PN-ACD-552
99369

Order #30
Industrial Energy Efficiency - Ukraine
November, 1997

REPORT
ON ENERGY AUDIT
AT *PROGRES* IRPIN COMBINED FACILITY
Irpin Town, UKRAINE

Prepared by

Mr Charles Fafard
Mr Valery Deineko
Mr Alexandr Silakin

Prepared for

United States Agency for International Development
Washington, D C 20523-1415

Burns and Roe Enterprises, Inc
1400 K Street NW Suite 1050 Washington D C 20005
Telephone 202 408 6831 Facsimile 202 408 6835

TABLE OF CONTENTS

1 0 EXECUTIVE SUMMARY **3**

1 1 INTRODUCTION 3
1 2 PRINCIPAL FINDINGS 3
1 3 RECOMMENDATIONS 4

2 0 GENERAL BACKGROUND **6**

2 1 HISTORY OF PLANT 6
2 2 TYPES OF PRODUCTS 7
2 3 NUMBER OF EMPLOYEES 7
2 4 NUMBER OF SIMILAR ENTERPRISES IN UKRAINE 8
2 5 SIGNIFICANCE OF THE SECTOR TO ECONOMY 8

3 0 CURRENT STATUS OF PRODUCTION **9**

3 1 TOTAL CAPACITY OF PLANT 9
3 2 REAL PRODUCTION CAPACITY OF PLANT 9
3 3 CURRENT TREND 11
3 4 EXPORT VS DOMESTIC PRODUCTION 12
3 5 BASIC ENERGY CONSUMING AREAS AND EQUIPMENT 12
3 6 BRIEF CHARACTERISTIC OF GAS CONSUMING EQUIPMENT 14
3 6 1 Kilns *14*
3 6 2 Basalt melting furnaces *16*
3 6 3 Boiler-house *16*

4 0 FINANCIAL STATUS OF PLANT **18**

4 1 CURRENCY VS BARTER 18
4 2 VIABILITY OF PLANT 18

5 0 ANNUAL ENERGY CONSUMPTION AND COSTS **19**

5 1 ANNUAL CONSUMPTION OF NATURAL GAS AND ELECTRIC POWER IN 1995, 1996 AND 1997 19
5 2 CURRENT TARIFFS ON ELECTRIC POWER AND FUEL IN 1997 21
5 3 STRUCTURE OF THE TOTAL ELECTRIC POWER CONSUMPTION AND ITS COST IN 1997 (10 MONTHS) 21
5 4 METERING CONSUMPTION OF NATURAL GAS AND ELECTRIC POWER 21

6 0 PREVIOUS ENERGY IMPROVEMENTS **23**

6 1 MEASURES AIMED AT DECREASING CONSUMPTION OF FUEL AND ENERGY RESOURCES IN 1997 THAT WERE IMPLEMENTED AT THE ENTERPRISE 23
6 2 A PLAN OF MEASURES DEVELOPED AT THE PLANT AND AIMED AT SAVING ENERGY RESOURCES 23

7 0 ENERGY AUDIT **24**

7 1 SPECIFIC ENERGY CONSUMPTION IN 1997 24
7 2 ENERGY CONSERVATION MEASURES WITH SHORT-TERM PAYBACK PERIODS 26

8 0 EFFECT OF IMPLEMENTING THE RECOMMENDATIONS ON ENVIRONMENT **31**

APPENDIX A ENERGY CONSERVATION OPPORTUNITIES

APPENDIX B SPECIFICATIONS FOR THE REQUIRED EQUIPMENT

APPENDIX C COLLECTED AND MEASURES DATA

APPENDIX D PHOTOGRAPHS OF THE PLANT

APPENDIX E DATA FROM THE MANUFACTURERS

APPENDIX F ABBREVIATIONS AND MEASUREMENT UNITS

1 EXECUTIVE SUMMARY

1 1 Introduction

This energy audit was performed in accordance with the program financed by the United States Agency for International Development (USAID) according to Delivery Order #30 The given project provides making energy audits at 24 industrial Ukrainian facilities The aim of the project id setting-up independent Ukrainian energy servicing companies (ESCOs) To implement the said task the company *Birns and Roe Enterprises, Inc* (General Contractor) invited Ukrainian engineers These specialists were taught to the methods of making energy audits in the USA and to the principles of organizing operation of ESCOs Making energy audits at industrial facilities contributed to practical preparation of ESCOs

Energy audit making included visiting for a week an enterprise by a group of engineers that usually consisted of two or three people So, one week was not enough for making a complete energy audit at the plant, as mainly large plants were chosen for making energy audits In many cases there occurred a necessity to focus the energy audit works on one processing line or on one plant department Hence, the given audit is based on what we really managed to do for a week Though the audit already includes a whole set of recommendations for the plant management, it is expedient to make a complete integral energy audit of the plant It is desirable that the plant management should invite specialists prepared within the framework of this project to continue the work, which must bring to improvement of the whole situation with energy consumption at the plant and to making the full list of the measures to be used to improve the energy consumption at the plant

1 2 Principal Findings

During November 17 to 21, 1997 a group of energy auditors performed an energy audit at the Open Joint-Stock company *"Irpin Combined Facility PROGRES"*

The basic products of OJSC "Progres" are bricks of *M75* and *M100* types, basalt belts and, on the basis of the latter ones, thermal insulating cardboard, mats, plates

The plant has its own main and ancillary production units providing a completed production cycle, but it has no its own sources of thermal energy supply

While making the audit, there were found a lot of attractive opportunities for improving the energy efficiency of the enterprise, both by improving the energy efficiency of the production, and at the cost of short-term measures (up to 1 year) that do not require large investments, and by implementing the middle-term measures (up to 2 years) that require capital investments

Implementation of the proposed measures without taking into account interaction of the projects will make it possible receiving the following savings

- saving of electric power - 494,500 kW h,
- saving of natural gas - 947,000 m^3

The costs on energy resources is USD 98,334 per year, providing that the costs of commissioning and implementation of the proposed measures are USD 78,963

At the same time the amount of emissions of harmful substances into the atmosphere (CO, SO_2, NO_x and ash) decreases by 18 9 tonnes per year

After choosing by the plant priorities concerning implementation of energy conservation opportunities (ECOs), when mailing financial estimations of the measures to be implemented, interaction of the projects should be taken into account

The plant has got reserves for further energy saving, their implementation will require a more detailed energy audit

1 3 Recommendations

The below table shows a list of energy conservation opportunities (ECOs) identified for the enterprise The table shows the estimated energy savings, the expected decrease in the costs and the simple paybacks for the proposed energy conservation opportunities

To encourage the facility to implement energy efficiency and energy conservation, USAID is contributing energy auditing equipment to the plant This equipment consists of standard energy auditing instrumentation and meters that will enable them to implement an energy saving activity This item is shown in the table as ECO #1 This recommendation is for the plant to implement an energy management section that would be responsible for recommending changes or improvements in any system that would result in energy savings

Typically, an energy management team or section would consist of the minimum of three persons, an engineering supervisor, an electric engineer and a thermal engineer The supervisor would be a part of the upper plant management, and should report directly to the plant management This is so that energy usage and energy are elevated in importance, and that the plant manager is aware of potential changes to save energy

The main directions concerning the energy conservation at the plant that are recommended after gaining the energy audit data as follows

- improvement of the combustion of natural gas (ECOs #2, 4, 7 and 9),
- improvement of the efficiency of utilisation of thermal energy (ECOs #5, 6 and 10),
- decreasing electric power consumption (ECOs #8 and 11),
- repairing the compressed gas leaks (ECO #3),

The measures with short payback periods (ECOs #1 to 9) are recommended for their implementation in the first order The issue of implementation of the other ones (ECOs #10, 11) should be considered when financial opportunities for that appear

Energy Conservation Opportunities (ECOs)

ECO	Description	Saving					Cost Energy saving, USD	Project costs, USD	Payback period, year
		Electric power, x 1,000 kW h	Natural gas, x 1,000 m³	Steam, GCal	Hot water, x 1,0³ m³	Water, x 10³ m³			
01	Introduction of an energy management program	245 5	270				32,230	30,446	0 9
02	Optimization of burning gas		147				12,226	8,000	0 7
03	Repairing gas leaks		147				12,226	2,000	0 2
04	Provision of the temperature mode in the kiln		53				4,407	3,000	0 7
05	Steam trap assembly for a heater in the heat supply system		34				2,790	2,512	0 9
06	Steam trap assembly for a heater in the hot water supply system		17				1,395	1,104	0 8
07	Instruments for monitoring and adjustment of the temperature mode in the kiln		216				17,895	16,005	0 9
08	Monitoring and optimization of the capacity of the motors	64					2,560	1,000	0 4
09	Monitoring of the state of the kiln lining		46				3,818	3,000	0 8
10	The hot water temperature controlling valve		17				1,395	1,696	1 3
11	Boiler speed-variable drivers	185					7,392	10,200	1 4
	Total	**494 5**	**947**				**98,334**	**78,963**	**0 8**

2 GENERAL BACKGROUND

Chairman of the Board Mr Valery Nikolayevich Rosstalnyi
Chief Energy Engineer Mr Valery Petrovich Beshentsev
Tel [38-04497]- 57139
Fax [38-04497]- 55336
Irpin PROGRES Brick Plant, 1 Dzerzhinsky Str , 252710, Irpin, Ukraine

2 1 History of Plant

The plant was commissioned in 1955 as a basic enterprise for construction works in Kyiv, and it was designed for production of 70,000,000 bricks per year The designer of the project was "UKRPROMPROJECT" Institute with the Ministry for the Construction Materials Industry

In 1968 a second workshop for production of basalt superthin fiber was commissioned

In 1972 Irpin Plant for Wall Materials Production was renamed into "PROGRES" Combined Facilities Plant

In 1975 the assortment of the products included 55 items

In 1975 and 1985 there were carried out reconstructions of the facilities in accordance with the project of the technological bureau with the Trust for the Industrial Construction Materials under Kyiv Municipal Executive Office There was built up a block of tunnel dryers including 9 tunnel dryers, the tunnels were made longer and the process of pushing the cars with brick was mechanized

The reconstruction resulted in the productivity level of the combined facilities reaching up to 94,958 thousand bricks per year

Since 1977 at "PROGRES" there has been operated a workshop for production of heat insulating cardboards on the basis of glass staple fibers from rocky raw materials

In 1982 at the combined facilities they started to sew heat insulating products that were used in tractor driver's cabs, and in 1986 - they started producing long heat insulating belts The latter can be used at temperatures up to 700^{0}C, which allowed to use them at Chornobyl NPP after the accident there

Brick production is done at 4 processing lines by plastic moulding spondyl clay and admixtured fire clay

In 1986 there were mechanized the processes of brick cutting and their loading into the tunnel dryers

The enterprise has

- 6 producing workshops
- a quarry

- a compressor station
- a boiler-house
- drinking and technical water pump stations
- other units

In January 1996 the enterprise was re-organized into the Open Joint-Stock Company "*PROGRES* Irpin Combined Facilities"

2 2 Types of products

Currently the enterprise has two main production lines a brick production line to produce M75 and M100-type bricks with the size of 250 x 120 x 65 mm, and a line for production of basalt belts as well as of heat insulating cardboards, mats and pieces on their basis

Table 2 1 Types of products and their percentage in the total sale

	1996		10 months in 1997	
Type of product	Quantity, hrn x 10^3	%	Quantity, hrn x 10^3	%
Brick	5,180 6	79	4,583 0	79 5
Basalt belts	899 0	14	921 2	16
Other products	460 8	7	259 5	4 5
TOTAL	6,540 4 ($ 3,535,350)	100	5,763 7 ($ 3,115,510)	100

NOTE US $1 = 1 85 hrn

2 3 Number of employees

The brick production line operates continuously, so the plant works in three shifts There total number of employees at the plant is 972, this includes

engineering personnel - 171 persons
main production workers - 662 persons
auxiliary production workers - 139 persons

The combined facilities have a completely finished production cycle and its own infrastructure

- a quarry for obtaining clay
- transportation means
- drinking and technical water pump stations

The combined facilities have a stable personnel, it is engaged in housing construction, it has a sanatorium for preventive treatment and a policlinic for the employees

2 4 Number of similar enterprises in Ukraine

PROGRES Combined Facilities are one of the largest enterprises in Ukraine There is a set of enterprises with the similar products Concerning brick production there are about 20 of them, concerning products on the basis of the basalt fiber - about 10 of those

2 5 Significance of the sector to economy

The main customer of the brick produced at the enterprise is "Kyivmiskbud" Joint-Stock Company providing about 60 per cent of the civil construction works in the city of Kyiv (the population is about 3 million people) The demand variation is of a seasonal character, but on the whole the product is quite sellable

Production of basalt belts is more dependent on the changes on the market, however, the high quality of the product guarantees demand for it on the domestic market of Ukraine both in the construction, and in the industrial branches

The given trend of the activities is prospective in the economy of Ukraine

3 CURRENT STATUS OF PRODUCTION

3 1 Total Capacity of Plant

Providing a continuous operation of 5 kilns, the total production capacity of the plant is 68,438 thousand bricks per year and 480 tons of basalt belts per year

3 2 Real production capacity of plant

Below there given tables sowing the brick and basalt belts production levels in 1995, 1996 and during 10 months in 1997

Table 3 1 Brick production rate in 1995, 1996 and 1997, thousands of bricks

Month	1995	1996	10 months in 1997
January	5,938	1,031	0
February	4,356	2,700	2,357
March	5,586	4,272	3,439
April	3,518	4,211	3,101
May	3,001	3,438	3,500
June	3,375	3,359	4,266
July	3,475	3,540	4,434
August	3,888	3,506	4,467
September	4,236	4,173	4,703
October	3,801	4,504	5,003
November	3,381	3,668	—
December	3,462	3,412	—
TOTAL during the year	48, 017	41,814	35,303
Monthly average	4,001	3,485	3,530

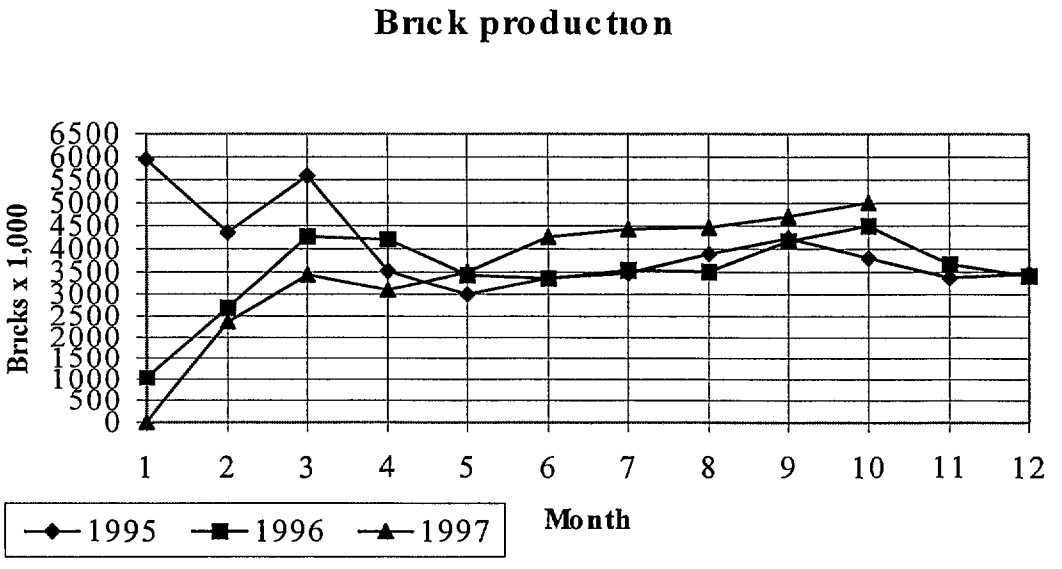

Fig 3 1

The largest drop in the brick production level was in 1996 In 1997 the brick production level rose and it is practically on the level of 1995 indicators, which is of about 66 to 70 per cent of the design production capacity of the plant The increase in the production level of 1996 is accounted for by spreading the construction scope in the city of Kyiv and by the increasing demand There are preconditions for stabilization of the production output on the level of 45,000 to 50,000 thousand bricks per year

The brick production varies seasonally declining in the production level in January and February is accounted for by a decrease in demand and by performing repair works on the processing equipment (kilns, dryers, etc) The enterprise has technical opportunities for increasing the production output up to the design value providing a sale market

Table 3 2 Rates of basalt belts production in 1995, 1996 and 1997, *tonnes*

Month	**1995**	**1996**	**10 months in 1997**
January	70 4	0	0
February	35 0	0	18 7
March	67 0	0	38 5
April	47 0	37 8	32 3
May	32 0	42 7	24 6
June	62 4	5 9	37 7
July	26 0	0	0
August	20 9	0	0
September	68 3	10 9	37 2
October	65 4	28 6	40 9
November	33 3	30 9	—
December	27 1	30 0	—
TOTAL during the year	554 8	186 8	230
Monthly average	46 2	15 6	23 0

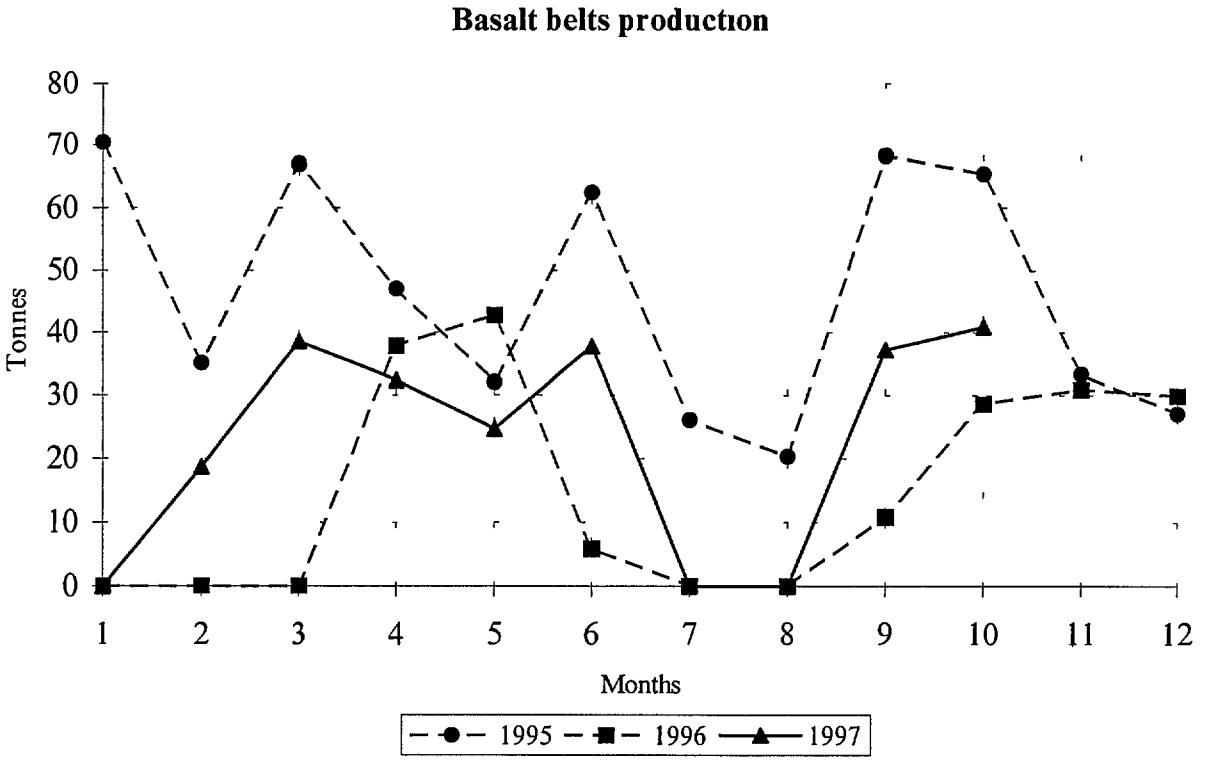

Fig 3 2

Basalt belts production is less stable than the brick production, which is accounted for by a noticeable instability of the demand for this sort of product

The level of production of basal belts decreased in 1996 as comparing it with that in 1995 by 66 per cent and was 187 tons, while in 1997 the production level started to increase In 1997 there is expected a production level of about 280 tons of basalt belts, which is 58 per cent of the installed capacity of the enterprise

The enterprise has a possibility to increase its production level to the designed one providing availability of a market

3 3 Current Trend

In the beginning of 1998 installation of a line for production of a face brick is planned with the capacity of 22 million bricks per year (the total cost is about DM 1 2 million)

There has been ordered a project for installation of a new equipment for a line for production of thin basalt fiber (the total cost of the equipment with the project cost and the installation works cost is about 200,000 hrn (≈ US $ 100,000), the expected decrease of the price on the basalt cardboard is from 446 hrn /m^3 to 300 - 320 hrn /m^3

Negotiations are in progress concerning credits for purchasing from the American Company "I C STEEL & SONS" a line for production of face brick (17 5 thousand bricks per hour, the cost is ≈ US $2,460,000), for production of dry plaster mixtures and for production of plastic pipe lines and fixture for water supply systems

3 4 Export vs Domestic production

The combined facilities products are almost completely sold on the domestic market of Ukraine in 1997 prices

Table 3 3

Product	Measure unit	Price
M75-type brick	1,000 bricks	125 3 hrn (US $67 7)
M100-type brick	1,000 bricks	141 7 hrn (US 76 6)
Empty inside brick	1,000 bricks	163 4 hrn (US $88 3)
Super thin basalt belts,	1 ton	2,650 hrn (US $1,432)
Basalt belts for construction works	1 ton	2,850 hrn (US $1,541)

NOTE US $1 = 1 85 hrn

The exports are 0 5 per cent of the sale on the results of the activities in 1997

3 5 Basic energy consuming areas and equipment

Table 3 3 Natural gas

Basic consumers during the 10 months in 1997	Amount of the consumed gas, m^3 x 1,000	%
Brick production line (tunnel kilns)	7,410	82
Basalt belts production line (basalt melting furnaces)	948	11
Boiler-house (DKVR-10/13 boilers, 3 units)	554	6
Other consumers	85	1
TOTAL	8,997	100

Basic consumers of natural gas during 10 months in 1997

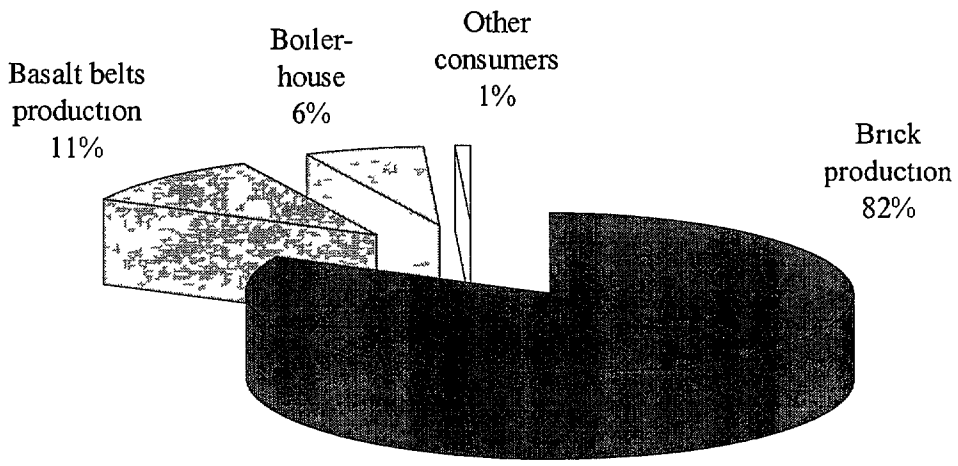

Fig 3 3

The basic consumers of natural gas that determine the efficiency of its use and have a potential for energy saving are the following ones the brick production line, the basalt belts production line and the boiler-house

Table 3 5 Electric power

Basic consumers during 10 months in 1997	Amount of electric power, kW h x 1,000	%
Brick production line (fans, cars, vacuum pumps)	3,770	46
Basalt fiber products production line (fans)	1,001 8	12 2
The compressor station (piston compressors - 5 units)	849	10 4
Basalt belts production line (fans, exhaust fans)	812	9 9
The boiler-house (pumps, fans, exhaust fans)	550	6 7
Pumps stations (pumps)	432	5 3
Other consumers	769 6	9 4
TOTAL	8,184 4	100

Basic electric power consumers during 10 months in 1997

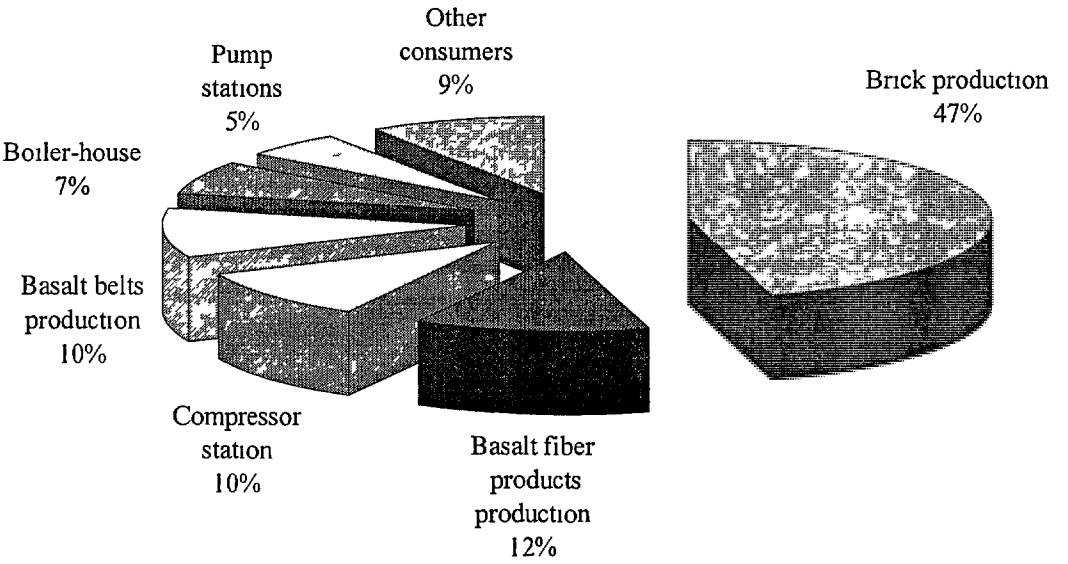

Fig 3 4

The basic consumers of the electric power that determine the efficiency of its use and have a potential for energy saving are the following ones the brick production line, the basalt belts production line, the compressor station and the boiler-house

Analysis of the consumption of natural gas and electric power by the basic production areas of the facility during the 10 months in 1997 showed that the brick production line consumes in average 82 per cent of natural gas and 47 per cent of the electric power of the total consumption by the facility The line for production of basalt and products on its basis consumes correspondingly 11 and 32 per cent

The specific weight of the energy cost in the net cost of the products in 1997 (10 months) was as follows bricks - 35 per cent, basalt belts - 39 per cents

3 6 Brief characteristic of gas consuming equipment

3 6 1 *Kilns*

The enterprise has 5 kilns of the tunnel type

- the length of the kiln — 102 2 m
- the width of the kiln — 4 1 m
- the height of the kiln — 3 85 m
- number of the entrances into the kilns — 32
- number of the gas burners — 22
- the gas pressure — 0,2 kgf/m^2
- the air pressure — 180 kgf/m^2
- the gas flow rate per burner — 14 to 16 m^3/hour
- the distance between the burners — 3 m

The maximum load of the kiln — 80,000 bricks
The maximum production level during 24 hours — 45,000 bricks

Each kiln is equipped with the following

- the blow air fans — 2 units
- the cooling fans — 1 unit
- the exhaust fans — 2 units

The average capacity of each kiln, depending on the electric motors provided for it - 93 kW The actual operation mode for each kiln - 37,500 bricks per 24 hours (83 %)

The hot air and some of the exhaust gases are used for drying bricks

The kiln operates 24 hours continuously round the year Every 96 minutes a process of "push-pulling" the cars with bricks to be fired is taking place that lasts 10 minutes Each car goes through Position 1 to Position 32 passing the Preparation Zone, Firing Zone and Cooling Zone for 51 2 hours The processing is very critical to observation of a thorough temperature and air dynamic conditions along the axis of the kiln, they must correspond to the charted processing schedule Breaking the processing schedule results in an increased amount of the wastes and in deterioration of the efficiency of the energy utilization

Temperature mode for firing in the tunnel kiln

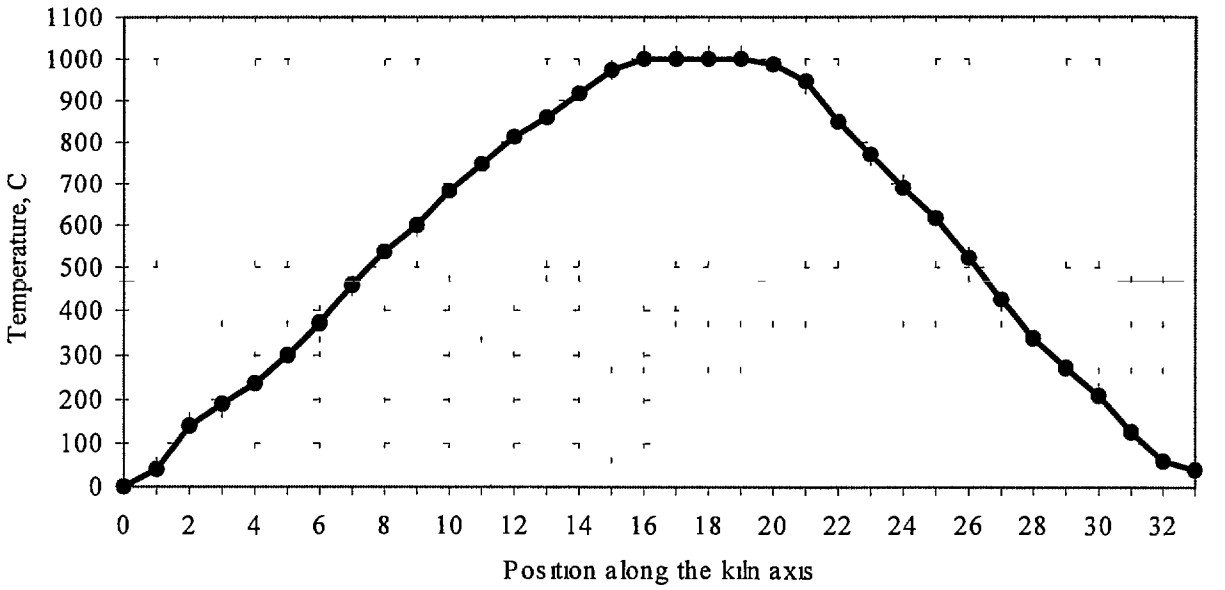

Fig 3 5

Aerodynamic schedule required in the tunnel kiln

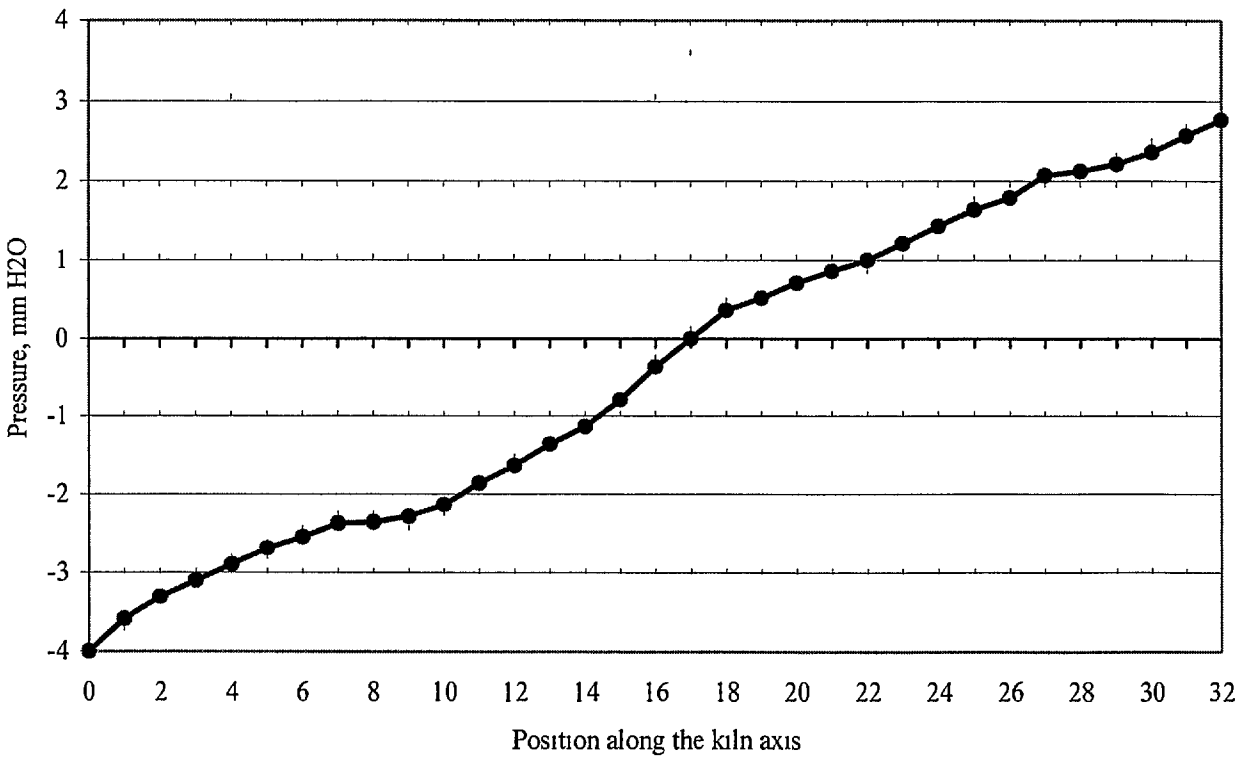

Fig 3 6

As it can be seen from the charts, the operation mode of the kiln is complicate and it requires a constant controlling of the temperature and pressure

3 6 2 *Basalt melting furnaces*

The enterprise has 4 plants for production of belts from basalt fiber, the production capacity is 15 kg/hour Each plant includes the following

- two furnaces for melting basalt
- a device for blowing-out the fiber

The gas pressure	— 0 27 to 0 3 barg
The air pressure	— 300 to 350 mm H_2O

After each furnace there is a recuperator to cool the exhaust gases and to heat the air supplied to the burners

To decrease the temperature of the gases supplied to the exhaust fan to 220°C after each recuperator there is an eject plant solving the exhaust gases and decreasing their temperature Removal of the gases from the furnace is fulfilled by a joint DN-9 exhaust fan with a 13-kW electric motor

3 6 3 *Boiler-house*

The source of heat supply for the combined facilities is their own boiler-plant operating on natural gas

Short characteristic of the boiler-house

• DKVR-10/13 steam boiler	— 2units
- steam production capacity	— 10 ton/hour
- the pressure of the saturated steam	— 13 barg
- efficiency (the designed value)	— 91 8 %
- the gas flow rate (calorific value net = 8,000 kcal/m^3)	— 770 m^3/hour
• DKVR-10/13 steam boiler being redesigned for the water heating operation mode	
- heat capacity	— 5 7 Gcal/hour
- the water temperature after the boiler	— 115°C
- the water temperature before the boiler	— 70°C

Each boiler is equipped with a DN-10 exhaust fan with a 22-kW electric motor, and with a VD-10 fan with a 22-kW electric motor

Analysis of operation of the boiler-house in 1997

There is no metering consumption of the steam produced by the boiler-house
The pressure of the steam produced by the boiler-house - 2 5 to 4 0 barg
The main steam consumers are as follows
- steam and water heaters in the heat supply system
- steam and water boilers in the hot water supply
-the processing lines (brick moulding, production lines of basal cardboard, basalt foam plastic, heat insulating materials, other consumers)

The boiler load varies significantly, depending on the season and on the processing needs, ranging from 2 0 to 6 0 ton/hour

Table 3 6

	January	February	June	October
Monthly gas consumption, m³	120,600	104,800	12,400	63,000
Gas consumption per hour, m³/hour	162	156	17	85
Average steam production capacity of the boiler per hour (the efficiency = 85 %, the steam pressure = 3 0 barg, the temperature of the feed water = =100 ⁰C), kg/hour	1,990	1,920	210	1,045
The pressure of the steam at the boiler output, barg	3 to 4	3 to 4	3 to 4	3 to 4
Utilization of the installation capacity of the boiler	20 %	19 %	2 %	10 5 %

The conclusion

The boiler steam capacity varies depending on the processing load from 250 kg/hour to 6,500 kg/hour

Gas consumption during 10 months in 1997 was 554,000 m³, which is equivalent to US $50,000, electric power consumption was 550,000 kW h, which is equivalent to US $24,200

Approximate steam consumption balance for 1997

1 Expected boiler-house gas consumption — 840,000 m³
2 Calculated annual steam production — 10,300 tonnes
3 Steam consumption by the processing lines (40 %) — 4,120 tonnes
4 Steam consumption by the hot water supply system (20 %) — 2,060 tonnes
5 Steam consumption by the heat supply system (40 %) — 4,120 tonnes

6 Average annual steam production capacity of the boiler-house
- per 24 hours — 28 2 tonnes
- per hour — 1,175 kg

7 Average steam pressure — 3 barg
8 Return of the condensate — 60 %

4 FINANCIAL STATUS OF PLANT

4 1 Currency vs Barter

The ratio of the operations in hard currency versus the barter-based ones is 54 6 per cent (due to the data for the 10 months in 1997)

4 2 Viability of plant

Due to the data of operation for 9 months in 1997

- profitability — 14 5 %
- indebtedness in payments for gas — 350,000 hrn

5 ANNUAL ENERGY CONSUMPTION AND COSTS

5 1 Annual consumption of natural gas and electric power in 1995, 1996 and 1997

Table 5 1

	Gas (m^3 x 1,000)			Electricity (kW h x 1,000)		
Month	**1995**	**1996**	**10 months in 1997**	**1995**	**1996**	**10 months in 1997**
January	1,794 6	4,34 3	131 4	1,839 8	582 4	2,94 0
February	1,262 1	768 5	758 1	1,360 3	785 4	833 5
March	1,509 4	1,048 5	935 5	1,338 3	1,048 5	1,049 3
April	961 6	973 6	819 1	1,017 9	935 1	827 3
May	663 1	883 6	972 4	724 9	747 9	728 7
June	933 3	792 0	1,035 8	1,057 6	683 9	966 7
July	880 1	783 6	925 6	979 5	624 2	664 5
August	949 4	779 9	1,022 1	953 4	600 7	695 9
September	1,214 3	1,056 1	1,163 8	1,198 1	792 3	989 0
October	1,078 8	1,096 6	1,233 6	1,277 1	924 2	10,135 5
November	991 2	971 8	—	1,250 6	1,005 1	—
December	1,093 4	990 5	—	1,083 7	941 2	—
TOTAL for the year	13,331 3	10,579	8,997	14,081	9,671	8,184 4
Monthly average	1,110 9	881 6	899 7	1,173 4	805 9	818 4
Cost, US $	1,106,498	878,057	746,751	563,240	386,840	327,376

NOTE 1,000 m^3 = US $83, 1,000 kW h = US $40

Annual consumption of natural gas

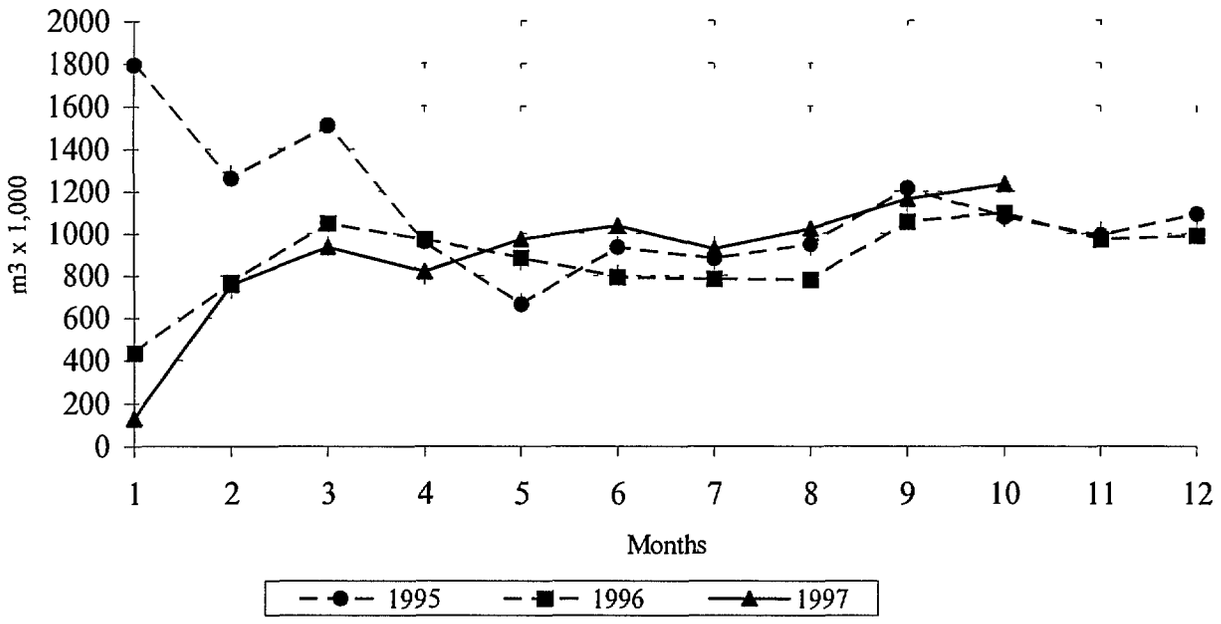

Fig 5 1

Annual electric power consumption

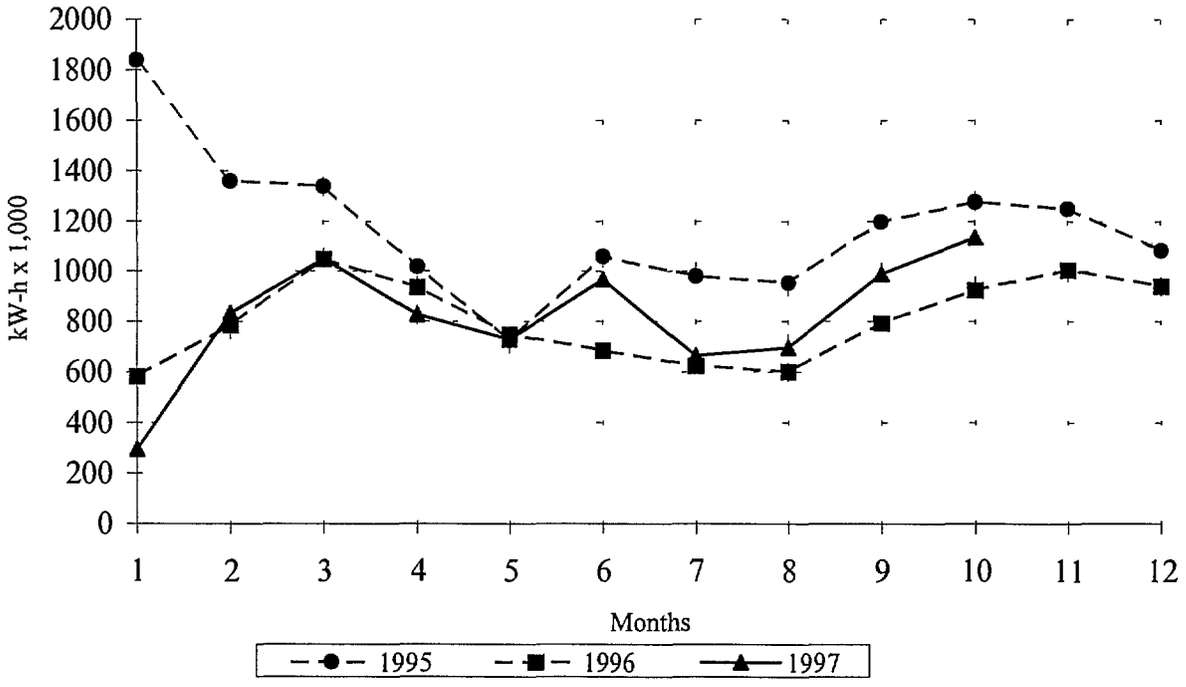

Fig 5 2

Seasonal variations in the products of the plant directly influences the electric power consumption So, the plot
of the natural gas consumption (Fig 5 1), as a matter of fact, is similar to the plot of the brick production (Fig 3 1)

The significant decrease in the consumption of natural gas and electric power in January and February in 1996 and 1997 is accounted for by the absence of the brick production in that period Some decline in the energy sources consumption in July 1997 is accounted for by the absence of basalt belts production in that period

Currently, due to rising of the brick production level typical for the autumn months during the analyzed period, a corresponding increase in the natural gas consumption is observed

The specific weight of the energy sources cost in the cost of the products in 1997 (10 months) was as follows brick production - 35 per cent, basalt belts production - 39 per cent

5 2 Current tariffs on electric power and fuel in 1997

1,000 m^3 of natural gas cost US $83 (without VAT)

The electric energy is delivered on a contract basis with the Ukrainian Energy Consortium represented by "ELECTROCONSULTING Ltd " Company according to the common contract tariff - US $0 04 per 1 kW h, including payment for the installed power (2,500 kW)

5 3 Structure of the total electric power consumption and its cost in 1997 (10 months)

PROGRES Open Joint-Stock Company utilizes for its production needs power energy and natural gas of the lowest calorific heat the average value of which is between 7,960 to 8,000 kcal/m^2

The structure of the power consumption, costs and the specific cost of 1Gcal of heat from the energy sources are shown in the table below

Table 5 2

Energy source	Consumption	Gcal	%	Cost, US $	%	Cost of 1 Gcal, US$/Gcal
Natural gas	8,997,000 m^3	71,976	91	746,751	70	10 4
Electricity	8,184,400 kW h	7,039	9	327,376	30	46 5
TOTAL	—	79,015	100	1,074,127	100	—

NOTE Data for calculations

1,000 m^3 = 8 0 Gcal 1,000 m^3 — US $83
1,000 kW h = 0 86 Gcal 1,000 kW h — US $40

5 4 Metering consumption of natural gas and electric power

The enterprise has fulfilled large work aimed at organization of commercial metering of natural gas and electric power consumption as well as at organization of the interplant metering the energy consumed by the main processing lines and equipment

This allows to introduce a system of controlling and planning the energy costs per unit of a product, as well as to assess the efficiency of the implemented energy saving measures

Metering the amount of the natural gas supplied to the plant is performed by a computer-based system working with narrowing devices

Metering the electric power energy supplied to the plant is performed by "Alpha" meters (USA) at the plant substations on the borders with the energy providing company

6 PREVIOUS ENERGY IMPROVEMENTS

6 1 Measures aimed at decreasing consumption of fuel and energy resources in 1997 that were implemented at the enterprise

1 There was installed a varied-speed drive for the peak pump of the drinking water (the electric motor capacity is 7 5 kW)

2 There was implemented a plant system of commercial metering the electric power sources on the basis of "Granite" automatic system There is no automatic interplant metering, but the daily metering of consumption of the electric energy resources is performed by reading the data from displays of the meters and entering them into the register with the following inputting the data into a computer This allows to analyze the current energy consumption and provide measures in case if the energy consumption does not correspond to the designed value

6 2 A plan of measures developed at the plant and aimed at saving energy resources

Main measures

- Improvement the efficiency of fuel combustion in kilns and boilers
  Fuel saving - 7 to 8 %
- Use of a utilizing boiler in the workshop for production of superthin basalt fiber
  Heat saving - 600 Gcal
- Installation of a frequency drive for controlling the revolution speed of the drinking and technical water pumps
- Electric power saving - 224,000 kW h/yr
- Heat insulation of the kilns at the brick production area and in the workshop for basalt fiber production
  Gas saving - 2 5 %
- Improvement of the operation modes of the fans for the kilns, drying furnaces, basal melting furnaces, etc
- Electric power saving - up to 10 %

The proposed measures are associated with the energy saving opportunities available at the plant, however, the expected economic effect from their implementation has an optimistic character if not being supported by proving calculations There are no calculations of costs of implementation of the proposed measures, which does not allow to estimate their payback period and to identify the most important quickly payback projects

7 ENERGY AUDIT

7 1 Specific energy consumption in 1997

At the enterprise there is metering the specific gas and electric power consumption per product unit The analysis shows that the specific energy consumption depends both on the production level, and of the technical status and as well on the operation mode of the similar equipment

Table 7 1 Comparison of the specific energy consumption per 1,000 bricks at different production levels

	Production level, bricks x 1,000	Specific heat consumption, Gcal/1,000 bricks	Specific electric power consumption, kW h/1,000 bricks
February 1997	2,357	1 92	136 3
October 1997	5,036	1 54	103 5
Average value for 10 months	35,303	1 68	106 8

Deviation of the specific consumption from the average value for gas - 23 %, for electric power - 31 %

Table 7 2 Comparison of specific gas consumption for firing 1,000 bricks in kilns # 1, 2, 3, 5 from 01 11 97 to 17 11 1997

Kiln	Production level, bricks x 1,000	Specific gas consumption, m3/1,000 bricks	Specific heat consumption, Gcal/ 1,000 bricks
Kiln #1	660 1	200	1 60
Kiln #2	660 1	177 6	1 42
Kiln #3	650 1	206 1	1 65
Kiln #5	650 1	214 9	1 71
Average value	650 1	199 7	1 6

Deviation of the specific heat consumption from the average value 18 %
1,000 m^3 of gas = 8 0 Gcal

Table 7 3 Specific energy consumption by the brick production line in 1997

Month	Production level, bricks x 10^3	Gas consumption		Specific gas consumption per 1,000 bricks		Electric power consumption, kW h x 10^3	Specific power consumption, kW h /10^3 bricks
		m^3 x 10^3	Gcal	m^3	Gcal		
January	—	—	—	—	—	12 0	—
February	2,357	566 2	4,530	240 2	1 92	321 3	136 3
March	3,439	701 8	5,614	204 1	1 63	402 1	116 9
April	3,101	648 7	5,190	209 2	1 67	340 6	110 0
May	3,500	798 0	6,384	228 0	1 82	360 6	103 0
June	4,266	869 3	6,954	203 8	1 63	456 5	107
July	4,434	912 1	7,297	205 6	1 65	455 9	102 8
August	4,467	938 3	7,506	210 1	1 68	436 6	97 8
September	4,703	1,006 6	8,053	214 0	1 71	463 5	98 6
October	5,036	969 4	7,755	192 5	1 54	521 0	103 5
TOTAL	3,5303	7,410 4	59,283	211 9	1 68	3,770 0	106 8

NOTE 1,000 m^3 of gas = 8 0 Gcal

Specific electric power consumption vs the production level

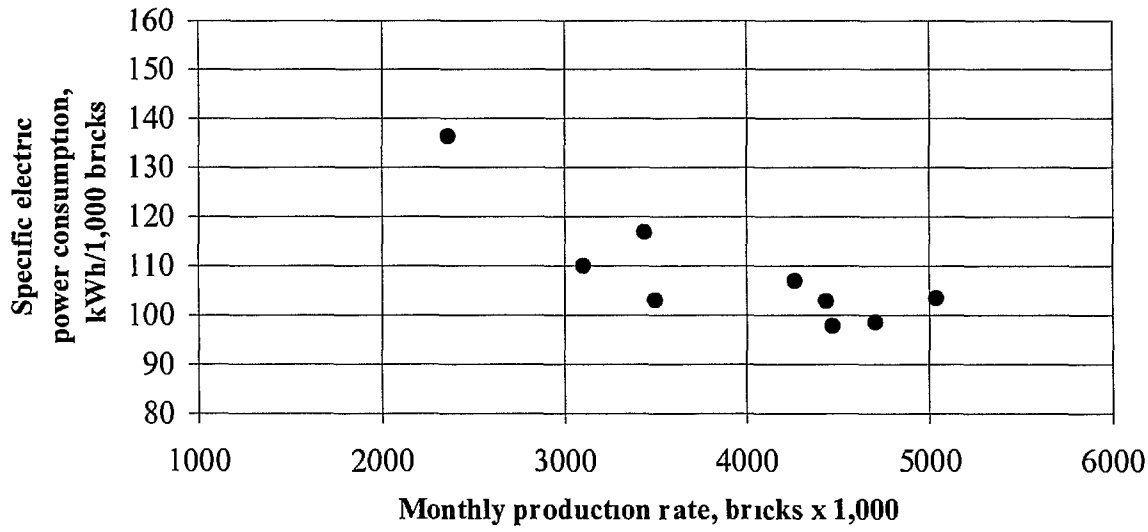

Fig 7 1

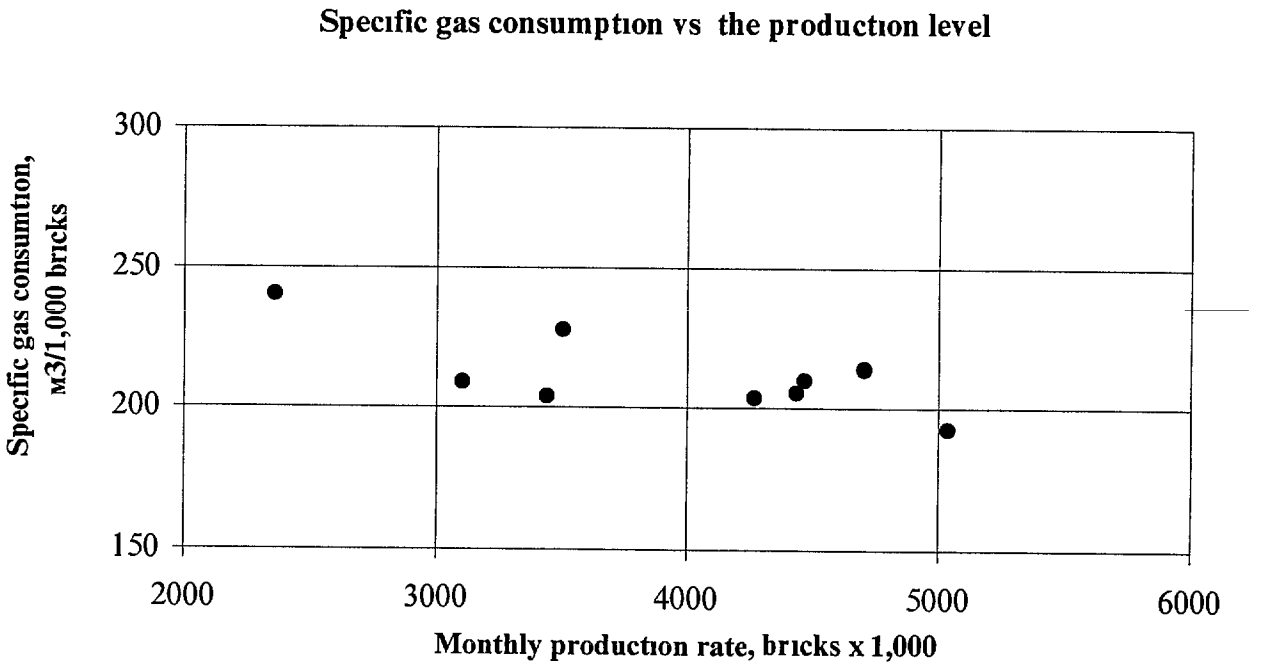

Fig 7 2

The specific electric power and gas consumption per 1,000 bricks depend on the production rate, on how well the processing schedule for firing bricks in kilns is observed, and they are basic indicators for assessment of the energy efficiency of the facility From the above given data one can conclude that there are good reserves for decreasing the energy consumption by loading the kilns to the utmost, implementing energy conserving opportunities, providing continuous control and analysis of the energy data

7 2 Energy conservation measures with short-term payback periods

Introduction of an energy management program **(ECO - 01)**

It is typical for industrial plant management to mainly think in terms of production, and to want to increase its output Therefore it is sometimes difficult to think of the importance of energy and energy costs on the operation of the plant

For *Progress* Irpin Combined Facilities, as with most industries in Ukraine, in the past the energy costs were significantly subsidized and plentiful, therefore and energy saving was not a major consideration in the plant operations

With the rising energy costs during the past few years, the energy costs have now become very influential part of the expenses

Currently at *Progress* Irpin Combined Facilities, like at other Ukrainian enterprises too, though the problems in relation of the energy resources and energy costs are now well understood by the staff, there is a tendency to think of implementing large projects with the intent of saving large amounts of energy by saving energy sources And at the same time at the facilities a large number of small energy saving projects exist that have short payback periods

Most industries in Ukraine have a person or persons who are referred to as energy engineers These people are typically responsible for ensuring that there is an adequate supply of energy to the plant, not to improve the energy efficiency of the plant But with the rise in energy prices and

the uncertainty of availability of all fuels, an energy manager to conserve energy becomes important Each plant should seriously consider establishing an energy manager position as a minimum, and for large industries, possibly even an energy management group

These people should be regularly monitoring all operations, and especially reviewing monthly energy consumption This monthly data should be graphed and compared to previous months and years to determine any variations in consumption Where variations due occur, they should then determine the cause of the variation and if remedial action is required For instance, if monthly consumption increases, the reasons why should be determined and if appropriate, steps taken to correct any problem

In addition, the energy management staff should also review each process, and look for energy saving opportunities They should see that all cost effective energy improvements are implemented, beginning with items identified in this energy audit They should then also have responsibility to review all proposed changes to the facility to ensure that each process is as energy efficient as possible

It is proposed to provide the enterprise with the required measuring instruments in order to identify and quantitatively estimate the energy conservation opportunities, independently determine the energy conservation opportunities, decrease energy consumption and keep under control energy saving

Expected saving	
- electric power	- 245,500 kW h,
- natural gas	- 270,000 m^2
Project costs	- USD 30,446
Payback period	- 11 months

Optimization of gas combustion **(ECO - 02)**

The combustion process is assessed at the plant visually, without analyzing gases in regard of the contents in them of O_2 and CO, the gas-to-air ratio is not supported

It is proposed to introduce at the enterprise into practice a portable combustion analyzer and to train a specialist who will be every day or every other day to make measures of the combustion efficiency and correspondingly adjust the optimal combustion mode

Expected annual gas saving	147,300 m^3
Project cost	US $8,000
Payback period	8 months

Identification and repairing natural gas leaks in the gas distributing lines **(ECO - 03)**

The internal gas distributing systems are branched and they have a large number of stop valves Due to an insufficient quality of the threaded and flanged connections the gas leak is 5 to 6 per cent

It is proposed to use at the plant a portable detector of gas-and-air mixture leaks, which will enable to carry out regularly (one or two times a week) checking the reliability of the threaded and flanged connections as well as the quality of the sealing fits and to eliminate the leaks in due time This will decrease the gas losses at the plant by 1 5 to 2 0 per cent

Expected annual gas saving	147,300 m^3
Project cost	US $2,000
Payback period	2 months

Optimization of the kiln temperature schedule **(ECO - 04)**

The operation of the kiln requires a thorough observation of the temperature schedule in the following zones the heating zone (30 m), firing zone (33 m), cooling zone (33 m) Breaking the schedule results in deterioration of the brick quality and increasing the percentage of the wastes At the plant there is no daily check of the temperature along the axis of the burners in the firing zone There are no controlling instruments

It is proposed for controlling the temperature along the length of the kilns to use a portable infrared thermometer with the temperature range up to 1,200^{0}C This will enable to make every 8 hours measurements and control the temperature schedule, which will decrease the level of the wastes by 10 per cent

Expected annual gas saving	53,100 m^3
Project cost	US $3,000
Payback period	8 months

Installation of a steam trap on the heater in the heat supply system **(ECO - 05)**

The steam and water heater in the water delivery system has no steam trap assembly, which results in steam flashing and deterioration of the heat operation efficiency

It is proposed to install a steam trapping assembly with a floating steam trap As it is known from practice, this measure will increase the efficiency of operating the heater by 10 to 15 per cent

Expected annual gas saving	33,600 m^3
Project cost	US $2,512
Payback period	11 months

Installation of a steam trap on the heater in the hot water supply system **(ECO - 06)**

The steam and water heater for hot water heating has no steam trapping assembly, which results in steam flashing and in deterioration of its operation efficiency

It is proposed to install a steam trapping assembly with a floating steam trap As it is known from practice, this measure will improve the efficiency of the heater operation by 10 to 15 per cent

Expected annual gas saving	16,800 m^3
Project cost	US $1,104
Payback period	10 months

Installation of instruments for the kiln operation mode adjustment and control **(ECO - 07)**

In the kilns there are burnt about 82 per cent of the natural gas consumed by the enterprise The operation mode of the kilns is characterized by a high specific gas consumption for firing 1,000 bricks and its significant variation in a wide range from 170 to 240 m^3/1,000 bricks

On the burners (22 in each kiln) there are no instruments for controlling the gas and air pressure, which does not allow to keep under control their optimal operation mode It is impossible to provide an even air and gas distribution in regard of the kiln sides, as there are no controlling valves in the air ducts

It is proposed to install on each burner and in the joint air- and gas ducts from both sides of the kiln instruments for controlling the air and gas pressure (correspondingly from 0 to 0 6 barg and from 0 to 300 mm H_2O) and controlling valves in the distributing air ducts from both sides in the firing zone At the same time there is proposed to install from the both sides of the kiln instruments for controlling the low pressure - the pressure along the axis of the tunnel - to optimize the air dynamic mode of the kiln operation, as well as to install thermometers for controlling the temperature of the sucked out gases and air

As it was shown from the experience of the practical adjustment works, the proposed measures will allow to optimize the load of the burners, control their adjustment, create conditions for setting the temperature and air dynamic modes both during the firing process, and in the periods of "pushing-out/pulling" the brick cars The expected decrease of the specific gas consumption per 1,000 bricks is 7 to 8 per cent

Expected annual gas saving	215,600 m^3
Project cost	US $ 16,005
Payback period	11 months

Monitoring and optimization of the electric motors capacity **(ECO - 08)**

The main power consuming equipment is electric drives of exhaust fans, fans, pumps While the enterprise has been operated for a long time (more than 40 years), the failed electric motors were replaced with no taking into consideration the minimum required power capacity Even for the similar equipment there are operated electric motors of different capacity that is more times higher than the required one

It is proposed to use at the enterprise a set of portable meters for metering power of electric motors - clamp on digital watt-meters - and a power factor meter The proposed measure will enable to carry out within 1 to 2 months monitoring of the real loading of the electric motors, to analyze the efficiency and to make a plan of their replacement with more powerful ones of a higher efficiency The electric power saving after implementation of the measure is not less than 1 per cent every year

Expected electric power saving	64,000 kW
Project cost	US $1,000
Payback period	5 months

Monitoring the kiln lining status **(ECO - 09)**

The data of the fulfilled measures showed high temperatures of the external surface of the kiln lining in the zone of location of the burners, their values amount to 190 to 207^{0}C This testifies to the lining failure and to increased losses into the environment which, due to estimation, is 3 5 per cent

As at the enterprise there are no exact data in regard of the state of the kiln lining, the attention paid to the lining repair and restoration in due time is insufficient

It is proposed to introduce into practice at the facility using a *Raynger ST6* portable infra-red thermometer This will enable to arrange at the enterprise a regular control (one or two times a day) of the temperature of the external surfaces of the linings of the kilns, linings of the gas ducts and steam ducts, as well as to identify the failed areas and fulfil in due time their repairing The results of the carried out measurements should be taken into consideration when making the schedule of the kiln repair works

Elimination of the increased temperatures in the firing zone by repairing the lining of the burners will enable to decrease the losses into the environment and improve the efficiency of the kilns by 0 3 to 0 5 per cent and, in the future to keep the heat losses in to the environment on the minimum level

Expected annual gas saving	46,000 m^3
Project cost	US $3,000
Payback period	10 months

Installation of the valve controlling temperature on the steam and water heater in the hot water supply system **(ECO - 10)**

Controlling the temperature of the hot water at the output of the steam and water heater in the hot water supply system is done at the enterprise manually

Taking into consideration a non-stable water consumption schedule, there is proposed to install in the steam duct to the heater a "direct activation" valve for automatical keeping the temperature of the hot

water As it is known from experience, implementation of this measure will give steam saving of not worse than 10 per cent

Expected annual gas saving	16,800 m^3
Project cost	US $1,696
Payback period	15 months

Installation of variable speed drives for the induced draught fan and the fan of DKVR-10/13 boiler **(ECO - 11)**

The enterprise boiler-house is equipped with two steam boilers with the maximum steam production capacity of 15 ton/hour each (the steam pressure up to 10 barg) Each boiler has an exhaust fan and a fan with the capacity of the electric motors of 22 kW each The steam load of the plant is provided by one boiler operating with the steam production capacity of 2 0 to 6 0 t/h The measurements of the consumed power showed availability of an opportunity to decrease the consumed power by 50 per cent

It is proposed to install at the boiler variable speed drives for the exhaust fan and for the fan with installation at the same time of the low pressure sensors for automatic keeping the required parameters This measure will enable to decrease the consumed power by 50 per cent, and in addition to decrease the total cost of the electric power consumption by 5 per cent resulting from introducing automatic controlling

Expected annual electric power saving	184,800 kW
Project cost	US $10,200
Payback period	17 months

8 0 EFFECT OF IMPLEMENTING THE RECOMMENDATIONS ON ENVIRONMENT

Saving energy resources is directly connected with decreasing the harmful emissions into the environment According to the data from received at the enterprise, there are set the following permitted levels of the emissions while burning 1,000 m^3 of gas for brick production and for basalt fiber production, these levels are regularly checked by an inspector from the regional environment protection administration

CO - carbon monoxide - 8 9 kg
No_x - oxides of nitrogen - 2 1 kg
SO_2 -sulphur dioxide - 0 032 kg

The average amount of the harmful emissions per 1,000 kW h of the produced electric power in 1996 according to the data from the Ministry of Energy of Ukraine was as follows

CO - 0 5 kg
No_x - 2 2 kg
SO_2 - 9 9 kg
Ash - 4 4 kg

Implementation of the proposed measures will enable to decrease the annual consumption of natural gas by 947,000 m^3 and that of the electric power - by 494,500 kW h, which is equivalent to decreasing the level of the harmful emissions into the atmosphere as follows

CO - 947,000 m^3 8 9 kg/10^3 m^3 + 494,500 kW h 0 5 kg/10^3 kW h = 8,676 kg
NO_x - 947,000 m^3 2 1 kg/10^3 m^3 + 494,500 kW h 2 2 kg/10^3 kW h = 3,077 kg
SO_2 - 947,000 m^3 0 032 kg/10^3 m^3 + 494,500 kW h 9 9 kg/10^3 kW h = 4,926 kg
Ash - 494 ,500 kW h 4 4 kg/10^3 kW h = 2,176 kg

The total decreasing of the harmful emissions - 18 9 tonnes per year

APPENDIX A ENERGY CONSERVATION OPPORTUNITIES

Energy Conservation Opportunities

ECO - 01	Introduction of an energy management program
ECO - 02	Optimization of gas combustion
ECO - 03	Identification and repairing natural gas leaks in the gas distributing lines
ECO - 04	Optimization of the temperature schedule in the kiln
ECO - 05	Installation of a steam trap on the heater in the heat supply system
ECO - 06	Installation of a steam trap on the heater in the hot water supply system
ECO - 07	Installation of instruments for the kiln operation mode adjustment and control
ECO - 08	Monitoring and optimization of the electric motors capacity
ECO - 09	Monitoring the kiln lining status
ECO - 10	Installation of the valve controlling temperature on the steam water heater in the hot water supply system
ECO - 11	Installation of variable speed drives for the exhaust fan and the fan for DKVR-10/13 b boiler

Energy Conservation Opportunities

ECO - 01 Introduction of an energy management program

Description of the opportunity

The basic instrument in decreasing energy consumption by using it more effectively is energy management Energy management is a management system based on fulfilling typical measurements and checkings providing such an operation of the plant when there is consumed only the amount of energy required for the processing needs The plant management I very well aware of the benefits given by the energy efficiency, but there are no technical facilities for quantitative assessment of financial advantages of the energy saving measures

While performing the audit there were found a lot of costless and low-cost energy saving opportunities that can become of a significant benefit

For example, estimation of the efficiency of operating the melting furnaces, fans and other equipment of the similar will allow to operate the most efficient equipment and to withdraw out of operation the inefficient one

Providing availability at the enterprise of a measuring system for a quantitative and qualitative assessment of energy saving opportunities, introduction of an energy management system is possible

It is proposed to provide for the enterprise the required measuring instrumentation to identify and quantitatively assess the energy saving opportunities, as well as independently determine the priority of the costs on energy saving and to decrease energy consumption and monitor energy saving

The set of the equipment that would be useful for the plant should include the following

- a combustion analyser
- a contactless thermometer
- a wire thermoanemometer
- a three-phase energy analyzer
- a tachometer
- a digital contact thermometer
- an illumination meter
- an ultrasonic contactless flow rate meter
- a power meter
- a power factor meter (cosφ)
- a portable thermometer/humidity meter/"dew point" meter,
- a computer with a printer

If a set of portable devices is available, there is proposed to introduce at the plant a position of the energy manager It is reasonable for the energy manager to undergo a special training course in the Energy Managers Training Center (Kyiv City, National Technical University of Ukraine "Kyiv Politechnical Institute") The basic task of the energy manger is monitoring of energy using systems, development of real rates with the aim of continuous monitoring for their observation by the energy users and decreasing the total energy consumption at the plant

The issues to be in charge of the energy manager work with the plant personnel should be included concerning the following aspects

- training the plant personnel to the energy management practice,
- stimulation of the plant personnel in finding energy conservation opportunities at their production areas and in their workshops,
- awarding the plant personnel for finding out potential energy conservation opportunities,
- quantitative estimation of the economic effect for each of the energy conservation opportunities and of the payback period for the corresponding investments,
- planning and correction of a 5-year strategy plan of the energy management development aimed at implementation of energy conservation opportunities,
- applying for allocation of funds for on energy saving projects,
- implementation of energy conservation opportunities if they are financed or costless,
- following-up of the energy conservation opportunities after their implementation and a quantitative assessment of the actual saving of the costs,
- dissemination of the successful experience of implemented energy conservation projects as well as their lessons,
- repetition of successful energy conservation projects at all production areas and in all workshops at the given plant

Calculation of a yearly saving of costs

The world experience and practice prove that implementation of an energy management system by using the above equipment can give a yearly energy saving between 2 and 3 per cent

The energy saving will be as follows

1 Electric power 818,000 kW h • 12 • 0 025 = 245,500 kW h
2 Natural gas 899,700 m^3 • 12 • 0 025 = 270,000 m^3

Calculation of a yearly saving of costs

1 If 1,000 kW h cost USD 40, the saving of the electric power cost will be
245,500 kW h • USD 40 = USD 9,820
2 If 1,000 m^3 cost USD 83, the saving on gas will be
270,000 m^3 • USD 83 = USD 22,410

The total saving of the energy costs will be
USD 9,820 + USD 22,410 = USD 32,230

Commissioning costs

The approximate cost of a set of the measuring instruments is USD 24,000
The costs of implementation of an energy management system, as it is shown by practice, are about 20 per cent of the expected saving, or USD 32,230 • 0 2 = USD 6,446

The total costs USD 24,000 + USD 6,446 = USD 30,446
The simple payback period USD 30,000 USD 32,230 = 0 9 year ≈ 11 months

ECO - 02 Optimization of gas combustion

Highly efficient combustion of gas in kilns, basalt melting furnaces and in the boilers require supporting an optimal gas-to-air ratio, its periodic checking and adjustment

The combustion process is assessed at the plant visually, without analyzing gases in regard of the contents in them of O_2 and CO that determine the fuel combustion efficiency

Scheduling the operation modes of DKVR-10/13 steam boiler #2 and that of kilns with the help of ENERAC-2000 combustion analyzer showed a real opportunity to gain 2 0 to 2 5 per cent saving of the gas supplied for burning

For example, at Steam Boiler #2 when the air pressure after the blow fan decreased from 20 to 10 mm H_2O, we managed to increase the efficiency by 2 6 per cent The content of the carbon oxide at the same time decreased from 376 to 24 mg/m^3

It is proposed to introduce at the plant into practice a portable combustion analyzer, to train a specialist who will have to measure the combustion efficiency every day or every other day and correspondingly adjust the combustion mode

Calculation of the expected fuel saving

1 Improvement of the equipment efficiency (set on the basis of measurements and from the practical experience) - 1 5 %
2 The average monthly gas consumption during 10 months in 1997 - 818,400 m^3
3 Annual gas consumption at the plant (12 months)
818,400 12 = 9,820,800 m^3
4 The expected annual gas saving
9,820,800 0 015 = 147,300 m^3
5 1,000 m^3 of gas cost US $83
6 Annual cost saving
147,300 m^3 $83 = US $12,226

Suggested equipment and its cost

The portable combustion analyzer ENERAC-2000 with sensors of O_2, CO, NO_x, SO_2 and with 12- and 48-inch sample-taking probes as well as with taking into consideration the transportation costs and the custom fees is about US $8,000

The simple payback period is $8,000 $ 12,226 = 0 65 yr ≅ 8 months

ECO - 03 Identification and repairing natural gas leaks in gas distributing lines

At the plant natural gas of the middle pressure of 0 2 to 0 3 barg is used in kilns and in the basalt melting furnaces, while gas of low pressure of 0 04 barg is used in the boiler-house

The internal gas distributing systems are branched and they have a large number of stop valves

For example, the kilns (5 units) are equipped with 110 burners, each of which has three stop valves with threaded connections, or, in other words, it is only the kilns that have 660 threaded connections in the middle-pressure gas pipelines

Taking into consideration the quality of the seals of the threaded connections and that of the flanged connections, the gas leaks, according to the estimates of the plant itself and in accordance with the experience, is 5 to 6 per cent The leaks are eliminated only in case of a strong smell of a gas with a typical odour, or due to the results of checking the quality of sealing by saponification of the connections, the latter being done once or twice a year

It is proposed to use at the plant a portable gas leak detector, which will enable to carry out regularly (one or two times a week) checking the reliability of the threaded and flanged connections, the quality of the sealed fitting and to eliminate in due time the leaks This will decrease the gas losses at the plant by 1 5 to 2 0 per cent

Calculation of the expected fuel saving

1 Gas consumption decrease	-	by 1 5%
2 Annual gas consumption	-	9,820,800 m^3

3 Expected annual gas saving

9,820 8 0 015 = 147,300 m^3

4 Annual costs saving

147,300 m^3 $83 = US $12,226

Suggested equipment and its cost

The cost of the portable gas and air mixture leaks detector with taking into consideration the transportation costs and other costs is about US $2,000

The simple payback period $2,000 $12,226 = 0 16 yr ≅ 2 months

ECO - 04 Optimization of the temperature schedule in the kiln

The operation mode in the tunnel kiln with the length of the active part of 96 m requires a thorough observation of the temperature schedule in three zones

- in the heating zone (30-m length) - from 30 to 70°C
- in the firing zone (33-m length) - from 700 to 1,020°C
- in the cooling zone (33-m length) - from 1,020 to 20°C

In each zone the temperature must be observed strictly according to the processing schedule
It takes 51 2 h for a car with bricks to go through all the zones The temperature schedule depends of the operation mode of each burner in the firing zone and the operation modes of the cooling fan and the exhaust fan

Breaking the schedule results in deterioration of the brick quality and increasing the percentage of the wastes The wastes after firing during 9 months in 1997 was 1,895,100 bricks or 5 4 per cent of the production level At the plant there is no daily checking the temperature along the axis of the burners in the firing zone There are no temperature controlling instruments

It is proposed for controlling the temperature along the length of the kilns to use a portable infrared thermometer with the temperature range up to 1,200°C This will enable to make every 8 hours measurements of and controlling the temperature schedule, which will decrease the level of the wastes by 10 per cent

Calculation of the expected fuel saving

1 Increase of the percentage of the wastes by	-	10%
2 The amount of the wastes during 9 months	-	1,895 thousand bricks
3 The annual amount of the wastes	-	1,895 (12 9) =2 527 thousand bricks
4 A decrease of the amount of the wastes	-	2,527 0 1 = 252 7 thousand bricks
5 Specific gas consumption for firing 1,000 bricks	-	210 m^3/1,000 bricks
6 Annual gas saving	-	252 7 210 = 53,100 bricks
7 Annual costs saving	-	53,100 m^3 $83 = US $4,407

Suggested equipment and its cost

The cost of the infra-red thermometer with the temperature range from 700 to 1,200°C with taking into consideration the transportation and other costs is US $3,000

The simple payback period $3,000 $4,407 = 0 7 yr ≅ 8 months

ECO - 05 Installation of a steam trap on the heater in the heat supply system

In the energy balance of the boiler-house the heating system consumes about 40 per cent of the gas consumed by the boiler-house The steam and water heater in the water delivery system has no steam trap, which significantly deteriorates the efficiency of operation of the heater and results in steam flashing with the condensate and its further secondary boiling

It is proposed to install a steam trapping assembly with a floating steam trap As it is known from practice, this measure will increase the efficiency of operating the heater by 10 to 15 per cent

Calculation of the expected fuel saving

1 Improvement of the heater efficiency (set) - 10%
2 Annual gas consumption at the boiler-house
(estimated on the basis of the data after working during 10 months in 1997) - 840 thousand m^3
3 The share of gas consumption for the heating system
(according to the energy balance for 1997) - 40%
4 Annual gas consumption for heating
840 0 4 = 336,000 m^3
5 Annual gas saving
336 0 1 = 33,600 m^3
6 Annual costs saving
33,600 m^3 $83 = US $2,790

Suggested equipment and its cost

The steam trapping assembly including the following equipment (Spirax Sarco)

- DN 50 Spirax Sarco FT 43 - 10 TV Steam Trap
Flanged BS 4504, PN 16, Cast Iron - US $1,150
- DN 50 Spirax Sarco Fig, 33, Strainer,
Flanged BS 4504, PN 16 with stainless screen 0 8 mm perforation - US $160
- DN 50 Spirax Sarco DCV wafer Check valve,
Stainless steel to fit between BS 4504 flanged - US $160
- Spares - US $100

TOTAL US $1,570

The total cost of the equipment with taking into account a 30-% addition for the transportation services, insurance and other additions
US $1,570 1 3 = US $2,041
Costs of the installation works (it is set as 30 per cent of the equipment cost)
US $1,570 0 3 = US $ 471
Total cost US $2,041 + US $471 = US $2,512
The simple payback period US $2,512 US $2,790 = 0 9 yr ≅ 11 months

ECO - 06 Installation of a steam trap on the heater in the hot water supply system

In the energy balance of the boiler-house the hot water supply system consumes about 20 per cent of the gas consumed by the boiler-house The steam and water heater for heating the hot water has no steam trap, which significantly deteriorates the efficiency of its operation and results in increased losses with the flashing steam

It is proposed to install a float steam trap As it is known from practice, this measure will improve the efficiency of the heater operation by 10 to 15 per cent

Calculation of the expected fuel saving

1 Improvement of the heater efficiency (set) - 10%
2 Annual gas consumption for hot water supply system
840 0 2 = 168, 000 m^3,

where 840,000 m^3 -the annual gas consumption by the boiler-house,
0 2 - the share in the gas consumption for the hot water supply line due to the energy balance of the plant for 1997
3 Annual gas saving 168 0 1 = 16,800 m^3
4 Costs decreasing 16,800 m^3 $83 = US $1,395

Suggested equipment and its cost

The steam trapping assembly including the following equipment (Spirax Sarco)

• DN Spirax Sarco FT 14 - 10 TV Steam Trap Flanged BS 4504, PN 16, SG Iron	-	US $440
• DN 25 Spirax Sarco Fig 33, Strainer, Flanged BS 4504, PN 16 with stainless screen 0 8 mm perforation	-	US $110
• Spirax Sarco DCV wafer Check valve, Stainless steel to fit between BS 4504 flanged	-	US 90
• Spares	-	US $50
TOTAL		US $690

The total cost of the equipment with taking into account a 30-% addition for the transportation services, insurance and other additions
US $690 1 3 = US $897
The installation works costs (set as 30 per cent of the equipment cost)
US $690 0 3 = US $207
Total costs US $897 + US $207 = US $1,104
The simple payback period US $1,104 US $1,395 = 0 8 yr ≅ 10 months

ECO - 07 Installation of instruments for the kiln operation mode adjustment and control

In the kilns there are burnt about 82 per cent of the natural gas consumed by the enterprise per year, which means 88 9 million m^3 costing US $739,000 The operation mode of the kilns is characterized by a high specific gas consumption for firing 1,000 bricks and its significant variation in a wide range from 170 to 240 m^3/1,000 bricks Varying of the characteristics for Kilns #2 and #5 is very large - ±18 per cent of the average value

It does not seem possible to control the optimal kiln operation mode, to carry out analysis and to determine the cause of the low operation efficiency of the kilns, which is accounted for by a complete lack of instruments for checking the pressure of the gas and air coming to the both sides of the firing zone, and to each burner The operation mode of the burners is assessed visually, the optimal gas-to-air ratio is not fixed by the readings from instruments

It is impossible to provide an even air and gas distribution in regard of the kiln sides, as there are no controlling valves and instruments for checking in the joint air and gas ducts

It is proposed to install on each burner and in the joint air-and-gas ducts from both sides of the kiln instruments for controlling the air and gas pressure (correspondingly from 0 to 0 6 barg and from 0 to 300 mm H_2O) and controlling valves in the distributing air ducts from both sides in the firing zone At the same time there is proposed to install from the both sides of the kiln instruments for controlling the low pressure - the pressure along the axis of the tunnel - to optimize the air dynamic mode of the kiln operation, as well as to install thermometers for controlling the temperature of the sucked out gases and air

As it was shown from the experience of the practical adjustment works, the proposed measures will allow to optimize the load of the burners, control their adjustment, create conditions for setting the temperature and air dynamic modes both during the firing process, and in the periods of "pushing-out/pulling" the brick cars The expected decrease of the specific gas consumption per 1,000 bricks is 7 to 8 per cent

Calculation of expected fuel saving

1 Decrease of the specific gas consumption
for firing 1,000 bricks (set) - 7 5 %
2 Average annual gas consumption
(on the data for 1997) - 210 m^3/1,000 bricks
3 Gas saving per 1,000 bricks
210 0 075 = 15 75 m^3/1,000 bricks
4 24-hour productivity of the kiln
(15 cars with 2,500 bricks each) - 37,500 bricks
5 Annual gas saving (365 days)
37,500 bricks 15 75 m^3/1,00 bricks 365 = 215,600 m^3
6 Cost saving
215,600 m^3 $83 = US $17,795

Suggested equipment and its cost

- Pressure gauges with a siphon and a crane,
0 to 0 6 barg, diameter of 100 mm - 24 units $80 = US $1,920
- Draught gauge
with the range of 0 to 2 5 kPa - 24 units $50 = US $1,200

- Draught gauge
  with the range of +12 5 to -12 5 mm H_2O - 10 units $50 = US $500
- Chromel - nickel thermometers
  the length is 1,000 mm (0 to 600°C) - 4 units $150 = US $600
- KSP-type automatic multi-point potentiometer - 1 unit $700 = US $700
- Air dampers, diameter of 350 mm - 2 units $500 = US $1,000

TOTAL US $5,920

The total cost of the equipment taking into account a 30-% adding for the transportation services, insurance and others

US $5,920 1 3 = US $7,696

The cost of the installation works (set as 30 per cent of the equipment cost)

US $7,696 0 3 = US $2,309

The cost of adjusting for setting the optimal operation mode of the kiln (set, with taking into account the VAT, as 20%) - US $6,000

The total costs US $7,696 + US $2,309 + US $6,000 = US $16,005

<u>The simple payback period</u> US $16,005 US $17,895 = 0 9 yr ≅ 11 months

ECO - 08 Monitoring and optimization of the electric motors capacity

The brick production line, basalt production lime and the boiler-house consume 65 per cent of the electric power, consumed annually by the enterprise, which is about 6,400,000 kW h and costs US $255,400 The main power consuming equipment is electric drives for the induced draught fans, fans, pumps While the enterprise has been operated for a long time (more than 40 years), the failed electric motors were replaced with no taking into consideration the minimum required power capacity Even for the similar equipment there use operated electric motors of different capacity that is more times higher than the required one

The installed capacity of the electric motors for fans at Kiln #5 is 103 kW, that at Kiln # 3 is 77 kW This is on condition that the kilns have the same technical characteristics The measurements carried out during the energy audit by means of a clamp-on digital watt-meter showed that the real load of the electric motors is 50 to 80 per cent of the installed power

It is proposed to use at the enterprise a set of portable electric motors power meters - clamp on digital watt-meters - and a power factor meter The proposed measures will enable to carry out within 1 to 2 months monitoring of the real loading of the electric motors, to analyze the efficiency and to make a plan of their replacement with more powerful ones with a higher efficiency The electric power saving after implementation of the measure is not less than 1 per cent every year

Calculation of expected electric power saving

1	Electric power saving (set)	-	1%
2	Annual electric power consumption by drives (according to the balance)	-	6,400,000 kW h
3	Expected annual electric power saving 6,400,000 kW h 0 1 = 64,000 kW h		
4	1 kW h costs	-	US $0 04
5	Cost saving 64,000 kW h x US $0 04 = US $2,560		

Suggested equipment and its cost

The cost of the portable instruments "2000A Wattprobe" and "Power Factor Meter, TIF 2300" with taking into account the transportation cost and other costs - US $1,000

The simple payback period US $1,000 US $2,560 = 0 4 yr ≅ 5 months

ECO - 09 Monitoring the kiln lining conditions

The measurements of the temperature of the external surface of the tunnel kilns #1, #2 and #5 carried out in the course of the energy audit in the location of the burners showed that the average temperature of the wall was as follows

Kiln #1 - 109°C
Kiln #2 - 130°C
Kiln #5 - 122°C

In some zones of the kilns the wall temperature achieved 190 to 207°C

This speaks of a failure of the lining and of increased heat losses into the environment

Calculation of the losses into the environment

- Heat stream by emitting through the lining
  (from a reference table) - 1,603 W/m^3
- The area of the cross-section of the emission
  in the firing zone
  33 m 2 1m = 66 m^2
- Energy losses during 24 hours
  66 m^2 1,603 W/m^2 24 = 2,539 kW = 2 54 MW
- Heat losses during 24 hours (1 MW = 0 86 Gcal)
  2 54 MW 0 86 = 2 2 Gcal
- Specific gas consumption per 1,000 bricks
  (actual data for 1997) - 210 m^3/1,000 bricks
- Gas consumption by the kiln during 24 hours
  37,500 bricks 210 m^3/1,000 bricks = 7,875 m^3
- Gas calorific value - 8,000 kcal/m^3
- Quantity of the heat brought into the kiln by the fuel
  7,875 m^3 8,000 kcal/m^3 = 63 10^6 kcal = 63 Gcal
- The percentage of the losses into the environment
  (2 2 6 3) 100 = 3 5%

There are no measurements of the lining temperature at the facility, so, due to absence of information, fulfilment in due time of repairing and restoration of the lining in the areas of the increased losses is not paid sufficient attention to

It is proposed to introduce into practice at the facility using a *Raynger ST6* portable infra-red thermometer This will enable to arrange at the enterprise a regular control (one or two times a day) of the temperature of the external surfaces of the linings of the kilns, linings of the gas ducts and steam ducts, as well as to identify the failed areas and fulfil in due time their repairing The results of the carried out measurements should be taken into consideration when making the schedule of the kiln repair works

Elimination of the increased temperatures in the firing zone by repairing the lining of the burners will enable to decrease the losses into the environment and improve the efficiency of the kilns by 0 3 to 0 5 per cent and, in the future to keep the heat losses in to the environment on the minimum level

Calculation of expected fuel saving

1 Improvement of the kiln efficiency (set) - 0 4%
2 Kiln production capacity during 24 hours - 37,500 bricks
3 Average specific gas consumption per 1,000 bricks - 210 m^3/1,000 bricks
4 Annual gas consumption by a kiln (365 days)
37,500 bricks 210 m^3/1,000 bricks 365 = 2,874,000 m^3
5 Expected annual gas saving at one kiln
2,874,000 m^3 0 004 = 11,500 m^3
6 Average number of the annually operated kilns - 4 kilns
7 Total expected annual gas saving
11,500 m^3 4 = 46,000 m^3
8 ',000 m^3 of gas cost US $83
9 Cost saving
46,000 m^3 $83 = US $3,818

Suggested equipment and its cost

The cost of a MIKRON M90-B"-type portable infrared thermometer, with taking into account the transportation cost and other costs - US $1,000
The cost of the repair works (set) - US $2,000
The total cost US $1,000 + US $2,000 = US $3,000

The simple payback period US $3,000 US $3,818 = 0 8 yr ≅ 10 months

ECO - 10 Installation of the valve controlling temperature on the steam and water heater in the hot water supply system

The steam and water heater in the hot water supply system is designed to heat water to the temperature of 60 to 65°C The operation mode is 24 hours a day all the year round The load depends on the consumption Periodical controlling of the steam consumption is performed manually

It is proposed to install in the steam duct to the heater a "direct activation" valve for automatical keeping the temperature of the hot water As it is known from experience, implementation of this measure will give steam saving of not worse than 10 per cent

Calculation of expected fuel saving

1	Steam consumption saving (set)	-	10%
2	The percentage of the annual gas consumption by the hot water heater (due to the energy balance)	-	20%
3	Annual gas consumption by the boiler-house	-	840,000 m³
4	Annual gas saving 840,000 m³ 0 2 0 1 = 16,800 m³		
5	Cost saving 16,800 m³ $83 = US $1,395		

Suggested equipment and its cost

• "Direct effect" valve DN 40 flanged BS 4504 Spirax Sarco KA33, Cast Iron, Normally open	-	US $325
• Spirax Sarc0 121 Control System temperature range 2 (40 - 105°C), having 2 m capillary and stainless steel pocket	-	US $615
• Trapping filter, DN 40 Spirax Sarco, Fig 33, Strainer, flanged BS 4504, PN 16	-	US $120
TOTAL		US $1,060

The total cost of the equipment with taking into account the transportation costs, insurance cost and other ones US $1,060 1 3 = US $1,378
The cost of the installation works (set as 30 per cent of the equipment cost)
US $1,060 0 3 = US $318
The total cost US $1,3178 + US $318 = US $1,696

The simple payback period US $1,696 US $1,395 = 1 2 yr ≅ 15 months

ECO - 11 Installation of variable speed drives for the exhaust fan and the fan for DKVR-10/13 boiler

In the boiler-house two steam boilers of DKVR-10/13-type are installed The maximum designed load of the boiler shall be 15 tons of steam per hour The boiler is equipped with a DN-10-type of induced draught fan and a VD-10 blowing fan with the capacity of the electric motors of 22 kW each and with the speed of 1,500 revolutions per minute

The actual load of the boiler varies between 2 0 and 6 0 tons per hour, or it is 15 to 40 % of the maximum load The air pressure and the low pressure in the furnace is controlled manually by adjusting the positions of the guiders of the fan system The overconsumption of the electric power is about 22 kW h

It is proposed to install at the boiler a varied-speed drive for the induced draught fan and for the fan with installation at the same time of a pressure and low pressure sensor for automatic keeping the required parameters This measure will enable to decrease the consumed power by 50 per cent and decrease the total cost of the electric power by 5 per cent by introducing automatic controlling

Calculation of expected fuel saving

1 Decrease of the consumed power
(due to the results of the measurements
and analysis of the air dynamic
characteristics of the exhaust fan and of the fan) - 22 kW
2 Improvement of the power capacity factor (automatic control) - 5%
3 Number of the annual boiler operation hours (set) - 8,000
4 Annual electric power saving
22 kW 8,000 1 05 = 184,800 kW
5 1 kW h of the electric power costs US $0 04
6 Cost saving
184,800 kW US $0 04 = US $7,392

Suggested equipment and its cost

- REN 22-type controlled drive, capacity 22 kW, with taking into account the services of designing the projects and the service maintenance (Kharkiv City, Ukraine) - US $3,950
- Pressure sensor and low pressure sensor - US $300

TOTAL cost of the equipment _____ US $4,250

The cost of the installation works (20 per cent of the equipment cost)
US $4,250 0 2 = US $850
The total cost per drive
US $4,250 + US $850 = US $5,100
The total cost of two drives
US $5,100 2 = US $10,200

The simple payback period US $10,200 US $7,392 = 1 4 yr ≅ 17 months

APPENDIX B SPECIFICATIONS FOR THE REQUIRED EQUIPMENT

ECO - 02

Portable Combustion Analyzer - 1 unit

Designation combustion analysis, determination of the combustion efficiency

Measurement Capacity	O_2, CO, NO_2, SO_2, Temperature
Calculation Capacity	Combustion efficiency
	CO_2 concentration
	Excess air ratio
Probes	12-inch and 48 inch
Output	Thermal printer in unit
Power supply	Rechargeable battery (220 V / 50 Hz)

Model **ENERAC 2000** from *Energy Efficiency Systems, Inc* or an equivalent

Approximate cost - **US $6,000**

Energy Efficiency Systems, Inc
1300 Shames Drive, Westbury, NX 11590, USA
Fax (516) 997-2129

or

Bacharach
625 Alpha Drive
Pittsburg, PA 15238, USA
Fax (412) 963-2640

or

Cosa Instrument Corporation
55 Oak Street
Norwood, NJ 07648, USA
Fax (201) 767-6804

ECO - 03

Portable Ultrasound Leak Detector - 1 unit

Destination detection of the natural and compressed air leaks in flange connectors, fittings, processing equipment

Power source A storage battery
220 V / 50 Hz rechargeable battery pack

Model EPD-500S kit from *EPD*, or an equivalent

Approximate cost **US $1,500**

EPD
14 Hayes Street, Elmford
New York 10523, USA
Fax (914) 347-2181

or

Superior Signal Company, Inc
PO Box 96 Spotswood, NY08884, USA
Tel (908) 251-0800
Fax (908) 251-9442

or

Davis Instruments
4701 Mount Hope Drive
Daltimore, MD 21215, USA
Fax (410) 358-0252

ECOs - 04, 10

Portable Thermometer for Non-Contact Temperature Measurement - 1 unit

Destination measuring the brick temperature in the kiln, the external temperature of the insulation of the stream and hot water pipe ducts, that of the electric contacts

Range	0 to 1,000 ^{0}C
Accuracy	± 0 5 % of the full scale
Resolution	1^{0}C
Power supply	A battery
Warranty	3 years
Option	220-V rechargeable battery pack
Warranty	2 to 3 years

Model DNS - 26XL1 Wahl Brand Infra-red Thermometer from *Wahl Instruments, Inc*, or an equivalent

Approximate cost **US $3,650**

Wahl Instruments, Inc
5750 Hannum Ave , Culver City
CA 90231, USA
Fax (310) 670-2840

or

Davis Instruments
4701 Mount Hope Drive
Daltimore, MD 21215, USA
Fax (410) 358-0252

or

"Termoprylad"
3 Naykova Street
Lviv, 290053, Ukraine
Fax (0322) 63-13-61

ECO - 05

Steam Trap Assembly - I unit

Destination removal of condensate from the steam and water tube heat exchanger

1 Float steam trap with an internal thermostatic air vent - 1 unit

- Inlet steam pressure (operation pressure) - 43 psig (3 barg)
- Return line pressure - 14 psig (1 barg)
- Enter condensate load - 6,000 lb/h (2,700 kg/h)
- Safety factor - 3
- Type of connection - PN16 Flange
- Flow direction - horizontal
- Material - iron, steel

2 Strainer - 1 unit

- Diameter - Due to the steam trap diameter
- Type of connection - PN16 Flange
- Screen - Stainless steel, 0 8 mm perforation
- Flow direction - horizontal
- Material - iron, steel

3 Check valve - 1 unit

- Diameter - Due to the steam trap diameter
- Connection - PN16 Flange
- Material - steel

4 Spare Parts

- Complete set of gaskets for the steam trap and strainer
- Strainer screen, 0 8 perforation

5 Stop valve - 2 units

- Diameter - Due to the diameter of the steam trap
- Material - iron
- Sealing - bellows type

Models from *Spirax Sarco*

- DN50 FT43 - 4 5TV Float Trap, flanged BS4504 PN16 with a thermostatic air, or an equivalent
- DN50 Fig 33 Strainer, flanged BS5404 PN16, or an equivalent
- DN50 DCV2 Wafer Check Valve for fitting between BS4504 PN16 flanged, or an equivalent

Model DN50 A2-type bellows sealed stop valve, flanged BS4504 PN16, or an equivalent

Approximate cost of the assembly **US $2,435**

Spirax Sarco, Inc
P O BOX 119 Allentown, PA 18105, USA
Fax (610) 433-1346

or

Armstrong International, Inc
816 Maple Street, P O 408, Three Rivers, Michigan 49093, USA
Fax (616) 278-6555

or

Institute for Technical Heat Engineering
within *National Academy of Sciences of Ukraine*
2-A Zhyliabov Street, Kyiv, 252057, Ukraine
Fax (044) 446-60-91

or

Joint Stock Venture *Krolivets Fitting Plant*
25 Franko Street, Krolivets Town
Sumy Region, 245060, Ukraine
Fax (05453) 9-71-04, 9-58-92

or

Joint Stock Venture *Slavhorod Fitting Plant*
Slavhorod Town,
Dnepropetrovsk Region, Sinelnikovo District
323130, Ukraine

ECO - 06

Steam Trap Assembly - 1 unit

Destination removal of condensate from the steam and water tube heat exchanger

1 Float steam trap with an internal thermostatic air vent - 1 unit

- Inlet steam pressure (operation pressure) - 43 psig (3 barg)
- Return line pressure - 14 psig (1 barg)
- Enter condensate load - 6,000 lb/h (2,700 kg/h)
- Safety factor - 3
- Type of connection - PN16 Flange
- Flow direction - horizontal
- Material - iron, steel

2 Strainer - 1 unit

- Diameter - Due to the steam trap diameter
- Type of connection - PN16 Flange
- Screen - stainless steel, 0 8 mm perforation
- Flow direction - horizontal
- Material - iron, steel

3 Check valve - 1 unit

- Diameter - Due to the steam trap diameter
- Type of connection - PN16Flange
- Material - steel

4 Spare Parts

- Complete set of gaskets for the steam trap and strainer
- Strainer screen, 0 8 perforation

5 Stop valve - 2 units

- Diameter - Due to the diameter of the steam trap
- Material - iron
- Sealing - bellows type

Models from *Spirax Sarco*

- DN40 FT43 - 4 5TV Float Trap, flanged BS4504 PN16 with a thermostatic air, or an equivalent
- DN40 Fig 33 Strainer, flanged BS5404 PN16, or an equivalent
- DN40 DCV2 Wafer Check Valve for fitting between BS4504 PN16 flanged, or an equivalent

Model DN40 A2-type bellows sealed stop valve, flanged BS4504 PN16, or an equivalent

Approximate cost of the assembly **US $1,940**

Spirox Sarco, Inc
P O BOX 119 Allentown, PA 18105, USA
Fax (610) 433-1346

or

Armstrong International, Inc
816 Maple Street, P O 408, Three Rivers
Michigan 49093, USA
Fax (616) 278-6555

or

Institute for Technical Heat Engineering
within *National Academy of Sciences of Ukraine*
2-A Zhyliabov Street, Kyiv, 252057, Ukraine
Fax (044) 446-60-91

or

Joint Stock Venture *Krolivets Fitting Plant*
25 Franko Street, Krolivets Town
Sumy Region, 245060, Ukraine
Fax (05453) 9-71-04, 9-58-92

or

Joint Stock Venture *Slavhorod Fitting Plant*
Slavhorod Town,
Dnepropetrovsk Region, Sinelnikovo District
323130, Ukraine

ECO - 07

Instruments for Pressure Measurements

Destination control of the parameters of the natural gas and air in the kiln

1 low-pressure commercial gauge
Range 0 to 2 5 kPa - 24 units

2 Differential low-pressure gauge (round)
Ranges -6 5 to +6 5 kgf/m^2 - 8 units
-25 to +25 kgf/m^2 - 2 units

3 Roll-up "U"-type tube liquid manometer
Range -150 to +150 mm H_2O - 2 units
-250 to +250 mm H_2O - 2 units

4 Ball Valve, threaded, ¼" (for manometers)

Models from *Davis Instruments*
- 1490 Model, 2 $^1/_4$" Dial, or an equivalent
- 2300 Model, 2302 Range Zero Center, or an equivalent
- Models 1211-12, 1211-24 or an equivalent

Approximate cost of the order **US $2,700**

Davis Instruments
4701 Mount Hope Drive
Daltimore, MD 21215, USA
Fax (410) 358-0252

or

Open Joint Stock Company *Promprylad*
23 Academician Sakharov Street
Ivano-Frankovsk, 284000, Ukraine
Fax (03422) 3-22-05

or

Open Joint Stock Company *Orgenerhoavtomatika*
19 Druzhby Narodov Street
Kyiv, 252042, Ukraine
Tel (044) 269-56-73

Instruments for Temperature Measurements

Destination measurements of temperature of the kiln outlet exhaust gases

1 TXA Thermoelectric converter with the protective fitting - 5 units
Range 0 to 600 °C
Length 400 to 500 mm

2 Potentiometer automatical, registering, multiport - 1 unit
Temperature measurement capacity - 0 to 600 °C
Measurement channels - 6

3 Compensating wire, Chromel - Alumel - 150 running meters

Approximate price of the order **US $1,255**

Controlling equipment

Destination controlling the flow rate of the gas and air supplied to the kiln burners

1 Rotating gas damper with *MEO*-10–25 Electric Actuator - 2 units
Tube diameter - DN 150
Gas pressure - 0 3 barg
2 Rotating air damper with *MEO*-10–25 Electric Actuator - 2 units
Air duct diameter - 400 mm
Air pressure - 250 mm H_2O

Approximate cost of the order **US $2,960**

Open Joint Stock Company *Orgenerhoavromatika*
19 Druzhby Narodov Street
Kyiv, 252042, Ukraine
Fax (044) 269-24-84

or

Energiya
35 Zaboishchiki Prospekt, Enakiyevo-6
Donetsk Region, 343820, Ukraine
Tel /fax (06252) 2-67-60

or

Joint Stock Company *Ukriotloservice*
10 Vorovsky, Donetsk,
340045, Ukraine
Fax (0622) 66-51-68

ECO - 08

Portable Digital Clamp-on Power Datalogger - 1 unit

Destination measurements of the power parameters for electric motors

Measurement Capacity

True Power	-	up to 1,000 kW
Apparent Power	-	up to 1,000 kVA
Power Factor	-	0 3 to 1
Peak Current	-	100 A
Peak Voltage	-	750 V
AC Current (40 to 400 Hz)	-	1,000 A
DC Current	-	1,000 A
AC Voltage (40 to 400 Hz)	-	750 V
DC Voltage	-	1,000 V

Model 382090 Clamp-On Power Meter, from *Davis Instruments*, or an equivalent

Approximate cost **US $680**

Davis Instruments
4701 Mount Hope Drive
Daltimore, MD 212215, USA
Fax (410) 358-0252

or

TIF Instruments, Inc
9101 N W 7th Avenue
Miami, Florida, 33150, USA

ECO - 09

Self-Acting Temperature Control System - 1 system

Destination temperature control behind the steam-and-water tube heat exchanger

1 Self-Active Control Valve, normally opened - 1 unit
- Coolant - saturated steam
- Inlet pressure - 43 to 57 psig (3 to 4 barg)
- Differential pressure on the valve - 4 psig (0 3 barg)
- Steam flow rate - 1,100 lb/h (500 kg/h)
- Type of connection - PN16 Flange
- Material - iron, steel
- Flow direction - horizontal,

2 Sensor /controller - 1 unit
- Heated medium - water
- Pressure - 43 to 70 psig (3 to 5 barg)
- Temperature controlling range - 50 to 70 °C

3 Strainer
- Diameter - due to the valve diameter
- Type of connection - PN16 Flange
- Screen - stainless steel, 0 8 perforation
- Flow direction - horizontal
- Material - iron, steel

4 Dial thermometer with a protective pocket - 1 unit
Temperature range 0 to 120 °C
Length 150 mm

5 Stop valves, bellows sealed - 2 units

Models from *Spirax Sarco*
DN40 KA33 flanged BS4504 PN16, normally opened, or an equivalent
121 Control System range 2 (40 to 105°C), or an equivalent
DN40 Fig 33 Strainer, flanged BS4504, PN16, or an equivalent
Dial thermometer, 0 to 120 °C, or an equivalent
DN40 A2 bellows sealed stop valve, flanged BS 4504 PN16, or an equivalent

Approximate cost of the system **US $1,900**

Spirax Sarco, Inc
P O BOX 119, Allentown
PA 18105, USA
Fax (610) 433-1346

or

Armstrong International, Inc
816 Maple Street, P O 408
Three Rivers, Michiganm
49093, USA
Fax (616) 278-6555

ECO - 11

Variable-Speed Drive - 2 Units

Destination control of the rotation speed of the boiler exhaust fan and air vent

Power capacity of an installed motor for	an exhaust fan	-	22 kW
	an air vent	-	22 kW
3-Phase power supply voltage		-	380 V
Frequency		-	50 Hz
Electric motor speed		-	1,500 rev /min/
Turn-out order fulfilment			

Approximate cost of the order **US $7,650**

***Sapfir 22DIV* Vacuum Transformer**

Destination automatic control of the vacuum conditions in the boiler furnace by varying the exhaust fan rotation speed

Output controlling signal	-	4 to 20 mA
Vacuum range	-	0 to 10 kgf/cm^2

Approximate cost **US $580**

Model *REN-22* from *Energozberihannia Consortium*, or an equivalent

Enerhozberezhennia
37 Inskrinskaya, Kharkiv
310005, Ukraine
Fax (0572) 44-01-43

or

Open Company *Fundament Ltd*, within *TRIOL Corporation*
2 Sumska Street, Kharkiv
310057, Ukraine
Fax (0572) 12-46-53, 12-72-07

or

ELMASH Research & Production Company
within *ABB- Ukraine*
Kyiv City, Ukraine
Tel (044) 441-26-66
Fax (044) 419-85-33

APPENDIX C COLLECTED AND MEASURES DATA

Scheduling the operation mode of DKVR - 10/13 Boiler on 11 18 97

SERIAL # 11003519
ENERAC MODEL 2000
COMBUSTION TEST RECORD

TIME 15 05 09
DATE 11/18/97

FUEL NATURAL GAS 21870 BTU/LB

COMBUSTION EFFICIENCY	75 3	%
AMBIENT TEMPERATURE	14	°C
STACK TEMPERATURE	176	°C
O2 GEN	12 5	%
CARBON MONOXIDE	270	MGM
CARBON DIOXIDE	04 3	%
COMBUSTIBLE GASES	0.00	%
STACK DRAFT (INCHES H2O	- 1 8	
EXCESS AIR	16	%
OXIDES of NITROGEN	3	MGM
SULFUR DIOXIDE	0	MGM
CARBON MONOXIDE ALARM	50	PPM

MODE MGM OXY_REF=TRUE%

The Main parameters after the boiler

SERIAL # 11003519
ENERAC MODEL 2000
COMBUSTION TEST RECORD

FOR STROJINDUSTRIA

TIME 15 16 24
DATE 11/18/97

FUEL NATURAL GAS 21370 BTU/LB

COMBUSTION EFFICIENCY	80 5	%
AMBIENT TEMPERATURE	5	°C
STACK TEMPERATURE	99	°C
O2 GEN	15 [illegible]	%
CARBON MONOXIDE	2[illegible]	MGM
CARBON DIOXIDE	[illegible]	%
COMBUSTIBLE GASES	0 [illegible]	%
STACK DRAFT (INCHES H2O	- 0 [illegible]	
EXCESS AIR	[illegible]	%
OXIDES of NITROGEN	3	MGM
SULFUR DIOXIDE	[illegible]	MGM
CARBON MONOXIDE ALARM	50	PPM

MODE MGM OXY_REF=TRUE%

The main parameters after the economizer

BEST AVAILABLE COPY

62

Scheduling the operation mode of DKVR - 10/13 Boiler on 11 19 97

BEST AVAILABLE COPY

```
SERIAL # 1100351 9
SERIAL # 1100351 9
  ENERAC MODEL 2000
     COMBUSTION TEST RECORD


TIME  14 49 19
DATE  11/19/97

FUEL  NATURAL GAS 21370 BTU/LB

COMBUSTION EFFICIENCY          76 0   %
AMBIENT TEMPERATURE              14   °C
STACK TEMPERATURE                 [illegible]   °C
O2 GEN                          [illegible] 9   %
CARBON MONOXIDE                 [illegible] MGM
CARBON DIOXIDE                  [illegible]   %
COMBUSTIBLE GASES               [illegible] 00   %
STACK DRAFT  INCHES -CO  -  0 5
EXCESS AIR                      [illegible]   %
OXIDES of NITROGEN                3 MGM
SULFUR DIOXIDE                    0 MGM
CARBON MONOXIDE ALARM            50 PPM

MODE MGM O2Y_REF=TRUE%
```

Mode#1 Operation mode The air pressure after the fan is 20 to 22 kg/m^2

```
SERIAL # 1.000519
  ENERAC MODEL 2000
     COMBUSTION TEST RECORD

 FOR  STROUDSBURG

TIME  14 54 00
DATE  11/19/97

FUEL  NATURAL GAS 21370 BTU/LB

COMBUSTION EFFICIENCY          76 6   %
AMBIENT TEMPERATURE               5   °C
STACK TEMPERATURE                [illegible]   °C
O2 GEN                          [illegible]   %
CARBON MONOXIDE                 [illegible]   MGM
CARBON DIOXIDE                  [illegible]   %
COMBUSTIBLE GASES               [illegible]   %
STACK DRAFT  INCHES -CO  -  [illegible]
EXCESS AIR                      [illegible]
OXIDES of NITROGEN              [illegible]   MGM
SULFUR DIOXIDE                    3 MGM
CARBON MONOXIDE ALARM            50 PPM

MODE MGM O2Y_REF=TRUE%
```

Mode #2 Decreasing the air pressure after the fan to 10 to 12 kg/m^2

Scheduling the operation mode in Kilns #2 and #5 on 11 21 97

```
SERIAL # 11003519
SERIAL # 11003519
  ENERAC MODEL 2000
     COMBUSTION TEST RECORD


TIME  10 34 03
DATE  11/21/97

FUEL  NATURAL GAS 21370 BTU/LB

COMBUSTION EFFICIENCY        64 8   %
AMBIENT TEMPERATURE             3  °C
STACK TEMPERATURE              62  °C
OXYGEN                       19 .   %
CARBON MONOXIDE                52 MGM
CARBON DIOXIDE               01 1   %
COMBUSTIBLE GASES            0 00   %
STACK DRAFT (INCHES H2O   -  0 6
EXCESS AIR                    918   %
OXIDES of NITROGEN              9 MGM
SULFUR DIOXIDE                  0 MGM
CARBON MONOXIDE ALARM          50 PPM

MODE MGM OXY_REF=TRUE%
```

Kiln #2 The parameters after the exhaust fan

```
SERIAL #   003519
SERIAL # 11003519
  ENERAC MODEL 2000
     COMBUSTION TEST RECORD

 FOR  STROJINDUSTRIA

TIME  10 4. 00
DATE  11/21/97

FUEL  NATURAL GAS 2.870 BTU/LB

COMBUSTION EFFICIENCY        61 7   %
AMBIENT TEMPERATURE             3  °C
STACK TEMPERATURE             1C.  °C
OXYGEN                        3 2   %
CARBON MONOXIDE                79 MGM
CARBON DIOXIDE               0. 6   %
COMBUSTIBLE GASES            0 00   %
STACK DRAFT (INCHES H2O   -  2 1
EXCESS AIR                    586   %
OXIDES of NITROGEN             14 MGM
SULFUR DIOXIDE                  0 MGM
CARBON MONOXIDE ALARM          50 PPM

MODE MGM OXY_REF=TRUE%
```

Kiln #5 The parameters after the exhaust fan

BEST AVAILABLE COPY

Data after measuring the temperature of the external wall of kilns #2 and #5 along the axis of the burners in the firing zone
(11 19 97 Instrument - Mikron M 90-B)

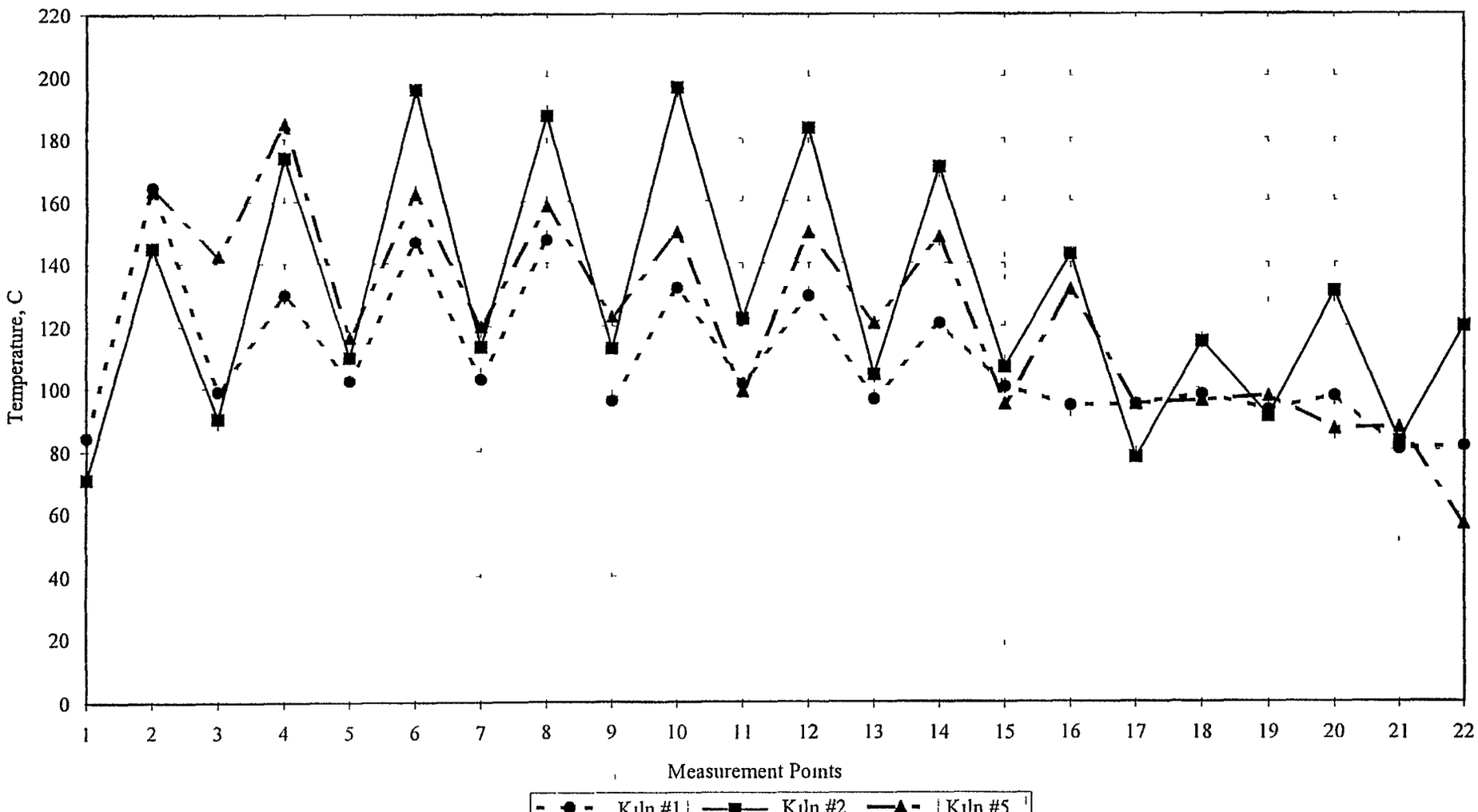

BEST AVAILABLE COPY

	печь 1	печь 2	печь 3	печь 4	печь 5	всего	БТК	тотальная	линейный участок	БСТВ	всего по комбинату	всего с начала месяца
1	7589	6826	7759	0	8435	30609	3121	5215	0	5330	44275	44275
2	7556	6754	7505	0	8490	30305	2997	5610	0	5339	44251	88526
3	7802	6709	7484	0	8442	30437	3154	6417	0	5480	45488	134014
4	7849	6570	7945	0	7942	30306	2631	6092	0	5326	44355	178369
5	7657	6547	7536	0	8111	29901	2885	3262	0	5208	41256	219625
6	7986	6914	7990	0	8005	30895	719	3055	0	5253	[illegible]	266160
7	8405	7127	8052	0	8652	32566	0	8840	0	5207	46613	345735
8	7795	6952	7922	0	8128	30797	0	3470	0	5308	39575	384463
9	7716	6811	7890	0	8076	30493	0	3190	0	5045	38728	423302
10	7778	6905	7834	0	8030	30577	0	3221	0	5041	38839	461531
11	7700	6704	7809	0	8063	30276	0	2712	159	5182	38329	499522
12	7310	7072	7691	0	8041	30114	0	2570	183	5024	37891	537783
13	7433	7025	8098	0	8207	30843	0	3094	211	5113	39261	578969
14	7820	7045	8069	0	8324	31258	0	3500	157	5271	40186	617604
15	7677	7032	8004	0	8080	30793	0	2439	0	5203	38435	656031
16	7637	7035	7914	0	8299	30885	0	2369	123	5245	38627	696509
17	8003	7187	8165	0	8326	31681	0	3033	160	5299	40478	696509
18	0	0	0	0	0	0	0	0	0	0	0	696509
19	0	0	0	0	0	0	0	0	0	0	0	696509
20	0	0	0	0	0	0	0	0	0	0	0	696509
21	0	0	0	0	0	0	0	0	0	0	0	696509
22	0	0	0	0	0	0	0	0	0	0	0	696509
23	0	0	0	0	0	0	0	0	0	0	0	696509
24	0	0	0	0	0	0	0	0	0	0	0	696509
25	0	0	0	0	0	0	0	0	0	0	0	696509
26	0	0	0	0	0	0	0	0	0	0	0	696509
27	0	0	0	0	0	0	0	0	0	0	0	696509
28	0	0	0	0	0	0	0	0	0	0	0	696509
29	0	0	0	0	0	0	0	0	0	0	0	696509
30	0	0	0	0	0	0	0	0	0	0	0	696509
31	0	0	0	0	0	0	0	0	0	0	0	696509
[illegible]	1E+05	17245	340 7	0	205681	522736	15507	68394	993	88874	696509	696509

BEST AVAILABLE COPY

APPENDIX D PHOTOGRAPHS OF THE PLANT

Ирпенский завод "Прогрес" Административное здание
Progres Irpin Combined Facility - Administration Building

Эксперты B&R В Дейнеко и Д Крамаренко проводят анализ дымовых газов после обжиговой печи прибором ENERAK 2000
Mr Deyneko and Mr Kramarenko, B&R experts, are analyzing the exhaust gases content after the kiln by means of ENERAC 2000

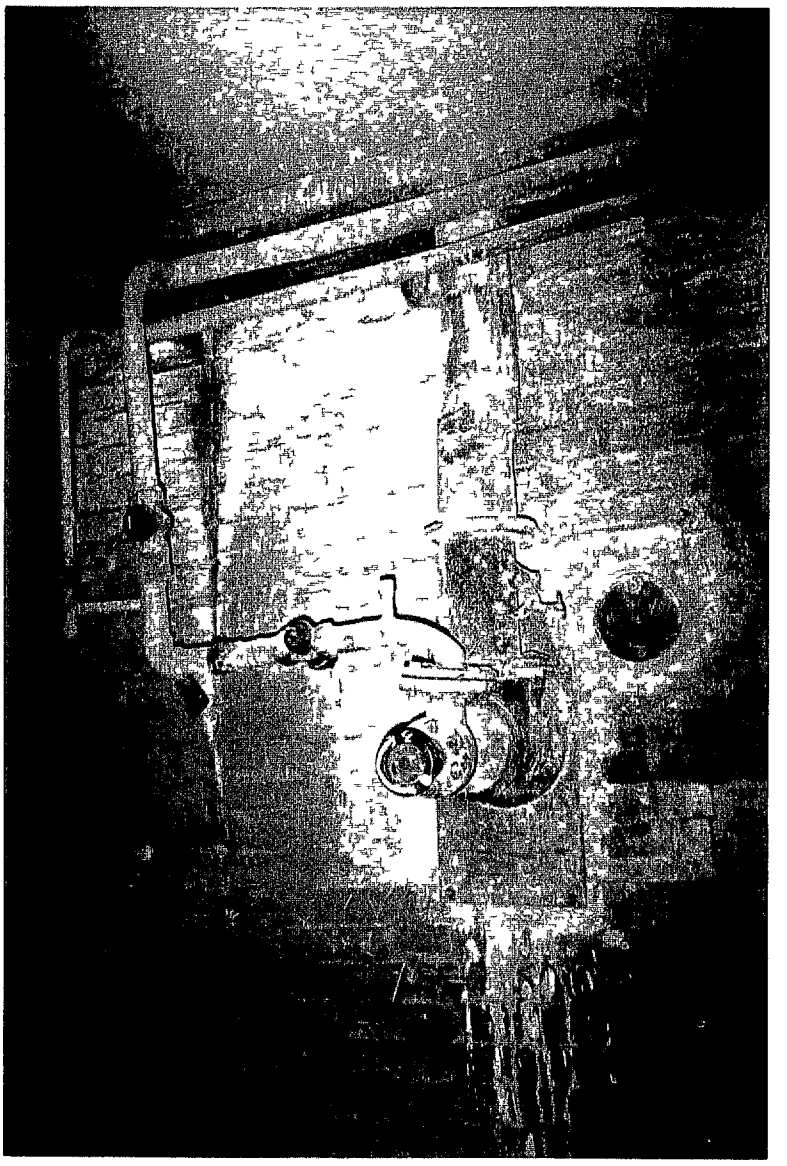

Газовая горелка обжиговой печи
A kiln gas burner

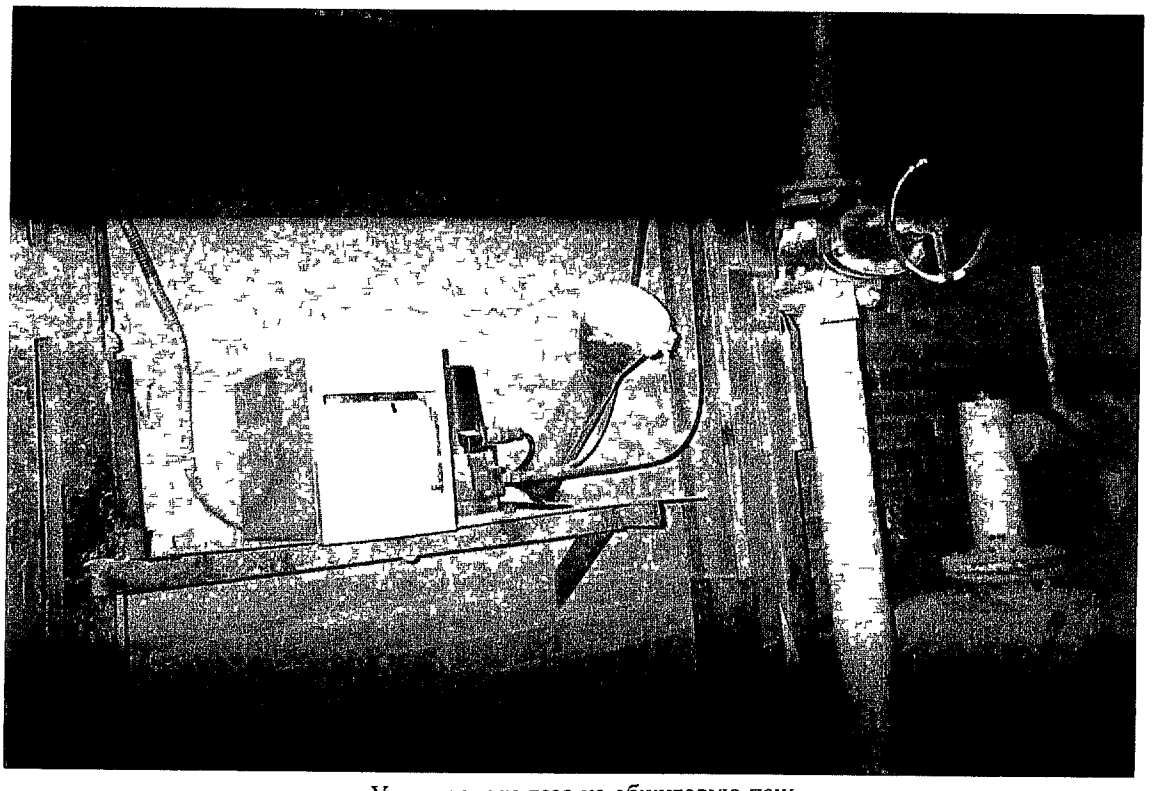

Учет расхода газа на обжиговую печь
Metering gas flow at a kiln

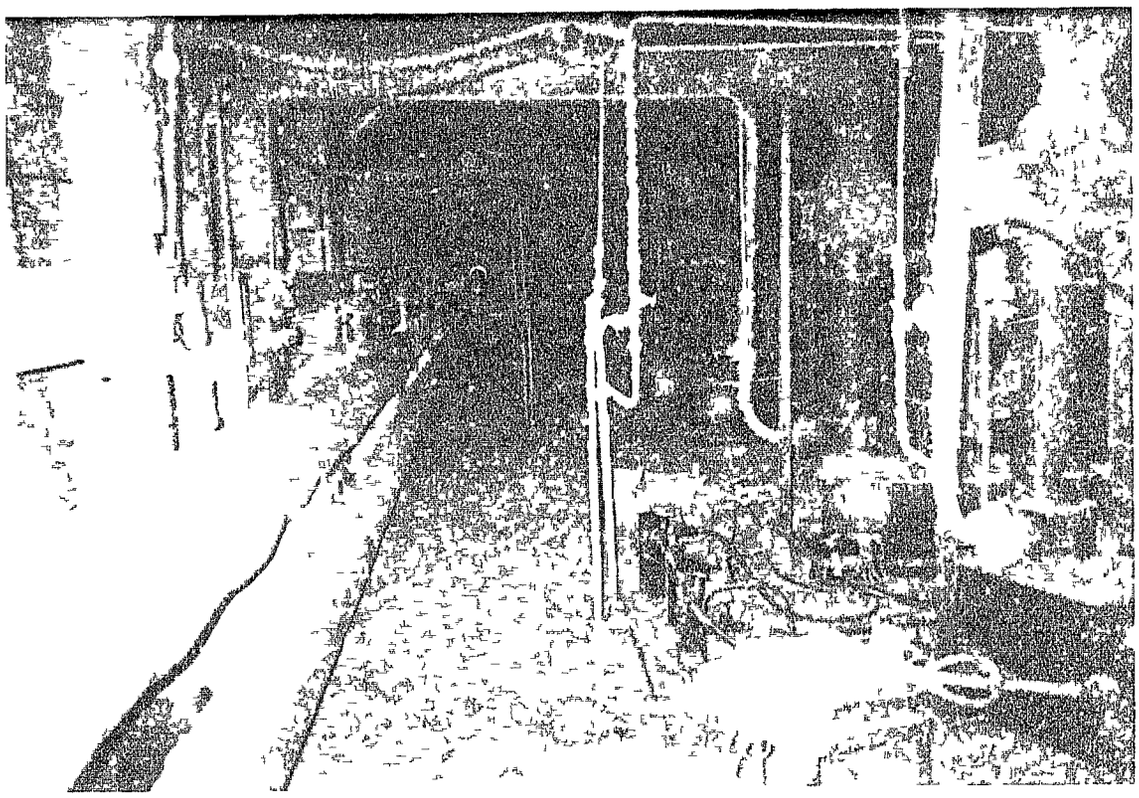

Цех производства базальтовых холстов
Basalt Wool Production Unit General view

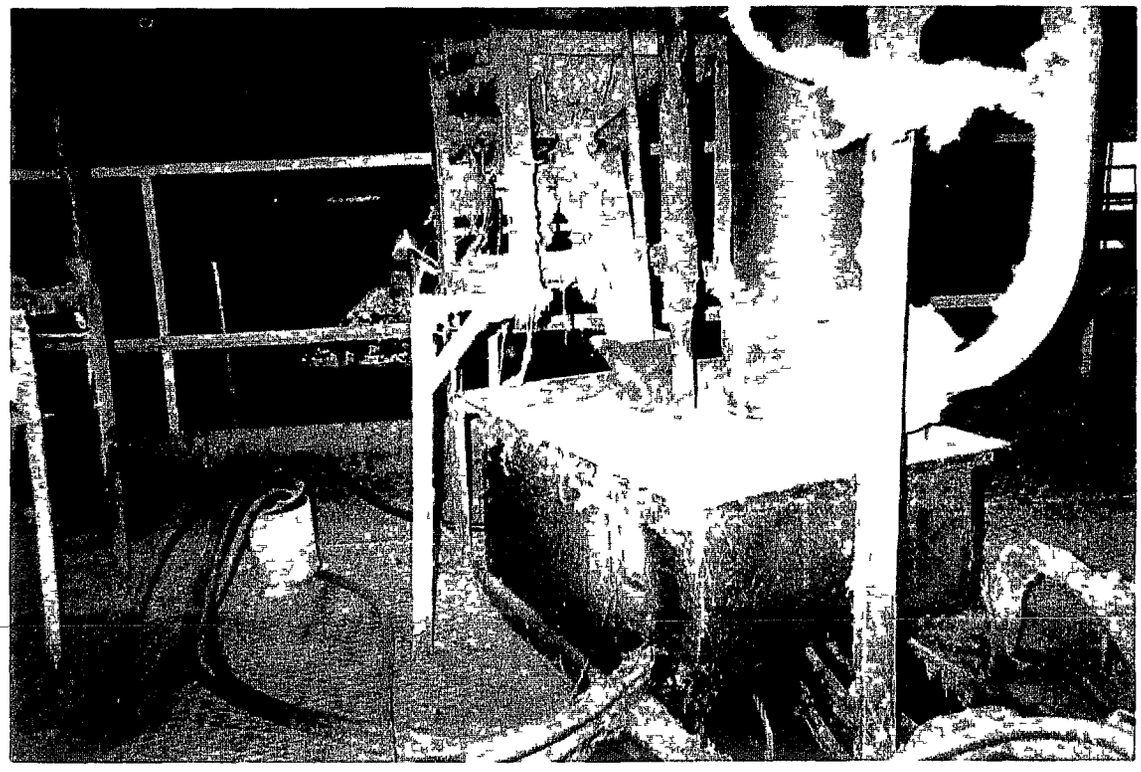

Печь плавления базальта
Basalt Melting Furnace

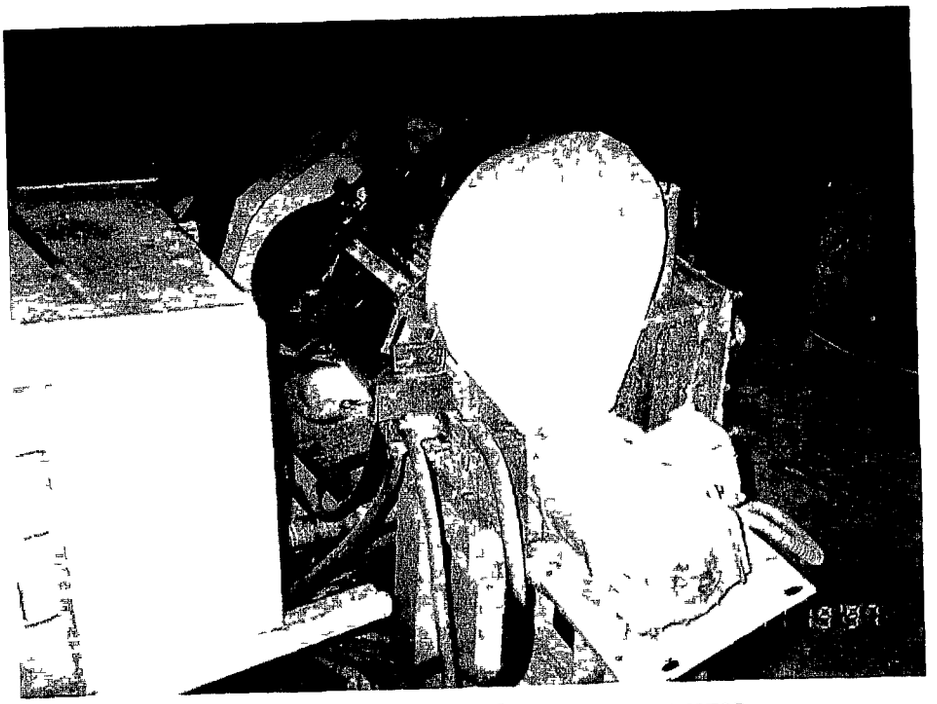

Установка производства базальтовых холстов
Basalt wool production unit

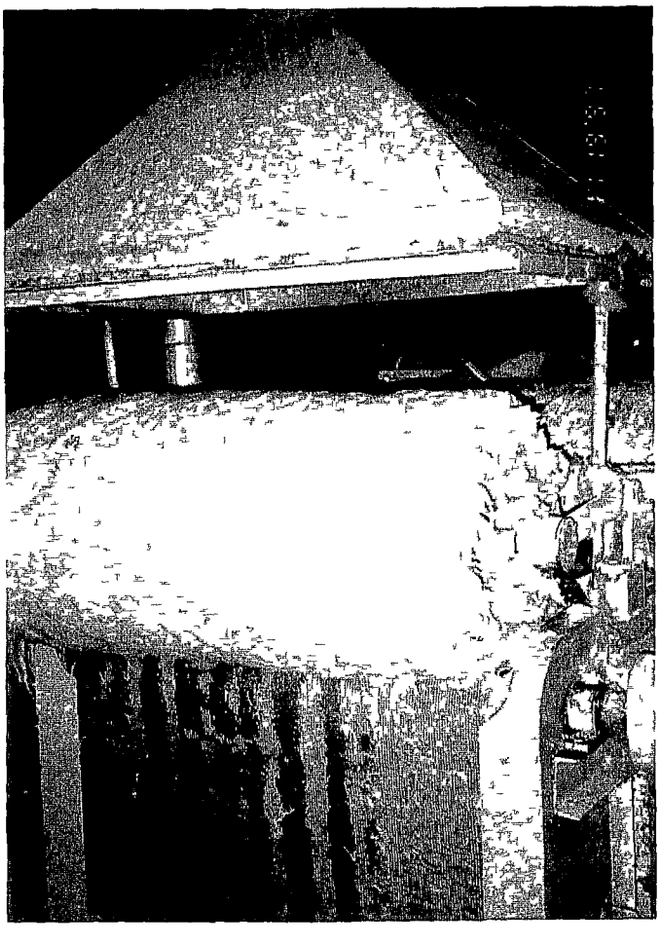

Базальтовые холсты
Basalt wool

Тележка обжиговой печи
Kiln buck-druck

Вытяжные вентиляторы сушильных камер
Exhaust fans in the drying chambers

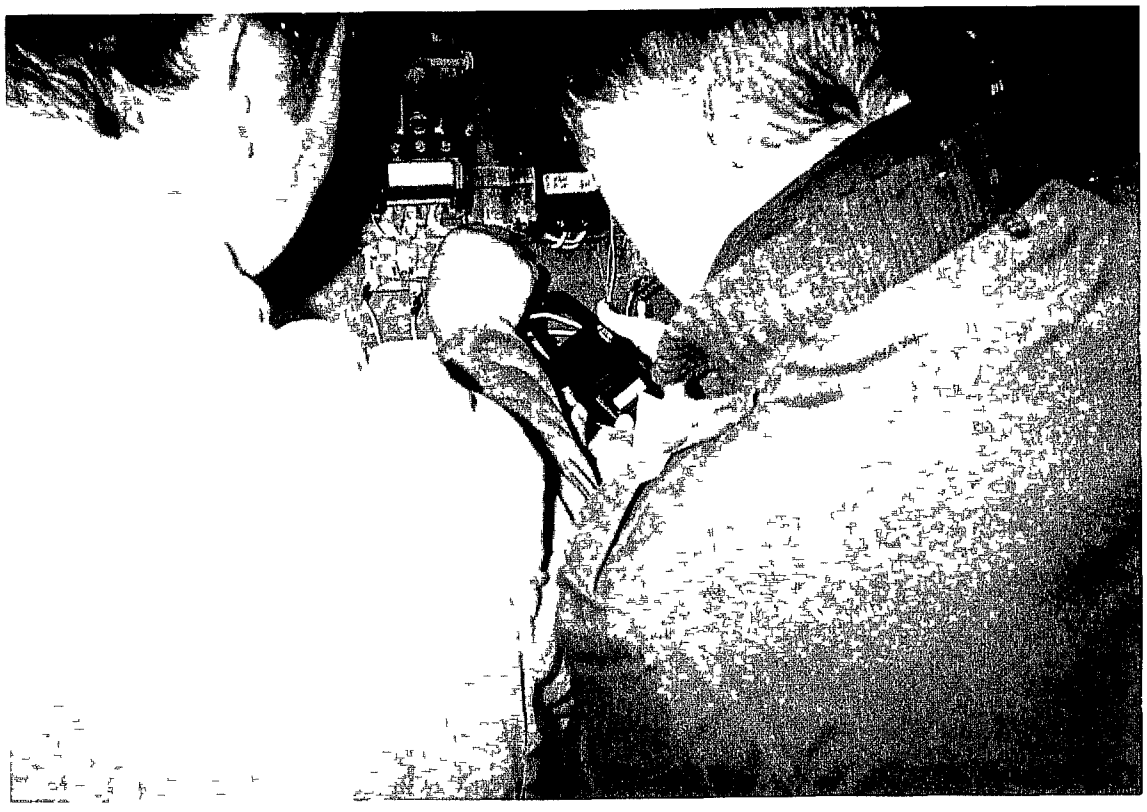

Эксперт B&R А Силакин проводит замер мощности потребляемой электродвигателем вентилятора
Mr A Sylakin, a B&R expert is measuring the electric power consumption by the fan motor

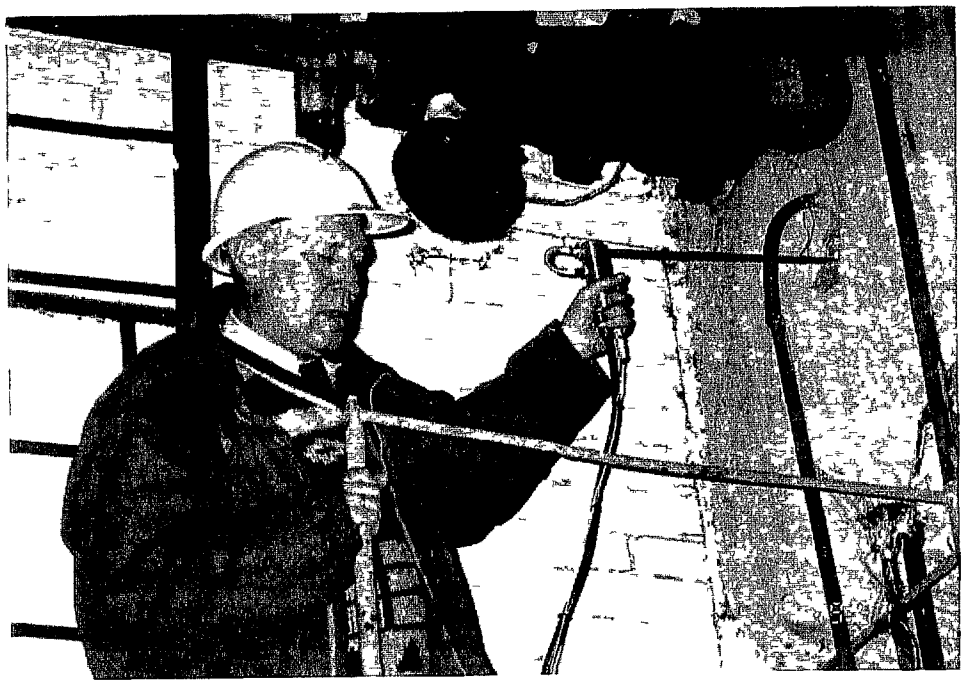

Эксперт B&R В Дейнеко проводит измерения показателей режима горения котла прибором ENERAK 2000
Mr V Deyneko B&R expert, is measuring the boiler combustion mode parameters by ENERAC 2000 instrument

APPENDIX E DATA FROM THE MANUFACTURERS

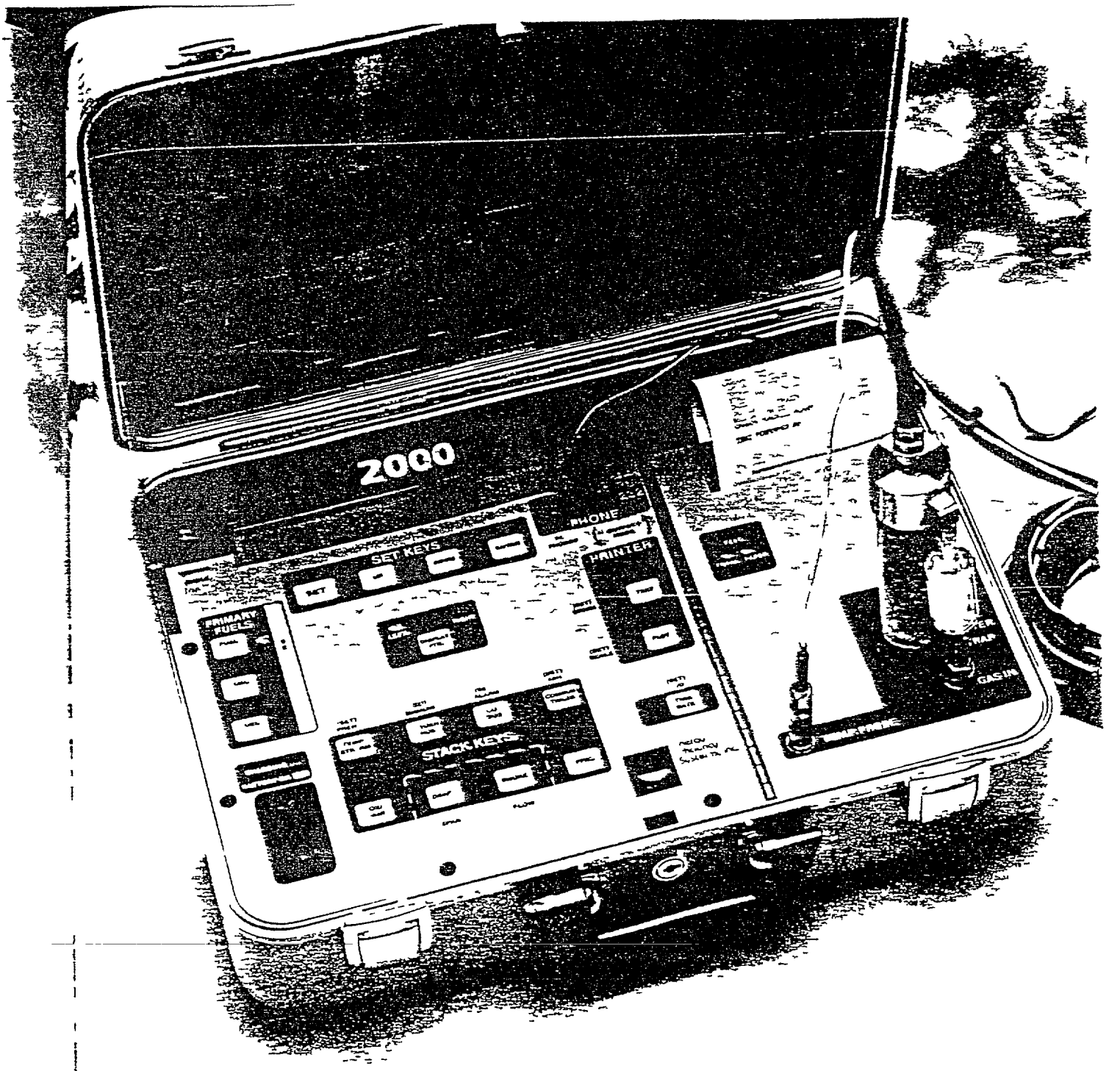

ENERAC 2000

The Enerac 2000 represents a new generation in integrated combustion management. Its unique modular design provides the flexibility to select the optimum combustion analyzer to meet every need. For the first time the capabilities of a comprehensive combustion analyzer can be expanded with add-on communication, environmental (NOX–SO2), and data modules.

All the modules can be purchased with the unit or quickly field installed when needed. Each is priced well within the budgetary authority of most combustion managers. Enerac 2000 an integrated combustion management tool that will

- Improve Plant Performance
- Increase Safety
- Save Fuel

Ultrasonic Leak Technology for Energy Conservation, Safety and Loss Prevention

TEST
- Compressed Air Leaks • Gas Leaks
- Vacuum Leaks
- Electrical Leaks (such as arcing)
- Seals & Gaskets • Heat Exchangers
- Developed by the Worldwide Leader in Ultrasonic Instruments

Includes a Video Training Program for Ultrasonic Leak Detection Techniques

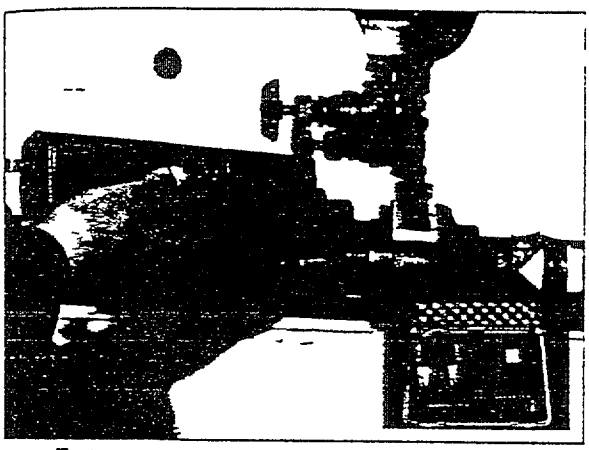

Test pressure or vacuum leaks with the EPD-500S

The High Cost of Procrastination

Estimates of loss/year costs of air and Nitrogen have become staggering The cost of savings of the relatively simple project or repairing leaks are tremendous

The estimated cost per year of a 1/8 air leak is $2 980 00 If only one 1/8 air leak was assumed for each of our main plant areas the total annual loss cost would be approximately $23 840 00 Nitrogen leaks are even more expensive events One Nitrogen leak of only 1/16 costs a whopping $10 700 00 (est) per annum If we use the air leak scenario for the 1/16" Nitrogen leak the loss cost would be almost $75 000 00 A larger leak such as a broken 1/4 OD instrument line will cost a plant $270 00 per day THAT'S OVER $90 000 00 per year in Nitrogen for ONE leak

A total savings of nearly $100 000 00 annually just for repairing fourteen or so small leaks a fair return There are likely more than that when one considers the total number of possible leak sources there are in some plants The savings is more than sufficient to cover and definitely justifies the cost of the repair staff the detection equipment all the tools a manlift and the materials needed to make the repairs

Under these circumstances and with the costs involved in today s competitive market a leak detection program must be an imperative As the program progresses routine leak monitoring could and should be undertaken to assure that a high level of line leakage does not again become a source of loss to the plant

air leak costs based on 100 psig $0 22/Mcf 867 hrs./yr

Nitrogen leak cos s based on 150 psig $0 214/Ccf 8670 hrs/hr

(Industry standards for leakage and nominal area charges for Nitrogen Cost/Ccf often INCREASES with excessive consumption)

By sensing the sub le high frequency emissions of ultrasound the **EPD 500S** allows you to detect leaks in practically any type of vacuum or pressurized gas system Using state of the art electronics the **EPD 500S** converts ultrasonic signals between 20 kHz and 60 kHz into the audible range By scanning around suspect areas the sound of a leak will be heard in headphones and seen as intensity increments on an analog meter All you need to do is scan an area and follow the leak sounds to the loudest point it s that simple

Because it is sensitive to ultrasound the **EPD-500S** will ignore most ambient plant noises making it easy to use in loud plant environments

TESTING FLEXIBILITY

The **EPD-500S** senses only the turbulent flow produced by a leak For this reason it may be used to test any type of gas leak even if wind is blowing or if there is a saturation of the gas in an enclosed environment

Complete Kit The **EPD-500S** includes noise attenuating headphones rubber focusing extension recharger (110 or 220V) video training operation manual carrying case and 1 year warranty

EPD 500S KIT ***$1495 00***

TRY EPD'S *UNIQUE* ULTRASONIC TONE TEST

This unique ultrasonic transmitter emits a powerful patented warbling ultrasound Place the Warble Tone Generator inside a tank behind a wall window or door The intense signal will instantly flood the area with ultrasound and seek a pathway of least resistance through a broken seal gasket or pin hole Ideal for use when conventional pressure or vacuum testing is not possible Must be used with EPD 500S

EPD WTG1	*$ 395 00*
EPD WTG2SP	*$ 425 00*
EPD 500STG (Scanner & Tone Generator)	*$1695 00*

Covered by one or more of the following patents 4416145 EP015115 502674183

EPD WTG2SP 1 NPT Fitting

EPD WTG1 Ultrasonic Transmitter

COMPRESSED AIR – It Isn t Free TRAINING VIDEO

This humorous video teaches how to reduce compressed air waste and save a plant hundreds of thousands of dollars a year in energy bills One sitting pays you back.

EPD VT110 ***$99 00***
EPD VT110S* ***$99 00***

Spanish

LEAK DETECTION

EPD • 14 HAYES STREET, ELMSFORD, NEW YORK 10523 USA
TOLL FREE 1 800-892 8926 USA & Canada • INT'L 1 914 592 1234 • FAX 914 347 2181

76

Heat Spy° Has Superior Accuracy and Target Resolution. New Optional Laser Aiming Sight.

Applications

Steam Traps Electrical Busses
Bearings Paper Plastic Rubber
Glass Ceramic Painted Surfaces
Grains Chips Asphalt Wood
Stacks Furnaces Shells Dies
Heat Treating Chemical Processes
Circuit Boards Wave Soldering
Welding High Voltage Targets
Moving and Rotating Machinery
Distant and Hard to Reach Objects

Ultra High Accuracy DHS-24X
0 to 1000 F 20 to 550°C

You can t get more accuracy or sensitivity between these temperature ranges +3 F/-1 5°C to be precise Repeatability is a tight -1 F Use the DHS 24X to measure all normal materials including glass surfaces Carbon dioxide and water vapor won t affect readings Laser aiming sight with LED dis play and FM approved models are available

3 Year Warranty

DHS 24X LCD Display
DHS 24XL1 LCD Laser Sight
DHS 24L1 LED Display Laser Sight

Wide Range DHS 26X
0 to 2000°F 20 to 1000°C

Our most popular Heat Spy combines the ± 3% accuracy of the DHS 24X with a temperature range suitable to most general purpose maintenance and process applica tions The DHS 26X features an optional telescopic sight as well as LED laser sight and FM approved models

3 Year Warranty

DHS 26X LCD Display
DHS 26XT LCD Telescopic Sight
DHS 26XL1 LCD Laser Sight
DHS 26L1 LED Display Laser Sight

High-Temperature DHS-28X
32 to 2500°F 0 to 1400°C

We took our general purpose Heat Spy one step higher for those glass gobs heat treating annealing and welding applications You still get 3% FS accuracy and 3°F repeatability Laser aiming sight optional

At high temperatures you probably won t get very close to your target so we recommend the telescopic sight

3 Year Warranty

DHS 28X
DHS 28XT Telescopic Sight
DHS 28XL1 Laser Sight

Economy Model DHS-10X
0 to 550°F 20 to 275°C

If you can use a Heat Spy quality general purpose I R thermometer for a low price select the DHS 10X Emissivity is fixed at 95 which is the most common for general applications Measure organic materials painted surfaces plastics insulation and factory machinery (Recorder output and peak hold not available)

3 Year Warranty

DHS 10X

DHS-10X Target Diameter vs Distance

Distance (feet)	2	10	20
Target Diameter (inches)	2	7	13

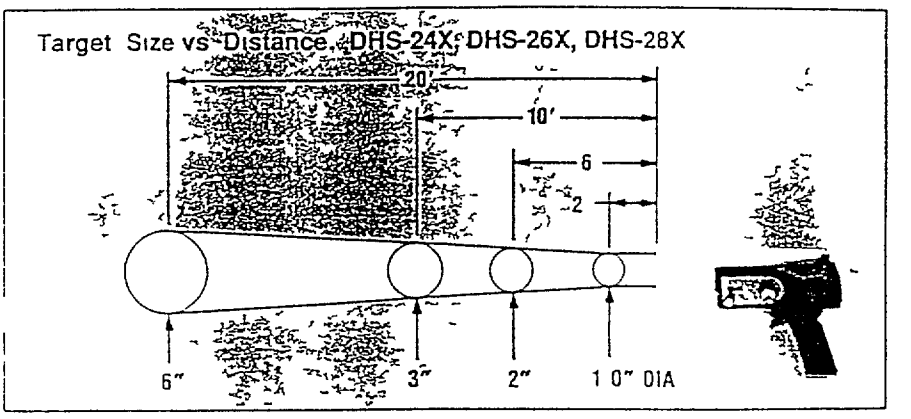

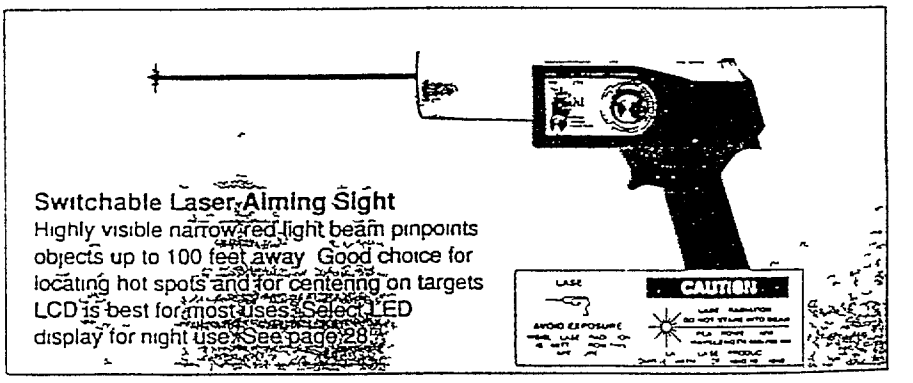

Switchable Laser Aiming Sight
Highly visible narrow red light beam pinpoints objects up to 100 feet away Good choice for locating hot spots and for centering on targets LCD is best for most uses Select LED display for night use See page 28

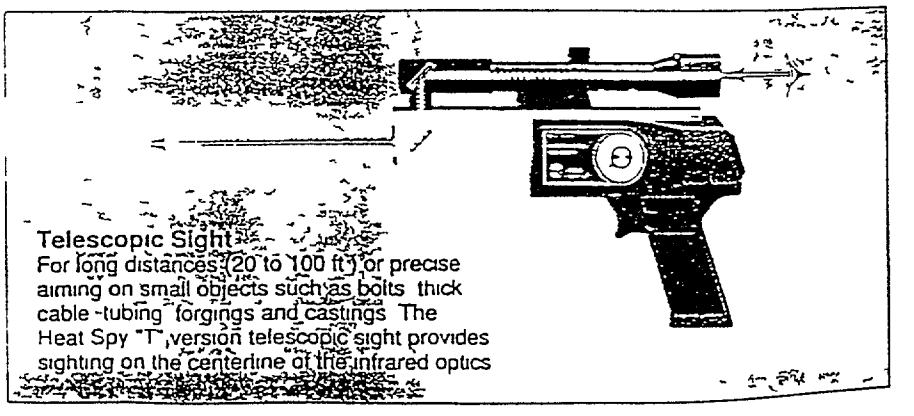

Telescopic Sight
For long distances (20 to 100 ft) or precise aiming on small objects such as bolts thick cable tubing forgings and castings The Heat Spy "T" version telescopic sight provides sighting on the centerline of the infrared optics

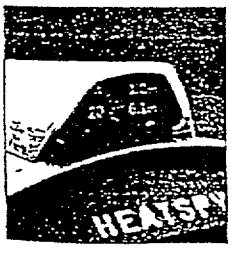

Enclosed Optical Sight
For most applications the standard enclosed optical sight provides target definition at 4 ft and 20 ft with parallax correction

FOR HEAT SPY SPECIFICATIONS REFER TO PAGE 29

BEST AVAILABLE COPY

42 1162

ТУ 25-7363 025-88

ПІРОМЕТР ЧАСТКОВОГО ВИПРОМІНЮВАННЯ «СМОТРИЧ-М6П»

Призначений для безконтактного вимірювання температури об'єктів при відпрацьовуванні різноманітних технологічних процесів та експрес-контролю температури обладнання.
Застосовуються практично у всіх галузях промисловості, а також в сільському господарстві та наукових дослідженнях.
Показ температури на табло в цифровому вигляді
Пірометр мікропроцесорний

Діапазон вимірювальних температур, °С	від мінус 35 до 1100
Основна похибка, °С	±(0,01tвим +1)
Робочий спектральний діапазон, мкм	від 8 до 14
Показник візування	1 30
Час установлення показів, с	2,0
Номінальна робоча відстань, м	1,0
Живлення, В	вмонтована батарея з напругою 6,25
Споживана потужність, Вт	1,0
Маса, кг	1,5
Габаритні розміри, мм	

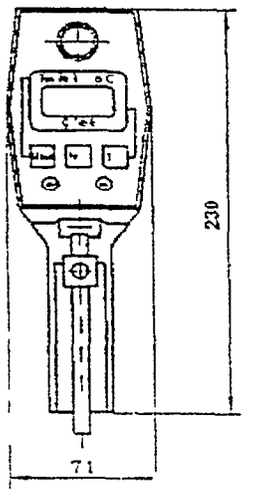

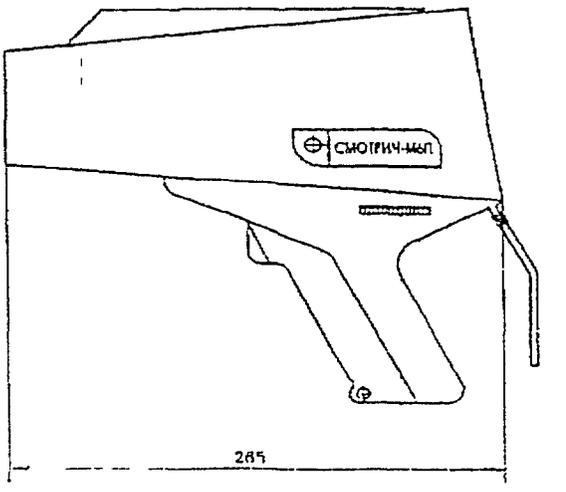

AVAILABLE COPY

Технічні вимоги

1 Пірометр грунтується на конструктивній, схемотехнічній та метрологічній базі агрегатного комплекту стаціонарних пірометрів АПІР-С (1 черга)

1 1 Комплектність (ПВ-6 + ПЧД-131 або ПЧД-121) уточнюється при замовленні

2. Спеціальні технічні вимоги на пірометр

2 1 Градуювальна характеристика спеціальна, індивідуальна або стандартна з шириною діапазону (250 - 1000) °С	
2 2 Спектральні діапазони, мкм	0,8 - 1,2, 1,2 - 1,8
2 3 Загальні діапазони вимірюваних температур відповідно до спектральних діапазонів, °С	800 - 2500, 250 - 1300
2 4 Показник візування, в залежності від типорозміру ППП, нижньої границі вимірювання та спектрального діапазону	1/10 - 1/300
2 5 Робоча відстань фіксована, уточнюється при замовленні, м	0,2 - 20
2 6 Основна похибка комплекту ПВ-6 + ПЧД-131 або ПВ-6 + ПЧД-121, %	0,6 - 1,0

З питань придбання пірометрів звертатись:

290053 м Львів, вул Наукова, 3
НВО «Термоприлад», тел 39-07-54
63-02-77 п Вічинюк М Г

Optional 3-Phase Adapter and RS-232 Module with PC software

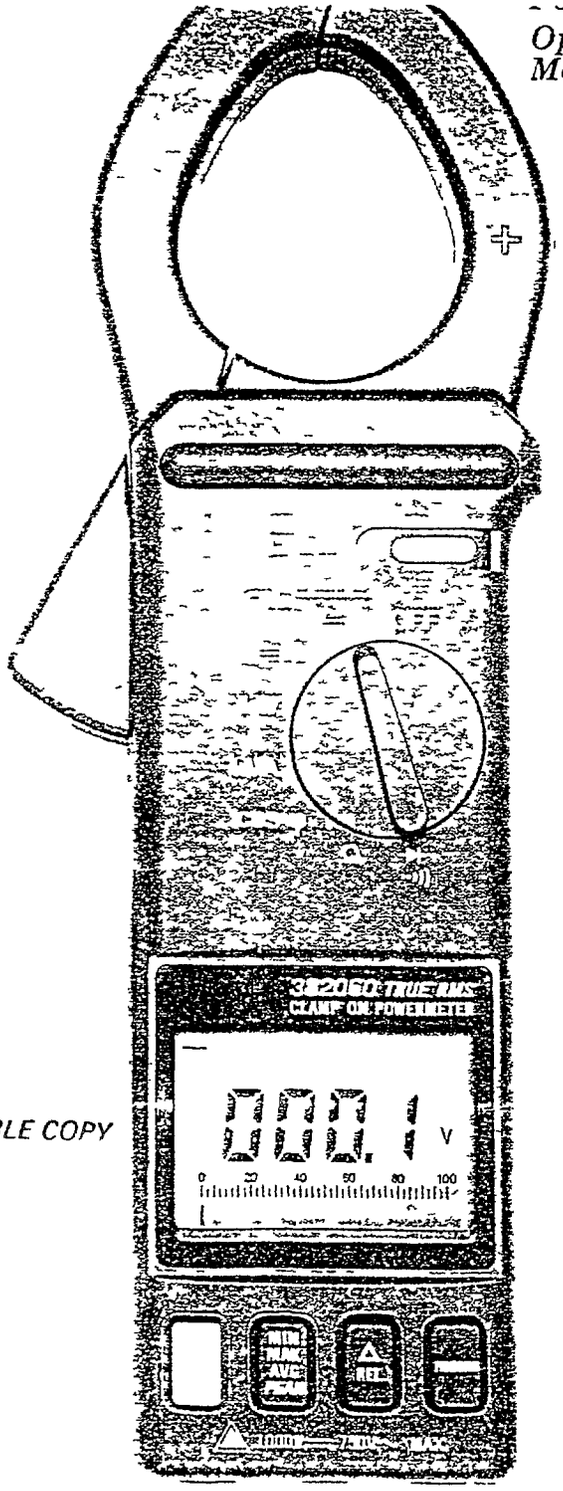

BEST AVAILABLE COPY

Features

- Display True RMS Volts Amps Watts MAX/MIN and Average
- Display Phase Angle in degrees and CosΦ with inductive or capacitance indication
- Clamp jaws open to 1.8 (46mm)
- Built in recorder datalogs up to 1600 readings
- Full function display on large 4 digit 2 LCD with 40 segment bar graph and Peak Hold
- Auto ranging or manual range
- Optional 3 Phase Adapter connects to bottom of meter and enables user to measure True Power (KW) Apparent Power (KVA) and Power Factor (CosΦ) of balanced and unbalanced loads using clamps and supplied clip-on leads
- Optional RS 232 module with PC software to capture and display data
- Complete with 9V battery alligator clips test leads, & case

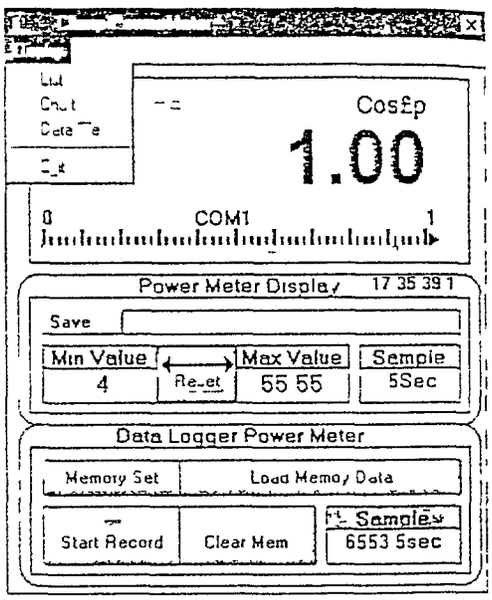

PC software included

SPECIFICATIONS

Display Range	Accuracy	Resolution	Overload
[illegible]	[illegible]	[illegible]	[illegible]

ORDERING INFORMATION

Catalog No	Model	Description	Price
[illegible]	[illegible]	Clamp On Power Data Logger	[illegible]
[illegible]	[illegible]	3 Phase Adapter	[illegible]
[illegible]	[illegible]	Plug in RS 232 Interface Module	[illegible]
NISTCERT	—	NIST Traceable Certificate	[illegible]
NISTCERTL	—	NIST Traceable Certificate with Data	[illegible]

Dwyer Inclined Stationary Manometers

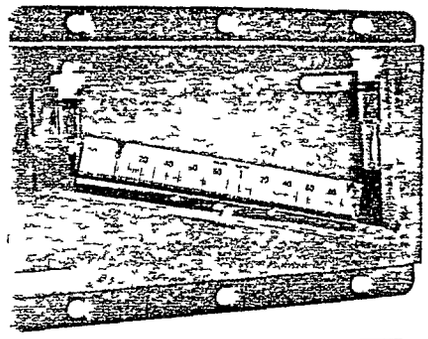

4 thick acrylic plastic body is a solid block virtually unbreakable stable and absolutely free of the drift or distortion

Glass tubes accurate to ±.02 are permanently glued or bonded in blocks will not require recalibration because of distortion

Ground glass bubble level sensitive to ±15 125 Sec mm 12 long x .375 diameter and provided with two red lines for easy visibility and alignment

Parallax free reading for maximum accuracy and consistency

O ring sealed fluid level plunger adjustment for easy leveling

Catalog No	Model	Range In. H O	Minor Scale Div	Scale Length	Price
Inclined Type					
DW332.0	200	0.0 to 1.0	.02	5 1/2	$ 20.00
DW33231	200.5	0.0 to 1.0	.01	8 3/4	124.00
DW33232	201	.05 to 0.0 to .50	.01	5 1/2	119.00
DW33233	202	.20 to 0 to 2.0	.02	8 1/2	130.00
DW33234	202.5	.20 to 0 to 2.0	.01	8 3/4	136.00
DW33235	203	.20 to 0.0 to 3.0	.02	8 3/4	135.00
DW33236	205	.5 to 0 to 2.5	.005	6	137.00
DW33237	244	0.4	.02	13	205.00
DW33238	246	0.6	.02	0	2.0.00
Vertical Type					
DW33239	200	0	.10	4 1/2	124.00
DW332.0	06	0.6	0	7 3/	114.00
DW332 1	08	0.8	0	9	121.00
DW332 2	3 0	0.10	.10	11 1/8	124.00
NIST IN1	—	NIST Traceable Certificate with Data			99.00

Roll-Up "U" Tube Manometers

Read static pressure vacuum or differential pressure When the pressure is imposed each the number of inches one column rises and the number of inches the other column travels down Rolls up into a compact coil and locks easily in this durable metal case or soft box No tube loss No loose caps or inserts to lose

Catalog No	Model	Range Inches	Mercury Req. Oz. (Wt.)	Price
[illegible]		[illegible]	[illegible]	[illegible]
[illegible]				[illegible]
[illegible]		[illegible]	[illegible]	[illegible]
DW33210	1211 4	2.0 to 0 to 2	2 2	[illegible]
DW33211	1211 0	5.0 to 0 to 5	15	7 00
DW33212	1211 6	18.0 to 0 to 18	17 2	48.00
DW33213	1211 8	40 to 0 to 40	22 2	52.00
DW33214	211 60	0 to 60	7	[illegible]
DW33215	12 1 2	76 to 0 to 76	32	58.00
DW33216	211 1 0	30.0 to 0 to 60	7	62.00
Catalog No	**Model (Metric)**	**Range CM**	**Mercury Req. Oz. (Wt.)**	
DW33217	1211 0	25.0 to 0 to 25	11	48.00
DW33218	1211 100	50 to 0 to 50	18 1/2	49.00
DW33219	1211 00	100 to 0 to 100	35	61.00
NIST NM3	—	NIST Traceable Certificate with Data		199.00

Air Velocity and Pressure Meter

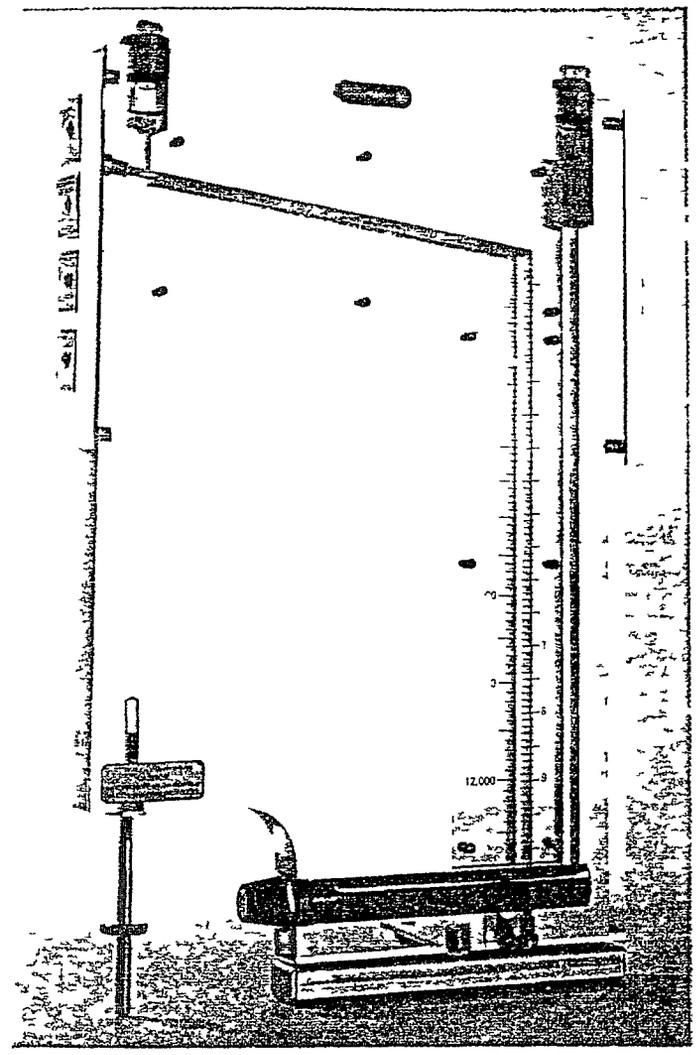

Kit includes

- Stainless Steel Pitot Tube (18)
- Suitable for Temperatures to 1500 F
- Rubber Tubing With Connectors
- Magnetic Side Mountings
- Red Gauge Oil
- Dwyer Air Velocity Calculator
- Steel Carrying Case

Series -00 Air Meters with Combination Inclined/Vertical Scales Suitable for total pressures to 100 psig, temperatures up to 1500°F

Catalog No.	Model	Range inches H2O	Velocity FPM	Minor Scale Divisions Range in inches Inclined Section	Vertical Section	Dimensions in inches	Price
[illegible]	-00-9	[illegible]	400 to 3000	1 2.5" w.c.	0 1—	1 x 11 1 4	$222.29
[illegible]	-00-3	[illegible]	400 to 1750	.01 .1 w.c.	0 1— 1 w.c.	5 2 x 11 x 4	[illegible]
[illegible]	-00-23	3 to 23	500 to 19,000	12 1 to 2.5" w.c.	.01 2.—.5" w	5 2 x 1 x 4	4 [illegible]
NIST	NIST	Traceable Certificate with Data					39.00

Differential Pressure Gauge Series 2000

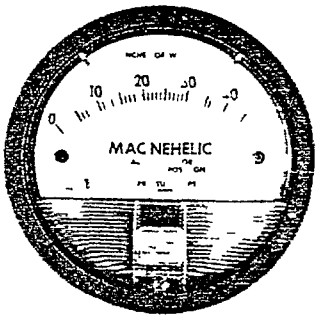

Ambient Temperature	0 to 140°F
Pressure Range	0 to 0.5 psig
Accuracy	± 2% of full scale (3% on 0 and 4% on 00 ranges) throughout range at 70°F
Connections	1/8 NPT high and low pressure ports indicated—one pair on side and one pair on back

Catalog No	Model	Range (in. H2O)	Minor Div	Price
DW33501	2000-00	0 to .25	.005	$61.00
DW33502	2000-0	0 to .50	.01	59.00
DW33503	2001	0 to 1.0	.02	59.00
DW33507	2005	0 to 5.0	.10	59.00
DW33510	2010	0 to 10	.20	59.00
DW33512	2020	0 to 20	.50	59.00
DW33516	2050	0 to 50	1.0	59.00
DW33519	2100	0 to 100	2.0	59.00
DW33520	2150	0 to 150	5.0	59.00
Catalog No.	**Model**	**Range Zero Center (in. H2O)**	**Minor Div**	
DW33521	2300-0	.25 to 0 to .25	.01	61.00
DW33523	2302	1 to 0 to 1	.05	61.00
DW33525	2310	5 to 0 to 5	.20	61.00
DW33527	2330	15 to 0 to 15	1.0	61.00
Catalog No	**Model**	**Range PSI**	**Minor Div**	
DW33528	2201	0 to 1	.02	59.00
DW33532	2205	0 to 5	.10	59.00
DW33533	2210	0 to 10	.20	82.00
DW33535	2220	0 to 20*	.50	82.00

These ranges are equipped with medium pressure (MP) option standard

Dual Scale Air Velocity Units

Catalog No	Model	Range (in. H2O)	Range Air Velocity FPM	
DW33536	2000-00AV	0 to .25	300 to 2000	61.00
DW33538	2001AV	1 to 1.0	500 to 4000	59.00
DW33540	2010AV	0 to 10	2000 to 12500	59.00
NISTPR50	—	NIST Traceable Certificate		59.00
NISTPR51	—	NIST Traceable Certificate with Data		99.00

Please inquire for additional models and accessories

Dwyer Pressure Switch/Gauges

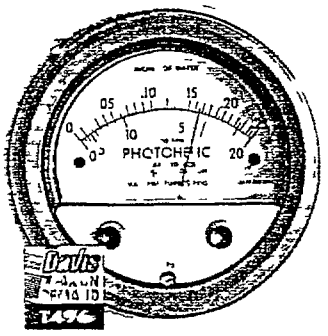

Ambient Pressure Range	0°F to 140°F Low temperature models available as an option
Related Pressure Photohelic	0" hg to 25" hg vacuum pressure in either side of diaphragm MP model 25" hg and HP model 60 psig also available Compound 30" hg to 60 psig
Accuracy	Photohelic ± full scale at 0 to 50 mode ± 1% on 00 mode Compound ± 2% of full scale (0 to 100% on 300 Series ± 1% -32.5 to -32.0 ... 01)
Gauge Connection	Photohelic 5/8" PT Capsuhelic 1/4 NPT
Electrical Ratings (Of Relays)	0 amps at 0.2-0 AC 0 Hz resistive
Power Required	110 / 50/60 Hz
Output Operating	4 mode

Catalog No	Model	Description	Price
DW333311	A370	Surface Mounting Bracket Use on vertical or horizontal surfaces	$16.00
DW33931	3000-00	0 to .25" H2O .005 Divisions	228.00
DW33932	3000-0	0 to .50" H2O .01 Divisions	216.00
DW339321	3001	0 to 1.0" H2O .01 Divisions	216.00
DW33936	3005	0 to 5.0" H2O .10 Divisions	216.00
DW33939	3010	0 to 10" H2O .20 Divisions	216.00
DW33945	3050	0 to 50" H2O 1.0 Divisions	216.00
DW33948	3100	0 to 100" H2O 2.0 Divisions	216.00
DW33949	3150	0 to 150" H2O 5.0 Divisions	216.00
DW33950	3201	0 to 1 psi .02 Divisions	216.00
DW33954	3205	0 to 5 psi .1 Divisions	216.00
DW33955	3210	0 to 10 psi .2 Divisions	228.00
DW33957	3220	0 to 20 psi 1.0 Divisions	228.00
Capsuhelic Only			
DW33960	43200	0 to 200" H2O 5.0 Divisions	397.00
DW33963	43500	0 to 500" H2O 10.0 Divisions	397.00
DW33964	43230S	0 to 30" H2O 1.0 Divisions	397.00
DW33968	432100S	0 to 100" H2O 2.0 Divisions	397.00
DW33970	432300S	0 to 300" H2O 10.0 Divisions	397.00
Zero Center Ranges			
DW33968	3300-0	.25 to 0 to .25" H2O .01 Divisions	223.00
DW33969	3301	.5 to 0 to .5" H2O .02 Divisions	221.00
DW33970	3302	1 to 0 to 1" H2O .05 Divisions	221.00
DW33972	3310	5 to 0 to 5" H2O .20 Divisions	221.00
DW33974	3330	15 to 0 to 15" H2O 1.0 Divisions	221.00
Dual Scale Air Velocity Units			
DW33975	3000-00AV	0 to .25" H2O 300 to 2000 fpm	229.00
DW33977	3001AV	0 to 1.0" H2O 500 to 4000 fpm	216.00
DW33979	3010AV	0 to 10" H2O 2000 to 12500 fpm	216.00
NISTPR54	—	NIST Traceable Certificate	99.00
NISTPR55	—	NIST Traceable Certificate with Data	135.00

Please inquire for additional models and accessories

Differential Pressure Transmitter

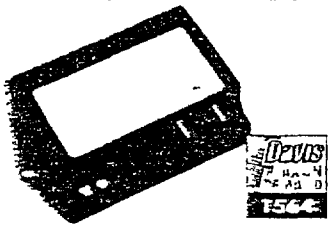

T Series Ranges	R Series Ranges	
001 = 0.1"	010 = 10.0"	02P = 2 psi
002 = 0.2"	015 = 15.0"	03P = 3 psi
003 = 0.3"	030 = 30.0"	05P = 5 psi
005 = 0.5"	050 = 50.0"	0P = 10 psi
010 = 1.0"	100 = 100.0"	1P = 15 psi
020 = 2.0"	080 = 80.0"	0P = 20 psi
030 = 3.0"	100 = 100.0"	5P = 30 psi
050 = 5.0"	0P = 1 psi	
100 = 10.0"		

Power Supply	Voltage Out	Voltage Out	Current Output
24 VAC	0-5 Volt	0-5 Volts (Pressure Ref)	4-20 mA
110 VAC	0-5 Volt	0-5 Volt	4-20 mA
10-30 Vdc	1-5 Volts	1-5 Volts	4-20 mA
	0-10 Volts (R only)	0-10 Volts	0-10 mA
		Inverted output	Inverted 20-4 mA

Catalog No	Model	Description	Price
MS19122	T10	DC Power Input, Voltage Output	$185.00
MS19122T	T20	AC Power Input, Voltage Output	195.00
MS19123	R10	2-wire 4-20mA Output	185.00
MS19123T	R20	AC Power Input, 4-20mA Output	205.00
MS19123	R12	DC Power Voltage Output	170.00
MS19124	R22	AC Power Voltage Output	180.00
MS19125	R32	DC Power 4-20mA Output	170.00
MS19126	R42	AC Power 4-20mA Output	190.00
NISTPR95	—	NIST Traceable Certificate	99.00
NISTPR96	—	NIST Traceable Certificate with Data	135.00

T Series Accuracy 1% of Range

R Series Accuracy 1% of Range

(Including non-linearity and hysteresis)

Zero and Span adjustments are non-interactive

When ordering please specify range, power requirements and zero pressure outputs

Differential Pressure Recorder

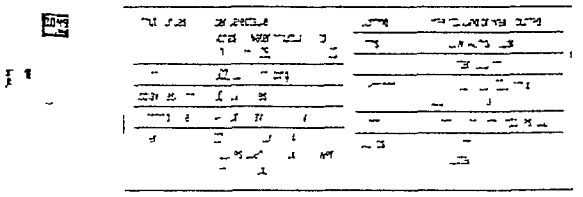

Provides exceptional data accuracy and response time

Monitors and records continuously for up to 31 days

Alerts personnel when differential pressures are low or too high through audio and visual alarms

Provides real time differential pressure information

Records on an 8" circular chart for convenience and exceptional data resolution

Displays minimum and maximum readings for spot checks

Tamper resistant with locking control keypad and door

Allows user to program recording time and data range

Catalog No	Model	Description	Price
DK116390	PRxA	Differential Pressure Recorder	$899.00
DK177832	N3PR	NIST Traceable Calibration 3 Pt	129.00
DK116213	N4PR	NIST Traceable Calibration Ultima	199.00

Please inquire for charts and accessories

Dry & Liquid Filled Stainless Steel Pressure Gauges

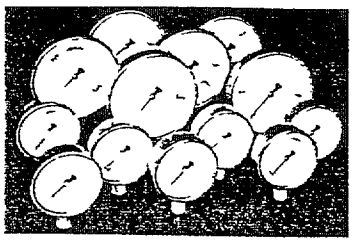

[illegible]	
[illegible]	[illegible]
[illegible]	[illegible]
[illegible]	[illegible]
[illegible]	AISI 316 [illegible] steel
[illegible]	[illegible]

[illegible]	
[illegible]	[illegible]
[illegible]	[illegible]
[illegible]	[illegible]
[illegible]	AISI [illegible] stainless
[illegible]	[illegible]

Model 1009	Dial Size	2 1/2"		3 1/2"	
Range		Catalog No	Price	Catalog No	Price
0-15psi		AS109201	$70 00	AS 09215	$81 00
0-30psi		AS109202	70 00	AS109216	81 00
0-100psi		AS109203	67 00	AS109717	77 00
0-200psi		AS109204	67 00	AS109218	77 00
0-400psi		AS109205	67 00	AS109719	77 00
0-600psi		AS109206	67 00	AS109220	77 00
0-1000psi		AS109207	67 00	AS 09221	77 00
0-2000psi		AS109208	74 00	AS109222	88 00
0-5000psi		AS 09209	74 00	AS109223	88 00
0-10 000psi		AS109210	74 00	AS109224	88 00
Vacuum	30"HG to 0	AS109211	70 00	AS 09225	81 00
[illegible]	[illegible] HG 0 [illegible]	AS 092 2	70 00	AS 092[illegible]	81 0
	30 HG to 0-100psi	AS109213	0 00	AS109227	81 00
	30"HG to 0 [illegible] 00 psi	AS109214	70 00	AS109229	81 00
Model 1008	**Dial Size**	**2 1/2"**		**4**	
Dual Range					
0 1 psi 100Kpa		AS108301	51 00	AS92103	97 00
0 60psi 400Kpa		AS 08302	48 00	AS92105	92.00
0 100psi 700Kpa		AS108303	48 00	AS92106	92 0
0-200psi 1400Kpa		AS108304	48 00	AS92107	92 00
0-400psi 2800Kpa		AS108305	48 00	AS92108	92.00
0 600psi 4000Kpa		AS108306	48 00	AS92109	92 00
Vacuum	0"HG 0 0	AS 08307	51 00	AS921 0	97 00
Compound	30"HG 0 0 15psi	AS108308	51 00	AS92171	97 00
	30"HG to 0-100psi	AS108309	51 00	AS92 02	97 00
	0"HG to 0- 00psi	AS108310	51 0	AS 21 2	37 00
NIST Traceable Certificate		NISTPR80	99 00		
NIST Traceable Certificate with Data		NISTPR81	135 00		

Low Pressure/ Commercial Pressure Gauges

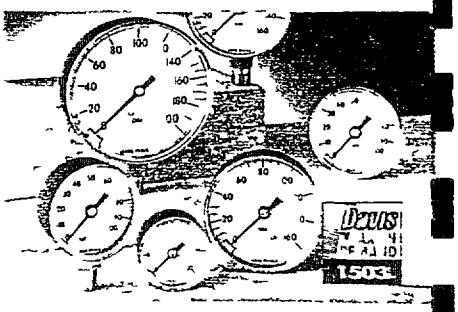

[illegible]	
[illegible]	[illegible]
[illegible]	[illegible]
[illegible]	[illegible]
[illegible]	[illegible]
[illegible]	[illegible]
[illegible]	[illegible]
[illegible]	Brass

[illegible]	
[illegible]	[illegible]
[illegible]	[illegible]
[illegible]	[illegible]
[illegible]	[illegible]
[illegible]	[illegible]
[illegible]	[illegible]
[illegible]	

Commercial Pressure Gauge	Model 1005 2 1/2" Dial	
Catalog No	Range	Price
AS105200	15 PSI	$19 00
AS105201	30 PSI	19 00
AS 05202	50 PSI	19 00
AS105203	100 PSI	19 00
AS 5204	160 PSI	19 00
AS 5205	200 PSI	19 00
AS 0 206	00 PSI	9 0
AS 5207	400 PSI	9 0
AS 208	600 PSI	9 0
AS105209	30" HG VAC	19 00
Compound		
AS 0 210	0" HG 0/15 PSI	19 00
AS 05211	30" HG/0.60 PSI	19 00
AS105212	30 HG/0.100 PSI	19 00
AS105213	30" HG 0/300 PSI	9 00
NISTPR70	NIST Traceable Certificate	99 00
NISTPR71	NIST Traceable Certificate with Data	135 00

Low Pressure Gauge	Model 1490 2 1/2" Dial	
Catalog No	Range	Price
AS 61	0 to 10 oz/sq in	$33.00
AS1464	0 to 0 oz sq in	33 00
Vacuum		
AS1 [illegible]	[illegible] 0 H 0	8 00
AS [illegible]	0 [illegible] H 0	8 00
AS1467	0 [illegible] H 0	[illegible]
AS1 [illegible]	[illegible] H 0	8 00
AS [illegible]	0 [illegible] H 0	[illegible]
Inches H 0		
AS1 90	0 [illegible] H 0	3 0
AS1 92	0 [illegible] H 0	3 00
AS1 93	0 [illegible] 100" H 0	3 00
AS1495	0 [illegible]	33 00
PSI		
AS1496	0 [illegible] 3 PSI	3 00
AS1 98	[illegible]	33 00
Compound		
AS1 99	[illegible] H 0	33 00
AS1500	0" [illegible] H 0	8 00
NISTPR68	NIST [illegible] Certificate	99 00
NISTPR69	NIST Traceable Certificate with Data	[illegible]

Brass Pressure Gauges

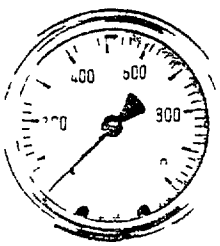

[illegible]	
[illegible]	[illegible]
[illegible]	[illegible]

Catalog No.	Model	Description	Price
VK333172	2.5" [illegible] L 1	30" 0 to 0 Hg [illegible] si	$43 0
VK333173	2.5" 14 L 1	0 [illegible] 0" Hg	43 0
VK333174	2.5" 14 L 1	0 [illegible] 0 psi	43 0
VK333175	2.5" 14 LM	0 [illegible] 00 [illegible]	43 00
VK333177	2.5" 14 L 1	0 [illegible] 00 psi	43 00
VK333178	2.5" 14 LM	0 [illegible] 600 psi	43 00
VK333179	2.5 14 L 1	0 to 1000 psi	43 00
VK333180	2.5" 14 LM	0 to 3000 psi	46 00
VK333181	2.5" 14 LM	0 [illegible] 000 psi	46 00
NISTPR74	NIST Traceable Certificate		99 00
NISTPR75	NIST Traceable Certificate with Data		135 00

Standard Pressure Gauges

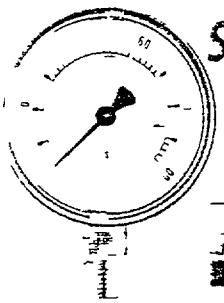

[illegible]	[illegible]
Bourdon tube	[illegible]
[illegible]	[illegible]
[illegible]	[illegible]

Catalog No	Range	Size	Connection	Acc	Conn Size	Price
VK3331 4	0 [illegible] 0 si	1.5 111 0	Center Back Mount	1	8"	$20 00
VK3331 6	0 [illegible] 0 psi	5 11 0	Center Back Mount	1.5	8"	0 00
VK3331 8	0 [illegible] 200 psi	1.5" 111 10	Center Back Mount	5	8"	20 00
VK333 9	0 [illegible] 30 si	2" 11 0	Center Back Mount	1.5	4	19 00
VK333141	0 [illegible] 100 psi	2" 111 10	Center Back Mount	1.5		9 00
VK333143	0 [illegible] 200 psi	2" 111 10	Center Back Mount	1.5	4	19 00
VK3331-4	0 [illegible] 30 psi	2.5" 111 0	Lower Mount	1.5	4	0 45
VK333 -6	0 to 100 [illegible]	2.5" 111 0	Lower Mount	1.5	4	0 5
K[illegible]1-8	9 [illegible] 200 psi	2.5" 111 10	Lower Mount	1.5	4	0 45
K3331 9	0 [illegible] 300 psi	2.5" 111 0	Lower Mount	1.5	4	0 45
NISTPR72	NIST Traceable Certificate					99 00
NISTPR73	NIST Traceable Certificate with Data					135 00

Please inquire for additional ranges

spirax sarco

Certificate No. FM163

ISO 9001

Поплавковый конденсатоотводчик FT 43 DN 15-50

Описание

FT43 — чугунный поплавковый конденсатоотводчик со встроенным автоматическим воздушником. Может быть как с горизонтальными фланцевыми соединениями так и с вертикальными — FT43V.

В конденсатоотводчике с горизонтальными соединечиями возможна дополнительная установка ручного игольчатого клапана работающего как паровыпускной затвор (ПВЗ) FT43 C. При необходимости в крышке можно сделать отверстие с соединением ³/₈ BSP или NPT для установки крана осушки.

Ограничения применения (ISO 6552)

Максимальные условия конструкции корпуса PN 16
PMA — Макс допустимое давление 16 ати
TMA — Макс допустимая температура 220 C
Холодное гидравлическое испытание 24 ати

Рабочий диапазон

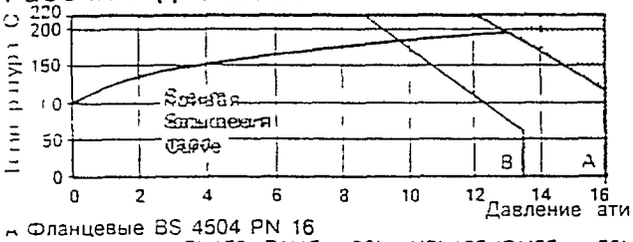

A Фланцевые BS 4504 PN 16
B Фланцевые ANSI 150 (DN15 и 20) ANSI 125 (DN25 до 50)

Изделие не используется при данных паоаметрах

PMX Макс дифференциальное давление

DN	FT43 4 5	FT43 10	FT43 14
15 до 50	4 5 атм	10 атм	14 атм

Конденсатоотводчики 40/50DN имеют ограничение PMO равное 3 PMX

Размеры и соединения

DN 15 20 25 40 и 50 стандартные фланцы BS 4504 и PN 16
При необходимости возможна поставка с фланцами ANSI 150 с отверстиями

Материалы

№	Деталь	Материал	Спецификация
	Корпус	Чугун	DIN 1691 GG 25
2	Болты крышки DN 15 25	Сталь	BS 3692 Gr 8 8
	Штифт крышки	Сталь	BS 3692 Gr 8 8
	Гайки крышки		
3	Прокладка крышки	Армированный листовой графит	
4	Крышка	Чугун	DIN 1691 GG 25
5	Седло клапана DN 15 20 25	Нерж сталь	BS 970-431 S29
	Для вертикальных конденсатоотводчиков DN 15 и 20)		
	Узел главного клапана с	Нерж сталь	BS 3146 Part 2
	антикоррозийным дефлектором DN 40 50		опс 2
6	Прокладка седла клапана DN 15 20 25	Нерж сталь	BS 1449 304 S11
	Прокладка узла главного клапана DN 40 50	Армированный листовой графит	
7	Узел шарнирной стойки	Нерж сталь	BS 4183 18/8
	Болты DN 15 20 25		
	Болты узла главного клапана DN 40		BS 970 304 S16
	Штифты и гайки DN 50		BS 6105 A4 80
8	Шаровой поплавок и рычаг	Нерж сталь	BS 1449 304 S16
9	Воздушник	Нерж сталь	
	Узел ПВЗ	Нерж сталь	BS 970 303 S21
12	Прокладка ПВЗ	Мягкая сталь	BS 1449 CS4
13	Уплотнение ПВЗ	Графит	
14	Опорная рамка	Нерж сталь	BS 1449 304 S16
15	Шарнирная стойка	Нерж сталь	BS 1449 304 S16
16	Шарнир	Нерж сталь	
17	Антикоррозийный дефлектор (только DN15 20 и 25 (гориз) и DN15 и 20 (верт)	Нерж сталь	BS 970 431 S29
18	Входной отражатель (DN40 и 50)	Нерж сталь	BS 14-9304 S15

FT 43
DN 15 и 20

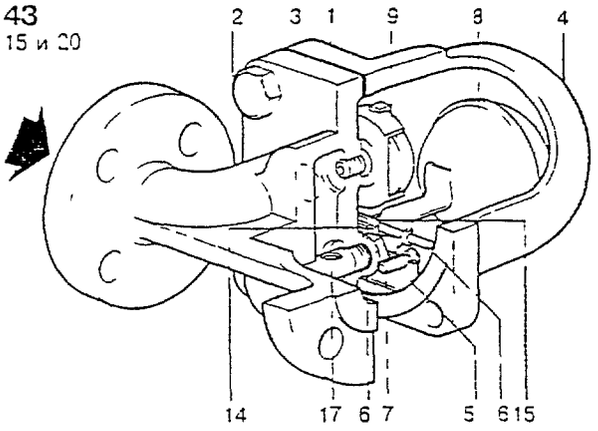

FT 43
DN 25

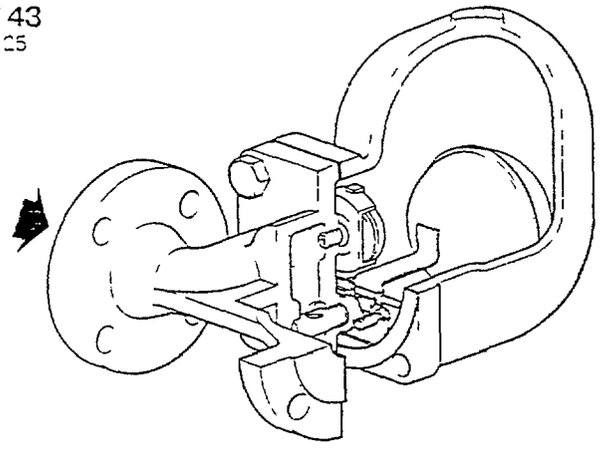

FT 43
DN 40 и 50

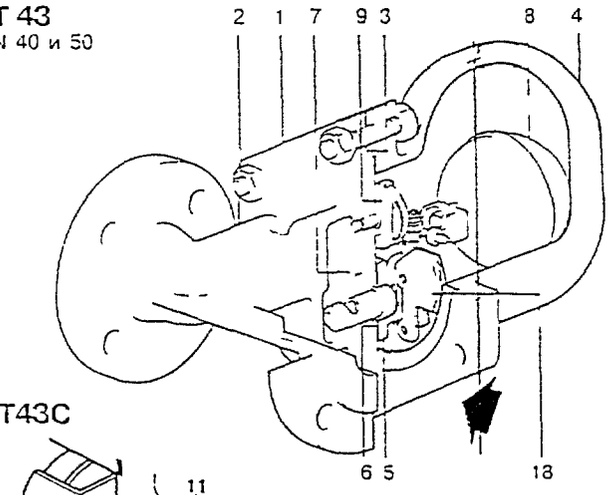

FT43C

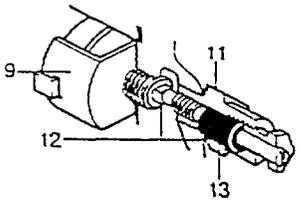

Местные правила эксплуатации могут ограничивать использование этого изделия значениями параметров ниже указанных
Для совершенствования данного изделия мы оставляем за собой право изменять его технические характеристики

© Copyright 1995

Обозначение

DN 20 FT 43 14 Конденсатоотводчик Спиракс Сарко Фланцевые соединения BS 4504 PN 16 чугунный корпус и крышка термостатический воздушник

Размеры (приблизительные), мм

DN	A	B	C	D	E	F	Масса
15	[illegible]	54	54	186	110	55	5 5 кг
20	[illegible]	54	54	195	110	165	5 5 кг
25	[illegible]	[illegible]	80	245	60	215	8 0 кг
40	[illegible]	[illegible]	110	330	200	290	[illegible] 5 кг
50	[illegible]	40	25	340	200	325	30 5 кг

Основные размеры соответствуют ISO 6554

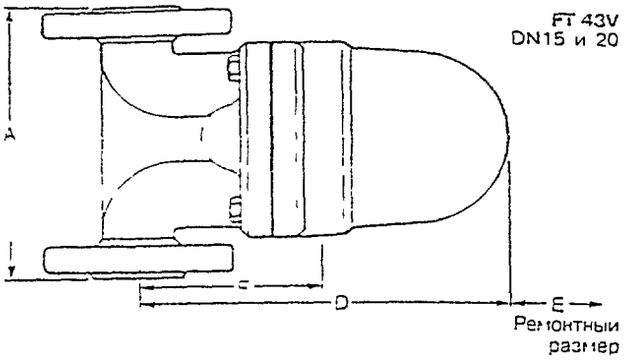

Установка

Конденсатоотводчик должен быть расположен таким образом чтобы направление потока совпадало с направлением стрелки на корпусе конденсатоотводчика а рычаг поплавка находился в горизонтальной плоскости чтобы поплавок вертикально поднимался и опускался

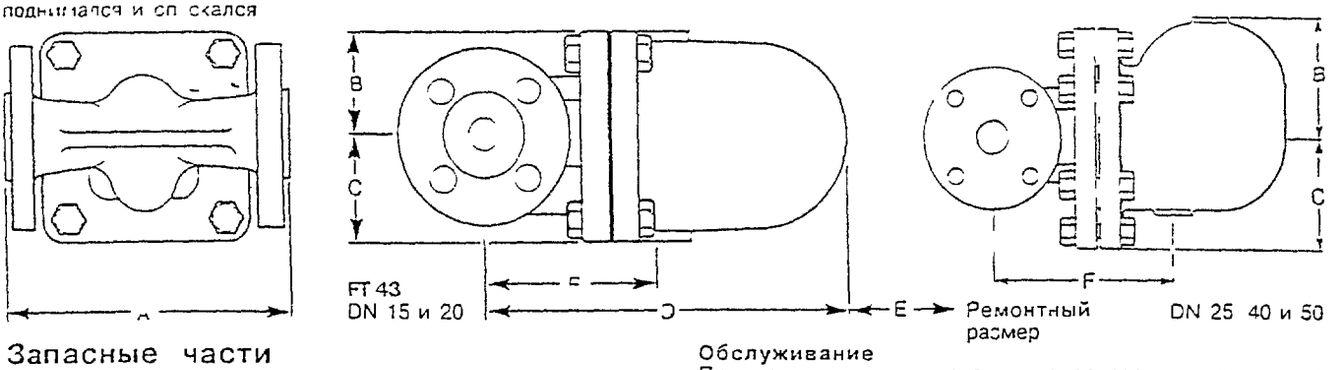

Запасные части

Поставляемые запасные части изображены сплошными линиями Детали нарисованные пунктиром не поставляются как запасные части

ЗАПАСНЫЕ ЧАСТИ	
Узел главного клапана с поплавком (DN 15 20 25 горизонтальные конденсатоотводчики)	5 6 7 8 14 15 17
Узел главного клапана с антикоррозийным дефлектором (DN 40 50) (указать горизонтальный или вертикальный)	5 6 7
Узел главного клапана с поплавком и дефлектором (только вертикальные DN 15 и 20)	5 6 7
Шаровой поплавок и рычаг (DN 40 и 50)	8
Воздушник	9
Узел паровыпускного затвор воздушник	9 11 12
Полный комплект прокладок (по 3 шт)	6 12 13

В горизонтальных конденсатоотводчиках DN 15 20 и 25 антикоррозионный дефлектор вмонтирован в корпус при изготовлении и как запасная часть не поставляется

В вертикальных конденсатоотводчиках антикоррозионный дефлектор не устанавливается

Обозначение в заказе

При заказе запасных частей используйте описание из таблицы Запасные части и не забывайте указать размер тип конденсатоотводчика а также горизонтальный или вертикальный Пример 11 — Воздушник для DN 20 FT 43 горизонтального конденсатоотводчика Спиракс Сарко

Обслуживание

При надежном изолировании конденсатоотводчик можно ремонтировать в трубопроводе При повторной сборке убедитесь что все контактные поверхности чистые и в крышку вставлен соединительный шип

Установка узла главного клапана

На конденсатоотводчиках DN 15 20 25 выкрутить опорную шарнирную стойку и седло клапана Убедитесь что поверхность седла чистая и сухая Посадите седло клапана в корпус (прокладочную пасту не применять) Установить опорную рамку и шарнирную стойку на корпусе с помощью винтов но не затягивать Соединить рычаг поплавка с шарнирной стойкой с помощью шпильки и переместив весь узел сцентровать головку клапана с отверстием седла Затянуть винты На конденсатоотводчиках DN 40 и 50 выкрутить 4 болта или гайки Снять узел основного клапана и заменить его новым Равномерно затянуть винты или гайки

Установка воздушника

Снимите серьгу поручны капсюль прокладочную пластинку и отвинтите седло Установите новые седло и стойку Соберите в обратном порядке

Рекомендуемые моменты затяжки соединений

Деталь	Размер DN	⬡ мм	или	Нм
2	15 20 25	17	M10 x 30	29 33
	40	24	M12 x 60	60 66
	50	24	M16 x 70	80 88
11		22		40 45
9		17		50 55
5	15 20 25			50 55
7	40	10	M6 x 20	10 12
	50	13	M8 x 20	20 24
[illegible]	15 25		M5 x 20	2 5 2 8

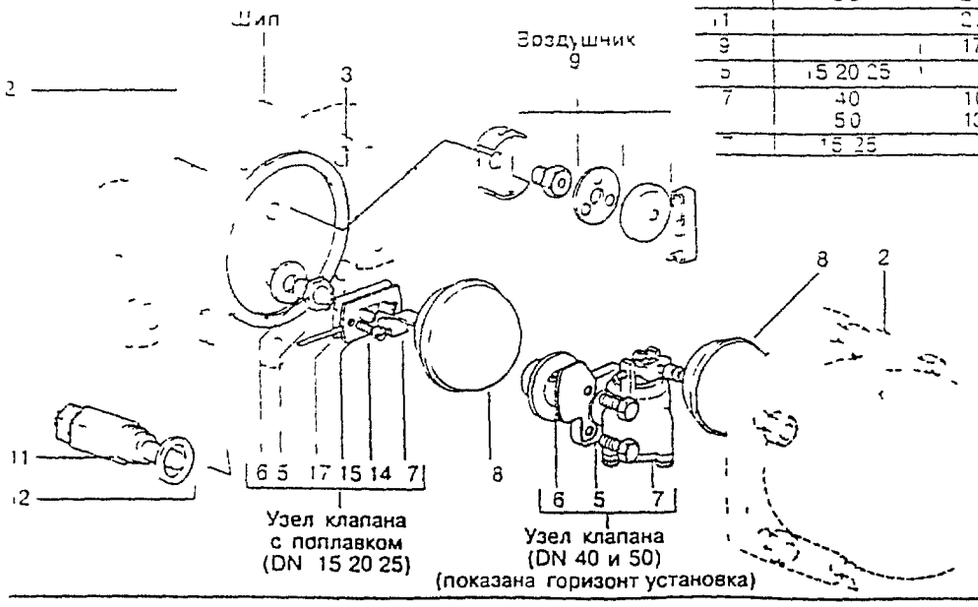

Фильтр-ловушка из чугуна Fig 33

Описание

Фильтры ловушки Y образные Fig 33 для DN 15 до 80
Стандартные сетки из нержавеющей стали с перфорацией диаметром 0 8 мм
Фильтры ловушки Y образные Fig 33 для DN 100 до 200
Стандартные сетки из нержавеющей стали с отверстиями диаметром 1 6 мм

Дополнительное оборудование

Кожухи фильтров ловушек

Сталь нержавеющая	Диаметр	1 6 мм (DN 15 до DN 80) 3 мм (DN 15 до DN 200)
	Количество отверстий	40 100 200
Монель	Диаметр	0 8 мм (DN 15 до DN 80) 1 6 мм (DN 100 до DN 200) 3 мм (DN 15 до DN 200)
	Количество отверстий	100

Ограничение применения

Корпус соответствует нормали PN 16
Максимальная расчетная температура 300 C
Давление холодного гидравлического испытания 24 атм

Диапазон рабочих параметров

Нерабочая область для данного изделия
A — A Фланц соед BS 4504 PN 16
B — B Фланц соед AS 2129 табл F
C — C Фланц соед ANSI категории 125 (включая DN15 и 20 ANSI категории 150)

Размеры и соединения

DN 15 20 25 32 40 50 65 80 100 125 150 и 200
Стандфланц соед BS 4504 и DIN PN 16 и 10 AS2129 табл F ANSI 150 (DN 15 и 20) ANSI 125 (DN 25 до 200)

Материалы

№	Деталь	Материал	
1	Корпус	Чугун	DIN 1691 GG 20
2	Крышка	DN15 50 SG чугун DN65 200 чугун	DIN 1693 GGG 40 DIN 1691 GG 20
3	Прокладка крышки	Графит листовой армированный	
4	Кожух фильтра ловушки	Сталь нерж	ASTM A240 316L
5	Шпильки крышки Гайки крышки	Сталь Сталь	BS 4439 Gr 8 8 BS 3692 Gr 8

DN 15 до 50

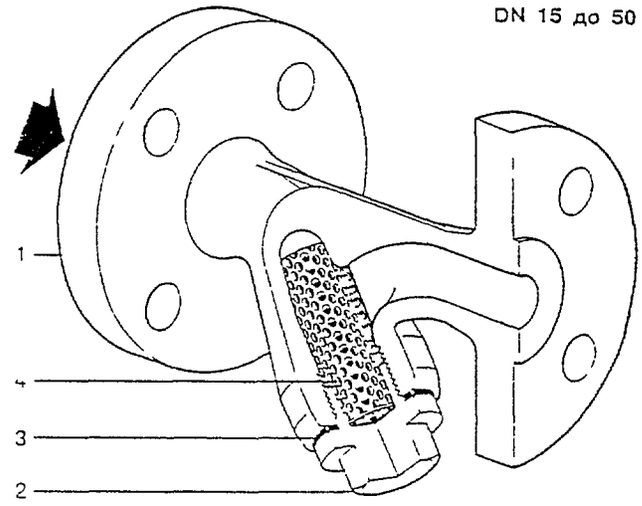

DN 65 до 200

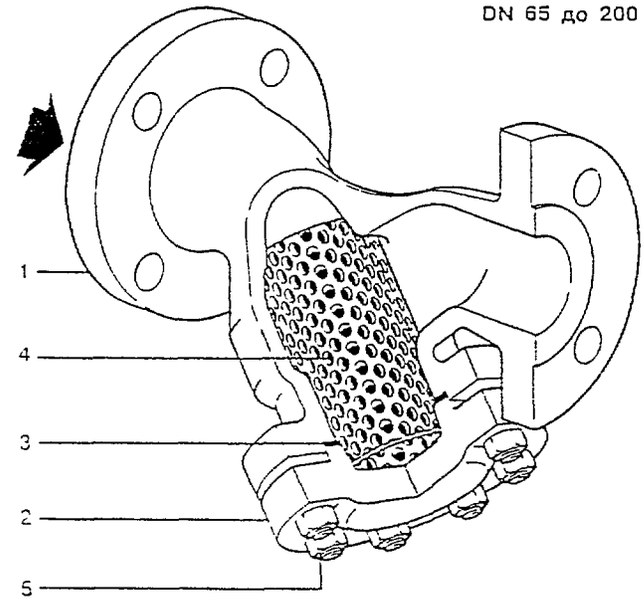

Значения коэффициента kv

DN	15	20	25	32	40	50	65	80	100	125	150	200
100 отверстий	5	8	13	22	29	46	72	103	155	237	340	588
200 отверстий	4	6	10	17	23	37	58	83	124	186	268	464

Для перевода C_v (Англ) = k_v x 0 97 C_v (США) = k_v x 1 17

Обозначение в заказе

Фильтр ловушка Спаиракс Сарко Fig 33 DN25 с фланцевыми соединениями BS 4504 PN16 с кожухом из нержавеющей стали и диаметром отверстии 0 8 мм

Использование данного изделия может быть ограничено если местными правилами эксплуатации установлены параметры ниже указанных
С целью совершенствования данного изделия мы оставляем за собой право изменять его технические характеристики

© Copyright 1995

Размеры (ориентировочные) в мм

DN	PN16 A	AS2129 A	ANSI A	B	C	Площадь сетки	Масса
	150	30	30	0	10	27см²	1 8 кг
[illegible]	[illegible]	[illegible]	50	[illegible]	30	43см²	2 7 кг
	[illegible]	[illegible]	54	[illegible]	50	[illegible]	3 4 кг
	[illegible]	[illegible]	76	[illegible]	225	[illegible]	[illegible]
	[illegible]	[illegible]	[illegible]	[illegible]	240	[illegible]	2 [illegible]
	[illegible]	[illegible]	2[illegible]	[illegible]	300	[illegible]	10[illegible] кг
[illegible]	[illegible]	[illegible]	225		335	[illegible]	21
	[illegible]	[illegible]	304	[illegible]	340	36 см²	2[illegible] кг
	[illegible]	[illegible]	350	[illegible]	415	[illegible]	38 5 кг
25	400	[illegible]	400	300	510	843см²	63 0 кг
50	[illegible]	60	480	345	[illegible]	1117см²	87 0 кг
[illegible]	500	[illegible]	596	435	730	1909см²	150 0 кг

ANSI — Размеры A — DN 15 & 20 ANSI 150
DN 25 200 ANSI 125

Присоединения крана нижней продувки или дренажа
Для установки крана нижней продувки или дренажа в крышке может быть выполнено отверстие следующих размеров

Размер фильтра ловушки	Кран нижней продувки	Кран дренажа
15	¼	¼
20 и 25	½	¼
32 и 40	1	¾
50	1¼	¼
65 80 100 и 125	1¼	¼
150 125 200	2	¼

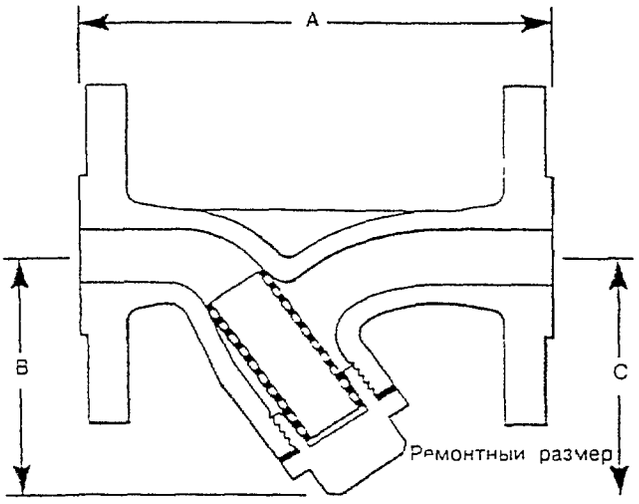

Монтаж

Фильтр ловушку следует устанавливать в направлении потока указанном на корпусе в вертикальном или горизонтальном трубопроводе

Запасные части

Поставляемые запчасти показаны сплошными линиями Детали показанные штриховыми линиями в качестве запчастей не поставляются

ПОСТАВЛЯЕМЫЕ ЗАПЧАСТИ	
Сетка фильтра ловушки	4
Укажите материал размер перфорации количество отверстий и размер фильтра ловушки	
Прокладка крышки (3 шт)	3
Набор шпилек и гаек крышки DN 65 до 150 (8 шт) DN 200 (12 шт)	5

Обозначение в заказе

При заказе всегда используйте наименования приведенные в колонке Поставляемые запчасти и указывайте размер и тип фильтра ловушки и необходимых отверстий

Пример 1 Сетка фильтра ловушки нержавеющая сталь с перфорацией 0 8 мм для фильтра ловушки Спайракс Сарко Fig 33 DN 65

DN 15 до 50

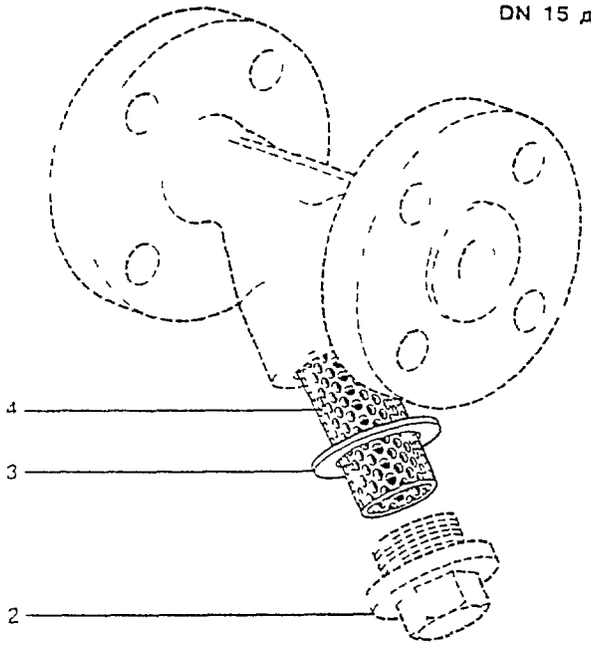

DN 65 до 200

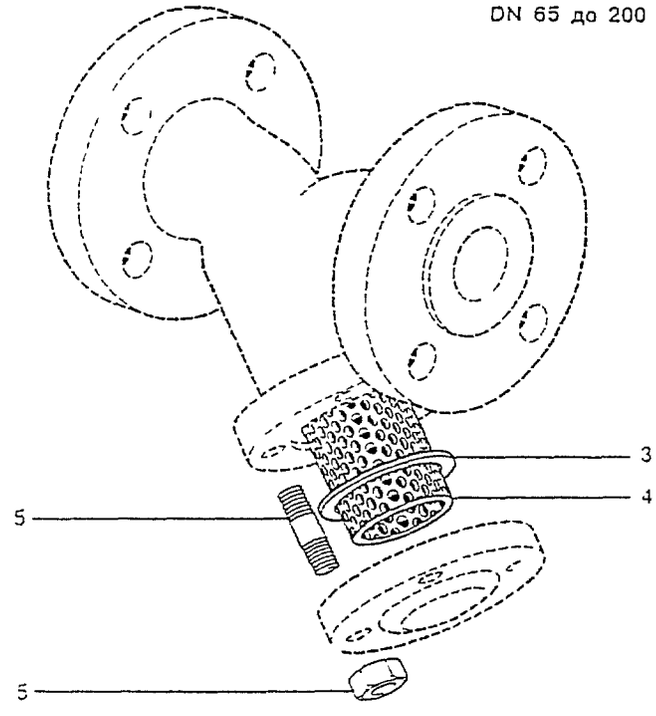

Рекомендуемые закручивающие усилия

Детали	DN	⬡ мм	или	⚙ мм	Нм
2	15	22			50 55
	20	27			60 66
	25	27			100 110
	32	41			150 165
	40	41			170 185
	50	55			190 210
5	65	19		M12 x 40	20 24
	80	19		M12 x 40	30 35
	100	24		M16 x 50	70 77
	125	24		M16 x 50	80 88
	150	30		M20 x 60	100 110
	200	30		M20 x 70	90 100

Дисковые обратные клапаны типа DCV 1, 2, 3

Описание

Дисковые обратные клапаны типа DCV 1 2 и 3 разработаны для установки между фланцами Они удобны для применения в широком спектре сред в технологических линиях системах горячей воды пара и конденсата

Ограничение применения

DCV1

Корпус соответствует максимальному давлению PN16
PMO Максимальное рабочее давление 16 атм
TMO Максимальная рабочая температура 250 C
Максимальное давление холодного гидравлического испытания 24 атм
Минимальная рабочая температура 50 C

	DCV2	DCV3
Корпус соответствует макс давлению	PN40	PN40
PMO Максимальное рабочее давление	40 атм	40 атм
TMO Максимальная рабочая температура		
Со стандартной пружиной или пружинами для сильных нагрузок	300 C	300 C
Без пружины	300 C	400 C
Высокотемпературная пружина из никелевого сплава	400 C	
Минимальная рабочая температура	50 C	50 C

Диапазон рабочих параметров

DCV1

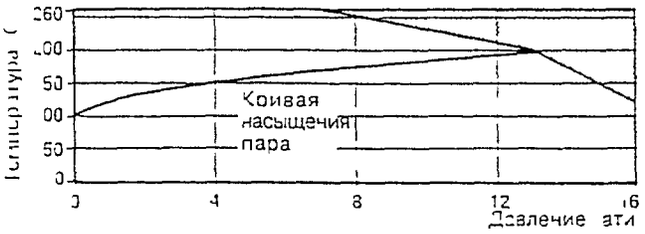

DCV 2 и DCV 3

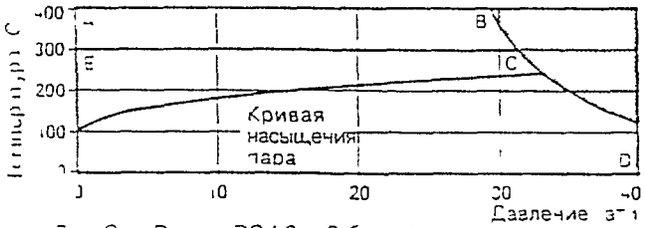

A — B — C — D — DCV 2 и 3 без пружины или DCV 3 с пружиной из никелевого сплава
E — F — C — D — DCV 2 и 3 со стандартной пружиной

Нерабочая область для данного изделия

Размеры и соединения

DN 15 20 25 32 40 50 65 80 100
DCV 1 2 и 3 могут быть установлены между E and H типа BS10 BS4504 DIN PN6 10 16 25 40 JIS 5 10 16 20 фланцевые соединения со следующими исключениями —
DN 40 50 80 и 100 — не устанавливаются между фланцевыми соединениями JIS 5
DN 65 и 80 — не устанавливаются между фланцевыми соединениями E типа BS10

Возможный выбор пружин
Жесткие пружины для схем котловой питательной воды Для размеров до DN 65 в моделях DCV1 и DCV2
Никелевый сплав для температуры для температуры выше 400 C для всех размеров только в моделях DCV3

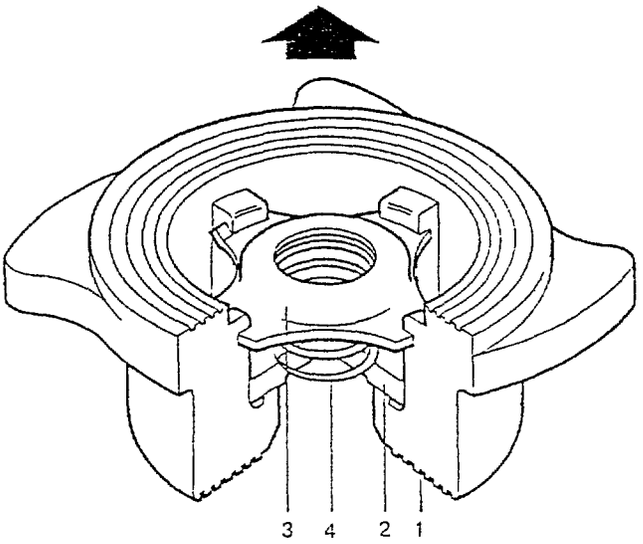

Возможный выбор мягких уплотнений

Viton (для масел и газов)—температурные ограничения 15 C до + 250°C
EPDM (для воды)—температурные ограничения 50 C до + 150 C

Материалы

N	Деталь		Материал	
1	Корпус	DCV1	Бронза	BS 2 1050
		DCV2	Ферритная нерж сталь	BS 1 4313
		DCV3	Аустенитная нерж сталь	BS 1 4581
2	Диск		Аустенитная нерж сталь	BS 1449 316 S 11
3	Седло		Аустенитная нерж сталь	BS 1449 316 S 11
4	Стандартная пружина		Аустенитная нерж сталь	BS 2056 316 S 42
	Пружина для сильных нагрузок		Аустенитная нерж сталь	BS 2056 316 S 42
	Высокотемпературная пружина		Никелевый сплав	Inconel 600

Открывающее давление, матм
Стандарт перепад давлении с нулевым Потоком и пружины из никелевого сплава

	Направление потока								
DN	15	20	25	32	40	50	65	80	100
	2.5	2.5	2.5	2.7	2.3	2.9	3.0	3.1	3.3
	22.5	22.5	22.5	23.5	24.5	24.5	25	25.5	26.5
	2.0	2.0	2.0	2.0	2.0	2.0	2.0	2.0	2.0

Там где требуется низкое значение открывающего давления возможна установка клапанов без пружин в вертикальных трубах с направлением потока снизу вверх

Без пружины
2.5 2.5 2.5 3.5 4 4.5 5 5.5 6.5
Жесткие пружины около 700 матм

Стандарты запирания

Стандартные клапаны соответствуют DIN 3230 часть 3 BN 2 Возможен заказ клапанов соответствующих DIN 3230 часть 3 BO3 Мягкие уплотнения соответствуют DIN 3230 часть 3 BN1 и BO1 и поставляются для различных перепадов давления

Стандарты

Изделие разработано и производится в соответствии с BS 7438

Использование данного изделия может быть ограничено если местными правилами эксплуатации установлены параметры ниже указанных
С целью совершенствования данного изделия мы оставляем за собой право изменять его технические характеристики
© Copyright 1994

Размеры (ориентировочные) в мм

DN	A	B	C	D	E	F	Масса кг DCV1	DCV2 и 3
5	60	43	38	6	29	6	0 13	0.11
20	69 [illegible]	53	45	9	35 7	20	0 19	0.17
[illegible]	0 [illegible]	55	55	22	44	2[illegible]	0 32	[illegible]
[illegible]	[illegible]	5	[illegible]	[illegible]	54 5	32	0 5	[illegible]
[illegible]	[illegible]		[illegible]	[illegible]		[illegible]	[illegible]	[illegible]
[illegible]	[illegible]	[illegible]	93	[illegible]	77	0	1 25	11
[illegible]	[illegible]	15	113	46	97 5	65	1 87	1 64
8	5[illegible]	[illegible]	128	[illegible]	111 5	80	2 [illegible]	2.21
100	8[illegible]	15[illegible]	148	50	130	100	3 81	3 31

Диаграмма потери давления

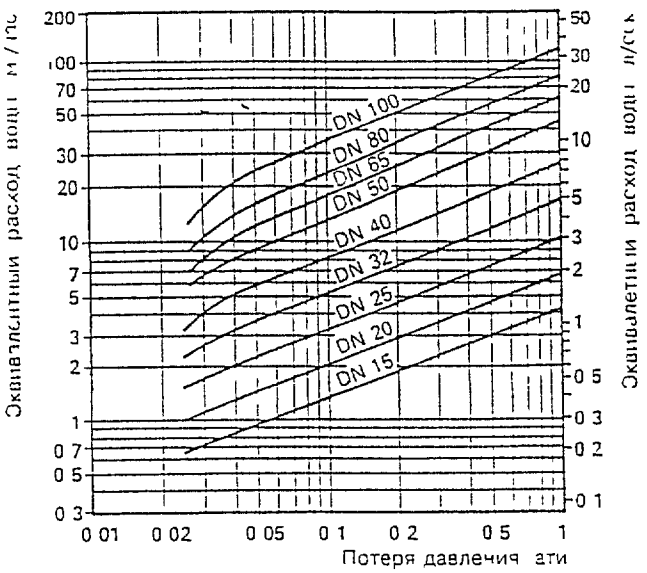

Диаграмма потери давления при открытом клапане при температуре 20 С

Указанные значения применимы для клапанов с установленными пружинами работающих в горизонтальном потоке При вертикальном потоке незначительные различия встречаются только в случае частичного открытия клапана

Графики представленные выше актуальны при температуре воды 20 С Для определения перепада давления для других жидкостей необходимо подсчитать и использовать на графике объем расхода воды эквивалентный объему расхода используемой жидкости

$$V_w = \sqrt{\frac{Q}{1000}} \; V$$

V_w = Эквивалентный объем расхода воды в л/с или м³/ч

Q = Плотность жидкости в кг/м³

V = Объем жидкости л/с или м³/ч

Информацию о перепаде давления для пара сжатого воздуха и газов можно получить в Спайракс Сарко

Обозначение в заказе

DCV 3 дисковый обратный клапан типа для установки между фланцами BS4504 PN25

Корпус клапана маркируется следующим образом

J		Пружина из никелевого сплава	Стандартный металлический диск
N	—	Без пружины	Стандартный металлический диск
H	—	Пружина для сильных нагрузок	Стандартный металлический диск
V	—	Стандартная пружина	Диск, уплотненный составом Viton
E	—	Стандартная пружина	Диск, уплотненный составом EPDM
NV	—	Без пружины	Диск, уплотненный составом Viton
NE	—	Без пружины	Диск, уплотненный составом EPDM
HV	—	Пружина для сильных нагрузок	Диск, уплотненный составом Viton
HE	—	Пружина для сильных нагрузок	Диск, уплотненный составом EPDM
T	—	Клапаны соотв. DIN 3230 часть 3 B03	

Для сочетания стандартной пружины с металлическим диском не существует соответствующей маркировки

Оформление заказа

DCV 3 DN 40 Дисковый обратный клапан Спайракс Сарко с корпусом из аустенитной стали для установки между фланцами BS10 табл E"

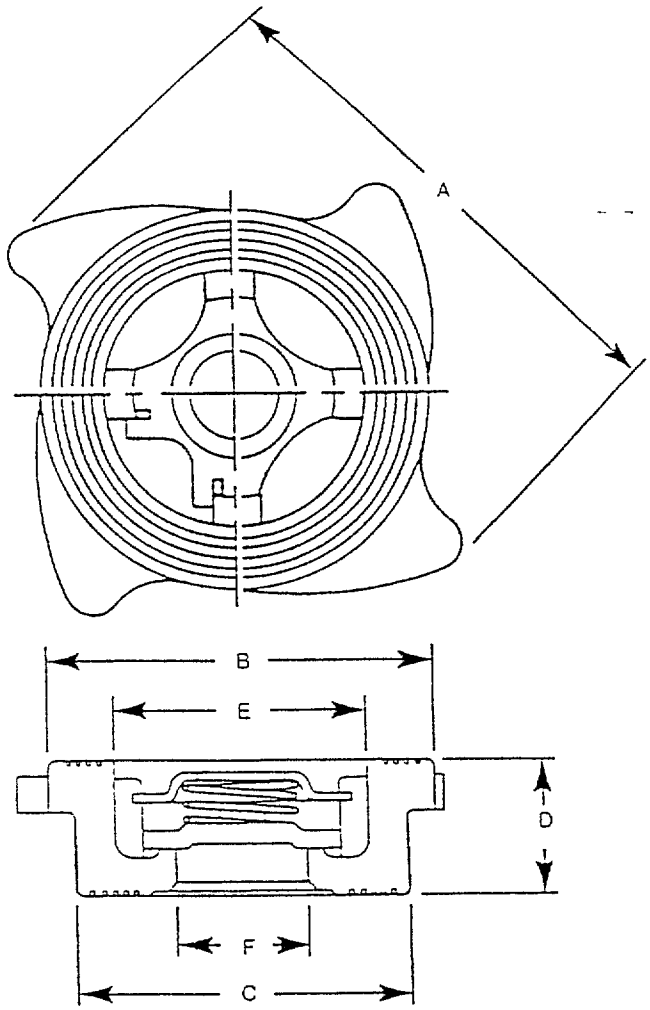

Монтаж

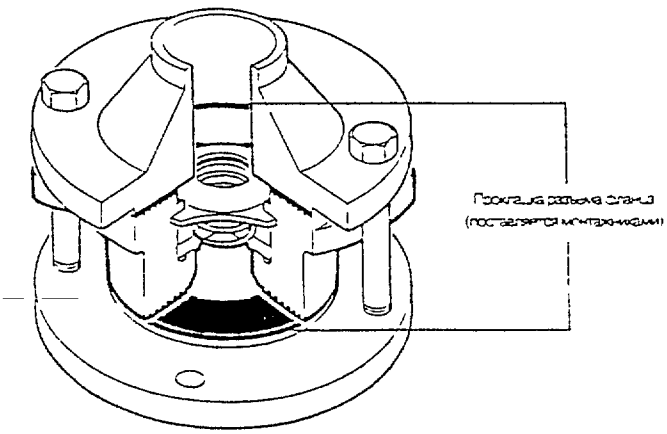

Дисковые обратные клапаны типа DCV должны устанавливаться в соответствии со стрелкой направления потока показывающей действительное направление потока среды

Клапаны с пружинами могут устанавливаться в любой плоскости Клапаны без пружин должны устанавливаться в вертикальных трубах с направлением потока снизу вверх

Дизайн корпуса позволяет приспосабливать его к различным фланцевым соединениям Для центровки клапана в трубопроводе корпус клапана поворачивается до соприкосновения с болтами разъема фланца Это подробно описано в инструкции по установке поставляемой с каждым клапаном DCV

Примечание Дисковые клапаны DCV не подходят для использования в местах с сильной пульсацией потока например поблизости от компрессора

spirax sarco

Cert ficate No FM163

ISO 9001

Изолирующие клапаны с сильфонным уплотнением А3

Описание

Фланцевые окончания и для стыковои сварки сильфонное уплотнение изолирующие клапаны для пара конденсата и водных систем

Условия ограничения

	DN15 150	DN175 300
Конструкция корпуса	PN 40	PN 25
Макс предусмотренная темпер	400 C	400 C
Макс холодный гидравл тест	60 ати	38 ати

Рабочий диапазон (PN 40) DN 15 — 150

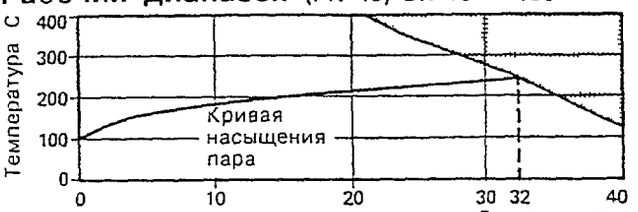

Модель PN 40 фланцевыи

Рабочий диапазон (PN 25) DN 175 — 300

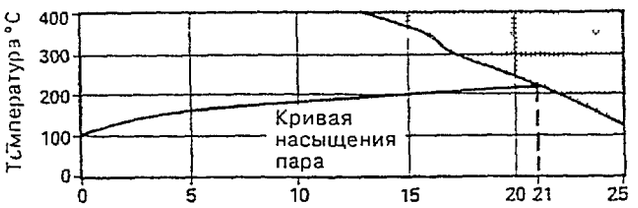

Модель PN 25 фланцевыи

Изделие не должно использоваться в этои области

Размеры и соединения

DN 15 20 25 32 40 50 65 80 100 125 150 175 200 250 300
Фланцевыи DIN 2545/BS4504 PN 40 (DN15 150)
Фланцевыи DIN 2544/BS4504 PN 25 (DN175 300)
DN 15 20 25 32 40 50 65 80 100 125 и 150
Стыковая сварка PN 40 DIN 3239 Part 1

Материалы

№	Деталь	Материал	
1	Корпус	Сталь	DIN G17245 GS C25 N
2	Крышка	Сталь (DN15 80) Сталь(DN100 200)	DIN 17200 C 22 N DIN 17245GS C25 N
3	Седло	Нержавеющая сталь	DIN 17440 X20 Cr13
4	Диск/втулка	Нержавеющая сталь	DIN 17440 X20 Cr13
5	Сильфоны	Нержавеющая сталь	DIN 17440 X10 CrNi MoTi 1810
6	Стержень	Нерж сталь	DIN 17440 X20 Cr13
7	Рукоятка	Прессованная сталь	
8	Заполнение стержня		Графит
9	Штифты крышки Гаики крышки		DIN 17240 24 Cr Mo 5 DIN 17240 Ck 35
10	Прокладка корпус/крышка	Расщепляющиися графит со вставкой из нерж стали	

Значения K_V

DN	15	20	25	32	40	50	65	80	100
	4 2	7 4	12	19	30	47	77	120	188

DN	125	150	175	200	250	300
	288	410	556	725	1145	1635

Для перевода C_V (Англ) = K_V x 0 97 C_V (США) = K_V x 1 17

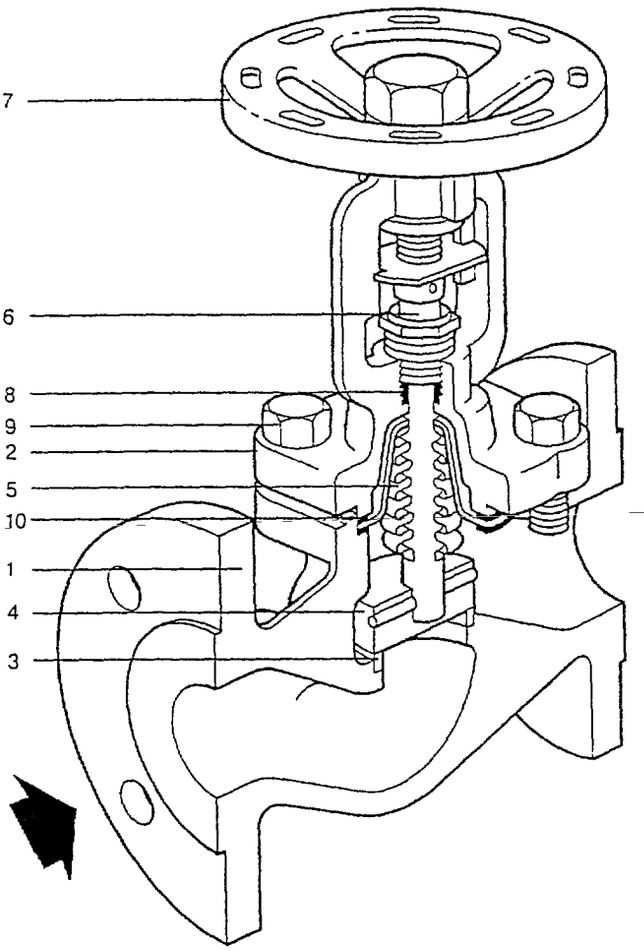

Использование данного изделия может быть ограничено если местными правилами эксплуатации установлены параметры ниже указанных.
С целью совершенствования данного изделия мы оставляем за собои право изменять его технические характеристики

© Copyright 1995

Размеры (приблизительные) мм

Фланцевыи PN40					Стыковая сварка PN40			
DN	A	B	C	Вес	A	B	C	Вес
15	130	204	140	4 3 кг	130	191	125	2 8 кг
20	150	204	140	4 8 кг	150	191	125	2 9 кг
25	160	210	140	6 6 кг	160	197	125	3 9 кг
32	180	215	140	7 8 кг	180	200	125	4 0 кг
40	200	242	140	10 кг	200	218	150	6 3 кг
50	230	244	140	13 кг	230	220	150	7 3кг
65	290	275	180	19 кг	290	238	175	12 кг
80	310	294	180	26 5 кг	310	257	225	14 7 кг
100	350	369	300	39 5 кг	350	340	300	23 6 кг
125	400	389	300	57 кг	400	360	300	40 кг
150	480	416	300	82 кг	480	390	300	56 кг
Фланцевыи PN 25								
175	550	505	400	108 кг				
200	600	530	400	168 кг				
250	730	665	520	238кг				
300	850	720	520	339кг				

Протекание седла

Коэффициент закрытия диска седла соотвестствует стандарту DIN 3230 BO1

Обозначение

DN 25 SPIRAX SARCO Тип A3 изолирующий клапан с сильфонным уплотнением фланцевыи DIN 2545 PN 40

Примечание Если перепад давления выше указанного для определенного типа необходимо использовать уравновешивающую втулку

Размер (DN)	125	150	175	200	250	300
Перепад давления (атм)	25	17	13	10	6	4

Установка

Устанавливать таким образом чтобы направление потока совпадало с направлением стрелки на корпусе рукоятка в удобном для Вас положении

Запасные части

(Цифры относятся к рисунку на противоположнои стороне)
Прокладка корпус/крышка (2 ШТ) (10)
Примечание — изделия хрупкие, обращаться осторожно
Узел стержень/сильфоны (6 5)
Диск (4)
Рукояткаl (7)
Заполнение стержня (8)

Обозначение

При заказе пользуйтесь таблицей приведенной ниже и не забываите указывать тип и размер клапана

Пример 1 Прокладка корпус/крышка для DN 15 SPIRAX SARCO изолирующего клапана с сильфонным уплотнением A3

Установка прокладки корпус/крышка

Снимите крышку с корпуса отвинтив болты
Одну прокладку можно сразу вынуть из углубления в корпусе не разбирая клапан дальше Поверхность корпуса имеющая контакт с прокладкои должна быть чистой
Чтобы заменить вторую прокладку которая находится между крышкои и упором сильфонов Отвинтите основную гайку рукоятки и снимите рукоятку Отожмите кнопку с автоблокировкой удерживающую пластинку индикации предотвращающую свободное вращение Ослабив герметизирующую гайку отвинтите и выньте стержень Установите вокруг стержня новую прокладку предварительно убедившись что поверхности упора сильфонов контактирующие с прокладкои чистые Произвести сборку в обратном порядке акуратно вставив стержень с прокладкои назад в корпус
Рекомендуемые крутящие моменты для болтов крышки

DN 15 до 32	17 мм A/F 19/23 Nm
DN 40 до 65	19 мм A/F 33/37 Nm
DN 80 и 100	24 мм A/F 80/85 Nm
DN 125 до 175	24 мм A/F 70/90 Nm
DN 200	30 мм A/F 150/175 Nm
DN 250 и 300	36 мм A/F 240/280Nm

Рекомендуется производить затягивание болтов крышки до указанных крутящих моментов после каждых 24 часов работы

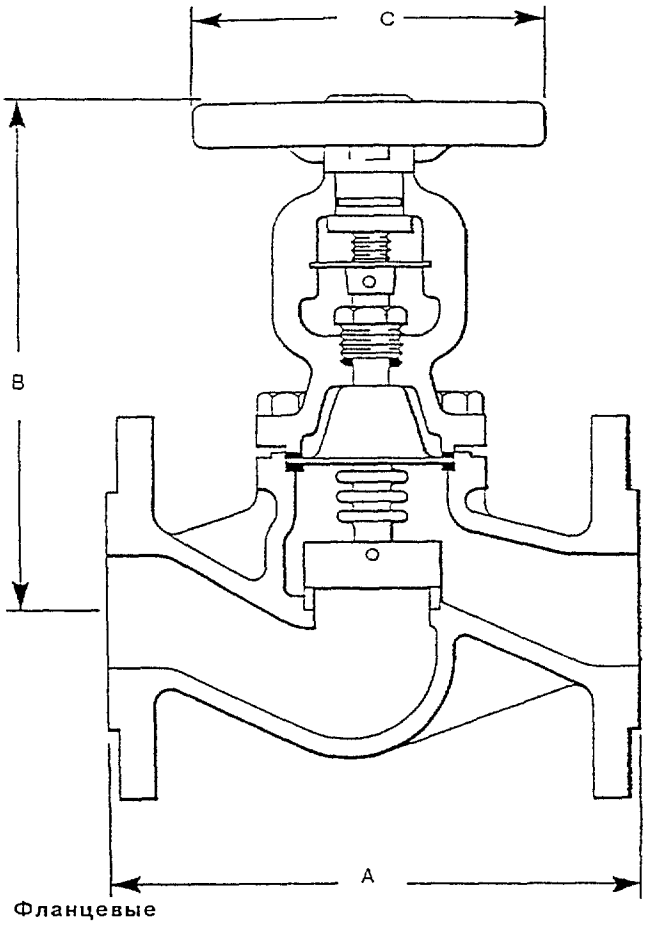

Фланцевые окончания

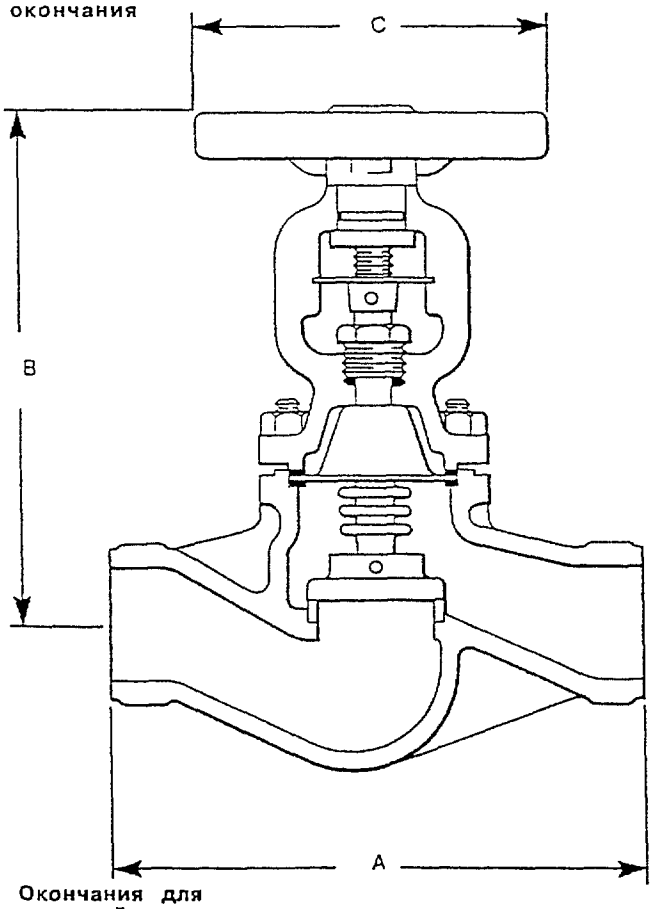

Окончания для стыковой сварки

spirax sarco

Клапан чугунный типа КА31, КА33, КВ31, КВ33 и КС31
(КА31, КА33, КВ31, КВ33 and КС31 Cast Iron Valve)

Выпускаемые типы (Available types)

КА31 - нормально открытый односедельный, с резьбовым соединением
КА33 - нормально открытый односедельный, с фланцевым соединением
КВ31 нормально открытый односедельный с балансировочным сильфоном из фосфористой бронзы с резьбовым соединением
КВ33 нормально открытый односедельный с балансировочным сильфоном из фосфористой бронзы с фланцевым соединением
КС31 нормально открытый односедельный с балансировочным сильфоном из нержавеющей стали с резьбовым соединением

Уравнивающий давления сильфон позволяет использовать клапан при повышенных перепадах давления

Ограничение применения (Limiting conditions)

Максимальное падение давления

Размер/DN	КА 31/33	КВ 31/33	КС 31
15	13 бар		
20	10 3 бар		
25	4 5 бар	10 3 бар	
32	3 бар	9 бар	
40	2 бар	8 2 бар	13 бар
50	1 5 бар	6 9 бар	13 бар

Максимальное давление в корпусе
16 бар при 120 C
13 бар при 220 °C
Максимальное давление холодного гидравлического испытания 24 бар

Соединительные размеры и резьбы (Sizes and pipe connections)

КА31 типоразмеры 15 20 25 32 40 и 50
КВ31 типоразмеры 25 32 40 и 50
КС31 типоразмеры 40 и 50
КА33 типоразмеры 25 32 40 и 50 Фланцевое соединение как указано ниже
КВ33 типоразмеры 25 32 40 и 50 Фланцевое соединение как указано ниже

Стандартные фланцы согласно BS 4504 и нормали PN16 DIN табл F стандарта BS

Материалы (Materials)

№	Деталь	Материал	
1	Корпус	Чугун	DIN 1691 GG 20
2	Стакан КА КВ	Чугун	DIN 1691 GG 20
	КС	Сталь	DIN 17245 GSC 25
3	Орган запорный клапана	Сталь нерж	BS 970 431 S 29
4	Кольцо седла клапана	Сталь нерж	BS 970 431 S 29
5	Прокладка седла клапана		
	с DN 15 по DN 25	Сталь малоуглеродистая	BS 1449 CS 4
	с DN 32 по DN 50	Графит листовой армированный	
6	Пружина возвратная	Сталь нерж	BS 2056 302 S 26
7	Шток КА КВ	Латунь	BS 2874 CZ 121
	КС	Сталь нерж	BS 970 321 S20
8	Прокладка стакана	Графит листовой армированный	
12	Шпилька стакана	Сталь	BS 4439 Gr 8 8
	Гайка стакана		BS 3692 Gr 8
	DN 32 и 40	M10 x 35 мм	
	DN 50	M12 x 35 мм	
13	Сильфон КВ	Бронза фосфористая	
	КС	Сталь нерж	AISI 316 L
14	Прокладка сильфона	Графит листовой армированный	
15	Втулка стакана	Латунь	BS 2874 CZ 121
16	Плунжер	Латунь	BS 2874 CZ 121

Установка (Installation)

Клапан должен устанавливаться на горизонтальном трубопроводе так чтобы рабочий орган располагался вертикально ниже трубопровода Детальная инструкция придается к каждому клапану

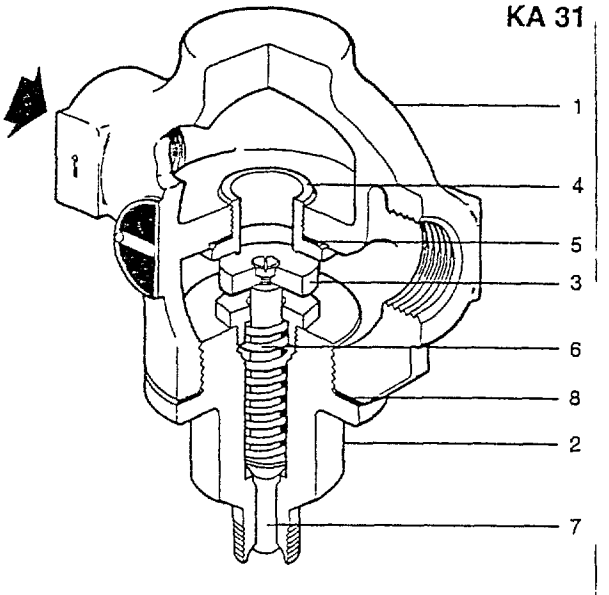

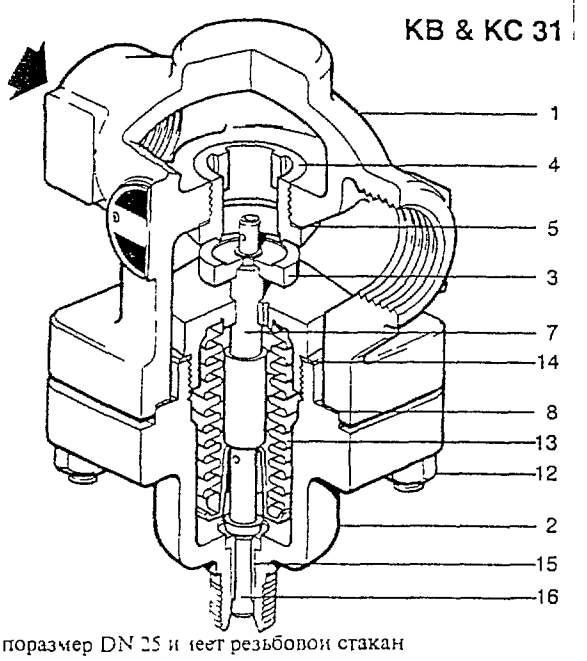

Типоразмер DN 25 имеет резьбовой стакан (только в типе КВ)

Значения коэффициента Kv (Kv values)

DN	15	20	25	32	40	50
КА КВ	2 9	4 64	9 8	16 48	25 7	34
КС					20	34

Для перевода Cv (Великобр) = Kv x 0 97
Cv (США) = Kv x 1 17

Типоразмеры для пара см TI GCH 03 (TIS 1 011)
для воды см TI GCH 04 (TIS 1 012)

Обозначение (How to specify)

1 Клапан типа КА 31 SPIRAX SARCO с чугунным корпусом типоразмера DN 32 с резьбовым соединением BSP

Местные правила эксплуатации могут ограничивать использование этого изделия значениями параметров ниже указанных
Для совершенствования данного изделия мы оставляем за собой право изменять его технические характеристики

Авторское право 1994г

Размеры (ориентировочные), мм (Dimensions)

Размер/DN		PN 16	BS10 F			Вес	
КА31/33	A	B	B	C	D	Резьб	Флан
15	90	130	130	105	37	1 3кг	3 3кг
20	104	150	147	105	37	1 6кг	4 3кг
25	136	160	157	107	51	3 2кг	5 7кг
32	144	180	180	110		5 1кг	8 8кг
40	150	200	200	110		6 3кг	11 0кг
50	180	230	230	110		7 8кг	13 0кг
КВ31/33 и КС31							
25	136	160	157	138	51	3 4кг	5 9кг
32	144	180	180	152	51	5 7кг	9 1кг
40	150	200	200	152	62	6 9кг	11 2кг
50	180	230	230	152	71	8 8кг	13 4кг

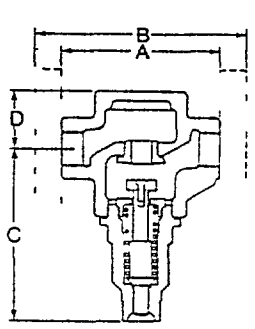

КА 31

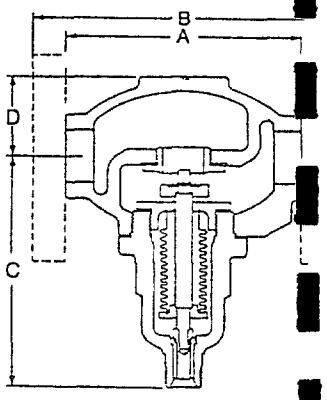

КВ & КС

Запасные части (Spare parts)

Поставляются запчасти показанные сплошными линиями Запчасти нарисованные штриховыми линиями не поставляются

КА31 и 33

ПОСТАВЛЯЕМЫЕ ЗАПЧАСТИ	
Узел седла клапана	A D E L
Набор прокладок полный	E L
Набор шпилек и гаек стакана (по 4 шт)	S
КВ31 33 и КС31	
Узел седла клапана	A B C D E
(исключая узел сильфона и штока)	L,U G
Узел сильфона и штока	G L N H
Набор прокладок полный	B C E L U,G
Набор шпилек и гаек стакана (по 4 шт)	S

Оформление заказа (How to order)

Всегда при заказе используйте наименования из столбца Поставляемые запчасти указывая размер и тип клапана

Пример 1 Узел седла клапана для клапана КВ 31 SPIRAX SARCO типоразмера DN 32

Общее обслуживание (How to fit general)

Снять датчик контроля системы с места его установки и дать ему остыть

Отключить привод от клапана

Перед началом любого ремонта клапана убедиться что он полностью отключен

Всегда важно произвести полную замену узлов перечисленных выше и убедиться что все контактные поверхности чистые

Замена узла седла клапана (To replace valve seat assembly)

Снять узел стакана и выкрутить из стакана запорный орган/направляющую штока (X)

КА31 Теперь можно извлечь весь узел запорного органа/направляющей штока и заменить его новым узлом

КВ31 КС31 Снять пружинное кольцо (C) шайбу (U) запорный орган (A) и седло (B) и собрать все детали в обратном порядке убедившись что пружинное кольцо правильно установлено в пазу

Выкрутить кольцо седла клапана (D) и заменить его новым кольцом с прокладкой седла Перед сборкой смазать все прокладки тонким слоем соответствующего уплотнительного компаунда Поставить на место узел стакана с новыми прокладками При сборке клапанов типоразмеров DN 32 и выше следить за равномерной затяжкой гаек стакана

Замена узла сильфона (To replace bellow assembly)

Снять узел стакана и узел сильфона выкрутив направляющую (X) узла сильфона Снять пружинное кольцо (C) шайбу (U) запорный орган (A) и седло (B) и в обратном порядке поставить новый сильфонный узел

Установить новый узел сильфона и сдвинуть плунжер седла к стакану клапана

Поставить на место узел стакана с новыми прокладками обращая внимание на то чтобы при сборке клапанов типоразмеров DN 32 и выше равномерно затягивать гайки стакана

Рекомендуемые крутящие моменты затяжки приведены ниже

Размер	DN 15	DN 20	DN 25	DN 32	DN 40	DN 50
	50Нм	110Нм	160Нм	100Нм	150Нм	165 Нм
	90Нм	150Нм	200Нм	40Нм	40Нм	60Нм
			105Нм	180Нм	180Нм	200Нм

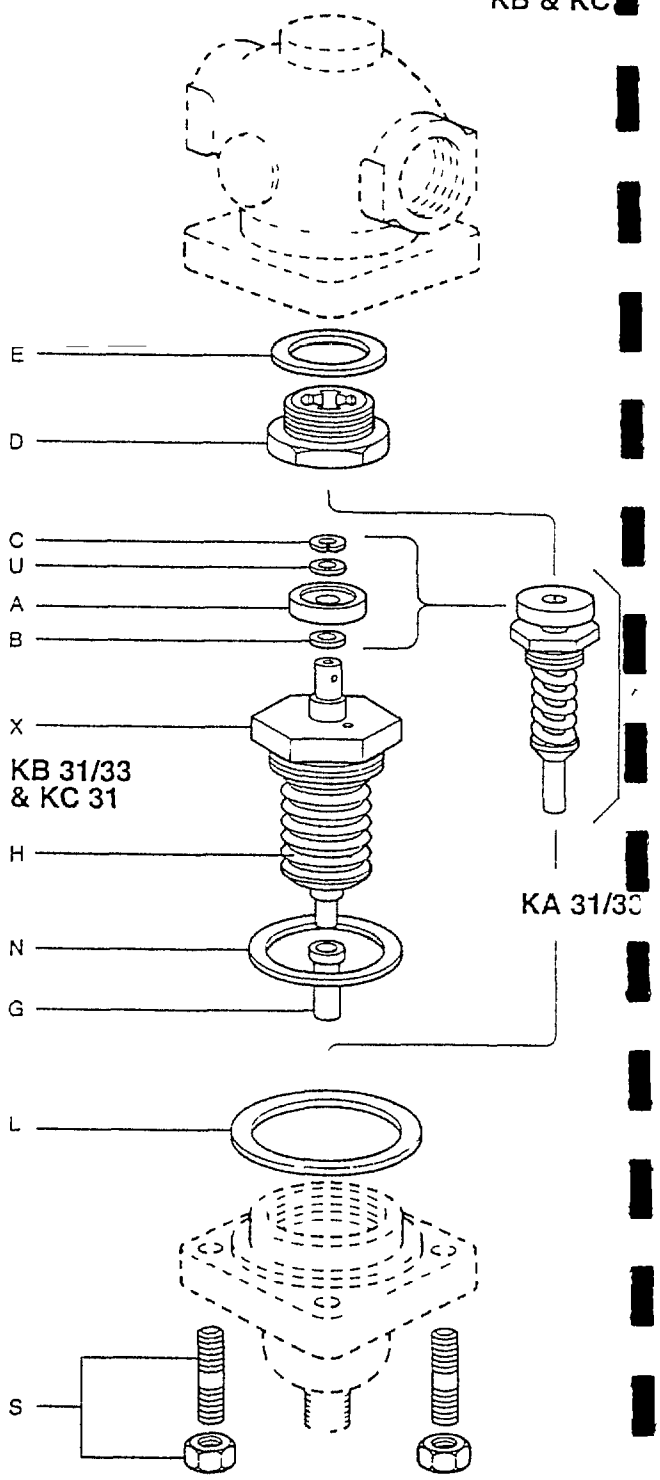

КОНДЕНСАТООТВОДЧИК ПОПЛАВКОВО-ГИДРОДИНАМИЧЕСКИЙ /КПГД/

Предназначен для отвода конденсата от пароиспользующего оборудования и устранения проскоков пара в конденсатную линию

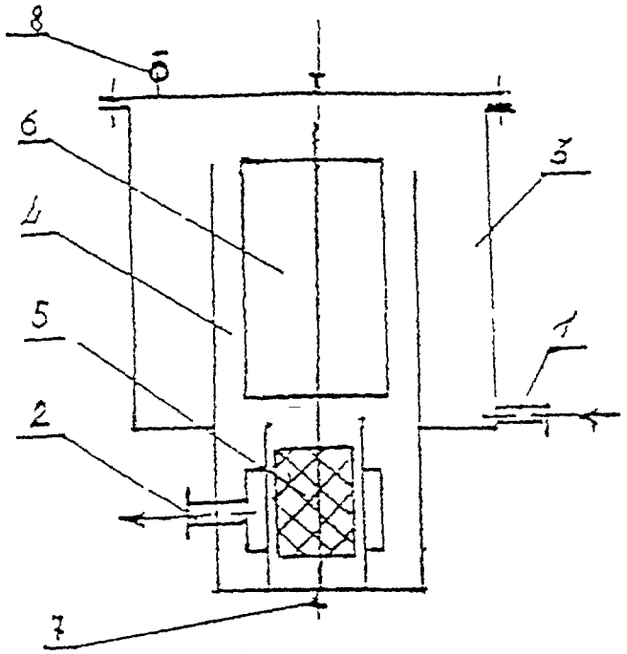

1 Вход парокоздушной смеси
2 Отвод конденсата
3 Гидрозатвор
4 Рабочая камера
5 Запорно-дросселирующий поршень
6 Поплавок
7 Регулировочные болты
8 Воздушный клапан

Рис 1

ТЕХНИЧЕСКАЯ ХАРАКТЕРИСТИКА

Характеристика конденсатоотводчиков	Марка и номер КПГД				
	1	1м	2	3	3м
Максимальное рабочее давление, атм	10	25	16	10	16
Производительность, т/ч	0,01 - 2,5		2,5 - 6	5 - 20	
Диаметр патрубков входа и выхода, мм	25		32	50	
Срок окупаемости, час	50 - 200		50 - 70	30 - 55	
Габариты, мм	360x290x250		400x330x250	430x360x320	
Масса, кг, в т ч	19	40	45	50	65
корпус (ст 3)	17,8	38,8	43,3	47,8	62,8
запорно-дросселир орган (ст нерж)	1,2	1,2	1,7	2,2	2,2

Диаметры входного и выходного патрубка по желанию заказчика могут быть изменены

Энергия

343820, Донецкая область,
г Енакиево-6, пр Забойщиков, 35,
для писем г Енакиево - 5, а/я N 3,
Банковские реквизиты
р/с **1467641** в Укрсоцбанке Енакиево,
МФО **334527**, *код ОКПО* **23417530**
тел/факс (06252) 2-67-60, 2-59-17

Ж/д реквизиты	код предприятия по ж/д 6511
для контейнеров	ст Щебечка Донецкой ж/д, код станции 488509
для вагонов	ст Енакиево Донецкой ж/д, код станции 488706

№_____ от ____ _____199__г

Реализуем со склада в г Енакиево контрольно - измерительные приборы, средства автоматизации, энергетическое и котельное оборудование заводов системы "Промприбор"

№	Наименование	Тип	Цена, грн	Примечание
		АВТОМАТИКА БЕЗОПАСНОСТИ КОТЛОВ		
1	Комплект средств управления (БУС БКЭ БКП датчики клапана)	КСУМ-2П-Г2	4300	паровой (газ низкого давления)
		КСУМ 2П-Г5	4300	водогрейный (газ низкого давления)
2	Система автоматизации котлов (автоматика безопасности)	АМКО-К-1	3250	водогрейный (газ низкого давления)
		АМКО-К-4	3300	паровой (газ низкого давления)
		ЗАПАЛЬНО - ЗАЩИТНЫЕ УСТРОЙСТВА И З/Ч		
3	Комплект розжига и контроля пламени	КРиК-2-00 (КЗУ-1)	1100	Блок управлен трансформ розжига ЭЗ-01 ФД КГ-10
4	Запально - защитное устройство	ЗЗУ - 6	530	
5	Электрозапальник	ЭЗ - 01	175	L= до 800мм
6	Фотодатчик	ФД - 1	90	фоторезистор ФР 1 (150 кОм)
7	Контрольный электрод	КЭ - 00	90	L=400мм
8	Клапан газовый	КГ - 10	180	отсекание газа на запальнике
		ДАТЧИКИ		
9	Малогабаритный датчик-реле - напора (газ вода воздух)	ДН - 2 5	130	0 04 - 2 5 кПа(4-250 кгс/м кв)
		ДН - 6	125	0 6 - 6 кПа(60-600 кгс/м кв)
		ДН - 40	130	0 4 - 40 кПа(40-4000 кгс/м кв)
	тяги	ДТ - 2 5	120	0 04 - 2 5 кПа (4-250 кгс/м кв)
		ДТ - 40	120	0 4 - 40 кПа (40-4000 кгс м кв)
	- давления	ДД 0 25	115	0 - 0 25 МПа (0-2 5 кгс/см кв)
		ДД 1 6	125	0 2 - 1 6 МПа (2-16 кгс/см кв)
	- перепада напора	ДПН - 2 5	140	0 1 2 5 кПа (10-250 кгс м кв)
	- напора и тяги	ДНТ 1	145	0 1- 0 -1 0 кПа (10-0-100кгс м кв)
		ДНТ 100	138	0 1- 0 -1 0 кПа (10-0-100кгс/м кв)
		ДЭМ 107	350	0 15-0-0 15 кПа (15-0-15кгс/м кв)
		МЕХАНИЗМЫ ИСПОЛНИТЕЛЬНЫЕ		
10	Механизм электрический однооборотный МЭО	МЭО 16/25 0 25и - 90	648	220 В
		МЭО 16/25 0 25р 90	645	220 В
		МЭО 16/63 0 25и - 90	655	220 В
		МЭО 100/25 0 25и 87	1200	380 В
		МЭО 100/25 0 25р 87	1200	380 В
		МЭО 250/25 0 25и 87	1350	380 В
		МЭО 250/63 0 25и 87	1350	380 В
11	Пускатель бесконтактный реверсивный	ПБР - 2М	270	220 В
		ПБР 3А	320	380 В
		СЧЕТЧИКИ ГАЗА		
12	Счетчик газа турбинный	СГ 80 160 - 0 4	1450	Pmax=0 4 МПа Qmax= 250 m³/ч
		СГ-150 - 650 -1 6	1900	Pmax=1 6 МПа Qmax= 1000 m³/ч
		СГ 200 - 1600 0 63	2600	Pmax=0 63МПа Qmax= 2500 m³/ч
	ротационный	РГ 20	-	Ру=0 1 МПа Qном=20 m³/ч
		РГ 40	850	Ру=0 1 МПа Qном=40 m³/ч
		РГ 100	1000	Ру=0 1 МПа Qном=100 m³/ч
		РГ 400	1200	Ру=0 1 МПа Qном=400 m³/ч
		РГ 600	1300	Ру=0 1 МПа Qном=600 m³/ч
		РГ 1000	1800	Ру=0 1 МПа Qном=1000 m³/ч

15 05

		ПРИБОРЫ КОНТРОЛЯ И РЕГУЛИРОВАНИЯ ТЕМПЕРАТУРЫ		
13	Устройство терморегулирующее	ТУДЭ-1М1	70	L=251 491мм (-60 +40°С)
		ТУДЭ-2М1	70	L=251 мм (0 + 100°С)
14	Термопара	ТХК 0806 625-07 ХК (L) 2	60	(0 +600°С) L= 200мм
		ТХК 2388 064-40 ХК (L) 2	60	(-40 +600°С) L= 400мм
		ТХК 0806 625-09 ХК (L) 2	60	(0 +600°С L=400мм
		ТХА 0806 625- ХА (К) 2	60	(0 +1000°С) L=160мм
		ТХА 0806 625-03 ХА (К) 2	60	(0 +1000°С) L=400мм
		ТХА 2388 06431 ХА(К) 2	60	(0 +800°С) L=320мм
15	Термопреобразователь сопротивл	ТСМ 0879 100 М / С 2	60	(-50 +200°С) L=120мм
		СИГНАЛИЗИРУЮЩИЕ И ПОКАЗЫВАЮЩИЕ ПРИБОРЫ		
16	Напоромер	НМП-100 У3	270	Ру = (0 - 4 кПа)
17	Манометр	МП-60 Ру=0- 25 250кгс/см²	36	Кислородный Ø=63мм
		МП-60У Ру=0 - 25 кгс/см²	36	Общепромышленный Ø=63мм
		КГМ - 100	35	Ру=0 - 4 6 кгс/см²
		МТП - 100	45	Ру=0 - 4 6 25 кгс/см²
18	Манометр самопишущий	МТС -711	220	Ру=0 - 0 6 25 кгс/см² эл прив
		МТС 712	230	Ру=0 - 1 60 250 кгс см² мех прив
19	Дифманометр (преобразователь разности давления)	ДМ - 3583 М (с ЗИП)	305	Ру=1 6 2 5 4 6 3 10 16 25 40 63 630 кПа
20	Преобразователь разряжения	Сапфир - 22	780	мод 2210-ДВ-Ех Ру=0 4 кПа
		СУЖАЮЩИЕ УСТРОЙСТВА		
21	Диафрагма камерная	ДКС	184	Ру=0 6 - 10 МПа Ду=50 80 150 200мм
		БЛОКИ УПРАВЛЕНИЯ И ПИТАНИЯ		
22	Блок извлечения корня	БИК-1к	288	(0 - 5 мА 4 -20мА)
23	Блок питания	22 БП - 36	184	1-но канальный
		-- / --	282	2-х канальный
		- --	332	4-х канальный
		- --	367	8- ми канальный
24	Блок питания и сопряжения	Б П С - 300	522	2-х канальный
25	Блок сопряжения сигнала	Б С С - 24	498	
		АППАРАТУРА РАБОТАЮЩАЯ ПОД ДАВЛЕНИЕМ		
26	Сосуд уравнительный	СУ	80	Ру=6 3 МПа
27	Стекло водоуказательное (рифленое гладкое) для контроля уровня воды в верхнем барабане котла	№2	25	L=140 x 34 x 17 мм
		№3	18	L=160 x 34 x 17 мм
		№4	25	L=190 x 34 x 17 мм
		№5	28	L=220 x 34 x 17 мм
		№6	35	L=250 x 34 x 17 мм
		№7	30	L=280 x 34 x 17 мм
		№8	20	L=320 x 34 x 17 мм
		№9	25	L=340 x 34 x 17 мм
		РЕГУЛЯТОРЫ И КЛАПАНА ДЛЯ СИСТЕМ ГОРЯЧЕГО ВОДОСНАБЖЕНИЯ		
28	Регулятор давления (горяч Вода)	РД - 3М	675	0 06 - 0 25 0 1 - 0 6 0 4 -1 6 МПа
29	Регулятор расхода и давления универсальный (на горячую воду)	УРРД- М Ду=25 мм	715	Р = 1 6 МПа t= до180 С
		УРРД М Ду=80 мм	815	Р = 1 6 МПа t= до180 С
30	Клапан регулирующий	РК-1М Ду=80 мм	950	Ру=1 6 МПа t= до 180 С (вода пар)
31	Регулятор температуры горячего водоснабжения	РТ ГВ - 1 Ду=50 мм	860	Q=25 м куб час t= до180 С
		РТ ГВ 1 Ду=80 мм	880	Q=50 м куб час t= до180 С
32	Клапан питания котлов	КРП - 50М	350	Ру=1 6 МПа t=до180 С вода
33	Электромагнитный вентиль (г Семенов)	СВМ - ду 25 мм	220	Ру= 16 кгс см
		СВМ - ду 50 мм	320	Ру= 16 кгс см
		СВМ - ду 65 мм	380	Ру= 16 кгс см
34	Распылительный колпачок		15	для ХВО (керамика)
35	Кнопочный пост	ПКЕ 222	10	U = 660 V I = 16 A

Надеемся на взаимовыгодное сотрудничество

С уважением

коммерческий директор Клишина Любовь Васильевна

телефон / факс (06252) 2-67-60, 2-59-17

BEST AVAILABLE COPY

96

АО Укрэкотпосервис

Донецк [illegible] Вороверо [illegible]
тел (0622) 60 [illegible] факс 60 [illegible]

ПРАЙС ЛИСТ
на насосы электродвигатели приборы КИПиА
предлагаемые к реализации

Наименование	Подача м³/ч	Напор	Мощность дв кВт об/мин	Цена с НДС гривни
Насос ЦСП [illegible] предназначен для перекачки светлых нефтепродуктов	[illegible]	[illegible]	[illegible]/2950	[illegible]
Трехвинтовой электронасос [illegible] А [illegible] предназначены для перекачки нефтепродуктов и дистиллятов				
А2 [illegible] 90	90	[illegible]	[illegible]	[illegible]
А2 В [illegible]/25	[illegible]	[illegible]	[illegible]	[illegible]
А1 [illegible]/25	[illegible]	[illegible]	[illegible]/2900	2 [illegible]
[illegible]	20	[illegible]		
Центробежные горизонтальные [illegible] консольного типа НКУ предназначены для [illegible]				
НК [illegible]	[illegible]	[illegible]	б/дв	[illegible]
Поршневые насосы [illegible] ПДВ предназначены для перекачки пресной [illegible] воды [illegible] нефтепродуктов				
ПДВ [illegible]/20	[illegible]	[illegible]		[illegible]
ПДВ 25 [illegible]	[illegible]	[illegible]		[illegible]
Дозировочные насосы типа НД предназначены для объемного напорного дозирования нейтральных и агрессивных жидкостей				
НД [illegible]	16	[illegible]	[illegible]/1500	9[illegible]
НД [illegible]/2[illegible]	[illegible]	[illegible]	[illegible]/1500	[illegible]
НД [illegible]	100	[illegible]	[illegible]/1500	[illegible]
Центробежные консольные [illegible] предназначены для перекачивания [illegible] чистой воды				
[illegible]	[illegible]	[illegible]	[illegible]	[illegible]
К [illegible]	[illegible]		[illegible]	[illegible]
К [illegible] (К 90/[illegible])	90	[illegible]	[illegible]/2900	2 800 [illegible]
К [illegible] (К 30 [illegible])	[illegible]	[illegible]	[illegible]/2900	1 120 [illegible]
К [illegible] (К [illegible] 200)	[illegible]	50	[illegible]/2900	1 900 [illegible]
К [illegible] (К 20/30)	[illegible]	[illegible]	б/дв	560 [illegible]
К [illegible]	[illegible]	[illegible]	б/дв	[illegible]
К [illegible]	[illegible]	[illegible]	б/дв	90[illegible]
К [illegible] ПВ [illegible]	[illegible]	50	[illegible] 000	[illegible]
ГВ [illegible] 200				
[illegible] 100 [illegible] 200)	00	[illegible]	[illegible]/2900	[illegible]
НЦГ [illegible] (К 20/30)	[illegible]	[illegible]	[illegible]/2900	[illegible]
НЦГ [illegible]	[illegible]	[illegible]	[illegible]/2900	[illegible]
[illegible] 50				
Центробежные моноблочные электронасосы типа КМ и КМП горизонтальные одноступенчатые предназначены для перекачивания воды				
КМ [illegible] 100	100	[illegible]	[illegible]/2900	[illegible]
КМП [illegible] 60	[illegible]	[illegible]	[illegible] 000	90[illegible]
Насос [illegible]				905 [illegible]
Насос [illegible] для [illegible] Р 2 [illegible]	[illegible]		[illegible]	[illegible]
Насос [illegible] предназначен для перекачки пресной воды	[illegible]	[illegible]	[illegible]	[illegible]
Агрегаты насосные [illegible] предназначены для подачи воды [illegible] жидкостей со взвешенными частицами типа АНС				
НШС 100/[illegible]	[illegible]	50	[illegible]/1470	[illegible]
НШС [illegible]	[illegible]	60	б/дв	[illegible]
АНС 60	60	16	[illegible]/3000	[illegible] 30
Шестеренчатый насос для перекачки нефтепродуктов				
[illegible]	[illegible]	[illegible]	[illegible]	[illegible]
Центробежные [illegible] насосы типа ПЭ предназначены для подачи питательной воды [illegible] прямоточные стационарные паровые котлы [illegible] МПа				
ПЭ [illegible]/250	[illegible]	[illegible]	[illegible]/2940	[illegible]
Центробежные насосы двухстороннего входа типа Д с полуспиральным подводом жидкости к рабочему колесу				
Д [illegible]20/5[illegible] дв	[illegible]20	[illegible]	[illegible]/1[illegible]	[illegible]
АНЦ П 9 [illegible]/400/Д [illegible]20/50	[illegible]20	[illegible]	б/дв	2 000 [illegible]
С [illegible]9м	[illegible]	[illegible]	[illegible]/3000	[illegible]

Наименование	Цена с НДС гривни
Электродвигатели	
АИМ [illegible]	[illegible]
АИМ [illegible]	[illegible]
АИМ [illegible]	[illegible]
АИМ [illegible]	[illegible]
АИМ [illegible]	[illegible]
АИМ [illegible]	[illegible] 60
АИМ [illegible]	[illegible] 00
АИМ 90 [illegible]	[illegible]
[illegible]	[illegible]
АИМ [illegible]	[illegible]
[illegible]	[illegible]
[illegible]	[illegible]
[illegible]	[illegible]
[illegible]	[illegible]
[illegible]	[illegible]
Оборудование КИПиА	
ТСП [illegible]	[illegible]
ТСМ [illegible]	[illegible]
Датчики [illegible]	
[illegible]	[illegible]
МЭО [illegible]	
[illegible]	[illegible]
[illegible]	[illegible]
[illegible]	[illegible]
[illegible]	[illegible]
[illegible]	[illegible] 00
КСП	[illegible] 00
КСМ	[illegible] 00
[illegible] 60	[illegible]
[illegible]	[illegible]
[illegible]	[illegible]
КСУ [illegible]	[illegible]
Датчик [illegible]	
[illegible]	[illegible]
[illegible]	[illegible]
[illegible]	[illegible]
Водогрейные [illegible] паровые [illegible]	
[illegible]	[illegible]
[illegible]	[illegible]
СТД [illegible]	[illegible]
СТД [illegible]	[illegible]
СТД [illegible]	[illegible]
Охладитель [illegible]	[illegible]
Производство [illegible] для приготовления бетонного раствора	[illegible]
Паровые [illegible] установки [illegible]	[illegible]
ГСТО [illegible]	[illegible]

Цены договорные Стоимость [illegible] монтажные [illegible] выполняются силами управления [illegible] предусмотрена система скидок

[illegible] Донецк
ул Вороверо [illegible]

BEST AVAILABLE COPY

91

НАУКОВО-ВИРОБНИЧЕ ОБ'ЄДНАННЯ
ТЕРМОПРИЛАД
THERMOPRYLAD

Україна 290053 Львів Наукова, 3

Ukraina 290053 Lviv Naukova 3

337/303 13 10 97

Державному постачальнику теплотехнічного устаткування Державного комітету з енергозбереження
- Державне 3 0.

Про надання відповіді на запит Державного комітету з енергозбереження

Науково-виробниче об'єднання "Термоприлад" на протязі більше 40 років спеціалізується по виготовленню і розробці засобів вимірювання, контролю регулювання, сигналізації температури та їх методологічного і метрологічного забезпечення в температурному діапазоні від -270 до 4000 С

Наше об'єднання запропонує Вам варіанти заміни зарубіжних приладів температурного контролю, а також виготовить прилади нестандартних та старих типів градуювань

Об'єднання разом з чеською фірмою випускає теплолічильники

Направляємо Вам Номенклатурний перелік, проспекти виробів, які випускає наше об'єднання.

Умови поставки приладів і ціни - договірні, можливий бартер

Просимо повідомити про Вашу зацікавленість в нашій продукції, а також висловити свої пропозиції по співпраці і використанню Ваших виробів

При відповіді просимо посилатися на наш вих N 337/-3 від 13 10 97

Додаток інформація - прим

З повагою
Генеральний директор В Лах

тел 38(0322)63-21-14, 39-07-29
Білоус Богдан Теодорович

-723
17 11 7

Тел/Tel (0322) 35-30-43
Факс/Fax (0322) 63-13-61
Телетайп 754202 СВОД
bj@therm.lviv.ua

Р/р 467043 в акціонерно-комерційному банку «Львів» м Львова, МФО 325268
індекс 290005, ЗКПО - 04850451

"Лебедриладъ
(0322) 394 496
Фимаева

П Р Е Й С К У Р А Н Т Ц І Н

на продукцію виробничо-технічного призначення

станом на 5 грудня 1996 року

Найменування виробів	Діюча ціна на 5 грудня 1996 р			
	оптова в грв	відпускна в грв	оптова в рос.руб	в дол США
Прилади КС-01				
КСП2-01-047,048 049-068	700-00	840-00	2520000	457
КСП2-01-004,005,016,038,042, 043,045,046	550-00	660-00	1980000	360
КСП2-01-070 071 081	650-00	780-00	2340000	425
КСП2-01-001,031,032,082	800-00	960-00	2880000	523
КСП2-01-026,027,028	700-00	840-00	2520000	458
КСМ2-01-003,004,038,042,050-052	550-00	660-00	1980000	360
КСМ2-01-079,080,091	600-00	720-00	2160000	392
КСМ2-01-018-023	700-00	840-00	2520000	458
КСМ2-01-053-076	750-00	900-00	2700000	490
КСМ2-01-028-030,092	900-00	1080-00	3240000	588
КСУ2-01-003 004,047,068, 072,076,080	550-00	660-00	1980000	360
КСУ2-01-014,056	600-00	720-00	2160000	392
КСУ2-01-025-027,039-041, 081-089,090-098	550-00	660-00	1980000	360
КСУ2-01-030-032,042-044	850-00	1020-00	3060000	556
КСД2-01-003,004,043 044,051, 052	550-00	660-00	1980000	360
КСД2-01-023,024,027,028	600-00	720-00	2160000	392
КСД2-01-055,056,067,068,075, 076,078,080	650-00	780-00	2340000	425
Прилади РП				
РП160-однокан без с п 00002,04,08,12,14,16,18	680-00	816-00	2448000	445
РП160однокан з с п 01,03, 05 07 09 13,15,17,19	720-00	864-00	2592000	471
РП160-багатокан без с п 50 52,54 58,64,66,68,62	1500-00	1800-00	5400000	980
РП160-багатокан з с п 51 53,55,59,63,65,67,69	1583-00	1900-00	5700000	1040
РП160-10 АД однокан	2350-00	2820-00	8450000	1[illegible]
РП160-20 АД багатокан -11,12,14	3200-00	3840-00	9300000	1689
РП160-20 АД багатокан -13	3700-00	4440-00	10800000	1961
РП160-31 струм вих без с п 20 22 24,26	780-00	936-00	2808000	510
РП160-31 струм вих з с п. 21,23,25,27	950-00	1140-00	3420000	621
РП160-30-37,28,29,38,39	1083-00	1300-00	3900000	700
РП160-РС-3010	1320-00	1584-00	4752000	863
РП160-з розд задач-70-78	1917-00	2300-00	6900000	1255
РП250 Д днокан 00-03,06,07, 09,10 12,13,15,16,18-21,24,25	1000-00	1200-00	3600000	655
РП250 Д однокан -04,05,08, 11,14,17,22,23,26,29	1168-00	1400-00	4200000	760

1	2	3	4	5	6
	Прилади К-140				
2	КМ140-101,102,104-107	890-00	1068-00	3204000	582
3	КП140-101,102,104 105 107-110	950-00	1140-00	3420000	62_
4	КМ140-703	950-00	1140-00	3420000	621
5	КМ140-М-001,002,004-007	1100-00	1320-00	3960000	719
6	КМ140-М-201 ХЛ2	900-00	1080-00	3240000	621
7	КМ140-М-401 402,404,405,ОМ4	1500-00	1800-00	5400000	981
8	КМ140-М-501 ОМ4	1100-00	1320-00	3960000	719
9	КМ140-М-701,702 ХЛ2	990-00	1188-00	3564000	647
	КМ140-М-704 ОМ4	950-00	1140-00	3420000	621
1	КП140-М-001,002,004,005, 007-011	1200-00	1440-00	4320000	785
2	КП140-М-201 203 206 ХЛ2	1050-00	1260-00	3780000	686
3	КП140-М-401,402,404,405, 407-414 ОМ4	1600-00	1920-00	5760000	1046
4	КЛ140-М-001-007	1200-00	1440-00	4320000	785
5	КД140-М-001-004 ОМ4	1100-00	1320-00	3960000	719
6	КД140-М-201,202 ХЛ2	1100-00	1320-00	3960000	719
7	КД140-М-405,406-412 ОМ4	1530-00	1836-00	5508000	1000
	Лічильники				
8	СПТ-90	3230-00	3876-00	11628000	2112
	Інші прилади				
9	Датчики АГАТ-ДИ -01 на точ				
	1 0 /	530-00	636-00	1908000	346
	0 5 /	610-00	732-00	2196000	399
	0 25	720-00	864-00	2592000	471
	Блок сполучення БСП	450-00	540-00	1620000	294
1	Блок живлення АГАТів				
	БЖД-2х\36	260-00	312-00	936000	170
	БЖД-4х\36	290-00	348-00	1044000	190
	БКД-0,1-2х\24	430-00	516-00	1548000	281
2	Модуль перехідний 7-16 0,5 50	45-00	54-00	162000	29
3	Блоки-реле БРЗП				
	вар 00,04	1020-00	1224-00	3672000	667
	вар 01 05	850-00	1020-00	3060000	556
	вар 02 06	670-00	804-00	2412000	438
	вар 03 07	460-00	552-00	1656000	301
	вар 08	1060-00	1272-00	3816000	693
	вар 09	770-00	924-00	2520000	458
	вар 1[illegible]	500-00	600-00	1800000	327
	Подсилювач 1МА	110-00	132-00	396000	72
	2МА	110-00	132-00	396000	72
	УЗМА	120-00	144-00	432000	78
	Лічильник СІ-206	25-00	30-00	90000	16
4	Блок БУ-9	60-00	72-00	216000	39
5	Блок ІП	50-00	60-00	180000	33
6	Блок ІПС	35-00	42-00	126000	23
7	Двигун ДШк	43-00	52-00	156000	28
	Двигун Д219	125-00	150-00	450000	80
1	Вентилятор ВПН	25-00	30-00	90000	17
2	Вентилятор для АЕС				
	ВПН-1 без датч	42-00	56-00	169000	31

МКЭ ЭНЕРГОСБЕРЕЖЕНИЕ

Международный консорциум

Украина 310022 Харьков, а/я 4515 Тел (0572) 44-00-10, факс (0572) 44-01-43
E-mail barsky@uepa kharkov ua

105-105/ _____

от "____"_____ 1997г

_____
_____
_____

[О внедрении энергосберегающего]
оборудования

Наш Консорциум предлагает поставку энергосберегающих электроприводов серии РЭН (регулируемый электропривод), соответствующих уровню ведущих мировых фирм, но - по существенно более низким ценам (см сравнительную табл) Универсальность предлагаемых электроприводов позволяет использовать их в любой сфере производственной деятельности

При их использовании для питания электродвигателей насосов, вентиляторов, дымососов обеспечивается экономия до 70% потребляемой электроэнергии

Одновременно приводы РЭН обеспечивают плавный пуск с заданным темпом, нечувствительность двигателя к колебаниям величины напряжения и несимметрии питающей сети, идеальную токоограничивающую защиту от токов к з и перегрузок, что на 10-15 лет увеличивает срок службы оборудования и его надежность

При использовании РЭН'ов в насосных экономия по воде и затрат энергии на ее перекачку позволяет сократить срок окупаемости до 0,5 года

При этом сами приводы РЭН не нуждаются практически в уходе

Мы готовы к сотрудничеству с Вами в вопросах

- обследования существующего оборудования и разработки ТЭО его модернизации (организация несет только командировочные расходы),
- разработки программ внедрения энергосберегающего электро-оборудования,
- решения всего комплекса задач, связанных с внедрением энергосберегающего электрооборудования проектирования, изготовления, поставки, монтажа, наладки, обучения персонала, гарантийного и послегарантийного обслуживания

Мы производим так же устройства плавного пуска которые одновременно могут существенно снизить потери в электродвигателях и их нагрев в тех случаях когда отсутствует потребность в регулировании частоты вращения

Прилагаю комплекты информационных материалов

Заранее благодарны за ответ

Директор Волокита Л И

МКЭ ЭНЕРГОСБЕРЕЖЕНИЕ

Международный консорциум

Украина 310022 Харьков а/я 4515 Тел (0572) 44-00-10, факс (0572) 44-01-43

E-mail barsky@uepa kharkov ua

01 18 11 97 г

-- г-ну Быков, Ю К

факс 27-76 96

Уважаемый Юрий Константинович!

На Ваш запрос сообщаем цены

РЭН 11 - 11 кВт - 2200 у е ед

РЭН 15 - 15 кВт - 2800 у е ед

РЭН 22 - 22 кВт - 3800 у е ед

В цену входит обследование места установки, шеф монтаж, наладка и транспортировка Цена дана для исполнения IP21 Гарантийное обслуживание - 1 год Работа электропривода с сигналом обратной связи 4-20 мА в замкнутом контуре регулирования обеспечивается

Директор /Л Н Волокита/

Корпорация Триол
Центр. офис РФ, г Санкт-Петербург,
ул. Благодатная, 2
Тел/факс: (812) 2969338, 2969175,
2964880

Представительство в Украине
ООО "Фундамент"
Украина, 310037 г Харьков,
ул Сумская, 2
Тел/факс (0572) 124653, 127207

Triol

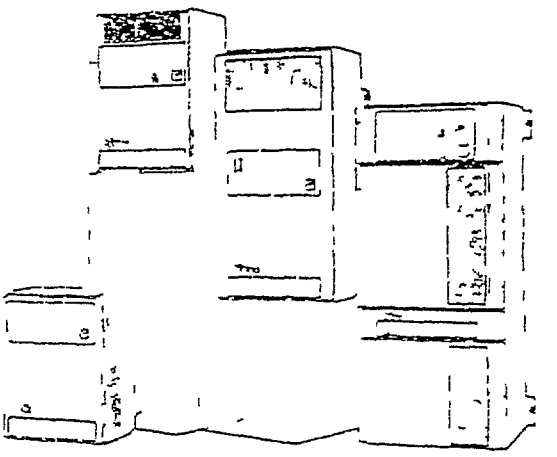

(№ 3131 001-39460462 96 РСФ от 27 12 96 г)

действует с 1 янв. 1972

Преобразователи частоты вращения АТ 01 асинхронных электродвигателей разработки и производства Корпорации Триол*

* Стоимость АТ 01 рассчитывается по текущему курсу на момент оплаты и включает в себя НДС В таблице представлены цены в USD

Мощность двигателя кВт	15	22	37	55	75	90	110	132	160	200
до 11 шт разных моделей или до $80 000 за 6 месяцев	2330	3290	4290	6650	8090	10190	12075	12705	15990	18990
от 11 до 24 шт разных моделей или от $80 000 до $140 000 за 6 месяцев	2190	2960	3950	5990	7490	11295	11295	11655	14740	17090
более 24 шт разных моделей от $140 000 за 6 месяцев	1990	2690	3590	5590	6830	8540	10250	10520	13090	15800

* Преобразователи могут иметь исполнения IP-21 или IP-54 (дополнительная согласованная доплата необходима)

** Сроки поставки согласовываются договором в пределах 1-12 недель с момента оплаты в зависимости от размеров и характера поставки

Сервисное и гарантийное обслуживание.

Доставка и наладка преобразователей осуществляется на всей территории Украины. Стоимость этих услуг зависит от размера заказа и местонахождения Заказчика.

Поставка оборудования сопровождается годичным гарантийным обслуживанием, также сервисным обслуживанием в дальнейшем, производимым сервисным центром Корпорации в Украине (г. Харьков).

Поставка оборудования "под ключ" сопровождается как поставкой дополнительного оборудования (в т.ч. датчиками технологического параметра, шкафами управления, кабелями, разъемами), так и необходимым обучением персонала и передачей необходимой литературы.

Дополнительные возможности

При контракте на сумму более $40 000 оплата может быть произведена артерной продукцией по договорной цене. В этом случае срок поставки считается с момента получения бартерной продукции.

Специалисты Корпорации осуществляют рассчеты экономической целесообразности применения оборудования, подбор оптимальных технических решений и реализовывают различные задачи по автоматизации и управления разнообразными технологическими процессами по заданию заказчиков в различных отраслях промышленности и городского хозяйства.

В случае необходимости поставок приводов со специальными характеристиками (вне рамок ТУ) мы проводим необходимые доработки и исследования по заданию заказчиков.

тел 227-0200 Господину Филиппову, для Быкова Ю.А.

ABB Frequency Converters

Транзисторные преобразователи для регулирования скорости вращения асинхронных электродвигателей насосов и вентиляторов

Трехфазное напряжение 380В, 400В, 415В

Тип преобразователя	IP 22		IP 54		Высота мм	Ширина мм	Глубина мм	Вес кг	Цена, USD IP 22 без EMC фильтра	Цена, USD IP 22 с EMC фильтром	Цена USD IP 54 с EMC фильтром
	Номин ток А	Мощн двигат кВт	Номин ток А	Мощн двигат кВт							
ACГ601-0016-3	32	15	-	-	526	304	310	25	2 291	2 458	-
ACГ601-0020-3	41	18,5	32	15					2 887	3 105	3 493
ACГ601-0025-3	17	22	41	18,5					3 301	3 545	3 680
ACГ601-0030-3	62	30	47	22	715	301	357	35	3 752	4 037	4 237
ACГ601-0040-3	76	37	62	30					4 151	1 787	4 987
ACГ601-0050-3	89	45	76	37					5 681	6 107	6 307
ACГ601-0060-3	112	55	89	45					6 351	6 831	7 161
ACГ601-0070-3	121	75(60)	112	55	715	301	429	50	7 245	8 047	8 377
ACГ601-0100-3	178	90	-	-					9 666	10 350	-
ACГ601-0120-3	200	110(100)	-	-	860	480	428	88	11 192	11 989	-
ACГ607-0100-3	178	90	147	75					11 463	13 973	14 603
ACГ607-0120-3	200	110(100)	178	90	860	480	428	88	13 119	16 819	17 509
ACГ607-0140-3	260	132	200	110					16 675	21 476	22 396
ACГ601-0170-3	316	160	260	132					19 093	24 581	25 751
ACГ607-0210-3	395	200	316	160	2065	1030	644	370	21 258	27 169	28 509
ACГ601-0260-3	480	250	395	200					23 771	30 274	31 784
ACГ607-0320-3	520	315(270)	480	250	2065	1030	644	400	27 859	35 794	37 504

EMC фильтр - устройство уменьшающее влияние бросков тока от ACS 600 и питающей сети
Степень защиты - IP 22 и IP 54
В цену привода не входит НДС, таможенный сбор, страховка и транспортные расходы

АВВ Украина тел (044) 296-46-43
НПФ "Элмаш" тел (044) 441-26-66

17/12 97 16 24 FAX 11111111 001

APPENDIX F ABBREVIATIONS AND MEASUREMENT UNITS

ABBREVIATIONS

CCD - condensate contamination determination
ECO - energy conservation opportunity
ESCO - energy saving company
hrn - hrivnia
Fig - figure
NPP - nuclear power plant
tel - telephone
VAT - value-added tax
US - United States
USAID - United States Agency of International Development

MEASUREMENT UNITS

barg - atmosphere gauge
BTU - British thermal unit
^{0}C - degrees Celcium
cm^2 - centimeter squares
^{0}F - degrees Faranheit
g - gram
Gcal - gigacalory
GJ - gigajoule
h - hour
kcal - kilocalory
kg - kilogram
kgf - kilogram-force
kV - kilovolt
kV-A - kilovolt-amper
kW - kilowatt
kW h - kilowatt hour
Lm - lumen
m - meter
m^2 - meter squared
m^3 - meter cubed
min - minute
MJ - megajoule
mm H2O - millimeters of the water column
MW - megawatt
t - tonne
t/h - tonnes per hour
W - watt

Currency rates of exchange

1 hrivnia - local currency unit
1hrivnia = US$0 54 as of December 1997

Conversion factors

Heat

1 cal = 4 187 J
1 Ccal = 4 187 kJ = 3 968 BTU
1 Gcal = 4 187 x 10^3 = 4 187 GJ
1 BTU = 1055 J = 1 055 kJ = 1 055 x 10^3 MJ

Power

1 W = 3 6 x 10^3 J = 3 6 kJ
1 kW = 3 6 x 10^3 kJ = 3 6 MJ = 860 Ccal
1 MW = 3 6 x 10^3 MJ = 860 Ccal
1 Ccal = 1 163 x 10^3
1 Gcal = 1163 kW = 1 163 MW
1 kW = 0 102 HP (boiler)
1 kW = 1 34 HP (mech)

Pressure

1 kg/cm = 1 atm
1 atm = 101 325 kPa = 0 1 Mpa
1 bar = 10^5 Pa = 100kPa = 0 1 Mpa

Length

1 mm =0 03937 in = 0 00328 ft
1 cm = 0 3937 in = 0 0328 ft
1 m = 3 937 in = 3 281 ft

Weight

1 gram = 2 2046 x 10^{-3} lb
1 kg = 2,2046 lb
1 t = 1000kg = 2 2046 x 10^3 ft

Area

1 cm^2 = 0 155 square in = 1 076 x 10^{-3} ft
1 m^2 = 1 55 x 10^3 square in= 10 76 square ft

Volume

1 m^3 = 35 31 cu ft = 1000 l
1l = 35 31 x 10^3 cu ft
1l = 0 264 US gal

Heat content

1 kJ/kg = 0 43 BTU/lb
1 kJ/m^3 = 26 84 x 10^3 BTU/cu ft
1 MJ/m^3 = 26 84 BTU/cu ft
1 Ccal/m^3 = 4,187 kJ/m^3 = 0 112 BTU/cu ft

Temperature

^{0}C = 0 56 (^{0}F-32)