PN-ACD-549
99366

Order #30
Industrial Energy Efficiency - Ukraine
November, 1997

# REPORT
# ON ENERGY AUDIT
## AT Open Joint-Stock Association *LVIV BUS PLANT*
## Lviv City, UKRAINE


Prepared by Mr Charles Fafard
Mr Valery Deineko
Mr Alexandr Silakin


Prepared for United States Agency for International Development
Washington, D C 20523-1415


Burns and Roe Enterprises, Inc
1400 K Street, NW, Suite 1050, Washington, D C 20005
Telephone 202 408-6831 Facsimile 202-408 6835

# Table of Contents


1 EXECUTIVE SUMMARY 3

1 1 INTRODUCTION 3
1 2 PRINCIPAL FINDINGS 3
1 3 RECOMMENDATIONS 4
1 4 OPERATION AND MAINTENANCE 7

2 GENERAL BACKGROUND 9

2 1 HISTORY OF PLANT 9
2 2 TYPES OF PRODUCTS 10
2 3 NUMBER OF EMPLOYEES 10
2 4 SIGNIFICANCE OF THE SECTOR TO ECONOMY 10

3 CURRENT STATUS OF PRODUCTION 11

3 1 TOTAL ESTIMATED PRODUCTION CAPACITY OF THE PLANT 11
3 2 ACTUAL PRODUCTION CAPACITY OF THE PLANT 11
3 3 PROSPECTS FOR PRODUCTION DEVELOPMENT 11
3 5 MAIN ENERGY CONSUMING EQUIPMENT 11
*3 5 1 Compressed air 11*
*3 5 2 Steam 13*
*3 5 3 Thermal energy 15*
*3 5 4 Natural gas 16*
*3 5 5 Electric power 18*

4 0 FINANCIAL STATUS OF PLANT 20

4 1 CURRENCY VS BARTER 20
4 2 VIABILITY OF PLANT 20

5 ANNUAL ENERGY CONSUMPTION AND ITS COST 21

5 1 ANNUAL CONSUMPTION OF HEAT ENERGY IN 1996 AND 1997 21
5 2 ANNUAL CONSUMPTION OF ELECTRIC POWER AND NATURAL HAS IN 1996 AND 1997 22
5 3 CURRENT TARIFFS ON ELECTRIC POWER AND FUEL IN 1997 24
5 4 STRUCTURE OF THE TOTAL ENERGY CONSUMPTION AND ITS COST IN 1996 24
5 5 METERING CONSUMPTION OF ENERGY SOURCES 25

6 PREVIOUS IMPROVEMENTS OF ENERGY CONSERVATION 26

7 0 ENERGY AUDIT 28

7 1 SPECIFIC ENERGY CONSUMPTION IN 1997 28
7 2 MEASURES AIMED AT ENERGY CONSERVATION 28

8 EFFECTS OF IMPLEMENTING THE RECOOMMENDATIONS ON ENVIRONMENT 36

APPENDIX A ENERGY CONSERVATION OPPORTUNITIES 37

APPENDIX B SPECIFICATIONS FOR RECOMMENDED EQUIPMENT 65

APPENDIX C DATA FROM MANUFACTURERS

APPENDIX D MEASURED AND COLLECTED DATA

APPENDIX E PHOTOGRAPHS OF THE PLANT

APPENDIX F ABBREVIATIONS AND MEASUREMENT UNITS

# 1 EXECUTIVE SUMMARY

## 1 1 Introduction

This energy audit was performed in accordance with the program financed by the United States Agency for International Development (USAID) according to Delivery Order #30 The given project provides making energy audits at 24 industrial Ukrainian facilities The aim of the project id setting-up independent Ukrainian energy servicing companies (ESCOs) To implement the said task the company *Burns and Roe Enterprises, Inc* (General Contractor) invited Ukrainian engineers These specialists were taught to the methods of making energy audits in the USA and to the principles of organizing operation of ESCOs Making energy audits at industrial facilities contributed to practical preparation of ESCOs

Energy audit making included visiting for a week an enterprise by a group of engineers that usually consisted of two or three people So, one week was not enough for making a complete energy audit at the plant, as mainly large plants were chosen for making energy audits In many cases there occurred a necessity to focus the energy audit works on one processing line or on one plant department Hence, the given audit is based on what we really managed to do for a week Though the audit already includes a whole set of recommendations for the plant management, it is expedient to make a complete integral energy audit of the plant It is desirable that the plant management should invite specialists prepared within the framework of this project to continue the work, which must bring to improvement of the whole situation with energy consumption at the plant and to making the full list of the measures to be used to improve the energy consumption at the plant

## 1 2 Principal findings

During November 24 to 28, 1997 a group of energy auditors performed an energy audit at the Open Joint-Stock company "*Lviv Bus Plant*" (OJSC "LAZ")

The basic products of OJSC "LAZ" are buses for different purposes and of different modifications

The plant has both main, and ancillary production units providing a completed production cycle, but it has no its own sources of thermal energy supply

OJSC "LAZ" is quite a large user of thermal energy, electric power and water In 1996 purchasing of energy resources cost above one million USA dollars

Being a large user of thermal energy that is bought from a Thermal Power Plant, the plant has a set of problems with respect of the efficiency of utilization of thermal energy

- low efficiency of steam consuming equipment, which is accounted for by absence of steam traps,
- significant losses with the secondary boiling steam
- low percentage of the condensate return

Insufficient efficiency of electric power energy utilization can mainly be accounted for by the operation modes of the compressor stations

Efficiency of the plant is also worsened by inadequacy of the installed capacities to the actual production volume and because of a one shift operation mode of the plant

While making the audit, there were found a lot of attractive opportunities for improving the energy efficiency of the enterprise, both by improving the energy efficiency of the production, and at the cost of short-term measures (up to 1 year) that do not require large investments, and by implementing the middle-term measures (up to 2 years) that require capital investments

Implementation of the proposed measures without taking into account interaction of the projects will make it possible receiving the following savings

- saving of electric power - 4,978,000 kW h (the cost is USD 267,319),
- saving of thermal energy - 6,431 GCal (the cost is USD 280,347),
- saving of natural gas - 37,750,000 $m^3$ (the cost id USD 3,133)

The costs on energy resources is USD 550,779 per year, providing that the costs of commissioning and implementation of the proposed measures are USD 461,752

At the same time the amount of emissions of harmful substances into the atmosphere (CO, $SO_2$, $NO_x$ and ash) decreases by 86 75 tonnes per year

After choosing by the plant priorities concerning implementation of energy conservation opportunities (ECOs), when mailing financial estimations of the measures to be implemented, interaction of the projects should be taken into account

The plant has got reserves for further energy saving, their implementation will require a more detailed energy audit

## 1 3 Recommendations

The below table shows a list of energy conservation opportunities (ECOs) identified for the enterprise The table shows the estimated savings as well as the cost savings for the measures with the implementation term of up to on year These measures are recommended for their implementation as soon as possible The plant management is recommended to consider the issue of implementation of the other measures when financial opportunities become available

To encourage the facility to implement energy efficiency and energy conservation, USAID is contributing energy auditing equipment to the plant This equipment consists of standard energy auditing instrumentation and meters that will enable them to implement an energy saving activity This item is shown in the table as ECO #1 This recommendation is for the plant to implement an energy management section that would be responsible for recommending changes or improvements in any system that would result in energy savings

Typically, an energy management team or section would consist of the minimum of three persons, an engineering supervisor, an electric engineer and a thermal engineer The supervisor would be a part of the upper plant management, and should report directly to the plant management This is so that energy usage and energy are elevated in importance, and that the plant manager is aware of potential changes to save energy

The main directions concerning the energy conservation at the plant that are recommended after gaining the energy audit data as follows

- automatic separation of the "clean" and " dirty" condensate (ECO #2),
- monitoring the quality of condensate of the steam using equipment (ECOs #3),
- automation of the condensate quality control (ECO #4),
- installation of steam trapping assemblies of calorifers (ECO #5),
- automation of metering the steam consumption (ECO #6),
- monitoring of the temperature operation mode of the heat using equipment (ECO #7),
- repairing compressed air leaks (ECO #8),
- monitoring of the capacity of motors (ECO #9),
- introduction of an automatic system for controlling the turbine compressor (ECO #10),
- automation of metering electric power consumption (ECO #11),
- replacement of lamps in the external lighting system (ECO #12),
- automation of consumption of compressed air (ECO #13),
- installation of steam traps (ECO #14),
- introduction of infra-red gas-fire heating systems (ECO #15)

## List of Energy Conservation Opportunities (ECOs)

| ECOs | Description | Saving | | | | | Cos of the energy saving, USD | Cproject costs USD | Payback period, year |
|---|---|---|---|---|---|---|---|---|---|
| | | Electric power, 1,000 kW h | Natural gas, 1,000 m³ | Steam, Gcal | Hot water, 1,000 m³ | Cold water, 1,000 m³ | | | |
| 1 | Introduction of an energy management program | 399 | 37 75 | 640 | 540 | | 58,227 | 48,979 | 0 8 year |
| 2 | Automatic separation of clean" condensate from "dirty one | | | condensate 583 | | | 51,205 | 20,664 | 0 5 year |
| 3 | Monitoring of the quality of the condensate of the steam using equipment | | | condensate 159 | | | 6,790 | 1,950 | 0 3 year |
| 4 | Automation of controlling the condensate quality | | | condensate 97 | | | 8,529 | 4,608 | 0 5 year |
| 5 | Steam trap assemblies of calorifers | | | 108 | | | 2,989 | 2 484 | 0 8 year |
| 6 | Automation of metering the steam consumption | | | 1,535 | | | 44,745 | 40,040 | 0 9 year |
| 7 | Monitoring of the temperature regime for operation of the heat using equipment | | | 123 | | | 3,585 | 1,000 | 0 4 year |
| 8 | Repairing compresses air leaks | 235 | | | | | 17,873 | 6,000 | 0 3 year |
| 9 | Monitoring the capacity of motors | 153 | | | | | 8,189 | 6,500 | 0 8 year |
| 10 | Automatical system for controlling the turbine compressor | 3 072 | | | | | 164,966 | 49,820 | 0 3 year |
| 11 | Automation of metering and checking the electric power consumption | 763 | | | | | 40,946 | 40,186 | 1 year |
| 12 | Replacement of lamps in the external lighting system | 171 | | | | | 10,400 | 9,755 | 0 94 year |
| 13 | Automation of metering the consumption of compressed air | 185 | | | | | 17,873 | 26,116 | 1 5 years |
| 14 | Steam traps | | | 2,057 | | | 61,085 | 111,650 | 1 8 years |
| 15 | Infra-red gas-fire heating systems | | | 1,129 | | | 46,966 | 122,000 | 2 6 years |
| | **Total** | **4,978** | **37 75** | **6,431** | **540** | | **550,799** | **461,752** | |

## 1 4 Operation and Maintenance

It is typical for industrial plant management to mainly think in terms of production, and to want to increase output Therefore it is sometimes difficult to think of the importance of energy and energy costs to the operation of a plant

For Lviv Bus Plant, as with most industries in Ukraine, this is not the same Previously energy costs were subsidized and plentiful, and energy was not a major consideration in plant operations

With the rising energy costs over the past few years, energy costs have now become very significant For Lviv Bus Plant, energy costs are now about seven percent of the cost of producing the buses Depending on the type and size of bus, this means that energy costs are approximately US $2,500 to 3,000 (about 4,600 to 5,600 hrivnias) for the typical unit

While energy and energy costs are now well understood by the Lviv Bus Plant staff, there is the tendency to think mainly of having to implement large projects with the intent of saving large amounts of energy This is unfortunate since many small energy saving projects exist that have very good payback periods

A common mistake is ignoring more measures that have low savings For instance, the installation of steam traps might not seem as attractive as installing a large project such as a natural gas fired boiler system to produce steam But these small projects are very important, and when the total number of steam traps is considered, the total savings resulting from this item is very significant

Most industries in Ukraine have a person or persons who are referred to as energy engineers These people are typically responsible for ensuring that there is an adequate supply of energy to the plant, not to improve the energy efficiency of the plant But with the rise in energy prices and the uncertainty of availability of all fuels, an energy manager to conserve energy becomes important Each plant should seriously consider establishing an energy manager position at a minimum, and for large industries, possibly even an energy management section

These people should be regularly monitoring all operations, and especially reviewing monthly energy consumption This monthly data should be graphed and compared to previous months and years to determine any variations in consumption Where variations due occur, they should then determine the cause of the variation and whether remedial action is required For instance, if monthly consumption increases, the reasons why should be determined and if appropriate, steps taken to correct any problems

In addition, the energy management staff should also review each process, and look for energy saving opportunities They should see that all cost-effective energy improvements are implemented, beginning with items identified in this energy audit They should then also have responsibility to review all proposed changes to the facility to ensure that each process is as energy efficient as possible

A plant the size of LAZ should have several people working in an energy management group At a minimum, it would be good to have a thermal specialist (someone who is knowledgeable about steam, hot water, and natural gas systems) and an electrical specialist There should be a third person to manage all of the activities of this group, and to report directly to the top plant management

At many facilities the energy management section is assigned an energy goal, such as reducing the overall energy usage by five percent per year while the percentage goal can vary, this type of challenge gives industries benchmark by which the section can be evaluated And in industries in Ukraine, where energy efficiency is just at its infancy, the percentage goal could even be higher Some industries also have an incentive program, in which employees are encouraged to submit energy efficiency improvement ideas These ideas, if accepted and implemented, would result in a small reward being given to the employee

# 2 GENERAL BACKGROUND


| | |
|---|---|
| Chairman of the Board | Mr Vasyl Petrovych TRACH |
| Technical Director | Mr Vasyl Hryhorovych VASYLUSHYN |
| Chief Energy Engineer | Mr Mykola Semenovych HOLIANYK |

Tel (0322) 63-0558
Fax (0322) 63-6060
45, Stryiska Str , Lviv, 290618, Ukraine


## 2 1 History of plant

The enterprise was established in July 1945, the first buses were manufactured in 1956

Until 1991 the plant specialized in the production of medium-seating capacity buses with petrol engines

From 1991, in order to improve of the competitiveness of its products, the plant switched on a new line - production of a new set of up-to-date buses of all types and sizes, and primarily on production of big city general-purpose buses with Diesel engines During 1992 and 1993 a powerful design administrative team of 300 people was restored, which within n a short period of time developed a set of buses to be used in cities and for intercity travelling

The first industrially produced set of big city buses was manufactured in 1994 (83 buses)

As for the prospects, the plant is now developing a new generation of city buses of large and especially large seat capacity

In August 1994 the enterprise was re-established as the *LAZ* Open Joint-Stock Company (LVIV BUS PLANT) In 1995 its property was assessed and shares prepared for sale The State Property Fund of Ukraine approved in December 1996 the plan of the sale of the enterprise shares The Plant was included in a list of 200 enterprise in Ukraine that shall be privatized according to their own schedule

In January 1997 there were sold 26 per cent of the plant shares, by the end of the year there is planned to sell another 49 per cent of the shares Not less than 26 per cent of the Authorized Capital of the Open Joint-Stock Company will be offered to a strategic partner against its investment liabilities

Under market conditions restructuring of the enterprise is in progress From April 1, 1997 on the basis of the corresponding workshops there were established such subsidiary companies as "LAZ - Tools", "LAZ - Techno", "LAZ - ATP"

There are available at the plant all the production areas required for bus manufacture
- press-and-preparation area,
- body-production area,
- painting area,
- electric plating area,
- assembling area,
- mechanical processing area,

- thermal treatment and processing area,
- casting area (color metals)
- repair and maintenance services,
- other areas and production lines

The structure of the plant includes 4 main production workshops, 2 buildings, 4 auxiliary production workshops, management group and 34 functional departments

The enterprise is located on 70 ha, the industrial production area is 215,000 $m^2$, including 183,000 $m^2$ for the basic production lines and 32,000 $m^2$ for the auxiliary production lines

## 2 2 Types of products

At the present time LVIV BUS PLANT is the only enterprise in Ukraine manufacturing the following sorts of products

Table 2 1

Products and their percentage in the total sale

| Bus Model | | Percentage in the general production volume | Prices on Nov 25, 1997, US $ x $10^3$ (without VAT) |
|---|---|---|---|
| Local-route buses | A-141 | 63 | 44 |
| | LAZ-695N | | 32 5 |
| | LAZ-695D | | 34 |
| Intercity buses | LAZ-699R | 20 8 | 50 |
| | LAZ-42072 | | 78 |
| | LAZ-52074 | | 88 |
| City bus | LAZ-52523 | 15 2 | 68 5 |
| Trolley-bus | LAZ-52522 | 1 | 70 5 |

## 2 3 Number of employees

In average, as of October, 10 1997, the personnel of the plant was 4,820 persons, including

| | | |
|---|---|---|
| production workers | - | 3,243 persons |
| engineers | - | 1,381persons |
| non-production workers | - | 196 persons |

## 2 4 Significance of the sector to economy

For *LAZ* Open Joint-Stock Company is the only manufacturer of buses for different purposes in Ukraine and in CIS-countries, and its products are competitive, the current trend in the plant activities is prospective in the economy of Ukraine

## 3 CURRENT STATUS OF PRODUCTION

### 3 1 Total estimated production capacity of the plant

As of January 1, 1997 the annual production capacity of the plant was 7,790 buses and trolley-buses

### 3 2 Actual production capacity of the plant

The total production volume in 1996 was 1,031 buses, an average is 86 buses per month

The enterprise has a possibility to increase its production level up to the designed one providing there is a demand

### 3 3 Prospects for production development

Currently, at the cost of limiting the profit, conveyer lines, for welding bodies and for bus assembling, were modernized, there is in progress reconstruction of the painting complex, a line for tube phosphotation was introduced and a plasma sheet metal cutting area was implemented

The markets for the buses manufactured at the plant, in addition to Ukraine, are in Russia and Belarus There is work being carried out aimed at restoring the former markets in the states of the Central Asia (in particular - in Uzbekistan and Kazahstan) In 1996, 368 buses were sold outside Ukraine, and in particular to

Russian Federation - 281 bus,
Republic of Belarus - 52 buses,
Uzbekistan -28 buses,
Other states -7 buses

One should bear in mind that despite the activities from the side of foreign competitors (*Ikarus, Karosa, Mercedes LiAZ, Scania, Volvo)*, LAZ-buses, owing to their more attractive prices, opportunity of having servicing and an opportunity of getting spare parts (some of the latter are produced in Russia and Belarus) continue to be on demand in the above countries Sale of LAZ products in the CIS-countries as well as that in Ukraine completely depends on the economic status of these states, tax and legislation laws and on the mutual relations on the state level

### 3 4 Exports vs Domestic production

Based on 1996 data, 37 per cent of the plant products were sent beyond the borders of Ukraine

### 3 5 Main energy consuming equipment

#### *3 5 1 Compressed air*

Compressed air is mainly used at "*LAZ*" Joint-Stock Company to operate the assembling tools and the pressing equipment The compressed air is provided by

- three K-250-61-2 centrifugal compressors with the production capacity of 250 $m^3/h$ and of the power capacity of 1,500 and 1,600 kW that are installed in the power unit,

- five NDV-type compressors - 60 and 300 kW each (the production capacity of each is 50 $m^3/h$) that are installed in the compressor station

The operation pressure in the system is 5 5 barg

When the energy audit was being carried out one turbine compressor out of three was under repair (1 compressor as a redundant one, 1 compressor was under repair) The turbine compressor provides production of compressed air in the basic mode, the consumption peak is covered by exclusively connecting the piston compressors Due to the restrictions set by the manufacturing plant the turbine compressor is shutdown no more than 50 times a year

**24-hour schedule of the electric power load for a compressor on November 26, 1997**

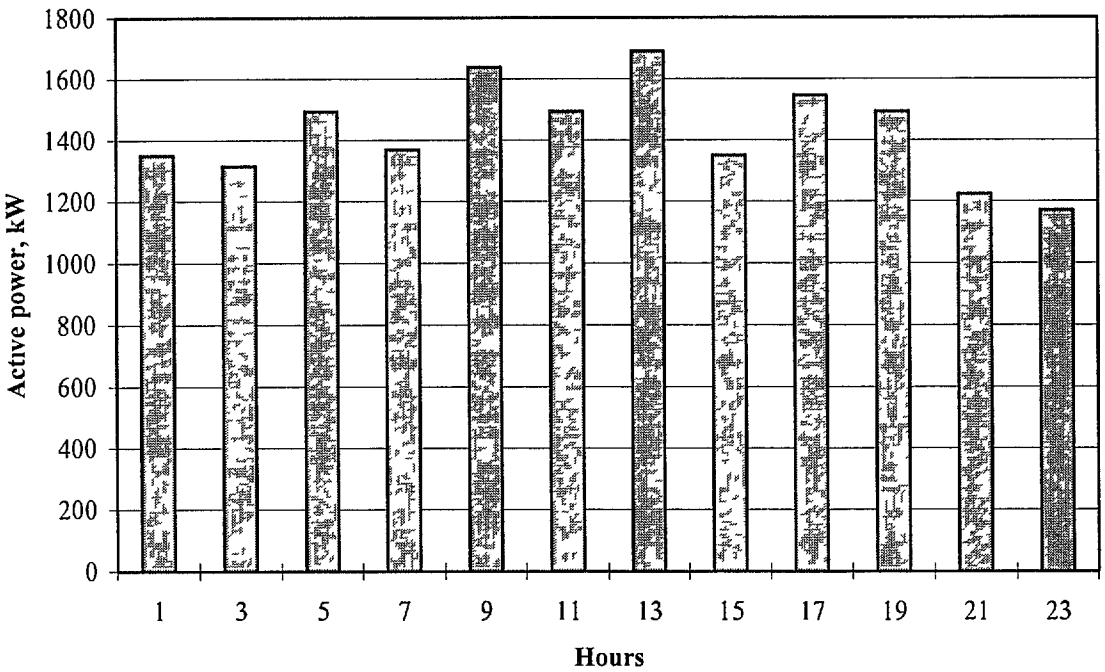


Fig 3 1

Analysis of the above diagram (see Fig 3 1) for a 24-hour schedule of the electric power consumption by a K-250-61-2 turbine compressor on November 26, 1997 demonstrates that the maximum load of the turbine compressor coincides with the beginning of the working day and it does change during the plant operation time On stopping operation at all basic productive areas the consumed power capacity decreases, and at night it is in average 1,350 kW (85 per cent of the nominal load)

The pipe line of the compressed air is designed for the pressure of 8 $kgf/cm^2$, it is put on a trestle (a canal on supports) The main compressed air ducts are cyclic within the workshops In accordance with balanced consumption of the compressed air designed for production of 3,000 buses per year, the yearly required amount of compressed air is 8,300,000 $m^3$

Table 3 1

**Distribution of the compressed air between the basic production areas at the plant**

| Consumers | October 1997 | |
|---|---|---|
| | $m^3/h$ x 1,000 | % |
| Body assembling workshop #2 | 2,040 | 25 |
| Pressing and preparation workshop | 1,290 | 16 |
| Bus assembling and painting workshop | 1,240 | 15 |
| Plant of Hydromechanical Transmissions | 1,291 | 16 |
| Other consumers | 2,470 | 28 |

**Distribution of compressed air between the basic production areas at the plant**

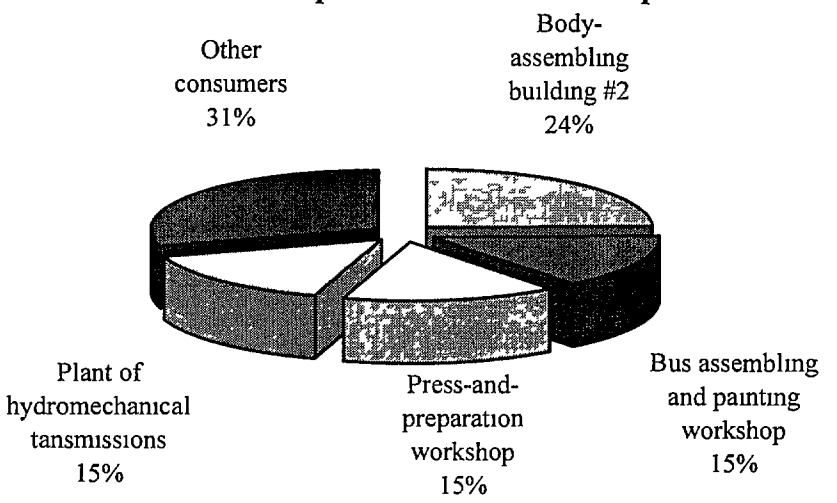


Fig 3 2

*3 5 2* *Steam*

The steam for the plant is provided by the Combined Heat Plant located at a distance of about 650 m from the heat station of the plant The processing production lines use overheated steam with the pressure of 5 5 barg and the temperature of 235°C

In 1996 the plant consumption of the heat energy in form of steam was 25,600 Gcal costing US $746,000 The basic consuming equipment is as follows

- electric plating tanks
- drying chambers
- hot water supply heaters
- washing solvents heaters

- air screens and air-and-heating aggregates
- other technical equipment

The steam consumption is about 36,000 t per year, the middle flow - 18 t/h, the maximum flow - 30 to 32 t/h

Table 3 2

**Steam distribution between the basic production areas at the plant**

| Consumers | January 1997 | | June 1997 | | Average value, % |
|---|---|---|---|---|---|
| | Gcal | % | Gcal | % | |
| Workshop for fixture production | 1,950 | 35 8 | 907 | 33 8 | 35 |
| Body assembling Building #2 | 1,950 | 35 8 | 933 | 34 8 | 35 |
| Mechanical processing workshop | 500 | 9 2 | 230 | 8 6 | 9 |
| Body assembling Building #1 Workshop for body assembling and welding | 320 | 5 9 | 154 | 5 7 | 6 |
| Wood processing workshop | 160 | 3 0 | 78 | 2 9 | 3 0 |
| Administration area | 290 | 5 3 | 141 | 5 3 | 5 0 |
| Other areas | 273 | 5 0 | 238 | 8 9 | 7 0 |
| TOTAL | 5,443 | 100 | 2,681 | 100 | 100 |

**Steam distribution between the basic production areas at the plant**

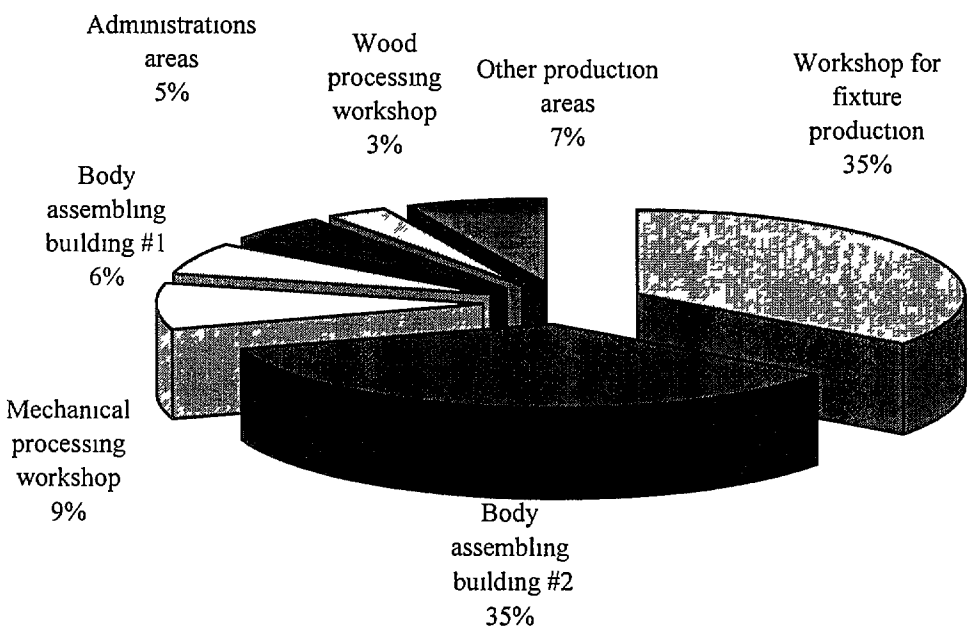


Fig 3 3

The heat energy in the stream supply system of the plant is used not effectively The main reasons for that are as follows

- absence of steam traps,
- absence of automatic systems for controlling temperature and pressure,
- significant losses from the flash steam,
- significant steam and condensate leaks through the leaks in fixtures and pipelines located in underground canals,
- low quality of the insulation or its absence on heaters, fixtures and piping ducts,
- significant losses of condensate due to its contamination by mixing the "clean" with the "dirty" condensate,
- necessity to start every day the steam ducts and the equipment from the "cold" state due to operation of the plant on a one-shift basis,
- exceeding the capacity of the installed equipment as compared to the actual load,
- absence of any instruments for metering the stream consumption and the steam parameters

There are good prospects for implementing energy conservation opportunities (ECOs)

### 3 5 3 Thermal energy

Thermal energy in form of hot water with the temperature of up to 130$^0$C is used for the radiant heating systems, air and heating aggregates and air screens

The heat energy consumption in 1996 was about 21,600 Gcal costing US $601,000 During 10 months in 1997 heat energy was used only in January The heat supply reduction was accounted for by financial relations of the plant with the CHP

Table 3 3

**Heat energy distribution between the basic production areas at the plant**

| Consumers | January 1997 | |
|---|---|---|
| | Gcal | % |
| Pressing and preparation workshop | 580 | 12 |
| Workshop for fixture production | 910 | 19 |
| Body assembling workshop #2 | 750 | 15 |
| Mechanical processing workshop | 430 | 9 |
| Body assembling Building #1 Workshop for body assembling and welding | 1,320 | 27 |
| Administration areas | 174 | 4 |
| Other areas | 750 | 14 |
| TOTAL | 4,914 | 100 |

**Heat energy distribution**
**between the basic production areas at the plant**

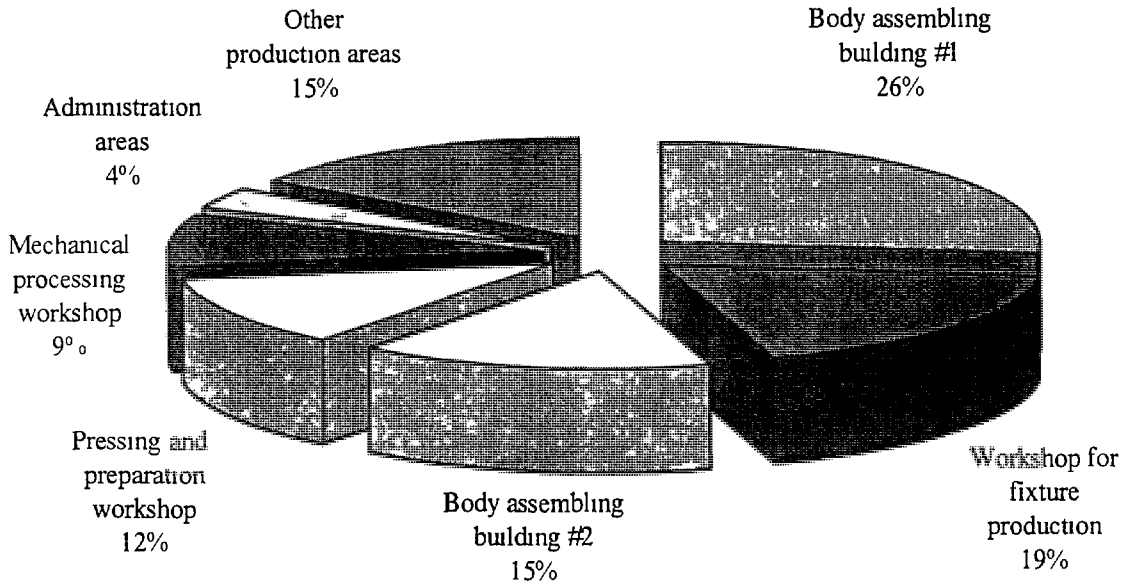


Fig 3 4

Studying the operation of the heat consuming equipment was not possible, as the existing heating system did not function Analysis of the operation data and the observation showed that the heat energy was used ineffectively The main reasons for that are as follows

– significant losses in the heat supply systems,
– no automatic control of the temperature and pressure during plant operation,
– low efficiency of the air heating,
– lack of instruments for metering consumption of the heat energy and its parameters

### *3 5 4 Natural gas*

Natural gas is used at the plant for the processing needs The basic gas consuming equipment is gas heating furnaces and drying plants

Gas consumption during 10 months in 1997 was 1,390,000 $m^3$ costing USD 115,370 The pressure of the used gas is up to 0 5 barg

Table 3 4

**Gas distribution between the basic production areas at the plant (see Fig 3 5)**

| Consumers | January 1997 | | June 1997 | | Average value, % |
|---|---|---|---|---|---|
| | m³ x 1,000 | % | m³ x 1,000 | % | |
| Pressing and preparation workshop | 73 2 | 30 | 37 2 | 27 6 | 29 |
| Workshop for fixture production | 51 9 | 21 3 | 26 4 | 19 9 | 20 |
| Mechanical processing workshop | 37 6 | 15 4 | 19 1 | 14 1 | 15 |
| Body assembling Building #2 | 23 4 | 9 6 | 11 9 | 8 8 | 9 |
| Body assmbling Building #1 and Workshop for body assembling and welding | 50 9 | 20 9 | 25 9 | 19 2 | 20 |
| Other production areas | 7 0 | 2 8 | 14 5 | 10 7 | 7 |
| TOTAL | 244 0 | 100 | 135 0 | 100 | 100 |

**Gas distribution between the basic production areas at the plant**

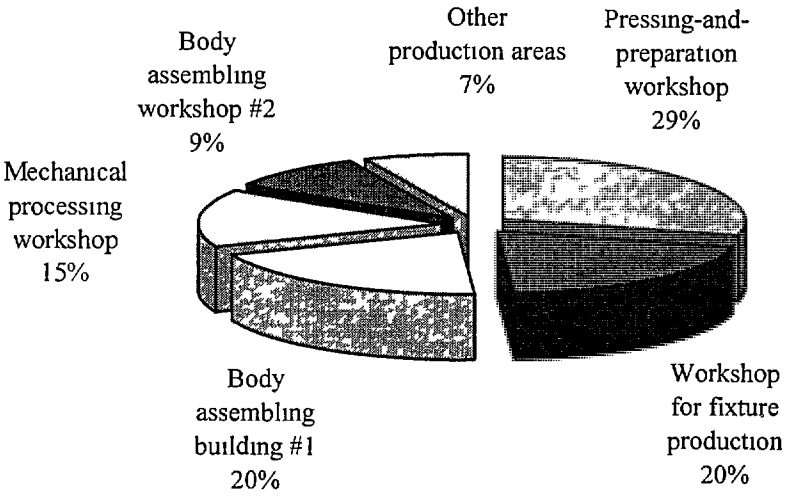


Fig 3 5

Using gas is a prospective strategic trend in the energy conservation at the plant, as gas is the cheapest and reliable sort of energy sources Modern processing equipment allows to use heat from gas combustion with high efficiency in drying aggregates, for infra-red heating devices, air heating systems and air screens

### 3 5 5 *Electric power*

The electric power supply system of "*LAZ*" open Joint-Stock Company includes a 110-kV deep lead-in switch-gear "*L12*" with two 110/6-kV voltage transformers, four 6-kV switching substations and 35 transformer units with the voltage of 6/0 4 kV The circuit is radial and sectioned

110-V switch-gear is on the balance of "*LVIVENERGO*" State Joint-Stock Energy Company Each out of their 8 leads-in has an installed commercial meter of the active and passive power (16 units in total)

The technical metering is provided only at two heat stations out of the four (at Switch Station #1 and at the switch station of the power unit) on the high voltage side (6 kV) Twenty out of 35 transformer stations has two transformers each, which makes provision of objective metering the electric power consumption in relation of each connection more problematic The readings of the existing meters are regularly recorded in a register-book, and based on these data the electric power consumption for the basic production areas is calculated according to the approaches used in the industry No continuous control of the electric power consumption is performed, as there is no corresponding metering system

The internal plant electric power supply system provides electric power for both the production and non-production areas, and some separate organizations that are not in included into the plant structure, these are "Institute", Plant for Hydromechanical Transmissions, "LAZ - Tools", "LAZ ATP", "LAZ Techno" and others

Instrumental metering the provided electric power consumption is possible only for one enterprise ("LAZ - Tools") As for the other enterprises connected to the plant network, the instrumental metering of the electric power consumption by each of them is problematic due to the radial structure of the internal power supply system of the plant

The electric power used in the production buildings is approximately distributed as follows (according to the data for October 1997)

Table 3 5

**Distribution of electric power consumption between the basic areas at the plant**

| Consumers | January 1997 | | October 1997 | | Average value, % |
|---|---|---|---|---|---|
| | kW h x 1,000 | % | kW h x 1,000 | % | |
| Energy workshop | 702,400 | 38 | 863,300 | 42 | 40 |
| Workshop for fixture production | 92,230 | 5 5 | 110,500 | 5 | 5 25 |
| Mechanical processing workshop | 92,230 | 5 5 | 110,500 | 5 | 5 25 |
| Body assembling workshop Workshop for body assembling and welding | 145,050 | 8 | 116,500 | 6 | 7 |
| Administration areas | 94,880 | 5 | 52474 | 3 | 4 |
| Other production areas | 707,686 | 38 | 815,082 | 39 | 38 5 |
| TOTAL | 1,848,476 | 100 | 2,068,356 | 100 | 100 |

**Distribution of electric power consumption between the basic consumers at the plant**

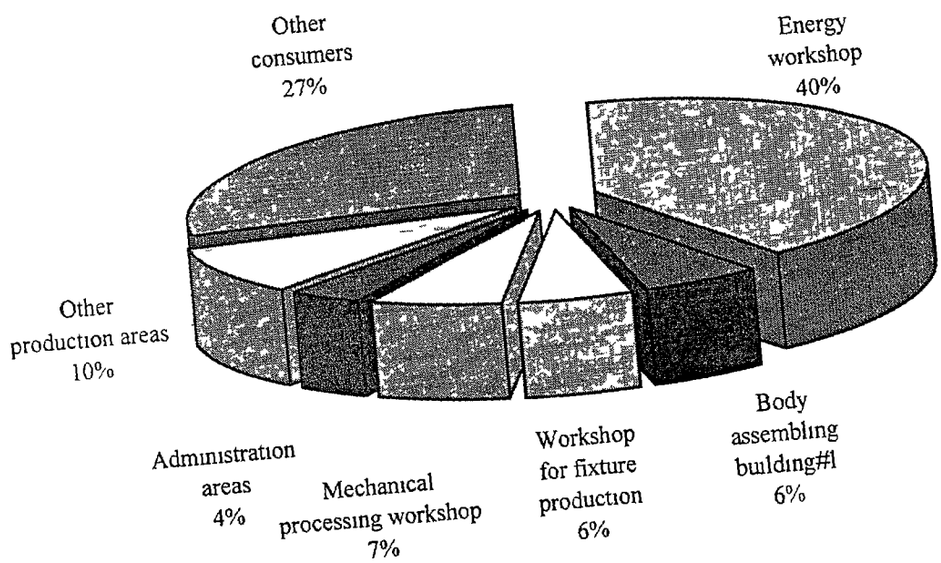


Fig 3 6

The main electric power consuming workshop is the energy workshop, where the electric power energy is chiefly used for production of compressed air

In 1996 the plant consumed 15,960,000 kW h of the electric power During 9 months in 1997 the consumption of the electric power for the processing needs was 8,570,000 kW-h at a cost of US $460 000

# 4 FINANCIAL STATUS OF PLANT

## 4 1 Currency vs Barter

Currency vs Barter operations is 53 7 per cent (according to the data for 10 months in 1997)

## 4 2 Viability of plant

The profitability of the enterprise in 1997 was 2 per cent According to the information received at the plant, due to the state on December 24, 1997, the Open Joint-Stock Company had no debts concerning payments for the heat and electric energy, indebtedness for gas was 286,000 hrn (US $154,460) that is to be paid by January 1, 1998

## 5 ANNUAL ENERGY CONSUMPTION AND ITS COST

Annual energy consumption is not stable, which is accounted for by both the production schedule, and by the relations with the energy suppliers, and primarily with the CHP, that makes the task of choosing the main indicators for the economic calculations and estimations of the energy conservation opportunities more complicated

### 5 1 Annual consumption of heat energy in 1996 and 1997

Table 5 1

| | Steam (Gcal) | | Hot water (Gcal) | |
|---|---|---|---|---|
| **Month** | **1996** | **10 months in 1997** | **1996** | **10 months in 1997** |
| January | 8,680 | 5,443 | 9,424 | 4,914 |
| February | 331 | — | — | — |
| March | 315 | — | — | — |
| April | 2,915 | 943 | — | — |
| May | 1,331 | 1,718 | — | — |
| June | 2,385 | 2,681 | — | — |
| July | — | 243 | — | — |
| August | 1,875 | — | — | — |
| September | 626 | — | — | — |
| October | — | 3,106 | — | — |
| November | 682 | — | 1,521 | — |
| December | 6,453 | — | 10,681 | — |
| TOTAL for the year | 25,593 | 14,134 | 21,626 | 4,914 |
| Cost, US $ | 746,036 | 412,006 | 601,203 | 136,609 |

NOTE steam - 1 Gcal = US $ 29 15, hot water - 1 Gcal = US $ 27 8

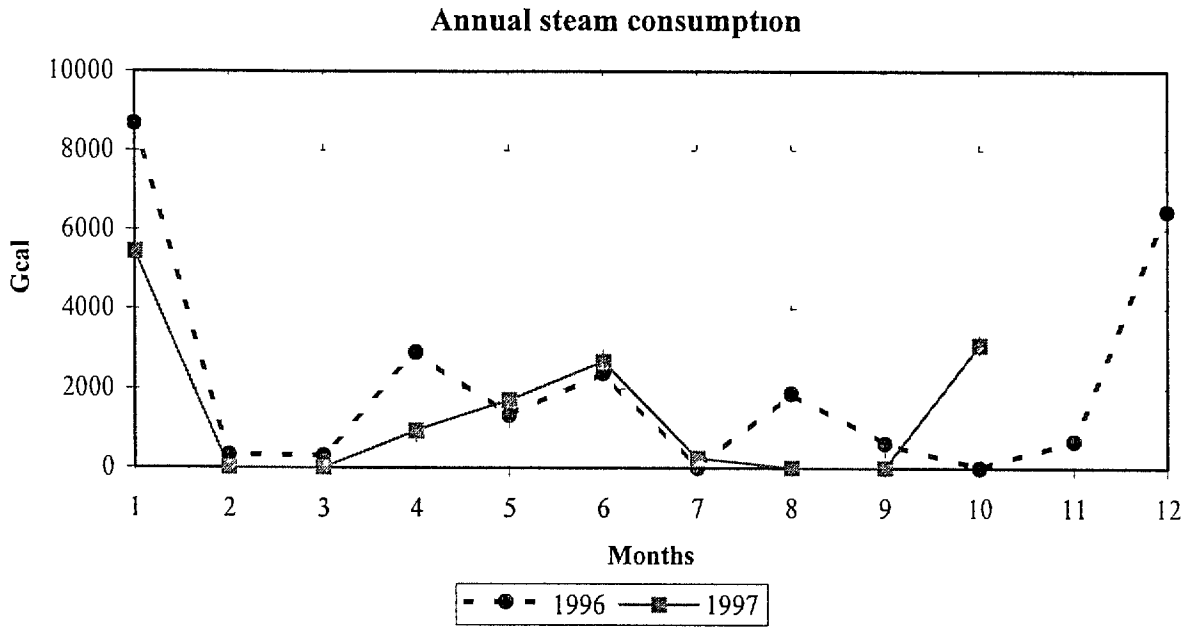


P

Fig 5 1

It is difficult to predict the steam consumption level, as it is connected with the loading of the main production lines and, in some cases, with failures in the steam supply In winter the steam consumption rises, which can be accounted for by switching on the heating aggregates The steam consumption in 1997 decreased as comparing it with that in 1996, as some drying chambers were switched from the steam heating to burning natural gas

## 5 2 Annual consumption of electric power and natural has in 1996 and 1997

Table 5 2

| | Gas, $m^3 \times 10^3$ | | Electric power, kW h x $10^3$ | |
|---|---|---|---|---|
| **Month** | **1996** | **10 months in 1997** | **1996** | **10 months in 1997** |
| January | 160 | 328 | 1,506 | 1,506 |
| February | 46 | 54 | 986 | 764 |
| March | — | 50 | 848 | 617 |
| April | 247 | 97 | 1,439 | 1,067 |
| May | 98 | 98 | 1,025 | 1,291 |
| June | 76 | 139 | 1,260 | 1,367 |
| July | 64 | 159 | 1,260 | 1,613 |
| August | 117 | 154 | 1,024 | 1,441 |
| September | 96 | 155 | 1,033 | 1,363 |
| October | 156 | 156 | 1,492 | 1,739 |
| November | 183 | — | 1,646 | — |
| December | 266 | — | 2,442 | — |
| TOTAL for the year | 1,509 | 1,390 | 15,961 | 12,768 |
| Cost, US $ | 125,247 | 115,370 | 857,106 | 685,564 |

NOTE 1 000 $m^3$ = US $83, 1,000 kW-h = US $53 7

**Annual natural gas consumption**

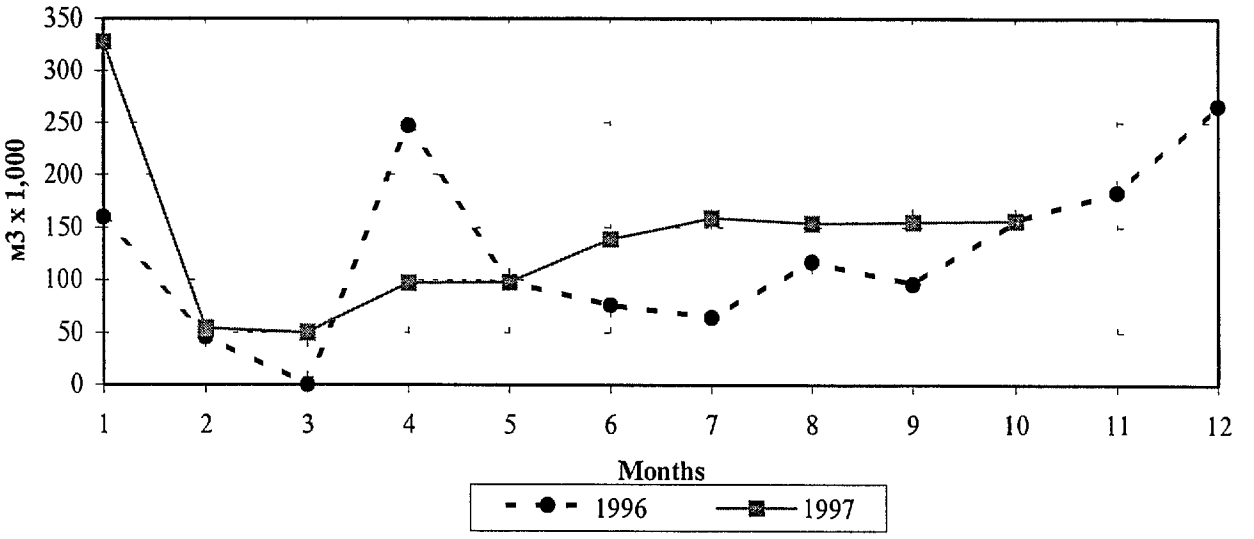


Fig 5 2

Consumption of natural gas depends on the season and on the loading of the main production lines In winter the consumption rises as a result of increasing the load of the boiler-house to heat the residential area The gas consumption at the plant increased in 1997 rises as some drying chambers were switched to burning gas

**Annual electric power consumption**

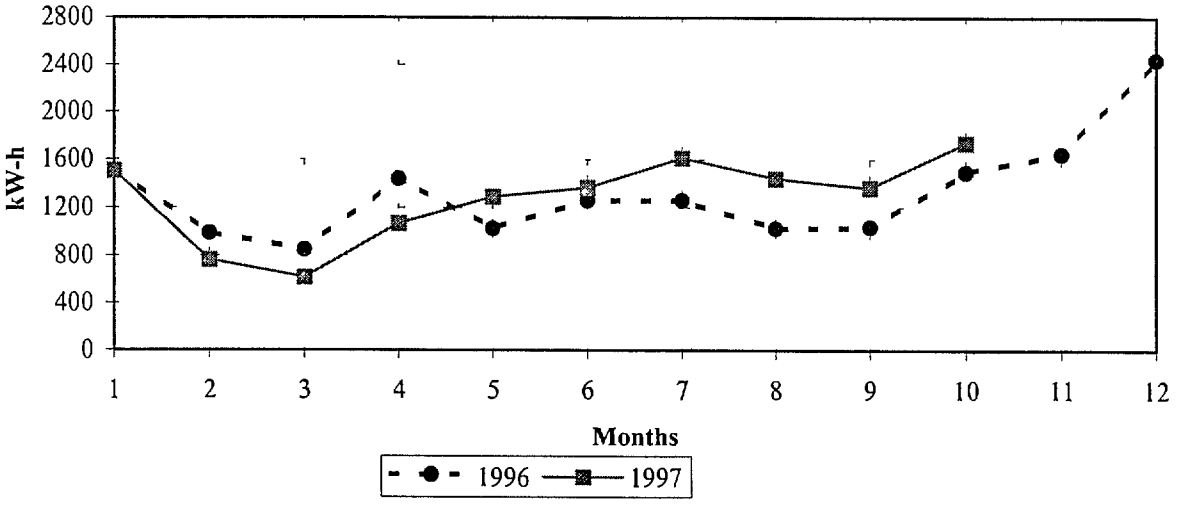


Fig 5 3

The chart for the annual electric power consumption shows the loading of the production facilities during a year Decreasing of the electric power consumption in February 1996 and in 1997 is accounted for by stopping the main production lines, the following gradual rising in the electric power consumption is accounted for by loading the production facilities In winter the electric power consumption rises, as the heating and ventilation equipment is switched

## 5 3 Current tariffs on electric power and fuel in 1997

- The cost of 1 Gcal of heat energy in form of steam with the pressure of 5 5 barg and the temperature of 235°C — 53 9 hrn (US $29 15)
- The cost of 1 Gcal of heat energy in form of hot water — 51 4 hrn (US$ 27 8)
- The cost of 1 kW-h of electric power in correspondence with the mutual settlements with the suppliers — 0 099 hrn (US $0 0537)
- The cost of 1,000 m³ of natural gas — 153 6 hrn (US $ 83)
- The cost of 1 tonne of the lost condensate providing that the percentage of its return is not less than 45 per cent penalty actions) — 2 5 hrn (US $ 1 35)
- The cost of 1 tonne of the lost condensate providing that the percentage of its return is not less than 45 per cent (penalty sanctions) — 10 hrn (US $ 5 4)

NOTE US 1 $ = 1 85 hrn

## 5 4 Structure of the total energy consumption and its cost in 1996

The structure of the energy consumption, its cost and the specific cost of 1Gcal of heat from energy sources are given in Table 5 3

Table 5 3

| Energy | Consumption | Gcal | % | Cost, US $ | % | Cost of 1 Gcal, US $ |
|---|---|---|---|---|---|---|
| Steam (P=5 5 barg, t=235°C) | 36,046 t | 25,593 | 35 | 746,036 | 32 | 29 2 |
| Heat energy (hot water) | 21,626 Gcal | 21,626 | 30 | 601,203 | 26 | 27 8 |
| Electric power | 15,961,000 kW-h | 13,726 | 19 | 857,106 | 37 | 62 4 |
| Natural gas | 1,509,000 m³ | 12,223 | 16 | 125,247 | 5 | 10 2 |
| TOTAL | — | 73,168 | 100 | 2,329,592 | 100 | — |

NOTE Data for calculations

1,000 m³ = 8 1 Gcal 1,000 m³ - US $83
1,000 kW h = 0 86 Gcal 1,000 kW-h - US $53 7
Steam - 1 Gcal = US $29 15
Hot water- 1 Gcal=US $ 27 8
Lower Heating Value $Q^{oper}_{lower}$ = 8,100 kcal/m³

Analysis of the energy consumption structure shows that a prospective trend in the energy conservation is increasing the share of the natural gas use

## 5 5 Metering consumption of energy sources

Steam, condensate, heat energy

There are no assemblies for metering the consumption and parameters of the heat agents and condensate at the plant The commercial metering system is on the CHP territory, from where the information about the heat consumption and parameters of the heat agent is every day communicated to the plant The received data are recorded in the Chief Engineer Energy Department in a special register-book At the end of the month the CHP presents the accounts for their payment by the plant

Electric power

Commercial metering of the electric power consumption is performed by means of active and reactive power meters installed on the high voltage side - two at each out of eight "L12" 110/6-kV switch-gear leads-in The readings of the meters are registered once a month by the plant staff together with employees of "LVIVOBLENERGO" energy supplying company

Natural gas

Commercial metering of the natural gas consumption is performed by means of a flow-rate meter on the basis of a narrowing device operated together with a self-registering device for controlling the pressure and temperature Processing the measured data is performed every day using planimeters

There is no computer-based metering of the gas consumption with the precision of ±1 % The balance of the gas consumption by the basic plant areas is made on the ground of approximate calculations

## 6 PREVIOUS IMPROVEMENTS OF ENERGY CONSERVATION

6 1 The plant does not have an energy management program, although some of the corresponding duties are performed by the Chief Energy Engineer Each production area is considered independent, and has the ability to develop their own projects Projects aimed at improving the energy facilities took place only in the middle of the eighties when the enterprise was reconstructed All the projects were evidently focused on changes in the production level, and energy saving objectives were not project's top priority

6 2 The plant specialists implemented a number of energy conservation measures during 1996 and 1997

- utilization of the condensate after the electric plating tanks (the temperature is 120 to 130 $^{0}$C) for heating water for the hot water supply system,
- utilization of the heat of the exhaust gases from the drying chamber to heat a washing solution,
- switching the drying chambers on gas combustion

6 3 At the Plant there has been developed Plan of Measures aimed at saving the fuel and energy resources in 1997

The main measures there are as follows

Electric power

- Decreasing the losses of compressed air (fixture repairing, improvement of the air supply system, disconnection of the networks of separate workshops and areas for the non-operation time)
  Saving — 25,000,000 kW h

- Power down the ventilation plants during idle periods
  Saving — 70,000 kW h

- Disconnection of power transformers for the idle periods and in case of the load going down
  Saving — 80,000 kW h

- Provision of the maximum load for the electric furnaces
  Saving — 40,000 kW h

- Introduction of automatic control of the turbine generator
  Saving — 110,000kW kW h

Heat energy

- Limiting steam consumption in winter and on idle days
  Saving — 2,400 Gcal

- Controlling the heating system and adjustment the heat networks
  Saving — 50 Gcal

- Introducing plants for heating the washing solution by means of gas combustion products instead of steam
  Saving — 240 Gcal

- Modernization of the drying chamber #21 to provide heating the washing solution by means of gas combustion products instead of steam
  Saving — 1,000 Gcal

Natural gas

- Arrangement of metering gas consumption by separate areas
  Saving — 4,000 $m^3$

- Introduction a commercial metering system with the precision of ±1 %
  Saving — 8, 000 $m^3$

- Modernization of the burners in Drying Chamber #21
  Saving — 9,000 $m^3$

The set measures are related to the available energy conservation opportunities Some of the measures require feasibility studies and estimation of the cost of their implementation to determine the payback period and to include them into the financial plan of the plant

6 4 At the plant there was developed a project and partially fulfilled the construction and installation works aimed at reconstruction of the stream-and-condensate pipe ducts and of the condensate pumping station (60 to 65 per cent of the estimated cost)

The project provided the following works

- putting the steam ducts and condensate lines on the trestle,

- installation of a new condensate pumping station with the condensate cooler,

- installation of water heaters, collecting tanks, pumps and pipe lines of the central hot water supply system,

- installation of a new stream and condensate ducts in separate workshops

The construction works were stopped due to poor financing The cost of the remaining works is 550,000 to 600,000 hrn (US $300,000 to 320,000 )

# 7 ENERGY AUDIT

## 7 1 Specific energy consumption in 1997

At the enterprise new standards of energy consumption per product unit were worked out in regard of separate sorts of equipment and technological processes However, due to lacking of metering and keeping records concerning energy agents consumption in relation of the basic production areas and technological processes, these standards are of rather design and theoretical character, and they cannot be used for assessment of the implemented ECOs

## 7 2 Measures aimed at energy conservation

Introduction of an energy management program **(ECO - 01)**

It is typical for every industrial plant management to mainly think in terms of production, and to want to increase output Therefore it is sometimes difficult to think of the importance of energy and energy costs to the operation of a plant Previously energy costs were subsidized and plentiful, and energy was not a major consideration in plant operations With the rising energy costs over the past few years, energy costs have now become very significant

At *LAZ* there is a group of specialists who are referred to as energy engineers These people are typically responsible for ensuring that there is an adequate supply of energy to the plant But with the rise in energy prices and the uncertainty of availability of all fuels, an energy manager activities aimed conservation of energy becomes important That is why the plant should seriously consider establishing an energy manager position at a minimum, and for large industries, possibly even an energy management section

It is proposed to provide the enterprise with the required measuring instruments in order to identify and quantitatively estimate the energy conservation opportunities, independently determine the energy conservation opportunities, decrease energy consumption and keep under control energy saving

| | |
|---|---|
| Expected saving | |
| - electric power | - 399,000 kW h, |
| - natural gas | - 37 750 $m^2$ |
| - steam | - 640 GCal |
| - hot water | - 540 GCal |
| Project costs | - USD 48,980 |
| Payback period | - 0 8 year |

Automatic separation of the "clean" and "dirty" condensate **(ECO - 02)**

The condensate losses at the enterprise are between 80 and 85 per cent, instead of 55 per cent as it was agreed with the CHP The main cause of an increased discharge of the condensate into the canalization is mixing the "clean" condensate with the "dirty" one at the pumping station followed then by contamination of the "clean" condensate at the CHP

It is proposed to install on the joint condensate ducts after the electric plating tanks and the

phosphotation tanks automatic systems for controlling the condensate quality and its discharging in case of its contamination to prevent its mixing with the "clean" condensate The proposed system automatically determines the level of the contamination, controls the valves with solenoid drives and discharges the condensate into the canalization, if the conductivity of the condensate happens to be higher than the accepted level, as well as it activates the alarm system Implementation of the given measure will enable to increase the condensate return by 15 to 20 per cent

| | | |
|---|---|---|
| Expected annual heat saving | - | 583 Gcal or US $ 16,213 |
| Expected annual condensate saving | - | 6,480 t or US $34,992 |
| Project cost | - | US $20,664 |
| Payback period | - | 5 months |

Monitoring the quality of the steam utilizing equipment **(ECO - 03)**

One of the main causes of the condensate getting contaminated is imperfect sealing of the steam heaters or "jackets" of the electric plating tanks or of some other equipment that is in contact with possible contaminators Information concerning the degree of the condensate purity as well as about impossibility to utilize that is received from the CHP

There is no performing urgent control of the quality of the condensate in regard of the steam utilizing equipment, which does not allow to organize in due time discharging the condensate into the canalization system for the period of eliminating the contamination cause This increases the heat and condensate losses at the enterprise

It is proposed to use at the plant a portable instrument - a condensate conductivity meter Availability of the instrument allows to arrange measurements of the quality condensate after each tank or an equipment unit, to carry out monitoring of the whole condensate system at the enterprise and provide fulfillment of repair works In case of activating the automatic system for discharging the "dirty" condensate, there is an opportunity to check quickly the source of the contamination and arrange for some time discharging the condensate from it into the canalization

| | | |
|---|---|---|
| Expected annual heat saving | - | 159 Gcal or US $4,411 |
| Expected annual condensate saving | - | 1,760 t or US $2,379 |
| Project cost | - | US $1,950 |
| Payback period | - | 4 months |

Automatical control of the condensate quality **(ECO - 04)**

The CHP being the steam provider for the plant sets high requirements to the quality of the steam to be returned The returned steam is supplied to the "clean" condensate tanks at the CHP If from the plant there is supplied "dirty" condensate, it becomes mixed with the "clean" condensate in the tanks, so the CHP imposes penalty sanctions for the whole contaminated condensate and the lost heat

There is no at the plant pump station instant detection of coming to the pump station of "dirty" condensate, which does not allow to stop in due time its pumping to the CHP and to undertake measures aimed at identification of the contamination source

It is proposed to install at the condensate pumping station an Spirax Sarco automatized condensate contamination detection system and a condensate sample cooler Implementation of the proposed measure will enable to save heat and condensate losses by 2 to 3 per cent (set)

| | | |
|---|---|---|
| Expected annual heat saving | - | 97 Gcal or US $2,697 |
| Expected annual condensate saving | - | 1,080 t or US $5,832 |
| Project cost | - | US $4,608 |
| Payback period | - | 6 months |

Installation of steam traps on the calorifers in the wood processing workshop
**(ECO - 05)**

In the wood processing workshop two calorifer plants are installed for heating the air supplied into the drying chambers In accordance with the energy balance of the plant the workshop consumes about 3 5 per cent of the steam consumed by the plant, or 1,500 t per year The calorifer plants have no steam traps, which significantly decreases the efficiency of their operation

In case of switching-off of the fan, the steam supply to the calorifer is not stopped, and the stream "rushes" to the condensate pumping station, at the station there is lost due to the second boiling of the condensate

It is proposed to install on each calorifer plant steam trapping assemblies with float steam traps Implementation of the proposed measure will improve the efficiency of the calorifers operation by 10 to 15 per cent

| | | |
|---|---|---|
| Expected annual heat saving | - | 108 Gcal or US $2,989 |
| Project cost | - | US $2,484 |
| Payback period | - | 10 months |

Automatical steam consumption metering **(ECO - 06)**

Commercial metering of the heat energy is fulfilled on the territory of the Heat Supply Station that is located at the distance of about 650 m from the plant At the plant there is no station for metering the consumption and measuring the parameters of the consumed steam and those in regard of the condensate The data concerning the heat sources consumption are received from the Heat Supply Station in regard of the 24-hour consumption, and they are entered into the register book There is not inside the plant any technical metering of the steam consumption in regard of separate consumers

As a matter of act, it is impossible to fulfill at the enterprise a steam-and-condensate balance, to estimate the efficiency of the heat energy utilization, to develop a standard basis as well as to implement a system for the energy consumption monitoring and target setting

It is proposed to install at the enterprise an automatic system for commercial metering the steam and condensate consumption There is planned to arrange a commercial stream and condensate metering system at the central heat station #51 and a technical stream metering system in 6 points on the main consuming area of the plant

From experience, the expected saving resulting from introduction of the own automatical metering system and of introduction of the energy consumption monitoring and target setting system will be not lower than 5 per cent

| | | |
|---|---|---|
| Expected annual heat saving | - | 1,535 Gcal or US $44,745 |
| Project cost | - | US $40,040 |
| Payback period | - | 11 months |

Monitoring the temperature schedule of the heat consuming equipment **(ECO - 07)**

The enterprise has a branched steam-and-condensate distribution system as well as a heat supply system, and at the same time there are practically no operation pressure gauges and thermometers for controlling the operation mode of the equipment It is impossible to analyze the efficiency of the heat consuming plants, nor to calculate the specific energy consumption, nor to identify in due time failures of the equipment

It is proposed to introduce into the plant practice a *Raynger ST6* portable infrared emission thermometer, which will enable to fulfill monitoring of the heat consuming equipment, to arrange a regular control (1 to 2 times a week) of its operation efficiency and to undertake in due time measures aimed at decreasing losses of the heat energy The expected improvement of the heat utilization efficiency is 0 3 to 0 5 per cent

| | | |
|---|---|---|
| Expected annual heat saving | - | 123 Gcal or US $3,585 |
| Project cost | - | US $1,000 |
| Payback period | - | 4 months |

Identification and repairing gas leaks **(ECO - 08)**

The enterprise has a branched network of the compressed air ducts While walking around the workshops there were found compressed air leaks at the non-operated equipment The leaks were

observed at the detachable joints of the pipe lines of the stamping and pressing equipment The stop valves for disconnecting the non-operated areas and workshops were disabled

There was no control of the compressed air supply The only instruments controlling the parameters of the compressed air on the spots of the compressed air consumption and production were pressure gauges During 9 months in 1997 the total production of the compressed air was 35,280,000 $m^3$ costing US $268,000

It is proposed to use at the enterprise a portable detector of gas and air mixture leaks, which will enable to fulfill a regular checking of the threaded and flanged joints, fixture and equipment seals as well as to eliminate the leaks This will permit, in the opinion of the experts, to decrease the compressed air losses at the enterprise not less than by 5 per cent

| | | |
|---|---|---|
| Expected annual saving of compressed air | - | 2,350,000 $m^3$ or US $17,873 |
| Project cost | - | US $6,000 |
| Payback period | - | 4 months |

Monitoring the electric motor drives capacity **(ECO - 09)**

The electric power consumption of main processing needs (due to the data for 9 month in 1997) is about 85 per cent of the electric power consumption of the whole plant, which is 11,420,000 kW h per year costing US $613,300

One of the largest electric power consuming devices are electric drives for the pumping and ventilating equipment

If any electric motors failed in the course of the enterprise operation, they were replaced with no taking into consideration the nominal required capacity As the measurements showed, only in one workshop with the painting and drying combined area, where the installed designed capacity of the electric motors for the ventilation systems is 2,589 kW, even for the equipment of the same type there are used motors of different installed capacity often exceeding the required value

Besides, taking into consideration the fact that 20 out of 35 transformer stations have two installed transformers each, provision of operative control of the power factor value is more complicated

It is proposed to introduce at the enterprise an operative control of the electric power actually consumed by the electric motors (primarily by the pumps and fans) by means of a set of portable measuring instruments (a clamp-on digital wattmeter) and by measuring the power factor (a power factor meter) Implementation of the proposed measure will enable to make monitoring of the real load of the electric motors, to analyze their efficiency and to organize their planned replacement with more effective ones Putting this measure into practice will enable to save annually not less than 1 per cent of the electric power consumed by the processing lines

| | | |
|---|---|---|
| Expected annual saving of electric power | - | 153,000 kW h or US $8,189 |
| Project cost | - | US $6,500 |
| Payback period | - | 10 months |

Automatic system for controlling the turbine compressor **(ECO - 10)**

Analysis of a 24-hour schedule of the electric power consumption by a *K-250-61-2* turbine generator made on November 26, 1997 showed that the peak load (of 1,600 kW) coincided with the beginning of the working day When the working shift was over, the load dropped down, and at night it was in average of 1,350 kW, which is 85 per cent of the nominal load

In accordance with the turbine compressor passport data, the manufacturer limits the number of its shut-downs to 50 times a year, as each starting the compressor decreases its resource not less than by 50 hours That is why the compressor is started two hours before the beginning of the shift on Monday and it is switched off when the shift is over on Friday Introduction into the compressor operation practice of a deep discharge mode would permit to decrease the electric power consumption to 350 kW (22 per cent of the nominal load) But such a mode is possible only providing an automatic control

It is proposed to install an automatic system controlling the turbine compressor The system is planned to be installed on the turbine compressor with the capacity of 1,600 kW

| | | |
|---|---|---|
| Expected annual saving of electric power | - | 3,072,000 kW h or US $178,812 |
| Project cost | - | US $49,820 |
| Payback period | - | 4 months |

Automation of the electric power consumption metering system **(ECO - 11)**

The cost of the electric power consumed by the plant in 1996 was US $857,000 At the present time it is impossible at the enterprise to assess urgently the electric power consumption and its efficiency,

nor to develop an adequate guiding basis and to introduce a monitoring and targeting system

It is proposed to install and to introduce into practice at the enterprise an automatic system for commercial and technical metering as well as monitoring the electric power consumption

There is planned to organize commercial metering of the electric power consumption at L-12 substation, while its technical metering is to be arranged at 35 transformer units From experience and on the ground of the expert estimations one can expect that the possible saving, resulting from implementation of a system for commercial and technical metering as well as for monitoring the electric power supply, will be not lower than 5 per cent

| | | |
|---|---|---|
| Expected annual saving of electric power | - | 763,000 kW h or US $40,946 |
| Project cost | - | US $40,186 |
| Payback period | - | 12 months |

Replacement of the external lighting **(ECO - 12)**

It is proposed to consider a project of replacing the DRL-250 high-pressure mercury lamps used for the external lighting of the plant territory with DNaT-100-3 high-pressure sodium lamps while using the currently existing fixture and the starting equipment of the corresponding capacity produced by *Interface* Company (Town of Vinnytsia, Ukraine) The light flux of a DRL-250 lamp is 10,000 lm, and its nominal operation time is 2,400 hours A DNaT-100-3 sodium high-pressure lamp of the national production (the town of Poltava) has a longer life time - it is 6,000 hours with the light flux of 9,000 lm

| | | |
|---|---|---|
| Expected annual saving of electric power | - | 171 000 kW h or US $10,400 |
| Project cost | - | US $9,755 |
| Payback period | - | 11 months |

Automation of the compressed air metering system **(ECO - 13)**

At the present time compressed air is very much used at the plant on the basic processing lines There is a branched system of trunk pipe ducts supplying the compressed air produced in the energy workshop and at the compressor station to the users The users are in 13 production buildings and on production areas remote from each other But there is no system for metering the flow rate of the compressed air at the places of its production, nor that on the places of its consumption

The quality of the produced compressed air id determined by calculation it by the approximate formula 1 kW h corresponds to 10 $m^3$ Technical metering of the consumption by separate production areas and workshops is performed approximately by calculation In accordance with the data provided at the plant, there was found that during 9 months in 1997 the total quantity of the compressed air produced at the plant was 35,280,000 $m^3$ costing US $268,000

Absence of a single system of registering the compressed air consumption makes it impossible to assess urgently and control the consumption of the compressed air

It is proposed to install at the plant and introduce into its practice an *ITEK* instrumentation system for energy consumption metering and controlling manufactured by "*ENERGY*" Research and Production Association (the city of Kyiv) There is planned to arrange technical metering of the

compressed air consumption at the outlet pipe line of the energy unit and the compressor station, at the inlet pipe lines of the body-and-assembling building, press-and-preparation workshop, bus assembling workshop. as well as commercial metering at the inlet pipe line of the Plant for Hydromechanic Transmissions Introduction of such a system, due to the experts' estimations, will enable to save not less than 5 per cent of the funds spent to produce compressed air

| | | |
|---|---|---|
| Expected annual saving of compressed air | - | 2,352,000 $m^3$ or US$17,873 |
| Project cost | - | US $26,116 |
| Payback period | - | 18 months |

Steam traps **(ECO - 14)**

The cost of the steam consumed annually by the enterprise is about US $895,000 In fact, more than 90 per cent of the steam consuming processing equipment is not provided with stream traps The "flashing" steam is supplied together with the condensate to the condensate pumping station where it gets lost in the atmosphere together with the secondary boiling stream Absence of steam traps is the main reason for a significant worsening the steam parameters, while the stream is being transported and distributed among the basic areas of the plant The required steam pressure (2 0 to 2 5 barg) is not provided to the final consumers

Often, in case of decreasing the consumption of the heated medium, or if the fans of the drying aggregates are dispowered, the steam consumption for the heat exchangers or calorifers do not go down The steam is directly "rushing" into the condensate collecting tanks An increased pressure in the condensate ducts causes problems with steam trapping at the steam consuming equipment of the final consumers, as there is no required pressure difference

The steam consuming equipment without steam traps provided operates inefficiently, especially in the mode of everyday "starting - switching-off", as the enterprise operates on a one-shift basis

It is proposed installing on the steam consuming equipment of steam trapping assemblies with steam traps corresponding to the type of the heat exchangers and to the mode of its operation

- on the steam and water heaters and calorifers - float steam traps
- on the coil heaters - balanced pressure thermostatic traps
- in the lower points of the steam ducts and steam manifold collectors - thermodynamic steam traps

Implementation of the proposed measure will improve the efficiency of the heat exchangers, prevent steam "rushing" and decrease the losses with the secondary boiling steam

| | | |
|---|---|---|
| Expected annual heat saving | - | 2,657 Gcal or US $59,961 |
| Expected annual condensate saving | - | 332 t or US $1,124 |
| Project cost | - | US $118,217 |
| Payback period | - | 23 months |

Infrared gas-fired heating systems **(ECO - 15)**

Heating the enterprise requires annually about 22,000 Gcal of heat costing US $555,000 35 to 40 per cent of that are used for heating the production rooms The basic type of the operated equipment is radiation heating systems and air heating systems The heat-transfer agent is water with the temperature of up to 130$^0$C

As it is knows from experience and from the world practice, the existing heating systems are not efficient, especially under conditions of availability of a significant amount of spare production area and the plant working on the basis of one-shift operation while the working week includes five days There is practically absent automatic maintenance of the room temperature during the operation time and decreasing the temperature in the idle time and on weekends

Taking into account the fact of availability at the plant of natural gas, there is proposed to install on the areas and in some workshops infrared gas-fired heating systems The suggested systems allow to improve the efficiency of the heat energy utilization by 40 to 50 % and decrease the energy sources cost by 40 to 45 %

| | | |
|---|---|---|
| Expected annual heat saving | - | 1,129 Gcal or US $31,386 |
| Expected annual saving due to gas burning | - | US $15,580 |
| Project cost | - | US $122,000 |
| Payback period | - | 31 months |

## 8 EFFECTS OF IMPLEMENTING THE RECOOMMENDATIONS ON ENVIRONMENT

Saving fuel-and-energy resources that can be gained in the result of implementing the developed ECOs is directly connected with decreasing the harmful emissions into the environment

Initial data for calculations

According to the data from the Ministry of Energy of Ukraine, the average quantity of the harmful emissions per 1,000 kW h of the produced electric power was as follows

| | |
|---|---|
| CO - carbon monoxide - | 0 51 kg |
| $No_x$ - nitrogen oxides - | 2 177 kg |
| $SO_2$ - sulfur dioxide - | 9 89 kg |
| Ash - | 4 365 kg |

To estimate the decreasing of emissions into the atmosphere if there is heat saving, the consumer has the following average specific emissions per 1 Gcal of the produced heat providing combustion of natural gas in the steam boilers operated at CHPs

CO - 0 03 to 0 04 kg/Gcal (the average value is 0 035 kg/Gcal)
$No_x$ - 0 26 to 0 28 kg/Gcal (the average value is 0 27 kg/Gcal)

Calculation of decreasing harmful emissions into the atmosphere

- The expected annual energy saving resulting from implementation of the ECOs with a short-term payback period

  - heat energy - 6,971 Gcal
  - electric power - 4,978,000 kW h

- Decreasing of the harmful emissions into the atmosphere

| | |
|---|---|
| CO - | 6,071 Cal 0 035 kg/Gcal + 4,9778,000 kW h 0 5 kg/$10^3$ kW h = 2,733 kg |
| $NO_x$ - | 6,971 Gcal 0 27 kg/Gcal + 4,978,000 kW h 2 2 kg/$10^3$ kW h = 12,834 kg |
| $SO_2$ - | 4,978,000 kW h 9 9 kg/$10^3$ kW h = 49,282 kg |
| Ash - | 4,978,000 kW h 4 4 kg/$10^3$ kW h = 21, 903 kg |

The total decreasing of the amount of the harmful emissions - 86 75 tonnes per year

At the CHP in preparation of feed water for the stream boilers plants for sodium-hydrogen cautionization are used The annual condensate saving of 9,650 t will decrease the quantity of the regenerating solution and its discharging into the canalization Performing calculations of saving NaCl and $H_2O_4$ and decreasing emissions did not seem to be possible due to absence of the required data from the CHP

# APPENDIX A ENERGY CONSERVATION OPPORTUNITIES

## Energy conservation opportunities

| | |
|---|---|
| **ECO - 01** | Introduction of an energy management program |
| **ECO - 02** | Automatic separation of the "clean" and "dirty" condensate |
| **ECO - 03** | Monitoring the quality of the steam utilizing equipment |
| **ECO - 04** | Automatical control of the condensate quality |
| **ECO - 05** | Installation of steam traps on the calorifers in the wood processing workshop |
| **ECO - 06** | Automatical steam consumption metering |
| **ECO - 07** | Monitoring the temperature schedule of the heat consuming equipment |
| **ECO - 08** | Identification and repairing gas leaks |
| **ECO - 09** | Monitoring the electric motor drives capacity |
| **ECO - 10** | Automatic system for controlling the turbine compressor |
| **ECO - 11** | Automation of the electric power consumption metering system |
| **ECO - 12** | Replacement of the external lighting |
| **ECO - 13** | Automation of the compressed air metering system |
| **ECO - 14** | Steam traps |
| **ECO - 15** | Infra-red gas-fired heating systems |

**ECO - 01** Introduction of an energy management program

Description of the opportunity

The basic instrument in decreasing energy consumption by using it more effectively is energy management Energy management is a management system based on fulfilling typical measurements and checkings providing such an operation of the plant when there is consumed only the amount of energy required for the processing needs The plant management I very well aware of the benefits given by the energy efficiency, but there are no technical facilities for quantitative assessment of financial advantages of the energy saving measures

While performing the audit there were found a lot of costless and low-cost energy saving opportunities that can become of a significant benefit

For example, estimation of the efficiency of operating the melting furnaces, fans and other equipment of the similar will allow to operate the most efficient equipment and to withdraw out of operation the inefficient one

Providing availability at the enterprise of a measuring system for a quantitative and qualitative assessment of energy saving opportunities, introduction of an energy management system is possible

It is proposed to provide for the enterprise the required measuring instrumentation to identify and quantitatively assess the energy saving opportunities, as well as independently determine the priority of the costs on energy saving and to decrease energy consumption and monitor energy saving

The set of the equipment that would be useful for the plant should include the following

- a contactless thermometer
- a wire thermoanemometer
- a three-phase energy analyzer
- a tachometer
- a digital contact thermometer
- an illumination meter
- an ultrasonic contactless flow rate meter
- a watt-meter
- a computer with a printer

If a set of portable devices is available, there is proposed to introduce at the plant a position of the energy manager It is reasonable for the energy manager to undergo a special training course in the Energy Managers Training Center Center (Kyiv City, National Technical University of Ukraine "Kyiv Politechnical Institute") The basic task of the energy manger is monitoring of energy using systems, development of real rates with the aim of continuous monitoring for their observation by the energy users and decreasing the total energy consumption at the plant

The issues to be in charge of the energy manager work with the plant personnel should be included concerning the following aspects

- training the plant personnel to the energy management practice,

- stimulation of the plant personnel in finding energy conservation opportunities at their production areas and in their workshops,
- awarding the plant personnel for finding out potential energy conservation opportunities,
- quantitative estimation of the economic effect for each of the energy conservation opportunities and of the payback period for the corresponding investments,
- planning and correction of a 5-year strategy plan of the energy management development aimed at implementation of energy conservation opportunities,
- applying for allocation of funds for on energy saving projects,
- implementation of energy conservation opportunities if they are financed or costless,
- following-up of the energy conservation opportunities after their implementation and a quantitative assessment of the actual saving of the costs,
- dissemination of the successful experience of implemented energy conservation projects as well as their lessons,
- repetition of successful energy conservation projects at all production areas and in all workshops at the given plant

Calculation of a yearly saving of costs

The world experience and practice prove that implementation of an energy management system by using the above equipment can give a yearly energy saving between 2 and 5 per cent

The energy saving will be as follows

1 Electric power 15,961,000 kW h • 0 025 = 399,000 kW h
2 Thermal energy 47,219 GCal • 0 025 = 1,180 500 GCal
3 Natural gas 1,509,000 $m^3$ • 0 025 = 37,750,000 $m^3$

Calculation of a yearly saving of costs

1 If 1,000 kW h cos USD 53 7, the saving of the electric power cost will be
399,000 kW h • USD 53 7 = USD 21,426
2 If 1 GCal costs USD 29 15 the saving on steam will be
25,600 GCal • 0 025 • USD 29 15 = USD 18,656
3 If 1 GCal costs USD 27 8, then the saving on hot water will be
21,600 GCal • 0 025 • USD 27 8 = USD 15,012,
in total, the cost of saving on steam and hot water will be USD 33,668

If 1,000 $m^3$ cost USD 83, the saving on gas will be
37,750 $m^3$ • USD 83 = USD 3,133

The total saving of the energy costs will be
USD 21,426 + USD 33,668 + USD 3,133 = USD 58,227

Commissioning costs

The approximate cost of a set of the measuring instruments is USD 24,000
The costs of implementation of an energy management system, as it is shown by practice, are 40 - 46 per cent of the expected saving, or USD 49,958 • 0 43 = USD 24,979
The total costs USD 24,000 + USD 24,979 = USD 48,979
The simple payback period USD 48,979 USD 58,227 = 0 8 year ≈ 10 months

**ECO - 02** Automatic separation of the "clean" and "dirty" condensate

In accordance with the agreement with the CHP the enterprise shall return 45 per cent of the condensate In fact, due to the results of the operation during 10 months in 1997, the condensate losses are 80 to 85 per cent The annual condensate losses are approximately between 34, 500 t or 3,100 Gcal of heat The cost of the annual heat and condensate losses is about US $230,000 The main cause of an increased discharge of all the condensate into the canalization is mixing the "clean" condensate with the "dirty" one

There happened that during a day and even a month all the condensate available at the enterprise was discharge into the canalization at the CHP, as utilization of that condensate was impossible For example, in June 1997 the condensate losses during the month were 97 per cent (3,758 t), on October 12 (254 t) and 19 (264 t) 100 per cent of the condensate were discharged

Besides the damages due to the direct losses of heat with the discharged condensate, the enterprise bears losses due to an increased payment rate of US $5 4 per 1 tonne of condensate (the penalty sanctions of the Heat Supply Station)

It is proposed to install on the joint condensate ducts after the electric plating tanks and the phosphotation tanks automatic systems for controlling the condensate quality and its discharging to prevent its mixing with the "clean" one The proposed system automatically determines the level of contamination, controls the valves with solenoid drives and discharges the condensate into the canalization in case if its conductivity happens to be higher than the accepted level, as well as activates the alarm system Implementation of the given measure will enable to increase the condensate return by 15 to 20 per cent

Calculation of the expected heat saving

| | | |
|---|---|---|
| 1 Improvement of the condensate return (set) | - | 15 % |
| 2 The annual steam consumption | - | 43,200 t |
| 3 The expected annual condensate saving | | |
| 43,200 t 0 15 = 6,480 t | | |
| 4 The heat content value of the condensate (90°C) | - | 90 kcal/kg |
| 5 Annual heat saving | | |
| 6,480 $10^3$ 90 kcal/kg = 583 2 Gcal | | |
| 6 1 Gcal of heat costs | | US $27 8 |
| 7 Cost saving | | |
| 583 2 Gcal US $27 8 = US $16,213 | | |

Calculation of the cost saving in regard of the payment for condensate

| | | |
|---|---|---|
| 1 The cost of 1 tonne of the condensate lost in case of its non-returning in addition to 45 per cent (the penalty sanctions of the heat and Power Supply Station) | - | US $5 4 |
| 2 Annual cost saving | | |
| 6,480 t US $5 4 = US $34,992 | | |
| Total cost saving | | |
| US $16,213 + US $34,992 = US $51,205 | | |

Suggested equipment and its cost

There is proposed to introduced a Spirax Sarco automated condensate contamination detection system (CCD), solenoid valves for supplying the clean condensate to the boiler-house and the contaminated condensate to wastes, a condensate sample cooler

The cost of the equipment (one system)

| | | |
|---|---|---|
| • condensate contamination detection system (BC 3000 controller, S20 sensor chamber and CP sensor joint gasket, PT2 plugtail, TP20 temperature sensor, $2^1/_4$" Mod 10 ball valves) | - | US $1,980 |
| • SC20 sample cooler | - | US $580 |
| • DN50 solenoid isolation valve (2 units) | - | US $3,000 |
| • DCV2-type check valve | - | US $180 |
| TOTAL | | US $5 740 |

The total cost of one system with taking into account a 30-per cent addition for transportation services and other costs

US $5,740 1 3 = US $7,462

The cost of the installation works (set as 30 per cent of the equipment cost)

US $5,740 0 3 = US $1,722

The overhead expenses (set as 20 per cent of the equipment cost)

US $5,740 0 2 = US $1,148

The total cost of one system

US $7,462 + US $ 1,722 + US $1,148 = US $10,322

The total cost of two systems

US $10,322 2 = US $20,664

The simple payback period US $20,664 US $51,205 = 0 4 yr ≅ 5 months

**ECO - 03** Monitoring the quality of the steam utilizing equipment

One of the causes of the condensate getting contaminated is imperfect sealing of the steam heaters or "jackets" of the electric plating tanks or of some other equipment that is in contact with possible contaminators Information concerning the degree of the condensate purity as well as about impossibility to utilize that is received from the CHP

There is no performing regular control of the quality of the condensate in regard of the steam utilizing equipment, which does not allow to organize in due time discharging the condensate into the canalization system for the period of eliminating the contamination cause This increases the heat and condensate losses at the enterprise

It is proposed to use at the plant a portable instrument - a condensate conductivity meter Availability of the instrument allows to arrange measurements of the quality condensate after each tank or an equipment unit, to carry out monitoring the whole condensate system at the enterprise and to provide fulfillment of repair works In case of activating the automatic system for discharging the "dirty" condensate, there is an opportunity to check quickly the source of the contamination and arrange for some time discharging the condensate from it into the canalization

Calculation of the expected heat saving (electric plating area)

- The amount of the condensate returned per hour with taking into account the quantity used for warming-up (due to the data from the enterprise) - 3,700 kg/h
- Number of the annual operation hours (one-shift operation basis) - 1,900 h
- Amount of the annually returned condensate
  3,700 kg/h 1,900 = 7,345,000 kg = 7,345 t
- The percentage of the condensate returned form the enterprise (due to the data for 1997) - 20%
- The amount of the annually lost condensate
  7,345 t (1- 0 2) = 5,876 t
- The expected condensate saving (set) - 20%
- The amount of the saved condensate
  5,876 t 0 2 = 1,175 t
- Heat content of the condensate (90°C) - 90 kcal/kg
- Annual heat saving
  1,175 $10^3$ 90 kcal/kg = 105 8 Gcal
- 1 Gcal of heat costs US $27 8
- Cost saving
  105 8 Gcal US $27 8 = US $2,941

Calculation of the expected saving on payment for the condensate

1 tonne of condensate costs (planned losses) - US $1 35
Cost saving
1,175 t US $1 35 = US $ 1,586
Total cost saving
US $2,941 + US $1,586 = US $4,527

The expected saving on the phosphotation area (the steam consumption is
1,850 kg/h or 50 per cent against that on the electric plating area)
US $4,527  0 5 = US $2,263
All in all the total saving
US $4,527 + US $2,263 = US $6,790

Suggested equipment and its cost

There is proposed a portable instrument - a conductivity meter of the Spirax Sarco MS1 type for TDS testing The instrument costs US $500

The cost of the instrument with taking into consideration additional expenses (30 per cent of the cost of the instrument)
US $500  1 3 = US $650
The plant needs three instruments (the electric plating area, the phosphotation area, the condensate pumping station) So the total cost of the instruments
US $650  3 = US $1 950

The simple payback period US $1,950  US $6,790 = 0 3 yr ≅ 4 months

**ECO - 04** Automatical control of the condensate quality

The CHP providing the plant with steam set high requirements to the quality of the steam to be returned The returned steam is supplied to the "clean" condensate tanks at the CHP If from the plant there is supplied "dirty" condensate, it becomes mixed with the "clean" condensate in the tanks, so the heat Supply Station set sanctions for the whole contaminated condensate and loses heat

There is no at the plant pump station operative detection of coming of "dirty" condensate, which does not allow to stop in due time its pumping to the CHP and to undertake measures aimed at identification of the contamination source

It is proposed to install at the condensate pumping station an Spirax Sarco automatized condensate contamination detection system and a condensate sample cooler Implementation of the proposed measure will enable to save heat and condensate losses by 2 to 3 per cent (set)

Calculation of the expected heat saving

| | | |
|---|---|---|
| 1 Increase of amount of the returned condensate | - | 2 5% |
| 2 The annual steam consumption | - | 43,200 t |
| 3 The expected annual condensate saving | | |
| 43,200 t 0 025 = 1,080 t | | |
| 4 The heat content of condensate (90$^0$C) | - | 90 kcal/kg |
| 5 Annual heat saving | | |
| 1,080 $10^3$ kg 90 kcal/kg = 97 Gcal | | |
| 6 1 Gcal of heat costs | | US $27 8 |
| 7 Cost saving | | |
| 97 Gcal US $27 8 = US $2,697 | | |

Calculation of the cost saving on payment for condensate

| | | |
|---|---|---|
| 1 The cost of 1 tonne of the lost condensate (penalty sanctions) | - | US $5 4 |
| 2 Cost saving | | |
| 1,080 t US $5 4 = US $5,832 | | |

The total cost saving US $2,697 + US $5,832 = US $8,529

Suggested equipment and its cost

| | | |
|---|---|---|
| • Spirax Sarco condensate contamination detection system (CCD) | - | US $1,980 |
| • Spirax Sarco SC20 sample cooler | - | US $580 |

TOTAL

The total cost of the system with taking into account a 30 per cent addition (transportation and other expenses)

US $2,560 1 3 = US $3 328

The cost of the installation works (set as 30 per cent of the equipment cost)

US $2,560 0 3 = US $768

The overhead costs (set as 20 per cent of the cost of the equipment)

US $2,560 0 2 = US $512

The total expenses

US $3,328 + US $768 + US $512 = US $4,608

<u>The simple payback period</u> US $4,608  US $8,529 = 0 5 yr ≅ 6 months

**ECO - 05** Installation of steam trapping assemblies on the calorifers in the wood processing workshop

In the wood processing workshop two calorifer plants are installed for heating the air supplied into the drying chambers In accordance with the energy balance of the plant the workshop consumes about 3 5 per cent of the steam consumed by the plant, or 1,500 t per year The calorifer plants have no steam traps, which significantly decreases the efficiency of their operation

In case of switching-off of the fan, the steam supply to the calorifer is not stopped, and the stream "flashes" to the condensate pumping station, at the station there is lost due to the second boiling of the condensate The measurements made by means of MIKRON instrument showed that the temperature of the steam at the input of the calorifer was 149$^0$C, while the temperature in the condensate duct was 135$^0$C

It is proposed to install on each calorifer plant steam trapping assemblies with float steam traps Implementation of the proposed measure will improve the efficiency of the calorifers operation by 10 to 15 per cent

Calculation of the expected heat saving

| | | | |
|---|---|---|---|
| 1 | Improvement of the calorifer efficiency (set) | - | 10% |
| 2 | The stream consumption percentage in the workshop against the total consumption at the plant | - | 3 5% |
| 3 | Annual stream consumption by the enterprise | - | 30,700 cal |
| 4 | Annual stream consumption by the workshop 30,700 Gcal 0 035 = 1,075 Gcal | | |
| 5 | Expected annual heat saving 1,075 Gcal 0 1 = 107 5 Gcal | | |
| 6 | 1 Gcal of heat costs | | US $27 8 |
| 7 | Cost saving 107 5 Gcal US $27 8 = US $2,989 | | |

Suggested equipment and its cost

The steam trapping assembly including the following parts (Spirax Sarco)

| | | |
|---|---|---|
| • DN25 FT14 - 10TV steam trap | - | US $440 |
| • DN25 Fig 33 strainer, flanged | - | US $110 |
| • DN25 DCV2 wafer check valve | - | US $90 |
| • Spare parts | - | US $50 |
| TOTAL | | US $690 |

The cost of two sets of the equipment US $690 2 = US $1,380
The total cost of the system with taking into account the 30-% addition on the transportation expenses and other expenses
US $1,380 1 3 = US $1,794
The cost of the installation works (set as 30 per cent of the equipment cost)
US $1,380 0 3 = US $414
The overhead costs (set as 20 per cent of the equipment cost)
US $1,380 0 3 = US $276
The total cost

US $1,790 + US $414 + US $276 = US $2,484

<u>The simple payback period</u> US $2,484  US $2,989 = 0 83 yr ≅ 10 months

**ECO - 06** Automatical steam consumption metering

The steam consumption at the plant is about 30,700 Gcal (43,000 t), which costs US $895,000 (1 Gcal = US $29 25) The condensate return must be 45 per cent or about 1,400 Gcal per year on the sum of US $64,000 (1 Gcal of condensate costs US $1 35)

Commercial metering of the heat energy is fulfilled on the territory of the CHP that is located at the distance of about 650 m from the plant At the plant there is no station for metering the consumption and measuring the parameters of the consumed steam and those in regard of the condensate The data concerning the heat sources consumption are received from the Heat Supply Station in regard of the 24-hour consumption, and they are entered into the register book There is not inside the plant any technical metering of the steam consumption in regard of separate consumers

As a matter of act, it is impossible to fulfill at the enterprise a steam-and-condensate balance, to estimate the efficiency of the heat energy utilization, to develop a standard basis as well as to implement a system for the energy consumption monitoring and target setting

It is proposed to install at the enterprise an automatic system for commercial metering the steam and condensate consumption There is planned to arrange a commercial stream and condensate metering system at the central heat station #51 and a technical stream metering system in 6 points on the main consuming area of the plant

From experience, the expected saving resulting from introduction of the own automatical metering system and of introduction of the energy consumption monitoring and target setting system will be not lower than 5 per cent

Calculation of the expected heat saving

| | | | |
|---|---|---|---|
| 1 | Annual heat consumption | - | 30,700 Gcal |
| 2 | 1 Gcal of heat costs | - | US $29 15 |
| 3 | The expected saving | - | 5% |
| 4 | The expected heat saving<br>30,700 Gcal 0 005 = 1,535 Gcal | | |
| 5 | Cost saving<br>1,535 Gcal US $29 15 = US $44,745 | | |

Suggested equipment and its cost

There is proposed to install *ITEK* metering and monitoring system manufactured by ENERGY Research and Production Association (the city of Kyiv, Ukraine) This equipment is metrologically certified in Ukraine and it is designed for continuous or regular measuring/registration of physical parameters

The cost of equipment

- Commercial one-point metering the steam consumption - US $550
  (300°C, 6 barg, D = 428 mm, G = 40 t/h)
- Technical 6-point metering the steam consumption - US $20,900
  (300°C, 3/6 barg, D = 102 to 219 mm, G = 5 to 20 t/h)

- Commercial one-point metering the steam consumption - US $4,400
  ($90^0$C, 3 barg, D = 159 mm, G = 20 $m^3$/h)

  TOTAL US $25,850

The cost of the installation works (set as 20 per cent of equipment cost)

US $30,800 0 2 = US $6,160

The overhead costs (set as 10 per cent of the equipment cost)

US $30,800 0 1 = US $3,080

The total cost

US $30,800 + US $6,160 + US $3,080 = US $40,040

<u>The simple payback period</u> US $40,040 US $44,745 = 0 9 yr ≅ 11 months

**ECO - 07** Monitoring the temperature schedule of the heat consuming equipment

The enterprise has a branched steam-and-condensate distribution system as well as a heat supply system, and at the same time there are practically no operation pressure gauges and thermometers for controlling the operation mode of the equipment It is impossible to analyze the efficiency of the heat consuming plants, nor to calculate the specific energy consumption, nor to identify in due time failures of the equipment

It is proposed to introduce into the plant practice a *Raynger ST6* portable infra-red emission thermometer, which will enable to fulfill monitoring of the heat consuming equipment, to arrange a regular control (1 to 2 times a week) of its operation efficiency and to undertake in due time measures aimed at decreasing losses of the heat energy The expected improvement of the heat utilization efficiency is 0 3 to 0 5 per cent

Calculation of the expected heat saving

| | | | |
|---|---|---|---|
| 1 | The expected saving | - | 0 4 % |
| 2 | Annual steam consumption | - | 30,700 Gcal |
| 3 | The expected heat saving<br>30,700 Gcal 0 04 = 123 Gcal | | |
| 4 | 1Gcal of heat costs | - | US $29 15 |
| 5 | Cost saving<br>123 Gcal US $29 15 = US $3,585 | | |

Suggested equipment and its cost

The cost of a *Raynger ST6* portable infrared emission thermometer - US $1,000

The simple payback period US $3,585 US $1,000 = 0 35 yr ≅ 4 months

**ECO - 08** Elimination of the compressed air leaks

The enterprise has a branched network of the compressed air ducts While walking around the workshops there were found compressed air leaks at the non-operated equipment The leaks were observed at the detachable joints of the pipe lines of the stamping and pressing equipment The stop valves for disconnecting the non-operated areas and workshops were disabled

There was no control of the compressed air supply The only instruments controlling the parameters of the compressed air on the spots of the compressed air consumption and production were pressure gauges During 9 months in 1997 the total production of the compressed air was 35,280,000 $m^3$ costing US $268,000

It is proposed to use at the enterprise a portable detector of gas and air mixture leaks, which will enable to fulfill a regular checking of the threaded and flanged joints, fixture and equipment seals as well as to eliminate the leaks This will permit, in the opinion of the experts, to decrease the compressed air losses at the enterprise not less than by 5 per cent

The practice of operating equipment consuming the compressed air shows that, at the pressure of 5 $kg/cm^2$, a hole with the diameter of 1 mm leads to a loss of 3 5 $m^3/h$, which corresponds to losing annually 18,600 $m^3$ or US $141 (supposing a 5-day working week and disconnection of the compressors for the weekends)

Calculation of the expected saving

| | | | |
|---|---|---|---|
| 1 | Average annual compressed air consumption expected in 1997 | - | 47,035,000 $m^3$ |
| 2 | 1,000 $m^3$ of the compressed air cost (due to the data from the plant) | - | US $7 6 |
| 3 | The expected consumption of the compressed air | - | 5 % |
| 4 | The expected saving<br>47,035,000 $m^3$ 0 05 = 2,352,000 $m^3$ | | |
| 5 | Cost saving<br>2,352,000 $m^3$ US $7 6 = US $17,873 | | |

Suggested equipment and its cost

The cost of a portable gas and air mixtures detector with taking into account the transportation and other expenses US $2,000
The plant needs 3 portable detectors
The total cost US $6,000

The simple payback US $6,000 US $17,873 = 0 34 yr ≅ 4 months

**ECO - 09** Monitoring the electric motor drives capacity

The electric power consumption of main processing needs (due to the data for 9 month in 1997) is about 85 per cent of the electric power consumption of the whole plant, which is 11,420,000 kW h per year costing US $613,300

The largest electric power consumption is for the electric driving the pumping and ventilating equipment

If any electric motors failed in the course of the enterprise operation, they were replaced with no taking into consideration the nominal required capacity As the measurements showed, only in one workshop with the painting and drying combined area, where the installed designed capacity of the electric motors for the ventilation systems is 2,589 kW, even for the equipment of the same type there are used motors of different installed capacity often exceeding the required value

Besides, taking into consideration the fact that 20 out of 35 transformer stations have two installed transformers each, provision of operative control of the power factor value is more complicated

It is proposed to introduce at the enterprise an operative control of the electric power actually consumed by the electric motors (primarily by the pumps and fans) by means of a set of portable measuring instruments (a clamp-on digital wattmeter) and by measuring the power factor (a power factor meter) Implementation of the proposed measure will enable to make monitoring of the real load of the electric motors, to analyze their efficiency and to organize their planned replacement with more effective ones Putting this measure into practice will enable to save annually not less than 1 per cent of the electric power consumed by the processing lines

Calculation of the expected electric power saving

| | | | |
|---|---|---|---|
| 1 | The annual electric power consumption (expected in 1997) | - | 15,250,000 kW h |
| 2 | 1,000 kW h costs | - | US $53 7 |
| 3 | The expected saving of the electric power consumption | - | 1% |
| 4 | The expected saving<br>15,250,000 kW h x 0 01 = 152,500 kW h | | |
| 5 | The cost saving<br>152,500 kW h x US $53 7 = US $8,189 | | |

Suggested equipment and its cost

The cost of one set of the portable instruments *200 A Wattprobe* and *TIF 2300 Power Factor Meter*, with taking into account the overhead and transportation costs, is US $1,000

The cost of fulfilling monitoring and analysis of the equipment load efficiency (set) is US $5,500

The total cost is US $6,500

The simple payback period - US $6,500 US $8,189 = 0 8 ≅ 10 months

**ECO - 10** Automatic system for controlling the turbine compressor

Analysis of a 24-hour schedule of the electric power consumption by a *K-250-61-2* turbine generator made on November 26, 1997 showed that the peak load (of 1,600 kW) coincided with the beginning of the working day When the working shift was over, the load dropped down, and at night it was in average of 1,350 kW, which is 85 per cent of the nominal load

In accordance with the turbine compressor passport data, the manufacturer limits the number of its shut-downs to 50 times a year, as each starting the compressor decreases its resource not less than by 50 hours That is why the compressor is started two hours before the beginning of the shift on Monday and it is switched off when the shift is over on Friday Introduction into the compressor operation practice of a deep discharge mode would permit to decrease the electric power consumption to
350 kW (22 per cent of the nominal load) But such a mode is possible only providing an automatic control

It is proposed to install an automatic system controlling the turbine compressor The system is planned to be installed on the turbine compressor with the capacity of 1,600 kW

Calculation of the expected electric power saving

| | | | |
|---|---|---|---|
| 1 | The average life time of a turbine compressor providing its lower loading (16 hours x 4 days x 48 weeks) | - | 3,072 hours |
| 2 | 1,000 kW of the electric power costs | - | US $53 7 |
| 3 | Current electric power consumption | - | 1,350 kW |
| 4 | The electric power consumption providing a deep discharging | - | 350 kW |
| 5 | The expected saving (1,350 kW - 350 kW) 3,072 hours = 3,072,000 kW h | | |
| 6 | The cost saving 3,072,000 kW h x US $53 7 = US $164,966 | | |

Suggested equipment and its cost

The cost of a system automatically controlling the turbine compressor
(City of Mykolayiv, Ukraine) - US $21,620
The cost of the design works (set as 10 per cent of the equipment cost)
US $21,620 0 1 ≅ US $2,200
The cost of the installation works (set as 30 per cent of the equipment cost)
US $21,620 0 3 = US $6,500
The cost of the adjustment works (set as 75 per cent of the equipment cost)
US $21,620 0 75 = US $16,200
The overhead costs (set as 15 per cent of the equipment cost)
US $21,620 0 15 = US $3,300
The total cost
US $21,620 + US $2,200 + US $6,500 + US $16,200 + US $3,300 = US $49,820

The simple payback period US $49,820 US $164,966 = 0 3 yr ≅ 4 months

**ECO - 11** Automation of the electric power consumption metering system

The cost of the electric power consumed by the plant in 1996 was US $857,000

At the present time it is impossible at the enterprise to assess operatively the electric power consumption and its efficiency, nor to develop an adequate guiding basis and to introduce a monitoring and targeting system

It is proposed to install and to introduce into practice at the enterprise an automatic system for commercial and technical metering as well as monitoring the electric power consumption

There is planned to organize commercial metering of the electric power consumption at L-12 substation, while its technical metering is to be arranged at 35 transformer units From experience and on the ground of the expert estimations one can expect that the possible saving, resulting from implementation of a system for commercial and technical metering as well as for monitoring the electric power supply, will be not lower than 5 per cent

Calculation of the expected electric power consumption saving

1 The average annual electric power consumption - 15,250,000 kW h
2 1,000 kW h costs - US $53 7
3 The expected saving (5 %)
15,250,000 kW h x 0 05 = 762,500 kW h
4 Cost saving
762,500 kW h x US $53 7 = US $40,946

Suggested equipment and its cost

There is proposed to install a system for commercial and technical metering as well as monitoring of the electric power consumption manufactured by *ENERHOZBEREZHENNIA* Company (the city of Lviv, Ukraine) that is certified in Ukraine and meets the set requirements

| | | |
|---|---|---|
| The cost of the equipment (with its installation) | - | US $10,270 |
| • the basis system | - | US $11,892 |
| • auxiliary substations | - | US $5,500 |
| • auxiliary meters | - | US $5,500 |
| • cables (*KVVG*-type pilot cable, screened) (2 x 1 5) 1,200 m | - | US $3,250 |
| TOTAL | | US $30,912 |

The overhead costs (set as 30 per cent of the equipment cost),
US $30,912 0 3 = US $9,274
The total cost
US $30,912 + US $9,274 = US $40,186

The simple payback period US $40,186 US $40,946 = 1 0 yr ≅ 12 months

**ECO - 12** Replacement of the external lighting

*Description of the opportunities*

The external lighting system includes the following lighting equipment

- decorative lighting (DRL-125 lamps - 50 units, the total capacity is 6 25 kW),
- open areas lighting (G-003-2000 lamps, G-007-2000, with DRI-2000 lamps - 36 units),
- floodlights with DRL-400 lamps (the total capacity is 15 3 kW),
- Zh-001 searchlights with DNaT-250 lamps - 25 units),
- DRL-250 general lighting lamps - 245 units

The total installed capacity of the external lighting system fixture at the plant is 160 kW

It is proposed to consider a project of replacing the DRL-250 high-pressure mercury lamps used for the external lighting of the plant territory with DNaT-100-3 high-pressure sodium lamps while using the currently existing fixture and the starting equipment of the corresponding capacity produced by *INTERFACE* Company (the city of Vinnytsia, Ukraine) The light flux of a DRL-250 lamp is 10,000 lm, and its nominal operation time is 2,400 hours A DNaT-100-3 sodium high-pressure lamp of the national production (the town of Poltava) has a longer life time - it is 6,000 hours with the light flux of 9,000 lm

Calculation of the annual energy saving

Electric power consumption by an SZPR-250 illuminant equipped with a DRL-250 mercury lamp

$P_{il1} = (P_{l1} + P_{S1})$ cosφ,

where

$P_{l1} = 250$ W is the power capacity of a DRL-lamp,

$P_{S1} = 54\ 1$ W is the power capacity of the starting fixture,

cosφ = 0 98

$P_{il1} = (250 + 54\ 1)$ 0 98 = 298 W or 0 298 kW

The annual electric energy consumption by 245 illuminants supposing in average a 10-hour operation during a 24-hour day is

$P_1 = P_{il1}$ n F,

where

n=245 is the number of the illuminants,

F=10 365 = 3,650 hours - the annual stock of the illuminant operation time,

$P_1 = 0\ 298$ 245 3,650 = 266,487 kW h

The electric power consumption by an SZPR-250 illuminant equipped with a DNaT-100-3 sodium lamp

$P_{il2} = (P_{l2} + P_{S2})$ cosφ,

where

$P_{l2} =$ 100 W is the power capacity of a DRL-lamp,

$P_{S2} = 5$ W is the power capacity of the starting fixture,

$P_{il2} = (100 + 7) = 107$ W or 0 107 kW

The annual electric energy consumption by 245 illuminants supposing in average a 10-hour operation during a 24-hour day is

$P_2 = P_{il2}$ n F = 0 107 245 3,650 = 95,685 kW h

The annual electric power saving in the physical terms if operating DNaT-100-3 lamps

$P_1 - P_2 = 266{,}487 - 95{,}685 = 170{,}802$ kW h

Calculation of the annual cost saving

The annual cost saving in the pecuniary form supposing that 1 kW h costs at the plant US $0 0537

170,802 0 0537 = US $9,200

The cost saving on purchasing DRL-250 lamps (as their life time is 2 5 times longer)

245 4 8 = US $1,200

The total annual cost saving

US $9,200 + US $1,200 = US $10,400

The cost of commissioning works

The cost of DNaT-100-3 lamps with a new starting fixture - 245 units at the price of US $30 per unit

245 units US $3 = US $7,350

The overhead costs (set as 30 per cent of the equipment cost)

US $7,350 0 3 = US $2,205

The total cost

US $7,350 + US $2,205 = US $9,755

The simple payback period US $9,755 + US $10,400 = 0 94 yr ≅ 11 months

**ECO - 13** Automation of the compressed air metering system

Currently at the plant a lot of compressed air is used at the basic processing lines There is branched system of trunk pipe ducts supplying the compressed air produced in the energy workshop and at the compressor station to the users The users are in 13 remote from each other processing lines and production buildings No instruments for metering the compressed air consumption are available at the places of its production, nor at the places of its consumption

The quantity of the produced compressed air is determined by calculation using the approximate formula 1 kW h corresponds to 10 $m^3$ The technical metering of the consumption at separate processing areas and in separate workshops is performed approximately, by calculation In accordance with the data provided by the plant, it was found that during 9 months in 1997 the total amount of the compressed air produced at the plant was 35,280,000 $m^3$ that costs US $268,000

Absence of a single system of the instruments registering the compressed air consumption makes it impossible to operatively assess and control the consumption of the compressed air

It is proposed to install at the plant and introduce into its practice an *ITEK* instrumentation system for energy consumption metering and controlling manufactured by *ENERGY* Research and Production Association (the city of Kyiv, Ukraine) There is planned to arrange technical metering of the compressed air consumption at the outlet pipe line of the energy unit and the compressor station, at the inlet pipe lines of the body-and-assembling building, press-and-preparation workshop, bus assembling workshop, as well as commercial metering at the inlet pipe line of the Plant for Hydromechanic Transmissions Introduction of such a system, due to the experts' estimations, will enable to save not less than 5 per cent of the funds spent to produce compressed air

Calculation of the expected saving

1 Annual consumption of the compressed air — 47,035,000 $m^3$
2 1,000 $m^3$ of the compressed air costs US $7 6
3 The expected saving
47,035,000$m^3$ 0 05 = 2,352,000 $m^3$
4 The cost saving
2,352,000 $m^3$ US $7 6 = US $17,873

Suggested equipment and its cost

*ITEK* system for 6 points — US $20,930
Starting-up & commissioning works (set as 20% of the equipment cost)
US $20,930 0,2 = US $4,186

TOTAL US $20,930 + US $4,186 = US $26,116

The simple payback period US $26,116 US $17,873 = 1 46 yr ≅ 17 months

**ECO - 14** Steam traps

The enterprise consumers steam costing annually about US $895,000 In fact, more than 90 per cent of the steam consuming processing equipment is not provided with stream traps The "flashing" steam is supplied together with the condensate to the condensate pumping station where it is discharged into the atmosphere together with the secondary boiling stream Absence of steam traps is the main reason for a significant worsening the steam parameters, while the steam is being transported and distributed between the basic areas of the plant The required steam pressure (2 0 to 2 5 barg) is not provided to the final consumers

The measurements data received in the course of doing the energy audit are given in the table

| | Steam pressure, barg | Temperature, $^0$C |
|---|---|---|
| At the outlet from the CHP | 5 5 | 250 |
| In the main plant steam duct | 4 0 | 195 |
| At the outlet from Heat Station #51 at the Plant | 1 6 | 140 |
| At the inlet to the main building | 2 0 | 160 |
| At the inlet to the assembling and tests workshop | 1 1 | 130 |

Often, in case of decreasing the consumption of the heated medium ,or if the fans of the drying aggregates are dispowered, the steam consumption for the heat exchangers or calorifers do not go down The steam is directly "rushing" into the condensate collecting tanks An increased pressure in the condensate ducts causes problems with steam trapping at the steam consuming equipment of the final consumers, as there is no required pressure difference

The steam consuming equipment without provided steam traps operates inefficiently, especially in the mode of everyday "starting - switching-off", as the enterprise operates on a one-shift basis during a five-day week

Approximate calculation of the heat losses due to absence of steam traps

1 Annual steam consumption by the plant - 30,700 Gcal
2 Percentage of the steam processing equipment
with condensate returning (set) - 60 %
3 Annual steam consumption by the processing equipment
30,700 Gcal 0 6 = 18,420 Gcal
4 Decrease in the efficiency of the steam consuming equipment (set) - 10 %
5 Annual heat losses
18,420 Gcal 0 1 = 1,842 Gcal
6 1 Gcal of heat (steam) costs US $29 15
7 Annual cost of the heat losses
US $1,842 Gcal x US $29 15 = US $53,694

Approximate calculation of the losses with the flash steam

1 Pressure in the condensate receivers (reading from the pressure gauge) - 0 7 barg
2 Diameter of the vent line (2 units) - 150 mm

3 Approximate steam flow from the vent line
at the pressure of 1 barg (from a reference table
for the speed of 5 m/s) - 335 kg/h

4 The number of the annual operation hours (the enterprise operation
schedule) - 1985 h

5 The amount of the steam discharged into the atmosphere
335 kg/h 1,985 h = 664,975 kg ≅ 665 t

6 Steam specific enthalpy at the pressure of 1 barg - 646 5 kcal/kg

7 Annual heat losses
665 $10^3$ kg 646 5 kcal/kg = 430 $10^6$ kcal = 430 Gcal

8 1 Gcal of steam heat costs US $29 15

9 The cost of the annual heat losses
430 Gcal US $29 15 = US $12,535

10 The cost of 1 t of the lost condensate (set as the average value
between the planned price (US $1 35) and the fine (US $5 4) - US $3 38

11 The cost of the condensate losses
665 t US $3 38 = US $2,248

12 The total cost
US $12,535 + US $2,248 = US $14,783

It is proposed installing on the steam consuming equipment of steam trapping assemblies with steam traps corresponding to the type of the heat exchangers and to the mode of its operation

- on the steam and water heaters and calorifers - float steam traps
- on the coil heaters - balanced pressure thermostatic traps
- in the lower points of the steam ducts and steam manifold collectors - thermodynamic steam traps

Implementation of the proposed measure will improve the efficiency of the heat exchangers, prevent steam "flashing" and decrease the losses with the secondary boiling steam

Calculation of the expected saving

1 Improvement of the efficiency of the steam consuming equipment (set) - 10 %
2 The expected annual heat saving (an approximate estimate) - 1,842 Gcal
3 The annual cost saving - US $53,694
4 Decreasing the losses with the flash steam (set) - 50 %

5 The expected heat saving
430 Gcal 0 5 = 215 Gcal

6 The expected condensate saving
665 t 0 5 = 332 t

7 The annual cost saving
US $14,783 0 5 = US $7,391

The total cost saving US $53,694 + US $7,391 = US $61,085

Suggested equipment and its cost

- A float stream trapping assembly, flanged, BS 4504, of steel (a float steam trap, a strainer, FT43-10TV disk check valve)
  - DN25 - US $690
  - DN40 - S $1,300
  - DN50 - US $1,570
- Thermostatic steam trap (DN20 BPT 21U, flanged, BS 4504) - US $250
- Thermodynamic steam trap (DN20 TD32F, flanged, BS 4504) - US $260
- Stop valves, flanged, of steel
  - DN50 - US $350
  - DN40 - US $240
  - DN25 - US $195
  - DN20 - US $180

Approximate number of the required equipment

1 Steam and water heaters and calorifer plants
- Float steam traps

| | | |
|---|---|---|
| DN50 - 5 units | US $1,570 | 5 = US $7,850 |
| DN40 - 5 units | US $1,300 | 5 = US $6,500 |
| DN25 - 35 units | US $690 | 35 = US $24,150 |

TOTAL US $38,500

2 Coil heaters
- Thermostatic steam traps

DN20 - 20 units US $250 20 = US $5,000

3 Steam ducts and collectors
- Thermodynamic steam traps

DN20 - 20 units US $260 20 = US $5,200

4 Stop valves
- DN50 - 5 units US $350 5 = US $1,750
- DN40 - 5 units US $240 5 = US $1,200
- DN25 - 35 units US $195 35 = US $6,825
- DN20 - 40 units US $180 40 = US $7,200

TOTAL US $16,975

The total cost of the equipment - US $65,675

The total cost of the equipment with taking into account a 30-% addition for the transportation and other costs

US $65,675 1 3 = US $85,378

The cost of monitoring the steam and condensate equipment as well as that of precise choosing the equipment (set as 10 per cent of the equipment cost)

US $65,675 0 1 = US $6,568

The cost of the installation works (set as 30 per cent of the equipment cost)
US $65,675  0 3 = US $19,703

The overhead costs (set as 10 per cent of the equipment cost)
US $65,675  0 1 = US $6,568

The total cost  US $85,378 + US $19,703 + US $6,568 + US $6,568 = US $118,217

<u>The simple payback period</u> US $118,217  US $61,085 = 1 94 yr ≅ 23 months

**ECO - 15** Infra-red gas-fired heating systems

The enterprise requires annually for heating about 22,000 Gcal of heat costing US $555,000 35 to 40 per cent of that are used for heating the production rooms The basic type of the operated equipment is radiation heating systems and air heating systems The heat-transfer agent is water with the temperature of up to 130$^0$C

As it is knows from experience and from the world practice, the existing heating systems are not efficient, especially under conditions of availability of a significant amount of spare production area and that the plant operates on a one-shift basis There is practically absent automatic maintenance of the room temperature during the operation time and decreasing the temperature in the idle time and on weekends

Taking into account the fact of availability at the plant of natural gas, there is proposed to install on the areas and in some workshops infra-red gas-fired heating systems The suggested systems have a set of advantages as compared to the traditional ones

- Typical saving between 40 and 50 % of the heat energy
- Reducing the draughts and air movement, so increasing work force comfort and eliminates dust circulation problems
- Rapid heating a room to the required temperature
- Systems can be zoned so to provide varying zoned temperatures and operating times
- Opportunity of introducing automatic controlling during the idle time and on weekends
- Opportunity of introducing energy management
- Easy installing and servicing

It is proposed to install a new heating system in the mechanical processing workshop

Calculation of the expected energy saving

1 Annual heat energy consumption for heating purposes
(due to the data from the plant) - 2,258 Gcal
2 1 Gcal of heat costs US $27 8
3 Efficiency improvement (set) - 50 %
4 Annual heat saving 2,258 0 5 = 1,129 Gcal
5 The cost saving
1,129 Gcal US $27 8 = US $31,386

Calculation of the cost saving if to switch on gas-fired heating systems

1 The efficiency of the plant (set due to the data from the manufacturing companies) - 95 %
2 The calorific value of natural gas - 8,100 kcal/m$^3$
3 The quantity of the gas required for generating 1 Gcal of heat

1,000,000 kcal 8,100 kcal/m$^3$ 0 95 = 130 m$^3$

4 1,000 m$^3$ of gas costs US $83
5 The cost of the gas required for generating 1 Gcal of heat with taking into account 30-% overhead costs

(130 $m^3$ 1,000 $m^3$) US $83 1 3 = US $14

6 Annual heat consumption - 1,129 Gcal
7 The current cost of 1 Gcal of heat (in accordance with an agreement with the Heat Supply Station) - US $27 8
8 The cost saving
1,129 (27 8 - 14) = US $15,580

The total cost saving US $31,386 + US $15,580 = US $46,966

Suggested equipment and its cost

There is proposed to use infra-red gas ceramic heaters operated on natural gas of a low pressure of 200 to 300 mm $H_2O$, the capacity of the heater is 10 to 15 kW

The approximate cost of the equipment on the basis of the average figures - US $10 per 1 $m^2$ of the area to be heated

The area of the mechanical workshop (approximately) - 4,200 $m^2$

The cost of the equipment 4,200 $m^2$ US $10 = US $42,000

The cost of the commissioning works (the cost of the project, certification, gas supply line, installation works, the overhead costs) is set as equal to US $80,000

The total cost US $42,000 + US $80,000 = US $122,000

The simple payback period US $122,000 US $46,166 = 2 6 yr ≅ 31 months

# APPENDIX B SPECIFICATIONS FOR RECOMMENDED EQUIPMENT

**ECO - 02**

**Automatic Contaminated Condensate Drainage System - 2 systems**

***Designation*** monitoring the total dissolved solids (TDS) to detect the condensate contamination and avoid getting of the "dirty" condensate into the boiler feeding system, alarming, generating 4 to 20 mA signal for the automatic controlling the solenoid valves, automatic draining the contaminated condensate

Measurement Capacity

| | |
|---|---|
| TDS | 0 to 2,500 ppm |
| or conductivity | 0 to 3,000 μs/cm |

Setting

- a controller (220 V, 50 Hz)
- conductivity sensor
- temperature sensor
- stop valves
- sample cooler
- check valve
- solenoid valves

| | | |
|---|---|---|
| Condensate temperature | - | up to 150 $^0$C |
| Condensate pressure | - | up to 86 psig (up to 6 barg) |

***Model*** CCD from *Spirax Sarco*, or an equivalent

Approximate cost of the order - **US $13,200**

***Spirax Sarco, Inc***
P O BOX 119 Allentown, PA 18105, USA
Fax (610) 433-1346

or

*Armstrong International, Inc*
816 Maple Street, P O 408, Three Rivers
Michigan 49093, USA
Fax (616) 278-6555

**ECO - 03**

**Portable Conductivity Meter - 3 units**

***Destination*** metering the conductivity (TDS) of the boiler condensate and feeding water

Measurement ranges
0 to 200 μs/cm
0 to 2,000 μs/cm
0 to 20,000 μs/cm

| | |
|---|---|
| Temperature | 0 to 50 °C |
| Accuracy | ± 1 5 % at the temperature of 25°C |
| Resolution | ± 0 1 μs/cm |

***Model*** ***MSI*** from ***Spirax Sarco,*** or an equivalent

Approximate cost of the order **US $1,800**

***Spirax Sarco***
P O BOX 119 Allentown
PA 18105, USA
Fax (610) 433-1346

or

*Armstrong International, Inc*
816 Maple Street, P O 408, Three Rivers
Michigan 49093, USA
Fax (616) 278-6555

or

*Davis Instruments*
4701 Mount Hope Drive
Daltimore, MD 21215, USA
Fax (410) 358-0252

**ECO - 04**

**Automatic condensate contamination determination system - 1 system**

***Destination*** monitoring the total dissolved solids of the condensate to determine its contamination and avoid getting the "dirty" condensate into the boiler feeding system, alarming in case of rising the salt content above a permitted (set) value

Measurement range

| | | |
|---|---|---|
| TDS | - | 0 to 2,500 ppm |
| or conductivity | - | 0 to 3,000 μs/cm |

Setting

- controller - 220 V/50 Hz
- conductivity sensor
- stop valves
- sample cooler
- check valve

| | | |
|---|---|---|
| Condensate temperature | - | up to 150°C |
| Condensate pressure | - | up to 86 psig (up to 6 barg) |

***Model*** ***CCD*** from Spirax Sarco, or an equivalent

Approximate cost **US $2,940**

***Spirax Sarco, Inc***
***P O BOX 119 Allentown, PA 18105, USA***
Fax (610) 433-1346

or

***Armstrong International, Inc***
816 Maple Street, P O 408, Three Rivers
Michigan 49093, USA
Fax (616) 278-6555

**ECO - 05**

**Steam Trap Assembly - 1 assembly**

***Destination*** removal of condensate from the steam and water tube heat exchanger

1 Float steam trap with an internal thermostatic air vent - 1 unit

- inlet steam pressure (operation pressure) - 43 psig (3 barg)
- return line pressure - 14 psig (1 barg)
- enter condensate load - 1,320 lb/h (600 kg/h)
- safety factor - 3
- type of connection - PN16 Flange
- flow direction - horizontal
- material - iron, steel

2 Strainer - 1 unit

- Diameter - Due to the steam trap diameter
- Type of connection - PN16 Flange
- Screen - stainless steel, 0 8 mm perforation
- Flow direction - horizontal
- Material - iron, steel

3 Plate check valve - 1 unit

- Diameter - Due to the steam trap diameter
- Type of connection - PN16 Flange
- Material - steel

4 Spare Parts

- Complete set of gaskets for the steam trap and strainer
- Strainer screen, 0 8 perforation

5 Stop valve - 2 units

- Diameter - Due to the diameter of the steam trap
- Material - iron
- Sealing - bellows type

***Models*** from ***Spirax Sarco***

- DN40 FT43 - 4 5TV Float Trap, flanged BS4504 PN16 with a thermostatic air vent , or an equivalent
- DN40 Fig 33 Strainer, flanged BS5404 PN16, or an equivalent
- DN40 DCV2 Wafer Check Valve for fitting between BS4504 PN16 flanged, or an equivalent

***Model*** DN40 A2-type bellows sealed stop valve, flanged BS4504 PN16, or an equivalent

Approximate cost of the assembly **US $1,940**

***Spirax Sarco, Inc***
P O BOX 119 Allentown, PA 18105, USA
Fax (610) 433-1346

or

*Armstrong International, Inc*
816 Maple Street, P O 408, Three Rivers, Michigan 49093, USA
Fax (616) 278-6555

or

*Institute of Technical Physics of Ukraine*
2-A Zhiliabov, Kyiv
252057, Ukraine

or

Joint Stock Venture *Krolivets Fitting Plant*
25 Franko Street, Krolivets Town
Sumy Region, 245060, Ukraine
Fax (05453) 9-71-04, 9-58-92

or

Joint Stock Venture *Slavhorod Fitting Plant*
Slavhorod Town,
Dnepropetrovsk Region, Sinelnikovo District
323130, Ukraine

**ECO - 06**

**Automatical steam consumption metering system - 1 unit**

***Destination*** automatical commercial and technical metering and keeping records of consumption of the overheated steam, printing out the information through the RS 232 interphase, monitoring the current parameters, alarming when the parameters are above the set values, restoring the data in case of dispowering for the period not longer than 10 days, etc

Commercial metering the steam flow in one spot (250°C, 6 barg, D = 428 mm, G = 40 t/h)
Technical metering the steam flow in five flow (250°C, 3/6 barg, D = 102 to 219 mm, G = 5 to 20 t/h)
Commercial metering the condensate flow in one spot (90°C, 3 barg, 159 mm, 30 $m^3$/h)
Basic error ± 1 5 %
AC power supply 220 V + (10 to 15 %), 50 Hz
Ambient temperature +5 to +40°C
*DERZHSTANDART of Ukraine* Certificate
Turnkey order fulfilment manufacture, delivery, installation, metrological qualification, maintenance

Approximate cost of the system **US $30,800**


Research and Production Association ***"Enerhiya +"***
37 Peremoga Prospekt, Building 22
Kyiv, 252056, Ukraine
Fax (044) 241-70-38

or

*Enerhozberezhennia* Company
3/26 Ternopilska Street
Lviv, 290034, Ukraine
Fax (0322) 72-55-91

or

ITK *Automatika*
Post Box #7, Kyiv
254053, Ukraine
Fax (044) 211-82-44

**ECO - 07**

**Portable Thermometer for Non-Contact Temperature Measurement** - **1 unit**

***Destination*** measuring the external temperature of the heat emitting equipment

| | |
|---|---|
| Measurement range | 0 to 1,000 °C |
| Accuracy | ± 0 5 % of the full scale |
| Resolution | 1°C |
| Power supply | A battery |
| Option | 220-V rechargeable battery pack |
| Warranty | 2 to 3 years |

***Model*** ST6LS from ***Davis Instruments,*** or an equivalent

Approximate cost **US $499**

*Davis Instruments*
4701 Mount Hope Drive
Daltimore, MD 212215, USA
Fax (410) 358-0252

or

*Wahl Instruments, Inc*
5750 Hanuum Ave , Culver City
CA 90231, USA
Fax (310) 670-2840

or

*"Termoprylad"*
3 Naykova Street
Lviv, 290053, Ukraine
Fax (0322) 63-13-61

**ECO - 08**

**Portable Ultrasound Leak Detector - 3 units**

***Destination*** detection of the natural and compressed air leaks in flange connectors, fittings, processing equipment

Power source A storage battery
220 V / 50 Hz rechargeable battery pack

***Model*** EPD-500S kit from *EPD*, or an equivalent

Approximate cost of the order - US $4,500

*EPD*
14 Hayes Street, Elmford
New York 10523, USA
Fax (914) 347-2181

or

*Superior Signal Company, Inc*
PO Box 96 Spotswood, NY08884, USA
Tel (908) 251-0800
Fax (908) 251-9442

or

*Davis Instruments*
4701 Mount Hope Drive
Daltimore, MD 21215, USA
Fax (410) 358-0252

**ECO - 09**

**Clamp-on Digital Power Datalogger - 1 unit**

***Destination*** metering the electric power parameters of the electric motors

Measurement capacity

- true power - up to 1,000 kW
- apparent power - up to 1,000 KVA
- power factor - 0 3 to 1 0
- peak current (DC, AC) - 1,000 A
- peak voltage -
  - AC (40 to 400 Hz) - 750 V
  - DC - 1,000 V

Option - 3-phase adapter

***Model*** *382060* from ***Davis Instruments,*** or an equivalent

Approximate cost **US $680**

*Davis Instruments*
4701 Mount Hope Drive
Daltimore, MD 21215, USA
Fax (410) 358-0252

or

*TIF Instruments, Inc*
9101 N W 7th Avenue
Miami, Florida 33150, USA

**ECO - 10**

**Automatical Turbine Compressor Controlling System - 1 system**

***Destination*** automatical controlling the operation modes of the K-250-61-2 turbine compressor

Turbine specifications

- production capacity - 250 $m^3$/min
- *CTM-1500* electric motor
- outlet air pressure - 9 barg

***Model*** ***UKAS-AM-1,*** or an equivalent

Approximate cost of the system **US $49,820**

Open Joint-Stock Company *Priskominfo-Yug*
P O BOX 76, Mykolayiv,
216081, Ukraine
Tel (0512) 32-70-56
Tel /Fax (0512) 21-71-53

or

Open Joint Stock Company *Orhrnrghoavromatyka*
19 Druzhba Narodiv, Kyiv
Ukraine
Tel (044) 269-5673

**ECO - 11**

**Automatizing the metering and keeping the data concerning the electric power consumption**

**- 1 system**

***Destination*** automatical commercial and technical control of the electric power consumption, printing out through the RS 232 interface, checking the current parameters, alarming the parameters rising above the set values, restoring the data in case of dispowering for the period longer than 10 days, etc Operation with power meters - 3-phase induction ones provided with pulse forming circuits, or electronic ones having a pulse output Addressing the collection and storing information block from a PC for the data in regard of the electric power consumption by each user during the current and the previous days Calculation, systematization and storing the data concerning the electric power consumption (the true and apparent ones) during a day, a month, quarter, and the cost of the electric power consumed by each user, as well as that concerning the total electric power consumption Keeping separately data concerning the cost of the electric power consumed during a day and a month by each tariff zone (the night, semi-peak and peak ones), the limits of the tariff zones shall be easily changed Plotting the daily electric power consumption due to each user as well as the total consumption, viewing the diagrams and tables Viewing the data in relation to the current electric power consumption due to each user The system time synchronization

Commercial metering the electric power flow (the true and apparent power) in nine points
Technical metering the electric power flow (the true and apparent power) in 35 points

Types of communication telephone (switched, fixed), radio communication, HF communication, commercial successive interphases
Basic error ± 1 5 %
AC power supply 200 V + (10 to 15%), 50 Hz
Ambient temperature +5 to +40°C
*Derzhstandart of Ukraine* Certificate

Turn-key order fulfillment manufacture, delivery, installation, metrological qualification, maintenance

Approximate cost of the system **US $30,912**


Research and Production Association *"Enerhiya +"*
37 Peremoga Prospekt, Building 22
Kyiv, 252056, Ukraine
Fax (044) 241-70-38

or

*Enerhozberezhennia* Company
3/26 Ternopilska Street
Lviv, 290034, Ukraine
Fax (0322) 72-55-91

or

ITK *Automatika*
Post Box #7, Kyiv
254053, Ukraine

Fax (044) 211-82-44
or

*NIKI ELVIT LPI*
5 Kn Roman, Lviv
290005, Ukraine
Tel (0322) 72-88-35
Fax (0322) 72-88-47

**ECO - 12**

**Replacement of the External Lighting Lamps - 245 units**

***Destination*** provision of the common external lighting of the plant territory by DNaT-100 high-pressure sodium lamps with ElPRA-100 starting-up equipment

| | | |
|---|---|---|
| Operation current | - | 1 2 A |
| Nominal light flux | - | 9,000 Lm |
| Power supply voltage | - | 190 to 242 V |

Approximate cost of the order - **US $ 7,350**

Open Joint Stock Company *Polrava Gaseous-Discharge Lamps*
3 Zavodska, Poltava, Ukraine
Tel (0532) 66-09-01
Tel /Fax (0532) 66-49-90

or

*Interface* Firm
39 Chekhov, Vinnytsia, Ukraine
Tel (0432) 35-20-14
Fax (0432) 35-11-48

or

*Philips Lighting Co*
200 Franklin Square Drive
Somerset, NJ 08875
(908) 563-3000
1-800-631-1259
Fax (908) 563-3114

**ECO -13**

## Automatized system for compressed air metering

***Destination*** automatized technical metering and keeping data concerning the compressed air consumption, printing out the information through the RS 232 interface, checking the current parameters, alarming the parameters rising above the set values, restoring the data in case of dispowering not longer than for 10 days, etc

Technical metering the compressed air flow in 6 points (dried air 6 to 9 barg, D = 102 to 219 mm, 100 to 200 $m^3/h$)
Basic error ± 1 5%
AC Power supply 200 V + (10 to 15%), 50 Hz
Ambient temperature +5 to +40$^0$C
*DERZHSTANDART of Ukraine* Certificate
Turnkey order fulfillment manufacture, delivery, installation, metrological qualification, maintenance

Approximate cost - **US $27,500**

Research and Production Association *"Enerhiya +"*
37 Peremoga Prospekt, Building 22
Kyiv, 252056, Ukraine
Fax (044) 241-70-38

or

*Enerhozberezhennia* Company
3/26 Ternopilska Street
Lviv, 290034, Ukraine
Fax (0322) 72-55-91

or

ITK *Automatika*
Post Box #7, Kyiv
254053, Ukraine
Fax (044) 211-82-44

**ECO - 14**

## Steam Trap Assemblies

***Destination*** removal condensate from the steam ducts and heat exchangers

1 Float steam traps with internal thermostatic air vent

| | | | |
|---|---|---|---|
| Inlet steam pressure | | - | 43 psig (3 barg) |
| Return line pressure | | - | 22 psig (1 5 barg) |
| Type of connection | | - | PN16 flanged |
| Flow direction | | - | horizontal |
| Material | | - | iron |
| Diameter | DN50 | - | 5 units |
| | DN40 | - | 5 units |
| | DN25 | - | 35 units |

***Model*** *FT43-10 TV flanged BS4504 PN16* from *Spirax Sarco,* or similar ones

2 Strainers

| | | | |
|---|---|---|---|
| Type of production | | - | PN16 |
| Screen | | - | stainless steel, 0 8 perforation |
| Flow direction | | - | horizontal |
| Material | | - | iron, steel |
| Diameter | DN50 | - | 5 units |
| | DN40 | - | 5 units |
| | DN25 | - | 35 units |

*Model* *Fig 33 Strainer, flanged BS4504 PN16* from *Spirax Sarco,* or similar ones

3 Plate check valves

| | | | |
|---|---|---|---|
| Type of connection | | - | interflange |
| Material | | - | steel |
| Diameter | DN50 | - | 5 units |
| | DN40 | - | 5 units |
| | DN25 | - | 35 units |

***Model*** *DCV2 Wafer Check Valve* for fitting between BS4504 PN16 flanged from *Spirax Sarco,* or similar ones

4 Thermostatic steam traps, flanged with an internal strainer

| | | | |
|---|---|---|---|
| Inlet steam pressure | | - | 43 psig (3 barg) |
| Return line pressure | | - | 22 psig (1 5 barg) |
| Diameter | DN20 | - | 20 units |

*Model* *DN20 BPT 21Y, flanged BS4504 PN16* from *Spirax Sarco,* or similar ones

5 Thermodynamic steam traps, flanged, with an internal strainer

| | | |
|---|---|---|
| Inlet steam pressure | - | 70 psig (5 barg) |
| Return line pressure | - | 22 psig (1 5 barg) |
| Diameter DN20 | - | 20 units |

***Model*** *DN20 TD32F, flanged BS4504 PN16* from *Spirax Sarco,* or similar ones

6 Stop valves, of steel, flanged, bellows sealed

| | | | |
|---|---|---|---|
| Diameter | DN50 | - | 5 units |
| | DN40 | - | 5 units |
| | DN25 | - | 35 units |
| | DN20 | - | 40 units |

***Model*** *A3 bellows sealed stop valve flanged BS4504 PN16* from *Spirax Sarco,* or similar ones

Approximate cost of the order - **US $65,675**

*Spirax Sarco, Inc*
P/O/BOX 119 Allentown
PA 128105, USA
Fax (610) 433-1346

or

*Armstrong International, Inc*
816 Maple Street, P O 408, Three Rivers
Michigan 49093, USA
Fax (616) 278-6555

**ECO -15**

## Infra-Red Gas Fired Heating Systems

***Destination*** heating the production buildings/

Main Specifications

| | | |
|---|---|---|
| Fuel | - | natural gas |
| Heat capacity of a plant | - | 1 6 to 15 kW |
| Blowing gas pressure | - | 100 to 200 kgf/m$^2$ |
| Types of heaters | - | tube or ceramic heaters |

*Space - Ray Division*
*Gas Fired Product, Inc*
P O Box 36485
Charlotte, NC 28236, USA
Tel (704) 372-3485

or

*Fostoria Industries, Inc*
1200 N Main Street
General Products Division
Fostoria, OH 44830 - 1911, USA
Fax (419) 435-0842

or

*Institute of Gas within National Academy of Sciences of Ukraine*
39 Dehtiarevska, Kyiv
252113, Ukraine
Fax (044) 446-88-30

or

*Robitnia* Open Joint Stock Company
28 Yefremov, Lviv
290013, Ukraine
Tel /Fax (0322) 35-10-68

# APPENDIX C DATA FROM MANUFACTURERS

The Spirax Sarco CCD condensate contamination detection system monitors the conductivity of condensate being returned to the boiler. Contaminated condensate is diverted to drain thereby protecting the boiler.

## Benefits of returning condensate

Steam is an extremely convenient way of transmitting energy and is used for many industrial processes. When it has given up its heat to the process the hot condensate should be returned to the boiler house in order to:

- Save energy by using the remaining sensible heat content of the condensate
- Save the cost of water
- Save on water treatment chemicals since the condensate should be virtually pure water

## Contamination - the dangers

Whilst it is desirable to return the maximum amount of condensate to the boiler it is essential to ensure that it is clean. Even low levels of contamination can cause foaming, scaling or corrosion. If carry over of boiler water with the steam occurs then the product can become contaminated resulting in expensive lost production.

## Condensate monitoring

By continuously monitoring the condensate being returned to the boiler it is possible to protect the boiler, ensure product quality and maximise energy and water savings.

This can be achieved using the Spirax Sarco CCD system.

## User benefits

- ✓ Avoids boiler damage and product contamination
- ✓ Temperature compensation sensor gives accurate results regardless of condensate temperature
- ✓ Minimises energy wastage
- ✓ Conserves expensive treated water
- ✓ Cost [illegible]

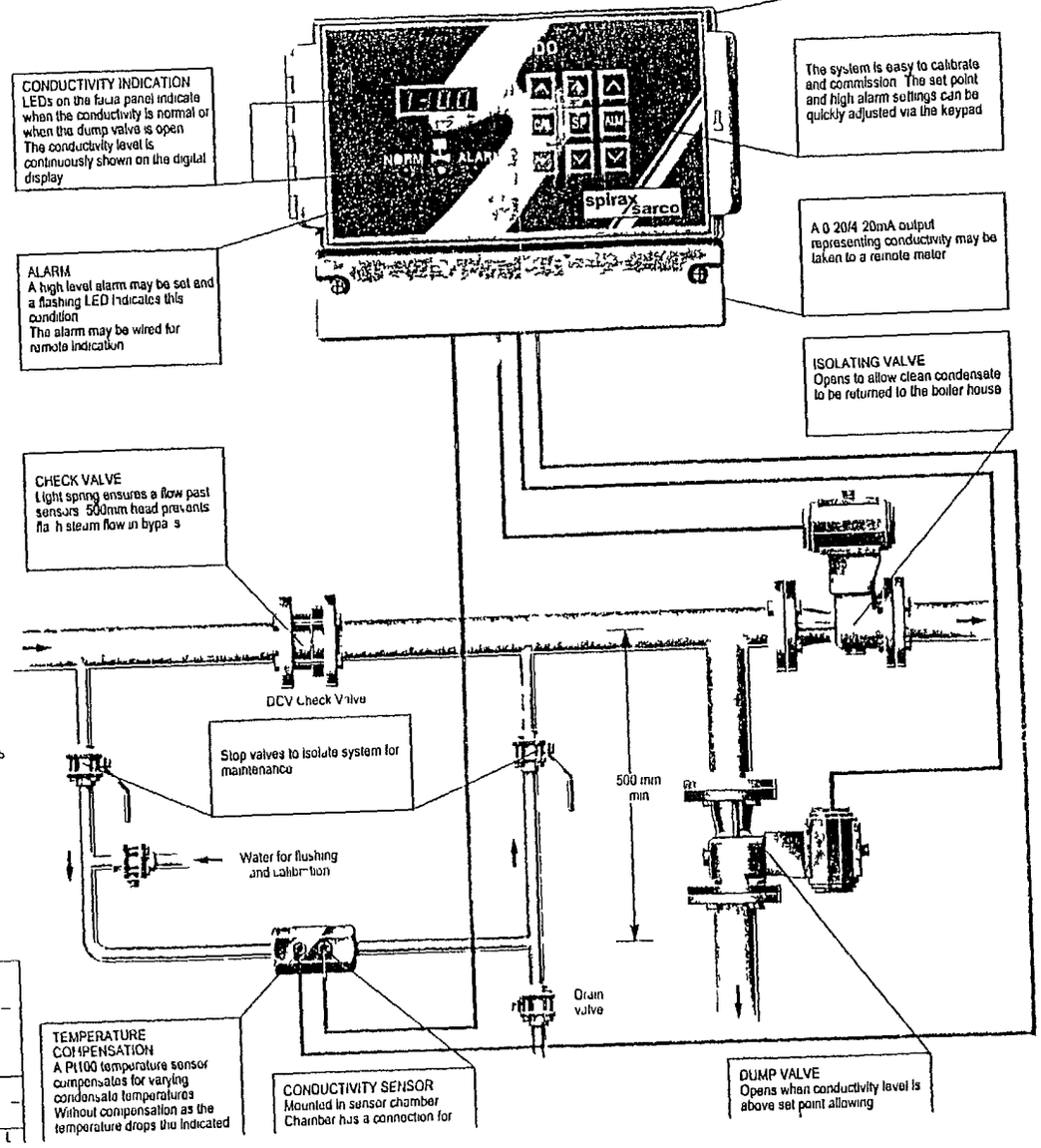


## How the CCD system works

The Spirax Sarco condensate contamination detection system monitors and displays the conductivity of the condensate. It will automatically open a dump valve if the conductivity level should rise above a pre selected set point allowing the condensate to flow to drain preferably via a suitable vessel.

When the conductivity drops the dump valve is closed and condensate is allowed to return to the boiler system thus minimising heat and water wastage as well as avoiding the possibility of contaminating the feedwater.

**Note** Though the system can detect very small changes in conductivity it will not detect the presence of contaminants that do not affect conductivity such as oil fats and sugars.

If in any doubt carry out a test on known clean condensate and known contaminated condensate comparing conductivity.

The Spirax Sarco MS1 portable conductivity meter is ideal for this purpose.

## System components

The system comprises a Spirax Sarco S20 sensor chamber with CP10 conductivity sensor and Pt100 temperature sensor mounted in a condensate line bypass.

The sensors are connected to a low range BC3000 controller that constantly monitors and displays the conductivity level.

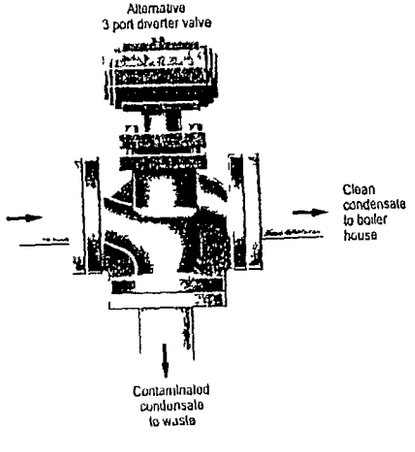


BEST AVAILABLE COPY

BEST AVAILABLE COPY

# MS1 Conductivity meter, the essential instrument for every boilerhouse

## The importance of TDS testing

Steam boilers can only produce good quality steam of an acceptable dryness fraction if the level of total dissolved solids (TDS) is kept below certain limits to avoid foaming

Automatic blowdown systems are often fitted to control TDS levels but regulations in most countries also recommend that regular testing of boiler water and feed water TDS is carried out and records kept

Regular conductivity testing of condensate return can also help to identify operational problems such as boiler water carry over or contamination of condensate by raw water or process chemicals

For all these purposes a conductivity meter is essential

## The MS1 meter

The Spirax Sarco MS1 is a compact battery powered conductivity meter designed for use in the boilerhouse and is particularly suitable for measuring the conductivity of boiler water feed water or condensate samples in order to estimate TDS levels

The instrument is fitted with a permanently wired carbon electrode sensor with integral temperature sensor and can be used for sample temperatures up to 45 C though it is more usual to cool samples to around 25 C before testing using a simple cooler

## Conductivity probe testing

A unique feature of the MS1 is the facility to check the condition of conductivity probes while they are still installed in the boiler

A plug in extension lead is provided which enables the probe ac resistance to be measured a task that cannot be carried out with an ohm meter

From the readings obtained it is possible to diagnose malfunctions before they become problems

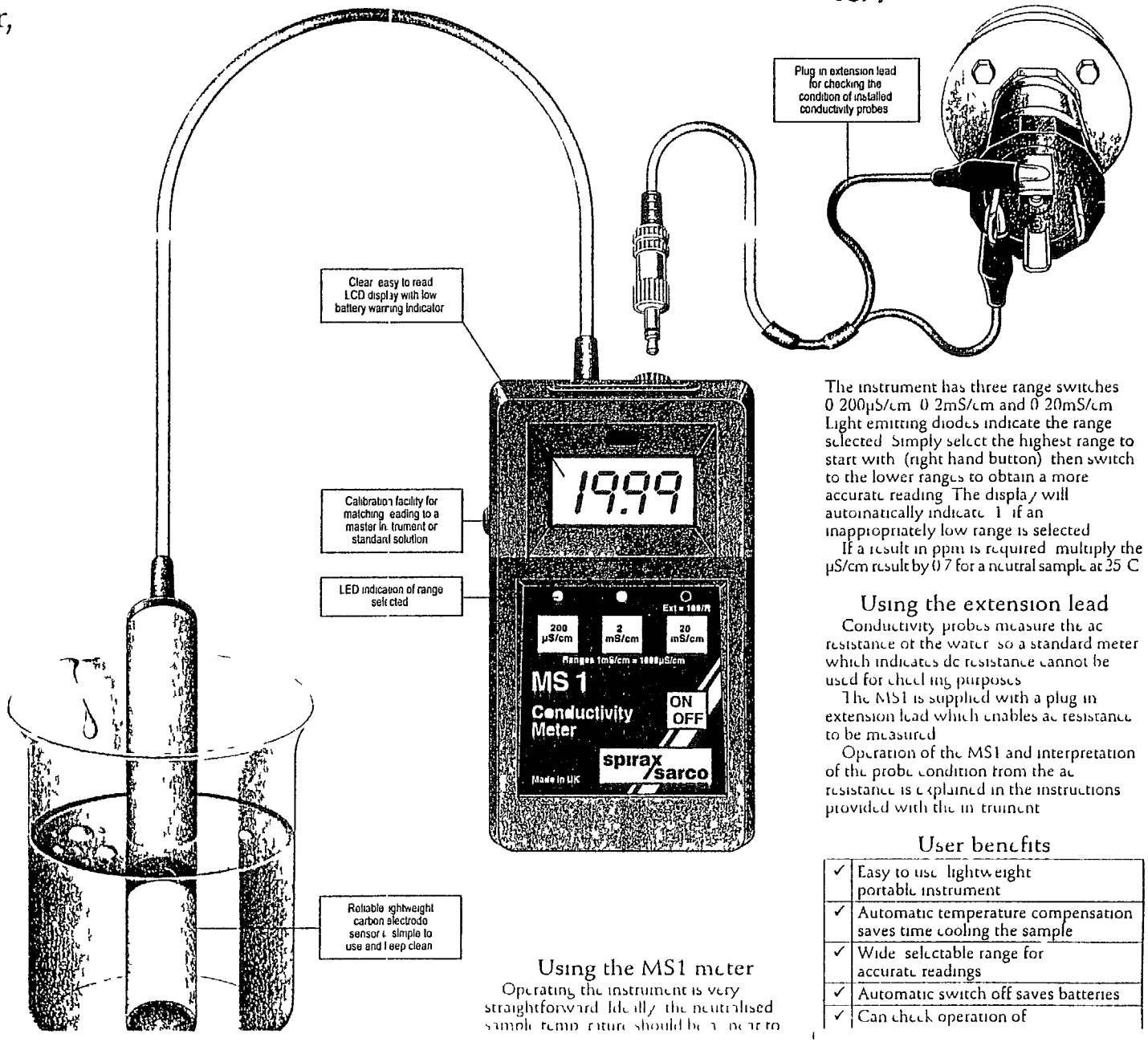


## Using the MS1 meter

Operating the instrument is very straightforward Ideally the neutralised sample temperature should be near to

The instrument has three range switches 0 200µS/cm 0 2mS/cm and 0 20mS/cm Light emitting diodes indicate the range selected Simply select the highest range to start with (right hand button) then switch to the lower ranges to obtain a more accurate reading The display will automatically indicate 1 if an inappropriately low range is selected

If a result in ppm is required multiply the µS/cm result by 0 7 for a neutral sample at 25 C

## Using the extension lead

Conductivity probes measure the ac resistance of the water so a standard meter which indicates dc resistance cannot be used for checking purposes

The MS1 is supplied with a plug in extension lead which enables ac resistance to be measured

Operation of the MS1 and interpretation of the probe condition from the ac resistance is explained in the instructions provided with the instrument

## User benefits

| | |
|---|---|
| ✓ | Easy to use lightweight portable instrument |
| ✓ | Automatic temperature compensation saves time cooling the sample |
| ✓ | Wide selectable range for accurate readings |
| ✓ | Automatic switch off saves batteries |
| ✓ | Can check operation of |

Certificate No FM163

ISO 9001

# Поплавковый конденсатоотводчик FT 43 DN 15-50

## Описание

FT43 чугунный поплавковый конденсатоотводчик со встроенным автоматическим воздушником Может быть как с горизонтальными фланцевыми соединениями так и с вертикальными FT43V

В конденсатоотводчике с горизонтальными соединениями возможна дополнительная установка ручного игольчатого клапана работающего как паровыпускной затвор (ПВЗ) FT43 C При необходимости в крышке можно сделать отверстие с соединением ³/₈" BSP или NPT для установки крана осушки

## Ограничения применения (ISO 6552)

Максимальные условия конструкции корпуса PN 16
PMA — Макс допустимое давление 16 ати
TMA — Макс допустимая температура 220 C
Холодное гидравлическое испытание 24 ати

## Рабочий диапазон

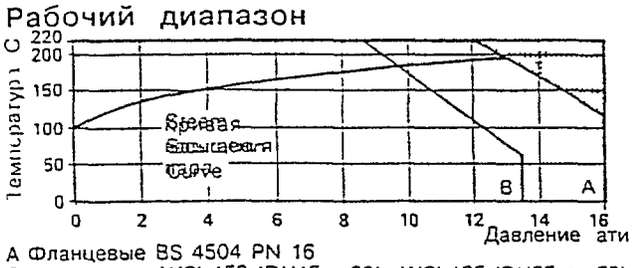


A Фланцевые BS 4504 PN 16
B Фланцевые ANSI 150 (DN15 и 20) ANSI 125 (DN25 до 50)

Изделие не используется при данных параметрах

Δ PMX Макс дифференциальное давление

| DN | FT43 4 5 | FT43 10 | FT43 14 |
|---|---|---|---|
| 15 до 50 | 4 5 атм | 10 атм | 14 атм |

Конденсатоотводчики 40/50DN имеют ограничение PMO равное Δ PMX

## Размеры и соединения

DN 15 20 25 40 и 50 стандартные фланцы BS 4504 и PN 16
При необходимости возможна поставка с фланцами ANSI 150 с отверстиями

## Материалы

| № | Деталь | Материал | Спецификация |
|---|---|---|---|
| 1 | Корпус | Чугун | DIN 1691 GG 25 |
| 2 | Болты крышки DN 15 25 | Сталь | BS 3692 Gr 8 8 |
| | Штифт крышки | Сталь | BS 3692 Gr 8 8 |
| | Гайки крышки | | |
| 3 | Прокладка крышки | Армированый листовой графит | |
| 4 | Крышка | Чугун | DIN 1691 GG 25 |
| 5 | Седло клапана DN 15 20 25 | Нерж сталь | BS 970 431 S29 |
| | (Для вертикальных конденсатоотводчиков DN 15 и 20) | | |
| | Узел главного клапана с антикоррозийным дефлектором DN 40 50 | Нерж сталь | BS 3146 Part 2 Anc 2 |
| 6 | Прокладка седла клапана DN 15 20 25 | Нерж сталь | BS 1449 304 S11 |
| | Прокладка узла главного клапана DN 40 50 | Армированный листовой графит | |
| 7 | Узел шарнирной стойки Болты DN 15 20 25 | Нерж сталь | BS 4183 18/8 |
| | Болты узла главного клапана DN 40 | | BS 970 304 S16 |
| | Штифты и гайки DN 50 | | BS 6105 A4 80 |
| 8 | Шаровой поплавок и рычаг | Нерж сталь | BS 1449 304 S16 |
| 9 | Воздушник | Нерж сталь | |
| 11 | Узел ПВЗ | Нерж сталь | BS 970 303 S21 |
| 12 | Прокладка ПВЗ | Мягкая сталь | BS 1449 CS4 |
| 13 | Уплотнение ПВЗ | Графит | |
| 14 | Опорная рамка | Нерж сталь | BS 1449 304 S16 |
| 15 | Шарнирная стойка | Нерж сталь | BS 1449 304 S16 |
| 16 | Шарнир | Нерж сталь | |

FT 43
DN 15 и 20

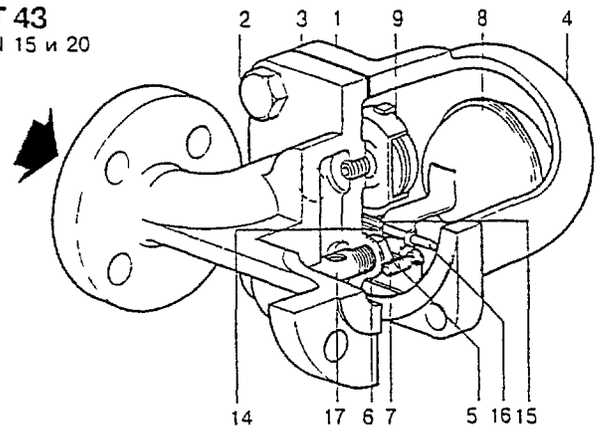


FT 43
DN 25

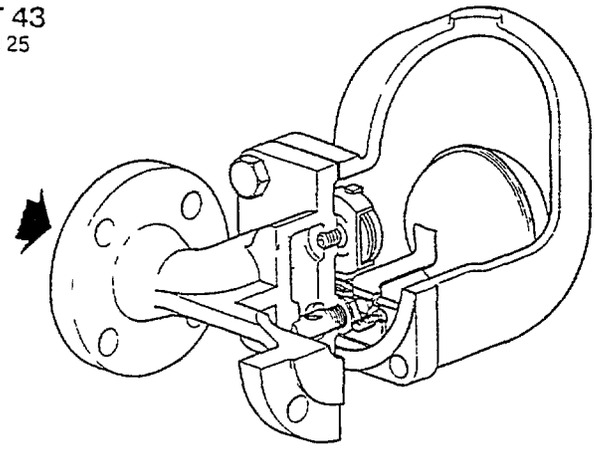

FT 43
DN 40 и 50

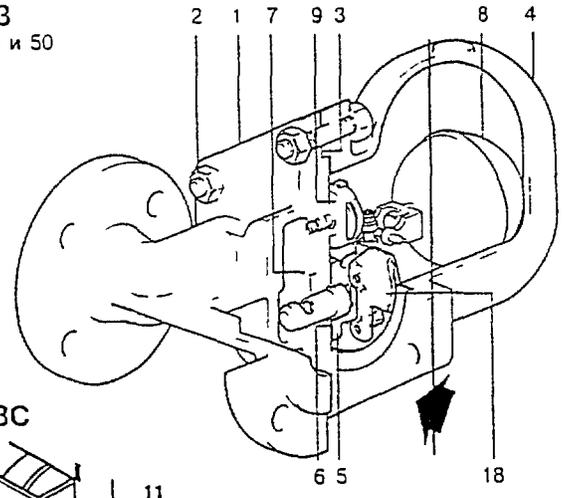


FT43C

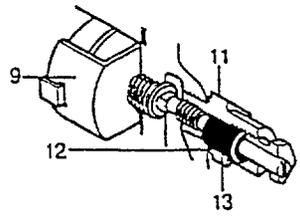


| | | | |
|---|---|---|---|
| 17 | Антикоррозийный дефлектор (только DN15 20 и 25 (гориз ) и DN15 и 20 (верт ) | Нерж сталь | BS 970 431 S29 |
| 18 | Входной отражатель (DN40 и 50) | Нерж сталь | BS 1449 304 S15 |

*Местные правила эксплуатации могут ограничивать использование этого изделия значениями параметров ниже указанных*
*Для совершенствования данного изделия мы оставляем за собой право изменять его технические характеристики*

© Copyright 1995

36
31
86

## Обозначение

DN 20 FT 43 14 Конденсатоотводчик Спайракс Сарко Фланцевые соединения BS 4504 PN 16 чугунный корпус и крышка термостатический воздушник

## Размеры (приблизительные), мм

| DN | A | B | C | D | E | F | Масса |
|---|---|---|---|---|---|---|---|
| 15 | 150 | 54 | 54 | 188 | 110 | 155 | 5 5 кг |
| 20 | 150 | 54 | 54 | 195 | 110 | 165 | 5 5 кг |
| 25 | 160 | 110 | [illegible] | 245 | 160 | 215 | 8 3 кг |
| 40 | [illegible] | 25 | 110 | 330 | 200 | 200 | 21 5 кг |
| 50 | 220 | 140 | 125 | 340 | 200 | 225 | 30 5 кг |

Стыковые размеры соответствуют ISO 6554

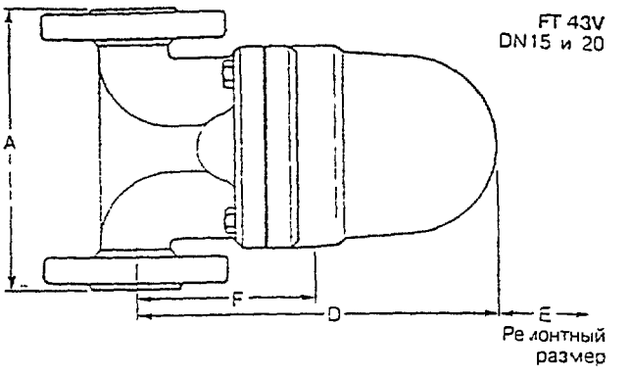


## Установка

Конденсатоотводчик должен быть расположен таким образом чтобы направление потока совпадало с направлением стрелки на корпусе конденсатоотводчика а рычаг поплавка находился в горизонтальном площади чтобы поплавок вертикально поднимался и опускался

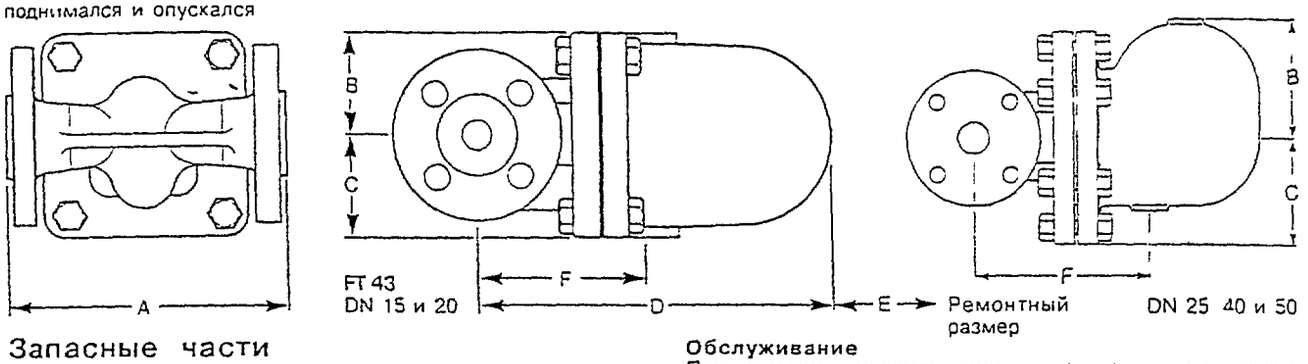


## Запасные части

Поставляемые запасные части изображены сплошными линиями Детали нарисованные пунктиром не поставляются как запасные части

| ЗАПАСНЫЕ ЧАСТИ | |
|---|---|
| Узел главного клапана с поплавком (DN 15 20 25 горизонтальные конденсатоотводчики) | 5 6 7 0 4 15 |
| Узел главного клапана с антикоррозийным дефлектором * (DN 40 50) (указать горизонтальный или вертикальный) | 5 6 7 |
| Узел главного клапана с поплавком и дефлектором (только вертикальные DN 15 и 20) | 5 6 7 |
| Шаровой поплавок и рычаг (DN 40 и 50) | 8 |
| Воздушник | 9 |
| Узел паровыпускной затвор воздушник | 9 11 12 |
| Полный комплект прокладок (по 3 шт ) | 6 12 13 |

В горизонтальных конденсатоотводчиках DN 15 20 и 25 антикоррозионный дефлектор вмонтирован в корпус при изготовлении и как запасная часть не поставляется

В вертикальных конденсатоотводчиках антикоррозионный дефлектор не устанавливается

### Обозначение в заказе

При заказе запасных частей используйте описание из таблицы Запасные части и не забывайте указать размер тип конденсатоотводчика а также горизонтальный или вертикальный

Пример 1 — Воздушник для DN 20 FT 43 горизонтального конденсатоотводчика Спайракс Сарко

### Обслуживание

При надежном изолировании конденсатоотводчик можно ремонтировать в трубопроводе При повторной сборке убедитесь что все контактные поверхности чистые и в крышку вставлен соединительный шип

### Установка узла главного клапана

На конденсатоотводчиках DN 15 20 25 выкрутить опору шарнирную стойку и седло клапана Убедитесь что поверхность седло чистая и сухая Посадите седло клапана в корпус (прокладочную пасту не применять) Установить опорную рамку и шарнирную стойку на корпусе с помощью винтов но не затягивать Соединить рычаг поплавка с шарнирной стойкой с помощью шпильки и перемещая весь узел сцентровать головку клапана с отверстием седла Затянуть винты На конденсатоотводчиках DN 40 и 50 выкрутить 4 болта или гайки Снять узел основного клапана и заменить его новым Равномерно затянуть винты или гайки

### Установка воздушника

Снимите серьгу пружины капсюль прокладочную пластинку и отвинтите седло Установите новые седло и стойку Соберите в обратном порядке

### Рекомендуемые моменты затяжки соединений

| Деталь | Размер DN | мм | или | Нм |
|---|---|---|---|---|
| 2 | 15 20 25 | 17 | M10 x 30 | 29 33 |
| | 40 | 24 | M12 x 60 | 60 66 |
| | 50 | 24 | M16 x 70 | 80 88 |
| 11 | | 22 | | 40 45 |
| 9 | | 17 | | 50 55 |
| 5 | 15 20 25 | | | 50 55 |
| 7 | 40 | 10 | M6 x 20 | 10 12 |
| | 50 | 13 | M8 x 20 | 20 24 |
| 7 | 15 25 | | M5 x 20 | 2 5 2 8 |

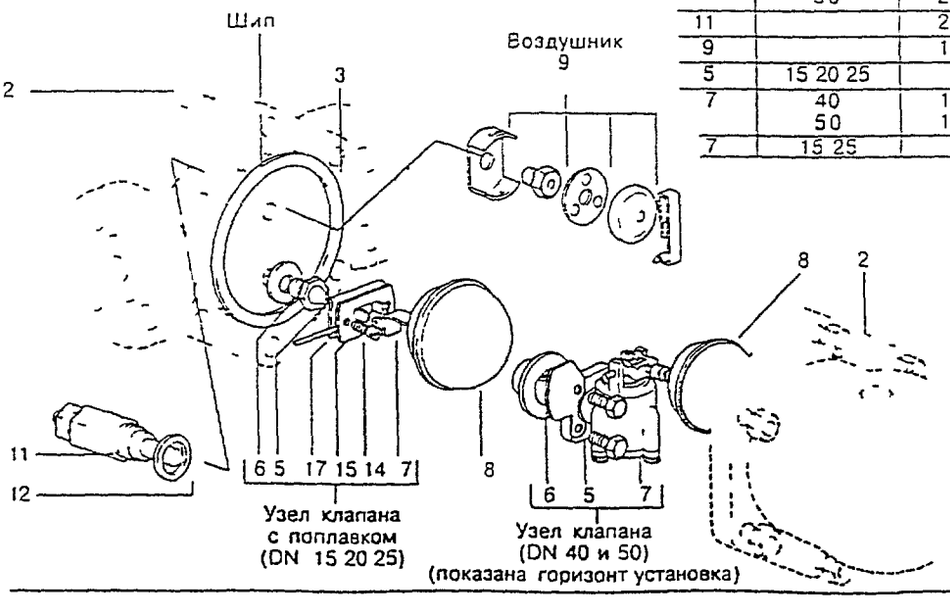

spirax sarco

Certificate No FM163

ISO 9001

# Фильтр-ловушка из чугуна Fig 33

## Описание

Фильтры ловушки Y образные Fig 33 для DN 15 до 80
Стандартные сетки из нержавеющей стали с перфорацией диаметром 0 8 мм
Фильтры ловушки Y образные Fig 33 для DN 100 до 200
Стандартные сетки из нержавеющей стали с отверстиями диаметром 1 6 мм

## Дополнительное оборудование

Кожухи фильтров ловушек

| | | |
|---|---|---|
| Сталь нержавеющая | Диаметр | 1 6 мм (DN 15 до DN 80)<br>3 мм (DN 15 до DN 200) |
| | Количество отверстий 40 100 200 | |
| Монель | Диаметр | 0 8 мм (DN 15 до DN 80)<br>1 6 мм (DN 100 до DN 200)<br>3 мм (DN 15 до DN 200) |
| | Количество отверстий 100 | |

## Ограничение применения

Корпус соответствует нормали PN 16
Максимальная расчетная температура 300 C
Давление холодного гидравлического испытания 24 ати

## Диапазон рабочих параметров

Нерабочая область для данного изделия
A — A Фланц соед BS 4504 PN 16
B — B Фланц соед AS 2129 табл F
C — C Фланц соед ANSI категории 125
(включая DN15 и 20 ANSI категории 150)

## Размеры и соединения

DN 15 20 25 32 40 50 65 80 100 125 150 и 200
Станд фланц соед BS 4504 и DIN PN 16 и 10 AS2129 табл F ANSI 150 (DN 15 и 20) ANSI 125 (DN 25 до 200)

## Материалы

| № | Деталь | Материал | |
|---|---|---|---|
| 1 | Корпус | Чугун | DIN 1691 GG 20 |
| 2 | Крышка | DN15 50 SG чугун<br>DN65 200 чугун | DIN 1693 GGG 40<br>DIN 1691 GG 20 |
| 3 | Прокладка крышки | Графит листовой армированный | |
| 4 | Кожух фильтра ловушки | Сталь нерж | ASTM A240 316L |
| 5 | Шпильки крышки<br>Гайки крышки | Сталь<br>Сталь | BS 4439 Gr 8 8<br>BS 3692 Gr 8 |

DN 15 до 50

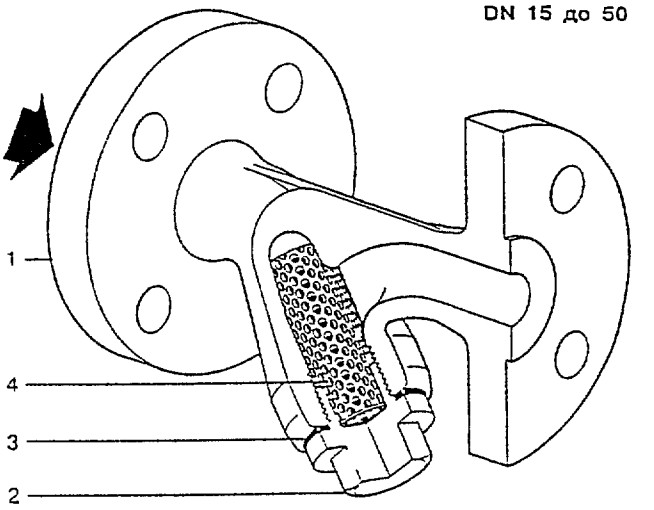


DN 65 до 200

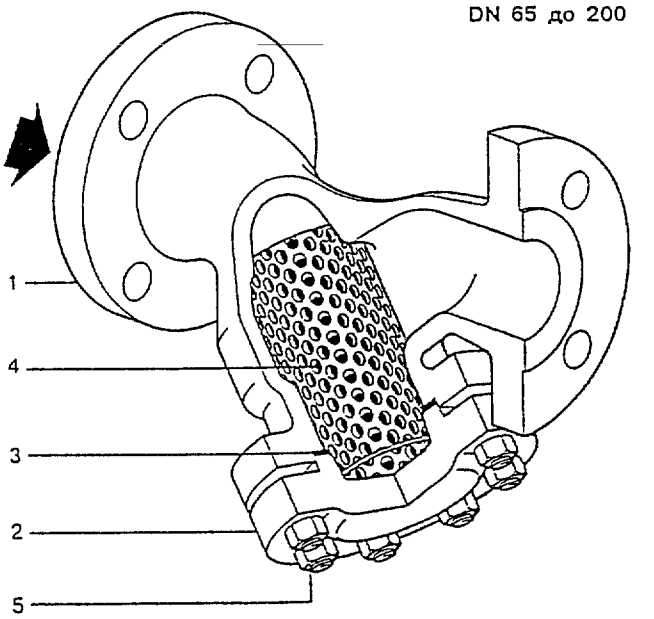


## Значения коэффициента kv

| DN | 15 | 20 | 25 | 32 | 40 | 50 | 65 | 80 | 100 | 125 | 150 | 200 |
|---|---|---|---|---|---|---|---|---|---|---|---|---|
| >100 отверстий | 5 | 8 | 13 | 22 | 29 | 46 | 72 | 103 | 155 | 237 | 340 | 588 |
| 200 отверстий | 4 | 6 | 10 | 17 | 23 | 37 | 58 | 83 | 124 | 186 | 268 | 464 |

Для перевода $C_V$ (Англ ) = $k_V$ x 0 97 $C_V$ (США) = $k_V$ x 1 17

## Обозначение в заказе

Фильтр ловушка Спаиракс Сарко Fig 33 DN25 с фланцевыми соединениями BS 4504 PN16 с кожухом из нержавеющей стали и диаметром отверстий 0 8 мм

Использование данного изделия может быть ограничено если местными правилами эксплуатации установлены параметры ниже указанных.
С целью совершенствования данного изделия мы оставляем за собой право изменять его технические характеристики

© Copyright 1995

## Размеры (ориентировочные) в мм

| DN | PN16 A | AS2129 A | ANSI A | B | C | Площадь сетки | Масса |
|---|---|---|---|---|---|---|---|
| [illegible] | 130 | [illegible] | 130 | 70 | [illegible] | 27см² | 1 8 кг |
| [illegible] | 150 | 47 | 5[illegible] | 80 | 30 | 43см² | 2 7 кг |
| [illegible] | [illegible] | [illegible] | 54 | [illegible] | 150 | 73см² | 3 [illegible] кг |
| [illegible] | [illegible] | [illegible] | [illegible] | [illegible] | 225 | 35[illegible] | [illegible] 0 кг |
| [illegible] | [illegible] | [illegible] | [illegible] | [illegible] | 240 | 6[illegible]см² | [illegible] 2 [illegible] |
| [illegible] | [illegible] | [illegible] | 224 | [illegible] | 300 | [illegible] см² | 0 [illegible] кг |
| [illegible] | [illegible] | [illegible] | 225 | 200 | 335 | 32[illegible]см² | 21 [illegible] кг |
| 3[illegible] | [illegible] | 304 | 304 | 210 | 340 | 361см² | 25 9 кг |
| [illegible] | [illegible] | 350 | 350 | 2[illegible] | 4[illegible] | 54[illegible]см² | 38 5 кг |
| 25 | [illegible] | [illegible] | 400 | 300 | 510 | 843см² | 63 0 кг |
| 50 | [illegible] | 480 | 480 | 345 | 575 | 1117см² | 87 0 кг |
| 200 | [illegible] | [illegible] | 598 | 435 | 730 | 1909см² | 153 0 кг |

ANSI — Размеры A — DN 15 & 20 ANSI 150
DN 25 200 ANSI 125

**Присоединения крана нижней продувки или дренажа**
Для установки крана нижней продувки или дренажа в крышке может быть выполнено отверстие следующих размеров

| Размер фильтра ловушки | Кран нижней продувки | Кран дренажа |
|---|---|---|
| 15 | ¼" | ¼" |
| 20 и 25 | ½" | ½" |
| 32 и 40 | 1" | ¾" |
| 50 | 1¼" | ¾" |
| 65 80 100 и 125 | 1¼" | ¾" |
| 150 125 200 | 2" | ¾" |

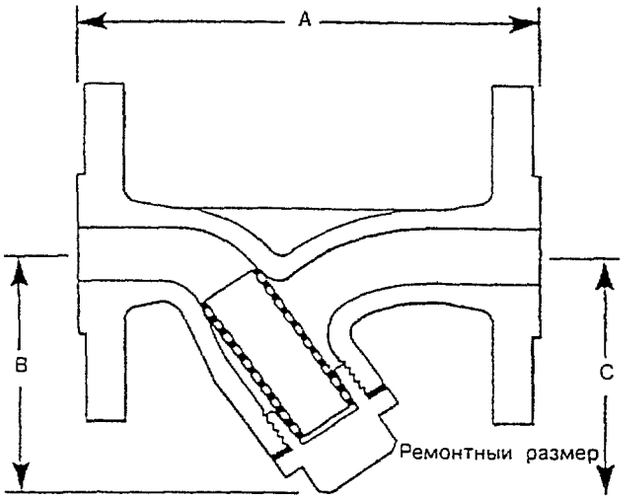


## Монтаж

Фильтр ловушку следует устанавливать в направлении потока указанном на корпусе в вертикальном или горизонтальном трубопроводе

## Запасные части

Поставляемые запчасти показаны сплошными линиями Детали показанные штриховыми линиями в качестве запчастей не поставляются

| ПОСТАВЛЯЕМЫЕ ЗАПЧАСТИ | |
|---|---|
| Сетка фильтра ловушки | 4 |
| Укажите материал размер перфорации количество отверстий и размер фильтра ловушки | |
| Прокладка крышки (3 шт ) | 3 |
| Набор шпилек и гаек крышки | 5 |
| DN 65 to 150 (8 шт ) | |
| DN 200 (12 шт ) | |

## Обозначение в заказе

При заказе всегда используйте наименования приведенные в колонке "Поставляемые запчасти" и указывайте размер и тип фильтра ловушки и необходимых отверстий

Пример 1 Сетка фильтра ловушки нержавеющая сталь с перфорацией 0 8 мм для фильтра ловушки Спайракс Сарко Fig 33 DN 65

DN 15 до 50

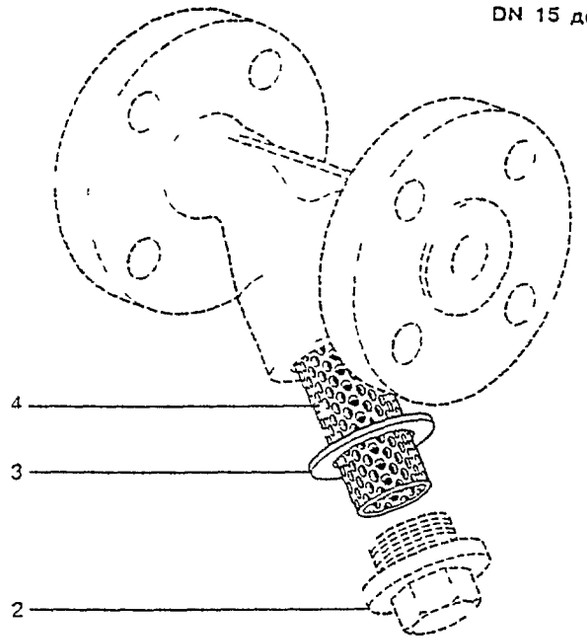


DN 65 до 200

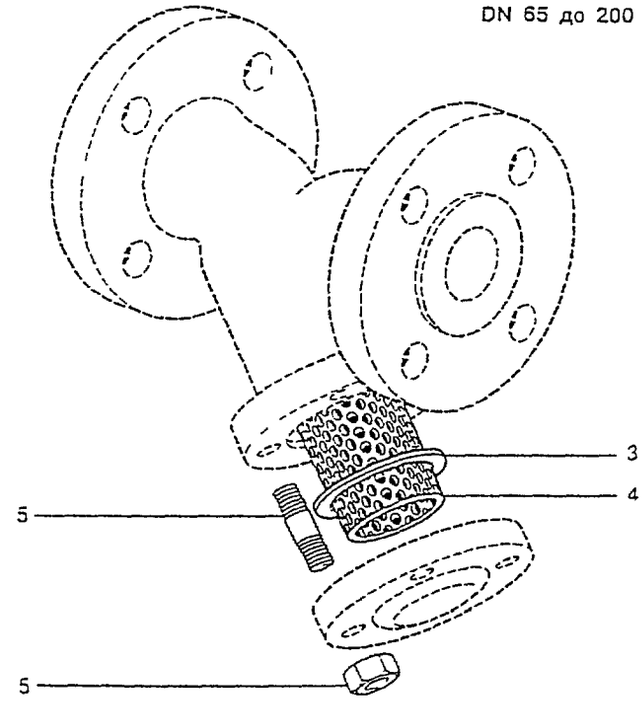


**Рекомендуемые закручивающие усилия**

| Деталь | DN | или мм | | Нм |
|---|---|---|---|---|
| 2 | 15 | 22 | | 50 55 |
| | 20 | 27 | | 60 66 |
| | 25 | 27 | | 100 110 |
| | 32 | 41 | | 150 165 |
| | 40 | 41 | | 170 185 |
| | 50 | 55 | | 190 210 |
| 5 | 65 | 19 | M12 x 40 | 20 24 |
| | 80 | 19 | M12 x 40 | 30 35 |
| | 100 | 24 | M16 x 50 | 70 77 |
| | 125 | 24 | M16 x 50 | 80 88 |
| | 150 | 30 | M20 x 60 | 100 110 |
| | 200 | 30 | M20 x 70 | 90 100 |

spirax sarco

# Дисковые обратные клапаны типа DCV 1, 2, 3

## Описание

Дисковые обратные клапаны типа DCV 1 2 и 3 разработаны для установки между фланцами Они удобны для применения в широком спектре сред в технологических линиях с системах горячей воды пара и конденсата

## Ограничение применения

DCV1

Корпус соответствует максимальному давлению PN16
PMO Максимальное рабочее давление 16 ат
TMO Максимальная рабочая температура 260 C
Максимальное давление холодного гидравлического испытания 24 ати
Минимальная рабочая температура 50 C

| | DCV2 | DCV3 |
|---|---|---|
| Корпус соответствует макс давлению | PN40 | PN40 |
| PMO Максимальное рабочее давление | 40 ати | 40 ати |
| TMO Максимальная рабочая температура | | |
| Со стандартной пружиной или пружиной для сильных нагрузок | 300 C | 300 C |
| Без пружины | 300 C | 400 C |
| Высокотемпературная пружина из никелевого сплава | | 400 C |
| Минимальная рабочая температура | 50 C | 50 C |

## Диапазон рабочих параметров

DCV1

DCV 2 и DCV 3

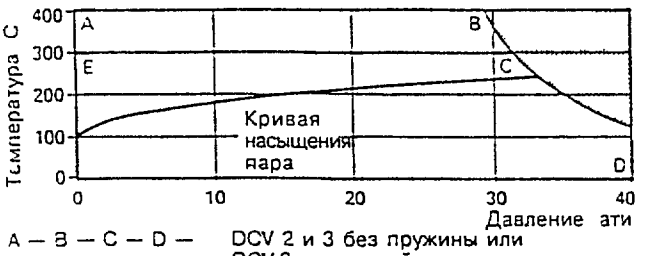


A — B — C — D — DCV 2 и 3 без пружины или DCV 3 с пружиной из никелевого сплава
E — C — D — DCV 2 и 3 со стандартной пружиной

Нерабочая область для данного изделия

## Размеры и соединения

DN 15 20 25 32 40 50 65 80 100
DCV 1 2 и 3 могут быть установлены между E' and H типа BS10 BS4504/DIN PN6 10 16 25 40 JIS 5 10 16 20 фланцевые соединения со следующими исключениями —
DN 40 50 80 и 100 — не устанавливаются между фланц. соединениями JIS 5
DN 65 и 80 — не устанавливаются между фланцевыми соединениями E типа BS10

**Возможный выбор пружин**

Жесткие пружины для схем котловой питательной воды Для размеров до DN 65 в моделях DCV1 и DCV2
Никелевый сплав для температуры для температуры выше 400 C для всех размеров только в моделях DCV3

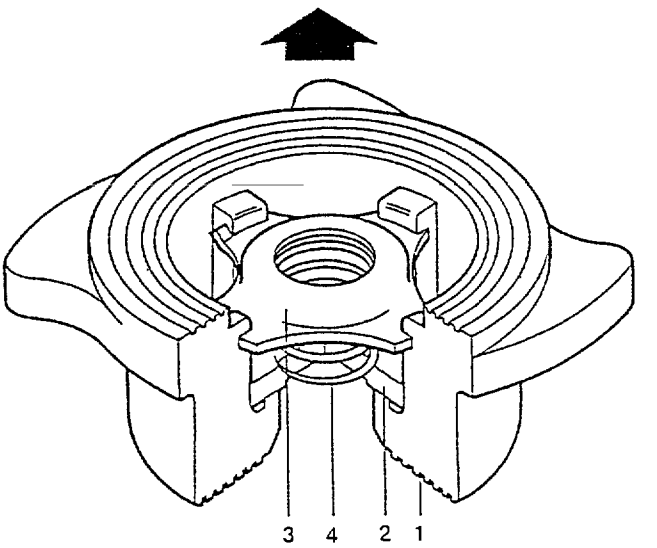


## Возможный выбор мягких уплотнений

Viton (для масел и газов)—температурные ограничения 15°C до + 250°C
EPDM (для воды)—температурные ограничения 50 C до + 150 C

## Материалы

| N | Деталь | | Материал | |
|---|---|---|---|---|
| 1 | Корпус | DCV1 | Бронза | WS 2 1050 |
| | | DCV2 | Ферритная нерж.сталь | WS 1 ~313 |
| | | DCV3 | Аустенитная нерж сталь | WS 1 ~581 |
| 2 | Диск | | Аустенитная нерж сталь | BS 1~49 316 S 11 |
| 3 | Фиксатор пружины | | Аустенитная нерж сталь | BS 14~9 316 S 11 |
| 4 | Стандартная пружина | | Аустенитная нерж сталь | BS 2056 316 S 42 |
| | Пружина для сильных нагрузок | | Аустенитная нерж.сталь | BS 2056 316 S 42 |
| | Высокотемпературная пружина | | Никелевый сплав | Nimonic 90 |

**Открывающее давление, матм**

Стандарт перепад давлений с Нулевым Потоком и пружины из никелевого сплава

| ω | Направление потока | | | | | | | | |
|---|---|---|---|---|---|---|---|---|---|
| DN | 15 | 20 | 25 | 32 | 40 | 50 | 65 | 80 | 100 |
| ω | 25 | 25 | 25 | 27 | 28 | 29 | 30 | 31 | 33 |
| ω | 22 5 | 22 5 | 22 5 | 23 5 | 24 5 | 24 5 | 25 | 25 5 | 26 5 |
| ω | 20 | 20 | 20 | 20 | 20 | 20 | 20 | 20 | 20 |

Там где требуется низкое значение открывающего давления возможна установка клапанов без пружин в вертикальных трубах с направлением потока снизу вверх

Без пружины

| | | | | | | | | | |
|---|---|---|---|---|---|---|---|---|---|
| ω | 2 5 | 2 5 | 2 5 | 3 5 | 4 | 4 5 | 5 | 5 5 | 6 5 |

Жесткие пружины около 700 матм

## Стандарты запирания

Стандартные клапаны соответствуют DIN 3230 часть 3 BN 2 Возможен заказ клапанов соответствующих DIN 3230 часть 3 BO3 Мягкие уплотнения соответствуют DIN 3230 часть 3 BN1 и BO1 и поставляются для различных перепадов давления

## Стандарты

Изделие разработано и производится в соответствии с BS 7438

*Использование данного изделия может быть ограничено если местными правилами эксплуатации установлены параметры ниже указанных*
*С целью совершенствования данного изделия мы оставляем за собой право изменять его технические характеристики*

© Copyright 1994

## Размеры (ориентировочные) в мм

| DN | A | B | C | D | E | F | Масса кг DCV1 | DCV2 и 3 |
|---|---|---|---|---|---|---|---|---|
| 15 | 60 | 43 | 38 | 6 | 29 | 5 | 0 13 | 0.11 |
| 20 | 69 5 | 53 | 45 | 9 | 35 7 | 20 | 0 19 | 0.17 |
| 25 | 80 5 | 55 | 55 | [illegible] | [illegible] | 25 | 0 32 | 0 28 |
| 32 | [illegible] | 75 | 68 | [illegible] | [illegible] | 32 | 0 5 | 0 47 |
| [illegible] | 101 | [illegible] | 9 | [illegible] | [illegible] | [illegible] | [illegible] | 0 64 |
| 50 | 115 | 95 | 93 | 40 | 77 | 0 | 1 2[illegible] | 1.11 |
| 65 | 142 | 115 | 110 | 46 | 97 5 | 65 | 1 87 | 1 64 |
| 80 | 154 | 133 | 128 | 0 | 11 5 | 80 | 2 42 | 2.21 |
| 100 | 184 | 154 | 148 | 50 | 130 | 100 | 3 81 | 3.31 |

## Диаграмма потери давления

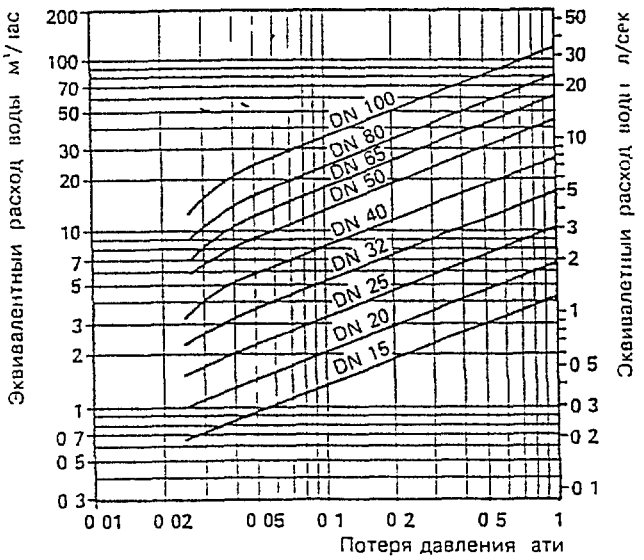


Диаграмма потери давления при открытом клапане при температуре 20 С
Указанные значения применимы для клапанов с установленными пружинами работающих в горизонтальном потоке При вертикальном потоке незначительные различия встречаются только в случае частичного открытия клапана
Графики представленные выше актуальны при температуре воды 20 С Для определения перепада давления для других жидкостеи необходимо подсчитать и использовать на графике объем расхода воды эквивалентный объему расхода используемои жидкости

$$Vw = \sqrt{\frac{Q}{1000}} \cdot V$$

Vw = Эквивалентныи объем расхода воды в л/с или м³/ч
Q = Плотность жидкости в кг/м³
V = Объем жидкости л/с или м³/ч
Информацию о перепаде давления для пара сжатого воздуха и газов можно получить в Спаиракс Сарко

## Обозначение в заказе

DCV 3 дисковый обратныи клапан типа для установки между фланцами BS4504 PN25

Корпус клапана маркируется следующ ім образом

| | | | |
|---|---|---|---|
| N | | Пружина из никелевого сплава | Стандартныи металлическии диск |
| N | — | Без пружины | Стандартныи металлическии диск |
| H | — | Пружина для сильных нагрузок | Стандартныи металлическии диск |
| V | — | Стандартная пружина | Диск, уплотненныи составом Viton |
| E | — | Стандартная пружина | Диск, уплотненныи составом EPDM |
| WV | — | Без пружины | Диск, уплотненныи составом Viton |
| WE | — | Без пружины | Диск, уплотненныи составом EPDM |
| HV | — | Пружина для сильных нагрузок | Диск, уплотненныи составом Viton |
| HE | — | Пружина для сильных нагрузок | Диск, уплотненныи составом EPDM |
| T | — | Клапаны, соотв. DIN 3230 часть 3 B03 | |

Для сочетания стандартнои пружины с металлическим диском не существует соответствующеи маркировки

## Оформление заказа

DCV 3 DN 40 Дисковый обратныи клапан Спайракс Сарко с корпусом из аустенитной стали для установки между фланцами BS10 табл "E"

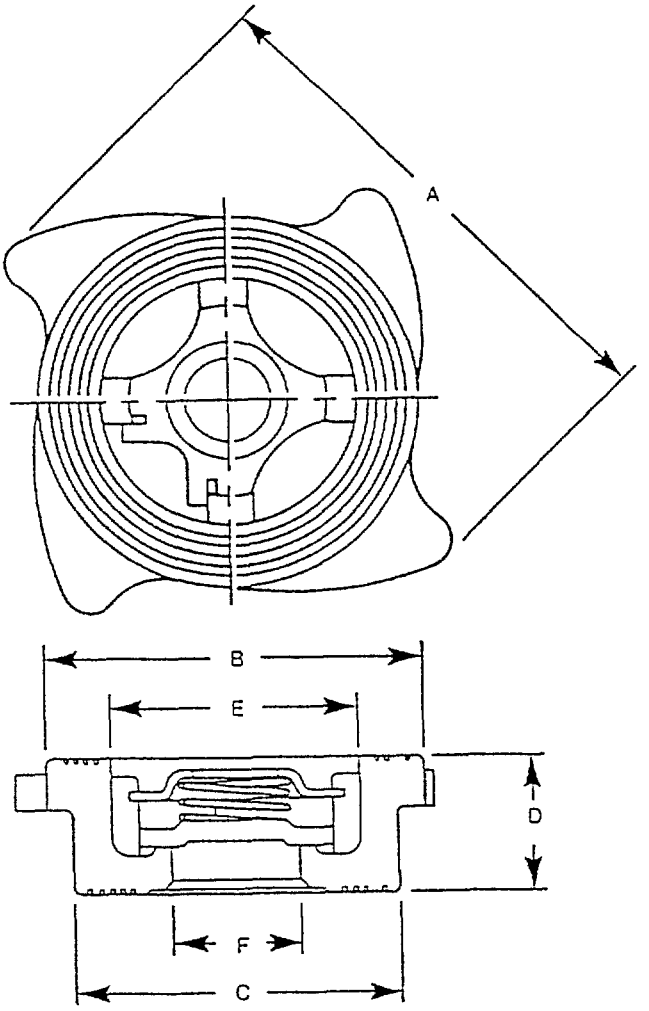


## Монтаж

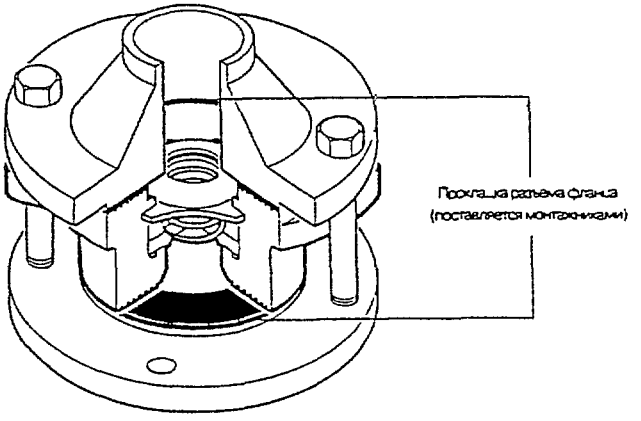


Дисковые обратные клапаны типа DCV должны устанавливаться в соответствии со стрелкой направления потока показывающей действительное направление потока среды
Клапаны с пружинами могут устанавливаться в любой плоскости Клапаны без пружин должны устанавливаться в вертикальных трубах с направлением потока снизу вверх
Дизайн корпуса позволяет приспосабливать его к различным фланцевым соединениям Для центровки клапана в трубопроводе корпус клапана поворачивается до соприкосновения с болтами разъема фланца Это подробно описано в инструкции по установке поставляемой с каждым клапаном DCV
**Примечание** Дисковые клапаны DCV не подходят для использования в местах с сильной пульсациеи потока например поблизости от компрессора

Certificate No FM163

ISO 9001

**spirax sarco**

ТІ-Р132-04
ST Issue 2

# Изолирующие клапаны с сильфонным уплотнением А3

## Описание

Фланцевые окончания и для стыковои сварки сильфонное уплотнечие изолирующие клапаны для пара конденсата и водных систем

## Условия ограничения

| | DN15 150 | DN175 300 |
|---|---|---|
| Конструкция корпуса | PN 40 | PN 25 |
| Макс предусмотренная темпер | 400 C | 400 C |
| Макс холодный гидравл тест | 60 ати | 38 ати |

## Рабочий диапазон (PN 40) DN 15 — 150

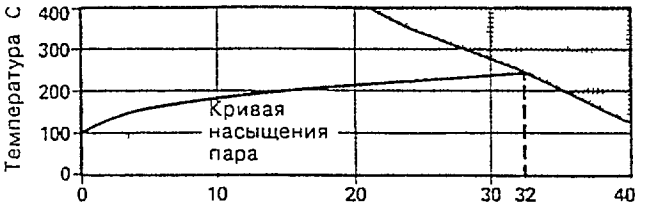


Модель PN 40 фланцевыI

Давление ати

## Рабочий диапазон (PN 25) DN 175 — 300

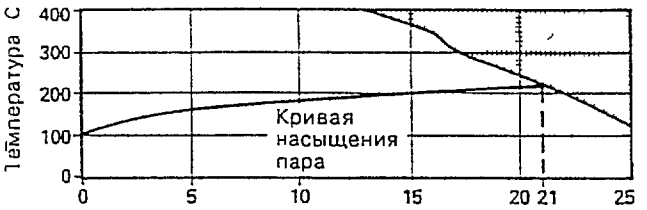


Модель PN 25 фланцевыи

Давление ати

Изделие не должно использоваться в этои области

## Размеры и соединения

DN 15 20 25 32 40 50 65 80 100 125 150 175 200 250 300
Фланцевый DIN 2545/BS4504 PN 40 (DN15 150)
Фланцевыи DIN 2544/BS4504 PN 25 (DN175 300)
DN 15 20 25 32 40 50 65 80 100 125 и 150
Стыковая сварка PN 40 DIN 3239 Part 1

## Материалы

| № | Деталь | Материал | |
|---|---|---|---|
| 1 | Корпус | Сталь | DIN G17245 GS C25 N |
| 2 | Крышка | Сталь (DN15 80)<br>Сталь(DN100 200) | DIN 17200 C 22 N<br>DIN 17245GS C25 N |
| 3 | Седло | Нержавеющая сталь | DIN 17440 X20 Cr13 |
| 4 | Диск/втулка | Нержавеющая сталь | DIN 17440 X20 Cr13 |
| 5 | Сильфоны | Нержавеющая сталь | DIN 17440 X10 CrNi MoTi 1810 |
| 6 | Стержень | Нерж сталь | DIN 17440 X20 Cr13 |
| 7 | Рукоятка | Прессованная сталь | |
| 8 | Заполнение стержня | | Графит |
| 9 | Штифты крышки<br>Гайки крышки | | DIN 17240 24 Cr Mo 5<br>DIN 17240 Ck 35 |
| 10 | Прокладка корпус/крышка | Расщепляющийся графит со вставкой из нерж стали | |

## Значения $K_V$

| DN | 15 | 20 | 25 | 32 | 40 | 50 | 65 | 80 | 100 |
|---|---|---|---|---|---|---|---|---|---|
| | 4 2 | 7 4 | 12 | 19 | 30 | 47 | 77 | 120 | 188 |

| DN | 125 | 150 | 175 | 200 | 250 | 300 |
|---|---|---|---|---|---|---|
| | 288 | 410 | 556 | 725 | 1145 | 1635 |

Для перевода $C_V$ (Англ ) = $K_V$ x 0 97 $C_V$ (США) = $K_V$ x 1 17

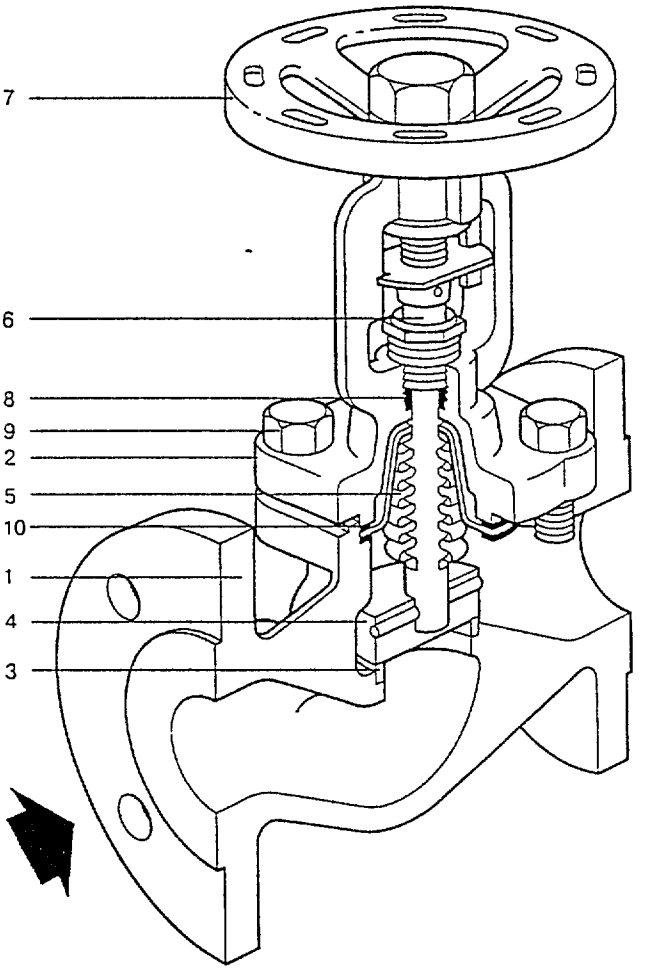


*Использование данного изделия может быть ограничено, если местными правилами эксплуатации установлены параметры ниже указанных.*
*С целью совершенствования данного изделия мы оставляем за собои право изменять его технические характеристики*

© Copyright 1995

## Размеры (приблизительные), мм

| Фланцевыи PN40 | | | | | Стыковая сварка PN40 | | | |
|---|---|---|---|---|---|---|---|---|
| DN | A | B | C | Вес | A | B | C | Вес |
| 15 | 130 | 204 | 140 | 4 3 кг | 130 | 191 | 125 | 2 8 кг |
| 20 | 150 | 204 | 140 | 4 8 кг | 150 | 191 | 125 | 2 9 кг |
| 25 | 160 | 210 | 140 | 6 6 кг | 160 | 197 | 125 | 3 9 кг |
| 32 | [illegible] | 213 | 140 | [illegible] 3 кг | 180 | 200 | 125 | 4 0 кг |
| 40 | 200 | 242 | 140 | 10 кг | 200 | 218 | 150 | 6 3 кг |
| 50 | 230 | 244 | 140 | 13 кг | 230 | 220 | 150 | 7 3кг |
| 65 | 290 | 275 | 180 | 19 кг | 290 | 238 | 175 | 12 кг |
| 80 | 310 | 294 | 180 | 26 5 кг | 310 | 257 | 225 | 14 7 кг |
| 100 | 350 | 369 | 300 | 39 5 кг | 350 | 340 | 300 | 23 6 кг |
| 125 | 400 | 389 | 300 | 57 кг | 400 | 360 | 300 | 40 кг |
| 150 | 480 | 416 | 300 | 82 кг | 480 | 390 | 300 | 56 кг |
| Фланцевыи PN 25 | | | | | | | | |
| 175 | 550 | 505 | 400 | 108 кг | | | | |
| 200 | 600 | 530 | 400 | 168 кг | | | | |
| 250 | 730 | 665 | 520 | 238кг | | | | |
| 300 | 850 | 720 | 520 | 339кг | | | | |

## Протекание седла

Коэффициент закрытия диска седла соотвестствует стандарту DIN 3230 BO1

## Обозначение

DN 25 SPIRAX SARCO Тип A3 изолирующии клапан с сильфонным уплотнением фланцевыи DIN 2545 PN 40

Примечание Если перепад давления выше указанного для определенного типа необходимо использовать уравновешивающую втулку

| Размер (DN) | 125 | 150 | 175 | 200 | 250 | 300 |
|---|---|---|---|---|---|---|
| Перепад давления (атм) | 2 5 | 17 | 13 | 10 | 6 | 4 |

## Установка

Устанавливать таким образом чтобы направление потока совпадало с направлением стрелки на корпусе рукоятка в удобном для Вас положении

## Запасные части

(Цифры относятся к рисунку на противоположной стороне)
Прокладка корпус/крышка (2 ШТ ) (10)
**Примечание — изделия хрупкие, обращаться осторожно**
Узел стержень/сильфоны (6 5)
Диск (4)
Рукояткаl (7)
Заполнение стержня (8)

### Обозначение

При заказе пользуйтесь таблицей приведенной ниже и не забывайте указывать тип и размер клапана

Пример 1 Прокладка корпус/крышка для DN 15 SPIRAX SARCO изолирующего клапана с сильфонным уплотнением A3

### Установка прокладки корпус/крышка

Снимите крышку с корпуса отвинтив болты
Одну прокладку можно сразу вынуть из углубления в корпусе не разбирая клапан дальше Поверхность корпуса имеющая контакт с прокладкои должна быть чистои
Чтобы заменить вторую прокладку которая находится между крышкой и упором сильфонов Отвинтите основную гаику рукоятки и снимите рукоятку Отожмите кнопку с автоблокировкой удерживающую пластинку индикации предотвращающую свободное вращение Ослабив геометизирующую гаику отвинтите и выньте стержень Установите вокруг стержня новую прокладку предварительно убедившись что поверхности упора сильфонов контактирующие с прокладкой чистые Произвести сборку в обратном порядке акуратно вставив стержень с прокладкои назад в корпус
Рекомендуемые крутящие моменты для болтов крышки

| | |
|---|---|
| DN 15 до 32 | 17 мм A/F 19/23 Nm |
| DN 40 до 65 | 19 мм A/F 33/37 Nm |
| DN 80 и 100 | 24 мм A/F 80/85 Nm |
| DN 125 до 175 | 24 мм A/F 70/90 Nm |
| DN 200 | 30 мм A/F 150/175 Nm |
| DN 250 и 300 | 36 мм A/F 240/280Nm |

Рекомендуется производить затягивание болтов крышки до указанных крутящих моментов после каждых 24 часов работы

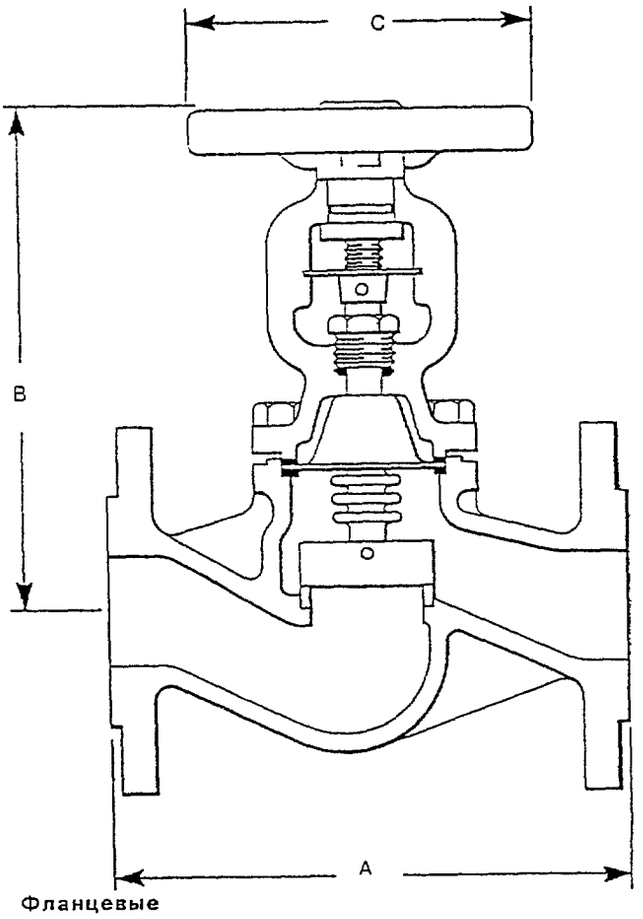


**Фланцевые окончания**

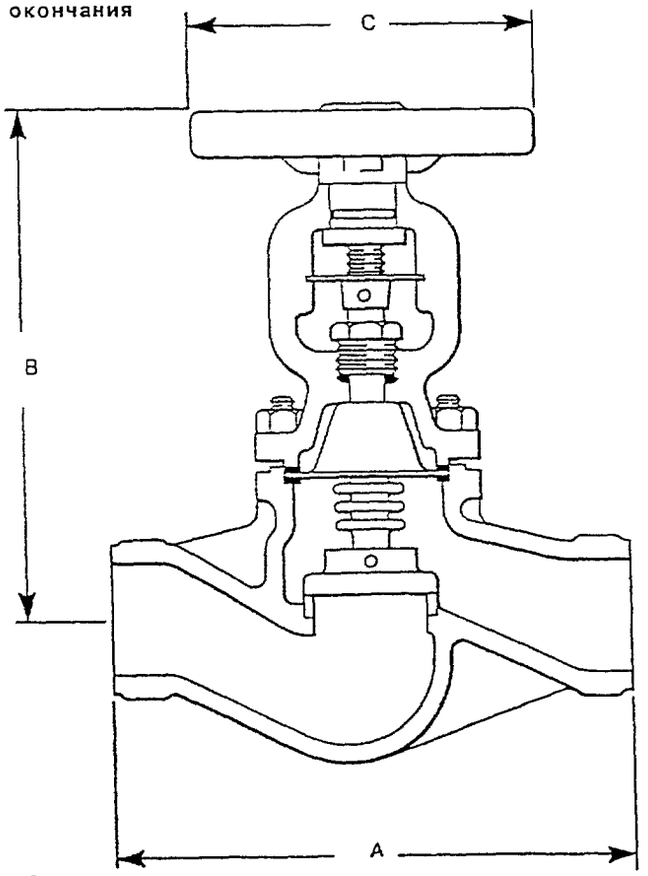


**Окончания для стыковой сварки**



93

# Семейство средств учета и контроля энергии ITEK

1 **Средства измерения и учета** *Обладают метрологическими характеристиками и предназначены для постоянного или периодического (экспресс анализа) измерения/регистрации физических величин*

**Электроэнергия**

*внедрение ITEK x1x позволяет потребителям рассчитываться за электроэнергию по одноставочному тарифу дифференцированному по зонам суток что в комплексе с мероприятиями по снижению потребления в часы максимума дает значительный экономический выигрыш что уже подтверждено более годовой эксплуатацией на многих объектах Украины*

**ITEK-210, ITEK-310** предназначены для коммерческого и технического учета электроэнергии (дифференцированного по времени) и построения автоматизированных систем учета и контроля использования электроэнергии (АСУЭ) совместно со счетчиками электрической энергии трехфазными индукционными снабженными устройствами формирования импульсов типа Е440 Е870 УП 1 УП-2 УП 3 СХ5000 или электронными (Siemens Landis&Gyr Alpha-ABB др ) имеющими импульсный выход

*Поддерживают* 64 (для ITEK 210) и 12 (для ITEK 310) каналов учета 4 тарифные зоны суточный график по всем каналам учета минимум 5 суток 2 независимых информационных интерфейса

ITEK 210 может быть использован совместно или взамен установленных систем ЦТ5000 (путем подключения к существующей матрице первичных измерительных преобразователей) Внесен в Госреестр средств измерении Украины

**ITEK-410** устройство на 4 канала учета аналогичное предыдущим Дополнительно к ним оно поддерживает также тарифы дифференцированные по энергии и мощности а также слежение за процессом потребления и управление им (если этот режим активизирован) Суточные графики хранятся по 4 каналам не менее 1 месяца

**ITEK-010** многоканальный многофункциональный определитель количества и качества электрической энергии

**Тепловая энергия, вода, пар, воздух, газ**

*внедрение ITEK x2x позволяет потребителям осуществлять учет ресурсов с высокой точностью и рассчитываться за потребленный ресурс по факту а не пропорционально занимаемой площади*

**ITEK-220, ITEK-320** Предназначены для использования в системах автоматизированного коммерческого учета и телеметрического контроля отпуска и потребления жидкостей газов пара и тепловой энергии совместно с любыми стандартными первичными измерительными преобразователями расхода температуры давления и перепада давлении имеющими нормированные выходные параметры у поставщиков (ТЭЦ теплосети котельные) и потребителей (промышленные предприятия объекты жилищно коммунального хозяйства) Изделия ITEK x20 разработаны в соответствии с требованиями РД 50 213 80 ПР34 70 010 85 ГОСТ 6651 84 и рекомендацией R75 МОЗМ )

*Предназначены для объектов* 1 группы учета (до 4 х) со сложной конфигурацией подающих и обратных трубопроводов (ITEK 220) и 1 или 2 группы учета (один объект) (ITEK 320)

**ПРД** широкодиапазонный преобразователь разности давлении измерительный ПРД предназначен для работы в системах автоматического контроля регулирования и управления технологическими процессами и обеспечивает непрерывное преобразование измеряемого параметра в унифицированный токовый выходной сигнал Является быстродействующим преобразователем и может использоваться для преобразования пульсирующих разностей давлений в унифицированный токовый сигнал с постоянной времени до 2 мс (предельно допускаемое рабочее избыточное давление 1 6 МПа и 40 Мпа)

2 **Средства контроля и управления** *Включают разнообразные средства создаваемые и адаптируемые под проект объединенные единством распределенной базы данных и протоколов обмена данными с другими членами семейства*

- коммуникационные средства (поддержка различных коммуникационных сред телефон /коммутируемый выделенный/ радио ВЧ связь промышленные последовательные интерфейсы)
- программные средства для организации распределенных баз данных реального времени анализа данных управления режимами оптимизации распределения ресурсов и др )

Программно технические средства семейства ITEK удовлетворяют современным требованиям по надежности аппаратной и информационной совместимости с продукцией других производителей

Некоторые члены семейства ITEK уже реализованы и находятся в промышленной эксплуатации более года

# Действующая автоматизированная система учета потребления энергоресурсов на промышленном предприятии на базе **ITEK-210** и **ITEK-220**

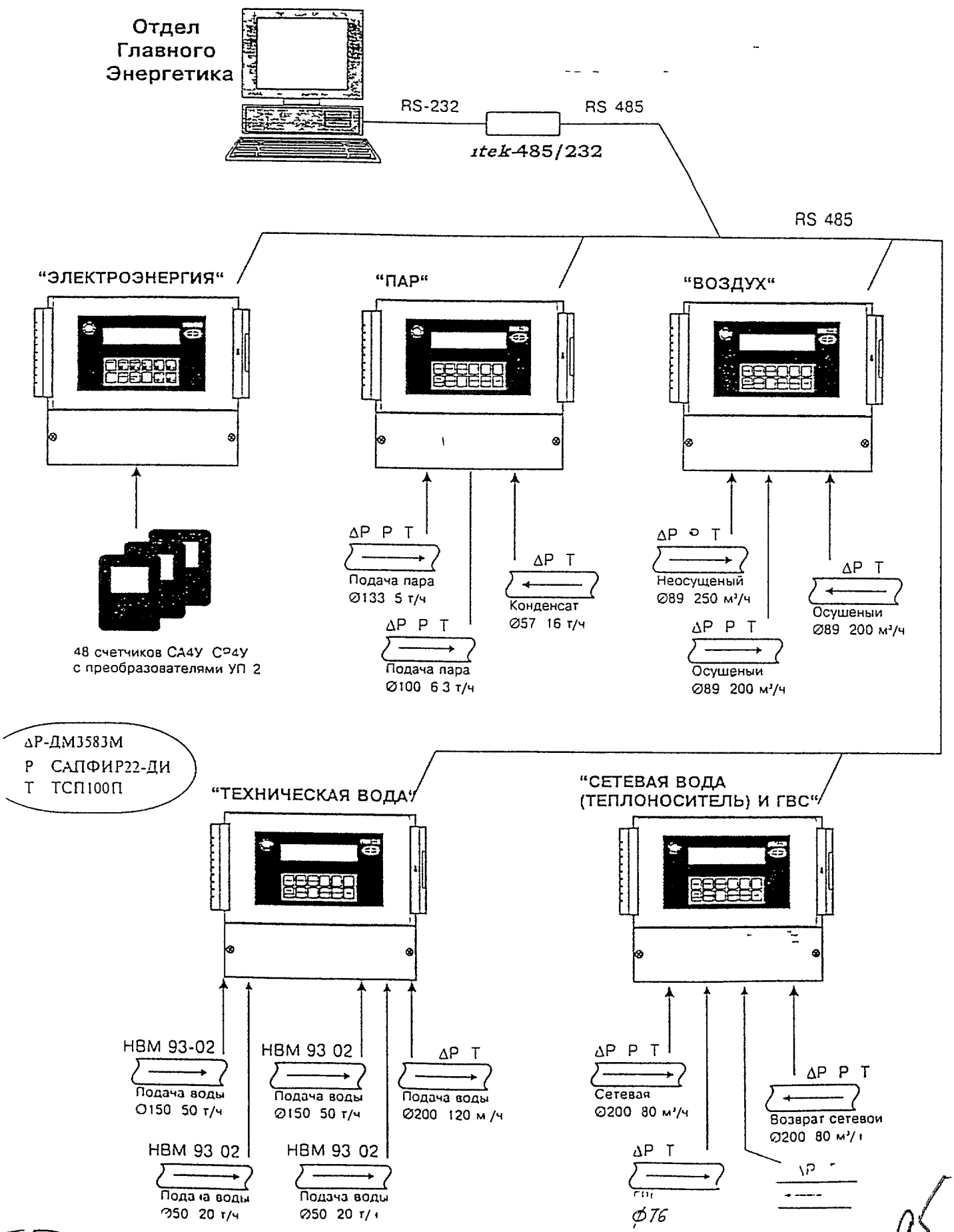


95

## ОСНОВНІ ТЕХНІЧНІ ХАРАКТЕРИСТИКИ АСОЕ

Кількість об'єктів (підстанцій) підключення до одного персонального комп'ютера (ПК) - до 16 ти

Кількість каналів обміну контрольно електроенергетичних даних на одному об'єкті від одного пристрій збору-збереження інформації (ПЗЗІ) до 256,

Кількість каналів обміну контрольно-облікових даних пристрій споживання (ПС) - до 32

Вид зв'язку модемний (по комутованій телефонній лінії), радіозв'язок, ВЧ зв'язок по виділеній 2 х провідній телефонній лінії (вибір обладнання зв'язку по проекту прив'язки),

Довжина виділеного 2 х провідного каналу зв'язку при опорі 0 0/5 ОМ/м до 10 км,

Швидкість передачі даних 200 2400 бод/с

Система спорядження апаратури контрольних і захисних пристроїв від втрати зв'язку по мережі живлення

Внутрішній таймер (годинник) і оперативна пам'ять ПЗЗІ має резервне джерело живлення (для захисту від втрати інформації у випадку відключення живлення в мережі)

Час зберігання (з моменту виникнення) даних в ПЗЗІ 7 діб (з можливістю резервування і відновлення лінії зв'язку або їх заміна у заміщуючого резервного робочого пристрою)

Час передачі до пристрою збору збереження інформації (ПЗЗІ) з комп'ютера мовлення в режимі реального часу не перевищує один раз за 7 діб

Періодичність накопичення даних про споживану електричну енергію по кожному приладу обліку 30 хвилин або 1 година

Система АСОЕ атестована Держстандартом України і відповідає вимогам України

Свідоцтво про атестацію виданий Держстандарту України
№ С 8 293 95 від 06 01 96р)

Система впроваджена на Львівському ДГХП Сірка (заміщ підстанції 186 розташована в Західному регіональному диспетчерському центрі Міненерго України (м. Львів) ДП Львівенергоремонт

Варіанти системи для інших видів підстанцій на об'єктах якщо їх більше, ніж обумовлено в системі

Обоснованість варіантів системи з одного підстанційного пункту 10 кВ при підключенні до даного пункту другого підстанційного орієнтовно коштує 11 тис грн

В комплект поставки входить повне забезпечення технічною документацією, навчання персоналу "під ключ", підготовка до експлуатаційної системи, гарантійне обслуговування 12 місяців (після закінчення гарантійного терміну гарантійне обслуговування)

Час показує до скільки вирахувань терміни окупності витрат Замовника витрати на впровадження організаційно технічних мероприятів на основі даних системи не перевищує 3 х місяців

*Додаткову інформацію можна отримати*


Підприємство "Гисрозбереження"
290034 м Львів
вул Гетьманська 3/26
тел/факс (0322) 72 55 91

Для листів на Україна
290000 м Львів
Головпоштамт, а/с 107



ЦЕНТРОЬЬЕ
№ 23882474

290034 м Львів
вул Гетьманська 3/26
тел/факс 72 55 91

Для листів 290000 м Львів
Головпоштамт а/с 102


## АВТОМАТИЗОВАНА СИСТЕМА ОБЛІКУ ЕЛЕКТРОЕНЕРГІЇ

Автоматизовані системи обліку та контролю споживання електроенергії (АСОЕ) призначені для автоматизованого комерційного та технічного обліку та контролю споживання електроенергії на промислових підприємствах

Система дозволяє здійснювати

- контрольно-ревізійною службою електроенергетичного підприємства
- оперативним контролем за споживанням електроенергії на рівні розподілу підприємства
- [illegible]
- [illegible] часу (графік завантаження Мінпромполітики України № 02 / 42 від 0) з використанням відомчих графіків
- Розмежування відповідальності за [illegible] обліку [illegible]

## ПЕРЕВАГИ АСОЕ ПЕРЕД ІНШИМИ

- [illegible] (ПЗЗІ) [illegible] часу до пристроїв збору збереження інформації (ПЗЗІ) для [illegible] даних про споживану електричну енергію [illegible] добу
- Обмеження [illegible] споживану електричну енергію (у [illegible]) [illegible] по кожному приладу [illegible] сумарному
- Обмеження вартості [illegible] (у [illegible]) [illegible] (у [illegible] тарифних [illegible] електричних мереж України)
- [illegible] при [illegible] перевищення [illegible] за добу місяць) їх перегляд на екрані монітора [illegible]
- Можливість [illegible] даних про [illegible] часу
- Синхронізація системного часу
- Інформація про перевищення [illegible] потужності по кожному приладу сумарної,
- Можливість обробки результатів обліку на вимогу Замовника

[illegible] електричної енергії

Для отримання вимірювального сигналу від індукційного лічильника електроенергії в системі використовуються як сучасні перетворювачі серії [illegible] (типу [illegible] 870) так і власного виготовлення. Система сумісна з новими покоління електронних лічильників.

Система складається з локальних підсистем (ЛП) на об'єктах. Структура локальних підсистем зображена на мал. 1 а, б.

Основні варіанти об'єднання локальних підсистем в систему зображені на мал. 2 а, б.

Можливі комбінації різних ліній зв'язку з основною системою.

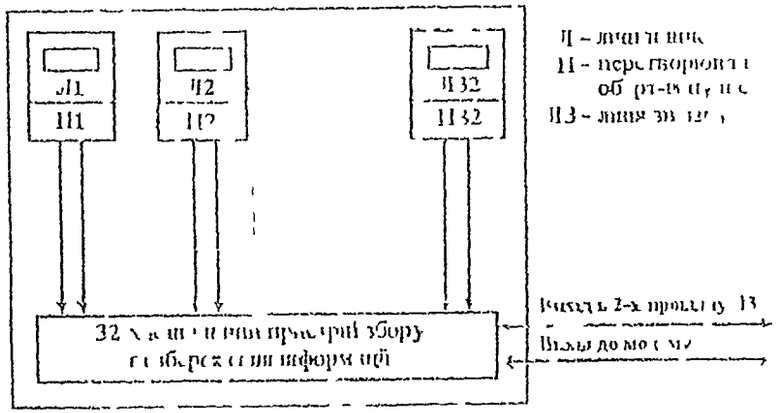


Мал. 1а. Локальна підсистема до 32-х приладів (ЛП-32)

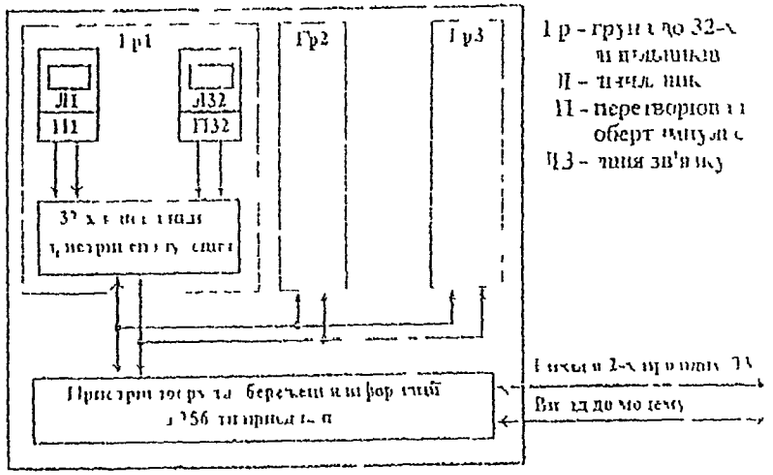


Мал. 1б. Локальна підсистема до 256-х приладів (ЛП-256)

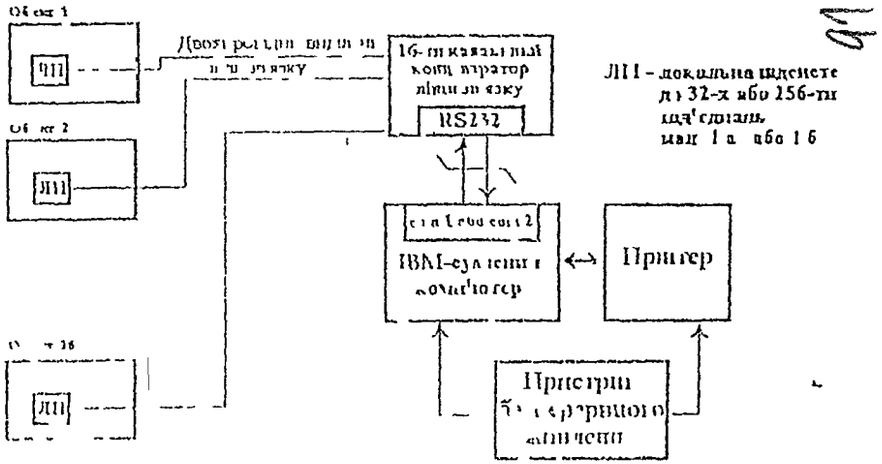


Мал. 2а. Автоматизована система обліку та контролю розходу електроенергії "виділення" лінії зв'язку

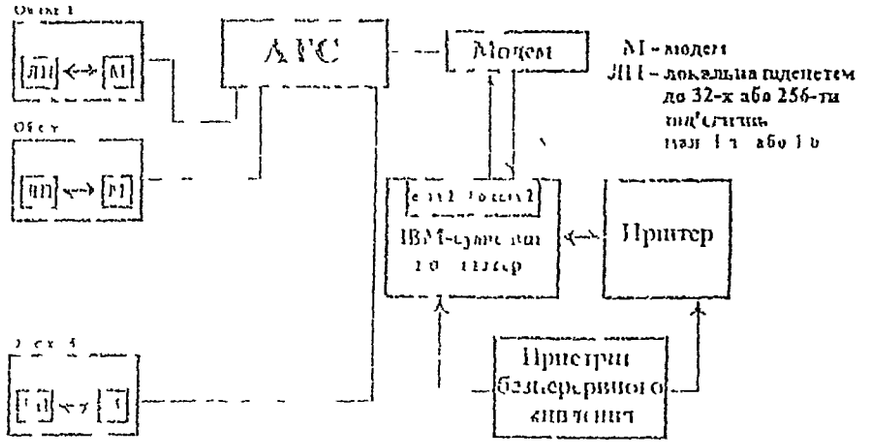


Мал. 2б. Автоматизована система обліку та контролю розходу електроенергії віддалених розподілених об'єктів

ІТК "Автоматика" ІТК "Automatika"

254053, м.Київ-053, а/с 7 УКРАЇНА
a/b 7, Kiev-053, 254053 UKRAINE
tel. (044) 211-8253 fax (044) 213-0638

# Руководителям предприятий, организаций, учреждений

Из-за повышения цен на энергоносители на Вашем предприятии значительно увеличились расходы на потребляемую тепловую энергию (газ, пар, воду). Мы можем помочь Вам сократить эти расходы.

ИТК "Автоматика" изготавливает, устанавливает, аттестует и внедряет автоматические системы коммерческого учета энергоресурсов САКУРА, при помощи которых Вы сможете

а) уменьшить оплату за энергоресурсы на 20 50%, если ранее систем учета не было;

б) уменьшить оплату за энергоресурсы на 5 .30%, если на предприятии были системы учета на самопишущих приборах;

в) заменить до 10 самопишущих приборов;

г) автоматизировать обработку данных,

д) существенно упростить эксплуатацию

САКУРА позволяет одновременно на одном устройстве вести учет пара, воды, тепловой энергии, газа (до 6 труб).

Подобных отечественных систем не существует, стоимость зарубежных в 3 - 5 раз дороже.

Цена системы — от 1500 долл. США (в крб по курсу НБУ на момент оплаты) и более — в зависимости от типов учета, количества точек учета и оборудования, имеющегося у заказчика.

Форма оплаты — аванс 50% цены, оставшаяся часть — после внедрения.

Сроки внедрения — от 1 до 3 месяцев.

Опыт внедрения систем в гг Киев, Севастополь, Днепропетровск, Белая Церковь и др. показывает их надежную работу в период и после гарантийного срока службы.

Директор ИТК "Автоматика" И.Г.Варавва

# САКУРА

- аттестована Госстандартом как система коммерческого учета расхода и количества энергоносителей

# САКУРА

обеспечивает
автоматический ввод информации и сигнализацию ухода 0 измерителей параметров,
ввод информации с клавиатуры,
вывод информации на индикацию,
- ведение календаря, времени суток, суточных и месячных архивов,
- сигнализацию выхода параметров за пределы допусков,
- перенастройку системы при изменении ее конфигурации,
ускоренную работу системы для наладки и проверки,
- вывод информации на печать и по интерфейсу RS 232,
восстановление данных при отключении основного электропитания на срок не более 10 суток,
- автоматическое переключение с двухтрубного измерения расхода теплоносителя на однотрубное,
- документирование любого доступа к системе

# САКУРА

осуществляет
- автоматическую выдачу на печать -
каждый час - сообщения за этот час,
каждые сутки - суточный журнал,
каждый месяц - месячная сводка и акт об отпуске энергоресурсов (в 2 экз),
служебные параметры (дата, время, место),
выдачу на печать и на индикацию по вызову дополнительно к вышеприведенному
текущее состояние параметров на момент вызова,
суточный (за 3 суток) и месячный (за 2 месяца) архивы данных,

# САКУРА

имеет следующие основные технические данные

| | |
|---|---|
| Входные сигналы (до 12) токовые (до 8) | 0 5 мА, 4-20 мА |
| от термометров сопротивления (до 8) ТСМ, ТСП | любых градуировок |
| Основная погрешность системы (зависит от конфигурации), % | 1,5 3,5 |
| Питание от сети переменного тока | 220 В +10 -15%, 50±1 Гц |
| Температура окружающей среды, градус | +5 –40 |
| Количество точек учета, шт | до 6 |

Динамический диапазон измерения расходов от 2 до 100 %,

# САКУРА

состоит (по согласованию с заказчиком) из
- измерителей перепада давления, давления, температуры (до 12 шт ),
- электронного комплекса с печатающим устройством и преобразователем сигналов термометров сопротивлений (до 8 шт )

Производство, поставка, монтаж, наладка, метрологическая аттестация, гарантийный ремонт техническое обслуживание
осуществляется ИТК Автоматика"
254053, г Киев 53, а/я 7
тел (044) 211 82 53, факс (044) 211-82-44

42 1162 ТУ 25-7363 025 88

# ПІРОМЕТР ЧАСТКОВОГО ВИПРОМІНЮВАННЯ «СМОТРИЧ-М6П»

Призначений для безконтактного вимірювання температури об'єктів при відпрацьовуванні різноманітних технологічних процесів та експрес-контролю температури обладнання

Застосовуються практично у всіх галузях промисловості, а також в сільському господарстві та наукових дослідженнях

Показ температури на табло в цифровому вигляді

Пірометр мікропроцесорний

| | |
|---|---|
| Діапазон вимірювальних температур, °С | від мінус 35 до 1100 |
| Основна похибка, °С | ±(0,01tвим +1) |
| Робочий спектральний діапазон мкм | від 8 до 14 |
| Показник візування | 1 30 |
| Час установлення показів, с | 2,0 |
| Номінальна робоча відстань, м | 1,0 |
| Живлення, В | вмонтована батарея з напругою 6,25 |
| Споживана потужність, Вт | 1,0 |
| Маса, кг | 1,5 |
| Габаритні розміри, мм | |

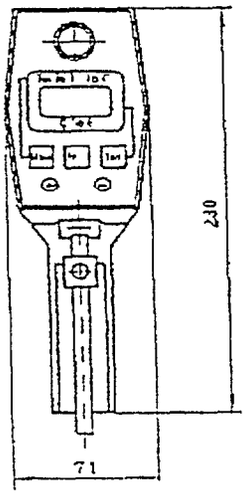


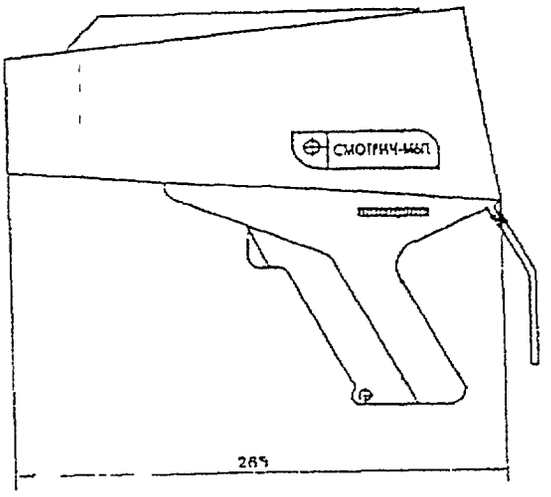

## Технічні вимоги

1 Пірометр грунтується на конструктивній, схемотехнічній та метрологічній базі агрегатного комплекту стаціонарних пірометрів АПІР-С (1 черга)

1 1 Комплектність (ПВ-6 + ПЧД-131 або ПЧД-121) уточнюється при замовленні

## 2. Спеціальні технічні вимоги на пірометр

| | |
|---|---|
| 2 1 Градуювальна характеристика спеціальна, індивідуальна або стандартна з шириною діапазону (250 - 1000) °С | |
| 2 2 Спектральні діапазони, мкм | 0,8 - 1,2, 1,2 - 1,8 |
| 2 3 Загальні діапазони вимірюваних температур відповідно до спектральних діапазонів, °С | 800 - 2500, 250 - 1300 |
| 2 4 Показник візування, в залежності від типорозміру ППП, нижньої границі вимірювання та спектрального діапазону | 1/10 - 1/300 |
| 2 5 Робоча відстань фіксована, уточнюється при замовленні, м | 0,2 - 20 |
| 2 6 Основна похибка комплекту ПВ-6 + ПЧД-131 або ПВ-6 + ПЧД-121, % | 0,6 - 1,0 |

**З питань придбання пірометрів звертатись.**

290053, м Львів, вул Наукова, 3
НВО «Термоприлад», тел 39-07-54
63-02-77 п Вічинюк М Г

BEST AVAILABLE COPY

101

## Noncontact Thermometer

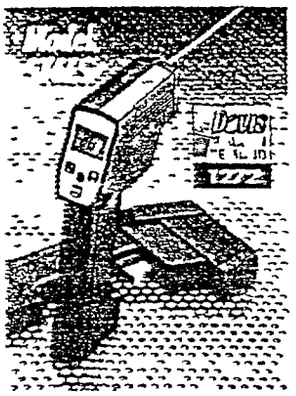

| | ST2 | ST4 | ST6 |
|---|---|---|---|
| Max m n and AVG m m | | | |
| Recall as ad ng | | | |
| D a d | | | |
| Hi and J ad o and a alarms | | | |
| LcD ack r | | | |
| Case | | | |
| Em s | | | |
| Em a r a r | | | |
| Tem r r r | | | |
| ST | | | |
| ST | | | |
| Accur r ng or 2 C 9 mic er s greater at 3 a C b4-82 9 am nt temperature | | | |
| R o u r ad g 2 9 m ch ver s a eater | | | |

| Catalog No | Model | Description | Price |
|---|---|---|---|
| RY 11 01 | ST2L | Noncontact Thermometer with display hold and LCD backlight | 51 0 |
| RY 11.02 | ST L | Noncontact Thermometer with added features of high and low alarms min max and avg m and expanded m erature range | 49 0 |
| RY709203 | ST6LS | Noncontact Thermometer with ST features plus precision laser sighting Includes a hard case | 0 |
| **Options** | | | |
| RY709 04 | S2 | Subzero option 32 a -00 C | -0 00 |
| RY 082.5 | NI | NIST Traceable Certificate | 1 0.00 |
| RY811 03 | STACPK | Pouch and carrying kit | 0.00 |
| RY811.07 | STACHS | Water resistant belt c p hard case | 0 0 |

## Thermal Imager

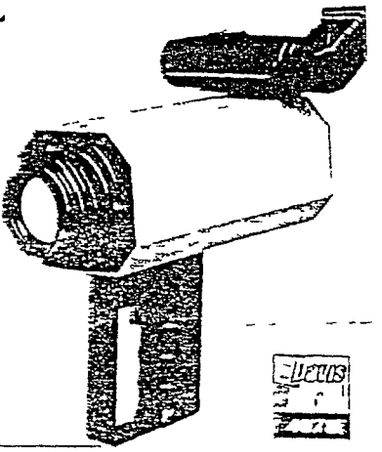

Locate faulty connections and fuse boxes in mo or ol centers
Monitor motors and bearing adjustment for bad bearings and misalignments
Check steam traps and valves
Check refractory and insulation
Locate infrared or breakdowns
Inspect building envelopes for air leakage

| | |
|---|---|
| F ld o | |
| Em r | |
| mera | |
| r | |
| s av | |
| mous ar | |
| c nair on | |

◄ Subject

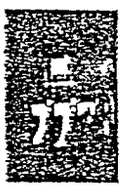

Lens view ►

| Catalog No | Model | Description | Price |
|---|---|---|---|
| SC 831 1 | 7 31 | 1 h m a r gar c m ra es evaluate c i r du c ar r nd a | 5 0 |
| **Options** | | | |
| | | | 2 0 0 |
| 37 7 | | | 4 0 |
| 82 | | em | |
| 8 | | | 2 0 0 |

## Portable Infrared Thermometer

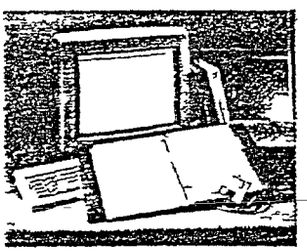

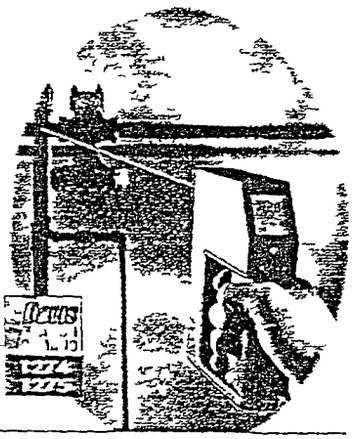

| | | | |
|---|---|---|---|
| | 4 0 | 1 0 | 1 0 |
| m erat ange | 3 a 00 F (18 a 0 C | 1600 F 70 | |
| s y | Fixed 0 5 | 0 0 a 0 gitally m ta le | |
| m erat meas ment | Lo per MAX 1 0 AVG R call as ad ng s or s o m m | | |
| Io uc a arm | | | |
| r | | | |
| C r | | | |
| a R C or r er a e r | | | |
| m a v s n R | | | |
| o r m | | | |
| a acv 1 at a ac n 1 0 r m c a r | | | |
| r 0 ar a ac r u c r mic r r r | | | |

| Catalog No | Model | Description | Price |
|---|---|---|---|
| 7311 1 | PM20L.U | Infrared Thermometer with Laser ang | 7 5 0 |
| RY02 | PM20L.U | Infrared Thermometer with Laser S ang | 0 0 |
| R 07 | P M40L.U | Infrared Thermometer a er S ang | 35.00 |
| 7 0 | P M 0L.U | Infrared Thermometer with Laser S grang | 5 0 |
| IST R13 | — | NIST Traceable Certificate | 1-9 00 |
| IST R 9 | — | NIST Traceable Certificate with Data | 0 00 |

r ease ng r or accessories and options

## Infrared Thermometer

NEW!

Large LCD Display
14 a 72 F 10 a 00°C
RS 232 interface
Data hold

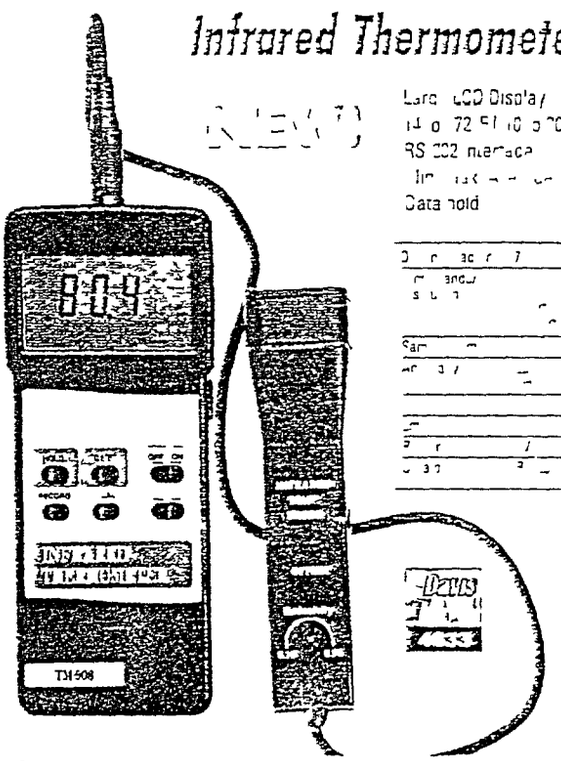

| | |
|---|---|
| D r ac r 7 | |
| r and s u r | |
| Sam r | |
| r | |
| r | |
| u 3 r | |

| Catalog No | Model | Description | Price |
|---|---|---|---|
| Lu g | -C8 | 1 a r h rmometer | 52 0 |
| NIST R77 | — | NIST acea e Certificate with Data | 0 |

# Ultrasonic Leak Technology for Energy Conservation, Safety and Loss Prevention

TEST
- Compressed Air Leaks • Gas Leaks
- Vacuum Leaks
- Electrical Leaks (such as arcing)
- Seals & Gaskets • Heat Exchangers
- Developed by the Worldwide Leader in Ultrasonic Instruments

*Includes a Video Training Program for Ultrasonic Leak Detection Techniques*

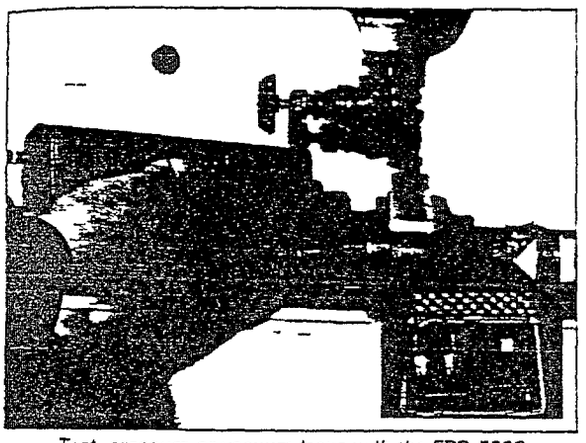

*Test pressure or vacuum leaks with the EPD 500S*

### The High Cost of Procrastination

Estimates of loss/year costs of air and Nitrogen have become staggering The cost of savings of the relatively simple project or repairing leaks are tremendous

The estimated cost per year of a 1/8" air leak is $2 980 00 If only one 1/8" air leak was assumed for each of our main plant areas the total annual loss cost would be approximately $23 840 00 Nitrogen leaks are even more expensive events One Nitrogen leak of only 1/16 costs a whopping $10 700 00 (est.) per annum If we use the air leak scenario for the 1/16 Nitrogen leak the loss cost would be almost $75 000 00 A larger leak such as a broken 1/4" OD instrument line will cost a plant $270 00 per day THAT'S OVER $90 000 00 per year in Nitrogen for ONE leak

A total savings of nearly $100 000 00 annually just for repairing fourteen or so small leaks a fair return There are likely more than that when one considers the total number of possible leak sources there are in some plants The savings is more than sufficient to cover and definitely justifies the cost of the repair staff the detection equipment all the tools a manlift and the materials needed to make the repairs

Under these circumstances and with the costs involved in today's competitive market a leak detection program must be an imperative As the program progresses routine leak monitoring could and should be undertaken to assure that a high level of line leakage does not again become a source of loss to the plant

air leak costs based on 100 psig $0 22/Mcf 867 hrs./yr

Nitrogen leak costs based on 150 psig $0 214/Ccf 8670 hrs/hr

(Industry standards for leakage and nominal area charges for Nitrogen Cost/Ccf often INCREASES with excessive consumption)

By sensing the subtle high frequency emissions of ultrasound the **EPD-500S** allows you to detect leaks in practically any type of vacuum or pressurized gas system Using state of the art electronics the **EPD 500S** converts ultrasonic signals between 20 kHz and 60 kHz into the audible range By scanning around suspect areas the sound of a leak will be heard in headphones and seen as intensity increments on an analog meter All you need to do is scan an area and follow the leak sounds to the loudest point it s that simple

Because it is sensitive to ultrasound the **EPD-500S** will ignore most ambient plant noises making it easy to use in loud plant environments

### TESTING FLEXIBILITY

The **EPD-500S** senses only the turbulent flow produced by a leak For this reason it may be used to test any type of gas leak even if wind is blowing or if there is a saturation of the gas in an enclosed environment

**Complete Kit** The **EPD 500S** includes noise attenuating headphones rubber focusing extension recharger (110 or 220V) video training operation manual carrying case and 1 year warranty

*EPD 500S KIT* ..... *$1495 00*

### TRY EPD S *UNIQUE* ULTRASONIC TONE TEST

This unique ultrasonic transmitter emits a powerful patented warbling ultrasound Place the Warble Tone Generator inside a tank behind a wall window or door The intense signal will instantly flood the area with ultrasound and seek a pathway of least resistance through a broken seal gasket or pin hole Ideal for use when conventional pressure or vacuum testing is not possible Must be used with EPD-500S

*EPD WTG1* ..... *$ 395 00*
*EPD WTG2SP* ..... *$ 425 00*
*EPD 500STG (Scanner & Tone Generator)* ..... *$1695 00*

*Covered by one or more of the following patents*
*4416145 EP015115 502674183*

*EPD WTG2SP 1" NPT Fitting*

*EPD WTG1 Ultrasonic Transmitter*

### COMPRESSED AIR – It Isn't Free TRAINING VIDEO

This humorous video teaches how to reduce compressed air waste and save a plant hundreds of thousands of dollars a year in energy bills One sitting pays you back.

*EPD VT110* ..... *$99 00*
*EPD VT110S** ..... *$99 00*

Spanish

LEAK DETECTION

# FLUKE *Clamp*

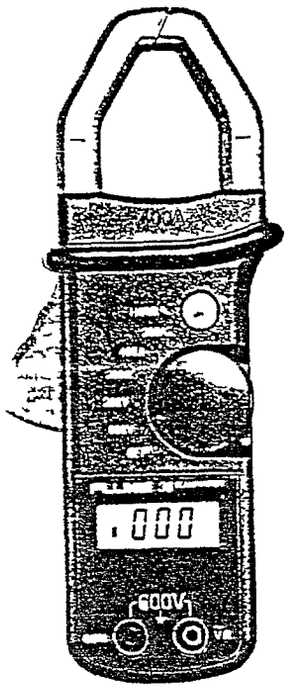

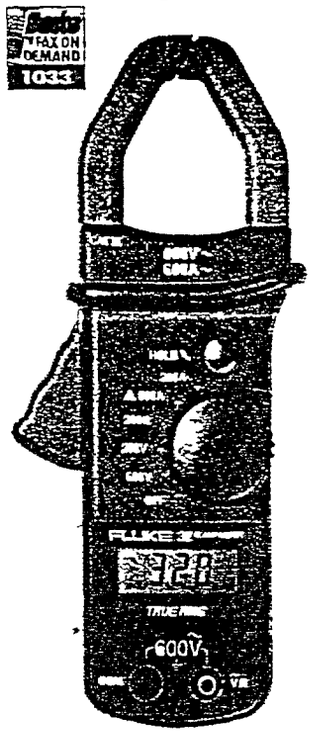

## *Models 30, 32 True-RMS*

| SPECIFICATIONS 30,32 | | | | |
|---|---|---|---|---|
| FUNCTION | RANGE | RESOLUTION | BEST ACCURACY | |
| | | | 30 | 32 |
| AC Current | 600A | [illegible] | N/A | [illegible] |
| | 400A | 1A | [illegible] | [illegible] |
| | 100A | 0.1A | [illegible] | [illegible] |
| AC Volts 40-400Hz | 100V | [illegible] | [illegible] | [illegible] |
| | 600V | 1V | | |
| Resistance | 600Ω | [illegible] | | [illegible] |
| Crest Factor | 400A | | N/A | ≤2.0 |
| | 600A | | | ≤2.5 |

| FEATURES | 30 | 32 |
|---|---|---|
| True RMS | | |
| AC Current | 400A (Average Sensing) | 600A (True RMS) |
| AC Voltage | 600 V | 600 V |
| Resistance | 400Ω | 400Ω |
| Continuity Beeper | Under 20Ω | Under 20Ω |
| Display Hold | | |
| Digital Display/Counts | 4000 | 4000 |
| Safety Hand Guard | | |
| Carrying Case | | |

## *Models 31, 33 True RMS*

| SPECIFICATIONS 31, 33 | | | | |
|---|---|---|---|---|
| FUNCTION | RANGE | RESOLUTION | BEST ACCURACY | |
| | | | 31 | 33 |
| AC Current (RMS) | 0.1A to 400A (700A max sine wave) | 0.01A on 40A range and above | 2% [illegible] | [illegible] |
| Frequency | 0.5 to 10kHz | 0 Hz<1kHz 1Hz>1kHz | 0 [illegible] | [illegible] |
| Crest/ Instantaneous Peak | 1000A peak max | 0.2 on 40A range 0.4A on 400A range 4A above 400A range | N/A | [illegible] |
| Crest Factor | 400A | | [illegible] | ≤2.5 |

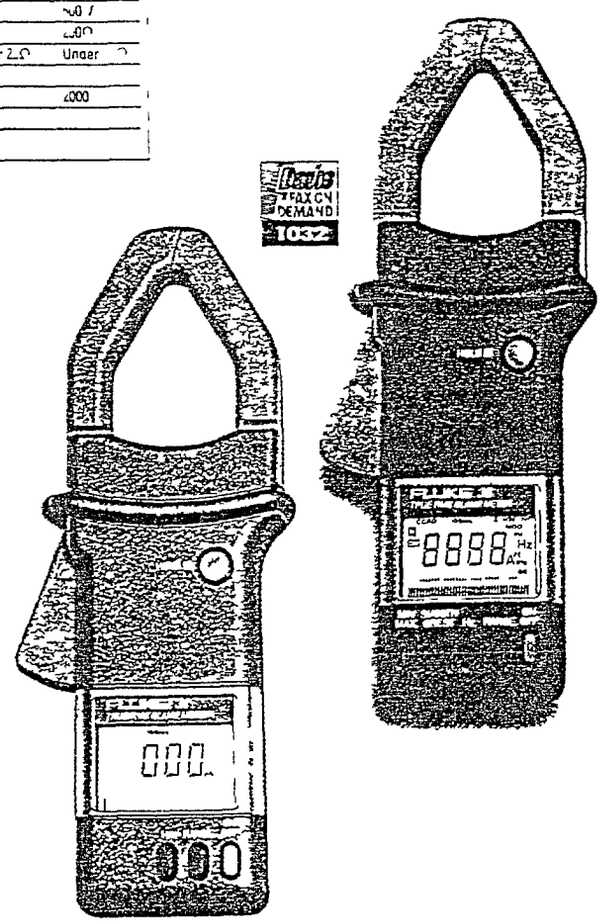

| FEATURES | 31 | 33 |
|---|---|---|
| True RMS | | |
| AC Current | 400A | 600A |
| Frequency | 0.5kHz | 0.5kHz |
| Auto/Manual Ranging | | |
| Display Hold | | |
| Digital Display/Counts | 10,000 | 6000 |
| Analog Bar Graph Segments | 40 | 40 |
| Safety Hand Guard | | |
| Clip On Holster | | |
| Crest/Instantaneous Peak | | |
| Fluke Fax on Demand | | |
| Smoothing | | |

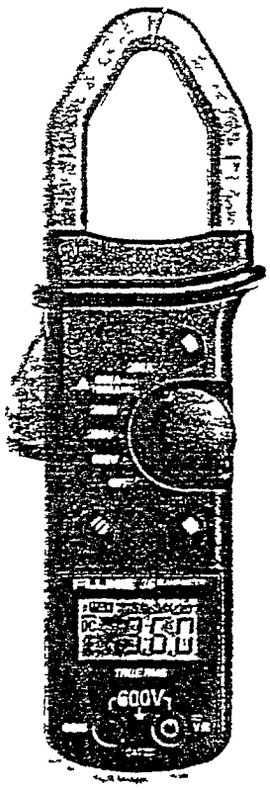

**NEW!**

## *Model 36 True-RMS*

| FEATURES | 36 |
|---|---|
| True RMS | |
| AC Current | 600A |
| DC Current | 600A |
| AC Voltage | 600V |
| DC Voltage | 600V |
| Resistance | 60Ω |
| Continuity Beeper | |
| Max/Min Hold | |
| Safety Hand Guard | |
| Carrying Case | |

| SPECIFICATIONS 36 | | | | |
|---|---|---|---|---|
| FUNCTION | RANGE | ACCURACY | CREST FACTOR | OVERLOAD PROTECTION |
| DC Current | 60A 1000A 600A | [illegible] 1000A, 3% rdg 3 digits 200A 1.9% rdg digits | N/A | 1000A |
| DC Volts | 600V/1000V | 1.5% Rdg 3 Digits | N/A | 1000V RMS continuous |
| AC Current (45—400Hz) | 600A 200A | 0-600A 2% Rdg 3 digits 0.5-200A 2% Rdg 3 digits | 2:1 [illegible] | 600A [illegible] (1 min) |
| AC Volts (45—400Hz) | 600V/1000V | 1% R 3 digits | ≤1.1 (voltage ≤333V) | 1000V RMS |
| Ohms | 400Ω | 1% R 5 digits | N/A | 600V RMS continuous |

| Catalog No | Model | Description | Price |
|---|---|---|---|
| FL 30000 | 30 | Clamp On Meter (Average sensing) | $109.00 |
| FL 30001 | 32 | Clamp On Meter (True RMS sensing) | 149.00 |
| FL 32001 | 31 | Clamp On Meter | 229.00 |
| FL 33002 | 33 | Clamp On Meter | 269.00 |
| FL 36 | 36 | Clamp On Meter (True RMS sensing) | 219.00 |
| NIST Cert 0 | — | NIST Traceable Certificate | 35.00 |
| NIST CP11 | — | NIST Traceable Certificate with Data | 135.00 |



BEST AVAILABLE COPY

104

# Power Factor with Built in Datalogger
## Optional 3-Phase Adapter and RS 232 Module with PC software

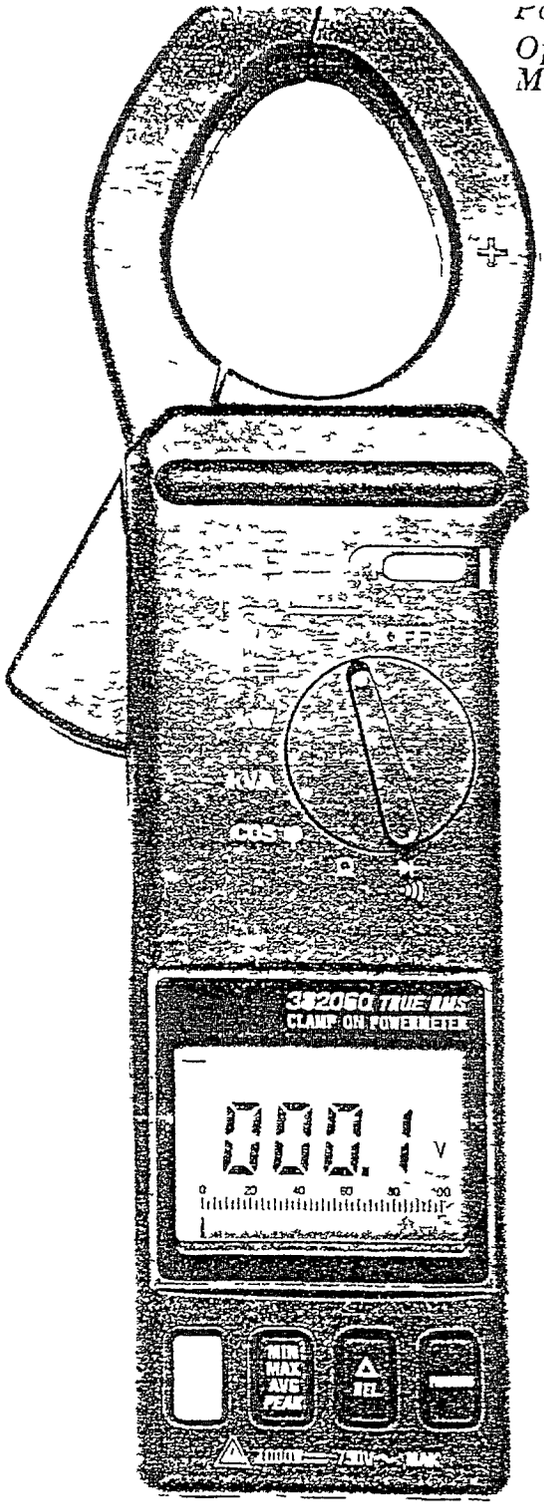


### Features

- Display True RMS Volts Amps Watts MAX/MIN and Average
- Display Phase Angle in degrees and CosØ with inductive or capacitance indication
- Clamp jaws open to 1.8 (46mm)
- Built in recorder datalogs up to 1600 readings
- Full function display on large 4 digit 2 LCD with fast 40 segment bar graph and Peak Hold
- Autoranging or manual range
- Optional 3 Phase Adapter connects to bottom of meter and enables user to measure True Power (KW) Apparent Power (KVA) and Power Factor (CosØ) of balanced and unbalanced loads using clamps and supplied clip-on leads
- Optional RS 232 module with PC software to capture and display data
- Complete with 9V battery allligator clips leads, & case

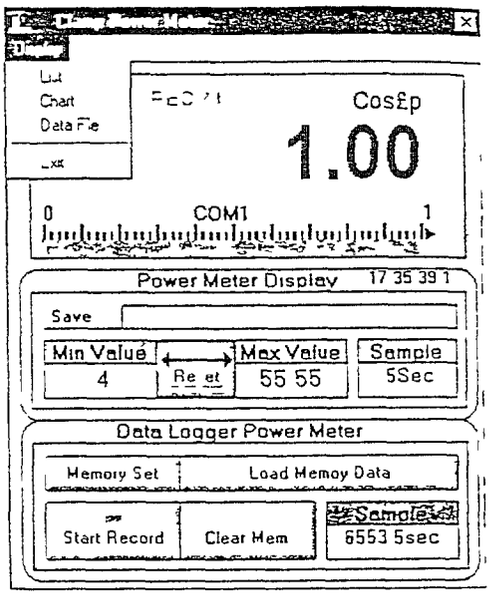


PC software included

### SPECIFICATIONS

| Display Mode | Range | Accuracy | Resolution | Over |
|---|---|---|---|---|
| [illegible] | [illegible] | [illegible] | [illegible] | [illegible] |
| [illegible] | [illegible] | [illegible] | [illegible] | [illegible] |
| Power [illegible] | [illegible] | [illegible] | [illegible] | [illegible] |
| Peak [illegible] | 1000A | [illegible] | [illegible] | [illegible] |
| [illegible] | [illegible] | [illegible] | [illegible] | [illegible] |
| AC [illegible] | [illegible] | [illegible] | [illegible] | [illegible] |
| DC [illegible] | [illegible] | [illegible] | [illegible] | [illegible] |
| AC [illegible] | [illegible] | [illegible] | [illegible] | [illegible] |
| DC [illegible] | [illegible] | [illegible] | [illegible] | [illegible] |
| [illegible] | [illegible] | [illegible] | [illegible] | [illegible] |
| Phase [illegible] | [illegible] | [illegible] | [illegible] | [illegible] |
| Phase [illegible] | [illegible] 180 | | | |
| [illegible] | [illegible] | [illegible] | [illegible] | [illegible] |
| Sample Time | | Peak [illegible] | [illegible] | [illegible] |
| Dimensions [illegible] | | [illegible] | [illegible] | [illegible] |

### ORDERING INFORMATION

| Catalog No | Model | Description | Price |
|---|---|---|---|
| EH382060 | 382060 | Clamp On Power Datalogger | 359.00 |
| EH382061 | 382061 | 3 Phase Adapter | [illegible] |
| EH382062 | 382062 | Plug in RS 232 Interface Module | [illegible] |
| NISTCPPCT | — | NIST Traceable Certificate | 85.00 |
| NISTCPP28 | — | NIST Traceable Certificate with Data | 135.00 |

97/ 69c1

# ПРАЙС-ЛИСТ
## ОАО "ПОЛТАВСКИЙ ЗАВОД ГАЗОРАЗРЯДНЫХ ЛАМП"

Адрес Полтава ул Заводская 3 тел/факс 66-49-90 66-09-01

| Тип изделия | Ед изм | Партия | Форма оплаты (Цена за единицу продукции в грн) Предоплата | Последующая : | Бартер |
|---|---|---|---|---|---|
| Лампы люминесцентные низкого давления | | | | | |
| 18 Вт | шт | 1-3000 | 1-98 | 2-10 | 2-22 |
| | | 3000-7000 | 1-92 | 2-04 | 2-10 |
| | | 7000-15000 | 1-80 | 1-92 | 1-98 |
| | | свыше | 1-74 | 1-80 | 1-92 |
| 20 Вт | шт | 1-3000 | 1 98 | 2-10 | 2-22 |
| | | 3000-7000 | 1-92 | 2-04 | 2-10 |
| | | 7000-15000 | 1-80 | 1-92 | 1-98 |
| | | свыше | 1-74 | 1-80 | 1-92 |
| 40 Вт | шт | 1-3000 | 2-28 | 2-40 | 2-52 |
| | | 3000-7000 | 2-16 | 2-28 | 2-40 |
| | | 7000-15000 | 2-04 | 2-16 | 2-28 |
| | | свыше | 1-92 | 2-04 | 2-46 |
| 80 Вт | шт | 1-3000 | 2-88 | 3-00 | 3-18 |
| | | 3000-7000 | 2-76 | 2-94 | 3-06 |
| | | 7000-15000 | 2-64 | 2-82 | 2-94 |
| | | свыше | 2-52 | 2-64 | 2-88 |
| Лампы ртутные высокого давления общего назначения | | | | | |
| ДРЛ 125 Вт | шт. | 1-1000 | 10-08 | 10-62 | 11-16 |
| | | 1000-3000 | 9-72 | 10-20 | 10-74 |
| | | 3000-7000 | 9-18 | 9-60 | 10-08 |
| ДРЛ 250 Вт | шт. | 1-1000 | 10-08 | 10-62 | 11-16 |
| | | 1000-3000 | 9-72 | 10-20 | 10-74 |
| | | 3000-7000 | 9-18 | 9-60 | 10-08 |
| | | свыше | 8-88 | 9-36 | 9-84 |
| ДРЛ 400 Вт | шт. | 1-1000 | 12-06 | 12-66 | 13-32 |
| | | 1000-3000 | 11-58 | 12-18 | 12 78 |
| | | 7000-3000 | 10-92 | 11-46 | 12-06 |
| | | свыше | 10-62 | 11-16 | 11-76 |
| Лампы натриевые высокого давления | | | | | |
| ДНаС 210 Вт | шт | до 250 | 11-82 | 12-42 | |
| | | 250-1000 | 11-58 | 12-18 | |
| | | свыше | 11-28 | 11-82 | |
| ДНаТ 100 Вт | шт | | 10-14 | | |
| Лампы накаливания кварцевые галогенные | | | | | |
| КГМ 12х60 Вт | шт | | 1-20 | | |
| АКГ 12х75 Вт | шт | | 4-50 | | |
| Светильник ПРУ | шт. | | 40-26 | | |
| Стартеры 220 В | шт. | 1-1000 | 0-48 | 0-54 | |
| | | 1000-5000 | 0-42 | 0-48 | |
| | | свыше | 0-36 | 0-42 | |
| Щетка "Полтавчанка" | | 1-3000 | 1-20 | | |
| | | 3000-10000 | 1-14 | | |
| | | свыше | 1-08 | | |
| Дорожная" | | 1-3000 | 1-08 | | |
| | | 3000-10000 | 1-02 | | |
| | | свыше | 0-96 | | |
| "Театральная" | | 1-3000 | 0-84 | | |
| | | 3000-10000 | 0-78 | | |
| | | свыше | 0-78 | | |
| Кружка сувенирная | | | 0-78 | | |

тел 66-49-90 Шмыгло Тамара Григорьевна

SAMPLE COPY

# ЭНЕРГОСБЕРЕГАЮЩИЕ ЭЛЕКТРОННЫЕ БАЛЛАСТЫ ДЛЯ ЛАМП НАРУЖНОГО ОСВЕЩЕНИЯ ТИПА ДНАТ ИЛИ ДРЛ


**УКРАИНА**

*фирма* **ИНТЕРФЕЙС**

**(ОБЩЕСТВО С ОГРАНИЧЕННОЙ ОТВЕТСТВЕННОСТЬЮ)**

Идентификационный код [illegible] Украина [illegible] Украина [illegible] 36[illegible] [illegible]
[illegible] 24 [illegible] 263-93


Предлагает Вам электронные балласты вместо электромагнитных, что позволит

- уменьшить потребление электроэнергии на 20-30 %,
- увеличить срок службы ламп
- уменьшить вес светильников,
- иметь в балласте уже встроенное зажигающее устройство,
- дать возможность использования как для ртутных, так и для натриевых ламп
- обеспечить высокую надежность и долговечность эксплуатации с натриевыми лампами, что позволит постепенно заменить ртутные лампы на натриевые и получить экологично оздоровляющей среды
- отпадет необходимость установки компенсационных конденсаторов,
- [illegible] при пониженном напряжении 190 В

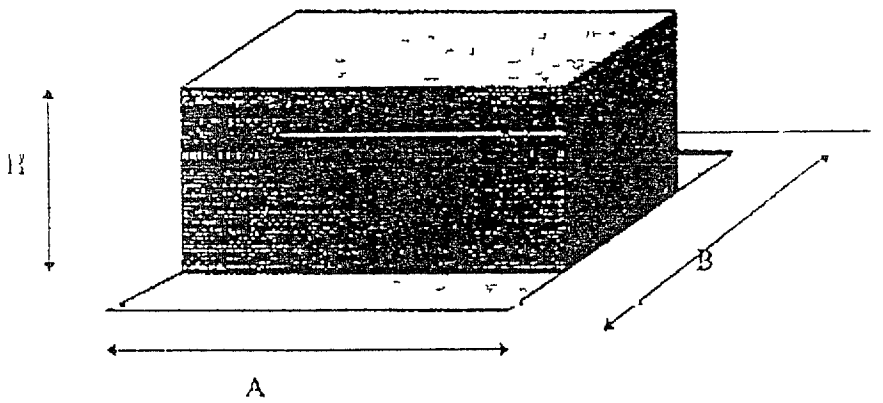


Характеристика технических параметров для ЭтПРА ламп наружного освещения

| Характеристики | ЭтПРА-70 Вт | ЭтПРА-100 Вт | ЭтПРА-150 Вт | ЭтПРА-250 В | ЭтПРА-400 Вт |
|---|---|---|---|---|---|
| Тип лампы | ДНАТ-70 ДРЛ-70 | ДНАТ 100 ДРЛ 125 | ДНАТ-150 | ДНАТ-250 ДРЛ-250 | ДНАТ-400 ДРЛ-400 |
| Мощность Вт | 70 | 100 | 150 | 250 | 400 |
| Напряжение питания В | 190-242 | 190-242 | 190-242 | 190-242 | 190-242 |
| Рабочая частота балласта кГц | 30 +10 % | 30 +10 % | 30 +10 % | 30 +10 % | 30 +10 % |
| Температура окружающей среды С | от -40 до +50 | от -40 до +50 | от -40 до +50 | от -40 до +50 | от -40 до +50 |
| Габаритные размеры мм | 120x70x50 | 140x90x50 | 140x95x55 | 160x100x60 | 180x110x70 |
| Вес кг | 0,5 | 0,8 | 0,9 | 1,2 | 1 |
| Цена в $ США без НДС | 18 | 24 | 26 | 30 | 38 |

BEST AVAILABLE COPY

*Продолжение*

| Шифр по ОКП | Серия тип марка | Наименование рытная техническая характеристика исполнение го условиям эксплуатации |
|---|---|---|

## ЛАМПЫ ВЫСОКОГО ДАВЛЕНИЯ ТИПА ДНаТ

Лампы дуговые натриевые высокого давления предназначены для общего освещения закрытых помещений, где не требуется высокого качества цветопередачи, а также для использования в светильниках наружного освещения. Число после типа — отличительная особенность от базовой модели

| Мощность Вт | Разо чи ок А | Напряжение на лампе В | Номинальный световой поток лм | Номинальный диаметр | Длина мм | Номинальная продолжительность горения ч |
|---|---|---|---|---|---|---|
| 34 6752 2115 18 ДНаТ 400 6 | 400 | 4 6 | 28 | 47500 | 45 | 278 | 12000 |
| 34 6752 1117 81 ДНаТ 250 6 | 250 | 3 8 | 120 | 22000 | 48 | 250 | 10000 |
| 34 6752 1118 90 ДНаТ 250 7 | 250 | 3 8 | 120 | 24000 | 48 | 250 | 10000 |
| 34 6752 1116 82 ДНаТ 150 1 | 150 | 1 8 | 110 | 14000 | 48 | 211 | 6000 |
| 34 6751 2106 85 ДНаТ 100 3 | 100 | 1 2 | 110 | 9000 | 42 | 165 | 6000 |
| 34 6751 2111 88 ДНаТ 100 3С | 100 | 1 2 | 110 | 7000 | 42 | 165 | 6000 |
| 34 675 ДНаС 210 | 210 | 2 25 | 130 | 17000 | 91 | 228 | 6000 |

Со светорассеивающим эффектом

## ЛАМПЫ НАКАЛИВАНИЯ ГАЛОГЕННЫЕ МАЛОГАБАРИТНЫЕ

Предназначены для работы в качестве источника света в светильниках, работающих от сети постоянного или переменного тока частотой 50 или 60 Гц, номинальное напряжение в вольтах — 12, номинальная мощность в ваттах 20 60. Цифры и буквы в условном обозначении этого типа ламп означают:
К — кварцевая Г — галогенная М — малогабаритная.
Лампы включаются в сеть через устройство, понижающее напряжение

| | Номинальные величины | | | | | Предельные величины | |
|---|---|---|---|---|---|---|---|
| | Напряжение В | Мощность Вт | Световой поток лм | Диаметр мм | Длина мм | Мощность Вт не более | Световой поток лм не менее |
| КГМ 12 60 | 12 | 60 | 1000 | 13 5 | 41 | 67 8 | 900 |
| КМ 12 20 | 12 | 20 | 350 | 11 | 32 | 21 3 | 315 |

## СТАРТЕРЫ ДЛЯ ЛЮМИНЕСЦЕНТНЫХ ЛАМП

34 6922 0047 63 Стартеры — 8П С 220 1

Предназначены для зажигания энергосберегающих ламп (люминесцентных) мощностью 36 55 Вт а также ламп 13 30 40 65 80 Вт
Стартеры обеспечивают зажигание люминесцентных ламп в течение 8 с при номинальном напряжении сети.
Значение импульса напряжения во время размыкания контактов стартера должно быть не менее 800 В в одном из полупериодов
Число зажиганий ламп при помощи стартеров 8П С 220 1 должно быть не менее 6000

BEST AVAILABLE COPY

# Лампы газоразрядные
# Лампы натриевые высокого давления SON - PLUS

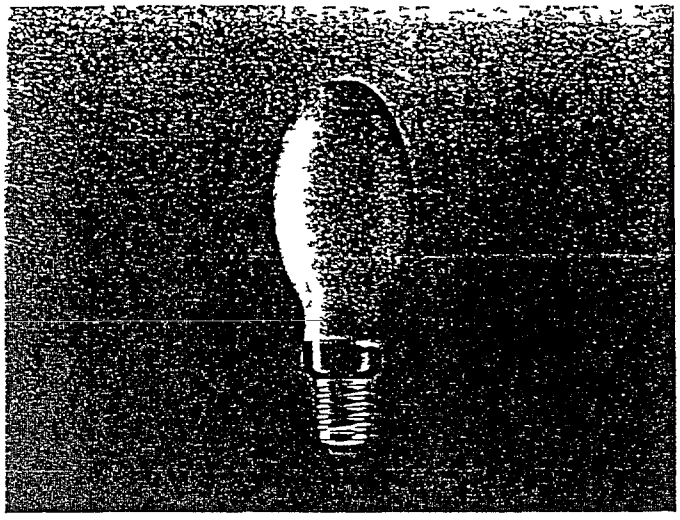

Современная газоразрядная лампа

- ☐ Приятный теплый белый цвет света коэффициент цветопередачи Ra 25 (группа 4)
- ☐ Высокая светоотдача (до 140 лм/Вт)
- ☐ Достаточное различие цветов длительный срок службы произвольная позиция свечения
- ☐ Лампа эллипсоидной формы с внутренним опаловым покрытием
- ☐ Эксплуатация с устройством зажигания

Применение
для освещения общественных дорог автострад контейнерных терминалов аэропортов цехов промышленных предприятий и спортивных объектов

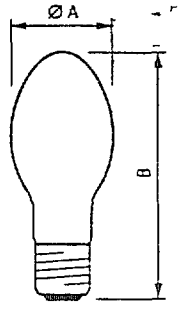


1

| Мощн Вт | 100 | 150 | 250 | 400 |
|---|---|---|---|---|
| A мм | 76 | 91 | 91 | 121 5 |
| B мм | 186 | 226 | 226 | 290 |

SON PLUS 250 W

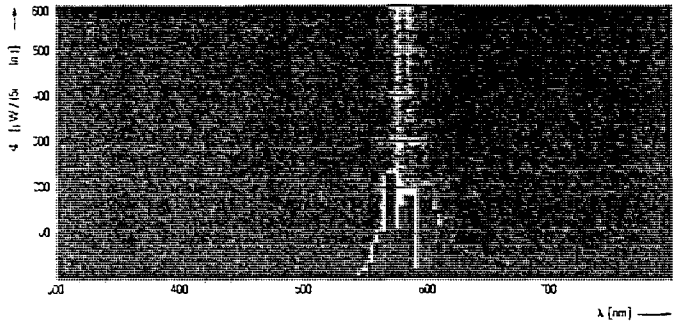


| Тип | SON PLUS 100W | SON PLUS 150W | SON PLUS 250W | SON PLUS 400W |
|---|---|---|---|---|
| Рисунок | 1 | 1 | 1 | 1 |
| Мощность Вт | 100 | 152 | 260 | 400 |
| Ток в лампе А | 1 20 | 1 80 | 2 85 | 4 30 |
| Световой поток лм | 10 000 | 16 000 | 30 500 | 54 000 |
| Светоотдача лампы лм/Вт | 100 | 105 | 117 | 135 |
| Полное потребление мощности Вт | 114 | 171 | 286 | 431 |
| Светоотдача системы лм/Вт | 88 | 94 | 107 | 125 |
| Цвет света | C | C | C | C |
| Цветопередача (группа) | 4 | 4 | 4 | 4 |
| Позиция свечения | Произвольная | Произвольная | Произвольная | Произвольная |
| Возможность регулировки яркости | Есть | Есть | Есть | Есть |
| Цоколь | E40 | E40 | E40 | E40 |
| Конденсатор компенсационный мкФ | 12 | 18 | 32 | 50 |
| Допустимый диапазон напряжения ± % | 5 | 5 | 5 | 5 |
| Рекомендуемый балласт | BSN100L33 | BSN150L33 | BSN250L33 | BSN400L33 |
| Рекомендуемое устройство зажигания | SN58/SN58T5/SU20S | SN58/SN58T5/SU20S | SN58/SN58T5 | SN58/SN58T5 |
| Номер схемы соединения (см стр 178/180) | 3/5 | 3/5 | 3 | 3 |
| Масса г | 105 | 180 | 180 | 250 |
| Упаковка шт | 12 | 2 | 12 | 6 |
| EAN 8711 500 | 182238 | 182289 | 193445 | 193452 |

PHILIPS

101

109

# Национальная Академия Наук Украины
## Институт газа

# ГАЗОВЫЕ ТРУБЧАТЫЕ РАДИАЦИОННЫЕ НАГРЕВАТЕЛИ ДЛЯ ОБОГРЕВА ПРОИЗВОДСТВЕННЫХ ПОМЕЩЕНИЙ

Институтом газа Национальной Академии наук создан энергосберегающий экологически чистый низкотемпературный газовый трубчатый радиационный нагреватель для обогрева производственных помещений /цеха, мастерские, гаражи, ангары, спортзалы, склады, теплицы, птичники, фермы и др / Нагреватель подвешивается у потолка помещений, откуда излучает тепловую энергию в направлении пола В результате в помещении достигается экологическая чистота и температурный комфорт на рабочих местах при минимальных затратах энергоносителя Общий вид нагревателя показан на рисунке

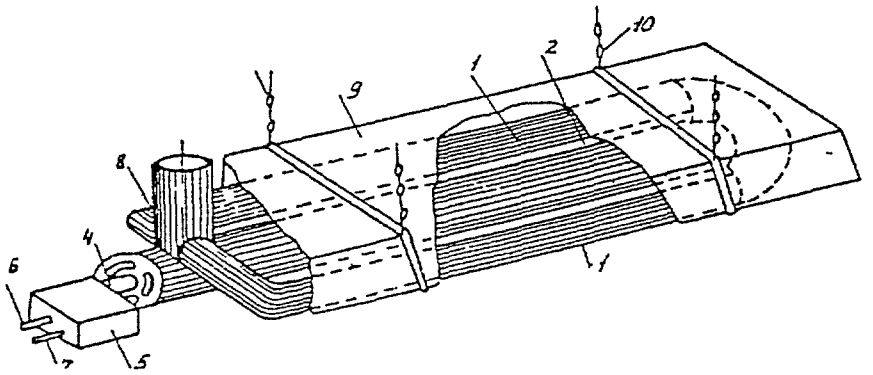


1 Боковая ветвь корпуса нагревателя,
2 Центральная ветвь корпуса нагревателя,
4 Горелка,
5 Узел автоматики,
6 Подвод газа
7 Электрозапальник
8 Дымовой патрубок,
9 Отражательный экран,
10 Цепная подвеска

## ОСНОВНЫЕ ХАРАКТЕРИСТИКИ НАГРЕВАТЕЛЯ

- Топливо - природный газ, пропан-бутан
- Рабочее давление газа перед нагревателем - 3,0-4,0 КПа
- Коэффициент использования топлива - 93-95%
- Тепловая мощность нагревателя - 15-45 кВт
- Площадь обогрева одним трубчатым нагревателем 15 кВт-140м$^2$, 30 кВт-270 м$^2$, 45 кВт-400м$^2$
- Стоимость трубчатого нагревателя - $450-500
- Вес нагревателя - 45-140 кг
- Управление тепловой работой нагревателя - автоматическое

**ПРЕИМУЩЕСТВА** обогрева производственных помещений газовыми трубчатыми радиационными нагревателями по сравнению с традиционными водяным, паровым и другим обогревом

- Достигается экономия топлива в 2,0-2,5 раза,
- Уменьшается металлоемкость в 1,5-2,0 раза,
- Достигается прогрев помещения за 8-10 мин /эффект солнца/,
- Исключается замораживание системы отопления /вода отсутствует/,
- Исключается использование котельных,
- Улучшаются экологические и теплокомфортные условия на рабочих местах,
- Не занимают полезную площадь помещений, нагреватели /система/ подвешиваются у потолка, их незначительный вес не нарушает статику строительных конструкций

**Адрес 252113, г Киев, ул Дегтяревская, 39, Институт газа НАН Украины**
**Контактные телефоны /044/ 446-58-13, 446-50-71 Факс /044/ 446-88-30**

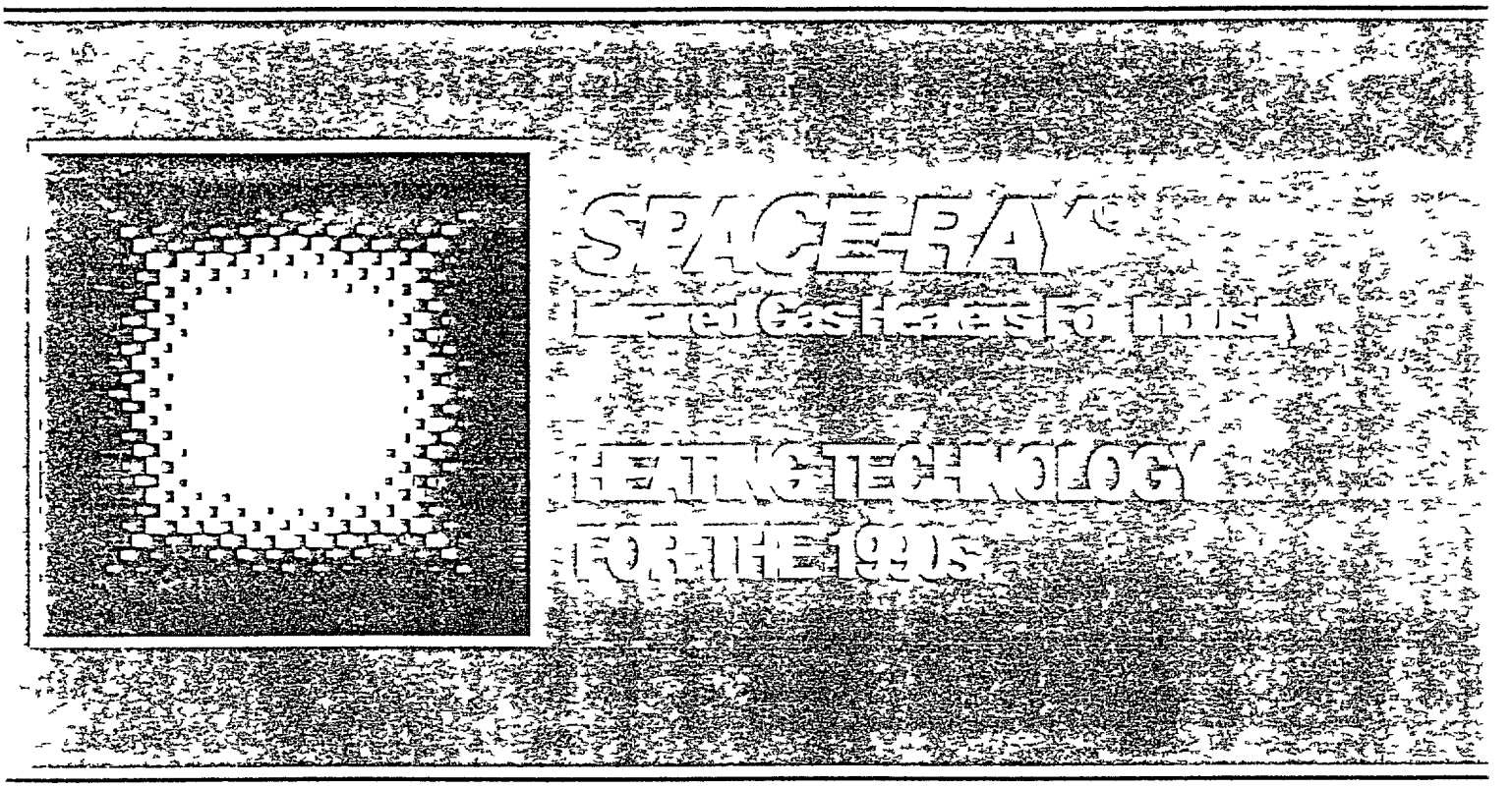


# SLASH HEATING COSTS
## BY UP TO 50%

### A TRUSTED NAME IN INFRARED HEATING

At Space Ray, industrial comfort heating is a challenge we take seriously We have been manufacturing gas fired infra red heating systems since 1958 The quality and perfor mance of our heaters are based on over 30 years of field experience and exposure to industrial heating problems Our reputation is built upon a solid track record for providing highly radiant efficient easy to install and high quality infrared heating equipment

When you specify Space-Ray you are investing in an uncompromised commitment to product performance and reliability We take pride in our entire family of infrared heaters and our commitment to quality standards in the design manufacture and per formance of Space-Ray heaters – heaters with low maintenance at a competitive price and a proven record for long life In fact some heaters are still providing trouble-free operation after 29 years of service

### HEATING TECHNOLOGY FOR THE 90's

Infrared heating is quickly becoming the preferred alternative to traditional forced air heating Every year more and more consulting engineers plant engineers and contractors are specifying infrared heating as a cost efficient alternative to forced air heating systems The bottom line has been and remains energy cost savings

Forced air heating is costly Why? Because it must first heat almost all of the air in your building before a level of comfort is achieved And because heated air rises large amounts of costly electrical energy is expended to drive the warm air down to floor level With radiant infrared heat, it is the heat energy itself that warms people floor slabs machines and other objects at floor level The princ ple of radiant infrared heat is very similar to the sun s heat-energy warming the sur face of the earth out not the upper atmosphere

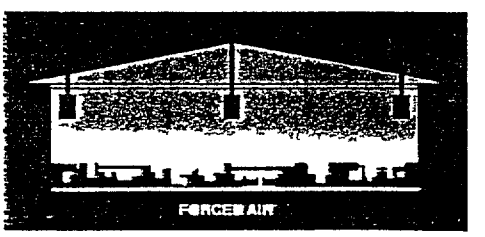


Forced air works from the top down heating the air first and stratifying from the ceiling downward More heat is wasted in upper area of building

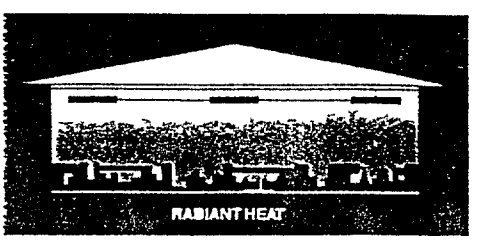


Radiant heat works from the bottom up warming people floors and machines first Comfortable heat is retained in lower working area of your building

### 30 – 50% FUEL SAVINGS

High radiant efficient Space-Ray infrared heating systems can save a building owner 30 to 50% in an nual fuel costs when compared to forced air heating systems Some Space-Ray customers report less than a one year payback on their energy efficient infrared heating systems And, with a Space Ray system your investment payback accrues not only from reduced en ergy costs but from reduced main tenance costs too

# SPACE-RAY® INFRARED TUBE HEATERS

Space Ray offers tube heaters in natural or propane gas which range in capacity from 40 000 to 175 000 BTU/Hr giving us one of the most complete lines in the industry

All Space-Ray tube heaters are designed for maximum radiant output and are AGA and CGA design certified The products of combustion are pulled through the totally enclosed combustion chamber for increased radiant efficiency more uniform tube temperature and greater safety The 16 gauge aluminized steel emitter tube is calorized to produce a tube that is highly radiant absorptive on the interior and highly radiant emissive on the exterior – will not flake or peel and is corrosion resistant In addition the ends of the aluminum reflectors are enclosed for maximum radiant heat output and minimum convection loss

The heaters unitized design allows lower installation costs simpler re arrangement within the facility and less maintenance The heaters may be direct vented (individually or common vented) or indirect vented (unvented) The draft inducer is equipped with a permanently lubricated totally enclosed fan cooled and heavy duty ball bearing motor for maintenance-free operation

Other features include a monitoring light system for on line diagnosis a one-piece cast iron burner with stainless steel flame retainer a diaphragm air switch a state of the art redundant combination gas valve for quieter ignition and added safety a direct spark ignition system with 100% gas shut off safety control in the event of flame failure and inside or outside air for combustion

## LTS SERIES TUBE HEATERS

A line of 14 unitized straight tube heaters with more than 26 different configurations offers optimum flexibility in custom designing an infrared heating system Ranging in capacity from 40 000 to 160 000 BTU/Hr these heaters are from 20 to 50 long and may be used in straight L shape U shape or Z-shape configurations For added versatility 90 degree elbows and corner reflectors are available on most of the units for close area mounting near walls doors or corners

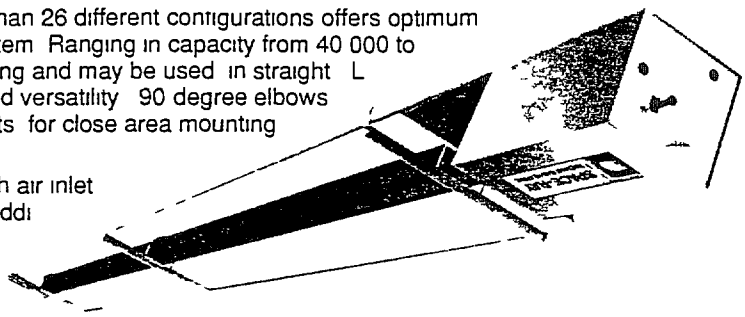

The LTS series is design certified for up to 50 of fresh air inlet duct and up to 75 of horizontal sidewall venting In addition the LTS series is certified for a unique incline mount which allows the heaters to be mounted following the contour of the roof for maximum space utilization

## LTU SERIES TUBE HEATERS

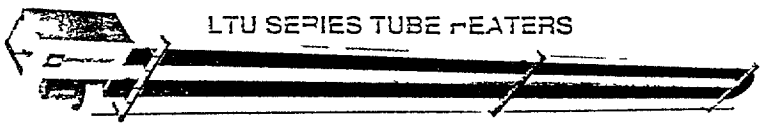

This line of 16 unitized low intensity u tube heaters ranges in capacity from 40 000 to 160 000 BTU/Hr and in total heater length of 17 to 22 5 providing optimum flexibility to meet exact industrial or commercial building heating requirements The u tube configuration of these heaters offers a large radiating surface for more uniform heat distribution at the floor level

These models are especially suited for lower mounting heights and may be mounted horizontally or up to an angle of 45° In addition the self contained draft inducer can be rotated up to 90° adding to the installation flexibility

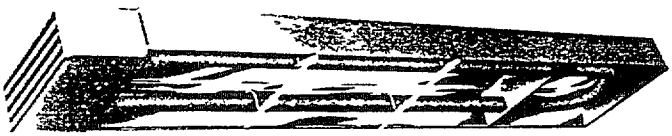

## RSTP SERIES TUBE HEATERS

This series meets a wide range of comfort heating needs indoors or outdoors Available in capacities of 100 000 150 000 and 175 000 BTU/Hr these compact heaters are **completely** factory assembled and may be mounted at various heights horizontally or up to an angle of 90°

These powerful units incorporate many of the features standard for other Space Ray tube heaters and are especially suited for higher mounting heights

*Ask about Space-Ray's® COMPUHEAT® program*

Space-Ray's exclusive COMPUHEAT® heat loss analysis program is a first step when designing an effective and cost efficient solution to your building's heating needs COMPUHEAT® recommendations include the number of heaters required to satisfy the design heat load as well as estimated annual fuel costs for your payback analysis Call us for a free no obligation COMPUHEAT® heat loss analysis We'll have our nearest representative contact you to review your heating needs and conduct a professional survey of your facility

SPACE RAY
A Division of Gas-Fired Products Inc
P O Box 36485 Charlotte NC 28236

Telephone (Toll Free) 800 438 4936 In NC 800 432 7734
Fax 704 332 5843

DISTRIBUTED BY

© Copyright 1990 GFP INC 69520M

FORM # S71000

112

Reprinted from *Air Conditioning Heating & Refrigeration News* September 7 1987

# Principles of gas-fired infrared heating

*by Bob Genisol*

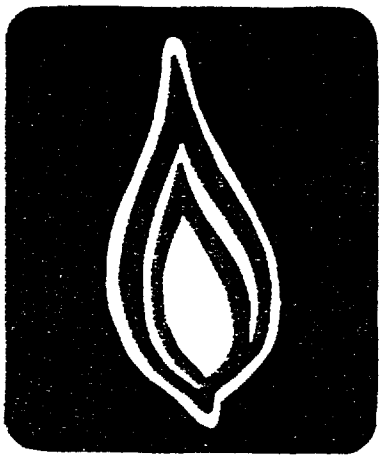

## HEATING IMPACT REPORT

CHARLOTTE N C — In planning for or renovating an industrial or commercial building making the right decision in a heating system could make the difference of hundreds of thousands of dollars during the lifespan of the building

Many structures are heated with electricity steam or forced air heating systems Others are heated with gas fired infrared systems

It has been proven that the installation of infrared heating systems can save the building owner up to 50% of the heating costs over a one-year period when compared to forced-air heat. Many successful infrared heating system applications include warehouses auto sales and service agencies farm buildings greenhouses truck garages and terminals airplane hangars fire stations, gymnasiums tennis courts, and loading docks, to name just a few

In addition employee welfare can be improved because the heat is more evenly distributed from the floor up In a manufacturing environment this can result in increased productivity

### What is infrared?

Infrared is a form of radiation that closely resembles and behaves as light energy Both infrared and light energy are carried from a source to an object by wave motion The major difference between them is source temperature and the fact that the human eye cannot see low temperature infrared energy

Infrared follows the principle of electromagnetics It forms a small portion of the electromagnetic spectrum located between visible light and the top end of the radar and microwave portion of the electronic spectrum

Because infrared is similar to light energy it follows the same laws of optics. It radiates in all directions from a point source, travels in a straight line at the speed of light (186 000 miles/second) and can be polarized focused or reflected the same as light

Upon striking an object infrared energy causes the molecular particles on the surface to react This generates heat which is then transferred through the object being heated by conduction The object becomes a radiant emitter but at a much lower temperature and intensity

### Types of infrared

Depending on wavelength the infrared section of the electromagnetic spectrum can be classified in three distinct areas Near middle and far infrared Temperature range and wavelength of the three types are detailed in Table 1

| Type | Temperature range (F°) | Wavelength range (microns) |
|---|---|---|
| Near infrared | 6 000 — 3 000° | 0 8 — 1 5 |
| Middle infrared | 3 000 — 500° | 1 5 — 5 5 |
| Far infrared | 500 — (460°) | 5 5 — 50 + |

Table 1

Figure 1 shows the electromagnetic spectrum and the location of infrared radiation within the spectrum Every object at temperatures above absolute zero will give off infrared energy The temperature emitter area and emissivity will determine the amount given off

It has been determined that an object heated to 1 700°F generates infrared energy in the 0 75 to 20 micron range and peaks at 2 41 microns Infrared energy with wavelengths of less than 0 8 microns is actually visible light Heating an object to a higher temperature will generate more infrared energy and in the process also generates a greater percentage of visible light which contributes little toward comfort heating

### Heating principles

Infrared directly heats people floor walls and other surfaces without heating the air first Upon striking an object or a floor slab the infrared energy is converted to heat The floor slab then becomes a giant low temperature radiant emitter

Machinery and equipment at the floor level are warmed by direct radiation as well as conduction through contact with the floor slab The temperature differential is the driving force and determines the rate of radiant energy transfer In many installations the floor slab temperature will be five to ten degrees higher than the ambient air temperature

Convection heat transfer from the warm floor slab and machinery to the cool air

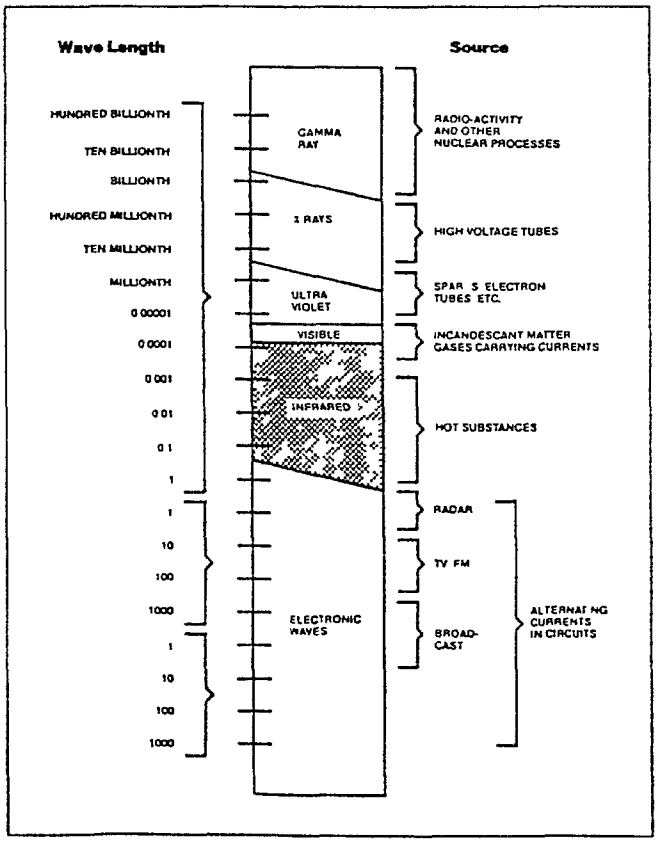


**FIGURE 1 — Electromagnetic spectrum**

lying at floor level also plays an important role in the heating process The cool air sweeping across the floor picks up the convected warm air and rises within the building structure Warm air is displaced by cooler air in a continuous cycle gradually raising air temperature in the building to a comfortable level

### Radiant output concept

The radiant output of a gas infrared heater is given in the following equation

$$R = SEA (T^4 - T^4_a)$$

Where

R = radiant output
S = Stefan Boltzman constant
E = emissivity of radiating surface
A = surface area
T = emitter surface temperature in °R
$T_a$ = ambient temperature °R

The major variables affecting the heater s radiant output include the emissivity of the radiating surface and the emitter surface temperature Materials with emissivities of close to 0 99 are highly desirable

The temperature of the emitter surface also plays an important role in radiant heating The temperature is expressed in °Rankine and raised to its fourth power Any increase in surface temperature greatly increases the radiant output of the gas fired radiant heater

### Infrared heater types

Gas fired infrared heaters are classified according to emitter material and emitter surface temperatures

There are basically three types of gas fired infrared heaters Ceramic heaters tube heaters and broad area and floor model infrared heaters made of perforated steel emitters (see Figure 2)

Designed to operate in the 1 650° to 1 800° range ceramic heaters have a porous ceramic emitter surface Combustion takes place on the ceramic surface with the products of combustion released into the building Polished aluminum reflectors focus infrared rays onto the floor Shallow reflectors spread the infrared rays to a broader area and deeper parabolic reflectors concentrate rays in a narrow area

The second type of gas fired infrared heaters tube heaters use steel tubing where the hot gases are either pulled or pushed through the tube The tubing is either calorized or painted to increase the emissivity of the tube material

Tube heaters currently available operate at average emitter temperatures of from as low as 450° to as high as 1 000°F and include both vented and unvented versions Designs vary from ready mount unitized systems requiring little field assembly time to continuous systems requiring substantial field assembly time

A third type of infrared heater includes the broad area and floor models These heaters have perforated stainless steel emitters for durability and increased life Broad area heaters radiate low intensity heat in a 360° pattern for wide coverage The perforated stainless steel emitter is conical in shape with emitter surface temperatures ranging from 1 350° to 1 450°F

The floor model infrared heaters also have perforated stainless steel emitters which are formed into a vertical rather than conical cylinder These units are designed primarily for spot heating and/or warming stations

### Infrared versus forced air systems

The major difference between gas-fired infrared heating systems and forced air systems is the method used to create a comfortable heating environment

Gas fired infrared units heat the floor slab and machinery before heating the air This results in a more comfortable heating environment because people working in the comfort zone are blanketed by direct radiation from above secondary radiation from below and warm air rising from the floor

In a forced air system the hot air rises to the ceiling and stratifies gradually working its way down to the thermostat level The floor slab usually never becomes warm enough to be comfortable

In fact in many instances buildings heated with forced hot air have a high temperature differential between the floor and ceiling The ceiling area of a high bay building can be easily 30° to 40° warmer than the floor area

In the same type of building heated with an infrared system the temperature is much more uniform It is not uncommon to find a high bay building heated with infrared where the ceiling temperature is at a slightly lower temperature than the floor slab

In essence a forced air system heats from the top down making the floor area the last and most difficult to heat In comparison an infrared system heats from the floor up satisfying the comfort zone first Due to the differences in these operating principles infrared systems normally save 30% to 50% over forced air heating systems depending on the installation and application

*Bob Genisol is product manager for Space Ray a Division of Gas Fired Products Inc Charlotte N C*

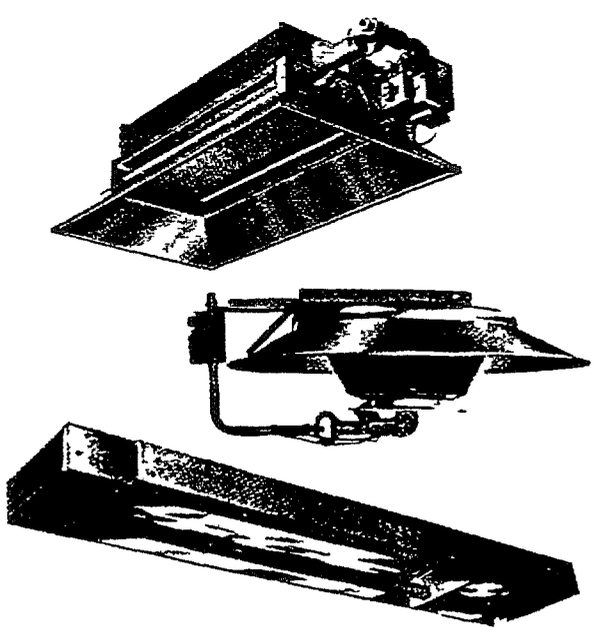

**FIGURE 2 — Typical infrared heaters**

# Automotive Parts Distribution Center Saves With Space-Ray Infrared Heating System

☐ Annual heating costs average 12¢/sq ft

MANSFIELD MA—A perimeter design using gas fired infrared heaters from Space-Ray Charlotte N C has resulted in significantly lower annual fuel costs for a large automotive parts distribution center located in Mansfield MA According to figures provided by the Chrysler Corporation and the natural gas supplier Bay State Gas Company the average fuel costs for the 215 000 square foot warehouse and office complex are approximately 12 cents per square foot a savings of 8 to 13 cents or up to 50% or more when compared to heating costs for a similar type warehouse in the area Total annual energy costs are between $26 635 to $28 302 a year depending on the severity of the winter which is considerably less than energy costs for a comparable structure

The Space Ray heating system was installed in the newly-constructed 336 foot by 576 foot Chrysler Corporation warehouse training and parts facility in 1989 The perimeter design consists of 28 infrared heaters strategically placed in the large warehouse structure Instead of one temperature control for the whole system the Space-Ray system was designed with individual controls for groups of up to three heaters for maximum zone comfort

The perimeter heating system is a unique design feature offered by Space-Ray for larger facilities such as the Chrysler Parts Distribution Center' noted Bob Genisol Product Manager for Space-Ray This particular design has resulted in significantly lower fuel costs compared with other area warehouse facilities of this size Return on investment in terms of total energy savings is also faster and heating comfort is much more uniform

Heating consultant for the Mansfield job was the Condon Company of Shrewsbury MA Anderson Nichols and Co of Boston MA provided the architectural and engineering design services Marshall Contractors of Rumsfield R I was the general contractor

To heat the new warehouse Terry Condon President of the Condon Company specified a total of eight RSTP 17 vented gas fired infrared heaters each with a 175 000 BTU/Hr capacity three RSTP-10 infrared tube heaters each with a 100 000 BTU/Hr capacity and 14 LTU-75 unitized low intensity infrared tube heaters each with a 75 000 BTU/Hr capacity Total capacity of the entire warehouse heating system was 2 750 000 BTU/Hr According to Condon this is 40 percent less input than a comparable system to do the same job

*An interior view of Chrysler Parts Distribution Center showing several of the Space-Ray RSTPI7 tube heaters Infrared tube heaters are installed 29 feet above the floor*

Space-Ray s free and unique COMPUHEAT® computerized heat loss analysis was conducted by Condon Company for Anderson-Nichols before installation of the system to determine optimum heater selection and approximate fuel cost for the system compared to other systems in similar warehouses in the area Besides the warehouse the facility also includes another 25 000 square feet of office area and a paint storage area These two areas are not heated by the Space Ray system

## Building Described

The Mansfield facility is a concrete slab structure with standard membrane type roof construction It consists of concrete walls with up to 2 5 inches of insulation and metal deck roof

For receiving and outgoing shipments the facility has 18 loading dock doors that are from 12 to 16 feet high and 10 to 12 feet wide The doors open and close all day and are used for rail and truck deliveries of parts for the company s East Coast parts distribution system A training area is also located at one end of the facility for on going employee training The rest of the area consists of racks for storing parts

Currently 40 employees work within the

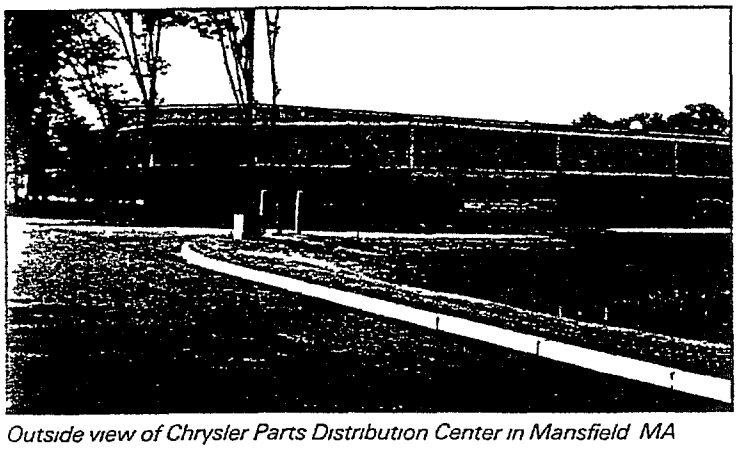

*Outside view of Chrysler Parts Distribution Center in Mansfield MA*

warehouse with another 100 employees in the attached office complex Average heating temperature at the loading dock area is 68°F with overall temperature control in the warehouse set at between 68° to 70°F Heaters are used from September to April

"The client became interested in infrared gas heaters based on results we achieved at the nearby Nissan Motor Corporation auto parts facility we built in the same office complex and outfitted with a competitive gas fired radiant heating system three years earlier," noted Condon Chrysler insisted on an infrared radiant gas heating system and wanted us to not only update ourselves on the systems available but recommend the most economic system available for their plant"

Condon noted that Chrysler eventually chose the Space-Ray system over competitive systems because of its simpler design higher radiant efficiency, minimum maintenance and lower first cost

None of us knew that Space-Ray would be that much more superior to the previous system we used," Condon noted "We were used to seeing a tail pipe along the building perimeter and questioned Space-Ray on the efficiency of their system when we found that this was not included

### Perimeter Heating System

Space Ray s infrared heaters were mounted 5 feet from the loading dock doors and hung from steel trusses four feet from the 33 foot high ceiling All were mounted at 15° angles for maximum warmth and comfort All areas were also designed with individual temperature controls for optimum efficiency and heating comfort Each Space-Ray heater also includes monitoring lights for on-line diagnosis and simple easy maintenance

On the South side of the building three Space-Ray RSTP-10 infrared tube heaters were installed directly behind the rail loading dock doors Eight RSTP 17 infrared tube heaters were mounted in groups of two to three over 15 of the truck delivery loading dock doors Four Space-Ray's LTU heaters were used on the middle of the building and on the East side above the service training area No heaters were used on the East side of the building where paint storage bins were located Ten of the LTU-75 heaters were mounted on the North side and grouped three or four heaters for zone at the parts bin areas Each group of two or three heaters had their own individual temperature control

Condon noted that the Space-Ray heaters were easier to install and maintain compared to the competitive system he used previously which was not unitized

With the other system if one of the unit s vacuum pumps became defective the whole system shut down" Condon noted "This was not the case with Space Ray where a defective unit will not cause the whole system to shut down Installation was simple since all Space-Ray heaters are unitized and factory shipped as complete units, with only a few bolts usually necessary for mounting

Condon noted that the cost of the Space-Ray system was 40 to 50 percent less than the competitive system he previously recommended Once installed and considering labor cost actual savings increased to over 50% compared to the competitive system he noted

Based on four years heating experience the system has also proved to be more efficient The input firing range of the Space Ray system averages 16 BTU/sq ft compared to 25 to 30 BTU/sq ft for conventional heating systems Considering that we need about 40% less BTU/Hr input to begin with to maintain the same heating comfort annual savings with this feature is significant

Condon also noted that the client feels that the comfort level of the Space-Ray system is much more efficient than other systems they are familiar with "They are very pleased with the uniform heating coverage provided by the Space-Ray system Optimum warmth and comfort has been maintained for the employees during the past four winter heating seasons"

According to Condon Kevin Kelley Maintenance Supervisor for Chrysler Corporation was concerned when they first moved into the building He was concerned because the previous building was so uncomfortable and was sure the small number of Space-Ray units would not heat the warehouse" Condon noted He became pleasantly surprised and pleased with the comfort throughout the building once the heaters were installed from end to end and side to side Even between the racks the temperature was consistent Not only that but Chrysler has not experienced any service problems with the heaters in four heating seasons'

Condon added that Chrysler is extremely satisfied with the units and their clean, efficient and quiet operation "We are currently specifying a Space-Ray system for another Chrysler warehouse facility' he noted

### Heating Units Described

The Space-Ray RSTP 17 infrared tube heater operates at tube temperature averaging between 900°F and 1000°F The unique individualized unitized design of the unit provides lower installation costs simpler rearrangement within the facility to other locations if necessary and less maintenance Especially suited for installations with low ceiling heights the LTU low intensity tube heater comes with a self contained draft inducer and factory assembled calorized-aluminized steel tube and reflector body with quick six bolt burner box assembly for easy, on site installation

Unlike forced air heating, which works from the top down infrared gas heating works from the bottom up warming people floors and machines first for optimum comfort in area environments

Space Ray was the first U S manufacturer to design unitized tube heaters over 25 years ago and has over 35 years of field experience and exposure to industrial heating problems The exclusive COMPUHEAT® computer heat loss analysis is also offered free of charge to qualified plant managers contractors and building owners

*Special Thanks to Terry Condon of Condon Co Inc Shrewsbury MA*

1993 GFP Inc Space Ray and COMPUHEAT are registered trademarks of GFP Inc For more information on Space Ray products contact Space-Ray Dept C P O Box 36485 Charlotte NC 28236 or call 1 800 438 4936 Chrysler is registered trademark of Chrysler Corporation Inc This case study does not constitute an endorsement of Space Ray by Chrysler Corporation Inc

SPECIFICATIONS

# SPACE-RAY

Infrared Gas Heaters For Industry Since 1958

## HIGH INTENSITY
# RSCA Series Ceramic Heaters

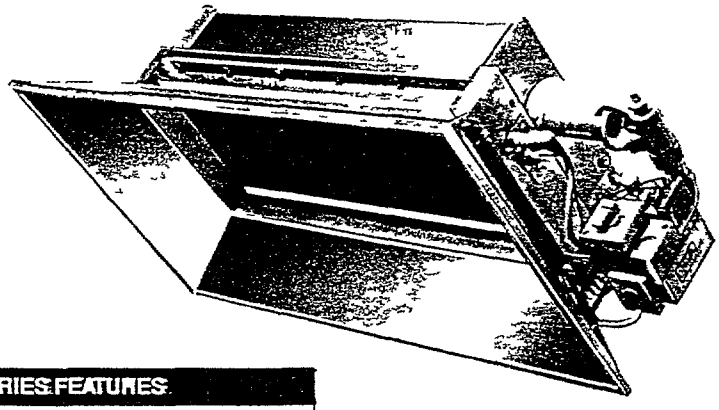

### RSCA SERIES FEATURES

- Highly Radiant Efficient Ceramic Heaters.
- Inputs From 26 000 To 104,000 BTU/Hr
- Suitable For Horizontal Or Angle Mount Up To 45°
- Choice Of Millivolt Standing Pilot And 24 Volt Direct Spark Ignition System Controls.
- All Heaters Are Equipped With 100% Gas Shut-off Safety Control
- Natural Or Propane Gas
- Indirect Vented Operation

10-Year Limited Warranty On Body

10-Year Limited Warranty On Emitter Tiles

10-Year Limited Warranty On Cast Iron Burner

| MODEL | GAS TYPE | INPUT BTUH | BURNER PRESSURE (Water Column) | SUPPLY PRESSURE (Water Column) | | IGNITION TYPE |
|---|---|---|---|---|---|---|
| | | | | MIN | MAX | |
| RSCA3-N1 | NAT | 26 000 | 3 5 | 4 5" | 14' | MILLIVOLT* STANDING PILOT |
| RSCA3 L1 | LP | 26 000 | 10" | 11' | 14 ' | |
| RSCA6-N1 | NAT | 52,000 | 6 | 7' | 14" | |
| RSCA6-L1 | LP | 52 000 | 10 ' | 11" | 14' | |
| RSCA3 N5 | NAT | 26 000 | 3 5" | 4 5" | 14 ' | 24 VOLT** DIRECT SPARK IGNITION |
| RSCA3-L5 | LP | 26 000 | 10" | 11' | 14' | |
| RSCA6-N5 | NAT | 52 000 | 6 ' | 7" | 14 | |
| RSCA6-L5 | LP | 52 000 | 10" | 11" | 14" | |
| RSCA10-N5 | NAT | 104 000 | 6" | 7' | 14 | |
| RSCA10-L5 | LP | 104 000 | 10' | 11' | 14" | |

Millivolt Thermostat and Calibrated Wire Required **120/24 Volt Transformer Furnished 0 4 Amps

### BURNER AND BODY CONSTRUCTION

- Durable Cast Iron Burner For Precision-Crafted Performance And For Proper Combustion
- 10-Year Limited Warranty On Cast Iron Burner
- Stainless Steel Tile Retainer Assembly
- Corrosion Resistant Aluminized Steel Body Construction
- 10-Year Limited Warranty On Body
- Specially Designed Internal Plenum Chamber For Proper Air/Gas Mixture

### EMITTER SURFACE

- Coated High Temperature Emitter Tiles For Higher Radiant Efficiency
- Up To 1800°F Surface Temperature
- Iron Oxide Coating Increases Surface Emissivity By 13%
- 10-Year Limited Warranty On Emitter Tiles
- Incoloy 800 Reverberatory Screen For Secondary Radiating Surface And Additional Safety

### REFLECTOR

- Highly Efficient Aluminum Reflectors
- Double Formed Edges For Rigidity
- Optional Parabolic Extension For Higher Mounting Heights

### OTHER

- Simple Chain Mounting
- Rigid Mounting And Heavy Duty Wall Mounting Bracket Kits Are Available As Accessories
- ½ NPT Female Gas Pipe Connection
- Heaters Can Be Shipped By UPS

## Technical Specifications

| MODEL | RSCA3 | | RSCA6 | | RSCA10 | |
|---|---|---|---|---|---|---|
| MOUNTING HEIGHTS (FEET)* | Standard Reflector | Parabolic Extension | Standard Reflector | Parabolic Extension | Standard Reflector | Parabolic Extension |
| Horizontal | 10 to 16 | 14 to 18 | 12 to 20 | 18 to 26 | 14 to 24 | 22 to 34 |
| 45° angle | 8 to 12 | 12 to 16 | 10 to 16 | 14 to 20 | 12 to 20 | 18 to 24 |

| REQUIRED MINIMUM CLEARANCES TO COMBUSTIBLES (INCHES)** | Horiz. | 45° | Horiz. | 45° | Horiz. | 45° | Horiz. | 45° | Horiz. | 45° | Horiz. | 45° |
|---|---|---|---|---|---|---|---|---|---|---|---|---|
| Back | 24 | 8 | 36 | 12 | 36 | 12 | 36 | 12 | 45 | 18 | 48 | 12 |
| Side | 24 | 24 | 36 | 36 | 30 | 30 | 36 | 36 | 48 | 48 | 60 | 60 |
| Top | 24 | 32 | 36 | 36 | 36 | 36 | 36 | 36 | 36 | 36 | 36 | 36 |
| Below | 48 | 48 | 126 | 126 | 72 | 72 | 126 | 126 | 96 | 96 | 168 | 168 |

| Shipping weight | 30 lbs. | 40 lbs. | 70 lbs. |
|---|---|---|---|

*This chart is intended as a guide only Please consult your local Space-Ray representative for a detailed analysis of your particular radiant heating requirements Observe all required clearances to combustibles as shown **Clearances measured from nearest edge

### RSCA SERIES ARCHITECTURAL/ENGINEERING SHORT FORM SPECIFICATIONS

Gas fired infrared space heaters shall be furnished and installed in accordance with governing codes and as shown per building drawing(s) as described below

Heaters shall be Space-Ray RSCA series ceramic heaters model number(s) RSCA _____ _____ BTU/HR as manufactured by Gas Fired Products Inc Charlotte North Carolina Heaters shall be equipped with a 24V direct spark ignition or millivolt standing pilot system with 100% gas shutoff

Heaters shall be made of aluminized steel body construction and shall have a specially designed internal plenum chamber This chamber shall provide optimum air/gas mixture for complete combustion The carbon monoxide emission level should be 001% based on the maximum allowable emission level of 04%

Heaters shall have a rigid one-piece cast iron burner and an Incoloy 800 Reverberatory Screen The Reverberatory Screen shall increase the overall emissivity of the radiating surface with a blackbody radiation effect and act as a safety net in the unlikely event that the ceramic tile assembly is broken by an outside force The heater s high temperature ceramic emitter surface shall be coated with high emissivity iron-oxide coating which increases the emissivity of the radiating surface by 13% The heater shall be capable of operating at up to 1800°F and shall withstand thermal shock when water quenched

Heaters shall have 48 72% radiant efficiency as determined by ANSI Z83 6 Section 2 9 Radiant coefficient readings shall be obtained with a potassium bromide filter to duplicate the results obtained at American Gas Association Laboratories

Heaters shall operate satisfactorily in any position from horizontal to forty five degrees (45°) from horizontal Heaters shall be Design Certified by the American Gas Association (A G A ) The manufacturer shall provide a written limited warranty of ten (10) years covering the emitter tiles the cast iron burner and body construction and a limited warranty of one (1) year for all components utilized in the heater s control assembly

### SIDE VIEW DIMENSIONS

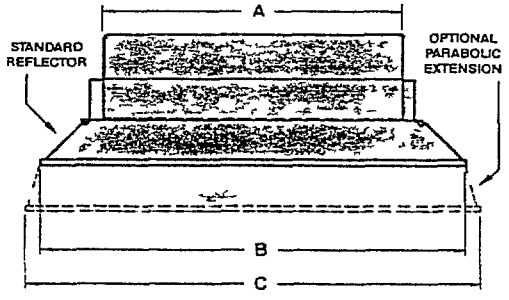


| MODEL | A | B | C |
|---|---|---|---|
| RSCA3 | 10⅞′ | 19 15/16″ | 21 15/16′ |
| RSCA6 | 21 11/16″ | 30⅞″ | 32¾′ |
| RSCA10 | 43⅛″ | 52′ | 54″ |

### END VIEW DIMENSIONS

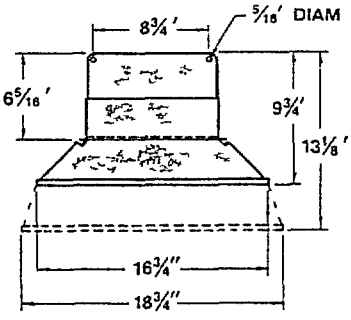


MOUNTING HEIGHT

Space-Ray Ceramic Heaters may be mounted at various heights and angles according to the results desired Please consult your Space-Ray representative for your radiant heating requirements Observe all required clearances to combustibles shown above

COMBUSTION AIR AND VENTILATION

Combustion air and venting requirements for all gas fired heating equipment must be provided per National Fuel Gas Code NFPA54 or the authority having jurisdiction over the installation Indirect vented ceramic heaters require a minimum ventilation flow of 4 CFM per 1000 BTU per hour of total installed heater capacity on natural gas by either gravity or power ventilation (4 18 CFM per 1000 BTU per hour on propane) For more ventilation information consult the ASHRAE handbooks local codes and the Space-Ray Application Manual Building exhaust openings for indirect vented applications must always be located above the level of the heaters Likewise inlet air openings must always be located below the level of the heaters

FOR YOUR SAFETY

OPERATE SPACE RAY INFRARED HEATERS WITH PROPER CARE AND OBSERVE ALL SAFETY PRECAUTIONS Carefully follow the printed installation operation and cleaning instructions furnished with these heaters Follow the instructions on the nameplate of each heater and use in accordance with National State and Local Codes or the authority having jurisdiction Adequate ventilation must always be provided in accordance with the codes


*SPACE-RAY*

A Division of Gas-Fired Products Inc

PO Box 36485 Charlotte NC 28236 Telephone (Toll Free) 1-800-438-4936 (704) 372 3485 Fax (704) 332 5843



opyright 1992 GFP INC 69510M

# APPENDIX D MEASURED AND COLLECTED DATA

BEST AVAILABLE COPY

ЗАТВЕРДЖУЮ
Голова правління АКБ "ЛАЗ"
_____ В. Любець
"_____" _____ 1996р

# П л а н

заходів по економії паливно-енергетичних ресурсів
на 1997 рік

| № п/п | Назва заходу | Термін виконання | Очікувані економії всього за 1996 р. | у тому числі по кварталах I | II | III | IV | Відповідальні за виконан. | Примітки |
|---|---|---|---|---|---|---|---|---|---|
| 1 | 2 | 3 | 4 | 5 | 6 | 7 | 8 | 9 | 10 |
| | I Електроенергія тис. кВт год | | | | | | | | |
| 1 | Компенсація реактивної потужності і зниження втрат за рахунок підвищення нормальної роботи існуючих і встановлення нових конденсаторних установок | 1997р | 30 | 3 | 7 | 10 | 10 | ЕЦ,ЕЛ | |
| 2 | Зниження втрат спожитого повітря /ремонт і заміна запірної арматури, удосконалення схеми постачання стиснутого повітря, відключення компресорних окремих цехів і дільниць в неробочий для них час/ | 1997р | 6 | 4 | 1 | 1 | 1 | цехи, ЕЦ,ЕЛ | |
| 3 | Зменшення перепусків компресорів при локальній роботі окремих цехів чи дільниць | 1997р | 40 | 5 | 15 | 15 | 15 | цехи | |
| 4 | Відключення освітлення цехів в неробочий час /1 т.ч. обідню перерву і перезмінку/ Раціональний режим роботи зовнішнього освітлення | 1997р | 70 | 10 | 5 | 5 | 5 | цехи,ЕЦ | |
| 5 | Ремонт і чистка світильників | 1997р | 10 | 1 | 1 | 1 | 1 | цехи | |
| 6 | Відключення світильників установок неробочий час /1 т.ч. перезмінку і обідню перерву/ | 1997р | 70 | 5 | 5 | 5 | 5 | цехи | |
| 7 | Відключення силових трансформаторів в неробочий час і при зниженні навантаження | 1997р | 60 | 5 | 5 | | 50 | ЕЦ | |

| 1 | 3 | 4 | 5 | 6 | 7 | 8 | 9 | 10 |
|---|---|---|---|---|---|---|---|---|
| 8. Забезпечення максимального завантаження електропечей за рахунок раціонального розміщення деталей і недопускання їх експлуатації з завантаженням меншим 70% їх об"єму впровадження режимних карт роботи електропечей | 1997р | 40 | 7 | 11 | 11 | 11 | ЛЦ,ЛОЦ ВЛ | |
| 9. Організація приладного обліку окремих структурних підрозділів | 1997р | 5 | 1 | 1 | 1 | 1 | цехи,ВЛЬ, ЛЦ,ВЛ | |
| 10. Впровадження режиму автоматичного регулювання роботою турбокомпресорів енергоблоку | 1986 1997р | 110 | – | – | – | 110 | ЛЦ,ВЛЬ | |
| Всього по електроенергії тис квт год | | 640 | 67 | 116 | 11 | 241 | | |
| Теплоенергія Гкал | | | | | | | | |
| Обмеження пар. навантаження в літній період на весняні дні і неробочий період доби | 1997р | 400 | 600 | 600 | 600 | 600 | ЛЦ | |
| Ізоляція теплових мереж і теплоспоживаючих установок | 1997р | 60 | 60 | 60 | 60 | 60 | ЛЦ,цехи | |
| Регулювання системи опалення з метою недопущення перегріву і наладка теплових мереж на розрахункову температуру | 1997р | 60 | 60 | 60 | 60 | 60 | ЛЦ,ВЛЬ | |
| 4. Впровадження і експлуатацію установки нагріву миючого розчину агрегату підготовки поверхні кузова в КСК-1 продуктами горіння газу СНЗ10 взамін нагріву паром | 1997р | 40 | 60 | 60 | 60 | 60 | КСК-1,ВЛЬ,ЛЦ, ЛЛВЛ,ЛОТР,ЛР | |
| 5. Модернізація сушильної камери № 1 ЦАВ з нагрівом в ній теплоносія для підігріву миючого розчину агрегату підготовки поверхні 1,2,3 лінії фарбувальної дільниці ЦАВ продуктами горіння газу взамін пари | 1997р | 1000 | – | 500 | 500 | 500 | –"– ЦАВ | |
| Всього по теплоенергії Гкал | | 3740 | 705 | 970 | 1000 | 1040 | | |

BEST AVAILABLE COPY

| 1 | [illegible] | [illegible] | 4 | [illegible] | [illegible] | [illegible] | [illegible] | [illegible] |
|---|---|---|---|---|---|---|---|---|
| | [illegible] газ, тис куб м | | | | | | | |
| 1 | Організація прилладного обліку окремих структурних підрозділів | 1кв 1/р | 4 | 0,0 | 1 | 1 | 1,0 | цехи,ЦЕС,ЦЕТ |
| 2 | Впровадження приладів комерційного обліку і зчитуючих пристроїв пропорційних затрат об"єму споживання газу | 1/р | 6 | | | | | ЦЕС,ЦЕТ |
| 3 | Організація роботи газових печей з максимальним завантаженням і ущільненим графіком роботи. Впровадження режимних карт роботи | 1/р | 4 | 1 | 1 | 1 | 1 | ЦЕС,ЦЕТ |
| 4 | Заміна топок конструкції [illegible] на більш економічні газові пальники зі струйною стабілізацією [illegible] | 1кв 1/р | [illegible] | – | [illegible] | | [illegible] | ЦЕС,ЦЕТ,ЦЕТ |
| | Всього газу тис куб м | | | [illegible] | [illegible] | [illegible] | [illegible] | |

Головний енергетик [illegible]

Звіт про виконані заходи по економії паливно-енергетичних ресурсів за 9 міс.

| | Од виміру | Передбачено на планом | Фактично | Виконано |
|---|---|---|---|---|
| Електроенергія | т. кВт год | 304 | 236,5 | 78% |
| Теплоенергія | Гкал | 2695 | 1527 | 57% |
| Газ | т куб м. | 17,5 | 14,5 | 83% |

BEST AVAILABLE COPY

BEST AVAILABLE COPY

Шифр предприятия

| | | | | | | | |
|---|---|---|---|---|---|---|---|
| | | | | | | | |

шифр отделения | шифр мин-ва | шифр предприятия

Предприятие ВАТ „ЛАЗ"

Адрес Сумгайыт, 46

Ведомость

# СУТОЧНЫЙ ГРАФИК

электрической нагрузки «25» февраля 1997 г

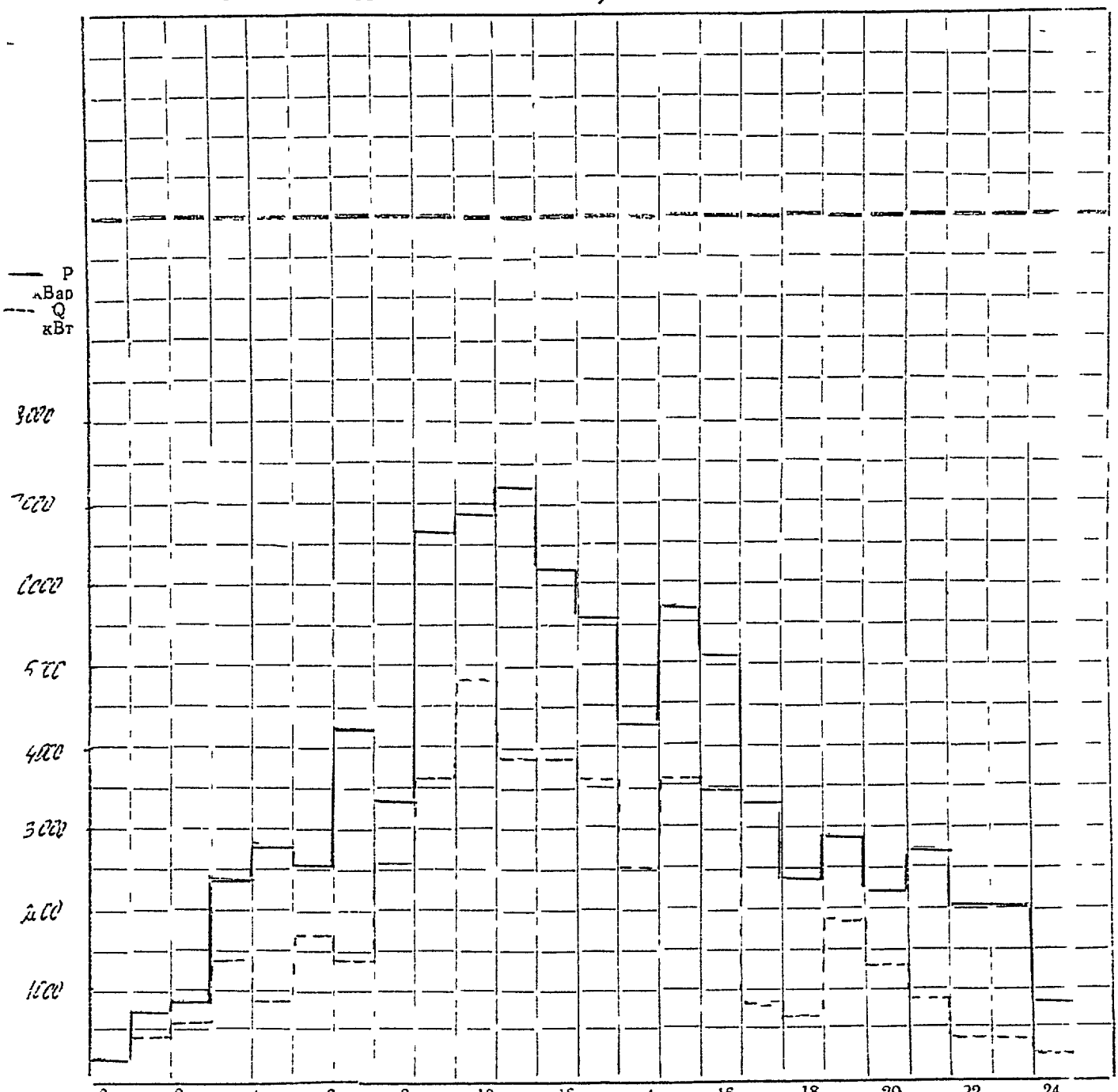


1 Присоединенная мощность трансформаторов (кВа)
2 Мощность трансформаторов в работе (кВа)
3 Мощность компенсирующего оборудования (кВар ч)
4 Общая уст мощность двигателей (кВт)
5 Установленная мощность СД (кВт)
6 Мощность токоприемников с активной нагрузкой (кВт)
7 Среднемесячное потребление субабонентов (т кВт ч)
8 Минимальное потребление одного выходного дня (т кВт ч)
9 Сумма значений активной мощности за сутки (кВт ч)
10 Сумма значении реактивной мощности за сутки (кВар ч)
11 Сумма значений мощности вкл конденсаторов за сутки (кВар ч)

| | | | | | | |
|---|---|---|---|---|---|---|
| | | 4 | 5 | 9 | 4 | 0 |

117

123

Шифр предприятия

| | | | | | | |
|---|---|---|---|---|---|---|
| | | | | | | |

шифр отделения | шифр мин ва | шифр предприятия

Предприятие ВЕТ „АЗ"

Адрес

Ведомость

# СУТОЧНЫЙ ГРАФИК

электрической нагрузки «15» февраля 1996 г

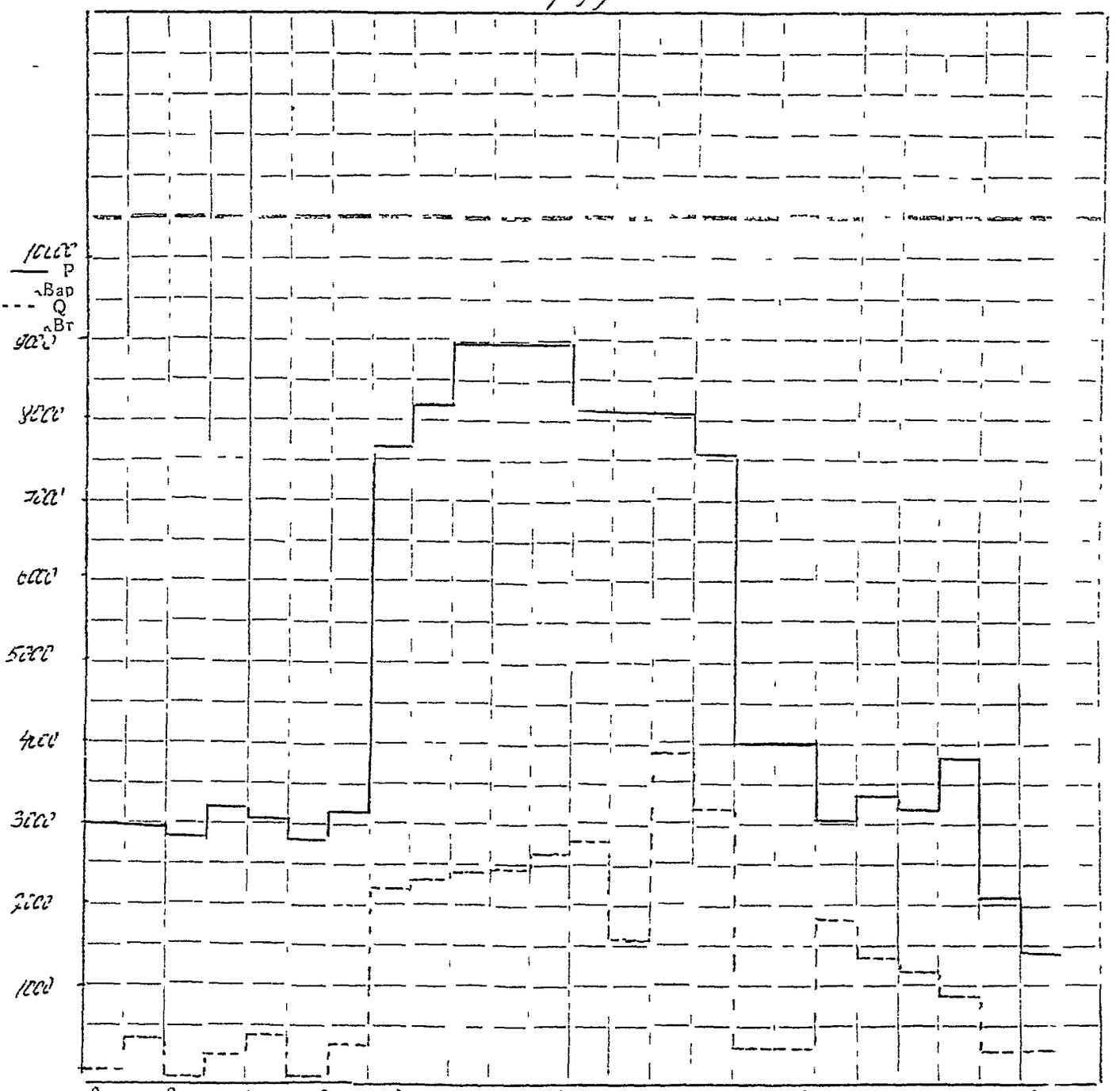


| | | |
|---|---|---|
| 1 | Присоединенная мощность трансформаторов | кВа) |
| 2 | Мощность трансформаторов в работе | (кВа) |
| 3 | Мощность компенсирующего оборудования | (кВар ч) |
| 4 | Общая ст мощность двигателей | (кВт) |
| 5 | Установленная мощность СД | (кВт) |
| 6 | Мощность токоприемников с активной нагрузкой | (кВт) |
| 7 | Среднемесячное потребление субабонентов | (т кВт ч) |
| 8 | Минимальное потребление одного выходного дня | (т кВт ч) |
| 9 | Сумма значений активной мощности за сутки | (кВт ч) |
| 10 | Сумма значений реактивной мощности за сутки | (кВар ч) |
| 11 | Сумма значений мощности вкл конденсаторов за сутки | (кВар ч) |

| | | | | | |
|---|---|---|---|---|---|
| | | 3 | 2 | 1 | 4 | 6 |

BEST AVAILABLE COPY

BEST AVAILABLE COPY

ЗАГАЛЬНОВИРОБНИЧІ ЦЕХОВІ НОРМИ РОЗХОДУ ТЕПЛОВОЇ ЕНЕРГІЇ НА ВЕНТИЛЯЦІЮ, ПОВІТРЯНЕ ОПАЛЕННЯ

| Найменування цехів, ділянок | Об'єм цехів, ділянок $м^3$ | Годинний розхід теплоенергії на вентиляцію, повітряне опалення та кондиціонування Гкал/год | Розхід теплоенергії на вентиляцію, повітряне опалення та кондиціонування за рік Гкал | Середньорічна норма розходу теплової енергії на вентиляцію |
|---|---|---|---|---|
| I | 2 | 3 | 4 | 5 |
| Штампово-інструментальний цех | 52320 | I304000 | I375,22 | 0,263 |
| Цех складання і випробовування автобусів | I30235 | I400000 | I476,46 | 0,0II |
| Кузовний цех | 5I840 | 4600000 | 485I,23 | 0,094 |
| Пресовий цех | I26752 | 720000 | 759,32 | 0,006 |
| Цех дрібної листової штамповки | 4I769 | 540000 | 569,49 | 0,0I4 |
| Деревообробний цех | 55620 | 950000 | I00I,89 | 0,0I8 |
| Ливарний цех | 2I675 | 494000 | 52098 | 0,024 |
| Цех дизельних автобусів | I29400 | 2I402000 | 22570,89 | 0,I74 |
| Цех туристичних автобусів | I3870I | 2730000 | 2879,I | 0,02I |
| Цех складання і зварювання кузовів автобусів | 205572 | 4900000 | 5I67,62 | 0,025 |
| Арматурний цех | 38556 | 33I0000 | 3490,78 | 0,09I |
| Автоматно-механічний цех | 2703I | 88I600 | 929,75 | 0,034 |
| Цех металопокриття | 97I87 | 9040000 | 9533,73 | 0,098 |
| Цех товарів народного вжитку | 25050 | 220000 | 232,02 | 0,009 |
| Цех нестандартного обладнання | 58800 | 380000 | 400,75 | 0,007 |
| Залізничний цех | 2500 | 2I4000 | 225,69 | 0,09 |
| Дослідно-експерементальний цех | 32400 | 240000 | 253,II | 0,008 |
| Енергетичний цех всього і в т ч блок очисних споруд, енергоблок | 5I433 | I420000 | I497,55 | 0,029 |
| Цех внутрішньозаводських перевезень | 2760 | 26I000 | 275,25 | 0,099 |
| Цех гідромеханічних передач - 2 | I84320 | 8782000 | 926I,64 | 0,05 |
| Цех гідромеханічних передач -3 | 82950 | I432000 | I5I0,2I | 0,0I8 |
| Експерементальний цех | 3444 | I50000 | I58,2 | 0,046 |
| Волочильна дільниця | 6630 | 550000 | 580,04 | 0,087 |

| 1 | 2 | 3 | 4 | 5 |
|---|---|---|---|---|
| Цех опресовки | 40300 | 402400 | 424,38 | 0,01 |
| Фарбоприготувальний цех | 15187 | 982000 | 1035,63 | 0,068 |
| Профтехучилище 53 | 18100 | 160000 | 168,74 | 0,01 |
| Адміністративно-побутовий корпус | 67880 | 1284000 | 1354,13 | 0,020 |
| | | 68749000 | 72503,8 | |

Втрати теплоенергії в теплових мережах (з поверхні арматури та фланців та через частково відсутню ізоляцію на трубопроводах) складають 66538 Гкал

5

127

# APPENDIX E PHOTOGRAPHS OF THE PLANT

Готовая продукция ЛАЗа
LAZ finished production

Станция перекачки конденсата
Condensate Recovery Pump Station

Выброс пара вторичного вскипания в атмосферу
Drainage into the Atmosphere

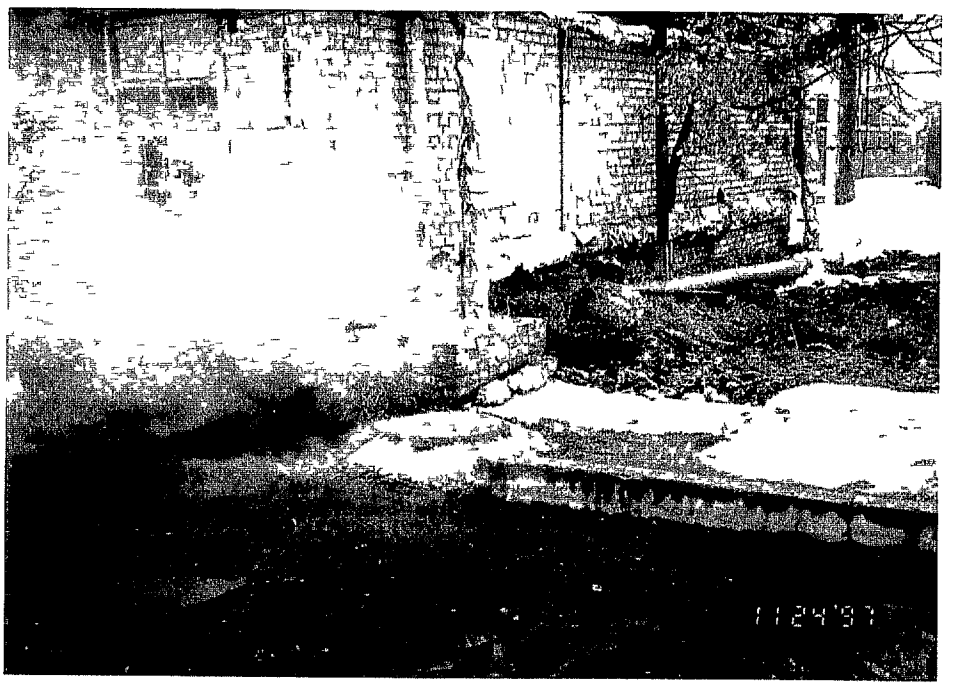

Потери тепла в паропроводе
Heat losses in a steam pipeline

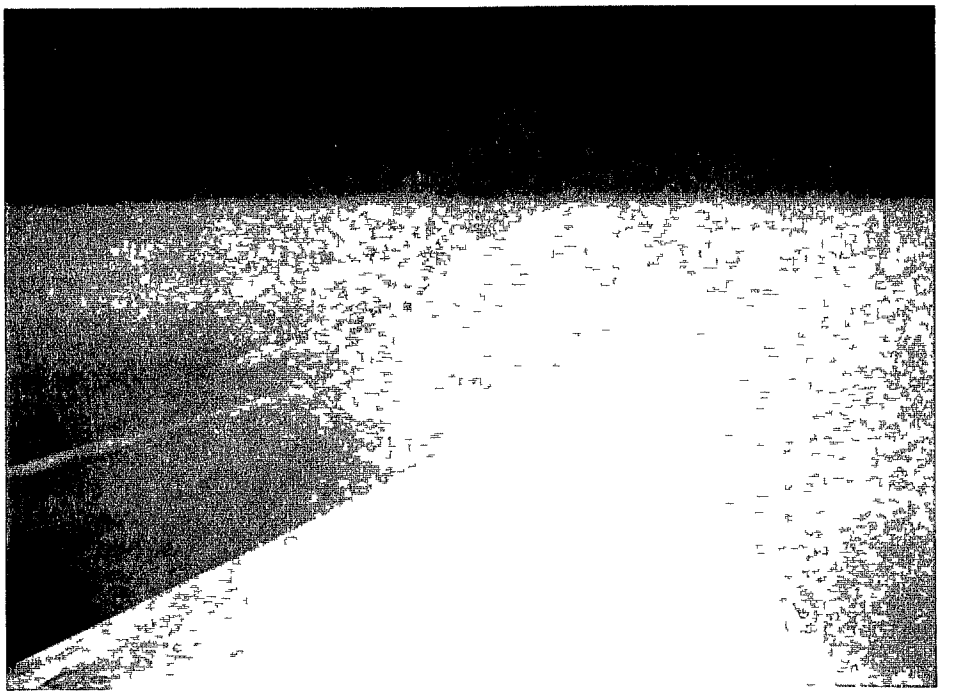

Гальванические ванны
Electric plating tanks

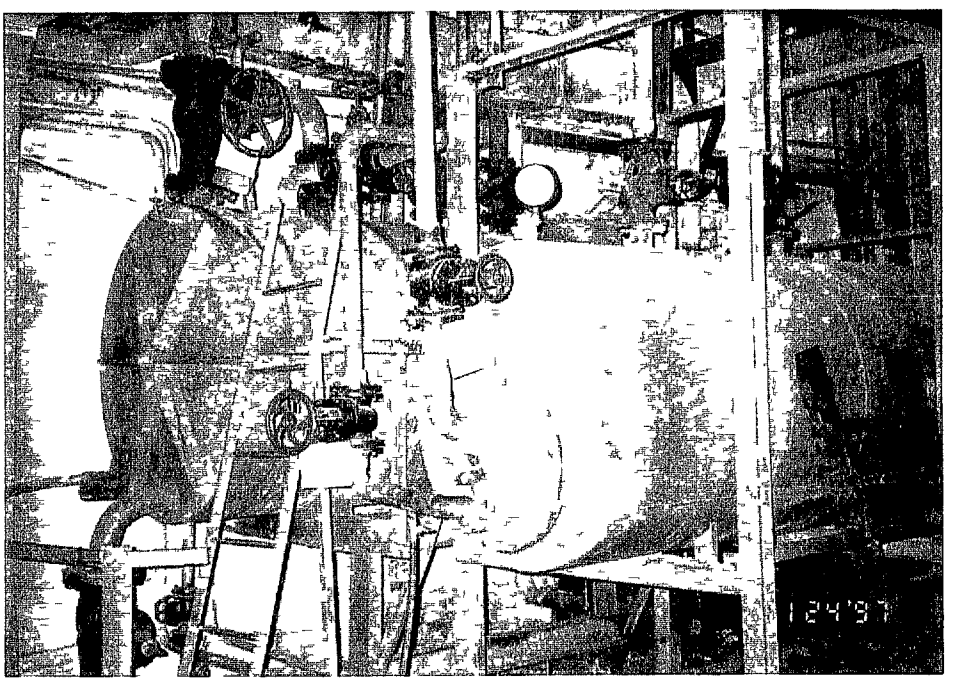

Паро-водяной трубчатый теплообменник горячего водоснабжения
Steam & water tube heat exchanger in the hot water supply system

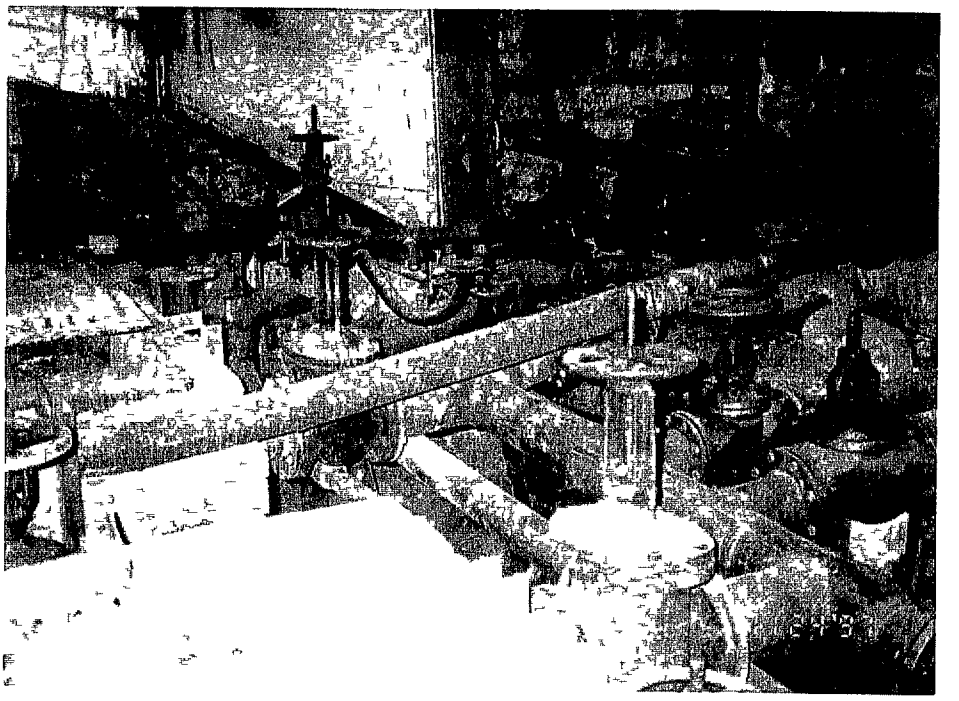

Станция сбора и возврата конденсата
Condensate Collections ıcc vvery Pump Station

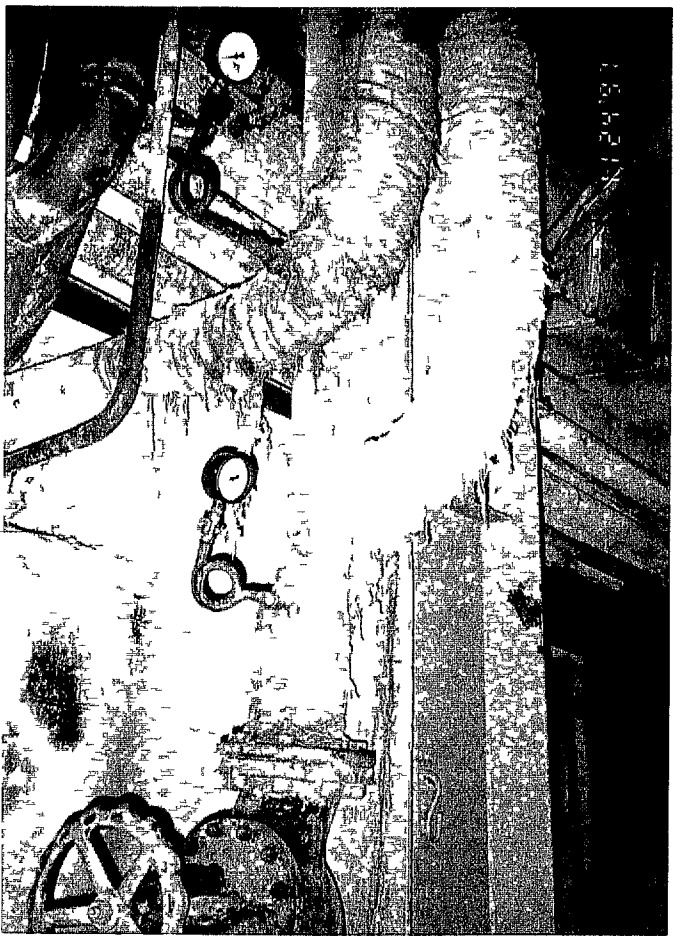

Изоляция паропроводов
Steam pıpelınes ınsulatıon

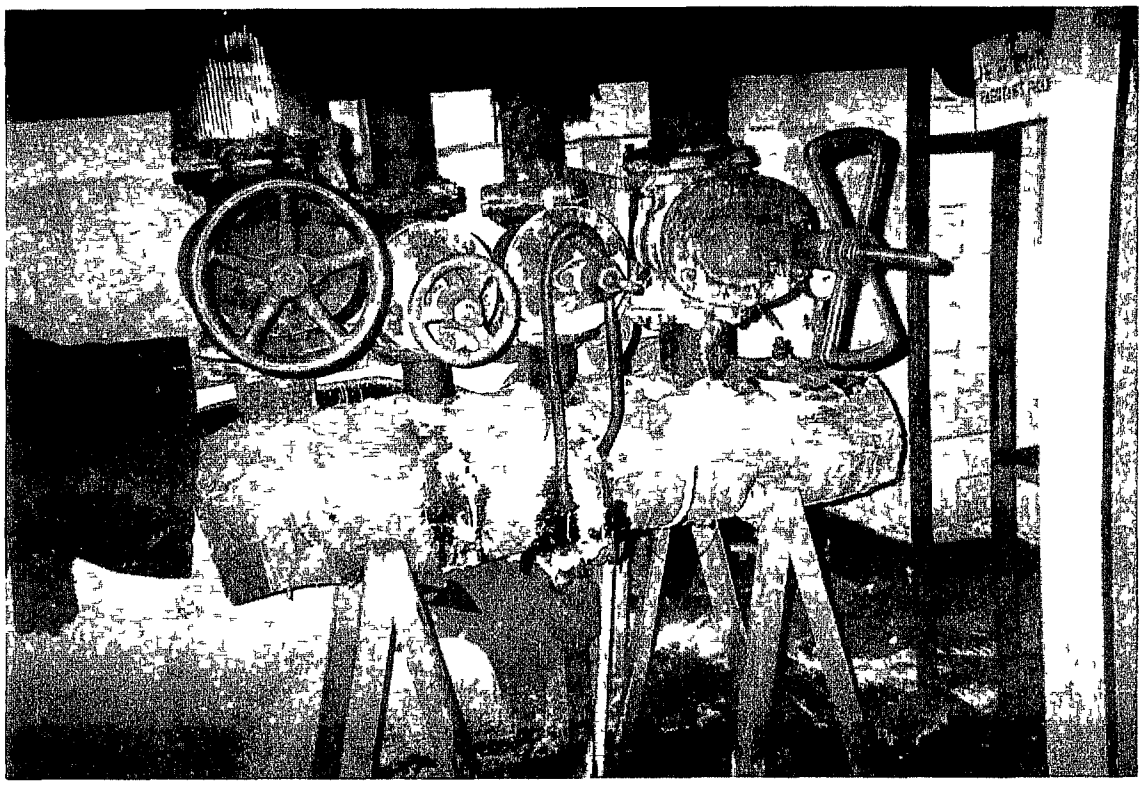

Паросборный коллектор
Steam header

# APPENDIX F ABBREVIATIONS AND MEASUREMENT UNITS

## ABBREVIATIONS

| | |
|---|---|
| CCD | - condensate contamination detection system |
| CHP | - Combined Heating Plant, |
| CIS | - Commonwealth of Independent States, |
| ESCO | - energy servicing company |
| ECO | - energy conservation opportunity, |
| Fig | - figure, |
| hrn | - hryvnia, |
| LAZ | - Lviv Bus Plant |
| tel | - telephone, |
| USAID | - United States Agency for International Development, |
| VAT | - value-added tax, |

## MEASUREMENT UNITS

barg - atmosphere gauge
BTU - British thermal unit
$^0C$ - degrees Celcium
$cm^2$ - centimeter squares
$^0F$ - degrees Faranheit
g - gram
Gcal - gigacalory
GJ - gigajoule
h - hour
kcal - kilocalory
kg - kilogram
kgf - kilogram-force
kV - kilovolt
kV-A - kilovolt-amper
kW - kilowatt
kW h - kilowatt hour
Lm - lumen
m - meter
$m^2$ - meter squared
$m^3$ - meter cubed
min - minute
MJ - megajoule
mm H2O - millimeters of the water column
MW - megawatt
t - tonne
t/h - tonnes per hour
W - watt

## Currency rates of exchange

1 hrivnia - local currency unit
1hrivnia = US$0 54 as of December 1997

## Conversion factors

**Heat**

1 cal = 4 187 J
1 Ccal = 4 187 kJ = 3 968 BTU
1 Gcal = 4 187 x $10^3$ = 4 187 GJ
1 BTU = 1055 J = 1 055 kJ = 1 055 x $10^3$ MJ

**Power**

1 W = 3 6 x $10^3$ J = 3 6 kJ
1 kW = 3 6 x $10^3$ kJ = 3 6 MJ = 860 Ccal
1 MW = 3 6 x $10^3$ MJ = 860 Ccal
1 Ccal = 1 163 x $10^3$
1 Gcal = 1163 kW = 1 163 MW
1 kW = 0 102 HP (boiler)
1 kW = 1 34 HP (mech)

**Pressure**

1 kg/cm = 1 atm
1 atm = 101 325 kPa = 0 1 Mpa
1 bar = $10^5$ Pa = 100kPa = 0 1 Mpa

**Length**

1 mm =0 03937 in = 0 00328 ft
1 cm = 0 3937 in = 0 0328 ft
1 m = 3 937 in = 3 281 ft

**Weight**

1 gram = 2 2046 x $10^3$ lb
1 kg = 2,2046 lb
1 t = 1000kg = 2 2046 x $10^3$ ft

**Area**

1 $cm^2$ = 0 155 square in = 1 076 x $10^3$ ft
1 $m^2$ = 1 55 x $10^3$ square in= 10 76 square ft

**Volume**

1 $m^3$ = 35 31 cu ft = 1000 l
1l = 35 31 x $10^3$ cu ft
1l = 0 264 US gal

**Heat content**

1 kJ/kg = 0 43 BTU/lb
1 kJ/$m^3$ = 26 84 x $10^3$ BTU/cu ft
1 MJ/$m^3$ = 26 84 BTU/cu ft
1 Ccal/$m^3$ = 4,187 kJ/$m^3$ = 0 112 BTU/cu ft

**Temperature**

$^0$C = 0 56 ($^0$F-32)