Delivery order No 30
Industrial energy efficiency in Ukraine
November 1997

PN-ACD-547
99364

REPORT
ON ENERGY AUDIT
AT *KUPYANSK MILK CANNING PLANT*
City of KUPYANSK, UKRAINE

Prepared by Gurvinder Singh
Viktor Svistunov
Vladimir Prokopenko

Prepared for United States Agency forInternational Development
Washington D C 20523-1415

Burns & Roe Enterprises, Inc
140 K Street, NW, Suite 1050, Washington D C 2005
Telephone 202-408-6831 Facsimile 202-408-6835

REPORT OH INDUSTRIAL ENERGY EFFICIENCY IN UKRAINE
KUPYANSK MILK CANNING PLANT

TABLE OF CONTENTS

PREFACE 4

1 EXECUTIVE SUMMARY 5
- 1 1 Introduction 5
- 1 2 Brief survey 5
- 1 3 Recommendations 6
- 1 4 Operation and maintenance 7
- 1 5 Implementation 8

2 GENERAL/BACKGROUND 9
- 2 1 History of plant 9
- 2 2 Types of products 10
- 2 3 Significance of sector to economy 10

3 CURRENT STATUS OF PRODUCTION 11
- 3 1 Total capacity of plant 11
- 3 2 Recent production 1997 vs 1995 & 1996 11
- 3 3 Current trend prospects of development 11
- 3 4 Exports vs Domestic production 12

4 FINANCIAL STATUS OF PLANT 13
- 4 1 Currency vs barter 13
- 4 2 Viability of plant 13

5 ANNUAL ENERGY CONSUMPTION & COSTS 15
- 5 1 Annual consumption, 1995, 1996 & 1997 15
- 5 2 Current tariffs for fuel and energy 20
- 5 3 Energy consumption profile 20

6 PREVIOUS ENERGY IMPROVEMENTS 23

7 ENERGY AUDIT 24
- 7 1 Short-term ECO 24
- 7 2 Long-term ECO 28

8 ENVIRONMENTAL IMPACTS OF RECOMMENDATIONS 29

APPENDICES

A ENERGY CONSERVATION OPPORTUNITIES

B PRELIMINARY SPECIFICATIONS

C INFORMATION FROM EQUIPMENT MANUFACTURERS

D MEASUREMENTS AND DATA COLLECTED

E PHOTOGRAPHS OF PLANT

F CONVERSION FACTORS

G ABBREVIATIONS

PREFACE

As part of Delivery Order #30, Industrial Energy Efficiency - Ukraine, the U S Agency for International Development (***USAID***) sponsored energy efficiency audits at 24 industrial plants that met the criteria of ***USAID***

Each facility was evaluated based on selection criteria (approved by USAID) for the selection of target plants The criteria included a long-term economic viability of the plant, its financial condition, its generation of export revenues, production output versus nominal capacity, energy conservation potential, possibilities of project replication at similar enterprises and its access as a demonstration facility to other plants

This report details the findings of ***BURNS & ROE ENTERPRISES, Inc*** energy report performed at the Kupyansk milk canning plant

1. EXECUTIVE SUMMARY

1.1. Introduction

The Kupyansk milk canning plant was established *40* years ago and currently is a modern dynamically growing enterprise and one of the largest in its sector in Ukraine

Orientation at the continuous renovation of products and search for new technologies allow the plant to increase production annually and consistently produce the output of guaranteed quality

This energy audit has been conducted under the Industrial efficiency in Ukraine technical assistance program sponsored by the US Agency of International development referred as Delivery Order #30

This project consisted of performingtwenty four audits of industrial enterprises in Ukraine The purpose of the projectwas to develop Ukrainian energy service company (ESCO) capabilities To accomplish this task Burns and Roe Enterprises, Inc (the primary contractor) hired Ukrainian engineers These engineers were trained in U S techniques of conducting energy audits and ESCO concepts The industrial energy audits were conducted to facilitate the ESCO training

An energy audit team made up of one US expert and two Ukrainian engineers carried out energy audit November 17 through 21, 1997 in compliance with the objectives of the project and prepared the report

Since these industries are very large a one week site visit is not sufficient to adequately audit the entire facility In many cases it was necessary to focus auditing efforts on one system or only a portion of the entire plant Therefore, this audit is based on what could be accomplished during one week allocated While this audit contains numerous recommendations for the plant management, the plant management is encouraged to perform a complete audit of the entire facility Hopefully, the plant management will consider hiring the engineers trained under this project to continue this work, which will result in a complete understanding of energy usage within the plant, as well as a complete listing of all potential energy improvement projects

1.2. Brief survey

- Kupyansk milk canning plant is considered quite successful by Ukrainian standards
- As expected, the audit group found a lot of attractive opportunities for improvement of the energy efficiency at current energy prices When the energy prices were 20 to 30 times lower, energy efficiency improvements were uneconomical Today energy efficiency improvements make sense, but they are difficult for accomplishment due to exorbitant interest rates and distortions in economic incentives caused by the bartering system and mutual non-payments
- In total energy costs used by the plant steam makes 84%and out of total electric power use 76% are used for refrigeration These directions of energy use determine primary sources of energy savings
- Absence of energy submetering prevents institution of the basis for energy conservation and introduction of the energy management system
- A major energy savings opportunity is decentralization of thermal energy supply to the plant via building modular boiler room at the plant that will permit recovery of condensate to the boiler unit boiler room
- A large part of steam and condensate piping have obsolete thermal insulation

1.3. Recommendations

Recommendations listed in the report will improve energy efficiency of the plant, reduce the costs and consolidate competitiveness of the enterprise In the table 1 1 below several Energy Conservation Opportunities (ECO) with short-term payback are described as well as estimates of reduction of cost and simple payback of measures with implementation terms of less than one year For example, ECO #1 "Energy management"will institute systematic activities of energy management for which purpose an energy management section will be established responsible for the analysis of the energy consumption at the plant and for working-out of recommendations of renovation and improvement of any systems resulting in energy savings

In order to improve energy efficiency and to reduce energy costs the USAID will provide equipment for energy audits This equipment consists of portable instruments and meters for performing energy audits

ECO #2 "Insulation of steam distribution unit piping" will reduce direct heat losses

List of energy conservation opportunities (ECO)

Table 1 1

#	Description	Electricity savings 1 000 kWh	Heat savings Gcal	Annual savings $ (1997 prices)	Project cost $ (1997 prices)	Payback period years
1	Energy management	108	6,540	17 000	6,400	0 4
2	Insulation of steam distribution unit piping		74 5	1 640	900	0 5
3	Recovery of condensate from whole milk workshop		369	8 100	21 400	2 6
4	Automatic control of deep well pumps	1 16		1 950	2,030	1 0
5	Automatic control of cold water pumps	39 13		1,722	2,550	1 48
6	Optimization of hot water pump operation	53		2 333	800	0 3
7	Reduction of compressed air losses in oil and moisture separator	4		680 7	895	1 31
8	Automatic energy metering	160	980	30 000	61,000	2 1
9	Automatic temperature control in cold rooms		284 3	12 500	11,120	0 9
10	Decentralization of thermal energy supply		16,488	357,000	1,050 000	2 9
	Total	649 5	18,566	432 926	1,157,095	

ECO #3 "Recovery of condensate from whole milk workshop"will reduce consumption of heat by installation of receiver tank, condensate pump and controls between the whole milk product workshop and boiler room

ECO #4 " Automatic control of deep well pumps" will reduce electric power consumption by optimizing pump operation hours

ECO #5 "Automatic control of cold water pumps" will reduce electric power consumption

by utilizing variable speed drive for automatic coordination of pump capacities and water supply

ECO #6 "Optimization of hot water pump operation" will reduce electric power consumption by utilizing programmable timer for automatic start control of hot water pumps

ECO #7 "Reduction of compressed air losses in oil and moisture separator" will be ensured by installation of automatic oil and moisture separator, simultaneously air dehumidifier will be protected from oil contamination and electric power savings will be achieved

ECO #8 "Automatic energy metering" will result in true-to-life picture of the plant energy use, will encourage enrgy savings and prove validity of energy consumption indicators for the in-plant settlements

ECO #9 "Automatic temperature control in cold rooms" will ensure optimal temperature of produce cooling and reduction of electric power consumption by utilizing temperature controls

ECO #10 "Decentralization of thermal energy supply" will cut off the plant from steam supply of the sugar refinery by building own boiler room that will result in reduction of losses in long pipeline networks, cut down heat consumption by matching demand and supply

Capital investment to the amount of US$19,650 into energy efficiency improvement with short-term payback (ECO # 01, 02, 04, 06, 09) will lead to annual savings of US$38,423, reduction of electric power use by 446 5 thousand kWh and thermal power use by 728 5 Gcal Investment of US$8,584 into energy efficiency with payback periods of more than 1 year (ECO # 03, 05, 07, 08) will lead to annual savings of US$40,503 and will cut down electric power use by 203 thousand kWh and thermal power use by 1,349 Gcal

Additional investment of US$1,050,000 into ECO #10 may generate annual savings of up to US$357,000 and reduction in thermal power consumption by 16 5 Gcal

Total reduction in electric power use will be at 649 5 thousand kWh (11 4% of the 1996 use) and 18 6 Gcal (56 8%) in thermal energy

Total reduction of emission of hazardous substances due to implementation of the proposed measures will be 27 63 tons including 2 86 ton of solid particles, 7 03 ton of carbon oxide, 11 31 ton of nitrogen oxides, 6 43 tons of sulphur oxide

The above mentioned ECOs can be implemented at diverse industrial enterprises i e serving as the standard solution of a common problem

1.4. Operation and Maintenance

It is typical for industrial plant management to mainly think in terms of production, and to want to increase output Therefore it is sometimes difficult to think of the importance of energy and energy costs on the operation of the plant

For the Kupyansk Milk Canning Plant as with most industries in Ukraine previously energy costs made up an insignificant share in total production costs, hence the energy was not a major consideration in plant operations

With the rising energy costs over the past few years, energy costs have now become very significant For the Kupyansk Milk Canning Plant, energy costs are now about six percent of the cost of production

While energy and energy costs are now well understood by the Kupyansk Milk Canning Plant staff, there is the tendency to think mainly of having to implement large projects with

the intent of saving large amounts of energy This is unfortunate since many small energy saving projects exist that have very good payback periods

But it is common to ignore these since the savings per unit might be low For instance, the installation of steam traps might not seem as attractive as installing a large project such as a natural gas fired boiler system to produce steam But these small projects are very important, and when the total number of steam traps is considered, the total savings resulting from this item is very significant

Most industries in Ukraine have a person or persons who are referred to as energy engineers These specialists are responsible for uninterrupted energy supply of necessary quality and amounts to production lines, and ensuring energy savings However, due to cuts in production costs typically the specialists of auxiliary services are the first to be laid off, energy supply service included This results in remaining specialists mostly tackling not the energy efficiency issues at their plants but ensuring that there is adequate supply of energy But with the rise in energy prices and the uncertainty of availability of all fuels, an energy manager to conserve energy becomes important Each plant should seriously consider establishing an energy manager position as a minimum, and for large industries, possibly even an energy management section

These people should routinely be monitoring all operations, and especially reviewing monthly energy consumption This monthly data should be graphed and compared to previous months and years to determine any variations in consumption, identify causes of them and make decisions on the necessary energy consumption remedial measures to prevent unreasonable energy use For instance, if monthly consumption increases, the reasons why should be determined and if appropriate, steps taken to correct any problem

In addition, the energy management staff should also review each process, and look for energy saving opportunities, certification of technologies and equipment for energy efficiency They should see that all cost effective energy improvements are implemented, beginning with items identified in this energy audit They should then also have responsibility to review all proposed changes to the facility to ensure that each process is as energy efficient as possible

It would be good to have a thermal specialist (someone who is knowledgeable about steam, refrigeration, hot water, and natural goes systems) and an electrical specialist

In many facilities the energy management section is assigned an energy goal, such as "reducing the overall energy usage by five percent per year" While the percentage goal can vary, this type of challenge industries gives a benchmark by which the section can be evaluated And in industries in Ukraine, where energy efficiency is just at its infancy, the percentage goal could even be higher Some industries also have an incentive program, in which employees are encouraged to submit energy efficiency improvement ideas These ideas, if accepted and implemented, would result in a small reward being given to the employee

1.5. Implementation

Implementation of ECOs listed in the table is planned following completion of regular phases of the project in accordance with Attachment A to the Memorandum of Understanding of February 26, 1998

2. GENERAL/BACKGROUND

Name - closed joint-stock company "Kupyansk milk canning plant"

Director - Alexander A Radchenko

Chief energy engineer - Yuri P Lyashenko

Contact phone (05742) 5-31-16

Fax (05742) 5-13-59

Address UKRAINE 312640 Kupyansk, Kharkiv oblast, Lomonosova str 26

2.1. Plant history

The Kupyansk milk canning plant was established 40 years ago and currently is a modern dynamically growing enterprise

Orientation at the continuous renovation of products and search for new technologies allow the plant to increase production annually and consistently produce the output of guaranteed quality

The structural diagram of the plant is shown in Fig 2 1

The base for the product quality of the plant is raw milk purchased by the plant in Kupyansk, Dvurechenski, Shevchenkovski and other districts of the Kharkiv oblast Besides, partially milk is imported from other neighboring regions of Ukraine Practically all milk is delivered first grade, 83% of it is cooled

The milk plant is a sophisticated production and economic complex which comprises the following the central plant with milk processing capability of 500 tonnes daily and Shevchenkovo milk reception unit with milk processing capability of 200 tonnes daily The central plant includes four main production workshops condensed milk canning, whole milk product, powdered milk and can making All workshops are equipped with modern high-capacity machinery, they have extensive engineering structural networks The share of imported machines in the total inventory of technological production and auxiliary equipment reaches more than 95%

The primary production equipment ensures reception and processing of raw milk, packing and storage of finished products Prior to delivery to customers all products undergo thorough physical, chemical and microbiological testing that warrants their high quality Delivery of canned condensed milk is carried out in No 7 tin cans packaged in cardboard boxes Half of whole milk products and "Farmer's" butter are delivered in small-size packaging

After commissioning in 1970 s of the whole milk product workshop the plant capacity in whole milk product and butter output has grown threefold The production output of processed milk, sour cream, creams, dietary and cheese products has grown substantially that enabled continuous supply of dairy products to the town and surrounding areas The range and share of products in small-size packaging increased In 1996 the production line for sterilized milk and juice packing went into operation

Built at the beginning 1980 s the powdered milk workshop equipped with high capacity imported machinery and automated production control ensures practically full and integrated processing of the skimmed fat-free milk that significantly increased production output of final products per one tonne of raw milk

In 1995 the new line for production of milk glue was installed Over the previous decades the plant capacities have more than tripled, the share of newly installed equipment is 85% Handling and storage operations have been almost entirely mechanized

In 1996 the enterprise changed its form of ownership and turned into the closed joint-stock company "Kupyansk milk canning plant"

Over the last 3 years the number of personnel has stabilized The average number of plant employees is 626

2.2. Types of products

Primary products are condensed milk, creams with coffee, cocoa and chicory, butter, sour cream, cottage cheese, wide range of various whole milk products, milk glue

Powdered fat-free milk produced from secondary resources is delivered to the area cattle breeding farms for young animals feeding and for exportation

2.3. Significance of the sector for Ukrainian economy

In Ukraine there are 315 dairies, 10 out of them are large and by many indicators are similar to the Kupyansk milk canning plant They are the following ones

- Second Kiev plant
- Third Kiev plant
- Second Donetsk plant
- Dnepropetrovsk plant
- Kharkov plant
- Odessa plant
- Lviv plant
- Krasnookyanski plant
- Kovel plant
- Chertkov plant

The Kupyansk milk canning plant is a large Ukrainian producer of canned condensed milk High quality of its products ensures demand in all parts of Ukraine, in the CIS countries and abroad

In entire Ukraine dairy sector employs 64 thousand persons according to the 1996 data The production output was 1 6 mln tonnes out of which the Kupyansk milk canning plant produced 20,000 tonnes (1 25%) with 0 98% of the total workforce of the subsector

3. CURRENT STATUS OF PRODUCTION

3.1. Total capacity of plant

According to the data of the planning and financial office of the plant maximum daily volume of milk processing at the available capacity is 700 tonnes

3.2. Recent production: 1997 vs. 1995 & 1996

Real production figures of primary products over the last three years are given in Table 3 1

Table 3 1 Production output

Types of products	Unit	Output		
		1995	1996	1997 (10 months)
Whole milk products	tonnes	6,829	5,932	7,000
Butter	tonnes	1,218	1,087	1,800
Canned milk	thou cans	27,803	29,906	36,000

The analysis of the data from the table shows that overall volumes of production output in 1996 as compared to 1995 were as follows of whole milk products (WMP) - 86 9%, of butter - 89 2%, of canned condensed milk - 107 6%, which were caused by the drop of total national purchasing power, loss of traditional selling markets and lack of new ones, disruption of previous milk supply co-operation ties

The rise of production output in 1997 as compared to 1996 reveals certain success of the plant management in dealing with the above mentioned problems, transfer of the focus to long-life products It resulted in the following average monthly production output in 1997 as compared to 1996 WMP - 141 7%, butter - 190 7%, canned condensed milk - 144 5%

3.3. Current trend: prospects of development

In accordance with the perspective plan of reconstruction and development of the Kupyansk milk canning plant a new production building for whole milk products is under construction, it is planned to build an ice cream workshop, butter workshop, milk preparation cooling unit and other production and auxiliary facilities

Introduction of automated production metering and control system is nearing completion All this will permit the plant to further consolidate its position as one of the leading enterprises in the milk processing industry of Ukraine

3.4. Exports vs. domestic production

The products of the Kupyansk milk canning plant are well known not only in the CIS countries but also in Cyprus, Singapore, Vietnam and other regions of the world

Exports vs domestic production are shown in Table 3 2

Table 3 2 Exports vs domestic production

Types of products	1995	1996	10 months of 1997
1 Powdered fat-free milk	50	70	90
2 Canned milk	20	25	30

The year-by-year rise in production exports first and foremost characterizes its high quality Second, this indicator currently has major significance in estimation of production and technological potential of the plant Judging from the data above it is quite high In the course of the audit high qualifications of the plant staff and large quantities of imported modern production equipment were also evident

4. FINANCIAL STATUS OF PLANT

4.1. Currency vs. barter

There is no bartering at the plant

4.2. Viability of the plant

Main financial results of the plant are shown in Table 4 1

Table 4 1 Main financial results in mln hrivnas

Indicator	1995	1996	1997 (9 months)
1 Revenue (gross income)	30 801	44 636	21 275
2 VAT (20%)	3 378	5 308	2 318
3 Production costs	20 232	34 128	15 877
4 Pre-tax profit	7 218	5 468	3 399
5 Actual production output	25 59	33 934	20 244

The data in Table 4 1 show that in 1996 as compared to 1995 gross income grew 1 5 times, production costs 1 68 times, actual production output 1 33 times that characterizes general decline of production output in physical terms and given profit decrease by 24 2% they allow us to draw the conclusion of significant impact of the 1996 indexation (reassessment) of capital assets on the financial results of the plant

Confirmation of this is the change of residual cost of capital assets given in the statistical report by the form 1"The balance of enterprise as of 01 01,1997" (line 010) where it is shown that as of January 1, 1996 the cost was Hr 2,124,746 and as of January 1, 1997 it was Hr 12,288,814 i e it rose 5 78 times

The decrease of cost indicators of 9 months of 1997 can be explained by taking into account production output growth over the same period as compared to 1996 (see Table 3 1), general stabilization of the national currency and certain reduction of production prices

Hence, different cost bases in 1995, 1996 and 1997 do not allow us to objectively view relative efficiency of operation per each year Some evaluation can be made by plant viability indicators in Table 4 2 which contains satisfactory values of stable financial situation of the plant over the studied period

Table 4 2 Indicators of financial stability

Indicator	1995	1996	1997 (9 months)
1 Profitability %	27	14	18
2 Liquidity ratio	2 63	1 82	1 43

The plant has no debts

All incoming and outgoing bills are collected each year and kept in the books

5. ANNUAL ENERGY CONSUMPTION AND COSTS

5.1. Annual consumption, 1995, 1996 & 1997

The types of energy used at the Kupyansk milk plant are electricity, high pressure steam and natural gas Electricity and natural gas are purchased from the local utility, whereas high pressure steam is purchased as superheated steam at 30 atmospheres (440 psig) and 400 ^{0}C (752 ^{0}F) from the neighboring sugar plant The breakdown of annual consumption and costs of these three energy sources is shown in table 5 1 below Steam and electricity make up 46 4 percent and 53 5 percent of the total energy used by the plant Steam, however, is disproportionately higher in cost and makes up 84 percent of the total annual energy costs while electricity costs are only 16 percent of the total cost Natural gas use is negligible It represents less than 0 1 percent both in terms of total energy use and cost The breakdown of annual energy consumption and costs is shown on Fig 5 1 and 5 2

Table 5 1 Total Energy Use by Energy Source and Cost (Based on 1996 Data)

Fuel	Annual Use	Annual Use in Gcals	Share of Energy Use, %	Annual Cost, US$	Share of Annual Cost, %
Electr icity	5 684 000 kWh	4 888	10 3	170 500	15 7
Steam	42 400 Gcal	42 400	89 4	916 600	84 2
Nat Gas	16 000 cubic m	142	0 3	1300	0 1
Total	-	**91 442**	**100**	**1 088 400**	**100**

Electricity and steam are supplied to three shops or production units whole milk products, powdered milk, and condensed milk The can making shop uses electricity and natural gas

The monthly consumption of electricity and steam is shown in Fig 5 3 and 5 4 The sharp drop in steam consumption in July of 1996 is due to a shift in the reporting of steam use being transferred to June and August by an agreement with the sugar plant

The total consumption of electricity in 1996 was 5 684 million kWh, while superheated steam consumption was 42,392 Gcal The peak production period is May through September The maximum steam use both in 1996 and 1997 was slightly over 5,000 Gcal and occurred in the peak production summer months The peak steam consumption does not occur during any one month in the summer but varies each year depending on the delivery of raw milk from the dairy farms

Similarly, electricity consumption is driven by the refrigeration needs in the plant According to the plant staff approximately 57,6 percent of their total electricity use in 1995 and 76 percent in 1996 and 1997 were taken up by the refrigeration plant equipment The refrigeration load is driven by the production capacity as well as the weather And since the

high production season coincides with the warmer summer months electricity consumption is at its peak in July and August The electrical energy use during these months is approximately 0 8 million kWh per month The electrical energy consumption in 1997 was higher due to the increase in production output of whole milk products, butter and condensed milk

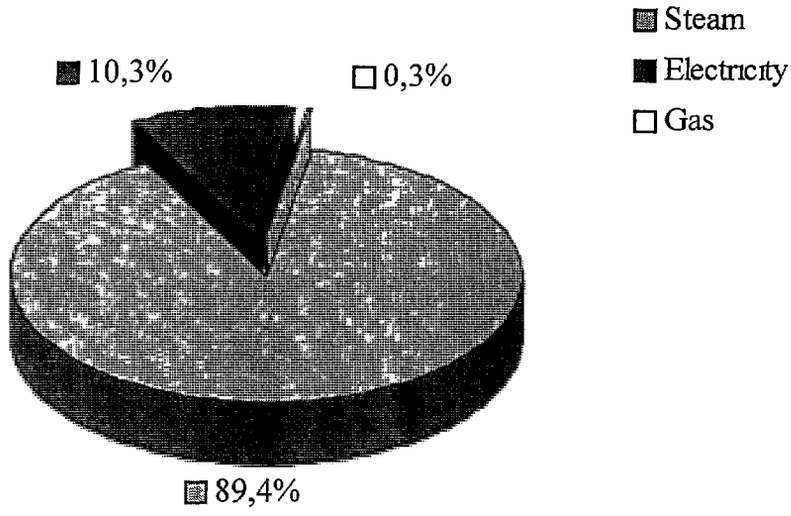

Fig 5 1 Breakdown of energy use in 1996

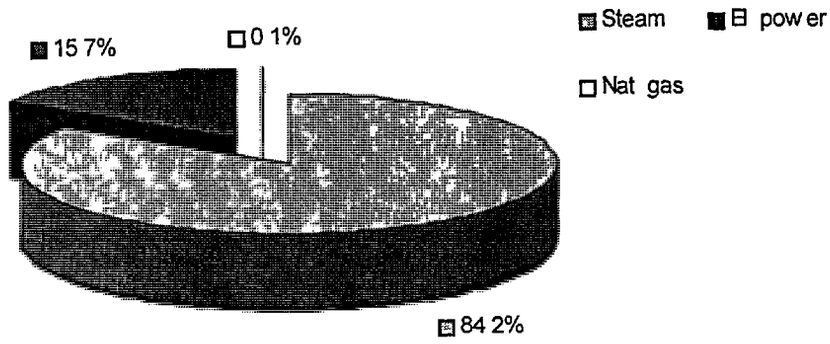

Fig 5 2 Distribution of annual energy costs US$

	Thermal energy consumption, Gcal		
Month	**1995**	**1996**	**1997**
January	3379	3565	3831
February	4285	3391	2714
March	3377	3951	2730
April	4050	3334	2645
May	3886	3128	2156
June	5716	4846	5151
July	5661	3252	4693
August	5156	5444	4746
September	3771	3953	3843
October	3064	3561	2364
November	2870	1954	
December	2203	2013	

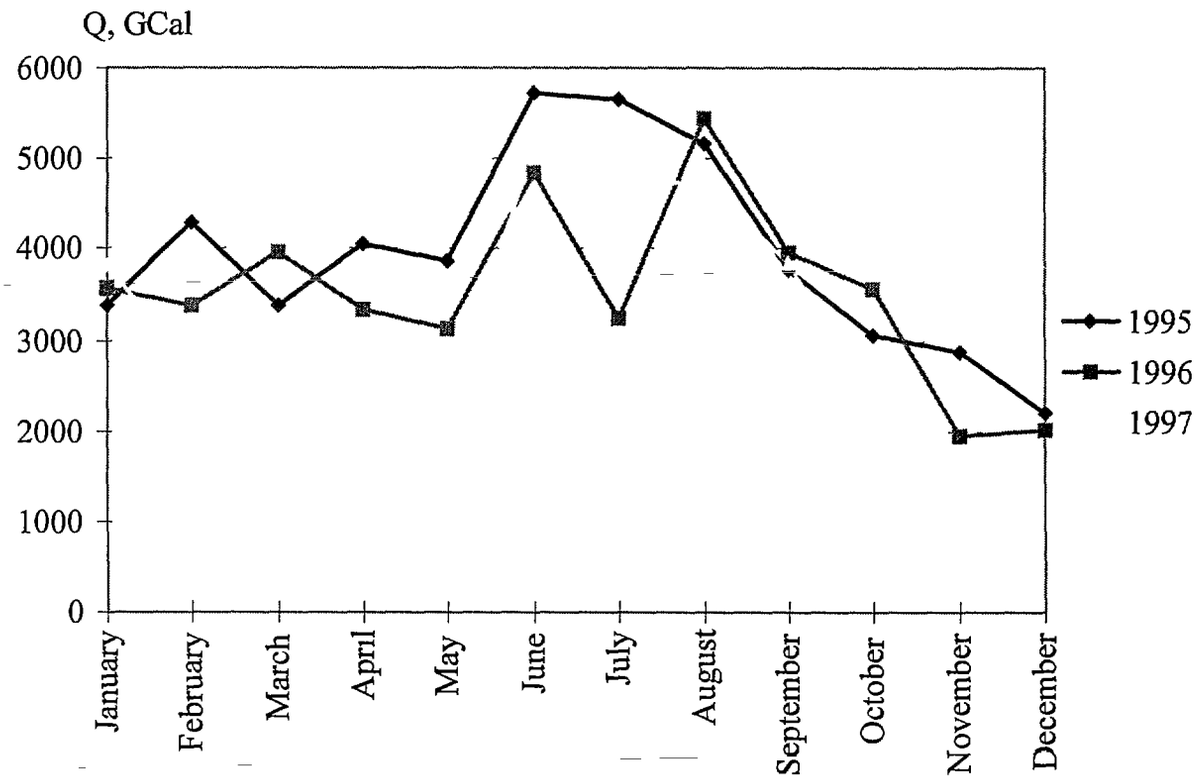

Fig 5 3 Thermal energy in Gcal received from sugar plant boiler room

	Electricity use, thou kWh	
Month	**1996**	**1997**
January	299 715	299 906
February	270 334	277 795
March	445 117	432 737
April	476 773	460 929
May	615 757	492 845
June	672 497	592 334
July	594 048	739 581
August	726 248	871 974
September	530 464	813 565
October	460 718	
November	329 830	

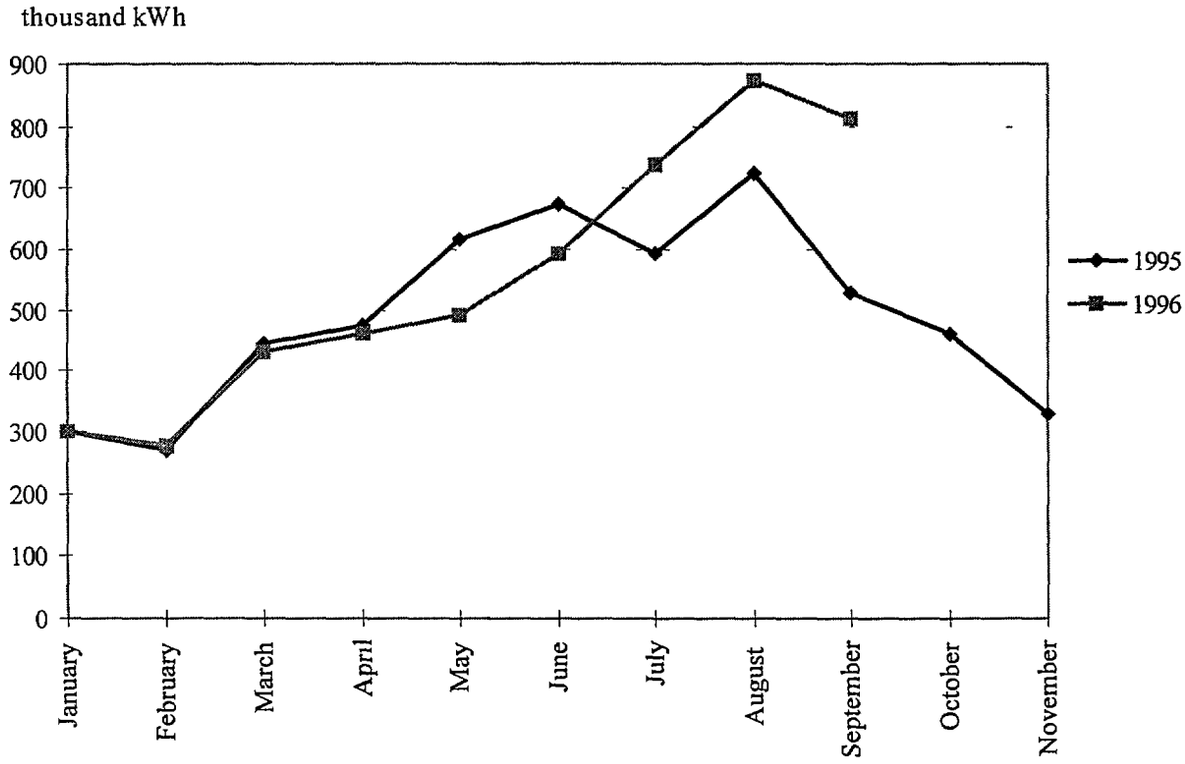

Fig 5 4 Electric power use

5.2. Current tariffs for fuel and energy

The plant pays approximately US$1 million annually for its energy consumption Energy costs run approximately 10 to 12 percent of the total production cost Therefore, energy efficiency measures can make a significant impact on the plants bottom line

The steam supplied is in a superheated state and so the charges are based on energy content The Kpyansk milk plant pays a flat charge of Hr 40 per Gcal (US$22 per Gcal) for superheated steam According to the plant management the price for the steam is too high They have tried to renegotiate the price with the sugar plant management but have had little success The steam supply is also unreliable The steam pressure varies and at times drops below the minimum needed at the milk plant This results in downtime and loss of products in process at the time the steam supply is disrupted Both the high cost and the unreliable nature of the steam supply are a major concern of the plant management Also, the sugar plant is not doing well financially and the gas utility has threatened to cut off the natural gas supply due to non-payment This creates a risk for the milk plant in the long run These issues are a real threat to the future viability of the milk plant and the management is seriously trying to address this problem One option they feel will reduce their risk, improve productivity and save them in energy costs is the installation of their own modular boilers dedicated to each of the three productions units in the plant This report contains a preliminary evaluation of this option

The electric rate structure is what is known in Ukraine as the two-part tariff The plant contracts a maximum amount of monthly consumption and demand based on anticipated need and pays a fixed electric rate for actual consumption that does not exceed this maximum contract limit If the plant exceeds the maximum consumption limit, then the excess amount is billed at ten times the fixed rate of the contracted amount The contracted electrical rate is Hr 0 055 per kWh (US$0 03 per kWh)

There is also an electric demand charge which applies during the on-peak periods of 8 am to 10 am and 6 pm to 8 pm However, the enforcement mechanism for limiting demand is weak relying on random on-site inspections by the utility and so is not a factor in the cost of electricity to the plant Similarly, there is also a limit on the reactive power the plant can use, and again according to the plant staff this limit is set quite high and so the plant has never exceeded it

Average cost of 1 kWh according to the plant staff was US$0 044 in 1996

5.3. Energy use profile

The total production output in 1995, 1996 and for the first ten months of this year is shown in Table 3 1

The plant does not submeter steam or electric consumption so it is difficult to account accurately for the changes in the plants overall specific energy use However, by looking at the change in consumption of steam and electricity in the corresponding months from 1996 to 1997 and comparing these with the changes in production output given in Table 5 2 it becomes clear that powdered milk production is a more energy intensive process in terms of both electricity and steam

Even though the output of whole milk products, butter and condensed milk actually rose the specific energy consumption went down from 1996 to 1997 Since powdered milk output dropped by 62 percent the corresponding reduction in energy use overshadows any energy use increases associated with the output of the other three lines of products Therefore, powdered milk production is an important energy consumer and should be the focus of energy efficiency improvements in the future if demand and production rises Currently this plant is operating at a very low capacity and so it operates for a short time in the summer months

The low operating hours make energy efficiency investments less cost effective at this time

Table 5 2 Production Output

Product	1996	1997 (1)	% Change
Butter, tonnes	1,087	1,800	66
Condensed Milk, thousands of standard cans	7,476	9,000	20
Powdered Milk, tonnes	836	320	-62
Whole Milk Products, tonnes	5,932	7,000	18

(1) Data for first ten months only

Another factor that contributes to a lower specific consumption of steam in 1997 is the fact that steam use for space heating in the months of November and December is not included in the total steam use in 1997 and since most of the production takes place during the summer months the denominator becomes relatively higher and leads to a lower specific energy consumption

Developing an energy use profile that would show how the energy was being used in the plant was a challenge since there are no submeters installed in the plant The only meters installed at present are at the electricity and steam mains entering the plant complex The steam meter is actually located some 620 meters away in the sugar plant boiler room while the electric meter is located in the milk plant

The plant staff did not have estimates of the breakdown in the end use of steam by either process or product line Currently these estimates are made by the plant economic personnel on the basis of specific use standards and production output The results of fuel and energy use are reflected in the state statistical reporting form No11 MTP "Report on the results of fuel, thermal energy and electric power use" (See Appendix D)

Years	Total	Canned milk	Other	Butter	WMP
1995	40 6	22 4	13 6	3 9	0 7
1996	32 68	24 1	4 45	3 5	0 63
1997 (9 months)	28 55	19 3	3 95	4 87	0 43

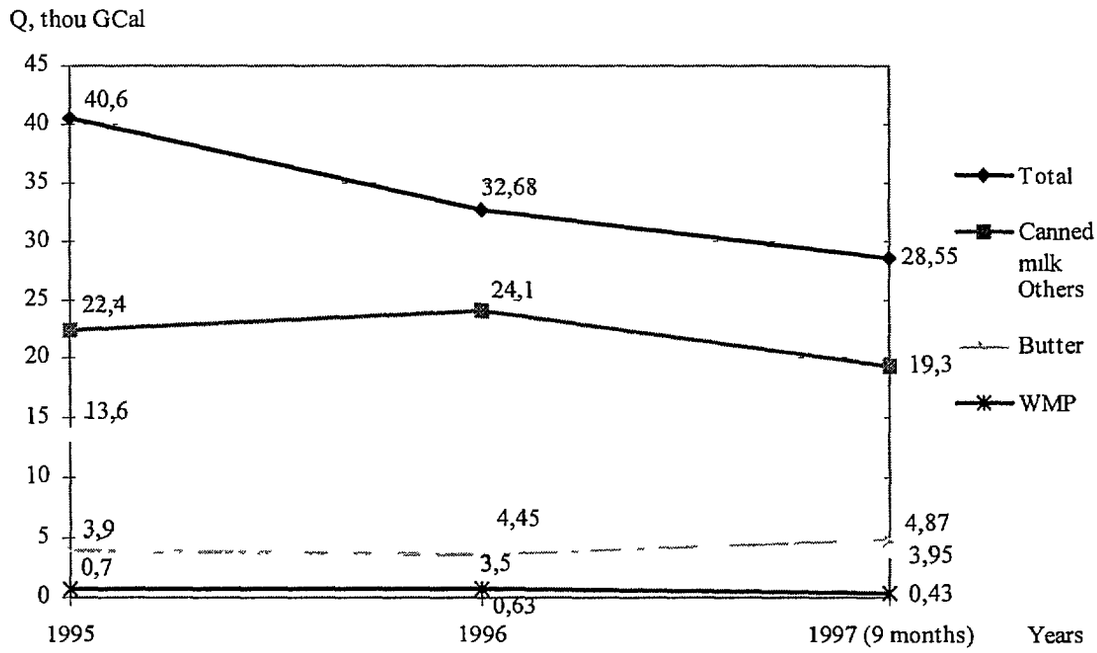

Fig 5 5 Dynamics of thermal energy use by types of products in 1995-1997

Years	Total	Refrigeration	Other	Canned milk	Butter	WMP
1995	5 51	3 18	1 38	0 76	0 1	0 09
1996	5 69	4 35	0 35	0 82	0 09	0 08
1997 (9 months)	4 95	3 77	0 16	0 84	0 12	0 05

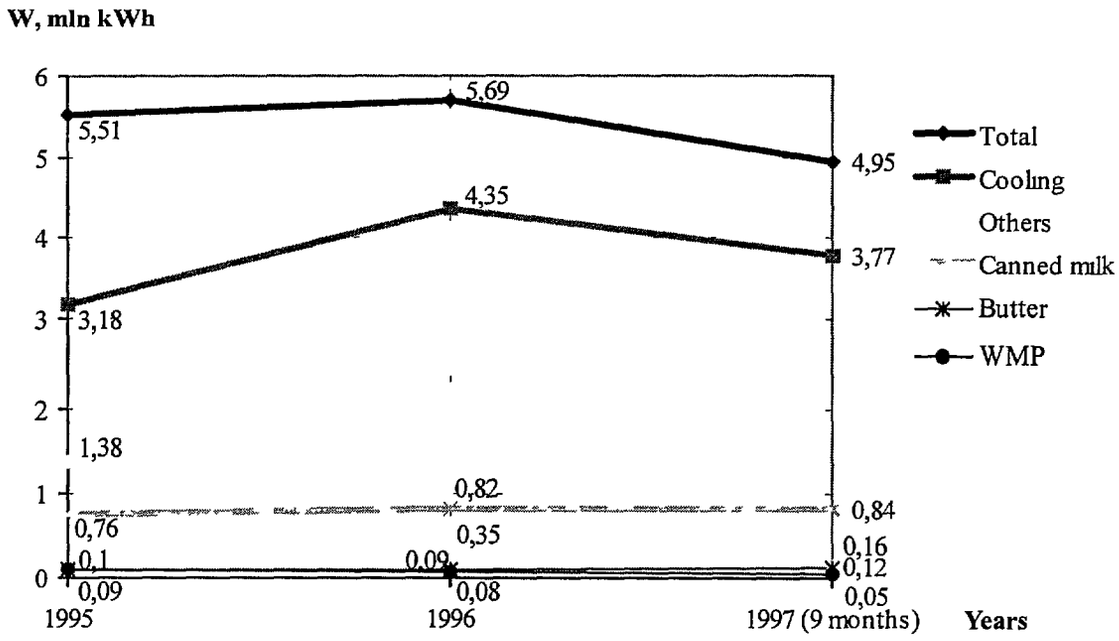

Fig 5 6 Dynamics of electric power use by types of products in 1995-1997

6. PREVIOUS ENERGY IMPROVEMENTS

According the plant staff some energy conservation improvements have been made at the plant over the last two years

In 1996 the steam to the vacuum units in the condensed milk plant was left on even at night when the units were not being used The operators were instructed to close off the steam valves whenever the equipment was not in use to stop unnecessary waste of steam

1 The space heating system was converted from steam to hot water The high temperature steam led to overheating and energy waste This waste was reduced by converting to hot water

2 In the powdered milk workshop in the vacuum units the vacuum was built up by steam injector with steam pressure of 12 kg/cm^2 and steam consumption of 3 15 tonnes per hour In 1997 the steam injector was replaced with vacuum pump They are test-running the system If the results are successful similar replacement will take place in the condensed milk plant

Other energy saving improvements that the plant is aware of but has not implemented yet include

1 Improvement of the insulation of the 620 meter long 219 mm diameter main steam supply piping from the sugar plant This measure has not been implemented because the plant is interested in installing their own boilers and so are reluctant in invest in this option at this time

2 The plant management feels that installing their own modular boilers will improve the plant thermal energy efficiency significantly, and are interested in evaluating this option in more detail

One problem has been the lack of extensive as well as sustained efforts in energy conservation Most of the past energy saving efforts have been conducted on a case-by-case basis without any energy saving management plan in place to systematically look for energy saving opportunities in all energy using areas of the plant Hence, a lot of energy saving opportunities in the general operation and maintenance have been overlooked There is also no in-house energy-efficiency engineer which makes it difficult to carry on the energy conservation efforts

7. ENERGY AUDIT

Analysis of energy use by the plant shown in Section 5 of this report study of actual energy usage resulted in development of energy conservation opportunities listed below They will reduce electricity consumption by 649,5 thousand kWh (11 4% 0f 1996 consumption), thermal energy by 18 6 thousand Gcal (56 8%)

7.1. Short-term ECO

ECO#1 INSTITUTION OF AN ENERGY MANAGEMENT PLAN

No formal energy management plan currently exists that will reduce losses related to operation and maintenance

Hence, there exists a great opportunity in the plant to improve its energy-efficiency through simple energy management measures which are low-cost in nature and will have immediate payback to the plant

A key to the successful implementation of an energy management plan is the appointment of an energy-efficiency manager or committee whose primary role is to focus on improving energy-efficiency Appointing an individual who is both knowledgeable and motivated by energy-efficiency issues will be a major step in saving energy at the plant This individual should

- have a technical background with a firm understanding of steam and electrical energy systems
- be able to work well with both plant workers in identifying operation and maintenance type energy-efficiency opportunities and also be able to communicate these energy savings opportunities to the management
- be able to provide training to the plant workers on more energy-efficient practices and also to help motivate them to implement such measures throughout the plant
- be able to develop an energy management plan for making energy-efficiency improvements over a 5 to 10 year period

Such a position currently does not exist It is therefore recommended that the plant appoint an energy manager who can steer the plant toward a more energy-efficient use of energy

The following energy management type of improvements were found during the energy audit and could be used as a starting point for implementing a more comprehensive plan

1 Metering of Energy Consumed by the Whole Milk Products Plant,

2 Weather Stripping of Doors and Windows,

3 Improvement of energy-efficiency of cold storage rooms

4 Thermal energy and cooling waste monitoring

Since the plant pays approximately US$1 million annually in energy bills even just 2 percent savings would result in US$17,000 savings annually This is equal to reductions in thermal energy use by 6540 Gcal and by 108,000 kWh in electric power

The simple payback for instituting an energy management plan is 0 38 year (4 6 months)

See details in Appendix A1, ECO #1

ECO # 2 THERMAL INSULATION OF CENTRAL STEAM DISTRIBUTION UNIT PIPING

During the inspection of the steam distribution system it was established that despite thermal insulation of main steam pipelines several branch pipes of the central steam distribution unit and condensed milk canning workshop do not have such insulation

The central steam distribution unit receives superheated steam from the sugar plant boiler room with the following parameters pressure - 30 kg/cm^2 , temperature - 400 °C After reduction the

pressure is lowered to 12 and 5 kg/cm^2 Annually the steam is consumed over 80 hours a week, 52 weeks a year on average

We recommend that the steam piping should be fully insulated Presently it is realistic to cut down thermal waste in steam piping by application of modern efficient thermal insulation materials like cellular plastics, Styrofoam and other materials with thermal conductivity of 0 03 - 0 05 Ccal/(meters x hours x ^{0}C) We assume the use of the above materials

As the result of implementation of this ECO there is a possibility to decrease the steam use by 74 5 Gcal per year Annual savings will amount to US$1,640 per year

Simple payback is 0 55 year

See details of this ECO in Appendix A2, ECO #2

ECO #3 RECOVERY OF CONDENSATE FROM WHOLE MILK PRODUCT WORKSHOP

The condensate generated from the steam supplied to the whole milk products is drained to the sewer system The temperature of the condensate was measured to be 78 degrees C at the point where it was being discharged to the sewer drain The plant staff estimates that a total of 6,570 tons of condensate is generated by the whole milk products workshop Sensible heat can be recovered from 83% of this condensate as a source hot water for domestic use The remaining 17 percent is lost as flash steam

It is recommended that a condensate receiver tank be installed in the whole milk products workshop and piping be installed from the process equipment to route the condensate to this tank The condensate is then pumped over to the steam distribution room to the existing domestic hot water tanks The condensate pump is controlled by a float level in the new condensate receiver tank The new receiver tank and associated piping will be insulated The arrangement is shown in Fig A 3 1

Money savings will be US$8,100 or equal to 369 Gcal per year

Simple payback is 2 62 years

See details of this ECO in Appendix A3, ECO #3

ECO #4 AUTOMATIC CONTROL OF DEEP WELL PUMPS

The sources of potable water at the enterprise are 2 deep wells in which ETZV 8-25 deep well pumps are installed each with 25 m^3/hour capacity The pumps fill a 350 m^3 storage reservoir

Reservoir filling is controlled visually with the help of a float level that leads to accidental overfilling of the reservoir

We recommend to install a pump automatic control appliance depending on the level of water in the reservoir which will prevent overfilling

Money savings in case of prevention of deep well water losses will amount to US$1,950 Simple payback period is 1 04 years

See details in Appendix A4, ECO #4

ECO #5 AUTOMATIC CONTROL OF COLD WATER SUPPLY PUMPS

Cold water supply is from the plant deep well via a 350 m^3 storage reservoir In the pumping unit there are 3 network pumps of 4K6 type with electric motor P=11 KW Pressure in the supply system p=4 kg/c m^2

On the basis of the pump operation log filled out by operation personnel and analysis of the work schedule and district water supply we can assume on average that half a day pump works at water consumption level equal to one half of nominal capacity, 3 hours - equal to full nominal capacity, 4 hours a day two pumps operate at water consumption level equal to nominal capacity, 1 hour - 2 pumps operate at water consumption level equal to a half of nominal capacity Operation at modes when water consumption does not correspond to the nominal capacity causes power overuse

We recommend to drive cold water pumps via frequency regulated speed drive of ***REN - 11*** type manufactured by the Kharkiv association "Energosberezhenie" which automatically ensures water pressure in the network and pump capacity in compliance with water consumption

Electric power savings per year will be 39,128 kW/h

one y savings will be US$1,722 per year

Simple payback period will be 1 48 year

See details in Appendix A 5, ECO #5

ECO #6 OPTIMIZATION OF HOT WATER SUPPLY PUMP OPERATION - INSTALLATION OF RECEIVER TANK

There are three pumps installed in parallel that serve the domestic hot water system The pumps are 7 5 kW, 11 kW and 15 kW each The 7 5 kW and 11 kW pumps are operated 24 hours a day, 365 days a year This leads to energy waste because the hot water demand drops significantly during the night time when the plant is idle but the pumps continue to run and unnecessarily overpressurize the piping

It is recommended that a timer controller be installed that will allow sequencing of the pumps to match the hot water demand and eliminate excess pumping during periods of low demand that ensures savings of 53000 kWh of electric power per year

Money savings will be US$2,333 per year

Simple payback period will be 4 months

See details in Appendix A 6, ECO #6

ECO #7 REDUCTION OF COMPRESSED AIR LOSS IN OIL AND MOISTURE SEPARATION

At the enterprise compressed air is supplied by plant compressor unit equipped with 2 compressors of 2VM 2,5-14/9 type with 90 KW motors and 1 compressor of 302VM-108/U4 with 75 KW motor

The sore point of the compressor unit is impossibility to operate the compressed air dehumidifying system due to contamination of silica gel with oil The situation is aggravated by growing danger of explosion of oil settling down in the piping as the result of cracking process and self-inflammation which drives the plant to intensively purge the piping that requires up to 10% of produced compressed air

We recommend to install automatic oil and moisture separator of MV-3 type with moisture trap manufactured by the Black Sea shipyard In case of implementation of this proposal the compressed air use for purging will be reduced, the reliability of the dehumidifying system will be ensured, electric power savings will be up to 3% or 4,000 kWh per year

Money savings at the price of US$0 044 per 1 kWh will amount to US$180 7 per year

Simple payback period is 1 31 year

See details in Appendix A7, ECO #7

ECO #8 AUTOMATIC ENERGY USE METERING

Steam use metering at the plant is currently carried out by the flow meter installed at the sugar plant boiler room

Once a month the bills are to be paid considering negotiated price of US$22 per 1 Gcal

Electric power is supplied to the plant via 10 kV cable and then distributed among workshops with voltage of 0 4 kV

At each transformer unit two three-phase electric meters are installed thus there 8 metering stations altogether Each month the meter readings are taken manually and the used electric power is paid for Considering the negotiated demand charge at US$3 5 per 1 kW current average price per 1 kWh is US$0 044

Detailed study of the plant has shown that calculation of steam, electric power, gas, compressed air, cold and hot water consumption by separate production units is made with the help of standard indicators and actual production output Instrumented submetering of energy is absent

We recommend to automate commercial and technological metering with the ITEK energy metering and control equipment which is certified in Ukraine

In order to implement the ECO it is being planned to set up automatic metering of electric power use at 8 stations and commercial steam metering at one point

Technological metering of steam will be implemented at 6 points, of hot water - at 3 points, of cold water from deep wells - at 2 points

Money savings will be US$30,000 which is equal to the energy savings of 980 Gcal of thermal energy and 160,000 kWh of electric power

Total costs will be approximately US$61,000

Simple payback period is 2 1 years

See details in Appendix A8, ECO #8

ECO #9 AUTOMATIC TEMPERATURE CONTROL IN COLD ROOMS

One of the major users of electric power at the plant is refrigeration which takes up around 75% of total energy use

Refrigeration equipment is not equipped with product cooling temperature control systems

The control is centralized at the compressor house using the temperature of the returned ice (chilled) water The basic control direction is maintenance of the maximum chilling temperature that leads to overuse of cooling and electric power to generate it

We recommend to install within the primary refrigeration system and large end-use facilities (cold rooms) cooling temperature controls Among these are the following tanks with coolers of Ya10SV-10 type at the butter unit, milk preparation unit, cottage cheese unit, condensed milk and powdered milk workshops, air coolers and hydrogenated fat coolers at the powdered milk workshop

Money savings will be US$12,500 or equal to 284,300 kWh of electric power

Total implementation costs will be approximately US$11,120

Simple payback period is 0 9 year

See details in Appendix A9, ECO #9

7.2. Long-term ECO

ECO #10 DECENTRALIZATION OF THERMAL POWER SUPPLY

The Kupyansk milk canning plant is supplied with thermal energy as superheated steam from the Kupyansk sugar plant with the following parameters pressure - 30 kg/cm^2, temperature - 400°C then reduced to 12 and 5 kg/cm^2 The length of steam pipeline from sugar plant to the steam distribution unit (SDU) of the milk plant is 620 m, diameter is 219 mm

It has been calculated that at the thermal energy consumption level in 1996 of 42392 Gcal the losses were Q_1 = 2458 7 Gcal/year It should be noted that these losses will grow with the aging of insulation and network

One of the primary requirements of milk processing technology is reliability of steam supply The drop of gas pressure below nominal values or complete cut-off causes automatic shutdown of production and start of machinery washing According to the data from the plant each year sudden cut-offs of steam supply from the sugar plant occur which in 1997 have already amounted to 156 hours In 1996 the losses at the milk plant were approximately 145 Gcal/year

The enterprise receives from production lines annually around 48 7 thousand tonnes of condensate which is not returned to the boiler unit

Instead of the existing system of thermal energy supply from the sugar plant boiler room we recommend to build own boiler unit at the plant consisting of 3 steam boilers of modular design with capacity of 10 tonnes of steam per hour and 1 water boiler of 2 5 Gcal/hour capacity for hot water supply Efficiency of the proposed equipment is $\mu = 91\%$

The calculations have shown that implementation of such recommendation conceptually changing the energy supply character of the plant will lead to the savings in thermal energy and gas and also to substantial reduction of losses in production from interruptions in steam supply Assuming the cost and commissioning of a new boiler unit of US$1050 thousand the payback period will be 2 9 years Reduction of thermal energy use is 16,488 Gcal per year

See details in Appendix A10, ECO #10

8. ENVIRONMENTAL IMPACTS OF RECOMMENDATIONS

The most efficient way of reduction of hazardous emission in the atmosphere is the decrease of fuel and electric power use, thus the introduction of the above mentioned recommendations is vital also from the environmental standpoint In this sections calculations have been made supporting opportunities of natural gas and electric power savings

Thermal energy savings from implementation of the proposed measures for the entire plant will amount to

ECO #1 - S_1 = 650 Gcal per year

ECO #2 - S_2 = 74,5 Gcal per year

ECO #3 - S_3 = 369 Gcal per year

ECO #8 - S_8 = 980 Gcal per year

ECO #10 - S_{10} = 16,488 Gcal per year

Total energy savings will be

$S_{sum} = S_1 + S_2 + S_3 + S_8 + S_{10} = 650 + 74\ 5 + 369 + 980 + 16{,}488 = 18{,}561\ 5$ Gcal per year

Thermal energy savings calculated in the terms of natural gas we determine by the following equation

$S_{gas} = S_{sum} \times b/k = 18{,}561\ 5 \times 156\ 93/1\ 16 \times 10^{-3} = 2511$ thousand cubic meters

where b - specific fuel use for generation of 1 GCal of thermal energy with the 91%-efficient boilers proposed in ECO #10,

k - calorie equivalent of conversion of standard fuel into natural gas

Natural gas combustion leads to emission into the atmosphere of carbon oxide CO and nitrogen oxides NO_X

The amount of prevented emission we determine in compliance with the "Methodological instructions for calculation of emission of pollutants in the course of fuel burning in the boilers with the capacity below 30 tonnes per hour" by the equations

- carbon oxide emission - $M_{CO} = 0\ 001 \times q_3 \times R \times Q \times B \times (1 - q_4/100) = 0\ 001 \times 0\ 15 \times 0\ 05 \times 36\ 72 \times 2511\ (1 - 5/100) = 6\ 77$ tonnes per year,
- nitrogen oxide emission - $M_{NOx} = 0\ 001 \times B \times Q \times K_{NOx} = 0\ 001 \times 2511 \times 36\ 72 \times 0\ 107 = 9\ 88$ tonnes per year

where Q - lower heat of natural fuel combustion, MJ per cubic meter,

B - fuel consumption, thousand cubic meters per year,

q_3, q_4 - heat waste due to chemical and mechanical incomplete combustion respectively, %,

R - factor taking into account a share of heat loss due to incomplete combustion caused by the presence of CO in combustion products,

K_{NOx} - parameter that characterizes presence of nitrogen oxides generated per 1 GJ of heat, kg per GJ

The results of calculations are shown in Table 8 1

Electric power savings from implementation of the proposed measures for the entire plant will amount to

ECO #1 - W_1 = 108 thousand kWh,

ECO #4 - W_4 = 1 16 thousand kWh,

ECO #5 - W_5 = 39 1 thousand kWh,

ECO #6 - W_6 = 53 thousand kWh,

ECO #7 - W_7 = 4 thousand kWh,

ECO #8 - W_8 = 160 thousand kWh,

ECO #9 - W_9 = 284 3 thousand kWh

Total electric power savings will be

$$W_{sum} = W_1 + W_4 + W_5 + W_6 + W_7 + W_8 + W_9 = 108 + 1\ 16 + 39\ 1 + 53 + 4 + 160 + 284\ 3 = 650$$

thousand kWh per year

According to the data of the Ministry of energy of Ukraine average emissions from generation of 1 thousand kWh were as follows

emissions of solid particles - 4 4 kg,

carbon oxide CO - 0 5 kg,

nitrogen oxides NO_X - 2 2 kg,

sulphur oxides SO_2 - 9 9 kg

The results of prevented pollutant emission into the atmosphere through electric power savings are given in Table 8 1

Table 8 1 Summarized indicators of prevented pollutant emission into the atmosphere as the result of proposed ECO implementation

Type of emission	Reduction through thermal energy savings	Reduction through electric power savings	Total reduction per year
Solid particles, tonnes		2 86	2 86
Carbon monoxide, tonnes	6 7	0 33	7 03
Nitrogen oxides, tonnes	9 88	1 43	11 31
Sulphur oxides, tonnes		6 43	6 43

Thus implementation of proposed measures will cut down pollutant emission into the atmosphere by 27 63 tonnes that will certainly improve ecological situation in the town of Kupyansk

APPENDIX A. ENERGY CONSERVATION OPPORTUNITIES (ECO)

A 1 ECO#1 INSTITUTION OF32 AN ENERGY MANAGEMENT PLAN

ECO description

No formal energy management plan currently exists that will reduce losses related to operation and maintenance Hence, there exists a great opportunity in the plant to improve its energy-efficiency through simple energy management measures which are low-cost in nature and will have immediate payback to the plant

A key to the successful implementation of an energy management plan is the appointment of an energy-efficiency manager or committee whose primary role is to focus on improving energy-efficiency Appointing an individual who is both knowledgeable and motivated by energy-efficiency issues will be a major step in saving energy at the plant This individual should

- have a technical background with a firm understanding of steam and electrical energy systems,
- be able to work well with both plant workers in identifying operation and maintenance type energy-efficiency opportunities and also be able to communicate these energy savings opportunities to the management,
- be able to provide training to the plant workers on more energy-efficient practices and also to help motivate them to implement such measures throughout the plant,
- be able to develop an energy management plan for making energy-efficiency improvements over a 5 to 10 year period

Such a position currently does not exist It is therefore recommended that the plant appoint an energy manager who can steer the plant toward a more energy-efficient use of energy

The following energy management type of improvements were found during the energy audit and could be used as a starting point for implementing a more comprehensive plan

1 **Metering of Energy Consumed by the Whole Milk Products Plant** Only total steam, natural gas and electricity use are presently being metered There is no submetering at the plant There are four main production units or plants at the Kupyansk milk plant whole milk products, condensed milk, powdered milk and can making Each of these units produces different items with differing energy needs However, since there is no submetering it is rather difficult for the plant to know how the energy is being consumed at the plant Moreover, without this information its difficult to know which production unit may be operating efficiently and which one needs to be improved through energy saving measures

To demonstrate the benefits of energy submetering as a basic energy management tool its recommended that the Whole Milk Products Unit be fitted with a steam and electric submeters The energy consumption data will then allow the plant to compare its efficiency with similar whole milk product plants located in western countries and if necessary take steps to improve efficiency Also, the steam meter will allow the plant to estimate the steam savings from installation of the condensate recovery unit discussed in this report as an ECO It will be left up to the plant to add submeters to the other three plants in the near future

2 **Weather Stripping of Doors and Windows** The large doors located for example in the raw milk unloading area and the truck repair garage have anywhere from ½ an inch to 2 inches of air gaps These gaps allow cold winter air to freely infiltrate into the heated space The gaps are so large, in the truck garage for example, that it is difficult for the heating radiators to maintain comfortable working temperatures During the audit the average inside temperature inside the truck garage was measured to be 8 degree C (45 degree F) while the outside temperature was 1 degree C (34 degree F)

Another way that energy waste can be reduced in the truck repair garage is through the use of a flexible exhaust hose that would enable the garage doors to remain closed when they test run the engine of the trucks Currently, the garage doors are kept open when the truck engines are started

to prevent the exhaust fumes from building up inside the garage But this wastes a lot of energy as all the space heat is lost It is recommended that a small opening with a self closing flap be created in each of the large garage doors A flexible exhaust hose could then be extended from the truck exhaust tail pipe and inserted through this opening to direct the truck exhaust fume straight to the outdoors This will eliminate the need to have the large garage doors from having to be kept open when the truck engines are test run in the garage The self closing flap would shut and prevent outside air from infiltrating into the garage space when the truck engine is not running

Similarly, many windows are not tightly constructed Gaps can be seen along the frame and the masonry opening These gaps allow cold air to infiltrate into the heated space in the winter and thereby increase the load on the heating system Some areas, such as in the truck garage, had broken windows These are a major source of infiltration and energy waste It is recommended that the window glass be replaced or if this is not easily done then the opening should be closed with some other appropriate material as a temporary measure

3 **Improvement of energy-efficiency of cold storage rooms** There are four main cold storage rooms with the temperature requirements indicated in the table A1 1 below

Table A 1 1 **Temperature Requirements of Cold Rooms**

Cold Rooms	Temp Set Point deg C
Butter	-2 to -4
Sour Cream/Cheese	-2 to +2
Whole Milk Products	+4 to +6
WMP Delivery Dock	+4 to +6

Four energy saving measures can be implemented that will help to reduce energy waste in the cold rooms and are discussed below The first three focus on minimizing infiltration of warmer and more humid outside air into the cold rooms, especially during the summer months, and the fourth is a lighting energy saving measure

(a) Reduction of Infiltration Since the cooler air is denser it has a natural tendency to "spill out" when the doors are opened The lost cold air is made up by the warmer surrounding air infiltrating into the cold rooms This warmer air then has to be cooled by the refrigeration system Also, the surrounding air usually has a higher moisture content This moisture condenses out when the air comes in contact with the refrigeration coil This condensed moisture eventually starts to freeze on the evaporator coil surface since the temperature of the refrigerant in the coil is below freezing temperature This ice built up on the coil reduces the cooling efficiency of the coil resulting in higher energy use at the compressor

Cold air is lost continuously through the gaps in the cold doors and also when doors are opened to load/unload goods Although infiltration losses cannot be totally eliminated significant reductions can be made with the following three recommendations

(i) Weatherstripping of Cold Room Doors It was observed that the cold room doors do not shut tightly There were visible gaps when the doors are closed The cool air is constantly leaking out of the cold rooms as a result The doors should be weatherstripped to provide a tighter closure and minimize loss of cold air

(ii) Re-scheduling of Fork Lift Operations The whole milk products (WMP) loading dock door are opened to allow fork lift machines to enter the cold room for loading/unloading operations The doors are kept open during these periods and significant amounts of cooling energy is wasted

It is recommended that the operations of the fork lift machines be modified to minimize the number of times the fork lifts have to go in and out of the cold room and also minimize the time the that doors are kept open To the extent possible, any in-plant transfer operations or delivery using the plant's own trucks should be scheduled during times of the day when the outside air temperature is milder, for example, morning hours

(iii) Installation of Plastic Curtains in Cold Rooms At present there are no barriers to minimize the cold air lost during the loading and unloading operations when the doors are kept open

It is recommended that plastic curtains be installed at the doors to create a vestibule barrier against infiltration when the doors are opened during loading/unloading operations The barrier will significantly reduce the loss of cold air when the doors have to be kept open By minimizing loss of cold air from the rooms the cooling load and hence the compressor run-time will be reduced

(b) Installation of Automatic On/Off Light Switch for Cold Rooms Presently there are three 100 W incandescent lamps that were observed to be left on at all times in the butter and whole milk products cold rooms It is recommended that a mechanical door switch be added that will automatically turn off the lights when the cold room doors are closed

4 **Thermal energy and cooling waste monitoring** thermal insulation of equipment wears out due to various reasons that cause to heat loss It is recommended to monitor thermal energy and cooling wastes using ***Raytek PM3L3SZ*** infrared non-contact thermometer

Energy Savings Estimate

It is difficult to estimate the energy savings from individual energy management measures, but its not unreasonable, based on experience in the US, to expect savings anywhere from 1 to 5 percent of the plants total energy use Since the plant pays approximately US$1 million annually in energy bills even just 2 percent savings would result in US$20,000 savings annually

Implementation and commissioning costs

The costs are of two types One is a recurring cost for the salary of the energy-efficiency manager and the other is the capital cost associated with implementing the recommendations above The impact of the salary would be to lower the annual savings, however, this should not be seen as eating away the savings but as an investment because the benefits of an energy-efficiency manager more than outweigh the costs in the long run

Table A 1 2 Cost Estimates for ECO-1 Recommendations

Item	Cost, US$
1 Meters for the Whole Milk Products Plant	
• Thermal	$1,000
• Electricity	$1,000
2 Weatherstripping for Doors and Windows	$1,000
3 Improve Energy Efficiency of Cold Rooms	
• Weatherstripping of Cold Room Doors	$100
• Rescheduling Fork Lift Operations	0
• Installation of Plastic Curtains	$1,500
• Installation of Automatic Light Switch	$200
4 Steam and cooling waste monitoring	$1600
Total	**$6,400**

Most of these measures can to be implemented in-house by the plant staff Therefore, the labor costs are not included here

Simple payback estimate

The typical salary for an energy-efficiency manager in Ukraine is US$3,000

The simple payback for instituting an energy management plan is

SP = $6,400 / ($20,000-$3,000) = 0 38 years (4 6 months)

A 2 ECO#2 THERMAL INSULATION OF CENTRAL STEAM DISTRIBUTION UNIT

ECO description

During the inspection of the steam distribution system it was established that despite thermal insulation of main steam pipelines several branch pipes of the central steam distribution unit and condensed milk canning workshop do not have such insulation Details of non-insulated piping are given in Table A 2 1

Table A 2 1

Purpose of piping	Location	Length, L m	Diameter, D mm	Number of valves	t, °C
1 Steam	Steam distribution unit	8	102	1	110
2 Steam	Steam distribution unit	3	219	2	170
3 Steam	Canning w/shop	2	50	3	110
4 Steam	Canning w/shop	3	76	3	176
5 Steam	Canning w/shop	4	89	1	183
6 Steam	Canning w/shop	4	76	1	156

The central steam distribution unit receives superheated steam from the sugar plant boiler room with the following parameters pressure - 30 kg/cm^2 , temperature - 400° C After reduction the pressure lowers to 12 and 5 kg/cm^2 Table A 2 1 shows temperatures based on actual measurements of outer walls of steam piping

Annually the steam is consumed 80 hours a week, 52 weeks a year

We recommend that the steam piping should be fully insulated The thickness of insulation should be selected dependent on the piping diameter and its purpose (Table A 2 2)

Table A 2 2

Purpose	Diameter, mm	Insulation thickness, mm
1 Steam	102 - 219	100
2 Steam	50 - 89	80

Annual energy savings estimate

We should determine thermal energy waste for insulated and non-insulated pipes according to the methodology below [Methodological instructions for determination of losses of fuel and energy resources RD5 EDIV 015-008094 Minmashprom, Kiev, 1994]

Thermal energy waste in non-insulated pipelines (Ccal/hour) is determined by the following formula

$Q_{nin} = g_{nin} \times L_o \times k,$

where g_{nin} - specific losses of non-insulated piping (Ccal/meter x hour),

k - correction factor depending on the outside temperature and difference between pipe outer wall and outside temperatures,

L_o - given length of piping, m

$L_o = L + (1m \times n)$

n - number of valves within the section

For the pipeline #1 from Table A 2 1 we have

$Q_{nin1} = 300 \times 9 \times 0\ 95 = 2565$ *Ccal/hour*

Further calculations were carried out similarly and are summarized in Table A 2 3

Thermal energy waste of insulated (Ccal/hour) pipelines is calculated by the formula

$Q_{in} = g_{in} \times (t_1 - t_2) \times a \times b \times L_0$

where g_{in} - specific loss over 1 meter of piping with the difference $(t_1 - t_2) = 1\ ^0C$ depending on the thickness of insulation ,

t_1 - temperature of pipe walls assumed as equal to temperature of heat carrier, °C,

t_2 - temperature of air, °C,

a - correction factor depending on the thickness of insulation, thermal conductivity of insulation material and temperature difference between heat carrier and air With insulation thickness up to 100 mm and temperature difference up to 300 °C $a = 1$ [1],

b - wind correction factor (with wind velocity of 5 m/sec) [1, Table 1]

Presently it is realistic to cut down waste in the thermal networks by using modern efficient types of thermal insulation materials such as cellular plastics, Styrofoam and other materials with thermal conductivity of 0 03 - 0 05 Ccal/ (m x hr x°C) We assume the use of these piping insulation materials

For pipeline #1 from Table A 2 1

$Q_{in1} = 0\ 231 \times (110 - 15) \times 1 \times 1\ 04 \times 9 = 205\ 4$ *Ccal/hr*

Similar calculations were carried out for all pipelines and are shown in Table A 2 3 savings are received taking into account the length of a pipeline and full savings - considering the steam distribution system efficiency

Table A 2 3

Pipeline No	Given length	Thermal waste without insulation	Thermal waste with insulation	Savings
	L_o, m	Q_{nin}, Ccal/hr	Q_{in}, Ccal/hr	S_N, Ccal/hr
1	9	2565	205 4	2359 6
2	5	6720	293 4	6426 6
3	5	855	87 6	767 4
4	5	3120	176 5	2943 5
5	5	3648	225 8	3422 2
6	5	2160	164 8	1995 2
Total				**17945 3**

Thus annual savings should amount to

$S_a = 17{,}914\ 8$ Ccal/hr $\times$ *80* hrs $\times$ *52* weeks = *74 5* Gcal/year

Annual cost savings estimate

Cost of 1 Gcal - $C_{GC} = US\$22$

Annual savings

$S_M = S_a x S_{GC} = 74\ 5 x 22 = US\$1,640$

Implementation cost

Total cost of necessary insulation for the plant is

$C_{IN} = US\$500$

Installation costs $C_{CON} = US\$400$

Total estimated costs

$C_{EST} = C_{IN} + C_{CON} = US\$500 + US\$400 = US\$900$

Simple payback estimate

Annual savings $S_M = US\$1,640$

Implementation costs $C_{EST} = US\$900$

Simple payback $SP = C_{EST}/S_M = 900/1,640 = 0\ 55\ year$

A 3 ECO#3 RECOVERY OF CONDENSATE FROM WHOLE MILK PRODUCTS WORKSHOP

Description of ECO

The condensate generated from the steam supplied to the whole milk products workshop is drained to the sewer system The temperature of the condensate was measured to be 78 degrees C at the point where it was being discharged to the sewer drain The plant staff estimates that a total of 6,570 tons of condensate is generated by the whole milk products workshop Sensible heat can be recovered from 83 percent of this condensate as a source of hot water for domestic hot water use The remaining 17 percent is lost as flash steam

The load profile of the hot water system coincides with that of the condensate generated in the whole milk products workshop This makes for a good match between the availability and demand for the condensate The peak usage periods occur in the summer

The primary savings will come from the reduction in the consumption of steam used for heating domestic hot water There will also be some secondary savings from reduced well pump operation due to the reduced load on the well make-up water for domestic heating purposes However, there will also be additional electrical energy consumed by the new condensate pump offsetting the savings from the well pump Therefore the secondary savings will be minor and have not been considered in the energy savings estimates below

It is recommended that a condensate receiver tank be installed in the whole milk products workshop and piping be installed from the process equipment to route the condensate to this tank The condensate is then pumped over to the steam distribution room to the existing domestic hot

water tanks The condensate pump is controlled by a float level in the new condensate receiver tank The new receiver tank and associated piping will be insulated

Energy Savings Estimate

The whole milk plant receives steam from the main distribution room at a pressure of 12 atmospheres (176 psig) This pressure is reduced inside the plant to the requirements of individual processes If the condensate is drained to the new condensate receiver tank at atmospheric pressure approximately 17 percent of the condensate will flash into steam This represents a 83 percent recovery The temperature of the condensate measured during the energy audit was 78 degree C (172 degree F) The temperature of the deep well make-up water is 15 degree C (60 degree F)

$Q = (m * [h_2 - h_1])/e$

Q = annual savings in energy, Btu [Gcal],

m = annual condensate available from the whole milk products workshop, lb/year,

h_1 = enthalpy of deep well water at 60 degree F, Btu/lb,

h_2 = enthalpy of condensate at 172 degree F, Btu/lb,

e = efficiency after dynamic and heat losses in piping from the sugar plant

Using the above equation and information from the plant we can calculate the annual energy savings

m = 6,570 tons/year x 0 83 x 2,200 lb/ton = 12,000,000 lbs/year

h_1 = 28 Btu/lb (from steam tables)

h_2 = 140 Btu/lb (from steam tables)

e = 0 95 based on temperature and pressure measurements at the sugar plant and the steam distribution room, the enthalpy of the superheated steam was 5 percent lower representing transmission losses

Q = (12,000,000 lbs/year * (140 - 28) Btu/lb)/0 95 = 1,465 2 million Btu/year

Converting to Gcal (1 Gcal = 3 968 million Btu)

Q = ***369*** Gcal/year

Annual Cost Savings = 369 Gcal/year * Hr 40 /Gcal = ***Hr 14,760 [$8,100]***

Implementation Costs

The cost of the equipment is given in the table A 3 1 below The cost of the condensate receiver tank, pump and controls is based on model A2111S The exact model and sizes will need to be established more closely during the engineering design phase with the help of the equipment supplier The labor for installation is to be provided by the plant The estimated time from ordering the condensate handling equipment to clearing customs is 60 to 65 days or approximately 2 months

Table A 3 1 Cost Estimate for Implementation of ECO-3

Item	Cost, US$	Cost, Hr
1 Condensate receiver tank, pump and controls	$7,500	13,875
2 Five 1-1/2" steam traps ans strainers	$2,000	3,700
3 Five 1-1/2" gate valves threaded 300 psi	$500	925
Subtotal	**$10,000**	**18,500**
4 Shipping and customs duty on equipment Add 60%	$6,000	11 100
5 Piping Sch 40 Steel including supports and fittings		
200 feet of 4"	$3,000	5,550
200 feet of 1-1/2"	$1,000	1,850
6 Insulation Fiberglass with all service jacket		
Two inch thick for 200 feet of 4"	$1,000	1,850
One and a half inches for 200 feet of 1-1/2"	$400	740
Total	**$21,400**	**Hr 39,600**

Note Quantities for fittings, valves, etc and piping lengths will depend on the routing and final installation design Exact requirements will be determined during the implementation phase by the condensate system vendor and plant staff

Simple payback estimate

The simple payback is = $21,400/$8,100 = ***2 62*** years

A 4 ECO #4 AUTOMATIC CONTROL OF DEEP WELL PUMPS

ECO description

The sources of potable water at the enterprise are 2 deep wells in which ETzV 8-25 deep well pumps are installed each with 25 m^3/hour capacity The pumps fill a 350 m^3 storage reservoir

Reservoir filling is controlled visually with the help of a float level gauge that leads to accidental overfilling of the reservoir

We recommend to install a pump automatic control appliance depending on the level of water in the reservoir which will prevent overfilling

Annual energy savings estimate

Electric power savings will happen by exclusion of the reservoir overfilling There is no record of such cases Let us assume that the pumps overfill the reservoir especially at night when the level is invisible from the pump room window

Overall water losses are estimated at b=3%

Electric power savings per year will be

$S_E = G_W x\ b\ x\ P_P/G_P = 120\ 4 x\ 0\ 03 x\ 8/25 = 1\ 16$ thousand kWh, where G_W is overall use

of water in 1996, G_W=120,4 thousand cubic meters,

b is a loss, b=3%,

P_P is capacity of pump electric motor, kW,

G_P is capacity of the pump, cubic meters per hour

Annual cost savings estimate

Money savings from exclusion of deep well water losses at its cost of C_W = US$0 54 per 1 cubic meter taking into account depreciation of buildings and equipment, wages of operation personnel O & M costs water use and other costs will be

$S_W = G_W x\ b\ x\ C_W = 120\ 4\ x\ 0\ 03\ x\ 0\ 54 = US\$1\ 95$ thousand

Total savings will be

$S_M = S_W = US\$1,950$ per year

Implementation costs

Cost of level float - C_1 = US$1,470

Cost of materials - C_2 = US$60

Design costs - C_3 = US$200

Construction and installation costs - C_4 = US$300

Total projected costs

$C_{COM} = C_1+C_2+C_3+C_4 = 1,470+60+200+300 = US\$2,030$

Simple payback estimate

Annual savings in costs - S_M = US$1,950

Commissioning costs - C_{COM} = US$2,300

Simple payback

$SP = C_{COM}/ S_M = 2,300/1,950 = 1\ 04$ year

A 5 ECO#5 AUTOMATIC CONTROL OF COLD WATER PUMPS

ECO description

Cold water supply is from the plant deep well via a 350 m^3 storage reservoir In the pumping unit there are 3 network pumps of 4K6 type with electric motors P=11kW Pressure in the supply system p=4kg/c m^2 Based upon the load schedule one pump is usually operated, but in case of pressure drop the second pump is started on call from a workshop, its shutdown time is determined by the pump room operator independently The pump room supplies also outside consumers (residential buildings, kindergarten)

Judging from the pump operation log filled out by operation personnel and analysis of the work schedule and district water supply we can assume on average that half a day pump works at water consumption level equal to one half of nominal capacity, 3 hours - equal to full nominal capacity, 4 hours a day two pumps operate at water consumption level equal to nominal capacity,

1 hour - 2 pumps operate at water consumption level equal to one half of nominal capacity Operation at modes when water consumption does not correspond nominal capacity causes power overuse

We recommend to drive cold water pumps via frequency regulated variable speed drive of REN - 11 type manufactured by the Kharkiv association "Energosberezhenie" which automatically ensures water pressure in the network and pump capacity in compliance with water consumption

In this case variation of pump capacity will be determined by the formula

$Q_1 = Q_N x\ n_1/n_N$

where Q_N - is nominal capacity of the pump, cubic meters per minute,

n_1 is pump rpm ensuring necessary output of the Q_1 pump,

$_{Nn}$ - is nominal rpm of the pump

Power consumed by the electric drive is determined by the formula

$N_1 = N_N (n_1/n_N)^3$, kWh

where N_N - is nominal capacity of electric motor, kW,

N_1 - is consumed power at the n_1 rpm, kW

Annual energy savings estimate

Calculation results are shown in Table A 5 1

Table A 5 1

Water use as share of Q_N	Operation hours per day	Consumed power at the basic variant, kW	Consumed power with *REN*, kW	Daily savings ΔE, kWh
Q1=QN/2	10	11	1 38	96 2
Q2=2QN/2	1	22	11	11
Total				**107 2**

Annual electric power savings will be

$SA = \Delta E\ x\ 365 = 107\ 2\ x\ 365 = 39{,}128$ kWh

Annual cost savings estimate

Money savings at the price of US$ 0 044 per 1 kWh will be

$S_M = S_E x\ 0\ 044 = 39{,}128\ x\ 0{,}044 = US\$1{,}722$ kWh

Implementation costs

Cost of *REN-11-* $C_1 = US\$2{,}550$

Cost of installation and construction are insignificant and will by carried out by the plant personnel

Total estimated costs

$C_{COM} = C_1 = US\$2{,}550$

Simple payback estimate

Annual savings in costs - S_M = US$1,772

Commissioning costs - C_{COM} = US$2,550

Simple payback

$SP = C_{COM}/S_M = 2{,}550/1{,}722 = 1\ 48$ years

A 6 ECO#6 OPTIMIZATION OF HOT WATER SUPPLY PUMPS

Description of ECO

There are three pumps installed in parallel that serve the domestic hot water supply system The pumps are 7 5 kW, 11 kW and 15 kW each The 7 5 kW and 11 kW pumps are operated 24 hours a day, 365 days a year This leads to energy waste because the hot water demand drops significantly during the night time when the plant is idle but the pumps continue to run and unnecessarily overpressurize the piping

It is recommended that a timer controller be installed that will allow sequencing of the pumps to match the hot water demand and eliminate excess pumping during periods of low demand The large 15 kW pump can be programmed to run during peak periods and the smaller 7 5 kW pump can be operated the rest of the time In order for the timer to control the pump motors, a magnetic motor starter would have to be installed in the power line going to each motor The timer would be installed as part of the lower voltage control circuit which will make or break the contacts in the motor starter to start/stop the motor automatically

Energy Savings Estimate

At present a 7 5 kW and 11 kW pump are run 100 percent of the time If a loading factor of 75 percent is used the total energy consumed annually by these is calculated as follows

$Q_1 = kW * LF * H$

Q_1 = Existing electrical energy consumption, kWh/year

kW = Power consumption by the pump motor, kW

LF = Motor loading factor

H = Annual Hours of Operation of the pump, hours/year

Therefore for the existing pump operation

$Q_1 = (7\ 5 + 11)\ kW * 0\ 75 * 8760\ hours/year = 121{,}545$ kWh/year

With the new timer control, the large 15 kW pump and the small 7 5 kW pump can be programmed to run based on demand The pumps can be programmed to switch back and forth several times a day to match hot water demand Also, the small pump can be programmed to run on the weekends Since washing determines the peak load of the hot water use and this operation is carried out only at certain times during the day, it is anticipated that the larger 15 kW pump will be needed for 1/3 the time during the week days and 0 percent of the time on the weekend Similarly, the smaller 7 5 kW pump will operate the rest of the time 2/3 of the time during the weekdays and 100 percent of the time over the weekends The annual energy consumption of this arrangement can be estimated as follows

Q_2 = Energy consumed by the small pump + Energy consumed by the large pump

Using the same general equation as was used for estimating the existing energy consumption, we can calculate the energy consumption of the new arrangement

Q_2 = 7 5 kW x 0 9 x 6,672 hours/year + 15 kW x 0 75 x 2,088 hours/year

Q_2 = 68,526 kWh/year

Annual Energy Saved, S_E = ***Q1 - Q2*** = 121,545 - 68,526 = ***53,019*** kWh/year

Annual cost savings estimate

Annual Cost Savings, ***SC = 53,019*** kWh/year x ***US$0 044 =US$2,333***

Implementation Costs

One two-channel timer and two magnetic motor starters will be needed to automate the operation of the hot water pumps (see Table A 6 1 below)

Table A 6 1 Cost Estimates for ECO-6

	Items	Costs, US$	Costs, Hr
1	One 7-day programmable timer Omron Model H5S-FB	$180	333
2	One magnetic motor starter for 15 kW motor Allen Bradley Model with overload relays	$200	370
3	One magnetic motor starter for 7 5 kW motor Allen Bradley Model with overload relays	$120	222
	Subtotal	**$500**	**925**
4	Shipping and customs duty Add 60%	$300	555
	Total	**$800**	**1,480**

Simple payback estimate

Simple Payback = $800/$2,333 = ***0 34*** year (4 months)

A 7 ECO#7 REDUCTION OF COMPRESSED AIR LOSSES IN OIL AND MOISTURE SEPARATION

ECO description

At the enterprise compressed air is supplied by plant compressor unit equipped with 2 compressors of 2VM 2,5-14/9 type with 90 KW motors and 1 compressor of 302 VM-108/U4 type with 75 KW motor

The sore point of the compressor unit is impossibility to operate the compressed air dehumidifying system due to contamination of silica gel with oil The situation is aggravated by growing danger of oil explosion settling in the piping as the result of cracking-process and self-

inflammation which makes the plant intensively blow through the piping that requires up to 10% of produced compressed air

We recommend to install automatic oil and moisture separator of MV-3 type with moisture trap mlnufactured by the Black Sea shipyard In case of implementation of this proposal the compressed air use for purging, the reliability of the dehumudifying system will be ensured, electric power savings will be up to 3%

Annual energy savings estimate

At the compressor room there is no metering of energy used for generation of compressed air and compressed air output By the measurement results of 11 20 97 it was established that the plant was supplied with one compressor of 302 VP-10/8U4 type which was operational for 10 hours with total runtime RT=50%

Hence, electric power savings will be

$S_E = P_C \times T_R \times RT \times T_A \times f = 75 \times 10 \times 0\ 5 \times 365 \times 0\ 03 = 4{,}106$ kWh ,

where P_C - is capacity of compresso, kWh,

T_R - is runtime during a day, hours,

RT - is runtime, %,

T_A is operation days in a year,

f - is savings factor, f=0 03

Annual cost savings estimate

Money savings at the price of US$ 0 044 per 1kWh will be

$S_{M1} = S_E \times 0\ 044 = 4106 \times 0{,}044 = US\$180\ 7$

Besides, money costs will be reduced for silica gel purchase which is now irretrievably lost because of oil content, compressor runtime will decrease, O & M expenses will be saved which according to the data from the plant amount to $S_{M2} = US\$500$

Total savings will be

$S_M = S_{M1} + S_{M2} = 180\ 7 + 500 = US\$680\ 7$

Implementation costs

Cost of oil and moisture separator - $C_1 = US\$735$

Cost of installation and construction - $C_2 = US\$160$

Total estimated costs

$C_{COM} = C_1 + C_2 = 735 + 160 = US\$895$

Simple payback estimate

Annual savings in costs - S_M = US$680 7

Commissioning costs - C_{COM} = US$895

Simple payback

$SP = C_{COM}/S_M$ = 895/680 7 = *1 31* years

A 8 ECO#8 AUTOMATIC ENERGY USE METERING

Steam use metering at the plant is currently carried out by the flow meter installed at the sugar plant boiler room

Once a month the bills are paid at the negotiated price of US$22 per 1 Gcal

Electric power is supplied to the plant via 10 kV cable and with the help of four transformer units - TP1 (2 x 1000 kVA), TP2 (2 x 560 kVA), TP3 (2 x 400 kVA), TP4 (2 x 400 kVA) is transformed into 0 4 kV and distributed among workshops

At each transformer unit two three-phase electric meters are installed, thus there are 8 metering stations altogether Each month meter readings are taken manually and used electric power is paid for Considering the negotiated demand charge at US$3 5 per 1 kW current average price per 1 kWh is US$0 044

Detailed study of the plant has shown that calculations of steam, electric power, gas, compressed air, cold and hot water consumption by separate production units are made with the help of the standard indicators and actual production output Instrumented metering of energy carriers inside of the plant is absent

We recommend to automate commercial and technical metering using the ITEK technical instruments manufactured by the Energiya R & D institute in Kiev These instruments are metrologically certified in Ukraine and are designed for continuous and periodical measurement/registration of physical values

Introduction of the ITEK-X1X allows consumers to pay their electric power bills by the one-rate tariff differentiated according to the daytime zone which in conjunction with the measures of reduction of the maximum hour consumption provides a considerable cost effect that has been proven by more than annual operation at numerous Ukrainian facilities

ITEK-210 and ITEK-310 are intended for commercial and technical metering of electric power (differentiated by time) and build-up of automatic metering and control systems of electric power use (AMCSEPU) in combination with electric meters of three-phase induction type equipped with pulse generation devices (E440, E870, UP-1, UP-2, UP-3, SU-500) or electronic (Siemens, Landys and Gyr, Alpha-ABB, etc) with pulse output They support 64 (for ITEK-210) or 12 (for ITEK-310) metering channels, 4 tariff zones, day schedule for all metering channels is a 5 days' minimum, 2 independent data interfaces

ITEK-210 can be used in combination with or instead of the installed TsT-5000 systems by connection to the existing matrix of primary measurement converters The ITEK-210 is included in the State register of measurement devices of Ukraine

The ITEK-410 is designed for 4 metering channels and is similar to the above devices Additionally it supports tariffs differentiated by peak consumption and demand, and provides monitoring and control over consumption process Daily schedules from 4 channels are stored for not less than 1 month

Introduction of ITEK-X2X allows consumers to meter resources with high accuracy and pay the bills for actual consumption but in proportion to the area

ITEK-220 and ITEK-320 are designed for automatic commercial metering and telemetric control of supply and consumption of liquids, gases, steam and thermal energy in combination with any primary measurement converters of consumption, temperature, pressure and pressure drop with standardized output parameters at supplier's (thermal power plant, district heat, boiler houses) and consumer's sites (industrial enterprises, public utility facilities) The ITEK-X20 devices are designed in conformity with requirements of RD-50-213-80, PR34-70-010-85, State standard 6651-84 and recommendations R75 of the Ministry of health

ITEK-220 and ITEK-320 intended for the facilities of the first metering group (up to 4 facilities) with a complex configuration of supply and recovery piping (ITEK-220), and for the facilities of the first or second metering groups (one facility) (ITEK-320)

In order to implement the ECO it is being planned to set up automatic metering of electric power use at 8 stations and commercial steam metering at one point After completion of the new boiler room equipped with gas metering system the steam meter will be transferred to the boiler room output

Technological metering of steam will be implemented at 6 points, of hot water - at 3 points, of cold water from deep wells - at 2 points

Annual energy savings estimate

Judging from the experience expected savings from introduction of own automatic metering at the plant and energy use planning and control system will be not less than 3%

Hence, based on the 1996 data annual savings of thermal energy will be 980 Gcal, of electric power - 160 thousand kWh

Annual costs saving estimate

Currently the plant pays for the energy US$1 mln Thus the energy savings in money terms will amount to

$S_E = 1{,}000{,}000 \times 0\ 03 = US\$30{,}000$

Implementation costs

The results of equipment and labor cost estimates are given in the Table A 8 1

Cost of equipment and construction in US$

Commercial metering of steam and electricity = ***US$16,200***

Technical metering of steam,hot and cold water = ***US$36,800***

Labor = ***US$8,000***

Total estimated costs

Cest = US$61,000

Simple payback estimate

Annual savings in costs - S_M = US$30,000

Commissioning costs - C_{COM} = US$61,000

Simple payback

$SP = C_{COM}/S_M = 61{,}000/30{,}000 = 2\ 1$ years

ELECTRICITY

Equipment **Table A 8 1**

#	Item	Price, US$	Qty	Total, US$
E 1	**Metering terminal** ITEK-210 metering device with built-in phone modem (1200b), UPS and sequential interface	3,925	1	3925 7
E 2	Cabinet with switching equipment	376	1	376
E 3	Control cable KVVGe (2 x 1 5), meters	2 7	960	2592
E 4	Electric meters manufactured by JSC "Rostok"	107 5	8	860
E 5	S16 electric meters	699	4	2796
E 6	**Metering operator's workplace** Decoupling module for sequential interface	193 6	1	193 6
E 7	Basic software with password	349 5	1	349 5
E 8	**Utility billing operator's workplace** Remote phone modem (1200 baud, dedicated/switched channel)	193 6	1	193 6
E 9	Basic software with password	349 5	1	349 5
Total (equipment)				**11,636**

Work

#	Item	Price, US$	Qty	Total, US$
W 1	Installation of Rostok meters	53 8	84	430 4
W 2	Installation of ABB Metronika Alpha A1R meters	215 1	1	860 4
W 3	Sensor matrix assembly (connection of meters to controller)	1075 3	1	1075 3
W 4	Commissioning of hardware and software	2354 6	1	2354 6
W 5	Preparation of design documents	1129	1	1129
W 6	Metrological certification of the installed metering system	1612 9	1	1612 9
W 7	Preparation for commercial metering	537 6	1	537 6
Total (work)				**8000 2**

STEAM

Equipment **Continuation of Table A 8 1**

#	Item	Price, US$	Qty	Total, US$
E 1	**Commercial steam metering at 1 point (400 ^{0}C, 30 atm, D=219 mm)** Orifice plate with piping section	806 5	1	806 5
E 2	Leveling condenser vessels	0	2	0
E 3	Settling vessels		2	
E 4	Needle-type valve	16 1	9	144 9
E 5	Pulse tube	80 7	1	80 7
E 6	Steam pressure sensor (Sapfir 22DA)	268 8	1	268 8
E 7	Pressure difference converter of Sapfir 22DI-2M type	430 1	1	430 1
E 8	Steam temperature sensor	26 9	1	26 9
E 9	Cold water temperature sensor	26 9	1	26 9
E 10	Control cable KVVGe (7 x 1 5), meters	2 7	100	270
E 11	ITEK-320 computer	1881 7	1	1881 7
E 12	ITEK-320 power back-up	268 8	1	268 8
E 13	Cabinet with switching equipment	376 3	1	376 3
Total (equipment)				4581 6

#	Item	Price, US$	Qty	Total, US$
E 1	**Commercial steam metering at 6 points (400 ^{0}C, 5-12 atm, D=76-102 mm)** Orifice plate with piping section	806 5	1	806 5
E 2	Leveling condenser vessels	0	12	0
E 3	Settling vessels		12	
E 4	Needle-type valve	16 1	54	869 4
E 5	Pulse tube	80 7	6	484 2
E 6	Steam pressure sensor (Sapfir 22DA)	268 8	6	1612 8
E 7	Pressure difference converter of Sapfir 22DI-2M type	430 1	6	2580 6
E 8	Steam temperature sensor	26 9	6	161 4
E 9	Cold water temperature sensor	26 9	2	53 8
E 10	Control cable KVVGe (7 x 1 5), meters	2 7	1200	3240
E 11	ITEK-220 computer	3494 6	2	6989 2
E 12	ITEK-220 power back-up	430 1	2	860 2
E 13	Cabinet with switching equipment	376 3	2	752 6
Total (equipment)				**18,410 7**

Equipment **Continuation of Table A 8 1**

#	Item	Price, US$	Qty	Total, US$
	Technical hot water metering at 3 points (D=50-78 mm)			
E 1	Orifice plate with piping section	806 5	3	2419 5
E 2	*Filters	80 7	3	242 1
E 3	*Needle-type valve	16 1	21	338 1
E 4	*Pulse tube unit	80 7	3	242 1
E 5	*Pressure difference converter of Sapfir 22DI-2M type	430 1	3	1290 3
E 6	Hot water temperature sensor	26 9	3	80 7
E 7	Cold water temperature sensor	26 9	1	26 9
E 8	Control cable KVVGe (7 x 1 5), meters	2 7	900	2430
E 9	ITEK-220 computer	3494 6	1	3494 6
E 10	ITEK-220 power back-up	430 1	1	430 1
E 11	Cabinet with switching equipment	376 3	1	376 3
	Total (equipment)			**11,370 7**
	Technical cold water metering at 2 points (D=50-78 mm)			
E 1	Orifice plate with piping section	806 5	2	806 5
E 2	*Filters	80 7	2	161 4
E 3	*Needle-type valve	16 1	14	225 4
E 4	*Pulse tube unit	80 7	2	161 4
E 5	*Pressure difference converter of Sapfir 22DI-2M type	430 1	2	860 2
E 6	Cold water temperature sensor	26 9	2	26 9
E 7	Control cable KVVGe (7 x 1 5), meters	2 7	800	2160
E 8	ITEK-320 computer	1881 7	1	1881 7
E 9	ITEK-320 power back-up	268 8	1	268 8
E 10	Cabinet with switching equipment	376 3	1	376 3
	Total (equipment)			**7735 1**

* Instead of flow metering by pressure drop (marked with asterisk) ultrasonic flow meters or turbine-type meters can be used

ECO #9 AUTOMATIC TEMPERATURE CONTROL IN COLD ROOMS

One of the major users of electric power at the plant is refrigeration which takes up around 76% of total energy use The dynamics of value change is shown in the Table A 9 3

Table A 9 3 Dynamics of electric power use for cooling generation

Year	Cooling generation, Gcal	Specific use, kWh/Gcal	Electric power use, thousand kWh	Industrial electric power use, thousand kWh	Share of industrial use, %
1995	4203	757	3181	5516	57 6
1996	5749	757	4352	5686	76 5
1997, 9 months	4980	757	3770	4955	76 1

Primary cooling users are cooling units at WMP workshop - 53 units with total capacity Q = 456 Mcal per hour, condensed milk canning workshop - 13 units with total capacity Q = 882 Mcal per hour, powdered milk workshop - 11 units with total capacity Q = 610 Mcal per hour

The operation modes of the equipment vary part of the equipment is operated round the clock, part of it - only during worktime Cooling equipment is not equipped with product cooling temperature control systems The control is centralized at the compressor house using the temperature of the returned ice (chilled) water The basic control direction is maintenance of the maximum chilling temperature that leads to overuse of cooling and electric power to generate it

We recommend to install within the primary cooling generation system and large end-use facilities (cold storage rooms) cooling temperature controls First and foremost these are the following tanks with coolers of Ya10SV-10 type at the butter unit, milk preparation unit, cottage cheese unit, condensed milk workshop - 28 units, butter rooms and storage rooms - 4 units, delivery facility - 5 rooms, powdered milk workshop storage room, air and hydrogenated fat coolers at the powdered milk workshop

All in all it is recommended to install 46 temperature controls of TAM type with electromagnetic valves

Implementation of this ECO will result in reduction of cooling use and correspondingly of electric power by 5% or 284 3 thousand kWh

Annual energy savings estimate

Judging from the test data estimated savings from introduction of temperature controls will allow to cut down cooling consumption by 5%, electric power savings will be

$$S_E = Q_2 \, x \, 0\ 05 \, x \, b = 5749 \, x \, 0\ 05 \, x \, 757 = US\$284{,}300 \text{ kWh}$$

where Q_2 - cooling generation in 1996, Gcal,

b - specific use of electric power for generation of 1 Gcal of cooling, kWh/Gcal

Annual cost savings estimate

The energy savings in money terms at the electric power cost of US$0 044 per 1 kWh will be

$$S_M = S_E \, x \, 0{,}044 = 284{,}300 \, x \, 0\ 044 = US\$12{,}500 \text{ per year}$$

Implementation costs

Cost of temperature controls and electromagnetic valves

$$C_1 = US\$220 \text{ x } 46 = US\$10{,}120$$

Design costs - C_2 = US$1,000

Total estimated costs

$$C_{COM} = C_1 + C_2 = 10120 + 1000 = US\$11,200$$

Simple payback estimate

Annual savings in costs - S_M = US$12,500

Implementation costs - C_{COM} = US$11,120

Simple payback

$$SP = C_{COM}/S_M = 11,120/12,500 = 0\ 9 \text{ year}$$

A 10 ECO#10 DECENTRALIZATION OF THERMAL ENERGY SUPPLY - INSTALLATION OF NEW BOILERS

ECO description

The Kupyansk milk canning plant is supplied with thermal power as superheated steam from the Kupyansk sugar plant with the following parameters pressure - 30 kg/cm^2, temperature - 400° C which is reduced to 12 and 5 kg/cm^2 The length of steam pipeline from sugar plant to the steam distribution unit of the milk plant is 620 m, diameter is 219 mm

Steam parameter measurements of 11 19 1997 showed the following

- daily steam flow $G=98$ tonnes,
- steam temperature

1) at the sugar plant boiler room output - $t_1 = 420$ ^{0}C,
2) at the steam distribution unit input - $t_2 = 340$ ^{0}C,
3) median ambient temperature -3 ^{0}C,

- steam pressure at the steam distribution unit input - $P_1 = 29$ kg/cm^2

Losses in the supply line at the day of measurement were

$$\Delta Q_1 = G(i_1 - i_2) x\ 10^{-6} = 98,000(782\ 9 - 737\ 6)\ x\ 10^{-6} = 4\ 45 \text{ Gcal/day } (5\ 8\%),$$

where i_1, i_2 is steam enthalpy respectively at the boiler room and steam distribution unit, i_1=782 9 Gcal/kg, i_2 =737 5 Gcal/kg

It is established that at the annual use of thermal energy in accordance with statistical data in conformity with the form No11 MTP "Report on the results of the use of fuel, thermal and electric energy" in 1996 of 42,392 Gcal losses can be evaluated as Q_1=2458 7 Gcal/year It should be noted that these losses will grow with the aging of the insulation and network

For the production purposes in compliance with the design data saturated steam should be used according to Table A 10 1

Table A 10 1

Name of w/shop	Steam pressure, kg/cm^2	Amount of steam, tonnes/hour
1 Milk canning	12	12
2 Powdered milk	12	10
3 Whole milk product	6	5
Total		**27**

The necessary 12 kg/cm^2 pressure parameter is achieved by reduction of 30 kg/cm^2 pressure which caused thermal energy losses at the measurement day of 11 19 1997 to the amount of

$$\Delta Q_1 = G(i_2 - i_3) \times 10^{-6} = 98{,}000(782\ 9 - 664\ 7) \times 10^{-6} = 7\ 13 \text{ Gcal/day } (9\ 87\%),$$

where i_3 - is enthalpy of saturated steam at the design parameters

pressure $P_2 = 12 kg/cm^2$, temperature $t_3 = 181^0 C$, i_3 =664 7 Gcal/kg

Or if recalculated per annual consumption in 1996

$$\Delta Q_3 = 42{,}392 \times 0\ 0987 = 4184\ 1 \text{ Gcal/year}$$

The supplied steam is superheated which causes disruptions in milk processing technology and the plant is considering the possibility of moisturizing the steam by injection of condensate into steam piping

One of the main requirements of milk processing technology is reliability of steam supply

Steam pressure drop below the nominal value or complete cut-off causes automatic stop of production and start of equipment washing procedure According to the enterprise data in the course of each year there are occurrences of steam supply cut-offs without prior warning from the sugar plant boiler room which amounted to 156 hours in 1997 In 1996 the milk plant losses amounted to approximately 145 Gcal of thermal energy

The plant after steam use is getting around 48 700 tonnes of condensate which is not returned to the boiler room

Losses of thermal energy due to failure to recover condensate are

$$\Delta Q = G_C(i_1 + x_S r_1) \times 10^3 = 48{,}683(171\ 3 + 0\ 056 \times 499\ 5) \times 10^3 = 9{,}701 \text{ Gcal/year},$$

where G_C - is amount of dumped condensate, tonnes per year,

$$G_C = Q_U \times q / i_2 = 35{,}904 \times 10^6 \times 0\ 001/737\ 5 = 48{,}683 \text{ tonnes/year},$$

Q_U - thermal energy use for production purposes in 1996, Gcal,

q - specific water content in steam, $q = 0\ 001$ tonnes/kg at $P = 8$ kg/cm^2,

i_1 - thermal energy content of condensate at pressure $P_3 = 8$ kg/cm^2, Ccal/kg

i_1 = 171 3 Ccal/kg,

x_S = share of unused steam, kg/kg

$$x_S = S\sqrt{P_3} = 0\ 02\sqrt{8} = 0\ 056,$$

r_1 - vaporization heat at $P_3 = 8$ kg/cm^2, Ccal/kg

r_1 - = 499 5 Ccal/kg

Instead of the existing system of thermal energy supply from the sugar plant boiler room we suggest to build own boiler unit at the plant consisting of 3 steam boilers of modular design with capacity of 10 tonnes of steam per hour and 1 water boiler of 2 5 GCal/hour capacity for hot water supply Efficiency of the proposed equipment is $\mu = 91\%$

Annual energy savings estimate

Thermal energy savings in case of transfer to decentralized thermal supply will be based upon the following

1 Elimination of losses in the steam pipeline from the boiler room to the steam distribution unit, $Q_1 = 2{,}458\ 7$ Gcal/year

2 Elimination of losses during steam pressure reduction from 32 kg/cm2 to 12 kg/ , $Q_2 = 4{,}184$ Gcal/year

3 Assurance of 100% recovery of condensate from used steam, $Q_3 = 9{,}701$ Gcal/year

4 Prevention of losses from interruptions in steam supply causing product rejection, Q_4 ~*145* Gcal/year

Total annual savings

$$Q_{\Sigma} = Q_1 + Q_2 + Q_3 + Q_4 = 2458\ 7 = 4184 = 9701 = 145 = 16{,}488\ 7 \text{ Gcal}$$

Annual cost savings estimate

Money savings at the price of thermal energy of US$21 62 per 1 Gcal will be

$$S_M = Q_{\Sigma} \times 21\ 62 = 16488\ 7 \times 21\ 62 = US\$\ 357{,}000$$

Implementation costs

Cost of boilers - C_1 = US$440,000

Cost of materials - C_2 = US$68,000

Design costs - C_3 = US$72,000

Construction and installation costs - C_4 = US$450,000

Total estimated costs

$$C_{COM} = C1+C2+C3+C4 = 440{,}000+68{,}000+72{,}000+450{,}000 = US\$1{,}050{,}000$$

Simple payback estimate

Annual savings in costs - S_M = US$357,000

Commissioning costs - C_{COM} = US$1,050 000

Simple payback

$$SP = C_{COM}/S_M = 1{,}050{,}000/357000 = 2\ 9 \text{ years}$$

B. PRELIMINARY SPEFICATIONS

Specifications of recommended equipment for Kupyansk milk canning plant

Table B 1

ECO # by Section 7	Name of equipment	Type, model	Manufacturer, country	Basic parameters	Requirement		Price		Total cost		Notes
					Measure unit	Qty	Hr	$ US	Hr	$ US	
1	2	3	4	5	6	7	8	9	10	11	12
ECO #1	Non-contact infrared thermometer	Model PM3L3SZ	"Raytek", USA	t = -20 +1000 °C $L_{measure}$=10m	units	1	-	1600	-	1600	
	Partial radiation thermometer	Smotrich-M6P	Research and industrial association "Termopribor" 3 Naukova str Lviv 290053 UKRAINE	t = -35 +1000 °C $L_{measure}$=10m	units		2500	1350	2500	1350	
	Non-contact infrared thermometer	Model DHS-26XL	WAHL INSTRUMENTS, INC 5750 Hannum Avenue Culver City CA 90231 USA	t=-20 +1000 °C $L_{measure}$=10m			-	2640	-	3430	
ECO #2	Thermal insulating curtains/doors	Two-wing	ALEKO 90-day warranty	2 44 x 2 44 m	units	2		1700		3400	
ECO #2	Thermal insulation	Fiberglass with aluminum jacket	USA	t = 150 °C d = 50 mm d = 76 mm d = 89 mm d = 102 mm d = 219 mm	m	55595	27 34 27 34 27 34 27 34 27 34 1	14 7 14 7 14 7 14 7 14 7	136 7 136 7 136 7 246 1 136 7	73 5 73 5 73 5 132 3 73 5	
		Mats of mineral wool on fiberglass	JSC "Stroyindustriya" 7 Stroyindustriya str Kyiv 252010 UKRAINE		m^2	18	3 54	1 9	84	45	
		ROMB basalt material rolls	JSC' Biletsky zavod " Teplozvukoizolyatsiya" 7 Stroiteley str Kotsubinske Kyiv oblast UKRAINE	70-100 mm thickness	m^2	18	22 2	11 9	400	280	

ECO #3	Condensate recovery unit	Spirax Girdlestone Series III Model D2111S	Spirax Sarco, Inc P O Box 119 Allentown, PA USA	Receiver - D, Pump - 1FYC21	units	1		7500		13880	
	Steam trap	FT 43-10TV	Spirax Sarco, Inc P O Box 119 Allentown, PA USA	DN=25 P_s=16 kg/cm^2	units	5		455		2600	
	Steam trap with strainer	Model 811	Armstrong USA	DN=20, orifice diameter=2 78 mm	units	5		220		1265	
	Float- and hydrodynamic-type steam trap	KPGD-1	Institute of technical thermal physics of NANU 29 Zhelyabova str Kyiv 252057 UKRAINE	P_{max}= 10 kg/cm^2, d_s=40 mm	units	5					
	Condensate cast iron strainer	FIG33	Spirax Sarco, Inc P O Box 119 Allentown, PA USA	DN=25 P_s=16 kg/cm^2	units	5		110		630	
	Check valve	DCV2	Spirax Sarco, Inc P O Box 119 Allentown, PA USA	DN=25 P_s=16 kg/cm^2	units	5		90		520	
ECO #4	Level control			for water t=0-30^{0}C,							
	a) level sensor	LP 10-3	Spirax Sarco, Inc P O Box 119 Allentown, PA 18105 USA	L=1500 mm	units	1	–	503	–	503	
	b) controller	LC 1000			units	1	–	627	–	627	
	Level indicator	Variant-U			units	1					
	Level control	ERSU-2K	"Progress" works Nezhin UKRAINE								
ECO #5	Frequency regulated pump motor variable speed drive	REN - 11	Energosberezhenie International association, P O Box 4515 Kharkov 310022 UKRAINE	P=11kW, U=380 V 3-phase	units	1		2550	–	2550	

25

	Transistor-controlled variable speed drive for asynchronous pump motors	ACF601- 0016-3	ABB Ukraine, Elmash research and production firm 28 Druzhby narodov blvd Kyiv 252103 UKRAINE	P=15kW, U=380 V 3-phase	units	1		2458		2458	
	Asynchronous motor frequency regulated variable speed drive	AT 01	Triol corp , 2 Blagodatnaya str Saint-Petersburg, RUSSIA	P=15кW, U=380V, 3-phase	units	1		2330		2330	
ECO #6	Programmable timer	Model H5S-FB	Omron		units	1	333	180	186	100	
	Programmable time relay	MIL-2002	JSC "STS" 44 Dostoevsky str , Saint-Petersburg 191126 RUSSIA	Control channels - 1, commands - 96							
	Magnetic starter for 15-kW motor		Allen Bradley - representative office suite 54, 59 K Marx blvd, Dnepropetrovsk 326000 UKRAINE	P=15 kW, U=380 V, 3-phase	units	1	370	200	186	100	
		PME-3110	Kemerovo electromechanical factory Kemerovo RUSSIA	P=15 kW, U=380 V, 3-phase							
		PMA-3000	"Elektroapparatura" works Gomel BELARUS	P=15 kW, U=380 V, 3-phase							
		PML-3100	"TEKHSNAB" suite 606, 9 Leskova str , Kyiv UKRAINE	P=15 kW, U=380 V, 3-phase							
	Magnetic starter for 7 5-kW motor		Allen Bradley - representative office suite 54, 59 K Marx blvd, Dnepropetrovsk 326000 UKRAINE		units	1	222	120	186	100	

		PME-2100	Kemerovo electromechanical factory 11 50 let Oktyabrya str, Kemerovo 650610 RUSSIA	P=7 5 kW, U=380 V, 3-phase	units	1					
		PML-2100	"Elektroapparatura" works, 157 Sovetskaya str, Gomel 246648 BELARUS	P=7 5 kW, U=380 V, 3-phase	units	1					
		PME-2100	"TEKHSNAB" suite 606, 9 Leskova str , Kyiv UKRAINE	P=7 5 kW, U=380 V, 3-phase			32 4		32 4		
ECO #7	Oil and moisture separator	MB - 3	Black Sea shipyard, Nikolaev, Ukraine	$d_s = 10^0$ mm $P_s = 10$ kg/cm²	units	1	1367	735	1367	735	
	Oil extraction press	MOI-1	Mogilev-Podolsky instrument works 13 Melnika str, Mogilev-Podolsky UKRAINE	$P_s = 8$ kg/cm²			2400	1290	2400	1290	
ECO #8	Energy metering and control equipment	ITEK (US-made components)	Energiya R & D Institute bldg 44, 37 Peremogy blvd , Kiev 252056 UKRAINE	Commercial metering Technical metering		11	- -	2e+09	– -	1 620e+09	
	Automatic electricity metering system	ASOE (Russian-made components)	"Enerrgosberezhenie" 3/26 Ternopilska str, Lviv 290034 UKRAINE	Commercial metering Technical metering		11		3e+09		2 500e+09	
ECO #9	Temperature control with electromagnetic valve	TAM - 113	JSC "ORLEX" 6 Lomonosova str, orel 302000 RUSSIA	t = - 20 + 10 °C		46					
	Electric temperature control device	TRE6513-07	Production association "Elektropribor" 17 Glybochitska str, Kyiv UKRAINE	t = - 50 + 50 °C							
	Temperature control device	RT-0193	Research and production association "Termopribor" 3 Naukova str, Lviv UKRAINE	t = - 50 + 150 °C							

ECO #10	Modular boiler unit, water heating	BKU-2,0	"Ukrkotloservis ', Donetsk, Ukraine	Heating capacity-20 mW, t=95^{0}C, pressure = 8kg/cm^2		1	35400	19000	35400	19000	
	Transportable boiler unit (modular boiler)	KMV-2,0-GM	JSC ' Ukrmontazhgas" Boyarka UKRAINE	Heating capacity-20 mW, t=95^{0}C, pressure = 8kg/cm^2							
ECO #10	Modular boiler unit, steam		USA, RUSSIA, GERMANY, ITALY	Steam production capacity-10 tonnes/hour, pressure=14 kg/cm^2	1 unit	3 units					

C. INFORMATION FROM EQUIPMENT MANUFACTURERS

BEST AVAILABLE COPY

WAHL INSTRUMENTS INC
5750 HANNUM AVENUE
CULVER CITY CALIFORNIA 90231
TOLL FREE (800) 421 2853
TELEPHONE (310) 641 6931
TELEX 66 4406 (WAHL CORP LSA)
FAX (310) 670 2810

Heat Spy Digital Infrared Thermometer

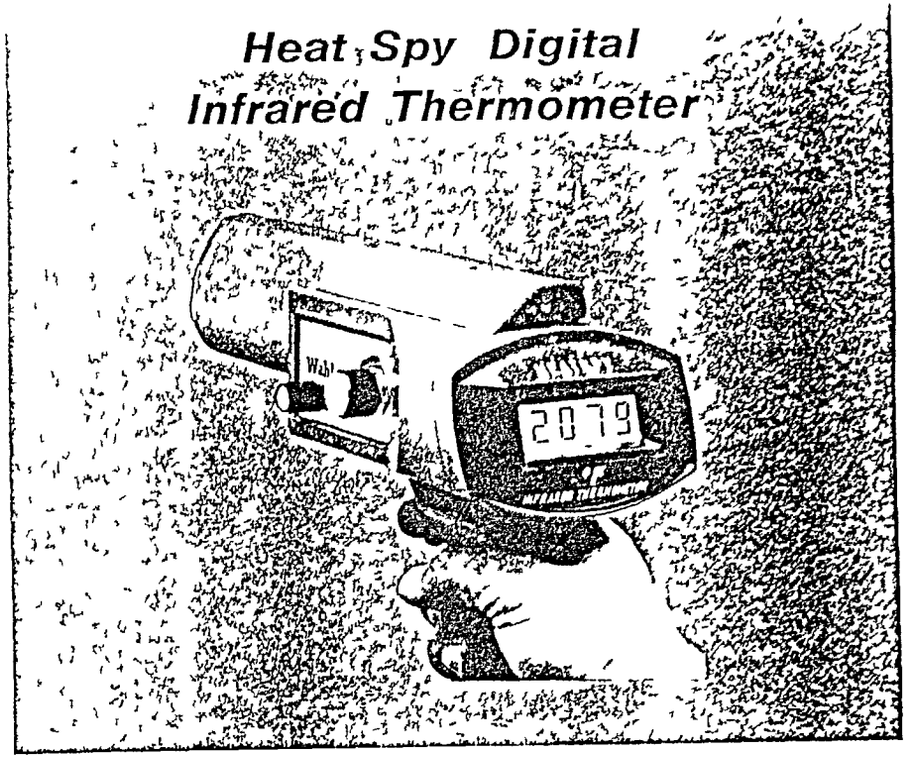

INSTRUCTION
MANUAL

MODELS DHS 8X DHS 24, DHS 24X
DHS 26 DHS 26X, DHS 28X

Wahl

8 0 SPECIFICATIONS

Table 3

HEAT SPY SPECIFICATIONS

Model	DHS 24X (LCD) DHS 24 (LED)	DHS 26X (LCD) DHS 26 (LED)	DHS 28X (LCD)	DHS 8X (LCD) DHS 8 (LED)	DHS400X
Application	General Use including Glass Surfaces Best Accuracy	General Use including Glass Surfaces	High Temp including Glass Surfaces	Small Targets Electronic Components	0 1 Resolution Earth Science Laboratory Use
Temperature Range	0 to 1000 F −20 to +550 C	0 to 2000 F −20 to +1000 C	32 to 2500 F 0 to 1400 C	0 to 1000 F −20 to +550 C	40 0 to +600 C −40 0 to +140 0 F
Digital Readout LCD 0 5 in (12mm) LED 0 33 in (8 2mm)	LCD LED	LCD LED	LCD	LCD LED	LCD
Factory Mutual approved for hazardous environments	Yes	Yes	Yes	Yes	Yes
External F/ C Switch	Optional	Optional	Optional	Optional	N/A
Spectral Range (Microns) = Meters X10⁻⁶	8 14	8 14	8 14	8 14	8 11
Accuracy at 77 F ±5	±0 3% Full Scale	±0 3 % Full Scale	0 3 % Full Scale	±0 3 % Full Scale	0 5 C
Ambient Operation Temperature	25 to 125 F −4 to +52 C	25 to 125 F −4 to +52 F	5 to 125 F 1 to +52 C	25 to 125 F 1 to +52 C	10 to 101 F 5 to 10 C
Temp Coefficient	±0 1 deg/deg	±0 1 deg/deg	±0 1 deg/deg	±0 1 deg/deg	±0 1 deg/deg
Repeatability	±1 F	2 F	1 F	2 F	0 2 C
Resolution	1 F/C	1 F/C	1 F/C	1 F/C	Switchable 0 1 or 1 F/C
Response Time to 95% of Reading	1 sec	1 sec	1 sec	1 sec	1 sec
Target Size at Focal Point	1 6 in dia @ 2 ft	1 6 in dia @ 2 ft	1 6 in dia @ 2 ft	0 15 in dia @ 1 in	in dia @ 2 ft
Distance to Target Size Beyond Focal Point	20 1	20 1	20 1	N/A	20 1
Practical Working Distance	0 to 40 ft	0 to 40 ft	0 to 10 ft	0 to 8 in	0 to 10 ft
Sighting System	Enclosed Optical Sight	Enclosed Optical Sight	Enclosed Optical Sight	Light Beam on Center Line	Enclosed Optical Sight
Adjustable Emissivity Range	0 2 1 0	0 2 1 0	0 2 1 0	0 2 1 0	0 2 1 0
Internal Calibration	Auto zero	Auto zero	Auto zero	Auto zero	Auto zero
Internal Self Test	Yes	Yes	Yes	Yes	Yes
Maxi Temp Peak Hold	Yes	Yes	Yes	Yes	Yes
Output to Recorder	Option J	Option J	Option J	Option J	No
Battery	One 9V (LCD) Two 5 4V (LED)	One 9V (LCD) Two 5 4V (LED)	One 9V (LCD)	One 9V Two 5 4V (LED)	One 9V
Continuous Operating Time	40 hrs (LCD) 15 hrs (LED)	40 hrs (LCD) 15 hrs (LED)	40 hrs	40 hrs 15 hrs LED	10 hrs
External Power See Options	With option EP P/N BP6 Rechargeable Battery Pack provides 200 hrs on LCD models or 40 hrs for LED models on one charge Continuous line operation through recharger				
Weight Lbs	2 2	2 2	2 2	2 5	2 5

Table 3 (Continued)

OPTIONS

Output Jack for 1 mv/deg linear output Includes connection for external battery pack BP12 below
Specify Option 'J'

Modification to use External Battery BP12 below
Specify Option "EP'

External Battery Pack with recharger for 110V
Specify BP12 110

External Battery Pack with recharger for 220V
Specify BP 12 220

Optional F to C Computer Calculated switch selection on handle
Specify Option 'S'

Wahl Heat Spy Thermometers are specified and tested in accordance with ASTM specifications

9 0 FACTORY REPAIR PROCEDURE

Pack the instrument in the original shipping container to prevent additional damage We specify this requirement because the package is designed to protect against damage

Ship Parcel Post/Prepaid to

Wahl Instruments Inc
5750 Hannum Avenue
Culver City CA 90231

Your instrument will receive immediate attention

BEST AVAILABLE COPY

42 1162

15 25 7363 025 88

ПІРОМЕТР ЧАСТКОВОГО ВИПРОМІНЮВАННЯ «СМОТРИЧ-М6П»

Призначений для безконтактного вимірювання температури об'єктів при відпрацьовуванні різноманітних технологічних процесів та експрес-контролю температури обладнання.
Застосовуються практично у всіх галузях промисловості, а також в сільському господарстві та наукових дослідженнях.
Показ температури на табло в цифровому вигляді.
Пірометр мікропроцесорний.

Діапазон вимірювальних температур, °С	від мінус 35 до 1100
Основна похибка, °С	±(0,01tвим +1)
Робочий спектральний діапазон, мкм	від 8 до 14
Показник візування	1 : 30
Час установлення показів, с	2,0
Номінальна робоча відстань, м	1,0
Живлення, В	вбудована батарея з напругою 6,25
Споживана потужність, Вт	1,0
Маса, кг	1,5
Габаритні розміри, мм	

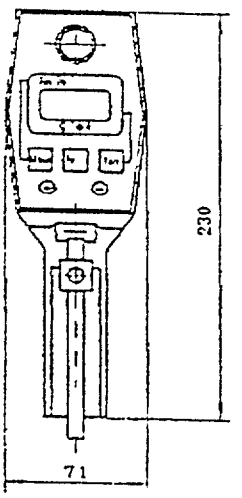

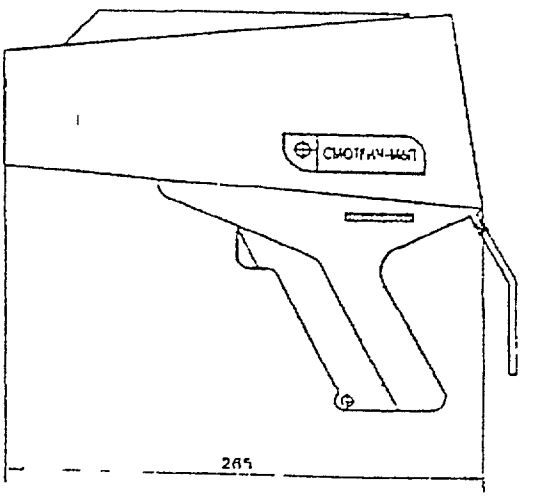

Технічні вимоги

1 Пірометр грунтується на конструктивній, схемотехнічній та метрологічній базі агрегатного комплекту стаціонарних пірометрів АПІР С (1 черга)

1 1 Комплектність (ПВ-6 + ПЧД-131 або ПЧД-121) уточнюється при замовленні

2 Спеціальні технічні вимоги на пірометр

2 1 Градуювальна характеристика спеціальна індивідуальна або стандартна з шириною діапазону (250 - 1000) С	
2 2 Спектральні діапазони, мкм	0 8 - 1,2, 1,2 - 1,8
2 3 Загальні діапазони вимірюваних температур відповідно до спектральних діапазонів, С	800 - 2500, 250 - 1300
2 4 Показник візування, в залежності від типорозміру ППП, нижньої границі вимірювання та спектрального діапазону	1/10 - 1/300
2 5 Робоча відстань фіксована, уточнюється при замовленні, м	0,2 - 20
2 6 Основна похибка комплекту ПВ-6 + ПЧД-131 або ПВ-6 + ПЧД-121, %	0,6 - 1,0

З питань придбання пірометрів звертатись.

290053 м Львів, вул Наукова, 3
НВО «Термоприлад», тел 39-07-54
63-02-77 п Вічинюк М Г

64

IEC MOTOR STARTERS, MAGNETIC, OPEN

MOTOR STARTER = CONTACTOR + OVERLOAD RELAY

E45559

LR43304

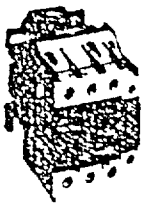

Telemecanique

CONTACTORS

- Designed for industrial motor control applications
- Rugged design ensures high mechanical and electrical life
- Overload relay mounts directly to underside of contactor

OVERLOAD RELAYS

- Bimetallic ambient compensated
- Lockable and sealable Manual Automatic reset
- Adjustable current range
- Separate Stop and Reset controls and trip indicat

3 POLE NON REVERSING CONTACTOR SPECIFICATIONS AND ORDERING DATA

Frame Type	Amp Rating Inductive	Amp Rating Contact 40	Horsepower Ratings Single Phase 115V	230V	Three Phase 200V	230V	460V	575V	Coil Voltage 50/60 Hz	Use Overload Relay Order Below	Dimensions H	W	D	Telemecanique Model LC1D	List	Each	Shpg Wt
	1	20	1	0.5	1	–	–	5	7.5	LR	3.15		3.1	09 03	48392	$66 75	0.3
														09 10 06	48391	66 75	0.8
														09 10 L6	1H429	66 75	0.7
														09 10 L7	1H455	66 75	0
	1	25	1	1	–	3		7.5	10	LM	3.15	1.77	3.1	12 10 B7	48890	109 00	84 60	0.7
														12 10 G6	48389	103 00	84 60	0.8
														12 10 L6	48315	103 00	84 60	0.7
														12 10 L7	48328	109 00	84 60	0.7
	18		1	1		5	5	7.5	5	LM	3.5	1.77	3	18 10 B7	48888	124 00	96 25	0.7
														18 10 G3	48887	124 00	96 25	0.3
														18 10 L6	48886	00	96 25	0.8
														18 10 L7	48362	00	96 25	0.8
	25	35		–		5	5			L			20	25 10	48885	160 00	107 10	
														25 30	48884	160 00	107 10	
														25 1	68402	160 00	107 10	
														25 13	58313	160 00	107 10	
Open	32	40							5				5	–	48883	270 00	121 85	
														–	48882	270 00	121 85	
														32 10	58312	270 00	121 85	
														32 13	58312	270 00	121 85	
	40	60	1	3	5	10	10	20	20	QR	4.44	3.74	3.00	40 10	48881	100 00	155 25	3
														40 10 G6	48880	100 00	155 25	3
														40 11 L6	58313	200 00	155 25	2.5
														40 11 L7	583 4	200 00	155 25	2.5
	50	70	1	3	5	7.5	7.5	10	40	QS	4.44	3.74	3.00	50 10	48879	214 00	166 25	3.1
														50 10 G6	48878	214 00	166 25	3.1
														50 11 L6	58315	214 00	166 25	2.5
														50 11 L7	58316	214 00	166 25	2.5
	65	90		5	7.5					QT			3.00	65 11 B7	48877	295 00	229 00	29
														65 11 G3	48876	295 00	229 00	31
														–	58540	295 00	229 00	2.5
														65 11 L7	58601	295 00	229 00	2.5
	80	110	1	7.5	15	25	30	60	60	QV	4.44	3.74	3.00	80 11 B7	58602	333 00	258 50	33
														80 11 G6	48875	333 00	258 50	32
														80 11 L6	58603	333 00	258 50	33
														80 11 L7	58604	333 00	258 50	33

Coil Voltage: 24 @ 50/60; 120 @ 60 Hz; 208 @ 60 Hz; 240 @ 50/60; 480 @ 60 Hz

OVERLOAD RELAY ORDERING DATA

Key	Adjustable Range in Full Load Amps	Dimensions H	W	D	Telemecanique Model LR2D	Stock No	List	Each	Shpg Wt
A	0.10-0.16				1301	48867	55 00	$42 70	0.4
B	0.16-0.25				1302	48866	55 00	42 70	0.4
C	0.25-0.40				1303	48865	55 00	42 70	0
D	0.40-0.63				1304	48864	55 00	42 70	0
E	0.63-1.0				1305	48863	55 00	42 70	0
F	1.0-1.6				1306	48862	55 00	42 70	0
G	1.25-2.0				13 06	58794	55 00	42 70	0.3
H	1.6-2.5	3.62	1.77	1.25	1307	48861	55 00	42 70	0.4
I	2.5-4.0				1308	48860	55 00	42 70	0.4
J	4.0-6.0				1310	48859	55 00	42 70	0.4
K	5.5-8.0				1312	48858	57 00	44 25	0.4
L	7.0-10.0				1314	48857	57 00	44 25	0
M	9.0-13.0				1316	48856	57 00	44 25	0
N	12.0-18.0				132	48855	57 00	44 25	0.5
O	17.0-25.0				1322	48854	57 00	44 25	0
P	23.0-32.0				33 3	48853	7 00	52 00	0
Q	30-40				3353	48852	92 00	76 05	
R	0.0-40.0				3355	48851	92 00	76 05	
S	37.0-50.0				3357	48850	92 00	76 05	
T	48.0-65.0	4.1	1	–	3359	48849	92 00	76 05	1.1
U	55.0-80.0				33 1	48848	1 19	90 80	
V	63.0-80.0				3363	48847	117 00	90 80	1.2

For Use With Overload Relay: LR201, LR202, LR203

BEST AVAILABLE COPY

ALECO CLEAR COOLER FREEZER STRIP DOOR

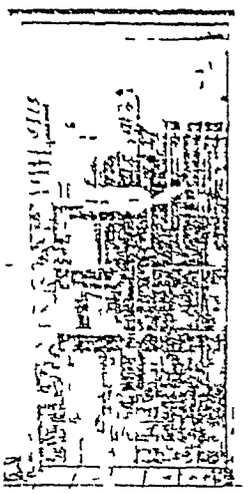

ALECO 90 DAY LIMITED WARRANTY

ENERGY RICH

REPLACEMENT STRIPS

BULK STRIPS

ALECO FLEXIBLE IMPACT TRAFFIC DOORS

ALECO 90 DAY LIMITED WARRANTY

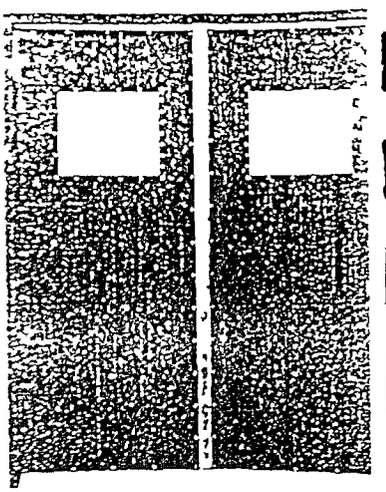

Door Typ	Door Size W	Door Size H	Window Size W	Window Size H	List	Each	Shpg W
Single	[illegible]	[illegible]	[illegible]	[illegible]	4W564	$724 50	[illegible]
Bi Parting	[illegible]	[illegible]	[illegible]	[illegible]	4W565	926 00	920
Bi Parting	[illegible]	[illegible]	24	[illegible]	4W566	1057 00	1040
Bi Parting	[illegible]	[illegible]	[illegible]	[illegible]	4W567	1340 00	[illegible]

STEEL FOLDING GATES

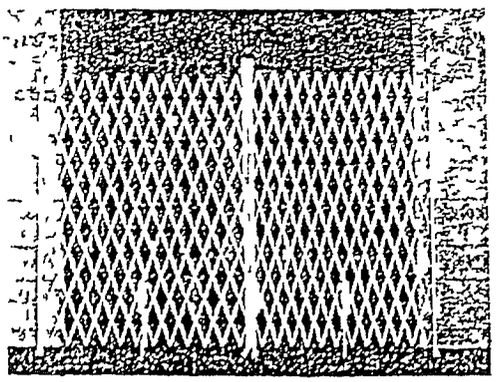

Opening Width	Folded Ht	In Use Ht	Folded Left Side	Folded Right Side	Folding Guard Model	Stock No	List	Each
6 8 ft	[illegible]	[illegible]	9	12	[illegible]	4W946	[illegible]	$175 25
8 10	[illegible]	[illegible]	10	[illegible]	[illegible]	4W947	238 00	216 50
8 10	[illegible]	[illegible]	10	13	[illegible]	4W949	278 00	242 00
10 12	[illegible]	[illegible]	11	[illegible]	[illegible]	4W948	287 00	250 50
12 14	[illegible]	[illegible]	12	15	[illegible]	4W951	393 00	342 00
14 16	[illegible]	[illegible]	13	[illegible]	[illegible]	4W950	390 00	339 50

FOR REPLACEMENT PARTS—SEE PAGE A2 IN FRONT OF CATALOG

BEST AVAILABLE COPY

BEST AVAILABLE COPY

80 Series Analog/Digital Multimeters

FLUKE

BEST AVAILABLE COPY

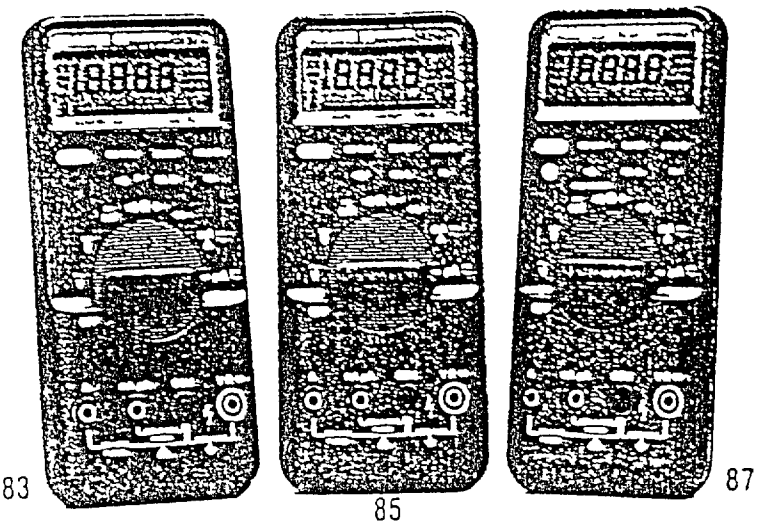

High Performance Meters With 11 Functions and 40 Ranges
For a Wide Variety of Electrical and Industrial Applications

- Min Max Average recording mode with Min Max Alert
- Frequency duty cycle and capacitance measurements
- 1000V rms input protection Input Alert detects wrong input jack connections
- 3 digit 4000 count display updates 4 times per second analog display updates 40 times per second
- 4 1/2 digit mode 1 ms peak hold back lit display and true rms measurements (87 only)
- Touch Hold and Relative modes
- Splash proof and dust proof case EMI shielded
- Protective holster with Flex Stand
- Safety designed test lead set
- Made in U S A

LISTED UL 1244

The new Fluke 80 Series (83 85 and 87) is a family of versatile analog digital multimeters with an impressive range of capabilities including frequency duty cycle and capacitance measurement

Designed for electrical as well as industrial applications the 80 Series features durable construction and several unique safety features

Min Max Average Recording Mode With Min Max Alert

Stores the highest lowest and average of all readings allowing you to monitor a signal for seconds or days Selectable response times allow you to specify the time required to sense changes Min Max Alert gives an audible tone for readings above or below previous minimums or maximums

Frequency Duty Cycle and Capacitance Measurements

Fluke 80 Series meters have a counter for frequency measurements from 0 5 Hz to 200 kHz and duty cycle measurement from 0 1% to 99 9% of cycle All three meters measure capacitance from 10 pF to 5 µF Larger value capacitors may be measured using the analog display in the resistance mode

Input Alert and Overload Protection

Input Alert provides an audible warning if the input jack connections are not correct for the measurement selected This reduces the risk of damage to the equipment being tested and to the meter Fluke 80 Series meters also provide 1 000 volt rms input protection in both ohms and diode test

Fast 4¾ digit 4000 Count Digital Display High Resolution Analog Display

Digital display updates 4 times/second For changing or unstable signals the 87 features a high resolution analog pointer the 83 and 85 use an analog bargraph The 83 and 85 also feature Zoom Mode for higher resolution analog readings Analog display update 40 times per second

4½ Digit Mode 1 ms Peak Hold True rms Back Lit Display (87 Only)

The Fluke 87 is a true rms meter and offers 4½ digit 19 999 count high resolution mode plus rms Peak Min Max hold The back lit display assures readability in poorly lit settings Light shuts off automatically after 68 seconds prolonging battery life

Touch Hold and Relative Modes

Touch Hold captures the measurement beeps and locks it on the display until you are ready to view it Updates automatically updates with each new measurement The Relative Mode remembers a reading and shows the difference between that and any readings that follow

Rugged Sealed Construction

[illegible] case and a specially designed [illegible] the meter under [illegible] [illegible] is a [illegible] finished

Standard Equipment

[illegible] comes packaged with a yellow protective holster compatible with Flex Stand safety designed test leads 9V battery (installed) manual and operator guide

Options/Accessories

A dark grey holster with Flex Stand is available See back cover for additional Fluke measurement accessories compatible with the 80 Series

Basic Accuracy

(% of reading + number of counts)

	83	85	87
DC Voltage	0 3% 1	0 1% + 1	0 1% 1
AC Voltage	1% 3	0 5% + 2	0 7% + 2
True RMS	No	No	Yes
Specified	0 5 kHz	20 kHz	20 kHz
Ohms	0 [illegible] 1	0 2% + 1	0 2% 1
DC Current	0 4% + 2	0 2% + 2	0 2% + 2
AC Current	1 2% 2	0 6% 2	0 6% + 2
Frequency	0 005% 1	0 005% 1	0 005% 1
Capacitance	1% 2	1% 2	1% 2

Battery Life

500 hours typical (alkaline)

Three Year Warranty

One year calibration interval

Size

1 25 H x 3 41 W 7 35 L
(32mm H 87mm W 187mm L)

Weight

12 5 oz (0 36 kg)

Order

Fluke 83 Multimeter with holster
Fluke 85 Multimeter with holster
Fluke 87 Multimeter with holster
C81G Optional Grey Holster
C81Y Replacement Yellow Holster

See back cover for additional compatible accessories

80 [illegible] DMM [illegible] [illegible] [illegible]

ELECTRONIC, 7-DAY, PROGRAMMABLE, 2-CHANNEL TIMERS

OMRON®

E52800

LR65830

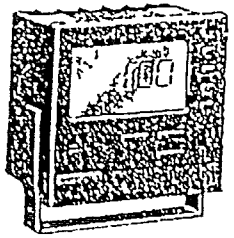

No 1XC72

- 2 channels with independent programming for each circuit
- 7 day programming—a different program possible for each day
- Over midnight settings possible
- Adjustable cycle model
- 24 pulse outputs adjustable from 1 to 59 seconds and 1 60 minutes ideal for ringing bells
- Automatic or manual operation following power failure
- 5 year battery backup for memory protection non replaceable lithium battery included
- Manual override
- Easy to use prompted programming
- Available in either panel or surface/DIN mounting
- Dimensions for No 1XC72 2¾L x 2⅞ W x 2¼ D
- Dimensions for No 1XC73 2¾L x 5W x 2¼ D

ELECTRICAL SPECIFICATIONS				TIMER SPECIFICATIONS			ORDERING DATA				
No of Poles	Contact Load Rating @ 60 Hz Form	Max Amps/Pole Resistive @ 250VAC	Timer Input Volts @ 50/60 Hz	Cycle Length	Max Daily On Off Operations	Mounting	Omron Model	Stock No	List	Each	Ship Wt
2	SPST	15	100 240V AC	1 Min to 1 Week	24	Panel	H5S B	1XC72	$180 00	$178 25	0 7
						Surface	H5S LB	1XC73	180 00	178 25	0 8

ALL YOUR LIGHTING NEEDS FROM ONE SOURCE

- Replacement fluorescent incandescent quartz HID mercury vapor metal halide and high and low pressure sodium lamps
- Flashlights lamps and batteries
- Task lights trouble lights and dock lights
- Fluorescent fixtures and ballasts
- Track and recessed lighting
- Floodlights and outdoor lighting
- Emergency lighting and hazardous location fixtures

BEST AVAILABLE COPY

АКЦІОНЕРНЕ ТОВАРИСТВО

Білицький завод
ТЕПЛОЗВУКОІЗОЛЯЦІЯ

255700 смт Коцюбинське Київська обл вул Будівельна 7
Тел/факс (04497) 72 306 72-647 - комерційний відділ

№ п/п	ПЕРЕЛІК ПРОДУКЦІЇ	МАРКА ВИРОБУ (розміри)	ОД ВИМ	ЦІНА (гривн з ур ПДВ)
1	ХОЛСТ БАЗАЛЬТОВИЙ	СУПЕРТОНКЕ	кг	4 44
		БУДІВЕЛЬНЕ	кг	3 04
2	КАРТОН ТЕПЛОЗВУКОІЗОЛЯЦІЙНИЙ	Тк -5 1180 x 850 x 5	м	3 12
		Тк 1 10 1 80 x 850 x 10	м²	5 52
		Тк-8 1000 x 1000 x 8	м²	2 75
3	МАТИ ЗВ/КОПОГЛИНА СЧІ БЗМ	1 100 1000 x1000x100	шт	25 80
		1-50 1000 x1000x50	шт	18 72
		1-50 бх 1000 x 1000 x 50	шт	15.72
		1-30 1000 x 1000 x 30	шт	19 80
		1-30 бх 1000 x 1000 x 30	шт	11 64
		2 100 1000 x 500 x 100	шт	18 12
		2-50 1000 x 500 x 50	шт	12 80
		2 50 бх 1000 x 500 x 50	шт	10 80
		2 30 1000 x 500 x 30	шт	13 82
		2-30 бх 1000 x 500 x 30	шт	9 72
		4-30 1000 x 1000 x 30	шт	18 42
		4-50 1000 x 1000 x 50	шт	19 56
		4-50 бх 1000 x 1000 x 50	шт	15 00
		5-50 1000 x 500 x 50	шт	12 12
		5-50 бх 1000 x 500 x 50	шт	10 32
		6-50 500 x 500 x 50	шт	6 46
		6-50 бх 500 x 500 x 50	шт	6 84
		7 50 600 x 600 x 50	шт	12 24
		7-50 бх 600 x 600 x 50	шт	9 00
		8-30 600 x 600 x 50	шт	13 92
4	МАТИ ТЕПЛОЗВ/КОІЗОЛЯЦІЙНІ	ТМ 10-15 1100 x 600 x 15	шт	10 68
		ТМ 10-20 1100 x 600 x 20	шт	11 04
5	ПЛИТА ЖОРСТКА ТЕПЛОЗВУКОІЗОЛЯЦІЙНА ГІДРОФОБИЗОВАНА	ПЖТЗ 14 1115 x 850 x 14	м²	16 08
		ПЖТЗ 19 1115 x 850 x 19	м²	19 08
6	СМУГА ТЕПЛОІЗОЛЯЦІЙНА ПДТС	5000 x 100 x 20	м/п	2 25
		5000 x 100 x 30	м/п	2 64
		5000 x 200 x 20	м/п	3 84
		5000 x 300 x 20	м/п	4 92
		5000 x 300 x 30	м/п	6 12
		5000 x 400 x 20	м/п	7 68
		5000 x 400 x 30	м/п	8 64
		5000 x 400 x 40	м/п	9 77
		5000 x 500 x 20	м/п	8 40
		5000 x 500 x 30	м/п	9 36
		5000 x 500 x 40	м/п	9 84
		5000 x 500 x 50	м/п	10 92
		5000 x 500 x 60	м/п	12,96
7	РУЛОННИЙ МАТЕРІАЛ БАЗАЛЬТОВИЙ 6000 x 1000 x	РОМБ С-30	м²	11 76
		РОМБ - С-50	м²	13 60
		РОМБ С 70	м²	19 68
		РОМБ С 100	м²	22 20
8	ШНУР ТЕПЛОІЗОЛЯЦІЙНИЙ	БТШ 10	м/п	0 48
		БТШ 20	м/п	0 60
		БТШ 30	м/п	0 84
9	ШНУР ТЕПЛОІЗОЛЯЦІЙНИЙ НАБИВНИЙ	ШБТН 50	м/п	0 60
10	НИТКА КОМПЛЕКСНА	КНБ 9-50	кг	9 72
11	ЖГУТ БАЗАЛЬТОВИЙ	ЖБТН 0-100	кг	8 52
		ЖБТН 0-150	кг	7,32
		ЖБТН 0-300	кг	6 36
		ЖБТН 14-2640	кг	6 96

Банківські реквізити підприємства Р/рахунок № 26003313492 в Бучанському АК УСБ пос Буча Київської обл , МФО 321165, код підприємства 00292729, ІПН 002927210283

BEST AVAILABLE COPY

Українська державна корпорація промисловості будівельних матеріалів «УКРБУДМАТЕРІАЛИ»

АКЦІОНЕРНЕ ТОВАРИСТВО

Білицький завод ТЕПЛОЗВ[illegible]

255700 смт Коцюбинське
Київської обл. вул. Будівельна 7
Тел. (04497) 72 350
~~Телетайп 13282~~ Звук
Факс (04497) ~~32047~~ 92-5-00

Код підприємства 00292729
Код ст. Білич 322303
Р/рах. [illegible] 246[illegible]5 в Ірпінському відділенні АК УСБ МФО 321165
смт Буча Київської обл.

від _____ № _____
на _____ від _____

АО Беличский завод " Т Е П Л О З В У К О И З О Л Я Ц И Я "
предлагает
высокоэффективные, экологически безвредные изоляционные материалы на основе базальтовых волокон, обладающие малой объемной массой, обеспечивающие полную пожарную безопасность, надежную изоляцию от вулканической жары и космического холода, не выделяют в воздушную и водяную среды вредных для здоровья соединений

Область применения изоляция стен, полов, потолков, металлических и других поверхностей различной конфигурации, тепловых агрегатов, труб и трубопроводов, а также в качестве звукопоглощающего слоя (или наполнения в конструкциях с двойной стеной) в строительстве авиа- и судостроении , автомобилестроении , электротехнической и химической промышленности

КРАТКИЕ ТЕХНИЧЕСКИЕ ДАННЫЕ НА [illegible]

*** БАЗАЛЬТОВОЕ СУПЕРТОНКОЕ ВОЛОКНО БСТВ ***

Соответствует РСТ УССР 1970-86 изм 1

Средний диаметр волокна, мкм, не более	2,0 - 3,0
Плотность, кг/м куб	20,0 - 25,0
Влажность, % ,не более	2
Теплопроводность при 25 град С, Вт/(м К), не более	0,038 - 0,040
Температура применения ,град С	от -260 до +700

* Применяется в качестве тепло- и звукоизоляции, для изготовления теплозвукоизоляционных, звукопоглощающих и фильтрующих материалов и изделий, которые эффективно используются в автомобилестроении, авиастроении , гражданском и промышленном строительстве , теплоэнергетике , а также для грубой очистки воздуха Базальтовое волокно применяется и как армирующий материал

*** КАРТОН ЖЕСТКИЙ ТЕПЛОИЗОЛЯЦИОННЫЙ ТК-1-5 , ТК-1-10 ***

Соответствует ТУ Украины 023 018-95

Формат,мм	длина	1150
	ширина	850
	толщина	5 , 10
Плотность,кг/м куб,не более		150
Гигроскопичность за 24 часа, не более %		0,35
Теплопроводность при 25 град С, Вт/(м К),не более		0,045
Предел прочности при растяжении,МПа, (кгс/см Кв),не менее		0,32(3,2)
Температура применения,град С		от -260 до+700

* Является эффективным заменителем асбокартона

*** ПЛИТЫ ЖЕСТКИЕ ТЕПЛОИЗОЛЯЦИОННЫЕ ПЖТЗ ***

Соответствует ТУ-88 Украины 023 011 93

Размеры,мм	длина	1115
	ширина	850
	толщина	14, 19
Плотность,кг/м куб,не более		280
Сорбционное увлажнение,%,не более		5,0
Теплопроводность при температуре 25град С, Вт/(м К),не более		0,046
Предел прочности при изгибе,МПа,не менее		0,5
Предел прочности при растяжении,МПа,не менее		0,005
Температура применения,град С		от -260 до +700

* Предназначены для изоляции холодных и горячих поверхностей в строительстве, судостроении (для изготовления панелей, отделки судовых помещений в качестве тепловой и звуковой изоляции), машиностроении, при производстве электробытовых приборов, машин и в других областях, несгораемы, нетоксичны Заменитель аналогичных асбестовых плит

*** МАТЫ ЗВУКОПОГЛОЩАЮЩИЕ ТЕПЛОИЗОЛЯЦИОННЫЕ БЗМ ***

Соответствует РСТ Украины 1977-87 изм-1

Размеры,мм	длина	500, 600, 1000
	ширина	500, 600, 1000
	толщина	30, 50, 100, 200
Плотность,кг/м куб		от 34 до 264
Теплопроводность Вт/(м К),не более при 25 град С		0,037
	при 125град С	0,068
Нормальный коэффициент звукопоглощения матов при толщине 15 мм и при частоте 500-2000 Гц		0,35-0,78
Среднеарифметический реверберационный коэффициент звукопоглощения мата толщиной 15 мм,не менее, в диапазоне частот		
	среднечастотный	0,6
	высокочастотный	0,8

* Применяются в качестве звукошумопоглощающего покрытия (наполнения)

*** МАТЫ ТЕПЛОИЗОЛЯЦИОННЫЕ БАЗАЛЬТОВЫЕ ТМ-10 ***

Соответствует РСТ Украины 1981-87 изм-1

Размеры мм	длина	1100
	ширина	600, 700, 800
	толщина	5, 10, 15, 20
Плотность,кг/м куб		от 41 до 66
Теплопроводность при температуре 25 град С,Вт/(м К),не более		0,057
Предельная температура применения, град С		+ 450

* Применяются для изоляции холодных и горячих поверхностей в строительных объектах, авиастроении, судостроении и машиностроении

*** ПОЛОСЫ ДЛИННОМЕРНЫЕ ТЕПЛОИЗОЛЯЦИОННЫЕ ПАТС ***

Соответствует ТУ-88 Украины 023 015 94

Размеры,мм	длина	не менее 5000
	ширина	100, 200, 300, 400, 500
	толщина	20, 30, 40, 50, 60
Теплопроводность,Вт/(м К)		0,040
Предельная температура применения ,град С		+ 450

* Полосы применяются для изоляции труб, тепловых агрегатов, систем общего и специального назначения в различных отраслях народного хозяйства

ДОГОВОР №_____

Белгинское АП "Теплоизоляция", именуемое в дальнейшем "Поставщик" в лице _____
действующего на основании _____
и _____
именуемый в дальнейшем "Покупатель" в лице _____
действующего на основании _____
заключили договор о нижеследующем

1 Поставщик обязуется изготовить и поставить "Покупателю" принять и оплатить продукцию

№ п/п	Наименование продукции	Единица измерен	Всего	В т ч по кварталам			
				I	II	III	IV

2 По качеству поставляемая продукция соответствует (указать ГОСТ, ОСТ, ТУ РСТ)
_____

3 Цены на продукцию договорные Расчеты за поставляемую продукцию осуществляются путем предоплаты

4 Последующие изменения и дополнения по настоящему договору в отношении полного отказа покупателя от поставки продукции могут производиться только по соглашению сторон на основании письменных телеграмм которые являются неотъемлемой частью договора

5 Поставщик предоставляется право досрочной отгрузки продукции

6 Бесплатная норма отгрузки _____

7 Отгрузка продукции производится _____

8 Дополнительные условия
_____
_____
_____
_____
_____
_____

9 Стороны обязуются при исполнении настоящего договора не сворачивать сотрудничество и соблюдению только содержащихся в договоре требований поддерживать деловые контакты и принимать все необходимые меры для обеспечения эффективности развития и хозяйственных связей

10 Настоящий договор действует с _____ по _____

11 Юридические адреса сторон

"Поставщика"		"Покупателя"	
Почтовый	255700 п Кощобинского Киевской обл ул Строительная, 7	Почтовый	_____
Телетайп	132826 "Зеул"	Телетайп	_____
Факс	(04497) 72-547	Факс	_____
Телефоны	сбыт (04497) 72-192 (04497) 72-306 ПТО (04497) 71-605 Зам по коммерческим вопросам (04497) 71-394	Телефоны	_____
Р/счет	581702 в Ирпенском отд Ак УСБ п Буча Киевской обл 255720 МФО 321165	Р/счет	_____
Грузовой	ст Белгинка Юго-Западной ж/д код ст 322203	Грузовой	_____

"Поставщик" "Покупатель"

Фирма «ВИПОЛ» Зак № 6283 т 2000 1993

BEST AVAILABLE COPY

12

Д О Г О В О Р №_____

Беличское АП 'Теплосухоизоляция , именуемое в дальнейшем 'Поставщик" в лице _____
действующего на основании _____
и _____
именуемый в дальнейшем "Покупатель", в лице _____
действующего на основании _____
заключили договор о нижеследующем

1 Поставщик' обязуется изготовить и поставить а "Покупатель принять и оплатить продукцию

Код	Наименование продукции	Единица измерен	Всего	В т ч по кварталам			
				I	II	III	IV

2 По качеству поставляемая продукция соответствует (указать ГОСТ, СТ, ТУ, РСТ)
_____

3 Цены на продукцию договорные Расчеты за поставляемую продукцию осуществляются путем предоплаты

4 Последующие изменения и дополнения по настоящему договору в отношении количества сроков поставки, стоимости продукции могут производиться только по соглашению сторон на основании письма или телеграммы, которые являются неотъемлемой частью договора

5 Поставщик предоставляется право досрочной отгрузки продукции

6 Базисная норма отгрузки _____

7 Отгрузка продукции производится _____

8 Дополнительные условия
_____
_____
_____
_____
_____

9 Стороны обязуются при исполнении настоящего договора не совершать сотрудничество в соответствии только содержащихся в договоре требований поддерживать деловые контакты и принимать все необходимые меры для обеспечения эффективности развития хозяйственных связей

10 Настоящий договор действует с _____ по _____

11 Юридические адреса сторон

'Поставщика'		'Покупателя"	
Почтовый	255700 п Кощобинского Киевской обл ул Строительная, 7	Почтовый	_____
Телетайп	132826 'Зеуз"	Телетайп	_____
Факс	(04497) 72-647	Факс	_____
Телефоны	сбыт (04497) 72-192 (04497) 72-306 ПТО (04497) 71-605 Зам по коммерческим вопросам (04497) 71-394	Телефоны	_____
Р/счет	581702 в Ирпенском отд Ак УСБ п Буча Киевской обл 255720 МФО 321165	Р/счет	_____
Грузовой	ст Беличи Юго-Западной ж/д код ст 322203	Грузовой	_____

"Поставщик" "Покупатель"

5

Фирма «ВИПОЛ» Зак. № 6283 т 2000 1993

BEST AVAILABLE COPY

13

ОАО «Комбинат Стройиндустрии»

[illegible]

[illegible]

№	Наименование [illegible]	Ед. изм.	Цена без НДС	Цена с НДС
1	[illegible]			
	Линолеум [illegible] (нетеплоемкий)	м2	5 35	6 [illegible]
2	Линолеум [illegible] (теплоемкий)	м2	7 28	8 [illegible]
[illegible]	Линолеум [illegible] (теплоемкий)	м2	6 85	7-02
[illegible]	[illegible]	[illegible]	[illegible]	[illegible]
[illegible]	Рубероид [illegible]	[illegible]	[illegible]	[illegible]
9	Пергамин [illegible]	м2	0 50	0-60
[illegible]	[illegible]	[illegible]	[illegible]	1 39
[illegible]	Маты [illegible]	м2	0 25	0 30
[illegible]	[illegible]	м2	2 95	3 51
10	Картон [illegible]	[illegible]	800 00	960 00
11	Трубы [illegible]	шт	37-50	65-70
12	[illegible] 600 мм	шт	243-00	291-60
13	[illegible] 800 мм	шт	357 00	428-40
14	[illegible] 200 мм	шт	460-00	552 00
[illegible]	[illegible] 400 мм	шт	526 50	631 80
[illegible]	[illegible]	шт	45-60	54-72
[illegible]	[illegible]	шт	35-00	42 00
[illegible]	[illegible]	шт	25-00	30-00
[illegible]	[illegible]	шт	25 00	30 00
[illegible]	[illegible]	шт	20-00	24-00
[illegible]	[illegible]	шт	7 00	8-40
24	Перемычка [illegible]	шт	8 70	9-24
[illegible]	[illegible]	шт	1 [illegible]	[illegible]
[illegible]	[illegible]	шт	26-70	32 04
25	[illegible]	шт	35 00	42 00
26	Плиты забора [illegible] высота 2580 длина 2840	шт	75 00	90-00
27	Балка для плит забора	шт	20-00	24-00
28	Плиты тротуарные (500×500 60)	шт	5 00	6 00
29	Товарный бетон М-100	м3	50 00	60 00
30	[illegible] 50	м3	[illegible]	84-00
[illegible]	[illegible] 200	м3	57 50	69-00
32	[illegible] 300	м3	65 [illegible]	78-00
33	М 400	м3	73 75	88 50
34	Цементный раствор М 50	м3	37 50	45-00
35	М 75	м3	41 25	49 50
36	М-100	м3	46-25	55 50
37	М- 50	м3	52 50	63-00

ЖЕЛЕЗОБЕТОННЫЕ ПЛИТЫ ПЕРЕКРЫТИЯ (цены с НДС)

ПК 8 Х 24 Х 12	шт	60 00		ПК 8 Х 48 Х 12	шт	135-00
ПК 8 Х 27 Х 12	шт	67 20		ПК 8 Х 51 Х 12	шт	15[illegible]-00
ПК 8 Х 30 Х 12	шт	70-20		ПК 8 Х 54 Х 12	шт	108 00
ПК 8 Х 33 Х 12	шт	90-00		ПК 8 Х 60 Х 12	шт	139 80
ПК 8 Х 36 Х 12	шт	94-20		ПК 8 Х 63 Х 12	шт	140 40
ПК 8 Х 42 Х 12	шт	1[illegible]				

ПРИМЕЧАНИЯ

- Ширина полотна линолеума 1500 мм 3 6 1 8 толщина линолеума с утеплителем 3 (мм)
- площадь одного рулона линолеума 30 72 с/рубероида-15м2 пергамина 20 м2
- плита ДВП - (1850 1300×12)мм
- клей КДП производится на основе каучука DuPont Dow elastomers
  расфасовывается четырьмя объемами от 5 до 200 кг
- при покупке рубероида или пергамина свыше 1450 рулонов (вагонная норма) скидка 5%

Коммерческий отдел т 295 43 39 294-15 22 295-02-31
Группа маркетинга рекламы и заказов т 294 13 23 294 11 14 факс 295 61-61

BEST AVAILABLE COPY

Spirax Girdlestone Series III станция возврата конденсата

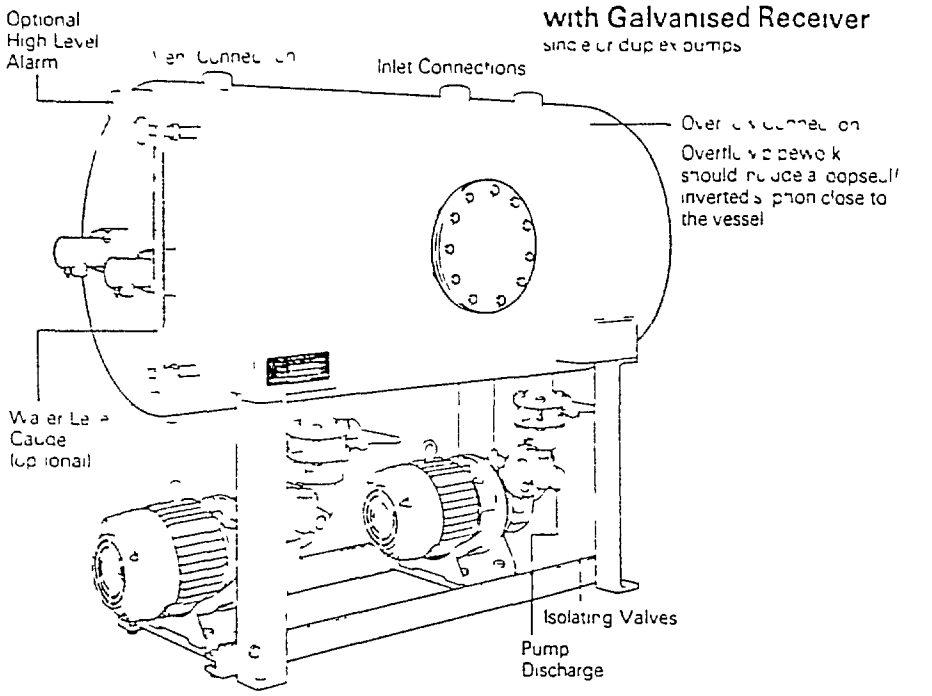

Описание

Серия Girdlestone Series III станции возврата конденсата предназначены для перекачки горячего конденсата который обычно возвращается в котельную используется как питательная вода для котлов Они могут перекачивать до 4 000 кг конденсата в час при 98 С с напором до 30 35 м Станция включает в себя три основные части ресивер насос/насосы и систему управления

Ресивер

Ресиверы из мягкой стали после выпуска были подвержены горячему цинкованию и укреплены на оцинкованной стальной опоре с оцинкованными креплениями Медные ресиверы установлены на прочных подставках к крепежными реиками Оба типа оснащены люками также воздушным клапаном сливной трубой дренажным клапаном и тремя входными соединениями (резьбовые BSPT) соответсвующего размера Испытаны давлением до 2 1 атм

Дополнительно возможно оснащение уровнемерами воды в комплекте с латунными стопорными и спускными кранами

Насосы

Насосы выпускаются из чугуна оснащены Crane механическими затворами и крыльчатками из пушечной бронзы специально предназначенными для работы в условиях чрезвычайно низкого NPSH для перекачки конденсата минимальным всасыванием Они тесно соединены с двигателями TEFC имеющие изоляцию двигателя класса F (температурный подъем класса B с минимальным показателем IP44 и работающими при 2850 об/мин (50 Герц) или 3400 об/мин (60 Герц)

Система управления

Ресиверы оснащены магнитным поплавковым регулятором уровня Одна установка использует это для работы одного насоса имеющего мощность перекачивать в полтора раза большую нагрузку возврата

Каскадные станции используют два насоса каждый имеющий мощность в 1 1 раза больше чем нагрузка возврата

Панель управления включает в себя селекторный переключатель что позволяет рабочему насосу иметь преимущество в перекачивании нагрузки Когда он не может справиться с пиковой нагрузкой тогда согласно каскадному методу управления вводится в действие второй насос Этот прием эффективно обеспечивает автоматическую смену рабочего насоса при электрической или механической неполадке

Электрооборудование требует питания 415 В 3 фазы 50 или 60 Герц и четырехжильный кабель (380 Вольт по специальному заказу) Управляющее оборудование устанавливается в металическом кожухе IP55 Подключающий силовой кабель не входит в комплект

Есть соединение для интерфейса BMS чтобы иметь возможность контролировать работу насоса или момент сброса

Соединения

Один или два насоса с двигателями устанавливаются под ресивером и имеют свой всасывающий трубопровод, включающий запорный клапан и упругое сцепление Поставляемые насосы имеют обратные клапаны (резьбовые BSPT) При двух насосах оба выпуска находятся на одной стороне

Примечание Рекомендуется устанавливать сбрасывающий клапан на напорном трубопроводе чтобы в случае если система приема конденсата имеет производительность меньше чем подача станции клапан может увеличить объем подачи системы предотвращая кавитацию и шум

BEST AVAILABLE COPY

Spirax Girdlestone Series III Condensate Recovery Unit

Спецификация

Spirax Girdlestone Series III станция возврата конденсата имеет четырехзначный код состоящий из кодовых букв и индексов

Кодовые буквы указывают на номинальный размер ресивера

A 100 литров
B 225 литров
C 550 литров
D 750 литров
E 1000 литров

Первые две цифры указывают тип насоса например 59=2V59M насос из классификации USM
Две последних цифры указывают на мощность двигателя например
03=0 37 кВ
22=2 2 кВ
Последние буквы кода обозначают количество насосов например
S=один насос
C=два насоса с каскадным управлением
Таким образом аббревиатура E5940C расшифровывается следующим образом станция с ресивером емкостью 1000 литров и двумя насосами 2V59M каждый с двигателем 4 0 кВ

Определение размера

См TIS 5 104 и TIS 5 105

Информация, необходимая для запроса или заказа

1 Средний расход конденсата возвращаемого в ресивер в кг ч

2 Максимальная температура конденсата

3 Общий напор подачи насоса включая статическое давление и гидравлические потери в трубе и соединениях Вычисляя гидравлические потери надо помнить что мощность насоса является в 1 1 раза больше чем количество конденсата возвращаемое в ресивер при каскадном управлении и в полтора раза больше если установлен только один насос

4 Электрическое питание и напряжение

5 Любые специфические условия при работе

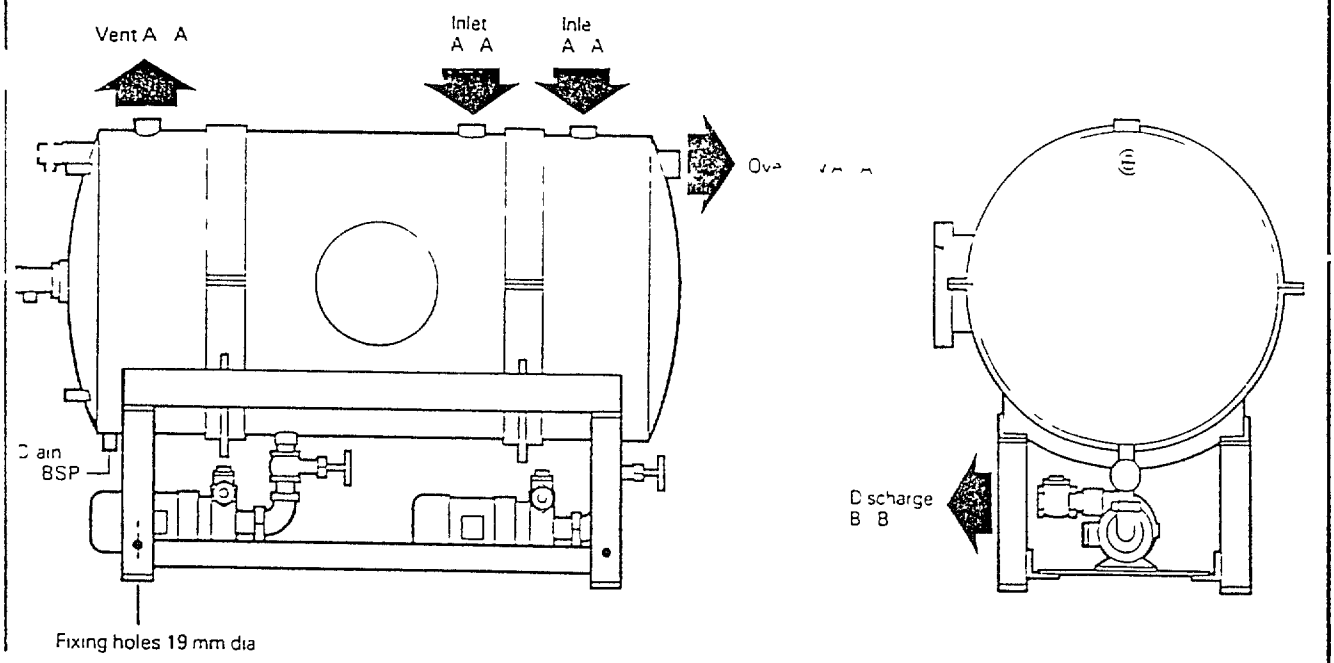

Типы двигателя и насоса, соединения и вес

Станция Насос		Двигатель КВ	Соединения BSP A A	B B	Вес Один насос	Каскад
Unit	Pump	Motor kW	Connections BSP A A	B B	Weight Single Pump	Cascade Pumps
A0203	1 FYB 2	0 37	1 1/2	1	125 kg	145 kg
A2107	1 FYC 21	0 75	1 1/2	1	130 kg	150 kg
A2111	1 FYC 21	1 1	1 1/2	1	135 kg	155 kg
A0507	1 1/2 FYE 5	0 75	1 1/2	1 1/2	140 kg	160 kg
B5511	1 1/2 FYE 55	1 1	2	1 1/2	155 kg	190 kg
B0507	1 1/2 FYE 5	0 75	2	1 1/2	155 kg	190 kg
B0611	1 1/2 F6M	1 1	2	1 1/2	205 kg	275 kg
B0615	1 1/2 F6M	1 5	2	1 1/2	215 kg	285 kg
B0622	1 1/2 F6M	2 2	2	1 1/2	255 kg	295 kg
B5830	1 1/2 F58 M	3 0	2	1 1/2	260 kg	360 kg
B5840	1 1/2 F58 M	4 0	2	1 1/2	280 kg	385 kg
C5511	1 1/2 FYE 55	1 1	2 1/2	1 1/2	240 kg	270 kg
C0615	1 1/2 F6M	1 5	2 1/2	1 1/2	290 kg	400 kg
C0622	1 1/2 F6M	2 2	2 1/2	1 1/2	300 kg	410 kg

Станция Насос		Двигатель КВ	Соединения BSP A A	B B	Вес Один насос	Каскад
Unit	Pump	Motor kW	Connections BSP A A	B B	Weight Single Pump	Cascade Pumps
C5830	1 1/2 F58M	3 0	2 1/2	1 1/2	290 kg	390 kg
C5840	1 1/2 F58 M	4 0	2 1/2	1 1/2	300 kg	400 kg
C5930	2 V59M	3 0	2 1/2	2	320 kg	450 kg
C5940	2 V59M	4 0	2 1/2	2	330 kg	460 kg
C5955	2 V59M	5 5	2 1/2	2	350 kg	485 kg
D5822	1 1/2 F58M	2 2	3	1 1/2	330 kg	435 kg
D5830	1 1/2 F58M	3 0	3	1 1/2	340 kg	445 kg
D5840	1 1/2 F58M	4 0	3	1 1/2	350 kg	455 kg
D5930	2 V59M	3 0	3	2	354 kg	473 kg
D5940	2 V59M	4 0	3	2	364 kg	483 kg
D5955	2 V59M	5 5	3	2	383 kg	500 kg
E5930	2 V59M	3 0	4	2	390 kg	530 kg
E5940	2 V59M	4 0	4	2	400 kg	540 kg
E5955	2 V59M	5 5	4	2	420 kg	560 kg

Armstrong

Inverted Bucket Steam Trap

Cast Iron for Horizontal Installation

Series 800

16 Bar 250 psi
½"-1¼" PN16

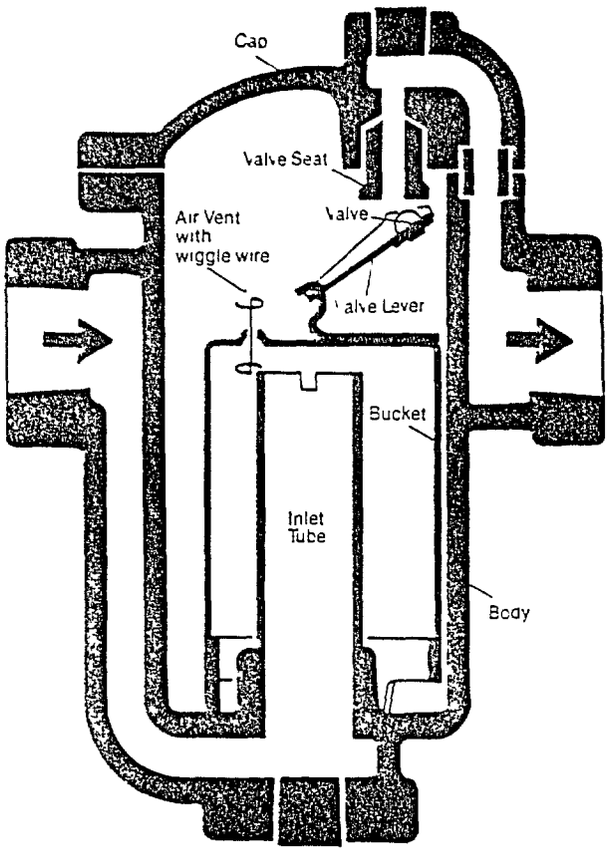

Bucket down–Valve open

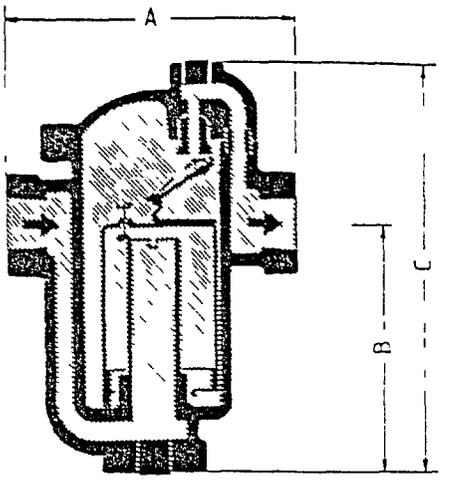

Dimensions–Weight

Type	Size	Dimensions mm A	B	C	Weight kg
800	– 3	127	70	108	2 2
8_1	½ – 3	127	108	175	2 7
8_2	– 3	165	137	232	6 8
8_3	– 1	197	179	299	12 2
81_	1 – 1	229	198	346	20 4

Materials

Body	GG25 ASTM A 278 Class 30
Internals	All Stainless Steel
Valve and Seat	Hardened Chrome Steel
Drain Plug	Carbon Steel

Description

Manufactured from Cast Iron maintenance free and not affected by dirt

A unique leverage system multiplies the force provided by the bucket to open the valve against system pressure The mechanism is free floating thus there are no fixed pivots to create wear or friction

As the mechanism is located at the top no dirt can lie over the orifice Particles of dirt will be held in suspension until expelled by the full differential purging action Normally no strainer is required

The orifice is within the water seal preventing live steam loss thus there is no erosion by high velocity steam Automatic air venting is provided by a small hole in the bucket cleaned by a wiggle wire

Inverted bucket traps require no adjustment and drain continuously allowing no condensate to back up No live steam is needed to operate and they are resistant to water hammer

Complete insulation is possible without affecting performance thus helping further to save energy

Maximum Operating Conditions

Pressure	16 bar (250 psi)
Temperature	232°C (450°F)
Back Pressure	99% of inlet pressure

NOTE
Type 800 has a maximum 10 bar (150 psi) differential pressure
All other Types to a maximum 16 bar (250 psi)
Maximum differential pressure for each orifice size may be found from the curves overleaf

Connections

Screwed BSPT and NPT

Flanged

Optional Extras

Spring loaded internal check valve in stainless steel can be fitted in the inlet tube
Thermic bucket vent to discharge large amounts of air on start up.

Automatic pop drain can be fitted in the lowest point

Bucket vent scrubbing wire for heavy dirt/oil conditions especially on compressed air applications

Specification

Inverted Bucket Trap TYPE _ _ in cast iron with automatic air vent free floating mechanism with the orifice in the top Maximum allowable back pressure 99% of inlet pressure.

Please stipulate
Size pressure rating orifice size connection size maximum working pressure differential pressure and maximum condensate load
Special Tests or Test Certificates must be requested at the time of ordering

Trap Selection

1. Steam traps should never be selected according to pipe size but to condensate load
2. Select the correct type for the maximum condensate load e g TYPE 813
3. In the condensate load curve of the selected Type enter the chart at e g 1200 Kgs/h (2650 lbs/h) and go up to e g 3 5 bar (50 psi)
4. The curve over the point where the lines intersect is the correct size of orifice for your requirements e g ¼ orifice The end of each curve is the maximum differential pressure for that orifice

NOTE
The cold water capacity at start-up condition will be at least 2 1 of the hot condensate capacity

BEST AVAILABLE COPY

Capacity Curves

Differential Pressure psi

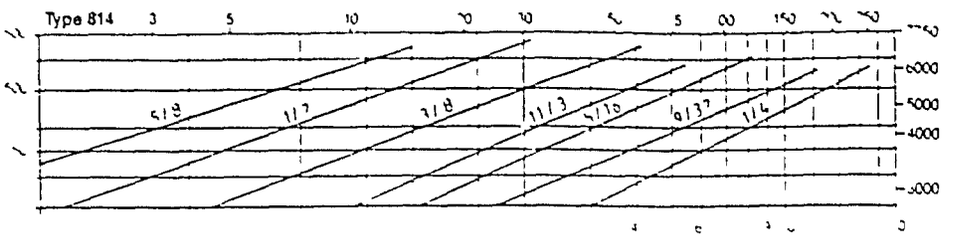

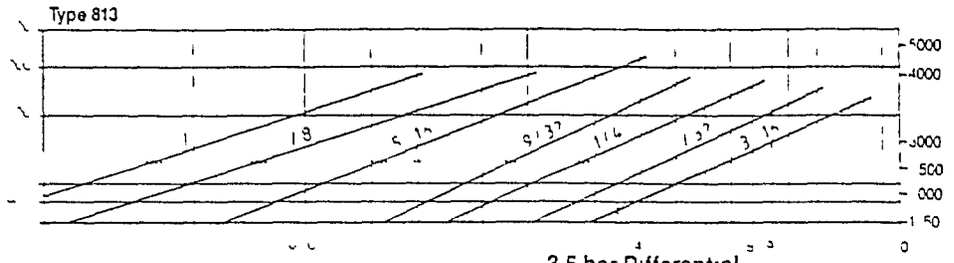

Example
1200 kg h

3 5 bar Differential

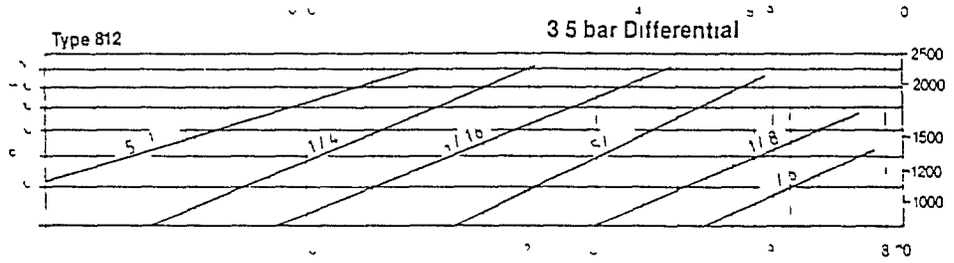

Capacity kg/h

Capacity lbs/h

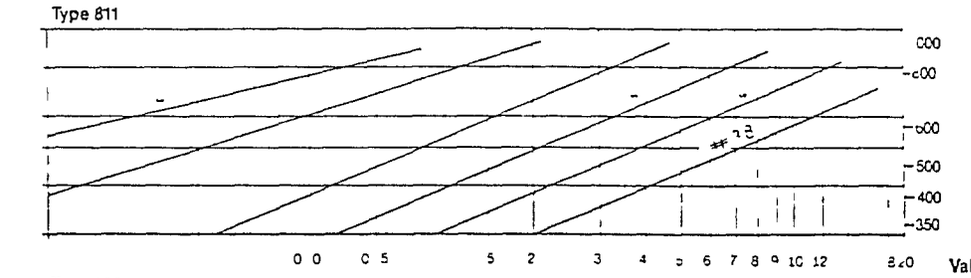

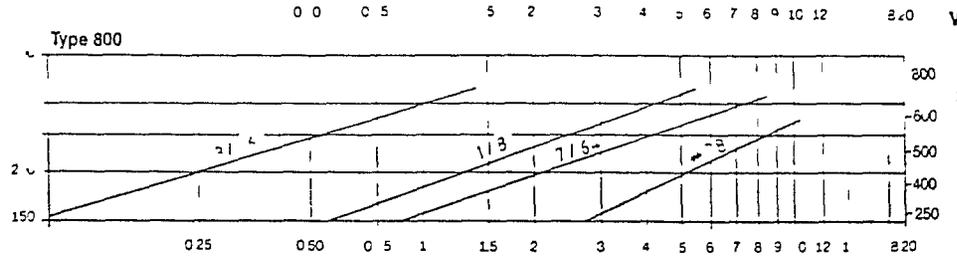

Note
The end of each curve is the max differential press for that orifice

Valve sizes

5/8	= 15 9 mm
1/2	= 12 7 mm
3/8	= 9 [illegible] mm
11/32	= 8 7 mm
5/16	= 7 9 mm
9/32	= 7 [illegible] mm
1/4	= 6 4 mm
7/32	= 5 6 mm
3/16	= 4 8 mm
5/32	= 4 0 mm
1/8	= 3 2 mm
7/64	= 2 8 mm
# 38	= 2 5 mm

Operation

Differential Pressure bar

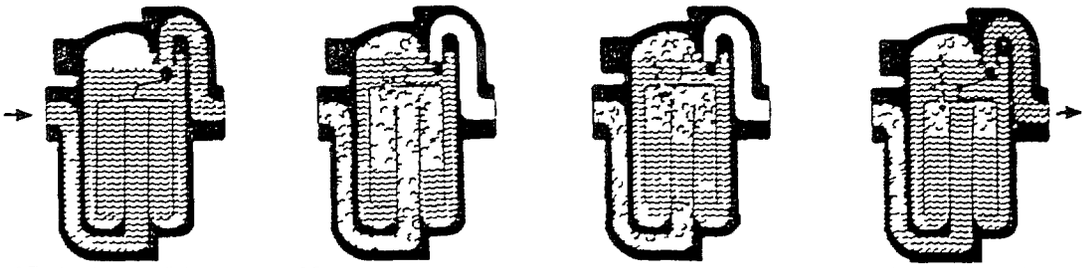

1 The steam trap s nstalled n d a n l ne between steam heated u t and ondensate eturn header At h s po nt bucket is dow and al e s w de open As n t al flood of condensate enters the trap and flows under bottom edge of bucket t f lls trap body and comp etely s bme ges bucket Condensate then discharges through w de open valve to return header

2. Steam also enters trap nder bottom edge of bucket w ere t rises a d collects at op mparting buoyancy Bucket then ses and lifts val e towa ds ts eat unt l val e s snapped t ghtly shut Air and carbon diox de cont nually pass through bucket re t and collect at top of trap.

3 When condensate s sl ghtly abo e floa ng evel the buc et e erts a sl ght ull on the lever The valve does not open however unt l the co de sa e lever ses to the opening l ne for the ex sting pressu e d fferent al between the steam and condensate return header

4 When condensate level eaches open ng line we ght of bucket t mes leverage e ceeds the p essu e holding valve to seat Bucket then sinks and opens trap s ve Accumulated air is d scharged first followed by condensate D scharge continues unt l more steam floats bucket and cycle s repeated

Conden ate | Air | Steam | Flashing condensate

ARMSTRONG MACHINE WORKS S A – 4400 HERSTAL – LIEGE – BELGIUM
Tel 041 640867 Telex 41677 AMTRAP B

United Kingdom Registered Office
Armstrong International Group of Companies,
Holmfirth, Huddersfield HD7 1XN
Tel (0484) 682760 Telex 629759
Fax (0484) 686318

Armstrong

КОНДЕНСАТООТВОДЧИК ПОПЛАВКОВО-ГИДРОДИНАМИЧЕСКИЙ /КПГД/

Предназначен для отвода конденсата от пароиспользующего оборудования и устранения проскоков пара в конденсатную линию

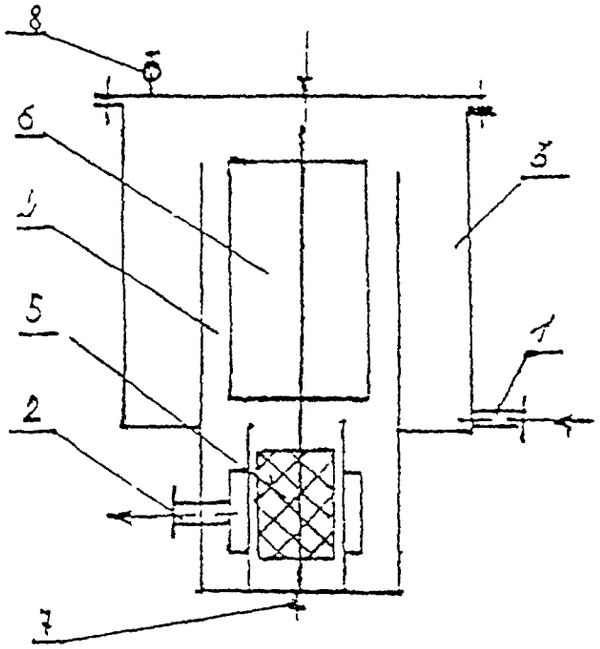

1 Вход пароводяной смеси
2 Отвод конденсата
3 Гидрозатвор
4 Рабочая камера
5 Запорно-дросселирующий поршень
6 Поплавок
7 Регулировочные болты
8 Воздушный краник

Рис 1

ТЕХНИЧЕСКАЯ ХАРАКТЕРИСТИКА

Характеристика конденсатоотводчиков	Марка и номер КПГД				
	1	1м	2	3	3м
Максимальное рабочее давление, атм	10	25	16	10	16
Производительность, т/ч	0,01 - 2,5		2,5 - 6	5 - 20	
Диаметр патрубков входа и выхода, мм	25		32	50	
Срок окупаемости, час	50 - 200		50 - 70	30 - 55	
Габариты, мм	360x290x250		400x330x250	430x360x320	
Масса, кг, в т ч	19	40	45	50	65
корпус (ст 3)	17,8	38,8	43,3	47,8	62,8
запорно-дросселирующий орган (ст нерж)	1,2	1,2	1,7	2,2	2,2

Размеры входного и выходного патрубка по желанию заказчика могут быть изменены

Корпорация Триол
Центр офис РФ в Санкт-Петербурге,
ул. Благодатная 2
Тел/факс (812) 295 0338 2963175,
2964880
Представительство в Украине
ООО "Фундамент"
Украина, 310057 г. Харьков
ул. Сумская, 2
Тел/факс (0572) 124653 127297

Triol

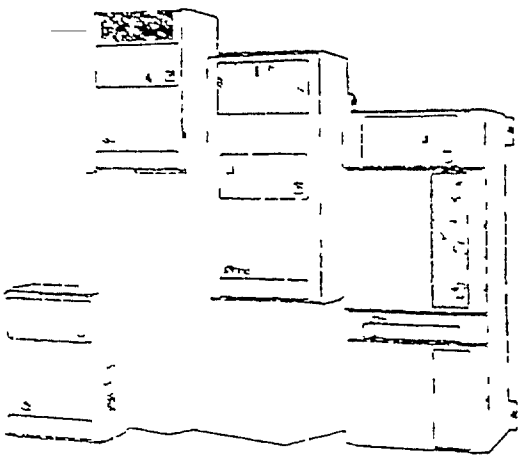

Преобразователи частоты вращения АТ 01 асинхронных электродвигателей разработки и производства Корпорации "Триол"

* Стоимость АТ 01 рассчитывается по ценам [illegible] в момент оплаты и включает в себя НДС. В таблице представлены цены в USD

Мощность двигателя кВт	15	22	37	55	75	90	110	132	160	200
до 11 шт. разных моделей или до $80 000 за 6 месяцев	2000	3200	4290	6650	8090	10190	12075	12705	15990	18990
от 11 до 24 шт. разных моделей или от $80 000 до $140 000 за 6 месяцев	2180	2980	3950	5990	7490	11295	11295	11655	14740	17390
более 24 шт. разных моделей от $140 000 за 6 месяцев	1990	2690	3590	5590	6830	8540	10250	10520	13090	15830

Преобразователи могут иметь исполнения IP-21 или IP-54 (дополнительная согласованная доплата необходима)

* Сроки поставки согласовываются договором в пределах 1-12 недель с момента оплаты в зависимости от размеров и характера поставки

ОСНОВНІ ТЕХНІЧНІ ХАРАКТЕРИСТИКИ

- Кількість підстанцій, які підключають до одного комп'ютера до 16-ти,
- Кількість лічильників на одній підстанції - до 24,
- Види зв"язку / ведення (по комутованій, телефонній, радіо),
- Швидкість передачі даних - 200 - 2400 бод/с,
- Час зберігання (з накопиченням) даних в ПЗЗІ 7 діб,
- Внутрішній таймер і оперативна пам'ять ПЗЗІ на 15 резервне джерело живлення,
- Звернення до ПЗЗІ з комп'ютера в довільний час, але не рідше ніж один раз за 7 діб,
- Дискретність накопичення даних - 0 хвилин
- Система АСОС атестована Держстандартом України і відповідає чинним в Україні стандартам (свід. Держстандарту України N 06 -9 -92 від 09 04 96р)

Система враховує негативний досвід розробки та впровадження попередніх систем (наприклад, ЦТ - 5000) і відрізняється від них надійністю, працездатністю, інформативністю, невибагливістю в експлуатації

Система впроваджена на Івоpівському ДГХП Сірка (задіяні 4 підстанції, 186 лічильників), в західному регіональному диспетчерському центрі Міненерго України (підстанція Підзамче), ДК Львівприлад та на інших підприємствах

Вартість системи залежить від кількості підстанцій на об'єкті і кількості лічильників

Орієнтовна вартість системи з однією підстанцією складає 19 тис гривень Підключення кожної додаткової підстанції орієнтовно коштує 10 тис гривень

В комплект поставки входять програмне забезпечення, технічні засоби, монтаж і пусконаладка підсистеми, підготовка до метрологічної атестації, навчання персоналу, гарантійне обслуговування 12-місяців (після закінчення строку гарантії заключається договір на післягарантійне обслуговування)

Як показує досвід впровадження, термін окупності витрат замовника тільки від виконання організаційно-технічних мероприємств на на основі даних системи не перевищує 2-х місяців

Додаткову інформацію можна отримати безпосередньо в підприємстві Енергозбереження

BEST AVAILABLE COPY

ПІДПРИЄМСТВО

"ЕНЕРГОЗБЕРЕЖЕННЯ"

№ 23882174

290034, м Львів, вул Тернопільська,3/26

факс 72-88-47 тел 79 74 69, 72-88-35

АВТОМАТИЗОВАНА СИСТЕМА ОБЛІКУ ЕЛЕКТРОЕНЕРГІЇ

Система призначена для автоматизованого і дистанційного контролю та контролю споживання електроенергії на промислових підприємствах

Система дозволяє здійснювати
- цілодобове дистанційне спостереження за станом господарювання підприємства,
- оперативний контроль за споживанням електроенергії кожним підрозділом підприємства,
- аналіз оптимальних режимів експлуатації електрообладнання,
- розподіл за електроенергії згідно диференційованих по зонах тарифів (нічний, пікові, напівпікові)

В системі передбачена можливість ручного автономного обліку / лічильник енергоносіїв

ФУНКЦІОНАЛЬНІ ПОЖИВНОСТІ

- Зчитування з персонального комп'ютера (ПК) з довільним моментом часу до пристрою збору-зберігання інформації (ПЗЗІ) для організації даних про споживання електричної енергії по лічильнику за попередній місяць, і від останнього опитування доби,
- Обчислення, систематизація та зберігання даних про споживання електричної енергії (активної та реактивної) за добу, місяць, інший період, тривалість і вартість по кожному приєднанню і сумарно,
- Обчислення вартості по кожній з тарифних зон (нічна, напівпікова, пікова) за добу і за місяць (після тарифних зон встановлюються Міністерством енергетики і електрифікації України),
- Графіки відображення добового споживання електроенергії по кожному приєднанню і сумарно, перегляд графіків на екрані монітора, вивід на друк),
- Документування результатів обліку в вигляді таблиць (за добу, місяць), їх перегляд на екрані монітора та друк,
- Перегляд на екрані монітора даних про облік електроенергії кожного підприємства,
- Синхронізація системного часу,
- Інформація про перевищення рівнів встановленої потужності по кожному з приєднань і сумарно,
- Інші види обробки результатів обліку, на вимогу Замовника

BEST AVAILABLE COPY

АВТОМАТИЗИРОВАННАЯ СИСТЕМА УЧЕТА ЭЛЕКТРОЭНЕРГИИ

[illegible]

Состав системы

[illegible] все согласующие устройства связаны с коллектором ОИ-ОИ общей двухпроводной линией связи любой конфигурации [illegible]

Основные технические данные

Скорость отсчета данного [illegible]
Количество данных [illegible]
Расстояние в [illegible] [illegible]
Расстояние между [illegible] [illegible]
Габаритные размеры [illegible]
- устройство сбора [illegible]
- коллектор [illegible]

[illegible] позволяет [illegible] улучшать показатели качества потребления электроэнергии [illegible] работой электропотребителей по времени [illegible] между ними [illegible] и электрического [illegible] [illegible] электроэнергии [illegible] с помощью системы [illegible] объемы [illegible] (без [illegible]) [illegible] [illegible] сдачи [illegible] [illegible]

Стоимость одного [illegible] системы составляет от [illegible] до [illegible] в зависимости от конфигурации состава и количества каналов.

Система внедрена на нескольких [illegible] предприятиях, при этом эффективность [illegible] от выполнения [illegible] [illegible] [illegible] [illegible] [illegible]

Адрес предприятия разработчика:
УКРАИНА, 290005, г. Львов, ул. Р. Ромена, 5 предприятие "Энергосбережение" Т. (0322) 797417, 728335

BEST AVAILABLE COPY

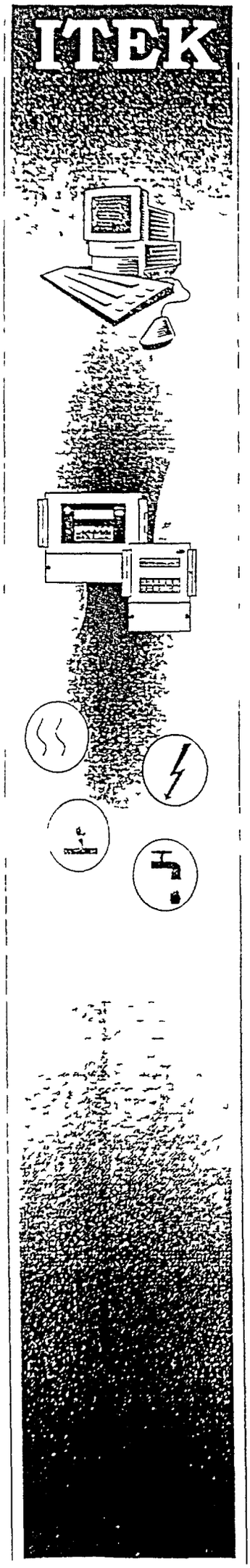

КОМПЛЕКСНІ СИСТЕМИ ОБЛІКУ ТА КОНТРОЛЮ ЕНЕРГОВИКОРИСТАННЯ

НДІ автоматики та енергетики (енергія) при НТУ України «Київський політехнічний інститут» у співробітництві з науково-виробничим підприємством "ЕНЕРГІЯ+" поєднали свої ресурси для ефективного вирішення різноманітних задач в галузі управління енерговикористанням по таким напрямкам як

Підвищення ефективності енерговикористання, що включає

- аналіз прогноз та контроль споживання енергії,
- багатокритеріальна оптимізація розподілу ресурсів
- розробка тарифів на електроенергію (враховуючи екологічні аспекти)
- управління енерговикористанням в умовах України
- розробка загальних вимог до правил до вимірювальних приладів
- розробка основних вимог щодо інструктування для Державного Енергонагляду

Послуги «під ключ»

- енергоаудит і оцінка потенціалу енергоефективності (приймаючи до уваги специфічні економічні умови в період колишнього СРСР та на сьогоднішньому етапі розвитку України)
- встановлення розподілених систем вимірювання, контролю та обліку енергії та енергоносіїв в реальному часі
- рекомендації щодо енергоефективності (приймаючи до уваги виробничий процес різні економічні та технологічні критерії)
- контроль за впровадженням заходів щодо енерговикористання,
- навчання представників замовника
- надання інформаційних послуг

Основні партнери

- Державний комітет України по енергозбереженню
- Національна комісія з питань регулювання в енергетиці
- Міністерство енергетики та електрифікації України
- НДЦ електроенергетики України
- УкрЦСМ Держстандарту України
- Відділення енергетики АІН України
- Інститут енергозбереження та енергоменеджменту
- ВАТ «ПОТЕНЦІАЛ» (м. Макарів)
- СП «Укрсистем» (м. Горлівка)
- Компанія «ЕСКО Схід» (м. Запоріжжя)
- Компанія «ЕСКО Захід» (м. Івано-Франківськ)

Семейство средств учета и контроля энергии ITEK

1 **Средства измерения и учета** *Соответствуют метрологическим характеристикам и предназначены для постоянного или периодического (экспресс анализа) измерения регистрации физических величин*

Электроэнергия

[illegible]

ITEK 210, ITEK 310 предназначены для коммерческого и технического учета электроэнергии (дифференцированного по времени) и построения автоматизированных систем учета и контроля использования электроэнергии (АСУЭ) совместно со счетчиками электрической энергии трехфазными индукционными снабженными устройствами формирования импульсов типа Е-ЕС Е370 УП 1 УП 2 УП 3 СХ5000 или электронными (Siemens Landis&Gyr Alpha ABB др) имеющими импульсный выход

Поддерживают 6- (для ITEK 210) и 12 (для ITEK 310) каналов учета 4 тарифные зоны суточный график по всем каналам учета минимум 5 суток 2 независимых информационных интерфейса

ITEK 210 может быть использован совместно или взамен установленных систем ЦТ5000 (путем подключения к существующей матрице первичных измерительных преобразователей) Внесен в Гореестр средств измерений Украины

ITEK-410 устройство на 4 канала учета аналогичное предыдущим Дополнительно к ним оно поддерживает также тарифы дифференцированные по энергии и мощности а также слежение за процессом потребления и позволение если этот режим активизирован) Суточные графики хранятся по 4 каналам не менее 1 месяца

ITEK-010 многоканальный [illegible] определитель количества качества электрической энергии

Тепловая энергия, вода, пар, воздух, газ

[illegible] ITEK x2x позволяют потребителям осуществлять учет ресурсов с высокой точностью и рассчитываться за потребленный ресурс по факту а не пропорционально занимаемой площади

ITEK-220, ITEK 320 Предназначены для использования в системах автоматизированного коммерческого учета и телеметрического контроля отпуска и потребления жидкости газа пара и тепловой энергии совместно с любыми стандартными первичными измерительными преобразователями расхода температуры давления и перепада давлений имеющими нормированные выходные параметры у поставщиков (ТЭЦ теплосети котельные) и потребителей (промышленные предприятия объекты жилищно коммунального хозяйства) Изделия ITEK x20 разработаны в соответствии с требованиями РД 50 213 80 ПР34 70 010 85 ГОСТ 6651 84 и рекомендацией R75 МОЗМ)

Предназначены для объектов 1 группы учета (до 4 х) со сложной конфигурацией подающих и обратных трубопроводов (ITEK 220) и 1 или 2 группы учета (один объект) (ITEK 320)

ПРД широкодиапазонный преобразователь разности давлений измерительный ПРД предназначен для работы в системах автоматического контроля регулирования и управления технологическими процессами и обеспечивает непрерывное преобразование измеряемого параметра в унифицированный токовый выходной сигнал Является быстродействующим преобразователем и может использоваться для преобразования пульсирующих разностей давлений в унифицированный токовый сигнал с постоянной времени до 2 мс (предельно допускаемое рабочее избыточное давление 1 6 МПа и 40 Мпа)

2 **Средства контроля и управления** *Включают разнообразные средства создаваемые и адаптируемые под проект объединенные единством распределенной базы данных и протоколов обмена данными с другими членами семейства*

- коммуникационные средства (поддержка различных коммуникационных сред телефон /коммутируемый выделенный/ радио ВЧ связь промышленные последовательные интерфейсы)
- программные средства для организации распределенных баз данных реального времени анализа данных управления режимами оптимизации распределения ресурсов и др)

Программно технические средства семейства ITEK удовлетворяют современным требованиям по надежности аппаратной и информационной совместимости с продукцией других производителей

Некоторые члены семейства ITEK уже реализованы и находятся в промышленной эксплуатации более года

РЕГУЛЯТОР ТЕМПЕРАТУРИ РТ-0193

Призначений для вимірювання і автоматичного регулювання температури різних технологічних процесів

Працює в комплекті з термоперетворювачами опору і перетворювачами термоелектричними

Забезпечує -регулювання температури двопозиційне, трипозиційне і пропорційне,
-вимірювання температури,

Діапазон контрольованих температур відповідно, для НСХ, °С	50М, 100М від мінус 50 до 150 50П, 100П від мінус 200 до 600 ХА від мінус 50 до 1200
Діапазон регулювання зони зворот °С	від 1 до 15
Похибка регулювання, %	2
Похибка вимірювання, %	1
Роздільна здатність, °С	0,1, (1)
Напруга живлення від мережі постійного струму В від мережі змінного струму (з блоком живлення)	 24 (12) 220 В, 50 Гц
Зовнішні комутовані кола	220 В, 0,1А змінного струму 220 В, 0,3А постійного струму
Маса не більше, кг	0,3
Габаритні розміри, мм	96×80×10

Можливі зміни технічних характеристик (діапазон НСХ похибка вимірювання) комплектування термоперетворювачами різних конструкцій

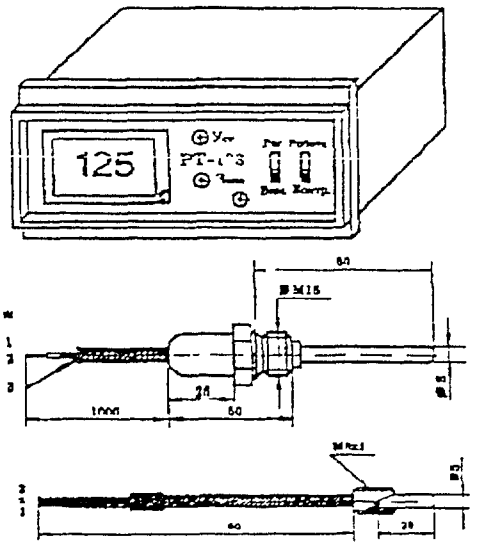

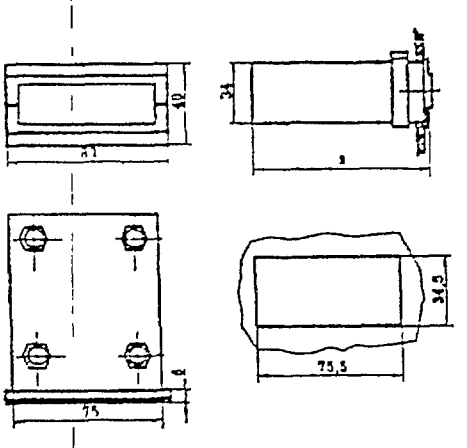

* Один з варіантів термоперетворювачів

Україна, 290039, м.Львів, вул. Наукова, 1
НВО "Термоприлад"
тел (0322) 39 07 40
факс (0322) 63 13 61
телетайп 734202 ЗВОД

85

Регулятор уровня LC 1000

Описание

Регулятор уровня LC 1000 производства Spirax Sarco является двухканальным уровневым регулятором с дуальным напряжением для использования вместе с пробниками проводимости в электропроводящих жидкостях. Регулятор пригоден для использования практически во всех видах промышленной воды начиная с конденсата и питательной воды для котлов заканчивая солевыми растворами и может использоваться в воде с таким низким уровнем электропроводимости как 10 микроСименс см.

Регулятор LC 1000 имеет два уровня чувствительности и волновой фильтр что позволяет давать точный ответ при разных уровнях проводимости и условиях турбулентности возможных в резервуарах и котлах с высокой проводимостью.

Две функции выбираются путем включения регулятора перед установкой в соответствующий напряжение источника электропитания и для обеспечения функции необходимого контроля уровня и сигнализации уровня.

Для использования в конкретных условиях нанесена на переднюю панель для установки на стандартную пластину предусмотрено окно фильтра.

Применение

Регулятор LC 1000 осуществляет следующие функции которые выбираются при помощи включения на печатной плате с восьмью переключателями

- сигнализация низкого и высокого уровня
- две сигнализации низкого уровня
- две сигнализации высокого уровня
- наполнение насосом по сигнализации низкого уровня
- опорожнение насосом по сигнализации низкого уровня
- наполнение насосом по сигнализации высокого уровня
- опорожнение насосом по сигнализации высокого уровня

Полная инструкция по подготовке и работе представлена в Руководстве по установке и техническому обслуживанию поставляемому вместе с прибором.

Ограничение применения

Номинальный коэффициент защиты футляра	IP40
Максимальная температура внешней среды	55 C
Максимальная длина кабеля (между регулятором и пробником)	30m

Установка

ПРЕДУПРЕЖДЕНИЕ Отключите источник электропитания до разборки регулятора, поскольку зажимы под напряжением будут оголены в основании регулятора

Регулятор должен быть установлен в футляре или приборной доске чтобы обеспечить защиту от воздействии окружающей среды Spirax Sarco может предложить пригодные футляры. Регулятор может быть установлен на верхней головке DIN рельсы при использовании имеющегося монтажного зажима или же зажим можно удалить и непосредственно привинтить основание регулятора к рамочной пластине футляра.

Для пробника необходим экранированный кабель. Для этого подходит кабель Pirelli FP200 или Delta Crompton Firetuf OHLS 3 или 4 жильный 1 кв мм. Такой же тип кабеля может быть использован и для проводки к источнику электропитания. Конкретные схемы электропроводки и возможные установки переключателей представлены в Руководстве по установке и техническому обслуживанию.

Технические характеристики

Напряжение источника питания

Установка 230 В	198В	264В
Установка 115 В	99В	121В
Частота	50	60Гц

Максимальное потребление электроэнергии 6VA

Материалы

Корпус	Полистирен
Опорная пластина	ABS (укрепленная)

Обозначение

Регулятор LC 1000 производства Spirax Sarco

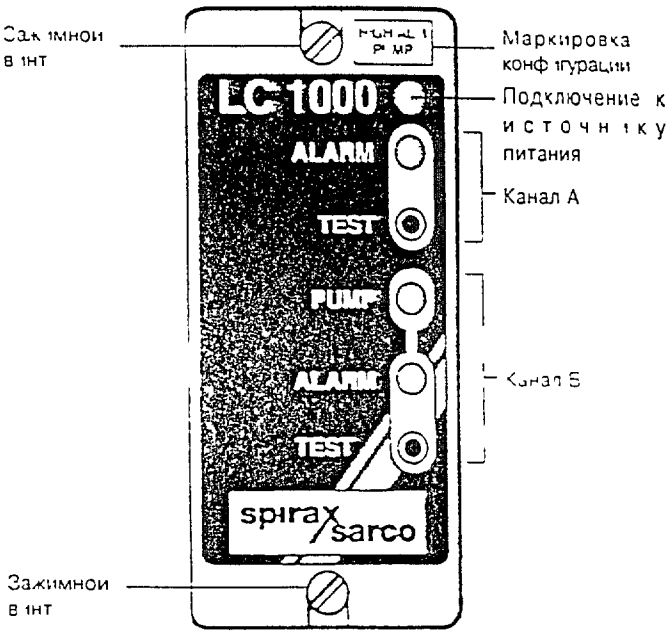

Общая схема электропроводки

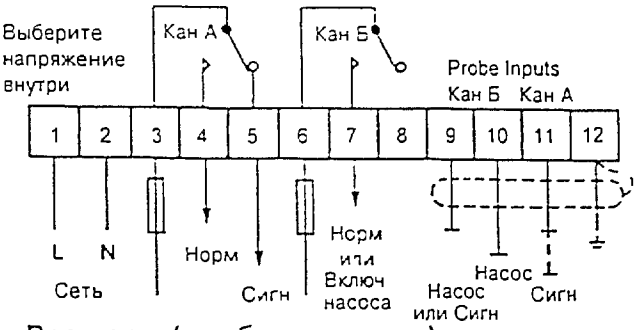

Размеры (приблизительно), мм

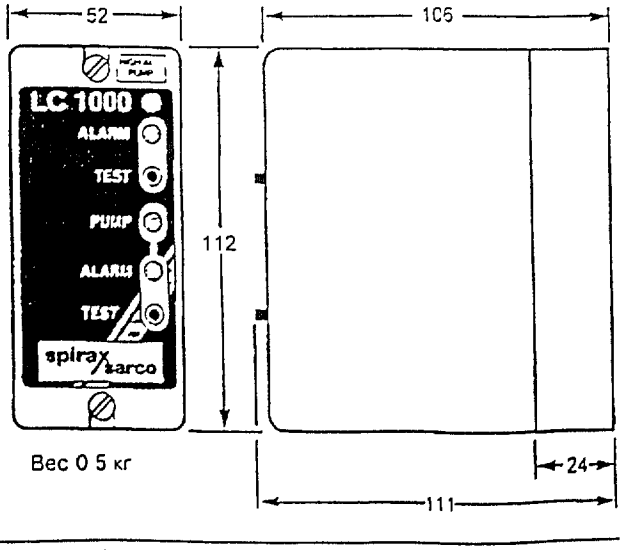

Вес 0 5 кг

Использование данного изделия может быть ограничено если местными правилами эксплуатации устанавливаются параметры или указанных в интересах развития и усовершенствовании изделия мы оставляем за собой право изменять технические характеристики © Copyright 1996

86

spirax sarco

Пробник уровня LP 10-3

- Для регулировки уровня и сигнализации
- Пригоден при давлении до 32 бар (237°C)
- Детали из нержавеющей стали и покрытые PTFE

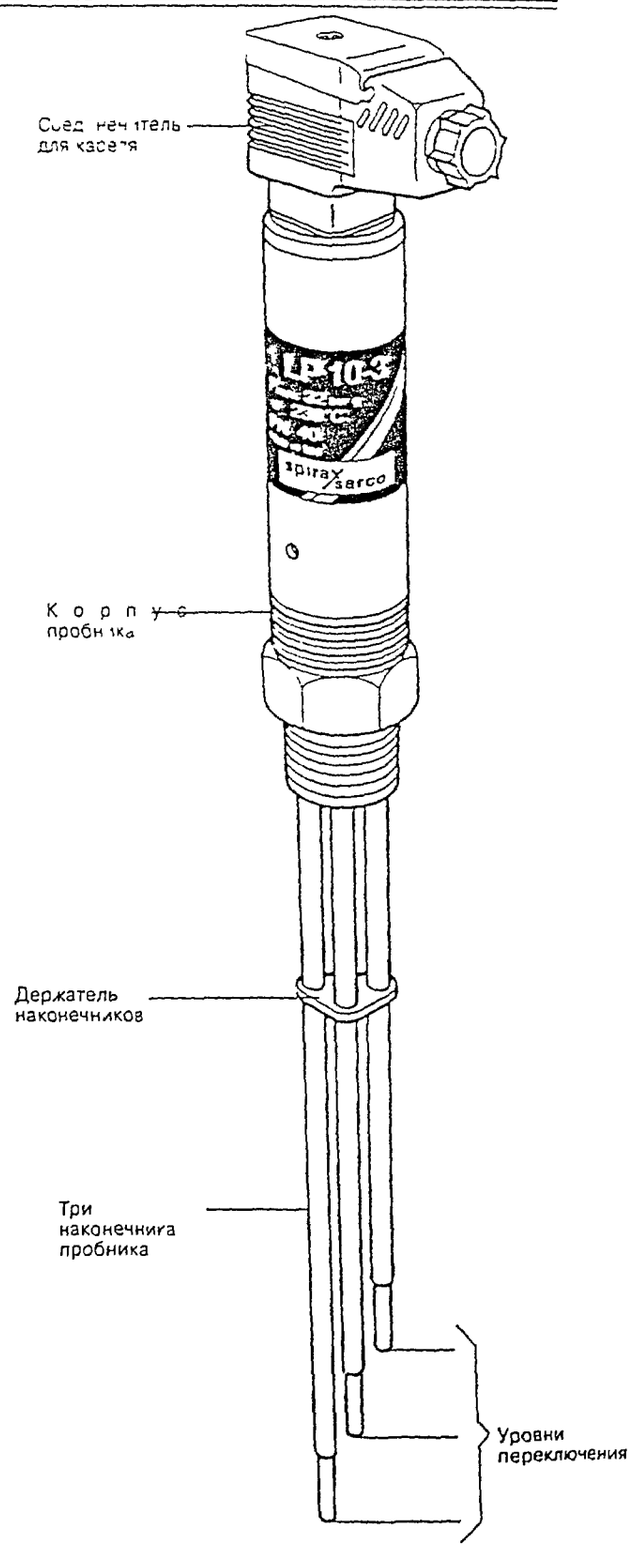

Описание

Пробник уровня LP 10 3 производства Spirax Sarco используется вместе с регулятором уровня LC1000 фирмы Spirax Sarco для обеспечения сигнализации регулировки уровня или сигнализации в паровых котлах водогрейных котлах резервуарах других жидкостях

Корпус пробника заземлен через соединение 1 по BSP и стенки резервуара обычно отводит заземление

Пробник может также использоваться в бетонных или пластмассовых резервуарах путем использования одного из наконечников для заземления или при оснащении отдельными стержнем или пластиной для заземления

Пробник уровня LP 10 3 имеет три наконечника распознающих уровень длина которых определяется при установке в соответствии с необходимыми уровнями переключения

Когда наконечник погружен в жидкость он замыкает электрическую цепь на землю

Когда уровень падает ниже наконечника сопротивление или становится высоким и на регулятор поступает сигнал наконечник не находится в воде

Ограничение применения

Номинальное давление	PN 40
Максимальное давление	32 бар
Максимальная температура	239 C
Максимальная внешняя температура	70 C
Номинальный коэффициент защиты	IP65
Максимальная длина кабеля (от пробника до регулятора)	30м

Установка

Полное руководство по установке и техническому обслуживанию поставляется с каждым прибором

Наконечники пробника укорачиваются до необходимой длины с помощью ножовки перед установкой для обеспечения необходимых уровней переключения

Изоляция PTFE после этого обдирается на 40 мм на концах стержней

При использовании в котлах или резервуарах со значительно изменяющимися условиями турбулентности рекомендуется установить защитную трубку с внутренним номинальным диаметром 80мм (3)

Техническое обслуживание

Хотя и не требуется никакого специального ухода системы регулировки уровня воды в котле нуждаются в периодических регулировках и осмотрах что описано в других разделах справочника

Использование данного изделия может быть ограничено если местными правилами эксплуатации установлены параметры ниже указанных В процессах развития и усовершенствования изделия мы оставляем за собой право изменять технические характеристики © Copyright 1994

87

spirax sarco

Поплавковый конденсатоотводчик FT 43 DN 15-50

Описание

FT43 — чугунный поплавковый конденсатоотводчик со встроенным воздушником. Может быть как горизонтальным с фланцевыми соединениями, так и с вертикальными — FT43V.

В конденсатоотводчике с горизонтальным соединением возможна дополнительная установка ручного игольчатого клапана, работающего как паровыпускной затвор (ПВЗ) FT43 C. При необходимости в крышке можно сделать отверстие с соединением ³/₈ BSP или NPT для установки крана осушки.

Ограничения применения (ISO 6552)

Максимальные условия конструкции корпуса PN 16
PMA — Макс. допустимое давление 16 атм
TMA — Макс. допустимая температура 220 C
Холодное гидравлическое испытание 24 атм

Рабочий диапазон

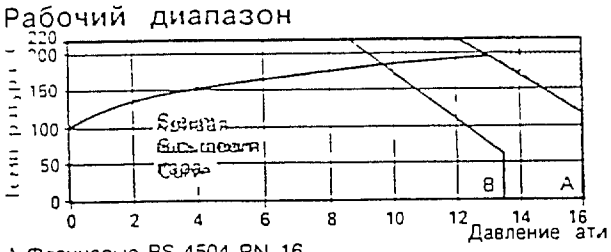

A Фланцевые BS 4504 PN 16
B Фланцевые ANSI 150 (DN15 и 20) ANSI 125 (DN25 до 50)

Изделие не используется при данных параметрах

PMX — Макс. дифференциальное давление

DN	FT43 4 5	FT43 10	FT43 14
15 до 50	4 5 атм	10 атм	14 атм

Конденсатоотводчики 40/50DN имеют ограничение PMO равное ΔPMX

Размеры и соединения

DN 15 20 25 40 и 50 стандартные фланцы BS 4504 и PN 16
При необходимости возможна поставка с фланцами ANSI 150 с отверстиями

Материалы

№	Деталь	Материал	Спецификация
1	Корпус	Чугун	DIN 1691 GG 25
2	Болты крышки DN 15 25	Сталь	BS 3692 Gr 8 8
	Штифт крышки	Сталь	BS 3692 Gr 8 8
	Гайки крышки		
3	Прокладка крышки	Армисованый листовой графит	
4	Крышка	Чугун	DIN 1691 GG 25
5	Седло клапана DN 15 20 25	Нерж. сталь	BS 970 431 S29
	(Для вертикальных конденсатоотводчиков DN 15 и 20)		
	Узел главного клапана с антикоррозийным дефлектором DN 40 50	Нерж. сталь	BS 3146 Part 2 Anc 2
6	Прокладка седла клапана DN 15 20 25	Нерж. сталь	BS 1449 304 S11
	Прокладка узла главного клапана DN 40 50	Армированный листовой графит	
7	Узел шарнирной стойки	Нерж. сталь	BS 4183 18/8
	Болты DN 15 20 25		
	Болты узла главного клапана DN 40		BS 970 304 S16
	Штифты и гайки DN 50		BS 6105 A4 80
8	Шаровой поплавок и рычаг	Нерж. сталь	BS 1449 304 S16
9	Воздушник	Нерж. сталь	
11	Узел ПВЗ	Нерж. сталь	BS 970 303 S21
12	Прокладка ПВЗ	Мягкая сталь	BS 1449 CS4
13	Уплотнение ПВЗ	Графит	
14	Опорная рамка	Нерж. сталь	BS 1449 304 S16
15	Шарнирная стойка	Нерж. сталь	BS 1449 304 S16
16	Шарнир	Нерж. сталь	
17	Антикоррозийный дефлектор (только DN15 20 и 25 (гориз.) и DN15 и 20 (верт.)	Нерж. сталь	BS 970 431 S29
18	Входной отражатель (DN40 и 50)	Нерж. сталь	BS 1449 304 S15

FT 43
DN 15 и 20

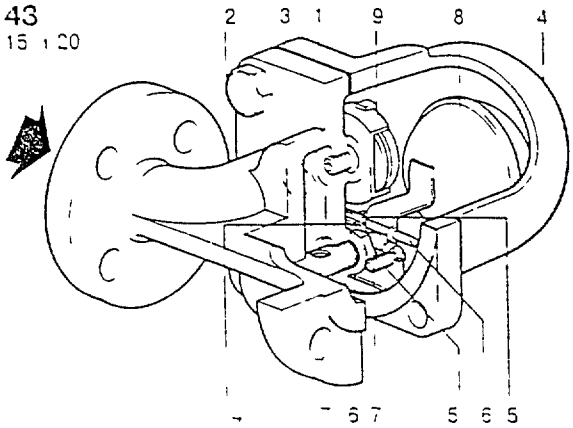

FT 43
DN 25

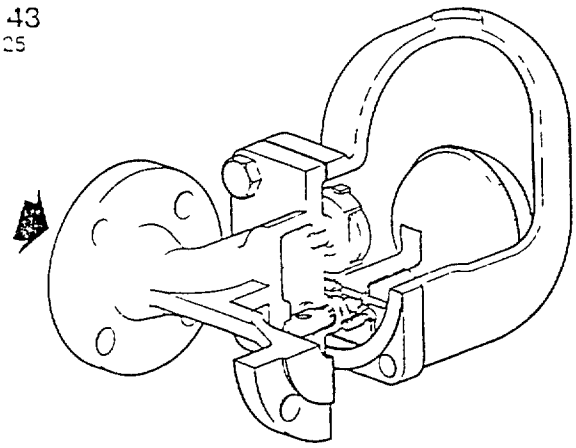

FT 43
DN 40 и 50

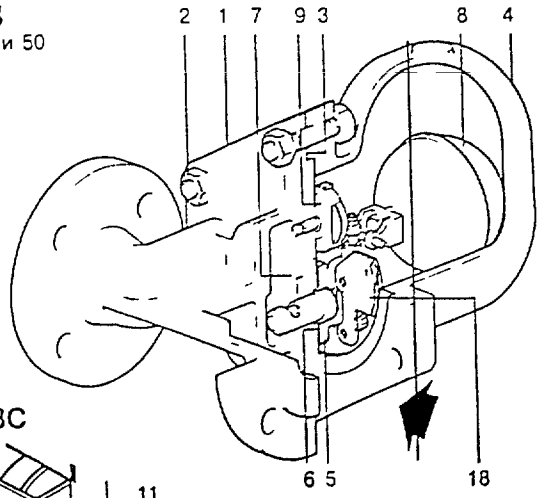

FT43C

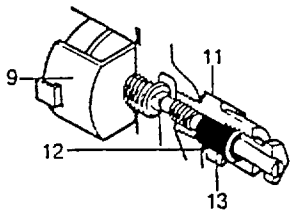

Местные правила эксплуатации могут ограничивать использование этого изделия значениями параметров ниже указанных. Для совершенствования данного изделия мы оставляем за собой право изменять его технические характеристики.

© Copyright 1995

88

spirax sarco

Дисковые обратные клапаны типа DCV 1, 2, 3

Описание

Дисковые обратные клапаны типа DCV 1, 2 и 3 разработаны для установки между фланцами. Они удобны для применения в широком спектре сред в технологических линиях, системах горячей воды, пара и конденсата.

Ограничение применения

DCV1

Корпус соответствует максимальному давлению PN16

PMO Максимальное рабочее давление 16 ат

TMO Максимальная рабочая температура 260 C

Максимальное давление холодного гидравлического испытания 24 ати

Минимальная рабочая температура 50 C

	DCV2 DCV3
Корпус соответствует ат. макс. давлению	PN40 PN40
PMO Максимальное рабочее давление	[illegible]
TMO Максимальная рабочая температура со стандартной пружиной или пружиной для сильных нагрузок	300 C 300 C
Без пружины	300 C 400 C
Высокотемпературная пружина из никелевого сплава	400 C
Минимальная рабочая температура	50 C 50 C

Диапазон рабочих параметров

DCV1

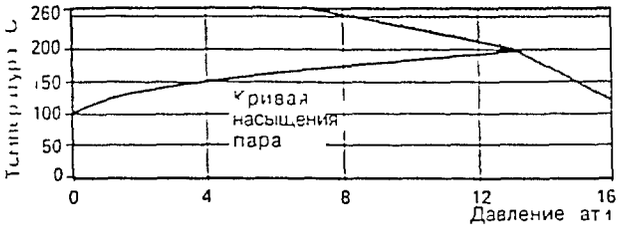

DCV 2 и DCV 3

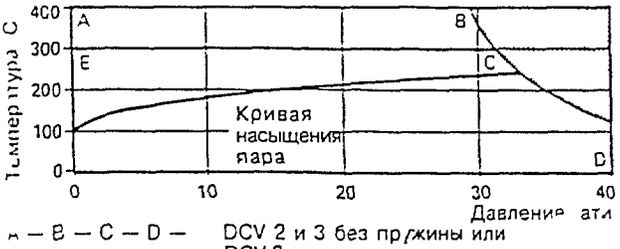

A — B — C — D — DCV 2 и 3 без пружины или DCV 3 с пружиной из никелевого сплава

E — C — D — DCV 2 и 3 со стандартной пружиной

Нерабочая область для данного изделия

Размеры и соединения

DN 15 20 25 32 40 50 65 80 100

DCV 1 2 и 3 могут быть установлены между E and H типа BS10 BS4504/DIN PN6 10 16 25 40 JIS 5 10 16 20 фланцевые соединения со следующими исключениями —

DN 40 50 80 и 100 — не устанавливаются между фланц. соединениями JIS 5

DN 65 и 80 — не устанавливаются между фланцевыми соединениями E типа BS10

Возможный выбор пружин

Жесткие пружины для схем котловой питательной воды. Для размеров до DN 65 в моделях DCV1 и DCV2

Никелевый сплав для температуры для температуры выше 400 C для всех размеров только в моделях DCV3

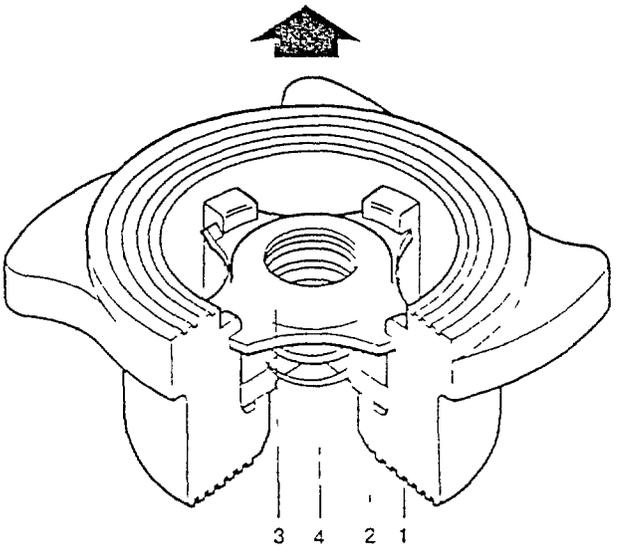

Возможный выбор мягких уплотнений

Viton (для масел и газов)—температурные ограничения 15 C до + 250°C

EPDM (для воды)—температурные ограничения 50 C до + 150 C

Материалы

№	Деталь		Материал	
1	Корпус	DCV1	Бронза	WS 2 1050
		DCV2	Ферритная нержавеющая сталь	WS 1 4313
		DCV3	Аустенитная нержавеющая сталь	WS 1 4581
2	Диск		Аустенитная нержавеющая сталь	BS 1449 316 S 11
3	Фиксатор пружины		Аустенитная нержавеющая сталь	BS 1449 316 S 11
4	Стандартная пружина		Аустенитная нержавеющая сталь	BS 2056 316 S 42
	Пружина для сильных нагрузок		Аустенитная нержавеющая сталь	BS 2056 316 S 42
	Высокотемпературная пружина		Никелевый сплав	N monic 90

Открывающее давление, матм

Стандарт перепад давлении с Нулевым Потоком и пружины из никелевого сплава

ω	Направление потока								
DN	15	20	25	32	40	50	65	80	100
ω	25	25	25	27	28	29	30	31	33
ω	22 5	22 5	22 5	23 5	24 5	24 5	25	25 5	26 5
ω	20	20	20	20	20	20	20	20	20

Там где требуется низкое значение открывающего давления возможна установка клапанов без пружин в вертикальных трубах с направлением потока снизу вверх

Без пружины

ω	2 5	2 5	2 5	3 5	4	4 5	5	5 5	6 5

Жесткие пружины около 700 матм

Стандарты запирания

Стандартные клапаны соответствуют DIN 3230 часть 3 BN 2 Возможен заказ клапанов соответствующих DIN 3230 часть 3 BO3 Мягкие уплотнения соответствуют DIN 3230 часть 3 BN1 и BO1 и поставляются для различных перепадов давления

Стандарты

Изделие разработано и производится в соответствии с BS 7438

Использование данного изделия может быть ограничено если местными правилами эксплуатации установлены параметры ниже указанных

С целью совершенствования данного изделия мы оставляем за собой право изменять его технические характеристики

© Copyright 1994

Фильтр-ловушка из чугуна Fig 33

Описание

Фильтры ловушки Y образные Fig 33 для DN 15 до 50
стандартные сетки из нержавеющей стали с перфорацией диаметром 0 8 мм
Фильтры ловушки Y образные Fig 33 для DN 100 до 200
Стандартные сетки из нержавеющей стали с отверстиями диаметром 1 6 мм

Дополнительное оборудование

Кожухи фильтров ловушек

Сталь нержавеющая	Диаметр	1 6 мм (DN 15 до DN 50) 3 мм (DN 15 до DN 200)
	Количество отверстий	40 100 200
Латунь	Диаметр	0 8 мм (DN 15 до DN 50) 1 6 мм (DN 100 до DN 200) 3 мм (DN 15 до DN 200)
	Количество отверстий	100

Ограничение применения

Корпус соответствует нормали PN 16
Максимальная расчетная температура 300 C
Давление холодного гидравлического испытания 24 бар

Диапазон рабочих параметров

Нерабочая область для данного изделия
A — A Фланц соед BS 4504 PN 16
B — B Фланц соед AS 2129 табл F
C — C Фланц соед ANSI категории 125
(включая DN15 и 20 ANSI категории 150)

Размеры и соединения

DN 15 20 25 32 40 50 65 80 100 125 150 и 200
Станд фланц соед BS 4504 и DIN PN 16 и 10 AS2129 табл F ANSI 150 (DN 15 и 20) ANSI 125 (DN 25 до 200)

Материалы

№	Деталь	Материал	
1	Корпус	Чугун	DIN 1691 GG 20
2	Крышка	DN15 50 SG чугун DN65 200 чугун	DIN 1693 GGG 40 DIN 1691 GG 20
3	Прокладка крышки	Графит листовой армированный	
4	Кожух фильтра ловушки	Сталь нерж	ASTM A240 316L
5	Шпильки крышки Гайки крышки	Сталь Сталь	BS 4439 Gr 8 8 BS 3692 Gr 8

DN 15 до 50

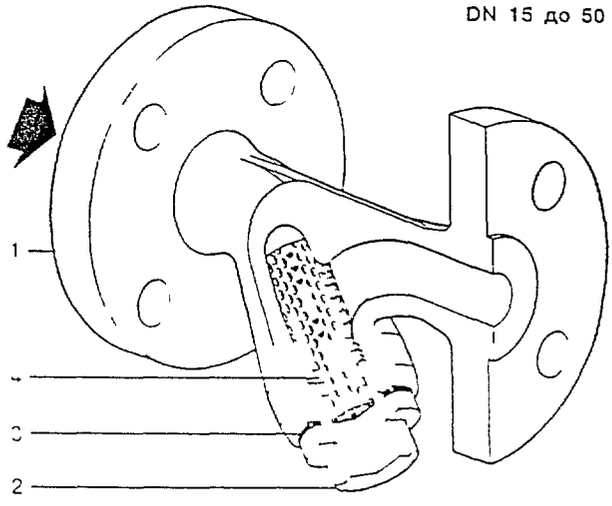

DN 65 до 200

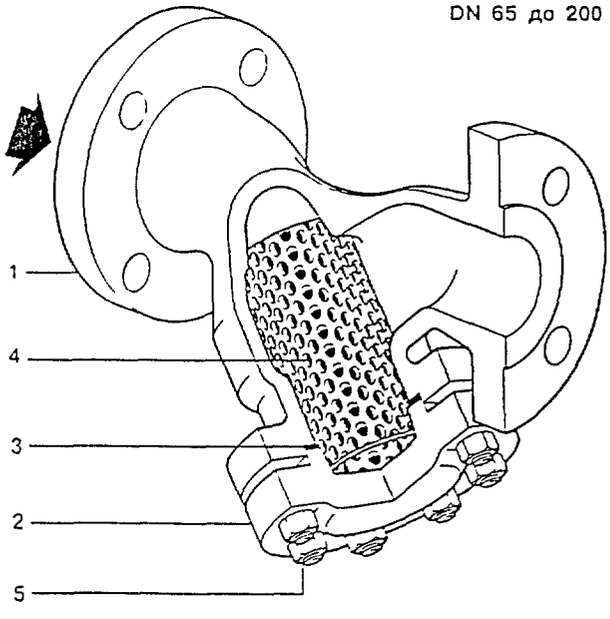

Значения коэффициента kv

DN	15	20	25	32	40	50	65	80	100	125	150	200
>100 отверстий	5	8	13	22	29	46	72	103	155	237	340	588
200 отверстий	4	6	10	17	23	37	58	83	124	186	268	464

Для перевода C_v (Англ) = k_v x 0 97 C_v (США) = k_v x 1 17

Обозначение в заказе

Фильтр ловушка Спаиракс Сарко Fig 33 DN25 с фланцевыми соединениями BS 4504 PN16 с кожухом из нержавеющей стали и диаметром отверстии 0 8 мм

Использование данного изделия может быть ограничено если местными правилами эксплуатации установлены параметры ниже указанных
С целью совершенствования данного изделия мы оставляем за собой право изменять его технические характеристики

© Copyright 1995

ТЕХСНАБ

23 12 97

-А, ДВЕРИ алюминиевые фирмы CORAL под заказ от 100 до 400 у.е. за кв.м

Фирма реализует счетчики электрической энергии воды

чётные пускатели автоматические выключатели в следующем ассортименте

Наименование и тип	Цена без НДС	НДС	Цена в грн
Счетчики			
36 3А	108,25	21 36	129 90
3001 3-20А	104 25	20 85	125 10
3 5 0 W 3А 230В	83 30	16 70	100 00
35 20-30А	116 75	23 36	140 10
3 3 00 75А	156 30	31 30	188 00
3 3 30 00А	133 30	31 36	166 20
3002 380/220В	25 30	25 30	150 30
3003 100В	30 30	29 30	156 00
ики однофазные ХОТ	3 00	6 00	36 00
3 W 10-40А	33 30	8 70	40 20
ы выключатели 1-полюсные			
3А	3 75	0 75	4 50
3-полюсные			
0 3 0 8 25А	17 30	3 30	20 60
3 3 10 6 25А опт от 100 шт	16 25	3,25	19 50
40 40А	13 30	2 70	16 00
3-40А	3 70	0 30	4 00
00А	33	11 00	66 00
ли на DIN-рейку			
ные R 3 10-30А	3 30	0	3 30
ные BA63 3 10-63А	7 30	0 30	7 60
	3 75	0 75	4 50
ки PKE 2222	2 50	0 50	3 00
PKE 2222	6 3	1 30	7 30
PKE 2223	10	2 00	12 00
KV-32-30Г	73 30	14 70	88 00
KV-63-30Г	83 30	16 70	100 00
ки PKE-30Г-40	3 00	1 00	4 00
ли магнитные			
3 330В	29 70	5 30	35 00
0	27 30	5 40	32,40
30	75 30	15 00	90 00
220	80 70	16 30	98 00
3 02	125 30	25 00	150 00
3212	176 30	35 00	211 30
3212	240	48 00	288 00
	5 30	1 30	6 60
32	17 00	3 40	20 40
ловые РТЛ 1000 1014	7 50	1 50	9 00
ловые РТЛ 2053	15 00	3 00	18 00
ставка контактная ПКЛ 2204	2 75	0 55	3 30
ники ВРС32 400А	46 30	9 20	55 20
ники ЯРП 100А	72 5	14 50	87 00
ники ЯРП 250А	100	20 00	120 00
ранители ПН 2 250А	12 50	2 50	15 00
ы электрические ЭКС-3	2 9 30	4,20	2,2 30
ы электрические ЭКС-12	223 30	61 90	3 9 30
ы электрические ЭКС 24	300 00	100 00	300 00
ограничители тока			
6 200/8 400/8 600/8	11 75	2 35	14 10
ф понижающие ОСМ 1-0 25 220/12	33 30	6 70	40 20
ф понижающие ОСМ 1-0,25 220/36	33 30	6 70	40 20

Наименование и тип	Цена без НДС	НДС	Цена в грн
Ящики управления [illegible] 0,25 220/ 2	31 75	13 36	110 10
Ящики управления [illegible] 0,25 220 36	91 75	13 36	110 10
Щитки осветительные			
[illegible] 1X[illegible] для автоматов ВА 35 1	42 30	8 30	51 30
[illegible] групп ЩА 501 с авт ВА 103	33 30	1 [illegible]	[illegible]
Щитки ЩРОУ СГИ	24,25	4 35	29 10
Щитки ЩРОУ-31	3 30	7 30	45 00
ЩК 2 00	50 30	10 30	60 00
Щитки для однофаз сч NRL [illegible]	72 30	14 30	87 00
Щитки для 3-ф сч NRL 120 NRL 132	89,25	17 86	107 10
Щитки обжимные NRL 42, R 242	125 30	25 30	150 30
Электроводонагреватели NER 300	241 75	48 36	290 10
Электроводонагреватели NER 500	291 75	58,35	350 10
Электроводонагреватели NER 300р	3,5 30	65 30	390 30
Электроводонагреват NER 100р	364 75	73 36	440 10
Счетчики холодной воды			
ЛВ 75 15 20мм	43 25	8 65	51 90
VM 3-3 V/1 20 25 мм	60 30	12 30	72,30
VM V/1 25-32мм	[illegible]	[illegible]	110 0
ВСХМ 32	190	38	228
ВСХ 1-40	2 5	22,30	35 10
ВСХМ-50	[illegible] 0 30	32 30	372,30
WS 50 40	5 5 30	125 30	7 [illegible] 20
СТВ-65	250 30	50 30	300 30
СТВ-80	2 0 30	54 30	324 30
WS 80/40	665 30	133 30	799 30
СТВ-100	360 30	72 30	432,30
WS 100/40	9 5 30	185 30	999,30
СТВ 150	460 30	92 30	552 00
Горячей воды			
ЛВ 75 15 20мм	43 25	8 65	51,30
ВСХМГ 25	140 30	28 30	168 00
ВСХМГ-32	2 0 30	4 [illegible] 30	252 30
ВСХМГ-40	190 30	38 30	228 00
ВСХМГ-50	330 30	66 30	396 00
СТВГ-65	303 30	60 70	364 20
СТВГ-80	280 30	56 30	336 30
WS 80/100	803 25	161 35	963,30
СТВГ 100	333 30	66 70	400 20
WS 100/100	1025 30	205 30	1230 30
СТВГ 150	435 30	86 70	520 20
Обратный клапан Ду 25	9 75	1 36	11 [illegible]
Счетчики тепла Supercal 32 мм	1500 30	300 30	1800 30
Газовые счетчики GALLUS 2000 G4	104 30	20 30	124,30
Газовые счетчики РГ 20	250 30	50 30	300 30
Газовые счетчики РГ-40	7 [illegible] 75	143 5	334 30
Сбеги польские	3 75 4 25	1 5 1 35	6 30-9 30
Люстры хрустальные 6-ламповые	125 30	25 30	150 30

Предоставляются скидки на оптовые партии товаров

л 295-32-47	252011, г Киев
ф/с 295-07-70	ул Лесхова, 9 к 606

Тихова

BEST AVAILABLE COPY

ТЕХНИЧЕСКИЕ ХАРАКТЕРИСТИКИ

	МНЛ 2002 QR1 и Гц (*/Wu)	2РВМ	МНЛ 72 A/1 QR1 uH (*/Wu)
1 Габаритные размеры, мм	72x72x62	180x175x125	72x72x52
2 Вес, г	185	1500	165
3 Питание	200-240 В, 45-65 Гц	200-240 В 50 Гц	200-240 В 45-60 Гц
4 Потребляемая мощность Вт	2	0,4	2
5 Коммутируемый ток, А			
- на активную нагрузку	10 А/250 В	15 А/220 В	16 А/250 В
- на индуктивную нагрузку	2 А/250 В, Cos φ 0,6	1,5 А/220 В пост тока	8 А/250 В, Cos φ 0,6
6 Количество каналов	2	2	1
7 Точность хода, секунд	± 2,5 при 20 °С	± 1,25 при 20 °С	± 2,5 при 20 °С
8 Резерв хода, ч	70	24	70
9 Рабочие условия, °С	от -20 до +55	от +5 до +50	от -20 до +50
Характеристики программы			
- внутренний диск			
цена деления, мин	15	20	
коммутируемый интервал	45 мин	10 мин	-
- наружный диск			
цена деления, мин	15 */60	15	15 */120
коммутируемый интервал	30 мин (*/180 мин)	30 мин	15 мин (*/120 мин)

(*/ при недельной программе по отдельному заказу для МНЛ 2002 и МНЛ 72)

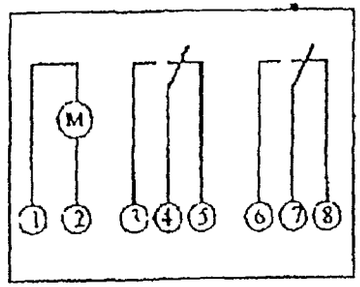

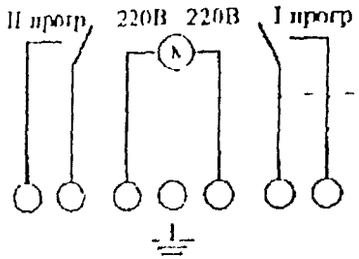

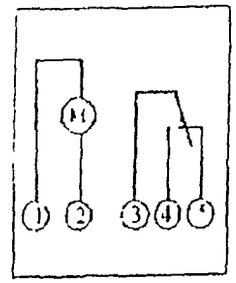

BEST AVAILABLE COPY

ABB Frequency Converters

Транзисторные преобразователи для регулирования скорости вращения асинхронных электродвигателей насосов и вентиляторов

Трехфазное напряжение 380В, 400В, 415В

Тип преобразователя	IP 22		IP 54		Высота мм	Ширина мм	Глубина мм	Вес кг	Цена, USD IP 22 без EMC фильтра	Цена, USD IP 22 с EMC фильтром	Цена USD IP 54 с EMC фильтром
	Номин ток A	Мощн двигат кВт	Номин ток A	Мощн двигат кВт							
ACF601-0016-3	32	15	-	-	526	304	310	25	2 291	2 458	-
ACF601-0020-3	41	18,5	32	15					2 887	3 105	3 493
ACF601-0025-3	47	22	41	18,5					3 301	3 545	3 680
ACF601-0030-3	62	30	47	22	715	304	357	35	3 752	4 037	4 237
ACF601-0040-3	76	37	62	30					4 451	4 787	4 987
ACF601-0050-3	89	45	76	37					5 681	6 107	6 307
ACF601-0060-3	112	55	89	45					6 354	6 831	7 161
ACF601-0070-3	124	75(60)	112	55	715	304	429	50	7 245	8 047	8 377
ACF601-0100-3	178	90	-	-					9 666	10 350	-
ACF601-0120-3	200	110(100)	-	-	860	480	428	88	11 192	11 989	-
ACF607-0100-3	178	90	147	75					11 463	13 973	14 603
ACF607-0120-3	200	110(100)	178	90	860	480	428	88	13 119	16 819	17 509
ACF607-0140-3	260	132	200	110					16 675	21 476	22 396
ACF601-0170-3	316	160	260	132					19 093	24 581	25 751
ACF607-0210-3	395	200	316	160	2065	1030	644	370	21 258	27 169	28 509
ACF601-0260-3	480	250	395	200					23 771	30 274	31 784
ACF607-0320-3	520	315(270)	480	250	2065	1030	614	400	27 859	35 794	37 504

EMC фильтр - устройство, уменьшающее влияние бросков тока от ACS 600 в питающей сети
Степень защиты - IP 22 и IP 54
В цену привода не входит НДС, таможенный сбор, страховка и транспортные расходы

АВВ Украина тел (044) 296-46-43
НПФ 'Элмаш' тел (044) 441-26-66

BEST AVAILABLE COPY

МКЭ ЭНЕРГОСБЕРЕЖЕНІЕ

Международный консорциум

Украина 310022 Харьков а/я 4515 Тел (0572) 44-00-10 факс (0572) 44-01-43
E-mail harsky@uepa.kharkov.ua

№ [illegible]
от 18.11.97 г

г-н Быков Ю.К.

факс 27-76-96

Уважаемый Юрий Константинович!

На Ваш запрос сообщаем цены

РЭН 11 - 11 Вт 2200 у.е.

РЭН 15 - 15 Вт - 2500 у.е.

РЭН 22 - 22 кВт - 3800 у.е.

В НДС входит обследование места установки, шеф монтаж, наладка и транспортировка. Цена дана для исполнения IP21. Гарантийное обслуживание - 1 год. Работа электропривода с сигналом обратной связи 4-20 мА в замкнутом контуре регулирования обеспечивается.

Директор /Л.П. Вотокита/

94

Сервисное и гарантийное обслуживание

Доставка и наладка преобразователей осуществляется на всей территории страны. Стоимость этих услуг зависит от размера заказа и местонахождения заказчика.

Поставка оборудования сопровождается годичным гарантийным обслуживанием, также сервисным обслуживанием в дальнейшем, производимым сервисным центром Корпорации (в Харькове/г.Харьков)

Поставка оборудования "под ключ" сопровождается как поставкой дополнительного оборудования (датчиками технологического параметра, шкафами управления, кабелями, разъемами), так и необходимым обучением персонала и выдачей необходимой литературы.

Дополнительные возможности.

При контракте на сумму более $40 000 оплата может быть произведена встречной продукцией по договорной цене. В этом случае срок поставки начинается с момента получения бартерной продукции.

Специалисты Корпорации осуществляют расчеты экономической целесообразности применения оборудования, подбор оптимальных технических решений и отслеживают базовые данные по всем отраслям управления разнообразными технологическими процессами по заданию заказчиков в различных отраслях промышленности и городского хозяйства.

В случае необходимости поставок приводов со специальными характеристиками (в рамках ТУ) мы проводим необходимые доработки и исследования по заданию заказчиков.

D. MEASUREMENTS AND DATA COLLECTED

D.1. Statistical data of 1995 through 1997

Balance of enterprise
as of January 1, 1996

			Codes
		Form No 1	1801002
		Date (year, month, date)	01
Enterprise	Kupyansk milk canning plant		00418142
Territory	Ukraine		
Ownership form	collective		
State authority	none		
Type of activity	industry		
Unit of measurement	mln Ukr Krb	Check sum	

Address 26, Lomonosova str, Kupyansk

98

ASSETS	Line code	Beginning of year	End of reporting period
1	2	3	4
I FIXED ASSETS AND OTHER NON-CURRENT ASSETS			
Fixed assets			
residual value	010	148829	212475
depreciation (02)	011	445160	431658
original cost (01)	012	593989	664132
Work-in-process capital investments (33, 35, 61)	030	39451	354366
Equipment (07)	035	3179	2466
Long-term financial investments (58)	040		200
Settlements with shareholders (75)	050		6328
Total for Section 1	**070**	**191459**	**575835**
II INVENTORIES AND COSTS			
Production stock (05-08, 10)	080	96344	225411
Low - value and fast - depreciating items			
residual value	100	296	1218
Expenses of future periods (31)	120	1399	1263
Finished goods (40)	130	1972	48506
Goods			
buying cost (41)	140	1189	2565
Total for Section II	**150**	**101200**	**278964**
III CASH, SETTLEMENTS AND OTHER CURRENT ASSETS			
Goods shipped			
payment is not due (45)	160	20982	156049
Settlements with debtors			
for goods, works and services payment is not due (62,76)	170		
with budget (68)	200		
with employees under other transactions (73)	210	72	6295
with other debtors	240	10318	158101
Cash			
cash (50)	260	5	141
settlement account (51)	270	103	1
currency account (52)	280	22	6256
other monetary items (54, 55, 56)	290		559
Borrowed funds (82)	300	4000	267000
Other current assets	310		206
Total for section III	**320**	**35502**	**594608**
BALANCE (sum of lines 070, 150, 320, 330 and 340)	**350**	**328161**	**1499407**

LIABILITIES	Line code	Beginning of year	End of reporting period
1	2	3	4
1 SOURCES OF OWN AND SIMILAR FUNDS			
Statutory fund (capital) (85)	400	27499	328835
Reserve fund (88)	410	6634	11886
Capital financing (93, 94)	420	42630	271000
Special-purpose funds and target financing (87, 88, 89)	430	203322	402935
Settlements with shareholders (75)	450		970
Profit			
used in the accounting year (81)	481		721793
of accounting year (80)	482		721793
Total for Section I	**490**	**280085**	**1015626**
II LONG-TERM LIABILITIES			
Bank loans (92)	500		267000
Borrowed funds (95)	510	4000	
Total for Section II	**530**	**4000**	**267000**
III SETTLEMENTS AND OTHER LIABILITIES			
Short-term bank loans	600	4600	
Settlements with creditors			
for goods, works and services payment is not due (60, 76)	630	23237	43248
budget (68)	670	2067	32407
wage payments (70)	700	1867	5544
with other creditors (71,76)	720	12233	75668
Total for section III	**750**	**44076**	**166781**
BALANCE (sum of lines 495, 530, 750)	**760**	**3281**	**1449407**

Balance of enterprise
as of October 1, 1997

			Codes
		Form No 1	1801002
		Date (year, month, date)	01
Enterprise	Kupyansk milk canning plant		00418142
Territory	Ukraine		
Ownership form	collective		
State authority	none		
Type of activity	industry		
Unit of measurement	mln Ukr Krb	Check sum	

Address 26, Lomonosova str, Kupyansk

ASSETS	Line code	Beginning of year	End of reporting period
1	2	3	4
I FIXED ASSETS AND OTHER NON-CURRENT ASSETS			
Fixed assets			
residual value	010	12288814	13356509
depreciation (02)	011	11909407	12284820
original cost (01)	012	24198221	25641329
Work-in-process capital investments (33, 35, 61)	030	2090200	2197810
Equipment (07)	035	83643	136295
Long-term financial investments (58)	040	2000	2000
Settlements with shareholders (75)	050	3330	3330
Total for Section I	**070**	**14467987**	**15695944**
II INVENTORIES AND COSTS			
Production stock (05-08, 10)	080	2757904	3680710
Low - value and fast - depreciating items			
residual value	100	4962	94840
Expenses of future periods (31)	120		8245
Finished goods (40)	130	522561	438764
Goods			
buying cost (41)	140	12054	12520
Total for Section II	**150**	**3297481**	**4235079**
III CASH, SETTLEMENTS AND OTHER CURRENT ASSETS			
Goods shipped			
payment is not due (45)	160		
Settlements with debtors			
for goods, works and services payment is not due (62, 76)	170	815320	546572
with budget (68)	200	975090	16418
with employees under other transactions (73)	210	80398	124522
with other debtors (63, 70, 71, 72, 73, 76, 84)	240	3000046	1792465
Cash			
cash (50)	260	2687	792
settlement account (51)	270	249963	2589
currency account (52)	280	3230	159029
other monetary items (54, 55, 56)	290	68625	191597
Borrowed funds (82)	300	2366250	1634500
Other current assets	310	7157	2712
Total for section III	**320**	**7568766**	**4468196**
BALANCE (sum of lines 070, 150, 320, 330 and 340)	**330**	**25334234**	**24399219**

LIABILITIES	Line code	Beginning of year	End of reporting period
1	2	3	4
1 SOURCES OF OWN AND SIMILAR FUNDS			
Statutory fund (capital) (85)	400	3288348	3288348
Additional capital (88)	405	11183014	13247893
Reserve fund (88)	410	392228	392228
Capital financing (93, 94)	420	2710000	2710000
Special-purpose funds and target financing (87, 88, 89)	430	1240954	387875
Settlements with shareholders (75)	450	5096	8819
Profit			
used in the accounting year (81)	481		4057256
of accounting year (80)	482		3398639
Total for Section I	**495**	**18819640**	**19632693**
II LONG-TERM LIABILITIES			
Bank loans (92)	500	2366250	1634500
Borrowed funds (95)	510		
Total for Section II	**530**	**2366250**	**1634500**
III SETTLEMENTS AND OTHER LIABILITIES			
Bank loans (90)	600	400000	398000
Settlements with creditors			
for goods, works and services payment is not due (60, 76)	630	1529676	1326984
budget (68)	670	437358	151898
wage payments (70)	700	268202	174540
with other creditors (71,76)	720	1087843	827592
Total for section III	**750**	**4148344**	**3132026**
BALANCE (sum of lines 495, 530, 750)	**760**	**25334234**	**24599219**

Balance of enterprise
as of January 1, 1997

			Codes
		Form No 1	1801002
		Date (year, month, date)	01
Enterprise	Kupyansk milk canning plant		00418142
Territory	Ukraine		
Ownership form	collective		
State authority	none		
Type of activity	industry		
Unit of measurement	mln Ukr Krb	Check sum	

Address 26, Lomonosova str, Kupyansk

104

ASSETS	Line code	Beginning of year	End of reporting period
1	2	3	4
I FIXED ASSETS AND OTHER NON-CURRENT ASSETS			
Fixed assets			
residual value	010	2124746	12288814
depreciation (02)	011	4516577	11909407
original cost (01)	012	6641323	24198221
Work-in-process capital investments (33, 35, 61)	030	3543651	2092200
Equipment (07)	035	24665	83643
Long term financial investments (58)	040	2000	2000
Settlements with shareholders (75)	050	63285	3330
Total for Section 1	**070**	**5758347**	**14467987**
II INVENTORIES AND COSTS			
Production stock (05-08, 10)	080	2254115	2757904
Low - value and fast - depreciating items			
residual value	100	12186	4962
Expenses of future periods (31)	120	12633	
Finished goods (40)	130	485062	322561
Goods			
buying cost (41)	140	25647	12054
Total for Section II	**150**	**2789643**	**3297481**
III CASH, SETTLEMENTS AND OTHER CURRENT ASSETS			
Goods shipped			
payment is not due (45)	160		
Settlements with debtors			
for goods, works and services payment is not due (62, 76)	170	1560494	815320
with budget (68)	200		975090
with employees under other transactions (73)	210	6295	80398
with other debtors	240	1581016	3000046
Cash			
cash (50)	260	1406	2687
settlement account (51)	270	-	249963
currency account (52)	280	62558	3230
other monetary items (54, 55, 56)	290	5590	68625
Borrowed funds (82)	300	2670000	2366250
Other current assets	310	2064	7157
Total for section III	**320**	**5946078**	**7568766**
BALANCE (sum of lines 070, 150, 320, 330 and 340)	**350**	**14494068**	**25334234**

105

LIABILITIES	Line code	Beginning of year	End of reporting period
1	2	3	4
1 SOURCES OF OWN AND SIMILAR FUNDS			
Statutory fund (capital) (85)	400	3288348	3288348
Additional capital (88)	405		11183014
Reserve fund (88)	410	118855	392228
Capital financing (93, 94)	420	2710000	2710000
Special-purpose funds and target financing (87, 88, 89)	430	4029357	1240954
Settlements with shareholders (75)	450	9702	5096
Profit			
used in the accounting year (81)	481		5467450
of accounting year (80)	482		5467450
Total for Section I	**490**	**10156262**	**18819640**
II LONG-TERM LIABILITIES			
Bank loans (92)	500	2670000	2366250
Borrowed funds (95)	510		
Total for Section II	**530**	**2670000**	**2366250**
III SETTLEMENTS AND OTHER LIABILITIES			
Short-term bank loans (90)	600	-	400000
Settlements with creditors			
for goods, works and services payment is not due (60, 76)	630	432485	1529676
budget (68)	670	324072	437358
wage payments (70)	700	55443	268202
with other creditors (71,76)	720	756664	1087843
Total for section III	**750**	**1667806**	**4148344**
BALANCE (sum of lines 495, 530, 750)	**760**	**14494068**	**25334234**

Report on the financial results in 1995

			Codes
		Form No 2	1801002
		Date (year, month, date)	01
Enterprise	Kupyansk milk canning plant		00418142
Territory	Ukraine		
Ownership form	collective		
State authority	none		
Type of activity	industry		
Unit of measurement	thousand Hr	Check sum	

I Financial results

Indicator	Line code	Gains	Losses
1	2	3	4
Revenue (gross income)	010	3080088	
VAT	015		337812
Production costs	040		2023244
Results from sales of primary products	050	719032	
Results from sales of other products	060	14548	
Revenues and expenses from other operations	070		11787
Total gains and losses	080	733580	11787
Pre-tax income or loss	090	721793	
Actual volume of production	100	2559019	

Report on the financial results in 1996

			Codes
		Form No 2	1801002
		Date (year, month, date)	01
Enterprise	Kupyansk milk canning plant		00418142
Territory	Ukraine		
Ownership form	collective		
State authority	none		
Type of activity	industry		
Unit of measurement	thousand Hr	Check sum	

1 Financial results

Indicator	Line code	Gains	Losses
1	2	3	4
Revenue (gross income)	010	44636403	
VAT	015		5307517
Production costs	040		34128402
Results from sales of primary products	050	5200484	
Results from sales of other products	060	255178	
Revenues and expenses from other operations	070	25651	13863
Total gains and losses	080	5481313	13863
Pre-tax income or loss	090	5467450	
Actual volume of production	100	33934000	

Report on the financial results in 9 months of 1997

			Codes
		Form No 2	1801002
		Date (year, month, date)	01
Enterprise	Kupyansk milk canning plant		00418142
Territory	Ukraine		
Ownership form	collective		
State authority	none		
Type of activity	industry		
Unit of measurement	thousand Hr	Check sum	

111

1 Financial results

Indicator	Line code	Gains	Losses
Revenue (gross income)	010	21275538	
VAT	015		2318006
Production costs	040		15876793
Results from sales of primary products	050	3080739	
Results from sales of other products	060	115597	
Revenues and expenses of other operations	070	271196	68893
Total gains and losses	080	3467532	68893
Pre-tax income or loss	090	3398639	
Actual volume of production	100	20244000	

Form No 11 mtp

The reporting organization	Kupyansk milk canning plant
Ownership form	joint-stock company
Address	26, Lomonosova str , Kupyansk, Ukraine

REPORT ON THE FUEL, THERMAL ENERGY AND ELECTRIC POWER USE FOR 1995

1 Fuel (as tce - 7700 Ccal/kg)

Types of products and work	Unit	Product code by ZKP	Line number	Production output/ work completed	Actual use per unit of production		Use per overall production output for the reporting period
					for the same period of the previous year	for the reporting period	Actual
Thermal energy	Gcal			633	180 3	180 3	114
Other industrial use of boiler fuel			9010				70
Total industrial use of boiler fuel			9100				184
Domestic use			9200				
Total use of boiler fuel (lines 9100+9150+9200)			9300				184

2 Thermal energy (steam and hot water)

Types of products and work	Unit	Product code by ZKP	Line number	Production output/ work completed	Actual use per unit of production		Use per overall production output for the reporting period
					for the same period of the previous year	for the reporting period	Actual
Butter	tonnes	9221010000		1218	3200	3200	3898
Canned milk	thou cans	922200000		27800	807	807	22435
Whole milk products	tonnes	322000000		6810	106	106	722
Other industrial use			9010				13621
Total industrial use			9100				40676
Domestic use			9200				4919
Total use (lines 9100+9200)			9300				45595
Sources of own supply	Gcal		9710				
from boiler units			9720	633			
from outside suppliers of the same ministry			9810	47711			

3 Electric power

Types of products and work	Unit	Product code by ZKP	Line number	Production output/ work completed	Actual use per unit of production		Use per overall production output for the reporting period
					for the same period of the previous year	for the reporting period	Actual
Butter	tonnes	9221010000		1218	83	83	101
Canned milk	thou cans			27800	27 3	27 3	759
Whole milk products	tonnes			6810	13	13	89
Refrigeration				4203	757	757	3181
Other industrial use			9010				1386
Total industrial use			9100				5516
Domestic use			9200				80
Overall use (lines 9100+9200)			9300				5596

Form No 11 mtp

The reporting organization	Kupyansk milk canning plant
Ownership form	joint-stock company
Address	26, Lomonosova str , Kupyansk, Ukraine

REPORT ON THE FUEL, THERMAL ENERGY AND ELECTRIC POWER USE FOR 1996

1 Fuel (as tce - 7700 Ccal/kg)

Types of products and work	Unit	Product code by ZKP	Line number	Production output/ work completed	Actual use per unit of production		Use per overall production output for the reporting period
					for the same period of the previous year	for the reporting period	Actual
Thermal energy	Gcal	01200880	0030	1042	180 3	180 3	188
Other industrial use of boiler fuel			9010				10
Total industrial use of boiler fuel			9100				198
Domestic use			9200				
Total use of boiler fuel (lines 9100+9150+9200)			9300				198

2 Thermal energy (steam and hot water)

Types of products and work	Unit	Product code by ZKP	Line number	Production output/ work completed	Actual use per unit of production		Use per overall production output for the reporting period
					for the same period of the previous year	for the reporti ng period	Actual
Butter	tonnes	9221010000	2490	1087	3200	3200	3478
Canned milk	thou cans	922700000	2560	29890	807	807	24121
Whole milk products	tonnes	922000000	2510	5926	106	106	628
Mountain cheese	tonnes	9225000000	2500	17	1560	1560	27
Other industrial use			9010				4428
Total industrial use			9100				32682
Domestic use			9200				7442
Total use (lines 9100+9200)			9300				40124
Sources of own supply	Gcal		9710				
from boiler units			9720	1042			
from outside suppliers of the same ministry			9810	42392			

115

3 Electric power

Types of products and work	Unit	Product code by ZKP	Line number	Production output/ work completed	Actual use per unit of production		Use per overall production output for the reporting period
					for the same period of the previous year	for the reporting period	Actual
Butter	tonnes	9221010000	2490	1087	83	83	90
Canned milk	thou cans	922700000	2560	29890	27 3	27 3	816
Whole milk products	tonnes	922000000	2510	5926	13	13	77
Refrigeration	tonnes	9225000000	2500	17	708	708	12
Other industrial use			9010				339
Total industrial use			9100				5686
Domestic use			9200				80
Overall use (lines 9100+9200)			9300				5766

Form No 11 mtp

The reporting organization: Kupyansk milk canning plant

Ownership form: joint-stock company

Address: 26, Lomonosova str , Kupyansk, Ukraine

REPORT ON THE FUEL, THERMAL ENERGY AND ELECTRIC POWER USE FOR 9 MONTHS OF 1997

1 Fuel (as tce - 7700 Ccal/kg)

Types of products and work	Unit	Product code by ZKP	Line number	Production output/ work completed	Actual use per unit of production		Use per overall production output for the reporting period
					for the same period of the previous year	for the reporting period	Actual
Thermal energy	Gcal	01200880	0030	1484	180 3	180 3	268
Other industrial use of boiler fuel			9010				8
Total industrial use of boiler fuel			9100				276
Domestic use			9200				
Total use of boiler fuel (lines 9100+9150+9200)			9300				276

2 Thermal energy (steam and hot water)

Types of products and work	Unit	Product code by ZKP	Line number	Production output/ work completed	Actual use per unit of production		Use per overall production output for the reporting period
					for the same period of the previous year	for the reporting period	Actual
Butter	tonnes	9221010000	2490	1520	3200	3200	4864
Canned milk	thou cans	922700000	2560	30672	807	629 3	19302
Whole milk products	tonnes	922000000	2510	4003	106	106	424
Mountain cheese	tonnes	9225000000	2500	9	1560	1560	14
Other industrial use			9010				3949
Total industrial use			9100				28553
Domestic use			9200				3800
Total use (lines 9100+9200)			9300				32353
Sources of own supply	Gcal		9710				
from boiler units			9720	1484			
from outside suppliers of the same ministry			9810	32509			

117

3 Electric power

Types of products and work	Unit	Product code by ZKP	Line number	Production output/ work completed	Actual use per unit of production		Use per overall production output for the reporting period
					for the same period of the previous year	for the reporting period	Actual
Butter	tonnes	9221010000	2490	1520	83	83	126
Canned milk	thou cans	922700000	2560	30672	27 3	27 3	837
Whole milk products	tonnes	922000000	2510	4003	13	13	52
Mountain cheese	tonnes	9225000000	2500	9	708	708	6
Refrigeration	Gcal	9980000152	2530	4980	757	757	3770
Other industrial use			9010				164
Total industrial use			9100				4955
Domestic use			9200				55
Overall use (lines 9100+9200)			9300				5010

D.2 Totalized energy use indicators according to the plant data

Electric power use in 1996

	Supply	Use, kWh									
Period	**KWh**	**Canned milk**	**Butter**	**WMP**	**Powdered milk**	**Cheese**	**Stores**	**Sales outside**	**Domestic use**	**Cooling**	**Milk glue**
January	299 715	27 391	52 766	214 804		1704	1640	10 320			
February	270 334	36 077	68,742	153 097		1704	1115	13100			
March	445 117	114 111	115 776	173,968	13,472	852	1149	10 100			
Total	1 015 166	204 579	237 284	541 869	13 472	4260	3904	33,520			
April	476 773	87 247	141 224	161 020	90 936	1704	1201	9280			
May	615 757	174 604	175 473	166 6664	106,092	1704	1300	7102			
June	672 497	236 992	221 375	179 002	57,114	708	1377	9160			
2 quarter	**1,765,027**	**498,843**	**538,072**	**506,686**	**254,142**	**4116**	**3878**	**25,560**			
1 half year	**2,780,193**	**703,422**	**775,356**	**1,048,555**	**267,614**	**8376**	**7782**	**59,080**			
July	594 048	117 608	15 023	5356	84 132	708	1644	6520	1000	386 629	708
August	726 248	78 542	19 422	4199	82 080		1262	7800	1000	535 683	3540
September	530 464	105 159	9711	6201	18 313	708	1181	7720	3000	405 620	708
3 quarter	**1 850,760**	**301,309**	**44,156**	**15,756**	**184,525**	**1416**	**4087**	**22,040**	**5000**	**1,328,832**	**4956**
9 months	**4,630,953**	**1,004,731**	**819,512**	**1,064,311**	**452,139**	**9792**	**11,869**	**81,120**	**5000**	**1,328,832**	**4956**
October	460 718	74 774	4136	6929	0	1416	1022	10 000	7000	387 531	
November	329 830	37 619	1328	8814	0	708	2698	8320	7000	270 563	

Electric power use by types of products in 1997

	Supply		Use, kWh								
Period	**kWh**	**Hr**	**Butter**	**Canned milk**	**WMP**	**Powder milk**	**Cheese**	**Cooling**	**Domes-tic use**	**Sales outside**	**Stores**
January	299 906	24 937	2988	41 305	12			235 915	10,000	12 600	2144
February	277 795	23 530	3403	40 650	2002			215 091	10 000	11 900	533
March	432 737	33 146	4814	68 250	1690			346 058	10 000	11 300	445
1 quarter	**1,010,438**	**81,613**	**11,205**	**150,205**	**4004**			**797,064**	**30,000**	**35,800**	**3122**
April	460 929	35 704	5727	60 060	2678		708	396 380	10 000	11 100	672
May	492 845	38 164	10 043	79 388	8047		708	390 917	5000	7600	1260
June	592 334	47 384	20 501	147 120	7384	30 780	708	387 698	5000	7400	1543
2 quarter	**1,546,108**	**121,252**	**36,271**	**286,568**	**18,109**	**30,780**	**2124**	**1,175,445**	**20,000**	**26,100**	**3475**
1 half year	**2,556,546**	**202,856**	**47,476**	**436,773**	**22,113**	**30,780**	**2124**	**1,972,509**	**50,000**	**61,900**	**6697**
July	739 581	59 070	24 236	157 603	9113	37 278	1416	510 097	2000	8400	1808
August	871 974	66 481	27 390	147 338	8970	40,698	1416	655 506	2000	8400	1566
September	813 565	60 236	26 975	95 659	11 505	50,274	2124	628 629	1000	8400	1194
3 quarter	**2,425,120**	**185,787**	**78,601**	**400,600**	**29,588**	**128,250**	**4956**	**1,794,232**	**5000**	**25,200**	**4586**
9 months	**4,981,666**	**388,652**	**126,077**	**837,737**	**51,701**	**159,030**	**7080**	**3,766,741**	**55,000**	**87,100**	**11,165**

Thermal energy use by periods and types of products in 1996, Gcal

	Supply	Use						
Period	**Sugar plant**	**Canned milk**	**Butter**	**Powdered milk**	**Milk glue**	**WMP**	**Cheese**	**Sales outside**
January	3565	2121	338	0	0	790	3	400
February	3391	2443	357	0	0	264	3	400
March	3951	2443	210	79	0	241	2	300
1 quarter	**10,907**	**7781**	**905**	**79**	**0**	**1295**	**8**	**1100**
Production output		**3561**	**138**	**8**		**1745**	**4**	
Use per unit of production		**2 18**	**6 56**	**9 8**	**0**	**0 742**	**2**	
April	3517	2372	305	300	0	223	3	383
May	3128	2085	200	600	0	223	3	100
June	4846	2900	287	1374	0	174	1	200
2 quarter	**11,491**	**7357**	**792**	**2274**	**0**	**627**	**7**	**683**
1 half-year	**22,398**	**15,138**	**1697**	**2353**	**0**	**1922**	**15**	**1783**
Production output		**9372**	**340**	**284**	**0**	**1422**	**5**	
Use per unit of production		**0 785**	**2 33**	**8,00**	**0**	**0 44**	**1 4**	
July	3252	1554	400	1099	0	43	1	200
August	5444	2282	740	2180	8	34	0	200
September	3953	3015	342	502	1	50	1	200
3 quarter	**12,649**	**6581**	**1482**	**3781**	**9**	**127**	**2**	**600**
Production output		**11,037**	**530**	**544**	**8**	**1212**	**4**	
Use per unit of production		**0 62**	**2 80**	**6 95**	**1 1**	**0 10**	**0 5**	
October	3561	2680	286	0	0	397	3	330
November	1954	1262	101	0	0	277	2	380
December	2013	1573	59	0	0	105	2	400
4 quarter	**7528**	**5515**	**446**	**0**	**0**	**779**	**7**	**1110**
Production output		**5126**	**79**	**0**	**0**	**1553**	**4**	
Use per unit of production		**1 08**	**5 65**	**0**	**0**	**0 50**	**1 75**	
1996 Use	**42575**	**27504**	**3625**	**6134**	**9**	**2828**	**24**	**3493**
Production output		**29,096**	**1087**	**836**	**8**	**5942**	**17**	
Use per unit of production		**0 896**	**3 33**	**7 34**	**1 3**	**0 48**	**1 42**	

Natural gas use in 1997, cubic meters

	Can making workshop		
Period	**Total, cubic meters**	**Can making, thousand cans**	**Use per one can**
January	200	721	0 278
February	230	787	0 292
March	450	2088	0 216
1 quarter	**880**	**3596**	**0 245**
April	660	2185	0 302
May	730	2903	0 251
June	900	4487	0 201
2 quarter	**2290**	**9575**	**0 239**
1 half-year	**3170**	**13171**	**0 241**
July	1240	4280	0 290
August	820	2749	0 300
September	1100	3764	0 292
3 quarter	**3160**	**10,793**	**0 293**
9 months	**6330**	**23,964**	**0 264**
October	760		

Thermal energy use per unit of production by months of 1997

Period	Canned milk	Butter	WMP	Powdered milk	Cheese	Juice
January	2 20	8 36	2 77			
February	1 48	6 66	0 63			
March	0 93	3 56	0 50			
1 quarter	**1 57**	**5 74**	**0 73**			
April	0 94	3 67	0 50		2 00	
May	0 61	3 20	0 11		2 00	
June	0 68	3 20	0 11	8 11	2 00	
2 quarter	**0 716**	**3 27**	**0 16**	**8 11**	**2 00**	
1 half-year	**0 96**	**3 86**	**0 27**	**8 11**	**2 00**	
July	0 54	2 11	0 10	9 25	1 88	
August	0 56	1 73	0 11	7 32	1 88	
September	0 60	2 06	0 11	7 67	1 48	
3 quarter	0 564	1 95	0 105	7 97	1 69	
9 months	0 708	2 536	0 158	8 00	1 86	

Steam use in condensed milk workshop in summer season

I Vacuum pan unit

1) Total steam consumption by one BURANG vacuum pan is ***3500*** kg per hour

In summertime two vacuum pans are operated daily, runtime of two vacuum pans per day is

- vacuum pan #1 - ***20*** hours
- vacuum pan #2 - ***20*** hours

Total overall steam consumption of two vacuum pans

$$3500 \times 40 = 140{,}000 \text{ kg/day}$$

Notes

1 Daily two vacuum pans run simultaneously

2 Required steam parameters

$$P = 6 \quad 8 \quad 10 \text{ atm}, t = 190^0$$

2) Steam use of pasteurizing is

$$450 \times 10 = 4500 \text{ kg},$$

10 is No 1 pasteurizing unit daily runtime in hours

Operation of two pasteurizing units

$$4500 + 4500 = 9000 \text{ kg}$$

Total Overall steam consumption for pasteurizing is ***9000*** kg daily

Steam parameters $P = 5$ ***atm***, $t = 180 - 190\ ^0C$

II Condensed milk cooling unit

1) Total daily runtime of vacuum coolers is ***24*** hours

One vacuum cooler uses ***1900*** kg of steam per hour, daily of steam for cooling

$$1900 \times 24 = 45{,}600 \text{ kg per day}$$

2) Low pressure steam use for tank steaming and piping sterilization

$$\sim 6000 - 7000 \text{ kg per day}, Q_{hour} = 292 \text{ kg per hour}$$

III Steam use for sugar syrup preparation

Daily ***8500*** kg per day, $Q_{hour} = 500$ kg per hour

IV Steam use for can sterilization in the canning unit

$$2200 \text{ kg per day}, Q_{hour} = 129 \text{ kg per hour}$$

Low steam pressure is used in syrup preparation and packing units

Hourly maximum load is as follows

- for vacuum pans two vacuum pans - $3500 + 3500$ ***kg*** $= 7000$ kg per hour
- for pasteurizing - $450 + 450 = 900$ kg per hour,

2) vacuum coolers

simultaneous hourly steam consumption for three vacuum coolers

$$1900 + 1900 + 1900 = 5700 \text{ kg per hour}$$

Low pressure steam use for sterilizing equipment and cooling piping

$$Q = 292 \text{ kg per hour}$$

3) steam use for sugar syrup preparation

$$500 \text{ kg per hour}$$

4) steam use for can sterilization in the packing unit

$$Q = 129 \text{ kg per hour}$$

Total $7000 + 900 + 5700 + 292 + 500 + 129 = 14521$ kg per hour

Steam use of powdered milk workshop in summer season

#	Equipment	Steam pressure, atm	Steam use, kg/hour	Runtime, hours	Total steam use of w/shop, kg
1	Vacuum pan # 1, 8000 kg of moisture evaporation per hour Tubular pasteurizer #1	8 5	3150 320	24 24	
2	Vacuum pan # 2 Tubular pasteurizer #2	8 5	3150 320	staggered	
3	Milk dryer VRA-4	12	3100	24	
4	Pasteurizing and cooling unit OPL-10	5	no >500	11	
5	Milk glue production line	5	480	24	
6	Milk glue dryer	5	400	20	
7	Cleaning solution tanks V = 10 cubic meters, 3 units	1 5	500	24	
Total			12		

In the summer season vacuum pans #1 and #2 with tubular pasteurizers can run simultaneously for up to 4 hours a day Boiling cycle is one hour

Steam-to-water heat exchanger of the space heating system

t^0 air = 3 ^{0}C

t^0 network water = 55 ^{0}C at the exchanger output

$Q_{steam} = 1200$ kg per hour

Technical specifications of steam using equipment of WMP workshop

#	Type and model of eqipment	Qty	T, ^{0}C	Steam pressure, MPa	Steam use, kg/hour	Average daily runtime, hours
1	Tubular pasteurizer TKOUN for milk	1	150	0 03-0 04	700	6
2	Tubular pasteurizer TKOUN for milk	1	150	0 03-0 04	700	6
3	Tubular pasteurizer TKOUN for milk	1	150	0 03-0 04	380	6
4	Pasteurizer cooling unit OPK-5	1	150	300 kPa	86	8
5	Pasteurizer cooling unit OP2-U-15	1	150	400 kPa	340	8
6	RZ-OZU-0 35 milk starter unit	8	150	0 03-0 05	100	2
7	Crate washing machine I1-OF3	1	150	0 2-0 3	250	4
8	Ya-OMP washing station	1	150	0 15	160	6
9	Chemical washing unit	1	150	0 05	600	4
10	Ya9-UPT cheese line	1	0 05	0 05	2 25	5
11	Long-life milk sterilizer	1	150	8 kg/cm^2	400	8

Negotiated (contracted) demand in 1997 (similar in 1995 and 1996)

January	-	1000 kW
February	-	1000 kW
March	-	1000 kW
April	-	1100 kW
May	-	1300 kW
June	-	1600 kW
July	-	1700 kW
August	-	1400 kW
September	-	1200 kW
October	-	1000 kW
Novembe	-	1000 kW
December	-	1000 kW

Thermal energy, Gcal, received from sugar plant

Month	Thermal energy in Gcal		
	1995	1996	1997
January	3379	3565	3831
February	4285	3391	2714
March	3377	3951	2730
April	4050	3334	2645
May	3866	3128	2156
June	5716	4846	5151
July	5661	3252	4693
August	5156	5444	4746
September	3771	3953	3843
October	3064	3561	2364
November	2870	1954	
December	2203	2013	

D.3. Results of measurement of parameters of energy

As the result of the analysis of the steam distribution system it was established that though the main pipelines are insulated many branch lines and condensate piping do not have such insulation

The details of non-insulated piping are given in the table below

Purpose of piping	W/shop	Length, meters	Diameter, mm	t, ^{0}C				Qty of valves
Safety valve	SDU	1	219	188			188	
Steam pipeline	SDU	8	102	100	97	95		
Hot water piping	SDU	15	89	60	60	60		
Steam pipeline	SDU	3	219	170				
Steam pipeline	CMW	2	50	100				3
Steam pipeline	CMW	3	76	176				2
Steam pipeline	CMW	4	89	183				
Steam pipeline	CMW	4	76	156	155			1
Condensate tank	SDU	3	1500					
Hot water tank	SDU	8	2500					

E. PLANT PHOTOGRAPHS

Фрагмент паропровода в районе теплопункта
Steam piping section at steam distribution unit

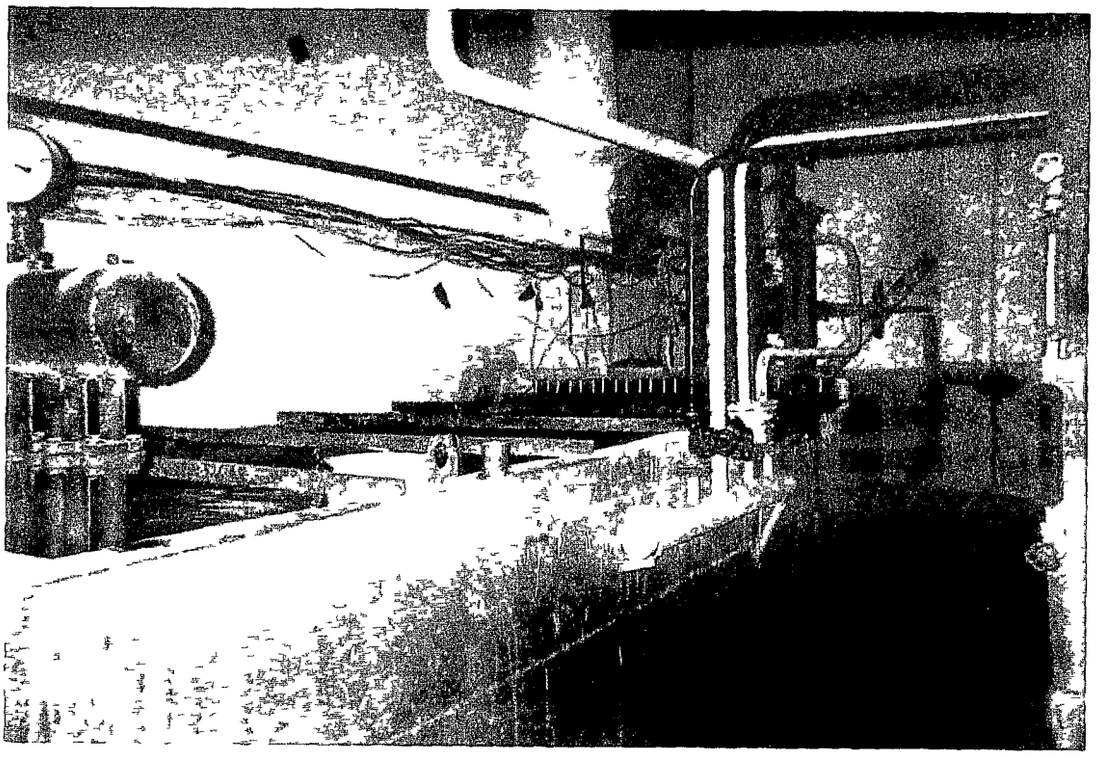

Установка для получения ледяной воды
Chilled water generator

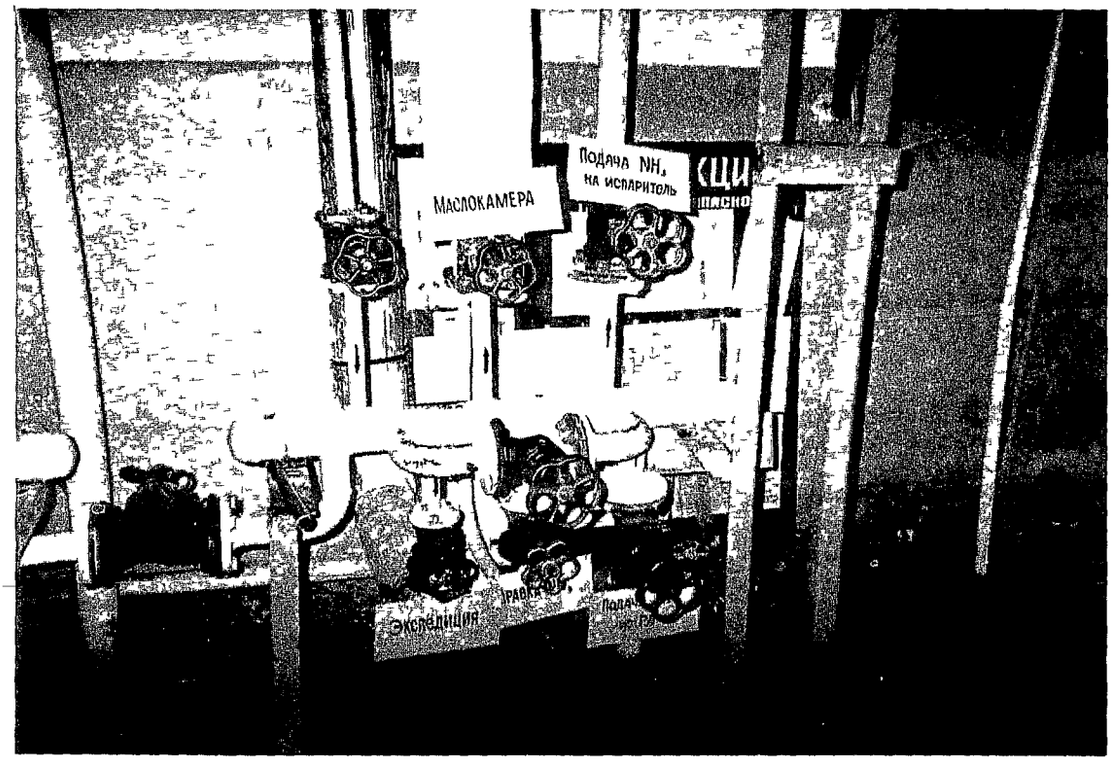

Аммиачная компрессорная комбината
Распределительный коллектор подачи аммиака потребителям
Ammonia compressor room of the plant
Ammonia supply distribution unit

F. CONVERSION FACTORS

Currency rates of exchange

1 hrivnia - local currency unit

1hrivnia = US$0 54 as of December 1997

Conversion factors

Heat

1 cal = 4 187 J

1 Ccal = 4 187 kJ = 3 968 BTU

1 Gcal = 4 187 x 10^3 = 4 187 GJ

1 BTU = 1055 J = 1 055 kJ = 1 055 x 10^3 MJ

Power

1 W = 3 6 x 10^3 J = 3 6 kJ

1 kW = 3 6 x 10^3 kJ = 3 6 MJ = 860 Ccal

1 MW = 3 6 x 10^3 MJ = 860 Ccal

1 Ccal = 1 163 x 10^3

1 Gcal = 1163 kW = 1 163 MW

1 kW = 0 102 HP (boiler)

1 kW = 1 34 HP (mech)

Pressure

1 kg/cm = 1 atm

1 atm = 101 325 kPa = 0 1 Mpa

1 bar = 10^5 Pa = 100 kPa = 0 1 Mpa

Length

1 mm =0 03937 in = 0 00328 ft

1 cm = 0 3937 in = 0 0328 ft

1 m = 3 937 in = 3 281 ft

Weight

1 gram = 2 2046 x 10^3 lb

1 kg = 2,2046 lb

1 t = 1000kg = 2 2046 x 10^3 ft

Area

1 cm^2 = 0 155 square in = 1 076 x 10^3 ft

1 m^2 = 1 55 x 10^3 square in= 10 76 square ft

Volume

1 m^3 = 35 31 cu ft = 1000 l

1l = 35 31 x 10^3 cu ft

1l = 0 264 US gal

Heat content

1 kJ/kg = 0 43 BTU/lb

1 kJ/m^3 = 26 84 x 10^3 BTU/cu ft

1 MJ/m^3 = 26 84 BTU/cu ft

1 Ccal/m^3 = 4,187 kJ/m^3 = 0 112 BTU/cu ft

Temperature

^{0}C = 0 56 (^{0}F-32)

G. ABBREVIATIONS AND UNITS OF MEASUREMENT