PN-ACC-471

Environmental Pollution
Prevention Project

POLLUTION PREVENTION IN METAL FINISHING

Training Manual

Prepared by

Hagler Bailly Consulting Inc
1530 Wilson Boulevard, Suite 900
Arlington, VA 22209-2406
HBI Reference No TR-95-062

Environmental Pollution Prevention
Project Number 936-5559
Contract Number PCE-5559-C-00-3021-00

March 1996

Sponsored by the U S Agency for International Development (USAID)

BEST AVAILABLE COPY

PN-ACC-471

POLLUTION PREVENTION
in
METAL FINISHING

Training Manual

Prepared by

Hagler Bailly Consulting Inc
1530 Wilson Boulevard Suite 900
Arlington, VA 22209-2406
HBI Reference No TR-95-062

Environmental Pollution Prevention
Project Number 936-5559
Contract Number PCE-5559-Q-00-3022-00

July 1995
Revised March 1996

sponsored by the U S Agency for
International Development
(USAID)

BEST AVAILABLE COPY

BEST AVAILABLE COPY

LIST OF EXHIBITS

1-1	Typical Metal Finishing Industry Wastes	1-3
2-1	Process Optimization Techniques for Cleaning and Degreasing	2-5
3-1	Typical Metal Finishing Process Step	3-2
3-2	Summary Table of Metal Finishing Industry Waste	3-5
3-3	Sludge Volume Generation	3-18
3-4	Three-Stage Counter-Current Rinse System	3-20
3-5	Multiple Reuse of Rinse Water	3-27
3-6	Chemical Rinse Water Recycling System	3-28
3-7	Ion Exchange System for Chronic Acid Recovery	3-31
3-8	Electrodialysis Flow Schematic	3-33
3-9	Metal Treatment/Finishing Replacement Technology Characteristics	3-36
3-10	Pollution Prevention Options	3-37
4-1	Pollution Prevention Summary - Painting Industry	4-13
5-1	Summary of Pollution Prevention Opportunities at 5 Metal Finishing Plants	5-5
5-2	Pollution Prevention Opportunities in Furniture Manufacturing	5-12
5-3	Original System	5-19
5-4	New System	5-20
5-5	Plating Shop Production Process	5-23
5-6	Original Pretreatment System	5-24
5-7	New Metal Recovery System	5-25
5-8	Original Operation (Rinses)	5-30
5-9	New Operation (Rinses and Treatment)	5-32

CONTENTS

CHAPTER 1	**INTRODUCTION**	**1-1**
1 1	Background and Purpose of Manual	1-1
1 2	Background	1-1
CHAPTER 2	**PRETREATMENT AND PREPARATION OF METALS**	**2-1**
2 1	Introduction	2-1
2 2	Removal and Stripping of Coatings	2-2
	2 2 1 Process Description	2-2
	2 2 2 1 Assess the Need to Strip	2-3
	2 2 2 2 Use the Most Durable Abrasive Practical	2-3
	2 2 2 3 Use Blasting Surface Standards	2-3
	2 2 2 4 Use Abrasives in Place of Chemical Strippers	2-3
	2 2 2 5 Use of Cryogenic Methods	2-3
	2 2 2 6 Use of High-Temperature Thermal Technologies	2-4
	2 2 2 7 Use of Less Hazardous Strippers	2-4
	2 2 3 Clean Technologies for Stripping	2-4
2 3	Cleaning and Degreasing of Metal Surfaces	2-4
	2 3 1 Process Description	2-4
	2 3 2 Pollution Prevention Strategies	2-4
	2 3 3 Alternatives to Chlorinated Organic Solvents	2-7
	2 3 3 1 Aqueous Cleaners	2-7
	2 3 3 2 Semi-aqueous Cleaners	2-8
	2 3 3 3 Abrasive and Non-abrasive Media	2-9
	2 3 3 4 Cleaning Elimination	2-9
	2 3 3 5 Soil Modification	2-9
	2 3 3 6 Solvent Emission Reduction	2-10
	2 3 3 7 Emerging Technologies	2-10
	2 3 4 Considerations in Cleaner Selection	2-11
CHAPTER 3	**METAL TREATMENT AND FINISHING**	**3-1**
3 1	Introduction	3-1
	3 1 1 Process Description	3-1

	3 1 1 1 Metal Treatment	3-2
	3 1 1 2 Metal Finishing	3-3
	3 1 2 Waste Description	3-4
3 2	Pollution Prevention Strategies	3-6
	3 2 1 Introduction	3-6
	3 2 2 Source Reduction	3-6
	3 2 2 1 Process Baths	3-6
	3 2 2 2 Rinse Systems	3-17
	3 2 2 3 Improved Housekeeping	3-24
	3 2 3 Recycling and Resource Recovery	3-25
	3 2 3 1 Reusing Waste Material	3-25
	3 2 3 2 Recycling Rinse Water and Process Baths	3-27
	3 2 3 3 Recycling Solvents	3-32
	3 2 4 Replacement Technologies	3-34
	3 2 4 Summary	3-37
CHAPTER 4	**ORGANIC FINISHING (PAINTING)**	**4-1**
4 1	Introduction	4-1
	4 1 1 Process Description	4-1
4 2	Pollution Prevention Strategies	4-3
	4 2 1 Improved Operating and Inventory Practices	4-3
	4 2 1 1 Eliminate the Need to Paint	4-3
	4 2 1 2 Monitoring Incoming and As Applied Paint Quality (Solids Content)	4-3
	4 2 1 3 Standardize Paints and Colors	4-4
	4 2 1 4 Implement Strict Material Tracking and Control	4-4
	4 2 1 5 Return Expired Materials to Supplier	4-5
	4 2 1 6 Set Application Standards	4-5
	4 2 2 Efficient Use of Application Equipment	4-6
	4 2 2 1 Improving Spray Equipment (Gun) Transfer Efficiency	4-7
	4 2 3 Equipment Cleaning and Stripping Alternatives	4-8
	4 2 3 1 Equipment Modifications	4-9
	4 2 3 2 Solvent Use Reduction Measures	4-9
	4 2 3 3 Alternatives to Fast-Evaporating Solvents	4-9
	4 2 3 4 Use of Enclosed Gun Cleaners	4-10
	4 2 4 Segregation	4-10
	4 2 5 Process Modifications	4-10
	4 2 6 Treatment and Recovery Alternatives	4-11
	4 2 7 Substitute Coatings/Alternative Technologies	4-12
	4 2 8 Pollution Prevention Strategy Summary	4-13

CHAPTER 5 CASE STUDIES IN METAL FINISHING 5-1

5.1 Pollution Prevention Opportunities in Metal Finishing in Rapidly Industrializing Countries 5-1
5.1.1 Introduction 5-1
5.1.2 Key Pollution Prevention Examples 5-2
5.1.2.1 Surface Preparation 5-2
5.1.2.2 Electroplating 5-3
5.1.2.3 Painting 5-3
5.1.2.4 Galvanizing 5-4
5.1.3 Plant Descriptions 5-7
5.1.3.1 Facility MB 5-7
5.1.3.2 Facility MC 5-7
5.1.3.3 Facility MA 5-8
5.1.3.4 Facility MS 5-8
5.1.3.5 Facility MN 5-9
5.2 Case Study 1 EP3 Experience in Metal Furniture Manufacture 5-9
5.2.1 Executive Summary 5-9
5.2.2 Facility Background 5-10
5.2.3 Manufacturing Process 5-10
5.2.4 Environmental Problems 5-11
5.2.5 Pollution Prevention Opportunities 5-11
5.2.5.1 Replace Sulfuric Acid and Benzene with Alkaline Solution for Cleaning 5-12
5.2.5.2 Standardize Sulfuric Acid and Eliminate the Use of Inhibitors 5-12
5.2.5.3 Eliminate the Use of Copper Cyanide 5-13
5.2.5.4 Improve Process Parameters 5-13
5.2.5.5 Reduce Loss of Process Solution During Electroplating (nickel/chrome) 5-13
5.2.5.6 Replace Zinc Cyanide with Zinc Chloride 5-13
5.2.5.7 Improve Water-use Practices 5-13
5.2.5.8 Improve Paint Application Techniques 5-13
5.2.6 Conclusion 5-14
5.3 Case Study 2 EP3 Experience in Electroplating 5-14
5.3.1 Facility Background 5-15
5.3.2 Manufacturing Process 5-15
5.3.3 Existing Pollution Problems 5-15
5.3.4 Pollution Prevention Opportunities 5-16
5.3.4.1 Polishing Debris 5-16
5.3.4.2 Degreasing 5-16
5.3.4.3 Acid Dips 5-16

	5 3 4 4 Inefficient Cyanide Electroplating	5-16
	5 3 4 5 Unnecessary Nickel and Chrome Waste	5-17
	5 3 4 6 Excessive Water Use	5-17
5 4	Case Study 3 Metal Recovery - Dragout Reduction	5-17
	5 4 1 Introduction	5-18
	5 4 2 Basis for Design	5-19
	5 4 3 Methods and Materials	5-19
	5 4 4 Economics	5-21
	5 4 5 Results and Discussions	5-21
5 5	Case Study 4 Metal Recovery - Ion Exchange/Electrolytic Recovery	5-22
	5 5 1 Introduction	5-22
	5 5 2 Basis for Design	5-23
	5 5 3 Methods and Materials	5-24
	5 5 4 Economics	5-27
	5 5 5 Results and Discussions	5-27
5 6	Case Study 5 Metal Recovery - Dragout Reduction	5-28
	5 6 1 Introduction	5-29
	5 6 2 Basis for Design	5-30
	5 6 3 Methods and Materials	5-31
	5 6 4 Economics	5-33
	5 6 5 Results and Discussion	5-34

APPENDIX 1 USEPA GUIDE TO CLEANER TECHNOLOGIES - ORGANIC COATING REMOVAL

APPENDIX 2 USEPA WASTE MINIMIZATION IN METAL PARTS CLEANING

APPENDIX 3 USEPA GUIDE TO CLEANER TECHNOLOGIES - ALTERNATIVES TO CHLORINATED SOLVENTS FOR CLEANING AND DEGREASING

APPENDIX 4 USEPA GUIDE TO CLEANER TECHNOLOGIES - ALTERNATIVE METAL FINISHES

APPENDIX 5 USEPA GUIDE TO CLEANER TECHNOLOGIES - ORGANIC COATING REPLACEMENTS

APPENDIX 6 INFORMATION RESOURCES ON THE METAL FINISHING INDUSTRY

APPENDIX 7 EP3 METAL FINISHING AND ELECTROPLATING CASE STUDIES

CHAPTER 1
INTRODUCTION

1 1 BACKGROUND AND PURPOSE OF MANUAL

This manual provides an introduction to the application of pollution prevention techniques in various metal finishing processes including degreasing and cleaning metal pretreatment metal plating (electroless and electrolytic plating), and painting Excerpts from previously prepared metal finishing guides are also provided in Appendices 1 through 5 so that the reader may review and evaluate metal finishing pollution prevention strategies and technologies in greater depth

This text is part of a series of four manuals which cover a broad range of pollution prevention topics This series includes "Pollution Prevention Concepts/Applications", "Pollution Prevention in the Textiles Industry and 'Pollution Prevention in Food Industries The first manual discusses the theory and practice of pollution prevention techniques in general terms while the next two texts cover the pollution prevention opportunities which exist in specific industrial sectors There are plans to prepare additional manuals covering ISO 14000 and pollution prevention in the mining tanning and chemical industries

The user of this metal finishing manual should view it as a first source in pursuing process and equipment changes in this industry The manual is intended to assist industry professionals in determining 1) where there might be potential for improving process efficiency and profitability in metal finishing facilities and 2) which alternatives are worthy of consideration for implementation Users of this manual should not rely on its contents alone to carry out specific measures but rather should seek assistance from experienced professionals in the field such as those listed in the attached appendices However as a general rule of thumb those process improvement measures which can be implemented at no cost or low cost or with minimal effort should be considered first while the more capital and labor intensive options will require more extensive review

1 2 BACKGROUND

The metal finishing industry uses a wide variety of materials and processes to clean etch and plate metallic and nonmetallic surfaces to provide desired surface properties These materials include solvents and surfactants for cleaning acids and bases for etching and solutions of

metal salts and other compounds to plate a finish onto a substrate Physical chemical and electrochemical processes are all used to finish metal workpieces The processes may simply polish the surface to provide a bright appearance or apply another metal to change the surface properties or appearance The three stages of metal finishing include 1) pretreatment and preparation of metals 2) inorganic surface treatment and finishing and depending on the product 3) organic finishing (painting)

Wastewater solid waste and air emissions are generated by the metal finishing process The primary source of waste in the metal finishing industry occurs in the rinsing operation Rinse waters often contain low concentrations of process chemicals carried into the rinse on the workpiece Typical rinsewater treatment produces a metal hydroxide sludge that can be a hazardous waste The origin and characteristics of significant wastes produced in the metal finishing industry are shown in Exhibit 1-1

Experience in the U S and abroad has shown that the metal finishing industry has the potential for significant cost recovery and waste reduction through the implementation of pollution prevention techniques

Exhibit 1-1 Typical Metal Finishing Industry Wastes

Waste	Potential Hazard	Waste Stream	Process
Alkali (hydroxide)	Corrosivity	Wastewater	Cleaning etching
Acid (nitric sulfuric hydrochloric hydrofluoric)	Corrosivity	Wastewater	Cleaning pickling etching bright dipping
Surfactants	Aquatic toxicity	Wastewater	Cleaning
Oil and grease	Aquatic toxicity	Wastewater, spent solvent	Cleaning
Cadmium zinc nickel copper other metals	Toxicity	Plating bath drag-out rinse water spent filters sludge	Plating
Perchloroethylene trichloroethylene other solvents	Inhalation, dermal	Spent solvent (liquid or sludge), air emissions	Cleaning
Cyanide	Toxicity	Plating bath drag-out rinse water other wastewater	Plating tumbling stripping heat treating desmutting
Chromates	Toxicity	Plating bath drag-out rinse water other wastewater mist	Plating chromating etching
Water		Rinse water drag-out process bath air emission (evaporation) cooling water boiler blowdown	Various

CHAPTER 2
PRETREATMENT AND PREPARATION OF METALS

2 1 INTRODUCTION

Pretreatment and preparation of metals takes place in two steps The first consists of the removal and stripping of coatings and the second consists of the cleaning and degreasing of metal surfaces

In stripping old organic coatings are removed from the workpiece by mechanical or chemical means Environmental problems arise from the applied chemicals or removed coatings Chemicals create air emission problems because they contain volatile organic compounds (VOCs) and also must be disposed of when they are spent The removed material result in solid waste which, depending on the contents of the paint, may be hazardous

Cleaning and degreasing is performed to remove contaminants from the surface of the metal such as oil grease grit, and metal chips This process prepares the part for further treatment such as painting or plating by affording better adhesive properties as well as increasing the quality of the finish Three media are used to clean and degrease metals these are solvents aqueous media and abrasives

The reader should note that this chapter reviews several pollution prevention measures and alternative technologies used in the pretreatment and preparation of metals in general terms In order to compare the advantages and disadvantages of any one measure or technology to another, it is recommended that the reader refer to the appropriate appendix in the back of this guide The appendices pertaining to the topics covered in this chapter include

---

[1] This chapter is derived from the following documents
H Freeman Industrial Pollution Prevention Handbook McGraw-Hill, Inc 1995 (Chapter 29 and 43)
Minnesota Association of Metal Finishers Metal Finishing Pollution Prevention Guide ' July 1993
USEPA Alternatives to Chlorinated Solvents for Cleaning and Degreasing' February 1994 Guide to Cleaner Technologies EPA/625/R 93/016
USEPA Cleaning and Degreasing Process Changes February 1994 Guide to Cleaner Technologies EPA/625/R-93/017
USEPA Waste Minimization in Metal Parts Cleaning August 1989 EPA/530 SW-89-049
USEPA Organic Coating Removal February 1994 Guide to Cleaner Technologies EPA/625/R 93/015

Appendix 1 Organic Coating Removal
Appendix 2 Waste Minimization in Metal Parts Cleaning
Appendix 3 Alternatives to Chlorinated Solvents for Cleaning and Degreasing

2 2 REMOVAL AND STRIPPING OF COATINGS

2 2 1 Process Description

The three approaches used conventionally for stripping include abrasive blasting manual grinding and chemical stripping

In abrasive blasting paints and other organic coatings are physically removed from metallic surfaces This process uses mechanical energy to hurl particles at high speed against the paint film The particle media may be composed of sand glass, plastic and steel shot Blasting is used on large stationary workpieces or small pieces that cannot withstand heat or chemical stripping The main environmental problem associated with this process is the disposal of the solid waste which is composed of the abrasive media and the materials removed from the part surface

Manual grinding processes are used to physically remove very tenaciously adherent organic or inorganic coating with hand or power tools which abrade cut or scrape away the film This process is labor intensive and is not always practical for large or irregularly shaped parts The environmental problem associated with grinding is direct worker exposure to the abraded material during the removal process A second major environmental problem is disposal of the often hazardous abraded material

Chemical stripping processes remove the organic coatings by direct application of chemicals to the coated surface The solvents soften or dissolve the coatings and are then scraped away or otherwise mechanically removed Chemical stripping processes are used when the workpiece to be stripped is uneven has many small crevices or is not amenable to mechanical removal The major environmental problems associated with chemical stripping are high emissions of VOCs explosion or fire hazards and solid or liquid waste disposal

Waste reduction strategies in parts stripping and cleaning can be subdivided in the following categories

- Avoid the need to clean
- Maximize cleaning efficiency
- Select the least hazardous medium for cleaning
- Segregate cleaning wastes
- Maximize recycling and reuse

2 2 2 1 Assess the Need to Strip In many equipment maintenance painting operations the routine practice is to remove all paint down to bare metal When the reason for repainting is only cosmetic (i e the top coat has faded but the base coat and primer are still intact) selective removal of the top coat with abrasives will reduce waste generation At some facilities this policy change has resulted in a 90-percent reduction in the number of parts being fully stripped

2 2 2 2 Use the Most Durable Abrasive Practical Abrasives commonly used for parts preparation include steel grit alumina garnet and glass beads Because of its hardness and durability steel grit can be reused repeatedly and is the abrasive material which generates the least amount of waste per unit of surface area stripped To maximize the reuse of steel grit it must be kept dry and free of rust

Alumina is considered to be a multi-purpose material that is less aggressive and less durable than steel grit Its use results in a smoother surface profile and less removal of substrate material Garnet and glass beads are the least aggressive and are often used in a single pass operation

2 2 2 3 Use Blasting Surface Standards Abrasive blasting a surface longer than necessary creates excess waste and reduces productivity Blasting standards or measuring devices are used to define the level of surface scratching or ' profile ' desired Two styles of standards are available visual disk and photographic

2 2 2 4 Use Abrasives in Place of Chemical Strippers Chemical-based paint strippers may be referred to as hot (heated) or cold Many hot strippers contain sodium hydroxide and other organic additives while cold strippers contain methylene chloride along with other additives such as phenolic acids cosolvents water soluble solvents thickeners and sealants Handling and disposal of spent baths and rinses is a major problem for facilities employing these strippers

Although abrasive blasting is not an entirely trouble free operation from an environmental perspective it offers a number of advantages over the use of solvents Abrasive blasting utilizes inert stripping particles and offers the possibility to recycle the abrasive grit thereby minimizing the amount of waste generated

Abrasive blasting is performed in an open area or in an enclosed blasting booth and requires that the operator be protected from airborne dust by wearing a self-contained breathing equipment After blasting the used abrasive may be shoveled or vacuumed from the area and processed for reuse Some systems combine dust control and abrasive recovery by including a vacuum collection pickup device with the blasting nozzle

2 2 2 5 Use of Cryogenic Methods Cryogenic paint removal uses liquid nitrogen immersion at approximately -200°F which causes the paint to contract and thus breaks the adhesive bond with the substrate

2 2 2 6 Use of High-Temperature Thermal Technologies Burnoff ovens molten salt baths or heated fluidized sand beds are widely used to remove paint overspray from hooks racks grates and body carriers used in automotive plants Stripped parts are left with a residue of ash which can be removed by rinsing

2 2 2 7 Use of Less Hazardous Strippers Because of environmental concerns over the use of methylene chloride and phenolic-based strippers many new and less hazardous stripping formulations have been researched and developed However these alternative strippers present some disadvantages as compared to the standard formulations

2 2 3 Clean Technologies for Stripping

Several of the technologies which have been developed to reduce the environmental or health impact of stripping operations are discussed in greater detail in **Appendix 1 - US EPA Guide to Cleaner Technologies - Alternative Coating Removal Technologies** The alternative technologies presented in document include plastic or wheat starch blasting burnoff or molten salt coating removal pressure water blasting and cryogenic blasting

2 3 CLEANING AND DEGREASING OF METAL SURFACES

2 3 1 Process Description

Halogenated solvents have traditionally been used for degreasing applications in the metal finishing industry usually in a vapor degreaser Typical solvents used are 1 1 1-trichloroethane (TCA) 1 1 2-trichloro-1 2 2 -trifluoroethane (Freon CFC-113) perchloroethylene (PERC) trichloroethylene (TCE) and methylene chloride (MECL) In the US the manufacture of TCA and CFC-113 will be phased out by December 31 1995 while PERC TCE and MECL emissions will be regulated under U S air pollution regulations The increasing regulatory pressure in the US has prompted the development of non-halogenated degreasing alternatives

2 3 2 Pollution Prevention Strategies

Measures for reducing waste and improving efficiency in metal cleaning and degreasing processes can be divided into two categories media substitutions and process optimization There are three media used for cleaning and degreasing metal substrates conventional organic solvents (dip baths or vapor degreasing) aqueous cleaners and abrasives As shown in Exhibit 2-1 for each of the cleaning media used there is a particular set of measures which can be used to reduce waste and improve efficiency Many of these process optimization techniques for solvent

and aqueous dips apply not only to cleaning and degreasing operations but also to subsequent steps in the metal finishing process involving baths

It is important to note that even though process optimization measures can be applied to cleaning operations that are conducted with aqueous cleaners the use of aqueous solvents in place of organic solvents is in itself a waste reduction measure A detailed discussion of waste reduction measures is given in **Appendix 2 - Waste Minimization in Metal Parts Cleaning**

Exhibit 2-1
Process Optimization Techniques for Cleaning and Degreasing

Cleaning Medium	Process Optimization Techniques
Conventional Solvents (Dip degreasing)	Eliminate the need for cleaning or degreasing
	Use less toxic solvents such as emulsion cleaners aqueous solvents and abrasives
	Standardize solvent use Use the least number of different solvents possible in the facility
	Consolidate cleaning operation into one centralize degreasing operation
	Avoid contamination of solvent - Parts should be checked for undue contamination such as moisture before dipping
	Maintain equipment - Racks and barrels should be maintained so as not to introduce corrosion products (such as rust) into the solvent
	Careful solvent addition Adding even a small amount of the wrong solvent to a tank can render the entire batch useless
	Sludge removal Metal fines can catalyze reactions that lead to decomposition of the solvent Continuous filtering is helpful
	Control evaporative losses The location of the cleaning tanks is very important for reducing evaporative losses Avoid drafty and heated areas
	Reduce drag-out Drag out refers to liquid that comes along on the part as it is removed from the tank Methods for reducing drag-out include proper racking increased drainage and installation of drain boards
	Use counter-current cleaning - Parts should be passed through a series of cleaning tanks or compartments of increasing purity Counter-current cleaning will reduce the amount solvent used by maintaining for a longer period of time a high degree of solvent quality in the final cleaning tank
	Keep solvents segregated For recycling it is much easier to separate a solvent from its impurities than to separate two solvents

Cleaning Medium	Process Optimization Techniques
Conventional Solvents (Dip degreasing) continued	Keep waste solvents as free from water solids and garbage as possible
	Label the chemical content on each waste container
	On-site recycling - Methods include gravity separation filtration batch distillation fractional distillation evaporation
	Off-site recycling
Vapor Degreasing	Limit entrance/exit speeds - Solution and vapors are lost when parts are moved in or out of the unit too quickly
	Limit workload size - Use baskets having an area less than 50% of the degreaser opening to limit vapor drag-out due to piston effect
	Avoid work shock Work shock occurs when a heavy load is introduced into the degreaser resulting in the collapse of the vapor blanket and infiltration of air into the cleaning unit
	Maintain temperature of solvent - The temperature of the solvent degreaser should be maintained at a level adequate for vapor production to ensure that the degreaser functions properly
	Allow sufficient time in the degreaser - Ensure that all parts have reached the temperature of the vapor degreaser so that condensation has ceased
	Spray only below the vapor zone - The spray pattern should be a solid stream not a fine mist
	Maintain proper solvent level in sump - In addition to excessive water contamination a major cause of the acidification of chlorinated solvents is exposure solvent vapor to the heating coils
	Minimize vapor diffusion - Vapor diffusion results in air emissions
Aqueous Cleaners	Maintain solution quality
	Conduct precleaning inspections - All parts entering tanks should be free of solvents and other cleaners
	Avoid unnecessary loading which can rapidly decrease cleaner efficacy
	Provide continuous heating
	Practice proper solution make up mix thoroughly and heat to appropriate temperature
	Remove sludge and soils promptly
	Monitor cleaning solution strength
	Maintain equipment

Cleaning Medium	Process Optimization Techniques
Aqueous Cleaners (continued)	Reduce drag out
	Use demineralized water
	Use counterflow rinsing
	Use spray rinsing Rinsing efficiency can be increased by installing spray systems
	Install fog nozzles - These nozzles use much less water than conventional spray systems
	Employ closed loop systems
Abrasives	Use a greaseless or water-based binder for buffing or polishing
	Control water level in mass finishing operations - Water level control is extremely important in order to achieve maximum efficiency in mass cleaning operations

2 3 3 Alternatives to Chlorinated Organic Solvents

There are several alternative technologies and techniques available to eliminate or significantly reduce the use of halogenated solvents These alternatives include

- Aqueous cleaners
- Semi-aqueous cleaners
- Petroleum hydrocarbons
- Abrasive and non-abrasive media
- Supercritical Fluids
- Cleaning elimination
- Soil modification
- Solvent emission reduction

Some of the key alternatives are listed below but a more comprehensive description is given in **Appendix 3 - Alternatives to Chlorinated Solvents for Cleaning and Degreasing**

2 3 3 1 Aqueous Cleaners Aqueous cleaners are water-based solutions that may contain water conditioners corrosion inhibitors organic surfactant and varying amounts of alkaline builders The alkaline salts dissolve fatty compounds by saponification the surfactant provide emulsification and/or dispersion of the oils while the water acts as an excellent solvent for inorganic materials

Aqueous cleaners are applied generally by immersion spray or a combination of the two processes in batch conveyorized or rotary systems Higher temperature and increased agitation usually achieved by solution recirculation or ultrasonics will significantly improve the performance of the cleaning operation

A water rinse (spray or immersion) is required to remove the residue which remains on the parts after the cleaning step The use of deionized water in the rinse bath and the addition of heat or surfactant (rinse aids) greatly improve rinsing performance Drying of the parts or the addition of a rust inhibitor to the rinse bath may also be required depending upon downstream processes and the tendency of the metal substrate to rust Drying can be accomplished through the use of heated final rinses drying ovens heated blowers infrared dryers or centrifugal dryers Water can also be blown off manually with compressed air or displaced with a rust inhibiting oil or alcohol

The rinsewater and eventually the spent cleaning solution may need treatment prior to discharge from the facility If this is the case, the rinses and the cleaning solution must be analyzed to determine whether a pH adjustment and/or metals precipitation is required There is likely to be an increased chemical oxygen demand (COD) loading in the plant effluent as a result of the soils removed by the cleaning solution The wastewater considerations of aqueous cleaning are generally cleaner- soil- and process-specific but the need for analytical work is common to all cases

The principal advantage of aqueous cleaners is their ability to easily remove many types of oils greases and inorganic materials Process design and cleaner formulation flexibility allow process optimization for difficult applications, in many cleaning tasks aqueous cleaners outperform halogenated solvents In addition the use of aqueous cleaners eliminates the costs and increasing regulatory responsibilities associated with halogenated solvents

The disadvantages of aqueous cleaners include higher energy costs associated with heated solutions and dryers increased water consumption, potential wastewater treatment requirements and the increased floor space that may be needed The operating temperatures of some of these solutions may also preclude the applicability of this process to heat-sensitive parts

2 3 3 2 Semi-aqueous Cleaners Semi-aqueous cleaners contain water-immiscible solvents that are dispersed in an aqueous phase through the use of emulsifiers surfactant or coupling agents The solvents are generally high molecular weight compounds such as terpenes and petroleum hydrocarbons When a part is immersed in a bath containing a semi-aqueous cleaner the organic soils are dissolved in the solvent phase while the inorganic contaminants are dissolved or remain suspended in the solvent and/or water phase

Semiaqueous cleaners are generally applied by immersion spray or a combination of the two processes in batch conveyorized or rotary systems Agitation will significantly enhance

17

cleaning performance but care must be taken to avoid the formation of flammable mists Agitation is usually provided by solution recirculation or ultrasonics Higher temperatures may also increase the cleaning performance of some semi-aqueous cleaners but depending on the type of solvent involved heating may increase the evaporation flammability and the degradation of the cleaner

A water rinse (spray or immersion) is required to remove the residue which remains on the part after the cleaning step The use of deionized water in the rinse bath and the addition of heat or surfactant (rinse aids) greatly improve rinsing performance

Advantages of semi-aqueous cleaners include the ability to solvate soils as with solvent cleaning and the ability to develop formulations for specific soils Disadvantages include the generally low saturation capacity of the cleaner solutions safety and environmental concerns relating to flammability and aquatic toxicity and wastewater treatment concerns resulting from the COD load generated by the cleaner solutions

2 3 3 3 Abrasive and Non-abrasive Media The removal of contaminants with abrasive and non-abrasive media is achieved by the mechanical action between the media and the parts Abrasive media include silica sand aluminum oxide nut shells, glass beads and plastic beads Nonabrasive media include baking soda carbon dioxide and water This type of cleaning process is used for the removal of gross soils

Abrasive media are applied using either wet or dry methods Wet application involves pumping suspended abrasives at high pressure or using compressed air to apply an agitated slurry to the parts Dry application methods include direct pressure application from a pressurized tank induction blasting by mixing the media with air in the application gun media application by centrifugal force and vibration or tumbling with abrasive media Some type of enclosure is usually required if particles are airborne or if the material is caustic

The principal advantage of abrasive cleaning is the low toxicity or inert nature of the media Its disadvantages include labor intensive application the possibility of soil embedment in the parts and its limited applicability to intricate parts

2 3 3 4 Cleaning Elimination Cleaning elimination can be used to reduce or eliminate solvent utilization Often parts are degreased with halogenated solvents regardless of the other cleaning steps in the production process, in many cases the solvent degreasing operation is unnecessary and can be eliminated

2 3 3 5 Soil Modification Soil modification involves changing the type of contaminant which soils the parts or possibly eliminating the contaminant altogether Changing a standard machining fluid to one which is more amenable to an aqueous cleaning operation is one example of soil modification

2 3 3 6 Solvent Emission Reduction Effective reduction of solvent emissions in metal finishing facilities can be generally achieved by improving the design and operation of the vapor degreasers Emission capture technologies such as carbon absorption also exist but can quite costly

The emission reduction options for vapor degreasers include

- use minimum heat and sufficient water cooling to contain the vapor blanket
- cover the degreaser
- avoid air movement over the degreaser
- extend the freeboard
- decrease drag-out through part orientation and proper degreaser operation,
- eliminate spraying,
- spray in or below the vapor zone

2 3 3 7 Emerging Technologies Two processes are emerging as possible replacements for halogenated solvent degreasing

- supercritical fluid cleaning,
- and vacuum degreasing

Supercritical fluid cleaning Supercritical fluids such as carbon dioxide and some light hydrocarbons acquire solvent capabilities when they are above their respective critical temperatures and pressures In this cleaning process the parts are placed in a vessel and supercritical carbon dioxide is passed over the part to dissolve the oils The contaminant laden carbon dioxide steam in then collected in another vessel and its pressure is reduced Below the critical pressure the oils and contaminants are no longer soluble in the carbon dioxide and separate from the carbon dioxide The clean carbon dioxide can then be recompressed and reused The use of supercritical carbon dioxide has been investigated for the cleaning of precision parts

Vacuum degreasing Vacuum degreasing, or vacuum deoiling is a process that uses a vacuum furnace to alter the boil-off of oils from parts The vaporized oil is condensed and collected in a cold heat exchanger for recycling while the non-condensable gases are vented from the furnace Although this technology has been around for some years it is only now being examined as a possible replacement for halogenated solvent degreasing Handling of the vented gas streams, machine fumes and vacuum pump exhaust can however pose some environmental concerns

2 3 4 Considerations in Cleaner Technology Selection

The replacement of chlorinated solvent cleaners can be complex due to the specificity of the various alternatives and the characteristics of the parts and contaminants Careful consideration must be given to the characteristics and to the effects of the cleaning operation on the workpiece The most important factors which must be considered in the selection of an alternative include

Type of Substrate The cleaner must be compatible with the substrate Some cleaners may attack and damage certain substrates

Type of Soils It is necessary to determine the type of soil which contaminates the part in order to fin a suitable cleaner It may be possible to modify soils for easier removal

Application Method Different application methods can be used such as immersion agitated immersion and spray The performance of an individual cleaner can be strongly affected by the method of application

Waste Treatment The effect of a particular cleaner on waste treatment performance must be assessed The presence of chelators can severely disrupt the operation of a precipitation or ion exchange system

Health and Safety The regulatory health and safety impact of a particular cleaner must be studied

Ultimately all of the above points must be considered for the successful implementation of a cleaning system There are many possible combinations of cleaners and application methods that can be appropriate for replacing chlorinated solvents in cleaning applications

CHAPTER 3
METAL TREATMENT AND FINISHING

3 1 INTRODUCTION

The metal finishing industry uses a wide variety of materials and processes to clean etch and plate metallic and nonmetallic surfaces to provide desired surface properties The materials include solvents and surfactants for cleaning, acids and bases for etching, and solutions of metal salts and other compounds to plate a finish onto a substrate Physical, chemical, and electrochemical processes are all used to finish metal workpieces The processes range from simply polishing the parts to achieve a bright surface to applying another metal to a part to change its surface properties or appearance

The reader should note that this chapter reviews several pollution prevention measures and alternative technologies used in metal treatment and finishing industry It is recommended that the reader also refer to Appendix 4 USEPA Guide to Cleaner Technologies Alternative Metal Finishes for a detailed discussion of the advantages and disadvantages of the various metal finishing alternatives

3 1 1 Process Description

Physical processes used in the metal finishing industry -- such as buffing abrasive blasting grinding tumbling and polishing -- do not generate as much waste as chemical and electrochemical processes Physical processes involve the use of a solid material (or abrasive) to change the surface characteristics of parts and generate wastes which contain the abrasive and the material removed from the surface Paint stripping by sand blasting is an example of a physical finishing process

---

[1] This chapter is derived from the following documents
Guides to Pollution Prevention The Metal Finishing Industry US Environmental Protection Agency Cincinnati Ohio 1992
H Freeman Industrial Pollution Prevention Handbook McGraw-Hill Inc 1995 (Chapter 43)
Minnesota Association of Metal Finishers Metal Finishing Pollution Prevention Guide July 1993

The industry also uses chemical processes (degreasing, cleaning pickling etching coating and electroless plating) and electrochemical processes (plating electrocleaning electropolishing anodizing)

The chemical and electrochemical operations are generally conducted in baths (or tanks) and are followed by a rinsing step Exhibit 3-1 illustrates a typical chemical or electrochemical process step in which the workpiece is immersed first in the process bath and then in the rinse tank The drag-out or the process solution which is carried out of the bath together with the part either drains off the workpiece as it is transferred to the next tank or is washed off in the rinse water

Exhibit 3-1
Typical Metal Finishing Process Step

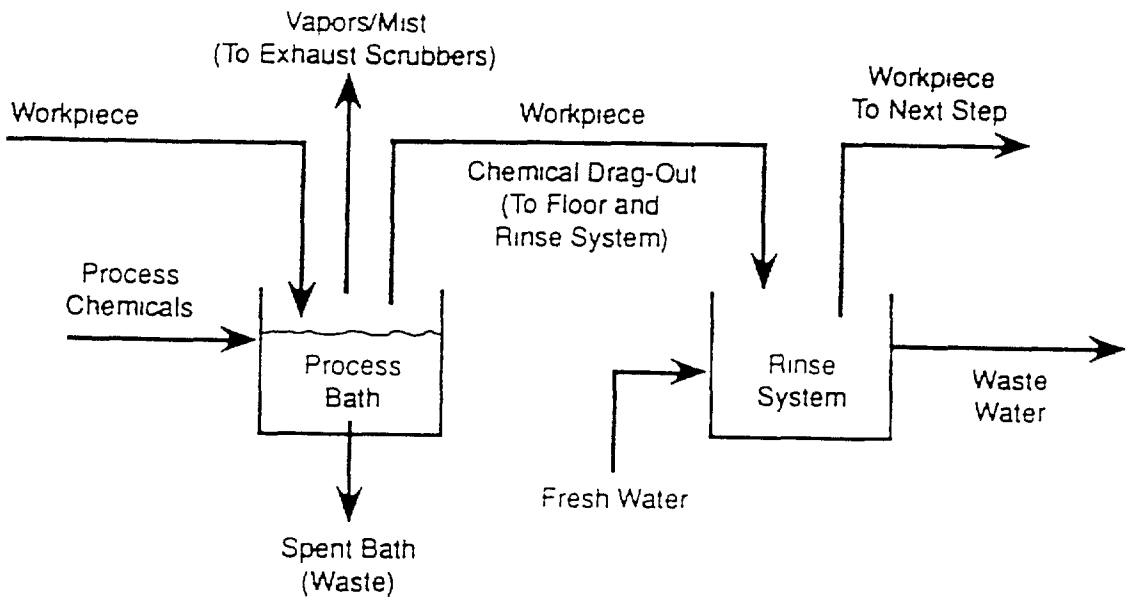

A description of the major metal treatment and finishing steps follows

3 1 1 1 Metal Treatment Metal treatments fall into two categories chromating and phosphating They are utilized by industry to improve the surface properties of a metal for specific needs including corrosion resistance better paint adhesion and overall durability These processes are batch operations in which the metal workpiece is either immersed in a series of chemical baths or sprayed with the specific material The environmental problems associated

with inorganic surface treatment include the release of heavy metals and acids into the wastestreams

Chromating is a process which uses hexavalent chromium and proper pH control to deposit a protective film on metal surfaces This process works well on a variety of metals and alloys The film is usually deposited through immersion and requires a high degree of preliminary surface cleaning to prevent imperfections in the film The chromate film is resistant to dissolution in water thus forming a mechanical barrier which resists corrosion The equipment used in chromating is relatively inexpensive however the process releases high levels of hexavalent chromium and acids into the wastestream

Phosphating is the treatment of a metallic surface with a dilute solution of phosphoric acid plus other reagents to produce a conversion coating containing insoluble crystalline phosphate Phosphate coatings are obtained by immersion or spray application and are relatively inexpensive and easy to produce These coatings impart corrosion resistance to the surface and provide a good base for paints and other organic coatings The phosphating operation is usually preceded by a cleaning step to insure that the surface is free of soils and to foster proper coverage and adhesion of the coating The phosphating operation is generally followed by a chromic acid rinse The waste severity of this process is less than with chromating but heavy metals and acids are still discharged to the effluent

3 1 1 2 Metal Finishing Metal finishing processes are used to impart a broad range of attributes to the parts such as abrasion corrosion and wear resistance and improved frictional characteristic and appearance Metal finishing processes include electroplating electroless plating anodizing and dip galvanizing

Electroplating is one of the most widely used processes for the production of protective and decorative metal coatings It involves the electrodeposition on the workpiece (cathode) of the metal ions which are carried by the electrolyte This reaction is driven by passing a direct current through the bath and achieves the formation of an adherent coating on the workpiece

The formation of the protective coating in electroless plating is achieved through the autocatalytic or chemical reduction of metallic ions which are contained in the process solution Since this process is not driven by an external electric current it offers advantages over electroplating for certain applications -- e g uniform surface coating thickness regardless of the part s configuration

Both electrolytic and electroless plating processes typically require a high degree of surface preparation and generate hazardous waste

Anodizing processes form a stable film on metal surfaces which provides corrosion protection decorative surfaces or a base for paint or other coatings Anodizing is an electrolytic oxidation

process by which the surface of the metal is converted into an insoluble oxide layer that has desirable chemical and physical properties

Dip/galvanized coatings are applied primarily to iron and steel to protect the base metal from corrosion During the dipping process the part is immersed in a molten metal bath commonly composed of zinc compounds The metal parts must be free of grease oil lubricants and other surface contaminants prior to the coating process Operating difficulty and equipment cost are low which makes dipping an attractive coating process for most industrial applications However dipping does not always provide a high-quality finish

3 1 2 Waste Description

Wastewater solid waste and air emissions are generated by the metal finishing process

Wastewater includes

- Industrial wastewater rinse water, cooling water, steam condensate, boiler blowdown wash water, and exhaust scrubber solution
- Spent plating baths contaminated or spent electroplating or electroless plating baths
- Spent process baths etchants and cleaners that are contaminated or spent
- Strip and pickle baths nitric sulfuric, hydrochloric and hydrofluoric acids used to strip metals from workpiece racks or parts
- Exhaust/scrubber solutions solutions collected in exhaust and air emission control devices

Solid waste includes

- Sludge form the treatment of industrial wastewater sludge containing metals such as cadmium copper chromium nickel tin and zinc
- Miscellaneous solid wastes absorbents filters, empty containers aisle grates, and abrasive blasting residues
- Solvents spent and contaminated degreasing solvents

Air emissions include

- Vapors from degreasing and solvent cleaning
- Mists from chromium plating operations

Most of the waste from metal finishing operations is generated in the rinsing step Generally discarded rinse waters contain low concentrations of the process chemicals that were carried with the workpiece into the rinse bath (drag-out) Typically the treatment of rinse waters produces a metal hydroxide sludge that can be a hazardous waste

After use spent baths may be stored in a suitable container for future treatment disposal or recycling To determine the potential for modifying the bath's operating parameters or recycling or reusing the bath, its chemical and physical characteristics must first be quantified The characteristics establish the potential for the baths reuse or value to a recycler

Additional potential waste hazards in the metal finishing industry include vapors and mists emitted from process baths, spills, and samples Vapors and mists are usually controlled by exhaust systems that must be equipped with mist collection and scrubbing systems to meet air emission regulations Spills, if they are common, can contribute significantly to the volume of waste Documenting their occurrence will provide valuable historical information for identifying the maintenance or operational changes that are necessary to reduce their frequency Samples of plating solutions provided by vendors that are not intended for use also contribute to the waste generated by the metal finishing industry These samples often accumulate without concern for violating any waste storage time requirements However these samples must eventually be returned or disposed of Outdated chemicals are additional examples of waste not typically attributed directly to the production process Additional processing waste includes the filter elements from filtration units empty process solution containers abrasive blasting residues and waste from housekeeping activities Exhibit 3-2 is a summary of the waste generated by the metal finishing industry

Exhibit 3-2
Summary Table of Metal Finishing Industry Waste

Waste	Potential Hazards	Waste Stream	Process
Alkali (hydroxide)	Corrosivity	Wastewater	Cleaning etching
Acid (nitric sulfuric hydrochloric hydrofluoric	Corrosivity	Wastewater	Cleaning pickling etching bright dipping
Surfactants	Aquatic toxicity	Wastewater	Cleaning
Oil and Grease	Aquatic toxicity	Wastewater spent solvent	Cleaning

Waste	Potential Hazards	Waste Stream	Process
Cadmium Zinc Nickel Copper Other Metals	Toxicity	Plating bath drag out rinse water spent filters sludge	Plating
Perchloroethylene Trichloroethylene Other Solvents	Inhalation dermal	Spent solvent (liquid or sludge) air emissions	Cleaning
Cyanide	Toxicity	Plating bath drag out rinse water other wastewaters	Plating tumbling stripping heat treating desmutting
Chromates	Toxicity	Plating bath drag out rinse water sludge other wastewater mist	Plating chromating etching
Water	-	Rinse water drag out process bath air emission (evaporation) cooling water boiler blowdown	Various

3 2 POLLUTION PREVENTION STRATEGIES

3 2 1 Introduction

The specific approaches recommended for pollution prevention in metal finishing facilities include source reduction recycling & resource recovery, and the use of replacement technologies Source reduction practices are designed to reduce the volume of waste initially generated In recycling and resource recovery waste is used as a raw material for the same or another process or valuable materials are recovered from a waste stream before the waste is disposed of Replacement technologies generate less pollution and provide therefore a more environmentally sound alternative to the standard metal finishing processes

This section provides detailed information on these three approaches

3 2 2 Source Reduction

Source reduction approaches decrease the amount of waste generated at the source Many source reduction options require only simple housekeeping changes or minor in-plant process modifications Source reduction opportunities for process baths and rinse systems and improved housekeeping methods for achieving source reduction are discussed below

3 2 2 1 Process Baths At the level of the process baths source reduction can be achieved through material substitution bath life extension and drag-out reduction

Material Substitution In the U S pollution control regulations have provided the incentive for using less toxic process chemicals and chemical manufacturers are gradually introducing such substitutes Eliminating process materials such as hexavalent chromium and cyanide-bearing cleaners and deoxidizers eliminates the need to detoxify these wastes It is particularly desirable to eliminate processes employing hexavalent chromium and cyanide since special equipment is needed to detoxify both

Because there can be disadvantages in substituting one process chemical for another the following questions should be asked

- Is the specific coating needed?
- Are substitutes available and practical?
- Will substitution solve one problem but create another?
- Will tighter chemical controls be required of the bath?
- Will product quality or production rate be affected?
- Will the change involve any cost increases or decreases?

Most opportunities to reduce waste by replacing materials require modifying the chemistry of process baths or replacing the chemicals used for a particular process

Purified Water Deionized distilled or reverse osmosis water can be used instead of tap water for process bath makeup and rinsing Natural contaminants such as calcium iron magnesium manganese chlorine carbonates and phosphates (found in tap water) reduce rinse water efficiency interfere with drag-out recovery and increase the frequency of process bath dumping These contaminants also contribute to sludge volume when they are removed from wastewater during treatment

Hexavalent Chromium Alternatives Trivalent chromium plating solutions can be used for decorative chromium plating to replace hexavalent chromium In so doing drag-out is decreased because trivalent chromium plating baths operate with a lower viscosity and lower concentration than do hexavalent baths The use of trivalent chromium also eliminates an extra treatment step necessary to reduce the chromium from the hexavalent to trivalent state before precipitation In addition using trivalent chromium eliminates the problems associated with hexavalent chromium bath misting as well as hexavalent chromium fugitive emissions in air scrubbers However trivalent chromium is not presently available for hard chromium plating Other chromium alternatives include sulfuric acid and hydrogen peroxide (for chromic acid pickles deoxidizers and bright dips) and benzotriazole (0 1 to 1 0 percent solution in methanol)

or water-based proprietaries (for chromium based anti-tarnish) The latter two alternatives are extremely reactive and require ventilation

Nonchelated Process Chemicals Chelators are used in chemical process baths to control the concentration of free metal ions in the solution They are usually found in baths used for metal etching cleaning and electroless plating When chelating compounds enter the waste stream they inhibit the precipitation of metals so that additional treatment chemicals must be used and these treatment chemicals may end up in the sludge and contribute to the volume of hazardous waste For example when ferrous sulfate a popular precipitant is used to precipitate metals from chelated complexes the precipitant adds significantly to sludge volume For some applications the ferrous sulfate is added in large amounts at an 8-to-1 ratio to the contaminant metals If spent process baths containing chelators cannot be treated on site they must be containerized for off-site treatment or disposal which increases waste disposal costs

Several chelators are used in metal finishing industry processes In general mild chelators such as phosphates and silicates are used for cleaning and etching processes, whereas electroless plating baths are typically chelated with stronger chelating compounds (citric acid maleic acid and oxalic acid) Ethylenediaminetetraacetic acid (EDTA) is also used but with less frequency than the others It should be noted, however, that while chelators help extend bath life chelated process chemicals in wastewater must be removed to required discharge levels Often the pH of waste streams must be adjusted to break down the metal complexes that chelators form EDTA, for example, requires lowering the pH below 3 0 to break the complex and allow subsequent metal precipitation at high pH

Nonchelated process chemistries can be used for some processes (e g all saline cleaning and etching) in which it may not be necessary to keep the metals removed from workpiece surfaces in solution In these cases the metals can be allowed to precipitate and the process bath can be filtered to remove the solids Note however that for electroless plating it is less feasible to use nonchelated chemistries because the chelators play a significant role in the chemical processes that allow the plating bath to function

Nonchelated process cleaning baths usually require continuous filtration to remove the solids that form These systems generally have a 1- to 5-micron filter with a pump that can filter the tank s contents once or twice each hour The cost of a filter system ranges from approximately $400 to $1 000 for each tank and in addition to purchase and setup costs, costs will be incurred for filter element replacement disposal and maintenance

Savings however will be realized in reduced waste treatment and sludge handling costs and reduced disposal costs for spent baths Another important advantage of nonchelated process chemicals is that the metal-removal procedure during wastewater treatment is usually improved Therefore the treated effluent is more likely to meet discharge requirements

Noncyanide Process Chemicals An alkaline chlorination process requiring sodium hypochlorite or chlorine is typically used to treat waste streams containing free cyanide If complex cyanides are to be treated ferrous sulfate precipitation is commonly used These chemicals contribute to sludge volume Therefore using noncyanide process chemistries may reduce hazardous waste sludge by eliminating a treatment step However many noncyanide processes are difficult to treat and produce more sludge than cyanide baths The following paragraphs provide examples and include advantages and disadvantages of each The user should weigh the advantages and disadvantages for specific applications

The waste water treatment savings will depend on the cyanide treatment method and the volume of waste Cyanide is typically oxidized with sodium or calcium hypochlorite These chemicals cost approximately $1 50 per gallon of solution for sodium hypochlorite and approximately $1 85 per pound for calcium hypochlorite powder Assuming that a facility treats 500 gallons of dilute cyanide waste (100 mg/l) each day, treatment costs could be approximately $15 to $20 per day or $300 to $400 per month (not including subsequent metal precipitation and sludge disposal)

The use of noncyanide plating baths could eliminate or reduce this cost For a 2 gal/min rinse water flow using noncyanide baths means a savings of about $12 000 in equipment costs and $3 00/lb in cyanide treatment chemical costs (In this case treatment chemicals cost about four times as much as raw sodium cyanide cleaner)

Alternatives to cyanide cleaners include trisodium-phosphate or ammonia both provide good degreasing when used hot in an ultrasonic bath However they are highly basic and may complex with soluble metals if used as an intermediate rinse between plating baths where metal ions may be dragged into the cleaner

Alternatives to cyanide plating bath chemistries are also available Acid tin chloride for example works faster and better than tin cyanide In contrast to a heavy copper cyanide plating bath copper sulfate baths are highly conductive and have a simple chemistry Sulfate baths are economical to prepare operate and treat Previous sulfate bath problems have been overcome with new formulations and additives The copper cyanide strike may still be needed for steel zinc or tin-lead base metals One disadvantage of alternatives to cyanide plating bath chemistries is that noncyanide chemistries often cost more than conventional cyanide baths

Alkaline Cleaners A variety of chlorinated and nonchlorinated solvents are used to degrease workpieces before they are processed These solvents can be either recycled on site ore transported off site for recycling or disposal On-site recycling generates a solvent sludge that is disposed of off site However using hot alkaline cleaning baths instead of solvents permits the baths to be treated on site and discharged to certain publicly owned treatment works and less sludge is generated than by solvent degreasing The effectiveness of alkaline cleaners can be

enhanced by applying an electrocurrent a periodic reverse current or ultrasonics The benefits of avoiding solvent vapors and sludges often outweigh any additional operating costs

A 150-gallon tank to hold the alkaline cleaning solution will cost approximately $400 tank installation a heating system ventilation and an oil separation system would increase the cost to an estimated $6 000 The cost of chemicals depends on the type of cleaners used and the frequency of replacement Typically alkaline cleaners cost less than degreasing solvents A standard degreasing solvent costs between $6 and $13 per gallon or $300 to $700 to fill a 50-gallon degreasing tank whereas a 150-gallon alkaline cleaning bath (using sodium hydroxide) costs $150 to $200 However the life of an alkaline cleaning bath typically is shorter than that of a solvent degreasing solution a 50-gallon tank of solvent degreaser can last up to 6 months whereas a 150-gallon replacement of alkaline cleaner usually lasts 3 months under similar operating conditions or longer than 3 months with bath maintenance and filtration

Disposing of a 55-gallon drum of spent solvent can cost from $300 to $1 200, depending on the type of solvent and number of drums Therefore, if a facility can treat 300 gallons of spent alkaline solution on site using pH adjustment and metal removal (150-gallon bath replaced every 3 months) and dispose of the resultant sludge for less than the cost of solvent disposal, it would be economically feasible to replace a degreasing solvent with an alkaline cleaner

Alternative Cleaners Biodegradable cleaners may be acceptable for discharge to public sewers However the oxygen demand created by the cleaners during treatment and disposal of the bath may slightly increase sewer fees Nonphosphate cleaners may help reduce waste by eliminating the generation of phosphate sludges during wastewater treatment These and other alternative cleaners should be tested to determine their effectiveness

Bath Life Extension When baths become spent they are either taken off line and treated on site or are placed in containers for off-site disposal Waste volume and bath replacement costs can be decreased through filtration replenishment electrolytic dummying (i e using a low current to plate out contaminants) precipitation monitoring housekeeping, drag-in reduction purer anodes and bags and ventilation/exhaust systems These methods of extending bath life are described below

Filtration Filtration systems remove accumulated solids that reduce the effectiveness of the process bath operations Continuous filtration of the bath removes these contaminants thereby extending the life of the bath Many acidic electroplating baths (e g acid copper sulfate acid zinc nickel sulfonate nickel chloride) are already filtered for reasons of quality For other electroplating baths filtration may not extend bath life significantly Note that replacing the filter media generates a solid waste that adds to the operating costs, these costs need to be considered before installing a filter However some filters use a cleanable and reusable filter media which may help alleviate expense and waste from disposal of the filter element

Replenishment The effectiveness of a cleaning bath decreases with use Instead of disposing of the entire bath part of it can be retained and replenished with fresh chemicals and water Over time the concentration of contaminants in the bath increases and eventually it becomes more expensive to add chemicals than to replace the entire bath with a new solution At this point the bath should be disposed of

Replenishing reduces drag-out in the early life of the bath but ultimately increases the concentrations of chemicals in spent solutions when the bath must be replaced Although this approach does not ultimately reduce drag-out it is still justifiable on the basis of quality control and waste reduction

There are various automated bath monitoring and replenishing systems now available to help extend bath life Operators can use data generated by bath monitoring systems to manually adjust and maintain process bath characteristics such as pH chemical concentration and metal content within specifications to improve product quality and to extend bath life Both replenishing and adjusting can also be done using automated systems

Electrolytic Dummying Metal contaminants (such as copper) introduced into plating baths with workpieces degrade the effectiveness of the plating process In zinc and nickel baths copper can be removed by a process called dummying The process is based on the electrolytic principle that copper can be plated at a low electrical current When the copper content becomes too high an electrolytic panel is placed in the process bath A trickle current ' is run through the system usually at a density of 1 to 2 amperes per square foot At this current the copper in the bath solution plates out on the panel but the plating bath additives (such as brighteners) are unaffected While some of the plating metals (zinc nickel) are inadvertently removed the savings realized by extending bath life justifies the slight metal loss

Precipitation Metals such as lead and cadmium enter the bath as impurities in anodes and can be removed from certain plating baths by precipitation For a zinc cyanide bath zinc sulfide can be added to precipitate lead and cadmium and the precipitant can then be removed by filtration As with all chemical reactions care must be taken to ensure that precipitating reagents are compatible with bath constituents In addition iron and chromium contamination is common in acidic nickel baths In most solution formulations these metals can be removed with peroxide combined with pH elevation and bath filtration

Monitoring The key to determining the need for added chemicals or removal of contaminants and hence extending the life of process bath is the continuous analysis of bath parameters e g pH and metal content In addition a thorough understanding of the effect of contaminants on the production process is a critical part of reducing waste as well as the number of rejected parts that must be stripped and replated Monitoring must be treated as an ongoing process not an event

Housekeeping Preventing foreign material from entering or remaining in a bath prolongs its life When a part falls off the rack into a bath it should be removed to reduce contamination of the bath The racks should also be kept clean and free of contaminating material Other waste minimization measures include protecting anode bars from corrosion using corrosion-resistant tanks and equipment and filtering incoming air to reduce airborne contaminants

Drag-In Reduction Liquids clinging to workpieces from preceding baths can shorten useful life and reduce effectiveness of subsequent baths Rinsing helps prevent cross-contamination between baths by rinsing the drag-out from one process bath before the item is processed in another

Purer Anodes and Bags Impurities contained in anodes will contaminate a process bath Pure anodes do not contribute to bath contamination but may cost more than other less-pure anodes Cloth bags around anodes prevent insoluble impurities from entering a bath However, the bags need to be maintained and must be compatible with the process solution

Ventilation/Exhaust Systems Scrubbers demisters, and condensate traps remove entrained droplets and vapors from the air passing through ventilation and exhaust systems If segregated some wastes from scrubbers can be returned to process baths after filtering Updraft ventilation allows mist to be collected in the ductwork and flow back to the process tank For example hard chromium plating baths would benefit from an updraft ventilation system

Process baths that generate mist (e g hexavalent chromium plating baths air-agitated nickel/ copper baths etc) should be in tanks with more freeboard to reduce the amount of mist reaching the ventilation system That is the added space at the top of the tank allows the mist of return to the bath before it is entrained with the air entering the exhaust system Foam blankets or floating polypropylene balls can also be used in hard or decorative chromium baths to keep mists from reaching the exhaust system

Drag-out Reduction Several factors contribute to drag-out including workpiece size and shape viscosity and chemical concentration surface tension and temperature of the process solution By reducing the volume of drag-out that enters the rinse water system valuable process chemicals can be prevented from reaching the rinse water thereby reducing sludge generation The techniques available to reduce process chemical drag-out include

- Minimizing bath chemical concentrations by maintaining chemistry at the lower end of operating range
- Maximizing bath operating temperature to lower the solution viscosity
- Using wetting agents in the process bath to reduce the surface tension of the solution

- Maintaining racking orientations to achieve the best draining
- Withdrawing workpieces at slower rates and allowing sufficient solution draining before rinsing
- Using air knives above process tanks
- Using a spray or fog rinse above process tanks
- Avoiding plating bath contamination
- Using drain boards between process and rinse tanks to route drippings back to process tanks
- Using drag-out tanks to recover chemicals for reuse in process baths

A few of these drag-out reduction techniques require little if any capital investment, however they do require training For example, removing workpiece racks at a slower rate or allowing the rack to drain over the process tank for a longer time requires a conscientious operator These procedures should not significantly affect production and should result in reducing process chemical purchases water and sewer use fees, treatment chemical purchases, and sludge handling costs

Other drag-out reduction techniques require some capital expenditure Drip bars can be installed above hand-operated process tanks to allow drag-out from workpiece racks to drain back into the process tank If PVC piping is used and installation is performed by plant personnel this option should cost no more than a few hundred dollars for five to eight tanks

Process Bath Operating Concentration Drag-out can be reduced by keeping the chemical concentration of the process bath at the lowest acceptable operating level Generally the greater the concentration of chemicals in a solution the greater the viscosity As a result the film that adheres to the workpiece as it is removed from the process bath is thicker and will not drain back into the process bath as quickly This phenomenon increases the volume as well as the chemical concentration of the drag-out solution

Chemical product manufacturers may recommend an operating concentration that is higher than necessary Metal finishers should therefore determine the lowest process bath concentration that will provide adequate product quality This can be accomplished by mixing a new process bath at a slightly lower concentration than is normally used As the process bath is replenished the chemical concentration can continue to be reduced until product quality begins to be affected At this point the process bath that provides adequate product quality at the lowest possible chemical concentration is identified Alternatively the new bath can be mixed at a low concentration and

the concentration can be gradually increased until the bath adequately cleans etches or plates the test workpieces Fresh process baths can often be operated at lower concentrations than used baths Makeup chemicals can be added to the used bath to gradually increase the concentration to maintain effective operation

Process Bath Operating Temperature Higher temperature baths reduce the viscosity of the process solution which enables the chemical solution to drain from the workpiece faster thereby reducing drag-out loss However very high temperatures should be avoided because brighteners break down in most plating solutions and in cyanide solutions carbonate buildup increases High temperatures may also cause the process solution to dry onto the workpiece as it is removed increasing drag-out Operating process baths at higher temperatures will also increase the evaporation rate from the process tank To retain some of the advantages of higher temperature baths water or process solution from a rinse tank can be added to replenish the process bath and to maintain the proper chemical equilibrium Deionized water should be used to minimize natural contaminant buildup (such as calcium iron magnesium, carbonates and phosphates) in the process bath

Wetting Agents Adding wetting agents to a process bath reduces the surface tension of a solution and as a result, can reduce drag-out loss by as much as 50 percent However, wetting agents can create foaming problems in process baths and may not be compatible with waste treatment systems For these reasons, impacts at both the process bath and the treatment system should be evaluated before using wetting agents

Workpiece Positioning Drag-out loss can be reduced by properly positioning the workpiece on the rack Workpieces should be oriented so that chemical solutions can drain freely and not get trapped in grooves or cavities Following are suggestions for orienting and positioning workpieces

- Parts should be tilted so that drainage is consolidated The part should be twisted or turned so that fluid will flow together and off the part by the quickest route
- Avoid where possible positioning parts directly over one another
- Tip parts to avoid table-like surfaces and pockets where solution will be trapped
- Position parts so that only a small surface area comes in contact with the solution surface as it is removed from the process bath

Withdrawal and Drain Time The faster an item is removed from the process bath the thicker the film on the workpiece surface and the greater the drag-out volume The effect is so significant that it is believed that most of the time allowed for draining a rack should instead be used for withdrawal only At plants that operate automatic hoist lines personnel should adjust

the hoist to remove the workpiece racks at the slowest possible rate However when workpieces are removed from a process bath manually it is difficult to control the speed at which they are withdrawn Nevertheless supervisors and managers should emphasize to process line operators that workpieces should be withdrawn slowly

The time allowed for draining can be inadequate if the operator is rushed to remove the workpiece rack from the process bath and place it in the rinse tank However a bar or rail (drip bar) above the process tank may help ensure adequate drain time prior to rinsing If drip bars are used employees can work on more than one process line or handle more than one rack during operation The practice termed rotation plating allows an operator to remove a rack from a plating bath and let it drain above the process tank while other racks are handled Although increased drain time can have some negative effects due to drying, some baths (such as cleaners) are not affected The operator can return after draining is completed to begin the rinsing stage

Air Knives Air knives can be used above process tanks to improve draining As the workpiece rack is raised from the process tank, air is blown onto the surface of the workpieces to improve drag-out solution draining into the process bath High humidity air can counteract workpiece drying

Spray or Fog Rinses Spray or fog rinse systems can be used above heated baths to recover drag-out solution If the spray rinse flow rate can be adjusted to equal the evaporation loss rate the spray rinse solution can be used to replenish the process bath Purified water should be used for the spray systems when possible to reduce the possibility of contamination entering the bath with the spray rinse water

Plating Baths Contaminated plating baths (for example a cyanide plating bath contaminated with carbonate) increase drag-out by as much as 50 percent because of the increase in solution viscosity Excess impurities also make application of recovery techniques difficult if not impractical Therefore efforts should be made to reduce the level of impurities in the bath (e g by carbonate removal in cyanide baths)

Drain Boards Drain boards capture process chemicals that drip from the workpiece rack as it is moved from the process bath to the rinse system The board is mounted at an angle that allows the chemical solution to drain back into the process bath Drain boards should cover the space between the process bath tank and the rinse tank This prevents chemical solutions from dripping onto the floor Removable drain boards are desirable because they permit access to plumbing and pumps between tanks

Drag-out Tanks (dead or static rinse tanks) Process chemicals that adhere to the workpiece can be captured in drag-out tanks and returned to the process bath Drag-out tanks are essentially rinse tanks that operate without a continuous flow of feed water The workpiece is placed in the drag-out tank before the standard rinsing operation Chemical concentrations in the

drag-out tanks increase as workpieces are passed through Since there is no feed water flow to agitate the rinse water air agitation is often used to enhance rinsing Eventually the chemical concentration of the drag-out tank solution will increase to the point where it can be used to replenish the process bath Drag-out tanks are primarily used with process baths that operate at an elevated temperature Adding the drag-out tank solution back to the process bath compensates for evaporative losses that occur due to high temperature

Deionized water should be used for drag-out tanks so that natural contaminants in tap water do not build up in the process baths when drag-out solutions are used to replenish them Contamination as a result of using the tank to rinse a workpiece from another process line must also be avoided Further adding drag-out solution to some process bath chemistries (for example electroless copper baths) can adversely affect the bath Often, a pretreatment step is required to remove contaminants prior to adding the recovered drag-out solution back to the process bath

Generally, a drag-out tank can reduce both rinse water use and chemical loss by 50 percent or more Assuming that a chemical bath loses approximately 2 gallons of drag-out each day, the total volume of drag-out loss each month would be 40 gallons, based on 20 work days per month If the rinse system following the process bath operates at a flow rate of 5 gallons per minute for a total of 4 hours each day water usage would be 24 000 gallons per month based on 20 work days per month The savings in operation expenses are for (1) raw materials/ chemicals, (2) water and sewer fees and (3) treatment chemicals and sludge disposal Reducing drag-out and rinse water use by 50 percent would reduce chemical losses by 20 gallons per month and water usage by 12 000 gallons if rinse water reduction is proportional to drag-out reduction If water and sewer fees are each $0 50 per 100 cubic feet, 16 dollars per month could be saved Sludge reduction and raw material/chemical reduction would increase savings significantly The solution collected in the drag-out tank must be returned to the process bath when the concentration of the solution reaches the correct level If it is returned at too low a concentration it can dilute the operating bath If the concentration of chemicals in the drag-out tank gets too high (approaching bath concentration) however the drag-out rinse becomes ineffective

Savings for chemicals depends on the type of process chemical and the amount of drag-out returned to the process tank The cost for process bath chemicals could range from less than $1 to over $20 At the low end the savings for process chemicals would be $20 per month whereas at the high end the savings would be $400 per month or higher

A savings in the cost for treatment chemicals would also be realized by reducing rinse water effluent If a company spends approximately $1 500 each month on chemicals to treat 200 000 gallons of water reducing wastewater by 12 000 gallons could reduce the use of treatment chemicals by $90 each month This assumes the company generates approximately 10 000 gallons of wastewater per day and uses standard pH adjustment metal precipitation and

flocculation treatment reagents Reducing the amount of sludge requiring disposal will add to the savings

The cost of a drag-out tank depends on the size of the tank Since these tanks are not used as flow-through tanks they can be set up without any plumbing Typically drag-out solutions are added back to the process bath manually but automation because it maintains the best concentration in the drag-out tank is more efficient Technologies available to recycle process chemicals from drag-out tanks and rinse water effluent are discussed under Recycling and Resource Recovery

3 2 2 2 Rinse Systems Most hazardous waste from a metal finishing plant comes from wastewater generated by the rinsing operations that follow cleaning, plating, and stripping operations The savings associated with reducing rinse water use are primarily from reduced water sewer, and sludge disposal fees By increasing rinse efficiency a process line can reduce wastewater flow by as much as 90 percent Improved rinse efficiency should also reduce treatment chemical use and sludge generation

If a company spends approximately $400 each month for water and sewer fees a modest reduction in rinse water usage of 10 percent can theoretically, save the company $40 each month If a 2-year payback on investment is acceptable the company could justify spending approximately $1 000 to reduce its rinse water usage This could be spent on rinse tank agitators and flow restrictors If greater reductions are achievable (perhaps 50 percent) a company could justify more advanced technologies such as meters controlling rinse water flow or counter-current rinse systems Reducing the volume of wastewater requiring treatment can also reduce sludge disposal costs and treatment chemical use which will contribute to the payback on investment

Drag-out is the most significant source of process chemical loss Treating rinse water containing these process chemicals generates hazardous waste because of the resulting sludge The volume of sludge generated is proportional to the level of contamination in the spent rinse water

Exhibit 3-3 illustrates the relationship between metal concentration in rinse water and sludge volume The graph shows the percentage of sludge generated per volume of water treated at various levels of heavy metal concentration As shown in the graph 1 000 gallons of wastewater with a heavy metal concentration of 100 mg/l will produce approximately 90 gallons of sludge If the same volume of wastewater had a metal concentration of 500 mg/l (five times the first example) approximately 280 gallons of sludge would be generated not even three times the first example This information indicates that treating a more concentrated waste stream results in less sludge volume

Exhibit 3-3
Sludge Volume Generation

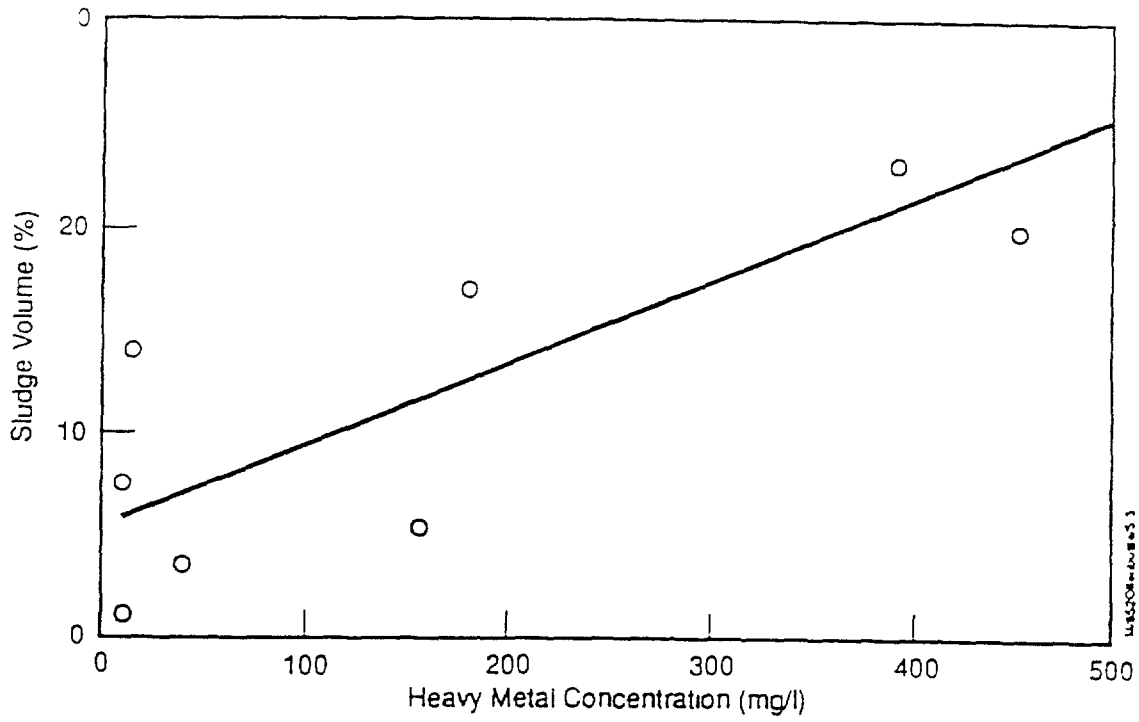

Reducing the volume of rinse water containing process chemicals will reduce the resultant sludge even if the total weight of the process chemicals remains constant Two techniques available for reducing rinse water volume are improved rinse efficiency and rinse water flow control

Improved Rinse Efficiency The following three strategies can be used to enhance rinsing between various process bath operations (1) turbulence between the workpiece and the rinse water (2) increased contact time between the workpiece and the rinse water and (3) increased volume of water during contact time to reduce the concentration of chemicals rinsed from the workpiece surface The third strategy however requires finishers to use significantly more rinse water than is actually necessary Spray rinsing agitation increased contact time rinse elimination and counterflow multiple tank rinsing on the other hand can be used to improve the efficiency of a rinsing system and reduce the volume of rinse water

Spray Rinses and Rinse Water Agitation Turbulence which involves spray rinsing and rinse water agitation improves rinse efficiency Although spray rinsing uses between one-eighth and one-fourth the volume of water that a dip rinse uses it is not always applicable in metal finishing because the spray rinse may not reach many parts of the workpiece However spray rinsing can be combined with immersion rinsing This technique uses a spray rinse as the first rinse step after the workpieces are removed from the process tank A spray rinse removes much

of the drag-out and returns it to the process bath before the workpiece is submerged into the dip rinse tank permitting lower water flows in the rinse tank

Spray or fog rinses can be installed above heated process tanks if the volume of rinse water from the spray system is less than or equal to the volume of water lost to heat evaporation This practice allows the drag-out and the rinse solution to drain directly back into the process bath in this way the rinse solution replenishes the process bath Deionized or reverse osmosis water should be used in this type of spray rinse system

Workpieces can be agitated in the rinse water by moving the workpiece rack or creating turbulence in the water Since most metal finishing plants operate hand rack lines operators could easily move workpieces manually by agitating the hand rack Rinsing is more effective if the pieces are raised and lowered into and out of the rinse tank rather than agitating the pieces while they are submerged

The rinse water can also be agitated with forced air or water by pumping either air or water into the immersion rinse tank Air bubbles create the best turbulence for removing the chemical process solution from the workpiece surface, but misting, as the air bubbles break the surface, may cause air pollution Filtered air can be pumped into the bottom of the tank through a pipe distributor (air sparger) to agitate the rinse water An in-tank pump can also recirculate the rinse water in the tank (a process known as forced water agitation) An agitator (mixer) can be used in a rinse tank but this requires extra room in the tank to prevent parts from touching the agitator blades

Air spargers water pumps or agitators can be installed in existing rinse tanks at a modest cost The cost of installing air spargers with a blower to provide the air would be $200 to $325 for a 50-gallon tank Air blowers eliminate the air cleaners and filters needed in compressed air systems to remove oils An in-tank pump for forced water agitation can be purchased for $200 to $1 000 depending on the flow rate desired

Increased Contact Time If multiple tanks are set up in series as a counter-current rinse system water usage can be reduced and contact time between the workpiece and the rinse solution can be increased Rotation plating also increases contact time by allowing operators to leave workpiece racks in the rinse tanks while they handle other racks

Rinse Elimination The rinse between a soak cleaner and an electrocleaner may be eliminated if the two baths are compatible

Counter-Current Rinse Systems Multiple rinse tanks can be used to significantly reduce the volume of rinse water used A multistage counter-current rinse system uses up to 90 percent less rinse water than a conventional single-stage rinse system In a multistage counter-current rinse system workpiece flow moves in a direction opposite to the rinse water flow Water

exiting the first tank (the last tank in which the workpiece is immersed) becomes the feed water to the second tank This water then feeds the third tank and so on for the number of tanks in the line Exhibit 3-4 illustrates the use of a three-stage counter-current rinse system

The effectiveness of this multistage system in reducing rinse water use is illustrated in the following example A plant operates a process line where the drag-out rate is approximately 1 0 gallon per hour This process bath is followed by a single-stage rinse tank requiring a dilution rate of 1 000 to 1 to maintain acceptable rinsing Therefore the flow rate through the rinse tank is 1 000 gal/hr If a two-stage counter-current rinse system were used a rinse water flow rate of only 30 to 35 gal/hr would be needed If a three-stage counter-current rinse system were used only 8 to 12 gal/hr would be required

A multistage counter-current rinse system allows greater contact time between the workpiece and the rinse water greater diffusion of process chemicals into the rinse solution and more rinse water to come into contact with the workpiece The disadvantage of multistage counter-current rinsing is that additional tanks and work space are needed Since many metal finishers lack room to install additional rinse tanks multistage rinse systems are not always feasible One option available to a metal finishing plant that lacks floor space is to reduce the size of the rinse tanks or to segregate existing tanks into multiple compartments This option is limited, however by the size of the workpieces

Exhibit 3-4 Three-Stage Counter-Current Rinse System

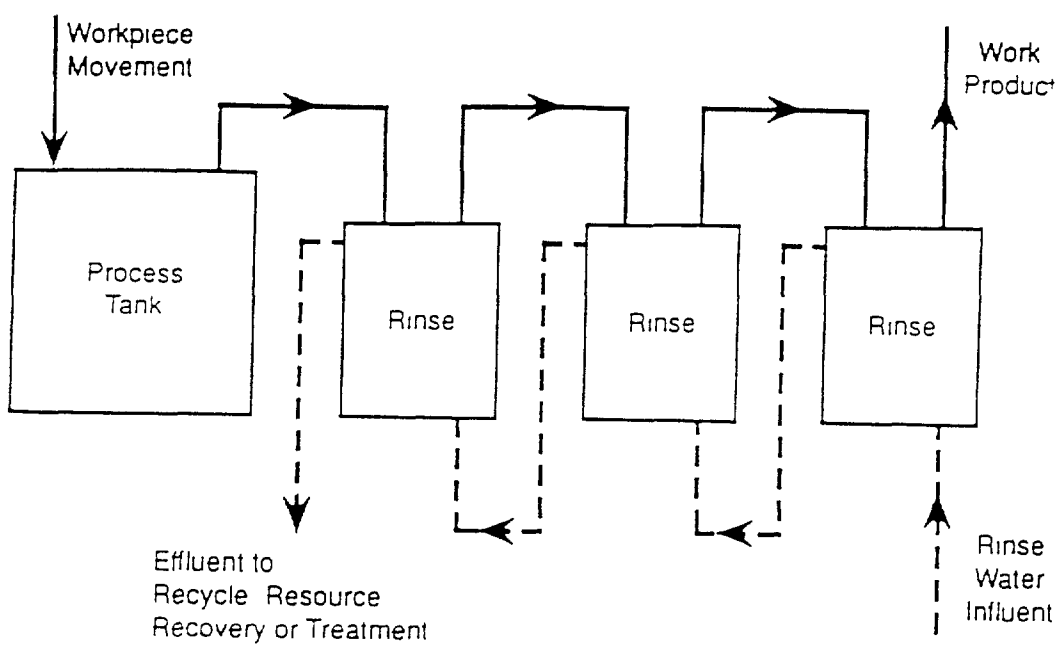

Installing a counter-current three-rinse system into an existing single-stage rinse system requires two additional rinse tanks and the associated piping The cost would depend on the size of tanks Assuming the tanks have a capacity of 450 gallons installation could run approximately $1 200

Flow Controls Rinse water is excessive if water pipes are oversized or the water is left running when the rinse tanks are not being used Rinse water control devices can increase the efficiency of a rinse water system

The cost of reducing rinse water use varies depending on the method The cost may be limited to that associated with purchasing and installing flow restrictors or timers Savings from reduced rinse water flow rates include direct reduction of water use sewer fees treatment chemical use and sludge generation

The following equation will assist in determining the most efficient rinse water flow rate for a single-stage rinse system

$$Q = D\,(C_p/C)$$

where

Q = rinse tank flow rate
D = drag-out rate
C_p = chemical concentration in the process solution
C = allowable chemical concentration in the rinse solution

The acceptable value of C is based on experience or on quality control standards

For multiple stage rinse tanks the rinse water flow rate is given by

$$Q = [(C_p/C_n)^{1/n} + 1/n]\,D$$

where

n = number of rinse tanks in series
C_n = allowable chemical concentration in the rinse solution of the nth tank

Drag-out Measurement Drag-out is the amount of process solution that remains on the part as it is carried out of the process bath and placed into the rinse bath This process solution is named drag-out for it has been 'dragged-out" of the process bath It is the cause of virtually all the contamination and pollution generated by metal finishers

The following procedure can be used to determine the drag-out rate

- Set-up a drag-out collection bath (filled with clean water) and place it next to the process bath This collection bath should be agitated

- Allow the plating or other process to proceed normally except that after removing the parts from the process bath they are immersed in the drag-out collection bath for at least one minute After being immersed in the collection bath the parts proceed to the tank that normally follows the process bath It is important that the parts used in this test be representative of the parts normally processed in this operation

- While the test is conducted the time that the operator allows for draining parts over the plating tanks should be typical of normal operation

- At the conclusion of the test, measure
  - the concentration of the metal in the process bath
  - the volume of a dead rinse tank after the test
  - and the concentration of the metal in the drag-out collection bath

  Instead of measuring the concentration of the metal ion in the process and drag-out collection baths, it is possible to use the concentration of any other solution constituent that is unaffected by dilution

The drag-out can then be calculated using the following equation

$$V_d = \frac{(C_r)\ (V_r)}{C_p}$$

where

V_d = volume of drag-out loss
V_r = volume of water in the rinse tank
C_p = chemical concentration in the process bath
C = chemical concentration in the rinse water (drag-out collection tank)

Note The units of the variables used in this equation must be compatible!
This equation assumes there was no metal in the drag-out collection tank at the start of the test (i e clean water)

The volume of drag-out loss can be divided by the surface area of the parts or by the number of parts processed to obtain the volume of drag-out per unit of production

Rinse Water Flow Rate The rinse water flow rate is the amount of water (gallons or liters per hour) used to rinse parts There are two simple ways to measure the rinse water flow

rate The first method is to take an empty container of known volume and a stopwatch and measure the time it takes for the container to be filled with water Another method is to install a flow meter in the water line

Total Water Usage The amount of water that passes through a process or area must be determined if there is interest in comparing operating costs before and after a change As mentioned before the easiest way to do this by installing a water meter at the point where the water enters the area or process Readings can be taken daily weekly or monthly depending on the level of information that is desired The time of day that readings are taken should also be recorded

Flow Restrictors Flow restrictors limit the volume of rinse water flowing through a rinse system by maintaining a constant flow of fresh water once the optimal flow rate has been determined Since most small- and medium-sized metal finishers operate batch process lines in which rinse systems are manually turned on and off at the start and finish of operations pressure-activated flow control devices, such as foot pedal activated valves or timers, can be helpful to ensure that water is not left on after the rinse operation is completed

Installing a flow restrictor upstream of all the rinse water influent lines reduces water use Setting the flow restrictor at a rate less than the flow rate required to operate all rinse tanks simultaneously requires operators to turn off the water in the unused rinse systems so the rinse systems in use will have adequate flow For example if a metal finisher operates between 20 and 24 separate rinse systems each requiring an average flow rate of 2 gallons per minute (gpm) a flow restrictor installed upstream of all the rinse water influent lines could limit total water flow to 15 gpm Therefore operators must turn off unused rinse systems to ensure that the rinse systems requiring immediate use will operate properly It is important to note that operator training and complete cooperation are required for this type of system to work Otherwise parts will not be rinsed effectively and product quality will decrease

Conductivity-Actuated Flow Controller A conductivity-actuated flow controller controls fresh water flow through a rinse system by means of a conductivity sensor that measures the level of ions in the rinse water When the ion level reaches a preset minimum the sensor activates a valve that shuts off the flow of fresh water into the rinse system When the concentration builds to the preset maximum level the sensor again activates a valve that opens to resume the flow of fresh water

Automated controls such as a conductivity-actuated flow controller to control rinse water flow can effectively reduce rinse water waste generation A conductivity meter equipped with the necessary solenoid control valve could cost approximately $700 per rinse system

Optimizing the Rinsing Process Water conservation is a major component of an effective pollution prevention program for rinse processes Water conservation should begin

with an evaluation of the current rinsing operating Knowledge of the current conditions will provide the metal finisher with a basis by which an economic analysis can be done in order to compare the potential savings gained from reducing drag-out and modifying the rinsing system One way to begin is to identify and evaluate the process line that uses the highest volume of water and in time repeat the evaluation for each of the remaining processes

3 2 2 3 Improved Housekeeping Although the contribution of improved housekeeping to overall waste minimization is difficult to quantify often simple housekeeping improvements can provide low to no cost opportunities for reducing waste A plant can reduce waste by developing inspection and maintenance schedules controlling the purchasing and handling of raw materials removing dropped parts quickly from baths keeping filters and other process equipment in good working condition and authorizing a limited number of employees to accept and test samples from chemical suppliers

Inspection and Maintenance Production, storage, and waste treatment facilities should be inspected regularly to identify leaks improperly functioning equipment and other items that may lead to waste Frequent inspections can identify problems before they become significant Items that should be inspected include piping systems filters storage tanks, defective racks air sparging systems automated flow controls and even operators production procedures (such as drain time and rinse methods)

Dropped parts and tools should be removed from process baths quickly to reduce contamination of the bath This can be aided by having rakes handy to recover dropped items Maintenance schedules should be coordinated with inspection schedules to ensure that equipment is operating at optimal efficiency

Chemical Purchasing and Handling Controlling the purchasing and handling of materials can reduce waste generation Inventorying raw materials and ensuring that containers are completely empty before new containers are opened reduced stockpiling of raw materials This practice will reduce the potential for spills and the likelihood of mixing poor process baths

In addition strict procedures should be developed for mixing chemicals Mixing procedures should be designed to minimize spills to provide correctly mixed baths and to ensure that the baths are operated at the lowest possible concentration to reduce drag-out loss Designating a limited number of personnel to handle and mix chemicals will improve the consistency of the solution formulations and will decrease waste

Sample Testing Many suppliers provide metal finishers with a variety of process chemicals for testing However if the material is not used it becomes waste and unused chemicals should not be allowed to stockpile at the site If possible metal finishers should stipulate that test samples

will be accepted only if the supplier agrees to take back leftover samples The unused portion of analytical samples taken from process baths should be returned to the process bath

3 2 3 Recycling and Resource Recovery

Recycling and resource recovery technologies either directly use waste from one process as raw material for another process or recover valuable materials from a waste stream before they are disposed Some spent chemical process baths and much rinse water can be reused for other plant processes Also process chemicals can be recovered from rinse water and sold or returned to process baths

Segregating waste streams is essential for most recycling and resource recovery technologies To reuse a waste material for another process recover valuable chemicals from a waste stream, or recycle rinse water the waste stream must be separated from other wastes that would prohibit recycling or reuse opportunities Therefore, recycling and resource recovery technologies typically will require process piping modifications and additional holding tanks to provide appropriate material segregation

3 2 3 1 Reusing Waste Material The chemical properties of a waste stream must be understood to assess the potential for reusing the waste as a raw material Although the chemical properties of a proses bath or rinse water solution may make it unacceptable for its original use the waste materials may still be valuable for other applications Metal finishers should therefore evaluate waste streams for the properties that make them useful rather than the properties that render then waste

Rinse Water One waste material reuse option common among metal finishers is multiple-use rinse waters in which the rinse water from one process is used for the rinse water of another The primary cost associated with rinse water reuse is in replumbing the rinse system Depending on the design of the rinse water reuse system storage tanks and pumps may also be needed

After rinse solutions become too contaminated for their original purpose they may be useful for other rinse processes For example effluent from a rinse system following an acid cleaning bath can sometimes be reused as influent to a rinse system following an alkaline cleaning bath If both rinse systems require the same flow rate 50 percent less rinse water would be used to operate them In addition, reusing water in this way can improve rinse efficiency by accelerating the chemical diffusion process and reducing the viscosity of the alkaline drag-out film Care must be exercised to make sure that tank materials and pipes as well as bath chemistries are compatible with the rinse solutions

Acid cleaning rinse water effluent can be used as rinse water for workpieces that have gone through a mild acid etch process Effluent from a critical or final rinse operation, which is

45

usually less contaminated than other rinse waters can be used as influent for rinse operations that do not require high rinse efficiencies Another option is using the same rinse tank to rinse parts after both acid and alkaline baths Metal finishers should evaluate the various rinse water requirements for their process lines and configure rinse systems to take advantage of rinse water reuse opportunities that do not affect product quality

Exhibit 3-5 illustrates rinse water reuse for an alkaline cleaning mild acid etch and acid cleaning line If each of the three rinse tanks is operated at the same flow rate total water use is 67 percent less when reused compared with no reuse

Implementing a system to reuse rinse water effluent from one rinse system as feed water in another rinse system costs approximately $1,000 This includes $500 for contractor labor for 1 day and $500 for materials (including piping and a three-quarter horsepower pump, which would be adequate for a typical rinse system) If the rinse systems are in the same process line and operate at the same flow rate, no storage tank capacity would be necessary

The savings associated with reusing rinse water are related to water and sewer fees treatment chemicals and sludge handling If each rinse system used 24,000 gallons of water each month, reusing rinse water from one rinse system could reduce water use by 24,000 gallons each month saving $32 per month assuming water and sewer fees are each $0 50 per 100 cubic feet Savings for treatment chemicals would be approximately $120 per month if the company spends $1,000 each month to treat 200,000 gallons of wastewater

Exhibit 3-5
Multiple Reuse of Rinse Water

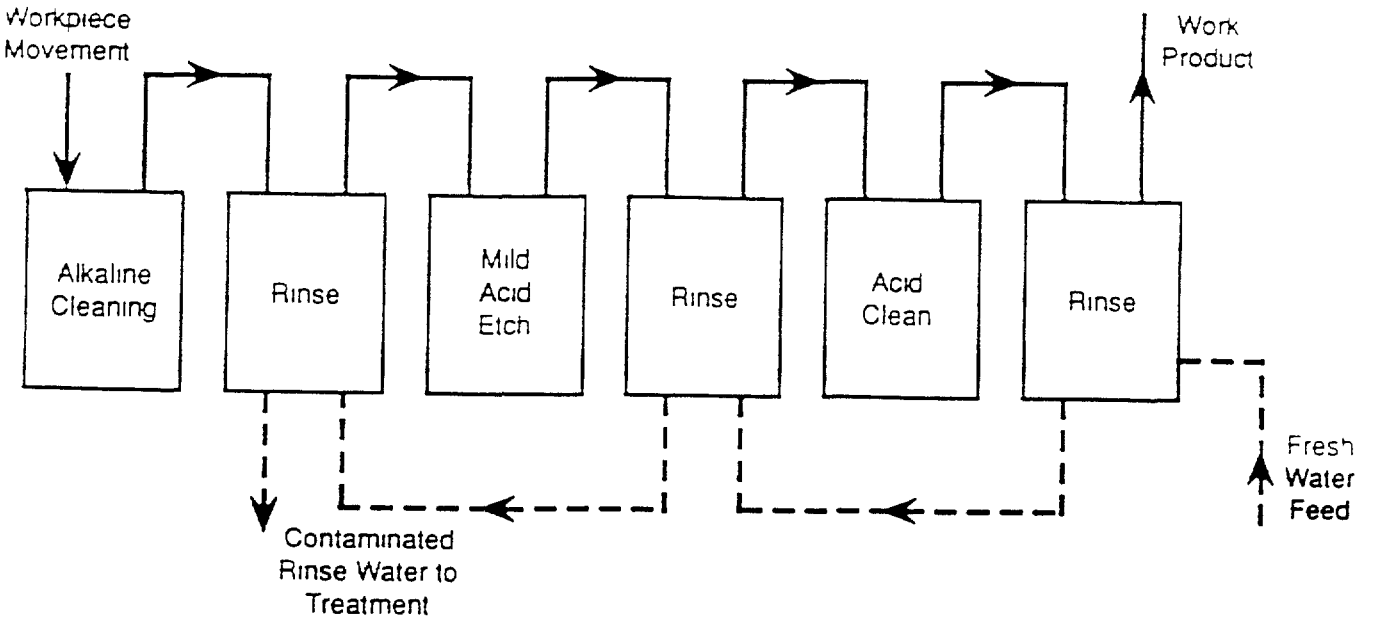

Spend Process Baths Typically acid or alkaline solutions are dumped when contaminants exceed an acceptable level However these solutions may remain sufficiently acidic or alkaline to act as pH adjusters For example alkaline solutions can be used to adjust the pH in a precipitation tank Acid solutions can be used for pH adjustment in chromium reduction treatment Since spent cleaners often contain high concentrations of metals they should not be used for final pH adjustments however It is important to make sure the process solutions are compatible before they are used in this manner

Chemical suppliers may have reclamation services some of which permit certain spent plating baths to be returned

3 2 3 2 Recycling Rinse Water and Process Baths Rinse water can be recycled in a closed loop or open loop system In a closed loop system the treated effluent is returned to the rinse system This system can significantly reduce water use and the volume of water discharged to the wastewater treatment plant A small amount of waste is still discharged from a closed loop system An open loop system allows the treated effluent to be reused in the rinse system, but the final rinse is fed by fresh water to ensure high quality rinsing Therefore some treated effluent will continue to be discharged to the sanitary sewer Exhibit 3-6 shows the configurations for both a closed loop and open loop rinse water recycling system

Exhibit 3-6 Chemical Rinse Water Recycling System

CLOSED LOOP SYSTEM

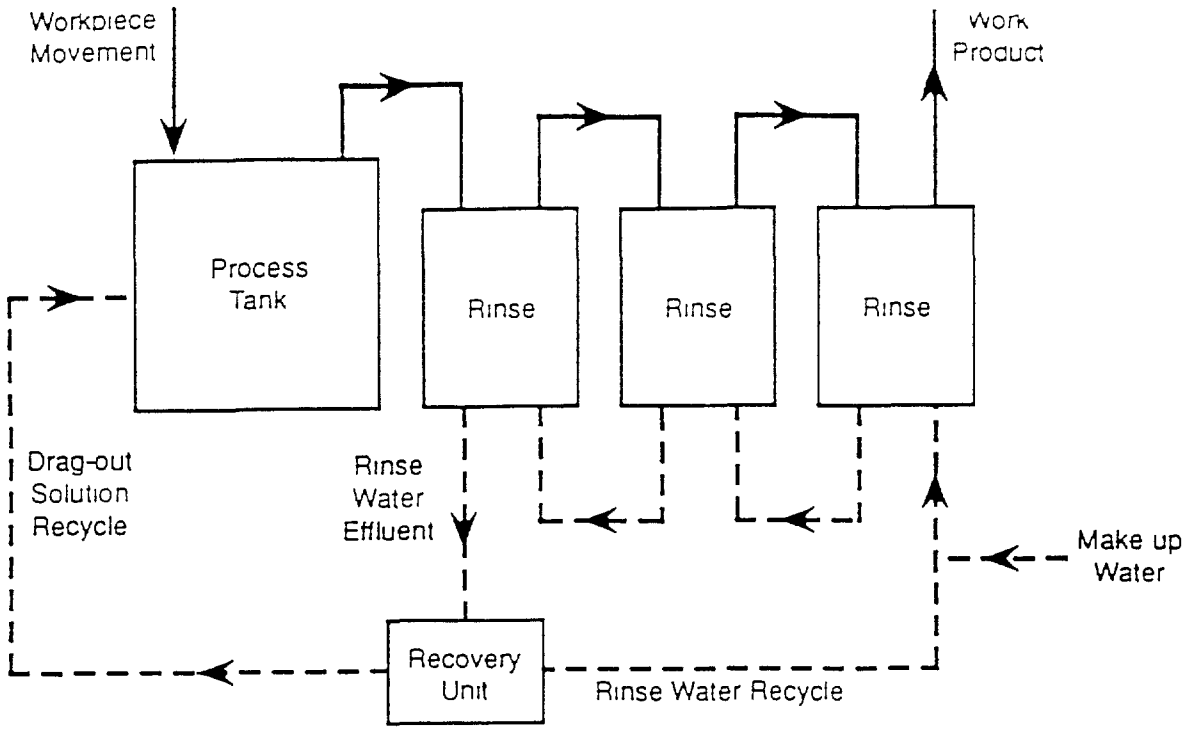

OPEN LOOP SYSTEM

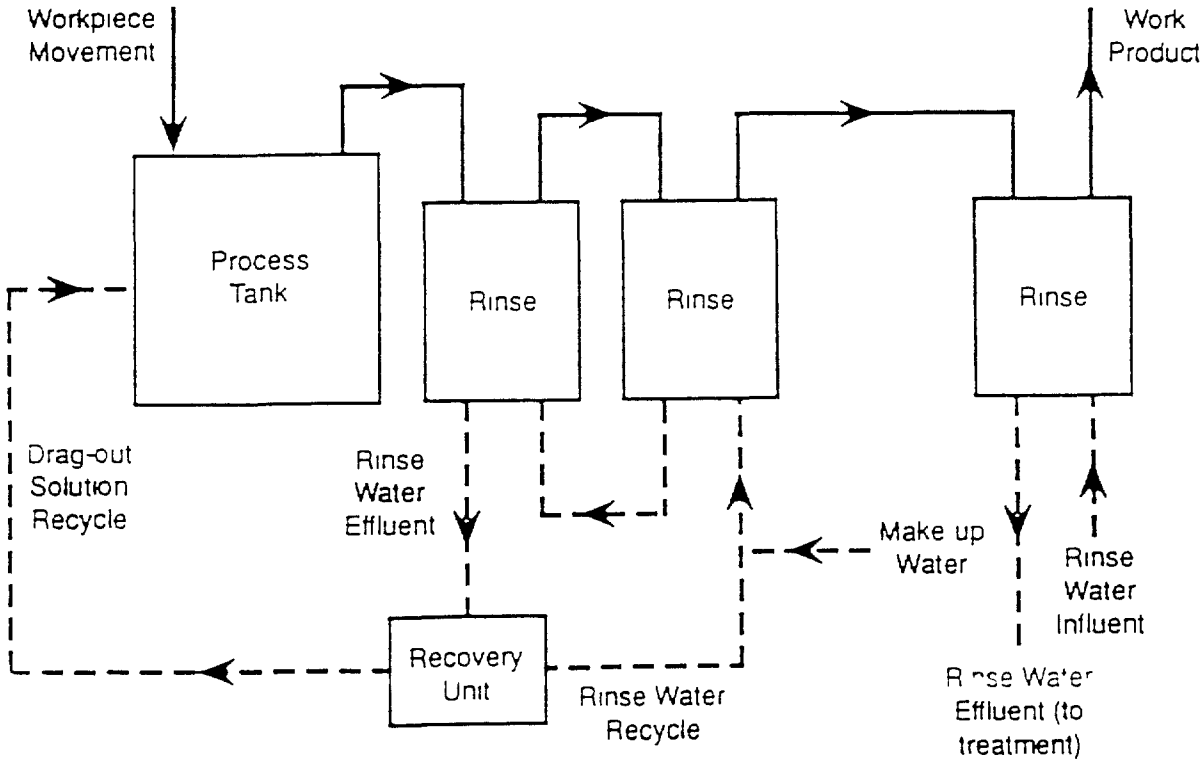

48

To improve the economic feasibility of these systems rinse water efficiency techniques should first be implemented Multistage counter-current rinse systems flow controls and drag-out reduction techniques should be pursued to reduce the volume of water requiring treatment for recovery thus reducing the equipment capital costs

In the past material recovery from metal finishing was not considered economical However effluent pretreatment regulations and treatment and disposal costs are not a significant economic factor As a result metal finishers may find it economical to reuse rinse water and to recover metals and metal salts from spent process baths and rinse water

Recovered metal can be reused in three ways (1) recovered metals (and process solutions) can be returned to baths as makeup, (2) metals can be sold or returned to suppliers, or (3) elemental metal can be sold to a reclaimer or reused on site as plating metal anode materials Some successful technologies to recover metals and metal salts include

- evaporation,
- reverse osmosis,
- ion exchange,
- electrolytic recovery (electrowinning),
- electrodialysis

These technologies are used separately or in combination to recover chemicals from rinse water effluent

The savings actually achieved through metal recovery will be site-specific Factors that determine whether metal recovery is economically justifiable include the volume of waste that contains metals the concentration of the metals the potential to reuse some of the metal salts and the treatment and disposal costs Many systems may not be economically feasible for small metal finishers because the savings may not be great enough to achieve an acceptable payback on their investment

Evaporation Evaporation has been successfully used to recover a variety of plating bath chemicals This simple technology is based on the physical separation of water from dissolved solids such as heavy metals Water is evaporated from the collected rinse water to allow the chemical concentrate to be returned to the process bath The drag-out recovered is often returned to the process tank in higher concentrations than in the original process solution Water vapor is condensed and can be reused in the rinse system The process is performed at low temperatures under a vacuum to prevent degradation of plating additives Atmospheric pressure evaporators are used most commonly because of their lower capital cost Evaporation is more economical when used with multistage counter-current rinse systems because the quantity of rinse water to be processed is small The process is energy-intensive and becomes expensive for large volumes of water heat pumps and multistage counter-current rinse systems have lower operation costs

Evaporation is most economical when the amount of water to be evaporated is small or when natural atmospheric evaporation can be used

A variation on standard evaporation technology is the cold vaporization process which works by a similar evaporation separation principle except that an increased vacuum evaporates water at temperatures of 50°F to 70°F This type of evaporation system is less energy intensive than electrically heated systems because it gets the needed heat from the air around the unit Some equipment uses the heat generated from the vacuum system to provide the heat needed for evaporation

Reverse Osmosis Reverse osmosis (RO) is a pressure-driven process in which a semipermeable membrane permits the passage of purified water under pressure greater than the normal osmotic pressure but does not allow larger molecular weight components to pass through These concentrated components can be recovered and returned to the process bath and the treated rinse water is then returned to the rinse system for reuse The most common application of RO technologies in metal finishing operations is in the recovery of drag-out from acid nickel process bath rinses Although the technology is designed to recover a concentrated drag-out solution, some materials (such as boric acid) cannot be fully recovered Also RO is a delicate process that is limited by the ability of the membranes to with stand pH extremes and long-term pressure RO membranes are not generally suitable for solutions having high oxidation potential (such as chromic acid) Also, the membranes will not completely reject many nonionized organic compounds Therefore activated carbon treatment is typically required before the rinse water solution can be returned to the rinse system Activated carbon can be costly but for certain cases it may be the only practical approach

Ion Exchange Ion exchange (IX) can be used to recover drag-out from a dilute rinse solution The chemical solution is passed through a series of resin beds that selectively remove cations and anions As the rinse water is passed through a resin bed the resin exchanges ions with the inorganic compounds in the rinse water The metals are recovered by cleaning the resins with an acid or alkaline solution The metals then can be electrowon from the resin regeneration solution while the IX treated water can be returned to the rinse system for reuse IX units can be used effectively on dilute waste streams and are less delicate than RO systems but the water must be filtered to remove oil grease and dirt to protect the resin Certain other metals may eventually foul the resin requiring a special procedure to remove the contaminant

Ion exchange is commonly used to treat rinse water from chromic acid process baths Exhibit 3-7 shows how an IX unit can be used to recover chromic acid and reuse rinse water The rinse water waste stream is filtered prior to passing through a cation column and two anion columns The primary cation resin column removes heavy metals from the solution while the anion resin column removes the chromate ions The chromates are removed from the anion resin with sodium hydroxide forming sodium chromate which is then regenerated as chromic acid by

Exhibit 3-7
Ion Exchange System for Chromic Acid Recovery

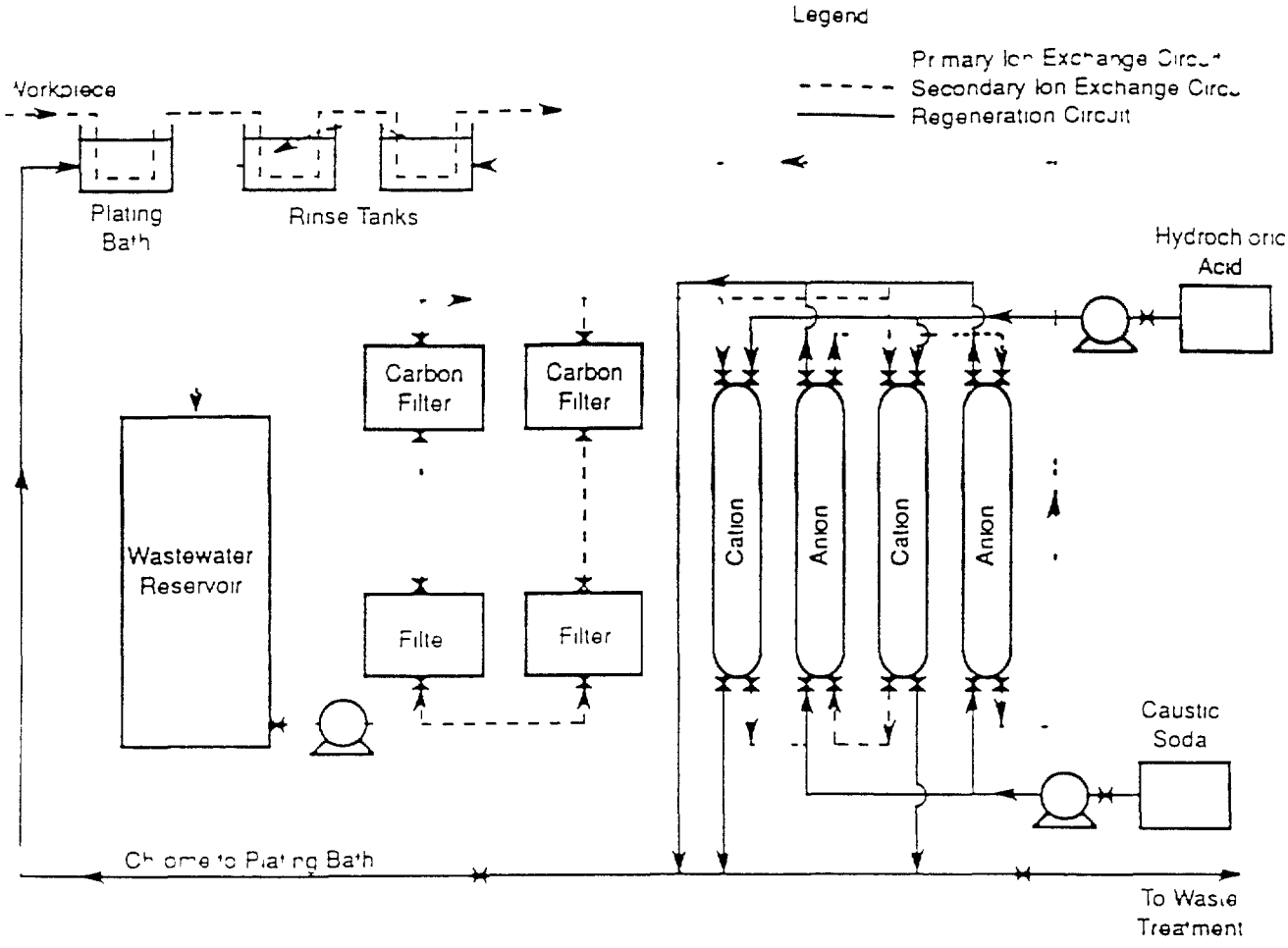

passing through a secondary cation bed The secondary bed replaces the sodium ions with hydrogen ions The cation beds themselves are regenerated with hydrochloric acid and the spent regenerant solution is usually treated in the wastewater treatment system It is important to know that chloride contaminates the chromium plating bath and that treatment with silver nitrate to precipitate the chloride is expensive

IX equipment requires careful operation and maintenance In addition, recovery of chemicals from the resin columns generates significant volumes of regenerant and wash solutions, which may add to the wastewater treatment load

Electrolytic Recovery/Electrowinning Electrowinning is a process used to recover the metallic content of rinse water It operates using a cathode and an anode which are placed in the

51

rinse solution As current passes between them metallic ions deposit on the cathode generating a solid metallic slab that can be reclaimed or used as an anode in an electroplating tank The electrowinning process is capable of recovering 90 to 95 percent of the available metals and has been successfully used to recover gold silver tin, copper zinc, solder alloy and cadmium

Several basic design features well known to the electroplating industry are employed in electrolytic recovery (1) expanded cathode surface area (2) close spacing between cathode and anode and (3) recirculation of the rinse solution Electroplaters can design their own units by closely spacing parallel rows of anodes and cathodes in a plating tank and circulating rinse solutions through the tank This process can also be used to recover metals from spent process baths prior to bath treatment in the wastewater treatment system

High surface area electrowinning/electrorefining is another method of electrolytic recovery The metal-containing solution is pumped through a carbon fiber cathode or conductive foam polymer which is used as the plating surface To recover the metals, the carbon fiber cathode assembly is removed and placed in the electrorefiner, this reverses the current and allows the metal to plate onto a stainless steel starter sheet These systems recover a wide variety of metals and regenerate many types of solutions High surface area metal recovery is used mainly with dilute solutions such as rinse water effluent

Electrodialysis Electrodialysis is used to concentrate and separate ionic components contained in rinse water solutions as shown in Exhibit 3-8 A water solution is passed through a series of alternately placed cation- and anion-permeable membranes These membranes are placed parallel to the flow of water, and an anode and cathode are placed on opposite sides of the membrane stack The anode and cathode create an electropotential across the stack of membranes causing the ions in the rinse solution to migrate across the membranes The selectivity of the alternating membranes causes both anions and cations to migrate into alternating channels and ion-depleted water remains in the other channels The concentrated solution can be returned to the plating baths while the treated water is recycled through the rinse system

EPA has sponsored demonstration projects to test the application of electrodialysis to nickel recovery from rinse water One unit was tested for 9 months without significant operating problems This unit successfully recovered nickel salts for reuse in plating baths allowing the treated rinse water to be recirculated into the rinse system

3 2 3 3 Recycling Solvents Many companies have converted their solvent-based precleaning or degreasing processes to alkaline cleaning solutions that can be batch treated on site in a facility s existing treatment system Nevertheless solvent degreasing is still used for some cleaning operations in the metal finishing industry

52

Exhibit 3-8
Electrodialysis Flow Schematic

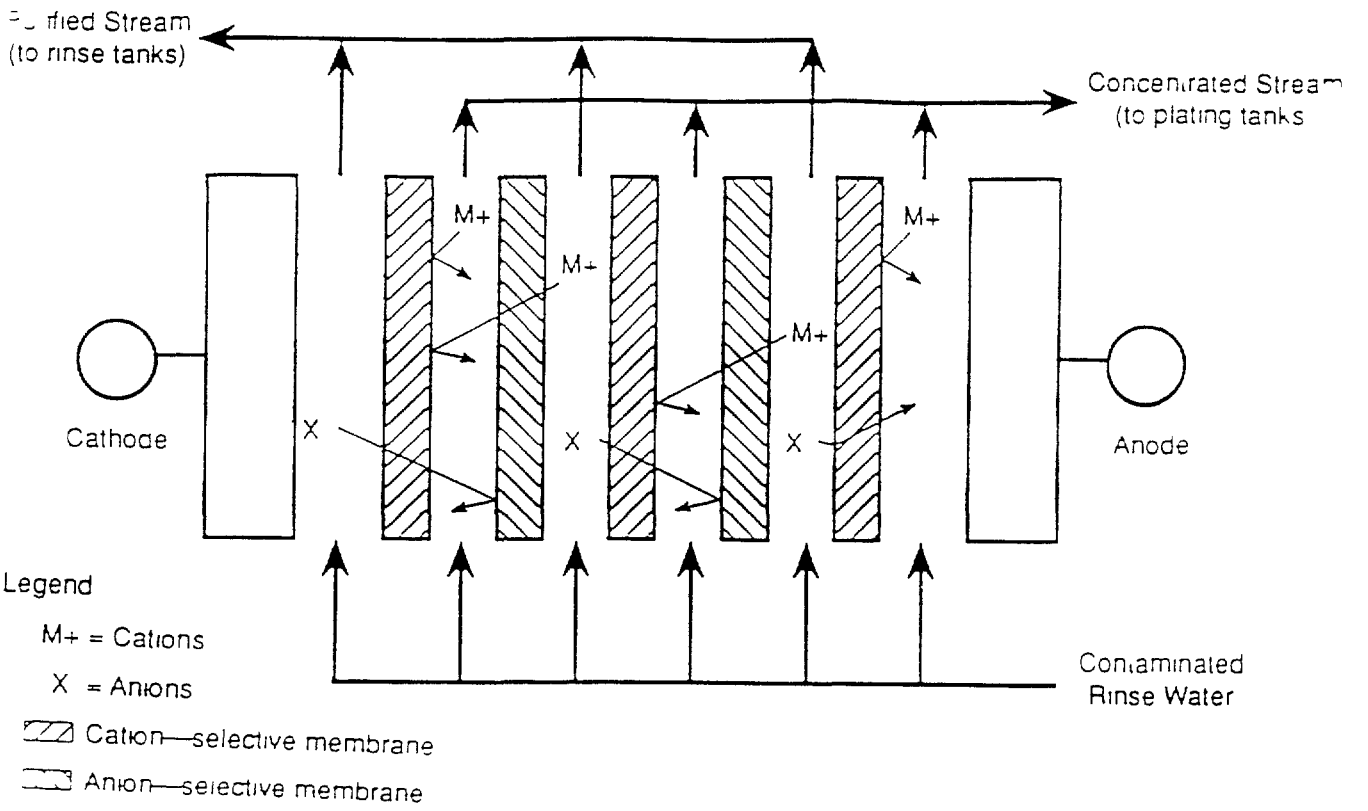

Solvents can be recycled off-site as part of a package solvent service Companies will rent degreasing equipment supply all solvents and accept the waste solvents for off-site recycling These services may be cost effective for low volume users of solvents High volume users of solvent cleaners can recycle solvent waste on site using distillation technologies The solvent is separated from the contaminants by heating the solution above the solvent's boiling point The solvent vapors are then condensed in a condensation chamber The contaminants remaining in the heating vessel are handled as a hazardous sludge The economic benefits of off-site versus on-site recycling have to be judged based on virgin solvent purchase cost off-site service fees amount of waste solvent generation disposal cost of waste solvent disposal cost of distillation still bottom sludge and cost of on-site equipment A general rule of thumb is that on-site recovery be considered if one drum (55 gal) or more of waste solvent are generated per month

A recent study for USEPA in 1992 looked at a company that generates 900 gallons of waste methylethylketone (MEK) solvent per year This waste solvent could be disposed of directly at a cost of $400 per 55-gallon drum A 55-gallon capacity on-site batch distillation still was used to recover the MEK for use in a painting operation Every 55-gallon batch gave 35 gallons of

recycled solvent and 15 to 20 gallons of still bottom sludge, on average This sludge was hauled away for incineration for $500 (minimum) per 55-gallon drum Purchasing new MEK solvent would have cost the company $10 per gallon Under these conditions the batch recovery unit which costs approximately $30 000 has a payback of around 3 years Smaller stills of 5-gallon capacity are also available in the $5 000 to $8 000 range Intermediate 15-gallon stills cost between $8 000 and $12 000

3 2 4 Replacement Technologies Existing replacement technologies if used properly can avoid most of the environmental problems associated with conventional coating methods such as emissions of heavy metals acids and caustics Exhibit 3-9 contains alternatives to conventional processes In addition refer to Appendix 4 for a detailed discussion of alternatives to conventional metal finishes

There is not one replacement technology appropriate for every coating need However each of the replacement technologies described here is appropriate for many applications and does reduce environmental impacts

Waterborne Emulsion Convention Coating Current chromate coating systems have in some cases been replaced with a dry-in-place, waterborne emulsion conversion coating The product is completely chromium free and adaptable to heat spray applications The permanganate-based product is considered environmentally safe at ambient temperatures In fact small residual amounts of potassium salt that is deposited as the primary coat are desirable in the industrial wastewater treatment because it aids in treatment of other common wastewater contaminants

Chromate conversion coating replacements can result in coatings that are strongly bound to the metal surface thus providing good corrosion resistance Uniform coverage may be easily achieved as indicated by a color indicator The unpainted coating does not rub off on workers hands or emit toxic fumes upon welding The parts can be painted immediately which lessens the time required to complete the part finishing

Chemical Vapor Deposition Chemical vapor deposition (CVD) is generally used to coat irregularly shaped parts This method is used to increase the strength purity, and density of the coated material CVD creates a coating by depositing a chemical vapor on a substrate through thermal or chemical reaction Variations of CVD include atmosphere low-pressure and plasma-assisted methods In atmospheric vapor deposition the part must be thoroughly cleaned before chemical deposition The purity of the finished CVD product leads to extensive use in optical coating applications Proper material selection results in reduced emissions and high-quality finishes Plasma-assisted CVD can be used on parts which may be deformed by the high temperatures of atmospheric CVD Performing CVD under vacuum produces more uniform coatings with higher purity Waste products originate from the low material utilization and the hazardous components in the pretreatment stages

Ion Beam Technique The ion beam technique implants metal ions under an inert environment into the surface of metal parts This type of process includes ion vapor deposition (IVD) ion implantation and ion-beam-enhanced deposition (IBED) The IVD aluminum coating process works well in replacing cadmium coatings in that it alters conductivity hardness wear and corrosion However coating control can be difficult Ion implantation processes work by altering the chemical composition near the surface of the metal to enhance conductivity hardness wear and corrosion resistance This option is attractive due to low operating temperatures and minimal waste generation IBED used when lattice defects are present is more effective in coating than direct implantation

Plasma and Spray Technologies Plasma and spray replacement technologies combine a gas with metallic powder heated to a molten state and apply the coating to the part surface Plasma processes include detonation gun and vacuum plasma Detonation gun uses a combustion flame spraying process, which uses oxygen and acetylene There is a limited range of materials that can be used as coatings or substrates With employment of a vacuum properties of the coats can be improved High temperatures limit applications in many cases The plasma vapor process's main pollutant is overspray, however, generation of ozone via the plasma arc is also of concern Metal and acid emissions are generally reduced using this method Thermal spray processes include HVOF (high-velocity oxygen fuel), slurry and plasma arc HVOF applies metals and other materials in powder form through flame spraying A high degree of surface preparation is required in some cases to increase bond strength Slurry applications are commonly used in the coating of jet engine components A slurry of aluminum powder ceramics binders and solvents is applied to the metal substrate through spraying or dipping techniques dried and fired This method requires minimum surface preparation Because of high arc temperatures plasma arc techniques allow a variety of materials to be applied through spraying Porosity of coatings deposited by this method can be varied to suit the desired application Operating costs are higher due to the need to replace parts that are thermally damaged by the process Care must be taken to protect the workers from fumes and metal dust emitted in this process

Evaporation Evaporation methods coat metal through evaporation of the metal from a molten pool using an electron beam Evaporation methods include electron beam reactive deposition thermionically enhanced evaporation and coaxial electron beam This method is widely used in the computer industry for coating memory boards Thermionically enhanced evaporation methods produce improved films as a result of the increased fraction of ionization Evaporation requires more surface preparation than conventional techniques do, is generally easier to operate and reduces emissions however operating this system can be difficult because pressure must be closely regulated

Exhibit 3-9
Metal Treatment/Finishing Replacement Technology Characteristics

Replacement Technology	Conventional Technology	Replacement Status*	Surface Preparation Required	Operating Simplicity	Relative Capital Cost	Relative Operating Cost	EHS risk
Chemical vapor deposition	Plating (electrolytic)	P	Same	Better	Higher	Same	Lower
	Plating (electroless)	P	Same	Better	Higher	Same	Lower
	Cladding	P	More	Better	Higher	Higher	Same
	Anodizing	R	Same	Better	Higher	Same	Lower
Ion beam techniques	Plating (electrolytic)	P	Same	Better	Higher	Higher	Lower
	Plating (electroless)	P	Same	Better	Higher	Higher	Lower
	Cladding	R	More	Better	Higher	Higher	Lower
	Case hardening	C	More	Better	Higher	Higher	Lower
	Dip/Galvanizing	R	More	Better	Higher	Higher	Lower
Plasma and spray	Plating (electrolytic)	P	Less	Same	Higher	Same	Lower
	Plating (electroless)	P	Less	Same	Higher	Same	Lower
	Cladding	P	More	Same	Higher	Same	Lower
Evaporation	Plating (electrolytic)	R	More	Better	Same	Same	Lower
	Plating (electroless)	P	More	Better	Same	Same	Lower
	Cladding	C	More	Better	Higher	Same	Lower
	Dip/Galvanizing	R	More	Better	Higher	Higher	Lower
Material replacement	Chromating	C	Same	Same	Same	Same	Lower

EHS = Environmental Health and Safety
* P = pilot C = commercial R = research

3.2.5 Summary

Exhibit 3-10 gives a summary of the major pollution prevention options in the metal finishing industry.

Exhibit 3-10
Pollution Prevention Options

Source Reduction	Recycling and Resource Recovery
▸ Using nonchelated process chemistries	▸ Reusing rinse water effluent
▸ Reducing the volume of rinse water by ▫ Using spray rinse systems ▫ Creating agitation in the rinse tank ▫ Employing multiple use rinses for compatible processes ▫ Using multiple stage counter-current rinse systems ▫ Using conductivity controls and flow timers	▸ Implementing material reuse techniques ▸ Regenerating spent process bath solutions ▸ Recycling process bath chemicals and rinse water solutions through use of chemical recovery technologies including ▫ Evaporation ▫ Reverse osmosis ▫ Ion exchange ▫ Electrolysis ▫ Electrowinning ▫ Electrodialysis
▸ Extending the life of the process baths through ▫ Good housekeeping ▫ Initiating electrolytic recovery or chemical treatment and filtration ▫ Reducing drag-in ▫ Using distilled deionized or reverse osmosis water ▫ Properly maintaining racks ▫ Using purer anodes and bags	▸ Recycling spent solvents by distillation ▸ Separating various waste streams for recycling selective treatment and batch treatment
▸ Reducing drag out loss by ▫ Operating process baths at the lowest acceptable chemical concentrations ▫ Operating process baths at higher temperatures ▫ Withdrawing workpiece racks at a slower rate ▫ Draining workpiece racks for longer periods ▫ Capturing drag out on a drainage board that drains back into the process tank ▫ Adding wetting agents to process baths ▫ Improving workpiece positioning ▫ Recovering process chemicals in a drag out tank and replenishing the process bath with the recovered solution ▫ Spraying directly over the process tank	▸ Implementing alternative treatment systems such as ion exchange reverse osmosis evaporation and electrolysis

CHAPTER 4
ORGANIC FINISHING (PAINTING)[1]

4 1 INTRODUCTION

Paint application is a finishing step in the manufacturing process that imparts decoration corrosion and oxidation protection to finished items The overall manufacturing process is as follows

strip ⇨ clean ⇨ inorganic surface treatment ⇨ paint application ⇨ cure

Currently environmental problems caused by the industry's painting operations are large quantities of VOC emissions as well as the generation of solid and liquid wastes Solvent carriers in paint formulations contain VOCs that are emitted while the paint is being applied and while it is curing In the U S these VOC emissions give rise to costly vapor recovery or treatment systems Also paint application transfer efficiencies are typically poor less than 50 percent The resulting paint overspray creates environmental health, and safety problems for industry and must be collected and disposed of as hazardous waste

The reader should note that this chapter reviews several pollution prevention measures and alternative technologies used in the painting application industry It is recommended that the reader refer to Appendix 5 US EPA Guide to Cleaner Technologies - Organic Replacements for a detailed discussion of the advantages and disadvantages associated with replacement coatings

4 1 1 Process Description

Many different paint application methodologies are employed today Methods include use of brushes and rollers dip tanks flow coaters curtain coaters and various spray processes The selection of a given method is dependent on the size and shape of the parts type of coating applied required finish quality workload, and the availability of utilities such as compressed air and power

---

[1] This chapter is derived from the following documents
H Freeman Industrial Pollution Prevention Handbook McGraw-Hill Inc 1995 (Chapter 29 and 43)
Minnesota Association of Metal Finishers Metal Finishing Pollution Prevention Guide July 1993

Solvent spray methods of paint application are attractive to industry because of low equipment costs and ease of operation These methods utilize a hand-held or automated gun to atomize and project the paint onto the part surface However a major deficiency with solvent spray systems is their inability to transfer a substantial portion of the paint to the part Typically conventional solvent spray transfer efficiencies range from 30 to 40 percent This efficiency leads to larger amounts of VOC emitted per part painted

To control overspray many painting operations are conducted in spray booths Both dry filter and water-wash spray booths are common Water-wash booths employ a water curtain or wall to knock down and trap the overspray The paint particles may either settle to the bottom of the water sump or float on the water where they are periodically disposed of as a sludge To eliminate the generation of a wet sludge some facilities in the U S have converted to dry filters

Although new spray equipment such as airless and air-assisted airless guns have better transfer efficiencies they have not been able to effectively alleviate the overspray problems associated with conventional solvent painting However high-volume/low-pressure (HVLP) guns provide an alternative which increases the transfer efficiency to the 70 to 90 percent range and considerably lowers the environmental impact of the painting process

Industry uses electrostatic spray methods of paint application because of its ease of operation In this process atomized paint particles from a hand-held or automated spray gun are positively charged with static electricity, causing an attraction between the paint and the grounded metal part The spray guns used are similar to those used in solvent spray systems and include air airless and air/airless rotary bells and disks Electrostatic spray systems have higher initial capital costs than solvent spray, but paint transfer efficiencies are increased to the 60 to 80 percent range This greater efficiency translates to decreased emissions as compared to solvent spray methods of application However overspray is still produced and requires cleanup and disposal of potentially hazardous waste

Dipping flow applications are also employed in the painting of metal parts In dipping the part is immersed in a tank of liquid coating then withdrawn and allowed to dry In flow coating the part receives a shower of coating in a paint booth followed by drying Another dip flow coating method is curtain coating which is a high-speed painting process using a revolving applicator roller to coat a flat part Dipping/flow methods have the same low degree of operating difficulty as solvent spray but transfer efficiencies are greater than 90 percent Since a great deal of paint is efficiently transferred to the part VOC emissions come mostly from paint evaporation The number of applications for dip/flow methods of painting is limited because of the inherent difficulty in controlling the coating thickness

The final stage of any painting operation is the cleaning of reusable equipment such as spray guns pressure pots and hoses To clean this equipment operators typically fill the system with solvent and then operate the spray gun to flush out the paint To minimize solvent emissions

resulting from cleaning operations many local air quality agencies mandate the use of enclosed cleaning systems Cleaning of paint-coated hooks and racks may be performed in thermal burn off ovens by high-pressure water sprays or by chemical-based strippers

Wastes generated by the painting process may include air emissions of volatile organic compounds (VOCs) and particulates leftover paints and coatings empty paint cans disposable brushes and rollers dirty solvents and thinners used for equipment cleanup dirty filters from dry filter paint booths and paint sludge from water-wash paint booths The toxicity and hazard of the wastes generated is dependent on the concentration of solvent remaining in the waste and the presence of heavy metals such as lead and chromium compounds in the paint

4 2 POLLUTION PREVENTION STRATEGIES

4 2 1 Improved Operating and Inventory Practices

Improved operating and inventory practices represent pollution prevention strategies that have relatively low-costs and are relatively easy to implement The following is a summary of these types of practices

4 2 1 1 Eliminate the Need to Paint Paints and coatings perform an important function of protecting materials from serious degradation due to environmental exposure Without paints steel structures would rust away and timber would decay Material repair and replacement costs would be prohibitive Paints and coatings also provide an aesthetic function adding color and variety to the local environment

However the need for painting can sometimes be avoided by selecting materials that combine both function and aesthetics In the U S use of injection-molded plastic shells in place of painted metal cabinets is widely practiced in the electronics industry Building construction employing the use of vinyl siding PVC and FRP plastics precolored concrete and metal trim materials such as stainless steel copper bronze and aluminum are also utilized

4 2 1 2 Monitoring Incoming and As Applied Paint Quality (Solids Content) The ability to control and monitor the quality of the incoming paint will help minimize the amount of paint needed for a given job Poor quality paint will often necessitate the need to strip the paint off the existing part and repaint In addition, controlling the quality of the paint received will reduce the quantity of unusable paint that will need to be disposed of, sent back to the supplier or sold offsite

The ability to measure the solids and solvent content of incoming and as applied paint will help control the quality of the paint applied by insuring that proper paint application specifications are met

The simplest method to measure the solids content of paint requires the use of a precision scale and an oven However it is possible to measure the solids content within the accuracy necessary for pollution prevention without special or dedicated equipment For the purpose of pollution prevention it is necessary to know the solids content only to an accuracy of + - 5 to 10%

The solids content of a batch of paint can be determined using the following procedure

- Using the most accurate balance available weigh a piece of aluminum foil (about 15 cm x 15 cm) Fold the edges of the aluminum foil upward to create a small tray
- Fill the tray with a known volume of paint
- Weigh the tray with the known volume of paint and record the results
- Use a safe heat source to dry the paint Although it may not be possible to completely dry the paint drying to the point where the paint is still tacky will be sufficient to insure that the solvent has be driven off
- Weigh the tray with the dry paint and record the results Determine the mass lost in drying and calculate the amount of solids remaining as percentage of the initial mass of the paint

4 2 1 3 Standardize Paints and Colors The generation of cleanup wastes can be reduced by standardizing the number of paints and colors employed The frequent changing of colors results in the need to purge supply lines and strip down the paint booths often so as to avoid color contamination Standardization may also make it feasible for the purchase of paint in returnable bulk containers These containers may be owned by the coating formulator who picks up cleans refills and returns the empty containers as needed The use of bulk containers can be very cost effective in addition to eliminating the generation of empty paint cans and leftover paint

The use of non-pigmented paint may be a viable option for facilities that cannot standardize the number of colors required but still want to benefit from a bulk container arrangement with their supplier With such an arrangement small lots of the stock paint are drawn off and pigmented as needed Since the paint is mixed as needed waste due to over purchase of a color that is no longer used is avoided To maintain color consistency from batch to batch the use of a color matching system is often necessary Such systems may be purchased for $6 000 to $20 000

4 2 1 4 Implement Strict Material Tracking and Control There are many ways to reduce the indiscriminate use of thinners and cleanup solvents Making employees sign out for cleaning supplies or issuing solvent debit cards to painters often results in the reduction of material consumption and allows companies to track materials use Studies in the automotive refinishing

industry have shown that a rigid inventory control can reduce solvent waste generation rates by 50 to 75 percent

Solvent use can also be reduced by applying low-volume cleaning techniques Mixing containers and paint pots should first be drained and then scraped free of residual paint with a soft wood or plastic spatula The containers are then rinsed with a small amount of solvent and wiped clean with a lint-free rag To promote the reuse of cleaning solvent the paint sludge initially removed from the containers and paint pots should be stored separately from the dirty rinse solvent By not loading the solvent with solids one can decant and reuse it several times Some shops even use this rinse solvent as thinner in the next compatible batch of paint

When paint pots are used disposable polyethylene bags or liners can be utilized Instead of pouring out the waste paint and cleaning the pot with solvent one can use a bag or liner which allows the leftover paint to be lifted out of the pot and placed in a collection drum for disposal Bags and liners typically cost $1 each which is much less than the avoided cost of solvent purchase and disposal

4 2 1 5 Return Expired Materials to Supplier Painting materials often have a limited shelf life and when it is exceeded may have to be disposed of as hazardous waste Quite often the shelf life is based on some minimum time during which the formulator guarantees the quality and performance of the paint Once the shelf life has been exceeded, there is greater potential that the paint will not be suitable for use due to problems such as physical separation of the compounds and clumping of the pigments and resins

If painting materials are properly stored and routinely shaken then shelf life may be extended within reason Some paint suppliers in the U S offer a fixed per-gallon fee service whereby they will pick up remix recertify and return the paint Batches of unused paint can sometimes be mixed together and be retinted to provide a useful product Retinting can only be performed if the surplus paints are of similar type and color Such a service could be arranged by common agreement between the manufacturer and the user and the reprocessing fees should be specified in the purchase contract

4 2 1 6 Set Application Standards Film thickness may be easily measured by means of wet film gauges or dry film meters The monitoring of applied film thickness is critical to ensure that a uniform and consistent coating of paint is being applied Too thin a coat will result in premature failure in the field while too thick a coat represents excessive cost and waste

Other standards that can be established for QC purposes include crosshatch adhesion film hardness and solvent resistance Furthermore the curing time and temperature profile should be monitored to ensure that the paint is not being over or undercured Next to the painting of dirty parts improper curing is the second most common reason for coating failure Specification and

adherence to standards can do much to minimize the level of rejects and ease troubleshooting when problems arise

4 2 2 Efficient Use of Application Equipment

Selection of the application equipment can have a big impact on paint usage and subsequent waste generation Assuming that the required amount of coating to be deposited on the painted object is known total coating usage is a direct function transfer efficiency Transfer efficiency is defined as follows

$$\text{Transfer efficiency (\%)} = 100 \times \frac{\text{mass of paint solids deposited on an object}}{\text{mass of paint solids sprayed at the object}}$$

By using spray guns with high transfer efficiencies, paint usage (and hence VOC emissions) can be minimized The paint application equipment currently on the market is listed below roughly in the order of increasing transfer efficiency

- conventional spray (low transfer efficiency)
- airless spray
- air-assisted airless spray
- high volume low pressure spray
- electrostatic spray
- curtain coating
- roll coating
- vacuum application (high transfer efficiency)

Conventional spray Conventional spray equipment atomizes the coating as high pressure air and coating exit the gun orifice The coating atomization obtained is very fine resulting in a uniform coating deposition However the transfer efficiency of conventional sprays is low (35 to 50%) because the high velocity air deflects the paint away from the part

One of the major reasons air-atomized guns are so widely used is that they allow the operator to control many of the variables that affect finish quality Such variables include fluid pressure and orifice diameter air atomization pressure air-fluid pressure ratio fan shape and trigger operation

Airless spray Airless spray equipment uses high hydraulic pressure to atomize the coating by forcing it through a small orifice The coating atomization is not as fine as with conventional spray The transfer efficiency however is raised to 50 to 65 percent due to the lower volume of

air that carries coating past the part Airless spray is often used for highly pigmented or highly viscous paints where appearance is not critical (zinc-rich primers and sound deadeners)

Air-assisted airless spray Air-assisted airless spray equipment is similar to air assisted except that air nozzles at the tip are added to further break up the coating

High volume low pressure (HVLP) HVLP equipment uses high volumes of air at low pressures to atomize the coating The low velocity air is less able to influence the direction of the paint particles and thus more paint ends up on the part Transfer efficiencies are 50 to 70 percent A disadvantage with HVLP equipment is that production rates are typically lower due to the low pressures used This disadvantage is being addressed by a technology called hydraulically-assisted HVLP which uses higher feed line pressure The higher pressures increase the production rate and provide additional atomization

Electrostatic spray Electrostatic spray equipment applies an electrostatic charge to the atomized paint particles which are then attracted to the grounded part All surfaces of the grounded object, including the back side of small parts, can be coated by the mist directed at one side of the object (wraparound effect) Electrostatic versions of most spray equipment have been developed and their transfer efficiencies often exceed 90 percent

It is essential that the electrostatic spray system be properly grounded to insure that the desired transfer efficiency is achieved Systems typically have grounding wires with clamps that need to be connected to a good earth ground preferably a clean metal surface connected to the ground

Curtain coating/roll coating Curtain coating and roll coating are both used to apply coatings to flat stock with no profiling The transfer efficiency of these processes exceeds 90 percent

Vacuum coating Vacuum coating is most suitable for linear products The transfer efficiency of this process exceeds 90 percent

4 2 2 1 Improving Spray Equipment (Gun) Transfer Efficiency Transfer efficiency is dependent on many parameters such as application technique target shape and size spray booth arrangement paint characteristics paint and air flow rates spray gun-to-target distance spray gun condition and operator error Some of these parameters can be controlled by the operator while others cannot

Spray guns achieve optimum performance under a distinct set of operating conditions Excessively high flow rates can reduce efficiency by increasing the amount of bounceback (paint bouncing back off the target) and overshoot and excessively high air pressure can lead to premature drying of the paint before it reaches the target (paint fog) When allowed control many operators tend to operate their equipment at excessively high air pressures and flow rates Proper operation and maintenance of a spray gun can result in a significant increase in efficiency

For example a 50% jump in efficiency was noted for properly maintained and operated airless and electrostatic systems

Measuring Transfer Efficiency There are several methods of measuring the transfer efficiency and the yield of paint spray systems

Two of the standard procedures are described below

Yield determination

- Determine the solids content of the paint
- Determine the mass of the paint paint container and spray gun
- Measure the surface area of the parts and spray the paint the parts
- Measure the amount of paint that has been consumed by weighing the paint container the remaining paint and the spray gun
- Calculate the surface area covered per kilogram of paint used

  It should be noted that this method assumes a uniform coating thickness which is generally not the case For product lines that require different thicknesses of coating it is necessary to calculate the cost of paint per square meter of surface while taking into account the variation in coating thickness

Transfer efficiency determination

- Prepare aluminum foil parts which have the same shape as the parts that are generally painted
- Determine the mass of the paint container spray gun, paint and aluminum parts
- Spray the paint on pieces of aluminum foil
- After the test determine the mass of the container remaining paint gun and aluminum parts
- Compare the pre-spray mass of the foil to that of the foil plus the paint The transfer efficiency is equal to the increase in mass of the aluminum part divided by the drop in mass of the cup and gun

4 2 3 Equipment Cleaning and Stripping Alternatives

A significant portion of paint-related waste results from cleaning operations The components which need cleaning vary with the application method They may include spray guns rollers or some other form of fluid distributor paint pots dip tanks collection tanks or pans conveyors hooks racks a spray booth paint heater oven pumps and hoses Measures for reducing solvent cleaning waste are provided in the following sections

4 2 3 1 Equipment Modifications Equipment modifications such as the use of Viton paint lines in place of rubber lines shortening paint lines constructing tanks with mechanical wall scrapers and the use of non-stick surfaces on tank walls reduce the residual paint clinging to the equipment which in turn minimizes the amount of solvent needed for clean-up

4 2 3 2 Solvent Use Reduction Measures The quantity of solvent used in cleaning operations can also be reduced through the use of plastic or foam "pigs" or by the use of pulse cleaning For plastic or foam pig cleaning compressed air or an inert gas (to minimize drying) is used to propel the pig through the lines pushing paint ahead of it (metal guide) For pulse cleaning a paint line is cleaned by successive pulses of solvent and air The first pulses of solvent do the heaviest cleaning while the following pulses do the final cleaning

Use of cleaning solvent from one production line as a thinning solvent for another can also reduce solvent waste In addition, using recycled solvent to flush paint guns and lines is an effective way to reduce solvent waste

4 2 3 3 Alternatives to Fast-Evaporating Solvents Fast-evaporating solvents are typically used to clean paint equipment Changing the type of paint system used can obviously decrease or eliminate solvent usage There are also alternatives to the use of fast-evaporating solvents such as slow-evaporating solvents alkaline or caustic cleaning pyrolysis media blasting and fluidized bed pyrolysis

Slow evaporating solvents Various slow-evaporating solvents can be used for flushing painting and coating equipment and paint stripping These include

- n-methyl-2-pyrrolidone (NMP)
- dibasic ester (DBE)
- dimethyl sulfoxide (DMSO)

Mixtures of these compounds have been shown to be quite effective in removing coatings The effectiveness of these compounds can be increased by raising the solution temperature These solvents do not possess the environmental hazards toxicity or flammability of their fast-evaporation solvent counterparts Disadvantages of these compounds include high cost ($10 00 to $12 00 per gallon) the need for vacuum distillation for effective reclaim and the incompatibility of these solvents with some plastics

Alkaline or caustic cleaning systems Alkaline or caustic cleaning systems are used mainly in the cleaning of mixing equipment and most effectively with waterborne coatings The caustic solutions are usually used as hot dip solutions while the alkaline detergents can be used in high-pressure spray applications Concerns about remaining residues preclude the applicability of these processes to flushing application guns and lines

Pyrolysis Pyrolysis is a process used as a stripper to clean ancillary equipment such as racks hooks and rejected parts The equipment/parts are placed in an oven and are heated until the coating on the equipment part volatilizes The vapor then enters an afterburner where it is oxidized Concerns with this process include a residual ash which must usually be removed from the parts and the proper disposal of the ash

Media blasting Media blasting is typically used as a stripping process for ancillary equipment Various types of media can be used such as plastic beads sodium bicarbonate crystalline ice wheat starch crushed walnut shells and carbon dioxide

Fluidized bed pyrolysis Fluidized bed pyrolysis is a combination of pyrolysis and media blasting In a fluidized bed stripper, sand is agitated with hot air until the sand particles are virtually suspended or 'fluidized ' Equipment/parts to be cleaned are placed into this fluidized bed where the combined action of the heat and abrasive media remove the coating

4 2 3 4 Use of Enclosed Gun Cleaners To reduce air emissions and promote recycling, the use of enclosed cleaning stations is required by many U S air quality agencies Some cleaning stations contain air-driven solvent-condensing unit and are designed to be mounted on an open-top 55-gallon drum Provided that operators are careful not to introduce too much paint sludge into the drum reusable cleanup solvent can be decanted from the drum Enclosed cleaning stations are available for less than $1,000 Several companies lease this equipment along with the cleaning solvent

4 2 4 Segregation

Segregation of different waste types is very important in coating Proper segregation can ensure the successful recycling of wastestreams or at least minimize the volume of hazardous wastestreams Proper segregation practices can be important for paints which contain heavy metals and for solvent-based and water-based wastes

Heavy metal-containing paints Heavy metal-containing paints are used as primers and may contain cadmium chromium or lead It is important to segregate these coating processes from others as the by-products of the processes such as filters and overspray clean-up products will most likely be hazardous wastes due to the heavy metal content

Solvent-based and water-based wastes Solvent-based and water-based wastes should be segregated in order to maximize the ability to recycle these materials

4 2 5 Process Modifications

Process modifications can be made to reduce the amount or types of wastes generated

Examples include

Heating paint Heating paint will reduce the viscosity and also reduce the amount of solvent which must be used as thinner

Painting parts prior to assembly Painting parts prior to assembly can reduce the complexity of the parts geometry The less complex parts are more amenable to powder coating (see Appendix 5) or electrocoating

Heating parts prior to powder coating Heating parts prior to powder coating is useful for castings or other large parts The preheating allows the coating to cure as it is applied and also serves to vaporize any residual oil on the part In the case of castings an additional benefit of the preheating is that the part is degassed prior to application of the coating In a conventional process, in which curing follows the powder coating, degassing during curing will cause corrosion problems This process can be used after conventional part cleaning with no pretreatment step required

Using prepainted parts Using prepainted parts eliminates the need for painting and is most applicable to a captive shop

4 2 6 Treatment and Recovery Alternatives

Paint solvents and waste solutions containing these materials may be treated and/or reused Some of the applications are

Solvent reclamation Solvent reclamation is typically done by distillation Clean solvent is recovered for reuse and paint waste is concentrated for disposal

Flocculating solids Flocculating solids from water-borne coatings is typically performed using polymer compounds used in water treatment This is a method of concentrating the paint solids and the clarified water may be able to be discharged without further treatment

Solids reuse and blending Solids reuse and blending may be useful for the solid products of solvent distillation flocculation or just for extra paint Depending upon the chemistries and amounts involved these types of waste products may be blended into useful coatings for undercoats

4 2 7 Substitute Coatings/Alternative Technologies

There are coatings on the market that can be used as alternatives to conventional high-solvent based coatings These alternatives include

- waterborne coatings
- powder coatings
- high-solids coatings
- supercritical carbon dioxide formulations

Waterborne coatings Substitution of solvent-based paints with waterborne coatings can significantly reduce air emissions solvent content in waterborne coatings may range from 5 to 15% as compared to 40 to 50% for a solvent-based paint In addition to reduced solvent content waterborne coatings do not require solvent for thinning or equipment cleanup These coatings have exhibited a wide range of performances when used for industrial applications Performance is not only dependent on paint composition but also on the extent of surface preparation performed and application procedure employed Waterborne coatings may have different application requirements than solvent-based paints and require longer drying times

Powder coatings Powder coating consists of the application of finely ground thermosetting and thermoplastic powders to a part The parts are then cured by heating to melt and fuse the powders into one continuous coating Advantages include no solvent emissions reduced operation costs ability to reuse overspray, and lower energy consumption Disadvantages include high curing temperatures the inability to easily change colors the difficulty in coating complex part geometries and high capital cost

High-solids coatings High-solids coatings have the consistency of an ink or paste and require the use of high-pressure airless guns Since these coatings are highly viscous the supply lines to the gun may be heated to reduce the viscosity of the fluid The principal limitations of high-solids coatings are that they tend to provide a pebbled or textured finish and that the range of available formulations is limited

Supercritical carbon dioxide formulations A new technology using supercritical carbon dioxide as a replacement for midrange solvents seeks to overcome some of the application problems encountered with spraying high-solids coatings The fluid delivery system meters and mixes liquid carbon dioxide (supplied from gas cylinders) with the coating concentrate and then heats and pressurizes the mixture into the supercritical range Use of the supercritical CO_2 is reported to improve paint atomization which results in a high-quality finish The technology can also eliminate the need for halogenated solvents used in some VOC-compliant paints

Appendix 5 provides a detailed discussion of the various substitute coatings

4 2 8 Pollution Prevention Strategy Summary

A summary of the most promising pollution prevention strategies for the painting industry is provided in Exhibit 4-1 This table emphasizes the strategies that are the most easily implemented and have the lowest cost (e g improved operating practices)

Exhibit 4-1
Pollution Prevention Summary - Painting Industry

Waste Origin/Type	Pollution Prevention and Recycling Methods
Coating Overspray/ Coating material that fails to reach the object being coated	Maintain 50% overlap between spray pattern Maintain 6 to 8-inch distance between spray gun and the workpiece Hold gun perpendicular to the surface Trigger gun at the beginning and end of each pass Properly train operators Use robots for spraying Avoid excessive air pressure for coating atomization Recycle oversprav Use electrostatic sprav systems Use turbine disk or bell or air-assisted airless sprav guns in place of air-spray guns Install on site paint mixers to control material usage Inspect parts before coating
Stripping Wastes Coating removal from parts before applying a new coat	Avoid adding excess stripper Use spent stripper as rough prestrip on next item Use abrasive media paint stripping Use plastic media bead-blasting paint stripping Use cryogenic paint stripping Use thermal paint stripping Use wheat starch media blasting paint stripping Use laser or flashlamp paint stripping
Solvent Emissions Evaporative losses from process equipment and coated parts	Keep solvent soak tanks away from heat sources Use high solids coating formulations Use powder coatings Use water based coating formulations Use UV cured coating formulations

Reference Facility Pollution Prevention Guide US Environmental Protection Agency Office of Research and Development Washington D C May 1992

10

Exhibit 4-1
Pollution Prevention Summary - Painting Industry (Continued)

Waste Origin/Type	Pollution Prevention and Recycling Methods
Equipment Cleanup Wastes Process equipment cleaning with solvents	Use light to dark batch sequencing Produce large batches of similarly coated objects instead of small batches of differently coated items Isolate solvent based paint spray booths from water based paint spray booths Reuse cleaning solution/solvent Standardize solvent usage Clean coating equipment after each use
Source Reduction	Reexamine the need for coating as well as available alternatives Use longer lasting plastic coatings instead of paint

Reference Facility Pollution Prevention Guide US Environmental Protection Agency Office of Research and Development Washington D C May 1992

CHAPTER 5
CASE STUDIES IN METAL FINISHING

This chapter includes 1) a review of pollution prevention opportunities in metal finishing in rapidly industrializing countries 2) an in-depth case study of a metal finishing facility and 3) other metal finishing case studies from other countries including the US

5 1 POLLUTION PREVENTION OPPORTUNITIES IN METAL FINISHING IN RAPIDLY INDUSTRIALIZING COUNTRIES

5 1 1 Introduction

This document presents the findings from five metal finishing pollution prevention (P2) assessments conducted in a rapidly industrializing country This first round of assessments indicates that significant pollution prevention opportunities exist in metal finishing industries

The P2 opportunities identified for each facility will result in a first-year net savings This means that the gross first year savings as a result of implementing the P2 opportunities will be higher than the total estimated investment If implemented the P2 options identified for the five facilities will save a combined total of $21 734 700 for the first year at a cost of $11 206 955 In addition to this economic benefit implementing P2 at each of these facilities will help increase plant efficiency product quality and worker productivity reduce exposure to toxic chemicals conserve water energy and raw materials and reduce the quantity of wastes generated and pollutants emitted

Assessments were performed at an office furniture manufacturing plant (Facility MB) a household appliance manufacturing plant (Facility MC) a vehicle assembly plant (Facility MA) an electric transmission line/industrial steel works manufacturing plant (Facility MS) and a longitudinal welded water pipe manufacturing plant (Facility MN) The two-letter facility identifier is used throughout the remainder of this section

Processes particularly conducive to pollution prevention include surface preparation plating, galvanizing and painting Pollution prevention opportunities identified in each of these areas at the five plants are provided in this document

5 1 2 Key Pollution Prevention Examples

The following examples highlight P2 opportunities that are directly transferable to the same processes at other metal finishing facilities They illustrate the economic benefit and increased plant efficiency associated with pollution prevention

5 1 2 1 Surface Preparation Preparation of the metal workpieces for painting electroplating or galvanizing is required at each of the five facilities assessed Surface preparation is needed to insure that metal pieces are properly cleaned and treated so that the coating will properly adhere to the part Sometimes an existing coating must be stripped first This is accomplished using either a physical or chemical process with chemical processes tending to be associated with more environmental problems because they contain VOC s and ODC s and must be disposed of when spent Cleaning and degreasing is conducted to remove contaminants from the surface of the metal such as oil grease dirt and metal chips

At Facility MB, metal parts are etched in a solution of sulfuric acid to prepare the part for electroplating The metal parts are also stored in the sulfuric acid etch tank for long periods of time (over 12 hours) An inhibitor is added to minimize corrosion caused by the lengthy time the part is in contact with the sulfuric acid solution By reducing the etching time (and eliminating the storage time), acid consumption would be reduced by at least 10 percent and the need for adding a corrosion inhibitor would be eliminated This would result in an approximate annual savings of $3 396 Since there is no cost associated with implementing this measure the payback period would be immediate

A continuous stream of water is also used at this facility to rinse parts both before and after electroplating Using an intermittent (as-needed) stream of water instead of a continuous stream of water may reduce water consumption by 10 percent or more This reduced water consumption rate (and in turn reduced wastewater generation) would result in a first year savings of approximately $8 490 at essentially no cost to the facility As a result the payback period would be immediate Additional use of flow restrictors and spray rinses in place of bath rinses would further reduce water consumption and wastewater generation

At Facility MS steel bundles are dipped in a pickling bath containing a hydrochloric acid solution They are immersed for several minutes to remove scale and rust prior to zinc fluxing and galvanization Acid solution is lost when the parts are removed from the bath This drag-out loss may be reduced by 15 percent if the parts are hung over the bath for two to three minutes to allow the acid to drip back into the bath Minimal or no cost would be required to implement this measure The increased drainage time would save $49 582 per year in reduced acid purchases

At Facilities MN and MS metal parts are prepared for galvanization by immersing the parts in a zinc chloride/ammonium chloride flux bath The flux creates a bond between the iron atoms and the zinc chloride The reaction produces iron oxide which degrades the bath and contaminates the

work pieces as they leave the bath Once in the zinc galvanization bath the iron oxides form hard zinc which is a waste Installing a pump and filter at Facility MN for the flux tanks could reduce the hard zinc waste generated by 50 percent This would in turn reduce the amount of fuel needed to melt the hard zinc in the galvanization bath and improve the overall efficiency of the zinc galvanization process The pump and filter would cost $44 148 and would result in an annual fuel savings alone of $108 673 The payback period for the pump/filtration system would be 5 months

5 1 2 2 Electroplating At Facility MB depending upon their use metal parts may be either chrome or zinc electroplated The parts are in turn rinsed with water after each plating step Undercoats of copper and nickel are plated prior to chrome plating which is the final finishing step There are only minimal process chemical controls for the plating baths which contribute to the bath degradation This in turn shortens the useful life of the baths by allowing build-up of pollutants Installing a Hull Cell will extend the life of the baths by controlling the processes that degrade the bath It was assumed that using the Hull Cell would result in a 5 percent reduction in annual chemical consumption This in turn would result in a first year chemical savings of $21 735 at a cost of $1 698 The payback period for this P2 opportunity would be one month

Parts were also observed to be rapidly removed from the nickel plating tanks and dripped onto the floor To conserve nickel it was recommended that Facility MB install drain bars to collect the drippings It was estimated that drain bars would save 80 percent of the drag-out previously lost which represents a cost savings of about $20 376 during the first year Installation of the drain bars would cost $5 094 resulting in a payback period of only 3 months

As previously indicated copper is used as an undercoat for the nickel/chrome electroplating process This undercoat may not be necessary if the parts are properly cleaned Eliminating the copper plating step would save $12 225 per year in chemical purchase costs

5 1 2 3 Painting Workers at Facility MA apply underbody coating primer and topcoat to car bodies manually using spray guns The over spray is drawn by air down into the water basin beneath the cabin The over spray is collected and disposed of as a waste It was recommended that this facility install a primer and a topcoat over spray capture and recycle system with a capture efficiency of up to 98 percent Recycling 98 percent of the over spray would replace the purchase of approximately $512 803 worth of primer and $573 931 worth of topcoat per year for an estimated investment of $577 327 for each coating The payback period for this equipment would be 14 and 13 months respectively A similar system was also recommended for the manual painting operation at Facilities MC and MB

It was also recommended that Facility MA also use high-solids paints with spray guns specifically designed to atomized these paints This new system would help increase the transfer efficiency of their manual paint system by 50 percent which in turn would save $2 350 064 per

year in paint purchases The total estimated cost of implementation was estimated to be $339 604 resulting in a 3 month payback period

At Facility MB it was recommended that operators continuously monitor the thickness of the coatings applied to help avoid over consumption of paint Conservatively it was assumed that the use of an Elco meter or equivalent device to monitor coating thickness) would result in a 10 percent ($219 724) savings in paint consumption per year at a purchase cost of only $1 698 It was further estimated that the total cost of implementation (purchase labor cost etc) would be $67 920 resulting in a 4 month payback period

5 1 2 4 Galvanizing Facilities MN and MS use molten zinc baths to galvanize metal parts At Facility MN it was discovered that the actual coating thickness on the metal parts is 50 percent higher than that documented in the international standards As a result it was recommended that gauges be purchased and used to monitor coating thickness and to control the residence time of the parts in the zinc baths By so doing it was estimated that an annual savings of $6 792 094 in zinc consumption costs could be realized at a total cost of $339,604 This results in a one month payback

As previously indicated, metal parts at both Facility MN and Facility MS are placed in a zinc chloride flux bath to prepare the parts for galvanizing The flux creates a bond between the iron atoms and the zinc chloride This reaction produces iron oxide which degrades the bath and contaminates the work pieces as they leave the bath Once in the zinc galvanization bath the iron oxides form hard zinc Zinc ash also forms on the surface of the galvanization baths Currently both hard zinc and zinc ash are sold offsite At Facility MS it was recommended that two zinc smelters be installed onsite to recover the hard zinc as well as zinc ash and zinc dust (Zinc dust is zinc that falls on the floor when excess coating is removed from the part by striking the object while it is still hot) It was estimated that the total smelter system investment would be $1 647 082 and result in a zinc consumption savings of $2 462 134 per year A maximum payback period of 11 months would result from the installation and use of these two smelters

The key examples of P2 opportunities for the five metal finishing facilities are summarized in Exhibit 5-1

Exhibit 5-1
Summary of Pollution Prevention Opportunities at 5 Metal Finishing Plants

Name of Facility	Unit Operation	Pollution Prevention Option	Health and Environmental Benefits	Cost to Implement US$	Financial Benefits US$	Payback Period
MB	*Surface preparation* Etching	Standardize the use of sulfuric acid and eliminate the use inhibitor	Minimizes pollutant concentration in wastewater	0 00	3 396	immediate
MB	*Surface preparation* General water use in plating areas	Change to non continuous rinsing	Minimizes wastewater	0 00	8 490	immediate
MS	*Surface preparation* Pickling	Reduce acid drag out from pickling tanks through increased acid drainage prior to rinsing	Reduces quantity of acid used Reduces acidity of wastewater discharged	0 00	49 582	immediate
MN	*Surface preparation* Fluxing	Pump and filter flux bath	Reduce the generation of hard zinc ' sludge in the molten zinc baths Reduce the on-site burning of fuel used to refine ' hard zinc ' Reduce zinc losses by over-applying coating thickness	44 148	108 673	Less than 5 months
MB	*Electroplating*	Purchase a Hull Cell for process control	Minimizes pollutant concentration in wastewater	1 698	21 734	1 month
MB	*Electroplating* Nickel	Install a drain bar to reduce Nickel solution drag out	Minimizes pollutant concentration in wastewater	5 091	20 376	3 months
MB	*Electroplating* Copper	Eliminate the use of copper cyanide	Eliminates the use of toxic substance	0 00	44 012	immediate

Name of Facility	Unit Operation	Pollution Prevention Option	Health and Environmental Benefits	Cost to Implement US$	Financial Benefits US$	Payback Period
MA	*Painting*	Switch from water curtain capture system for thermo-set paint to dry capture and recycle system	Eliminate 15 000 M^3 per year of topcoat and primer contaminated water substantially reduces paint waste	1 154 655	573 931 (topcoat savings) 509 407 (primer savings)	13 months (topcoat) 14 months (primer)
MA	*Painting*	Use high solids paint along with special guns and drive systems to atomize paint	Reduces VOC emissions by 8 5 tons/year, reduce paint consumption by 14 tons/year	339 604	2 350 064	3 months
MB	*Painting*	Monitor coating thickness	Reduces paint use or loss	67 920	220 743	4 months
MN	*Galvanizing* Zinc	Leave the work pieces in the zinc tanks for less time Purchase and use thickness gauges to help control the residence time in the zinc baths	Reduces the consumption of zinc	339 604	6 792 094	1 month
MS	*Galvanizing* Zinc	Recover zinc from solid waste of the galvanizing process These wastes are a) hard zinc b)zinc ash c) floor dusts	Reduces raw material usage (zinc) Minimizes waste zinc Reduces worker exposure to zinc dust	1 647 082	2 462 134	up to 11 months

5 1 3 Plant Descriptions

Plant descriptions and brief process flow diagrams for each of the 5 plants assessed are provided in the following section The section also includes a summary of the costs and savings associated with the P2 opportunities recommended for each plant

5 1 3 1 Facility MB Facility MB opened in 1939 with the production of metal furniture for use in the office home and medical related facilities The facility covers over 33 500 square meters and produces over 107 000 desks chairs and cabinets annually Furniture production processes include fabrication surface preparation electroplating and painting The plant is a public facility with 1500 employees 1000 of whom work in manufacturing Facility MB could save in excess of $3 396 047 per year by implementing the 18 pollution prevention measures identified in the assessment Savings would be derived primarily from decreased waste of raw materials and reduced capacity and cost of wastewater treatment Estimated cost of implementation of all recommended P2 options is about $1 358 418 The process flow for the metal finishing operation for painting and electroplating at Facility MB is as follows

Painting
degreasing ⇨ rinsing ⇨ phosphating ⇨ passivating ⇨ drying
⇨ automated electrostatic painting ⇨ manual painting ⇨ drying

Electroplating - Nickel and Chrome
degreasing ⇨ cleaning ⇨ drying ⇨ polishing ⇨ degreasing ⇨ rinsing ⇨ etching and passivating ⇨ copper plating ⇨ rinsing ⇨ nickel plating ⇨ rinsing ⇨ chrome plating ⇨ rinsing ⇨ welding

Electroplating - Zinc
etching ⇨ cleaning ⇨ drying ⇨ polishing ⇨ degreasing ⇨ rinsing ⇨ zinc plating ⇨ rinsing ⇨ passivating ⇨ rinsing

5 1 3 2 Facility MC Facility MC is a private sector company that was founded in 1986 It is part of a five-company industrial group which employs 1 600 people The facility manufactures and markets a variety of household appliances such as washing machines electric water heaters and gas cookers The plant operates one 8 hour shift five days per week 240 days per year

Facility MC could save over $339,604in the first year with an initial capital investment of $322 624 by implementing the 7 pollution prevention measures identified in the assessment The recommended P2 options will 1) recover 1 500 kg of waste paint per year and recycle it back to into the process 2) reduce annual water consumption by 32 600 M^3 3) reduce the capital cost for any future wastewater pre-treatment station 4) reduce the damage to the sewer system 5) reduce the use of acids and alkalis by 4 700 kg of waste per year, and 6) reduce the amount of toxic and

hazardous waste in the wastewater and paint sludge The process flow for the metal finishing operation for painting and enameling at Facility MC is as follows

Painting line
degreasing ⇨ rinsing ⇨ phosphate treatment ⇨ rinsing ⇨ drying ⇨ electrochemical deposition ⇨ washing ⇨ drying ⇨ spray painting ⇨ drying

Enameling line
degreasing ⇨ rinsing ⇨ acid pickling ⇨ rinsing ⇨ neutralizing bath ⇨ drying ⇨ enameling ⇨ drying ⇨ enameling furnace

5 1 3 3 Facility MA Facility MA is a vehicle assembly firm established in 1976 as a joint with Chrysler The company assembles treats and paints various types of automobiles In 1994 the company assembled 2 000 Cherokees 500 JEEP 4x4s and 1500 Peugeots The plant operates 5 days per week, 8 hours per day Approximately 70% of the vehicle components are imported from the parent companies the remaining parts are obtained from local manufacturers

A total of 11 pollution prevention opportunities were identified for Facility MA related to metal parts preparation and finishing Cumulatively these opportunities would require an initial investment of $4 387,692 if implemented, and would bring about an estimated financial benefit of $6 046 661

The process flow diagram for the surface preparation and painting operations at Facility MA is as follows

Surface Preparation
manual degreasing ⇨ degreasing ⇨ spray rinse ⇨ phosphating ⇨ spray rinsing ⇨ passivating ⇨ de-ionized spray rinsing ⇨ drying

Primer
closing holes (manually) ⇨ underbody primer application ⇨ body primer application ⇨ drying ⇨ cooling ⇨ quality control ⇨ sealing ⇨ anti-corrosion application ⇨ drying

Color painting
preparation ⇨ color paint application ⇨ flash off ⇨ baking ⇨ quality control ⇨ sound deadener underbody paint

5 1 3 4 Facility MS Facility MS galvanizes steel structures with zinc for the manufacture of electric transmission towers and steel works for industrial buildings factories and overhead cranes steel pipes fixtures and hardware Approximately 8 000 tons of steel pieces are

galvanized annually The facility operates three shifts per day six day per week and has 200 employees The 11 pollution prevention options identified in the assessment will save the facility up to $3 545 473 during the first year at a total estimated investment of $2 380 628 This corresponds to a payback period of 4 months Savings accrued from the pollution prevention actions identified in the assessment result from 1) recovering 260 metric tons of waste zinc per year and recycling it back into the process saving approximately $2 462 134 per year 2) reducing the quantity of hydrochloric acid used by 15% or 40 tons per year 3) reducing the cost of water used by approximately $21 055 per year or about 50% of the current cost 4) significantly improving the quality of the galvanized product and 5) improving worker health and safety by reducing the presence of toxic vapors and other hazards

The process flow for galvanizing operations at Facility MS is as follows

pickling ⇨ washing ⇨ fluxing ⇨ galvanizing

5 1 3 5 Facility MN Facility MN manufactures longitudinal welded water pipes The water pipes are available in black steel or are galvanized The facility has 650 employees, 600 of which are technical or are laborers The 10 pollution prevention options identified would save the facility at least $8 116 552 in the first year and would require a total implementation cost of $2 710 045 The pollution options identified would help to 1) eliminate the dumping of hydrochloric acid wastes, 2) reduce the on-site consumption of fuel and the generation of zinc fumes from secondary refining 3 reduce the dumping of cooling fluid and 4) reduce the consumption of zinc

The process flow for the zinc galvanization operations at Facility MN is as follows

pickling ⇨ washing ⇨ fluxing ⇨ galvanizing

5 2 CASE STUDY 1· EP3 EXPERIENCE IN METAL FURNITURE MANUFACTURE

5 2 1 Executive Summary

This assessment evaluated an office furniture manufacturing facility in Egypt The objective of the assessment were 1) identify pollution prevention actions that would reduce the quantity of toxics raw materials and energy used in the manufacturing process 2) demonstrate the environmental and economic value of a comprehensive pollution prevention assessment 3) improve manufacturing competitiveness and product quality and 4) improve the health and safety inside the plant The assessment team was comprised of a US pollution prevention expert and four local professionals

80

Eight pollution prevention opportunities were identified for the facility The one-time cost to implement these measures is about $1 186 918 with an additional annual cost of $111 050 These measures would result in a financial benefit of $3 604 224 per year resulting primarily from decreased waste of raw materials The environmental benefits are also substantial The facility would be able to totally eliminate the use of two highly toxic substances reduce the consumption and discharge of sulfuric acid chromic acid and nickel and reduce water use by 30% Furthermore implementing these measures would help the facility decrease the cost of installing and operating an expensive wastewater treatment plant that is currently mandated by government environmental regulation

5 2 2 Facility Background

The facility covers an area of approximately 33 500 square meters The plant produces two basic lines of office furniture furniture with chrome-plated tubular legs (60%) and steel shell furniture (40%), including file cabinets and metal desks It has a product line of over 200 items most of which are made of steel and either painted or electroplated These products are marketed to public service establishments and the local market In 1993 over 150,000 units were sold The plant is a public sector facility with 1500 employees, 1000 of whom work in manufacturing

5 2 3 Manufacturing Process

The manufacturing operations consist of three unit operations areas fabrication painting and electroplating The raw materials used in production are metal sheets and tubes paint electroplating materials and upholstery material

In the fabrication process steel sheets are cut to predetermined sizes depending on the piece being made and bent or pressed into the desired shape Some of these pieces are then welded together The parts then proceed on to either a painting step or an electroplating step

The plant has two painting lines The first is automated using electrostatic equipment liquid paint with manual touch up The second line uses standard manual air guns Prior to painting parts are first cleaned/degreased phosphated passivated and dried The plant has two different phosphating lines which produce a large portion of the wastewater from this facility Once painted the pieces are hung to dry on hooks

The plant electroplates with either nickel/chrome or zinc All electroplating operations are manual Parts to be electroplated undergo a series of steps before electroplating including cleaning polishing and degreasing The electroplating process used in this plant is relatively standard and follows a series of steps including polishing and grinding degreasing rinsing etching and plating

5 2 4 Environmental Problems

The key environmental problems associated with this facility are 1) discharge of highly contaminated untreated water (caustics phosphates sodium nitrate sulfuric acid and sodium carbonate) directly to sewer 2) discharge of plating solution (copper cyanide sodium cyanide sulfuric acid chromic acids) and 3) solvent loss from paint thinner which affects worker health

5 2 5 Pollution Prevention Opportunities

This assessment identified eight pollution prevention opportunities that if implemented would result in significant economic and environmental benefits for the facility Exhibit 5-2 lists the recommendations and presents the environmental benefits and financial cost for each

Exhibit 5-2
Pollution Prevention Opportunities in Furniture Manufacturing

Operation	Pollution Prevention Option	Health and Environmental Benefit	Cost US$	Financial Benefits US$/yr	Payback Period
Cleaning	Replace sulfuric acid and benzene with alkaline solution	Reduction in sulfuric acid and benzene released to environment	70 977/yr	--	
Cleaning	Clean parts properly	Elimination of copper cyanide use	0	12 225	Immediate
Etching	Standardized sulfuric acid use eliminate use of inhibitor	Reductions in sulfuric acid and inhibitor released to environment	0	3 396	Immediate
Electroplating	Improve process parameter	Reduction of pollutants in wastewater	1 698-40 752/yr	44 148	1 year
Electroplating	Reduce process solution loss	Reduction of pollutants in wastewater	42 450	Not determined	10 5 months
Electroplating	Replace zinc cyanide with zinc chloride	Elimination of zinc cyanide use	67 920	25 470/yr	N/A
Electroplating	Improve water-use practices	Reduction in wastewater generation	5 094	3 396 047	2 5 months
Painting	Improve paint application	Reduction in paint loss	1 069 754	3 599 809	4 months
TOTAL			**1 186 918 (one time) 111 254/yr**		

5 2 5 1 Replace Sulfuric Acid and Benzene with Alkaline Solution for Cleaning The current cleaning and degreasing process uses a sulfuric acid bath followed by manually wiping the part with benzene An alkaline based cleaner can be used as a substitute for both While switching to an alkaline solution will cost an additional 70 298/yr, the benefits are improved product quality and a reduction in the amount of harmful chemicals discharged to the environment

5 2 5 2 Standardize Sulfuric Acid and Eliminate the Use of Inhibitors Parts are kept in etching tank filled with sulfuric acid solution for long periods of time (up to 48 hours) In order to prevent corrosion, an inhibitor is added Standardization of sulfuric acid use will eliminate the need to purchase inhibitor and improve product quality Annual savings are $3 599 In addition instead of storing parts in the etching tank as currently done another location should be found to store the parts

5 2 5 3 Eliminate the Use of Copper Cyanide The use of copper cyanide as an undercoat for electroplating is unnecessary if proper cleaning is part of the preparation process Eliminating this process solution protects worker health and the environment by eliminating a toxic substance from the manufacturing process There is no cost associated with implementing this option annual savings are $12 225

5 2 5 4 Improve Process Parameters The current quality of the electroplating process is poor In order to improve the process it is suggested that laboratory analysis of process solutions be performed every thirty days and a Hull cell be purchased to control process parameters Implementing measures will reduce pollutant concentration in the wastewater produced Implementing these measures will cost $1 698 and 40,752/year for laboratory fees annual savings are $44 148

5 2 5 5 Reduce Loss of Process Solution During Electroplating (nickel/chrome) The current nickel/chrome electroplating process is not optimal and large amounts of process solution are lost in the drag out process This contaminates wastewater and results in poor quality product A bar and chain hoist can be installed for extended drainage time over solution tanks and the tanks can be moved closer together to catch more drag out Extending drainage time from 3 seconds to 10 seconds can save as much as 80% of the wasted process solution The cost to implement these measures is $42 450 with a yearly savings of $47 544

5 2 5 6 Replace Zinc Cyanide with Zinc Chloride The use of zinc cyanide in electroplating is declining because of environmental concerns Alternatives should be explored which while more expensive have higher plating rates and more brightness Replacing the current system with one based on zinc chloride will cost $67 920

5 2 5 7 Improve Water-use Practices Water use at the plant is not monitored and no work has been done to determine the amount and quality of water needed for adequate rinsing To reduce the amount of wastewater generated, the required water quality needed for electroplating should be determined flow restrictors installed and spray rinses used The cost of implementation is $5 094 with a resulting yearly savings of $25 470

5 2 5 8 Improve Paint Application Techniques Painting at this facility is performed both manually and using an automated system In both painting lines there are opportunities to reduce paint losses from overspray For the automated system the recommendations to optimize the painting process include adjusting the target to gun distance and angle, pressure of the air to paint ratio of the gun paint consistency, and activating the sensors that control the range of motion of the systems' robot arms For the manual painting system high-volume, low-pressure paint spray units should be used for higher paint-use efficiency

The assessment also examined several options that would help recover the overspray produced in the painting process It was suggested that the plant investigate paint reclaim/recycle

84

systems stagger parts on the painting lines to catch some of the overspray and to monitor the coating thickness to avoid over application that results in waste These recommendations would result in a reduction in the amount of paint used or wasted The total cost of implementation is $1 069 754 with a corresponding yearly savings of $3 470 760

5 2 6 Conclusion

Adopting the pollution prevention opportunities identified herein will have a number of benefits for this facility 1) increase product quality 2) improve worker health (especially in the electroplating area) 3) save the facility approximately $3 396 047/year and 4) reduce investment in pollution control Under a new environmental law the plant will be required to install a wastewater treatment system While pretreatment of the wastewater will still be necessary due to its highly toxic nature installation and operation costs can be reduced significantly if the recommended pollution prevention measures are implemented

5 3 CASE STUDY 2. EP3 EXPERIENCE IN ELECTROPLATING

Summary

This assessment evaluated an electroplating facility The objective of the assessment was to propose a program of pollution prevention that would (1) reduce the quantity of toxics raw materials and energy used in the manufacturing process, thereby reducing pollution and worker exposure, and (2) demonstrate the environmental and economic value of pollution prevention methods to the electroplating industry and improve operating efficiency and production quality

The assessment was performed by an EP3 team comprised of an expert in electroplating and a pollution prevention specialist

Overall the assessment identified 18 pollution prevention opportunities at this facility Recommendations for pollution prevention include replacing the solvent degreaser with an alkaline cleaner improving process solution monitoring and capturing and returning 100 percent of chromium dragout to the process solution

5 3 1 Facility Background

This facility is an electroplater that performs zinc nickel brass and chrome plating Seventy percent of production is comprised of brass articles The facility operates with 23 workers who work in a single 8-hour shift 300 days a year Approximately 15 m^3 of metal surface is finished per day

5 3 2 Manufacturing Process

Facility operations can be divided into five main steps (1) polishing, (2) cleaning (3) racking (4) electroplating, and (5) gilding

Parts are first polished Polishing paste is applied to stationary belt sanders to provide the necessary abrasion The parts are then polished with the sanders Dust generated by the polishing process is collected by vacuums connected to each machine

Prior to electroplating, many parts are cleaned in a vapor degreaser that uses trichloroethylene (TCE) to remove grease and other impurities Parts removed from the degreaser are dried with paper towels

The facility electroplates many different kinds of parts Several parts are hung on special racks that are constructed specifically to handle the part Other pieces are plated in baskets that are placed directly in the solutions

The electroplating line consists of washing tanks rinsing tanks and nickel and chrome plating and recuperation baths A copper cyanide bath is located across from the line and is used to plate zamak before it is plated to nickel and chrome All plating is manual Times are not exact there is considerable variation in soaking times among different parts and different workers

Before gilding parts are rinsed in special rinse baths They are then immersed in gilding solution for less than a minute

5 3 3 Existing Pollution Problems

At the time of the assessment there were a number of pollution problems including (1) polishing debris (2) the use of organic solvents for degreasing, (3) acid dip contamination (4) inefficient cyanide electroplating (5) unnecessary chrome and nickel waste and (6) excessive water use

5 3 4 Pollution Prevention Opportunities

The assessment identified 18 pollution prevention opportunities that could address the problems identified above with significant environmental and economic benefits to the facility Table 1 lists the recommended opportunities for the facility and presents the environmental benefits and implementation costs for each

5 3 4 1 Polishing Debris As currently performed the polishing process leaves considerable debris (consisting of a mixture of polishing compound and solids from the polishing wheel) inside the pieces These deposits cannot be removed by scraping or wiping

To alleviate this problem, the facility can take several steps Reducing the amount of polishing compounds used will reduce the amount of debris Removing visible residue will allow less debris to harden on the pieces Reducing the time between buffing and cleaning will also allow less debris to harden on the pieces Lastly, employing a polishing compound that is compatible with alkaline cleansers will improve the efficiency of the cleaning process (along with recommendations outlined in the next section)

5 3 4 2 Degreasing The facility currently employs the chlorinated solvent TCE to degrease parts TCE is highly toxic and chemically reactive, and has been linked to liver cancer and ozone depletion Parts can be cleaned equally well, or better, through the use of aqueous alkaline cleaners Thus the facility can greatly reduce its environmental impact and improve product quality by implementing an alkaline cleaning system Further, the alkaline system is more cost effective than the TCE system A $5,000 investment will yield savings (from eliminated solvent purchase) of $12,000 per year

5 3 4 3 Acid Dips In this facility's plating process an acid dip (usually 10 percent sulfuric acid) is used to remove any oxides that may have developed on the brass or steel surface With time copper and organic contamination accumulates in the acid bath If more than 300 mg/L of copper is present in the acid dip the bath can cause adhesion problems for the steel substrate Further copper contamination also impacts the nickel electroplating solution While the facility utilizes nickel depassivation to remove the copper contamination, it is not efficient wasting nickel brightener and energy

Separate acid dips for steel and brass substrates will improve the quality of both the steel substrate cleaning and the nickel electroplating solution and hence reduce the number of rejects the facility produces Additionally, by employing tighter process control over the acid dips the facility will save $816 a year in reduced solution cost

5 3 4 4 Inefficient Cyanide Electroplating Cyanide electroplating cannot be eliminated at this facility because the known non-cyanide alkaline alternatives do not function well in this

application However improved process control and solution monitoring could enhance product quality and hence reduce the number of rejects the facility produces

5 3 4 5 Unnecessary Nickel and Chrome Waste Currently the facility purifies the nickel bath six times per year By improving process control and purifying the nickel bath only once per year the facility should save between $4 100 and $5 900 a year from recovered nickel solution

The lost chrome solution is only valued at $180 per year However, if 100 percent of this chrome could be captured the facility would not have to install expensive chrome waste treatment required by the facility's government A porous pot purification system (priced between $500 and $1,000) is capable of removing the chromium from the waste water While the expected costs of meeting chromium discharge limits have not been determined they are sure to be greater than the cost of the purification system

5 3 4 6 Excessive Water Use Waste water is generated in significant volumes from the facility's rinse steps Some fairly simple changes can be made that will reduce water use by 25 percent The use of air or solution agitation would increase the efficiency of the rinses, and reduce the frequency of changes Spray rinses would also be more efficient than the current practice Lastly water inputs should be installed with switches that turn off the inputs after a set period of inactivity For an investment of less than $100, the facility should save $1,728 a year from reduced water usage

5 4 CASE STUDY 3 METAL RECOVERY - DRAGOUT REDUCTION

Summary

Company	New Dimension Plating Inc Hutchinson Minnesota
Product or Service	Job shop plating a variety of items including motorcycle stove and exercise equipment pans
Hazardous Waste	Concentrated dragout solution and dilute rinse water with metal and other contaminants
Original System	Pretreatment system using sodium metabisulphite and hydroxide precipitation to remove chromium from wastewater

New System	Modifications in process before reaching existing pretreatment system changes comprised of a spray rinse before the stagnant rinse evaporators to reduce plating tank volume and concentrate the stagnant rinse and an electropurification unit installed in the chromium plating tank
Installed Cost	Approximately $2 900
Results	Recovery of chromium for reuse reduction in volume of sludge lowered treatment chemical costs

5 4 1 Introduction

New Dimension Plating is an electroplating job shop employing about 40 people in Hutchinson Minnesota Although they plate a variety of metals, including gold and brass, most of the plating is chromium with copper and nickel as undercoats

Hazardous waste results from plating tank dragout, consisting of a significant amount of chromium and smaller quantities of nickel, chlorine, and copper

The original system used a stagnant rinse tank and three countercurrent rinses to remove the excess chromium solution The initial stagnant rinse tank would receive a large portion of the chromium the content of this rinse would later be returned gradually to the plating tank to replace evaporated solution Wastewater from the first, most concentrated rinse in the countercurrent rinse series drained to the plant's pretreatment system for removal of chromium through sludge production (See Exhibit 5-3)

New Dimension Plating was meeting current regulations for wastewater discharge but the operation of the system was very expensive The company wanted to reduce chromium waste and cut treatment chemical cost but maintain a high level of plating quality

Exhibit 5-3
Original System

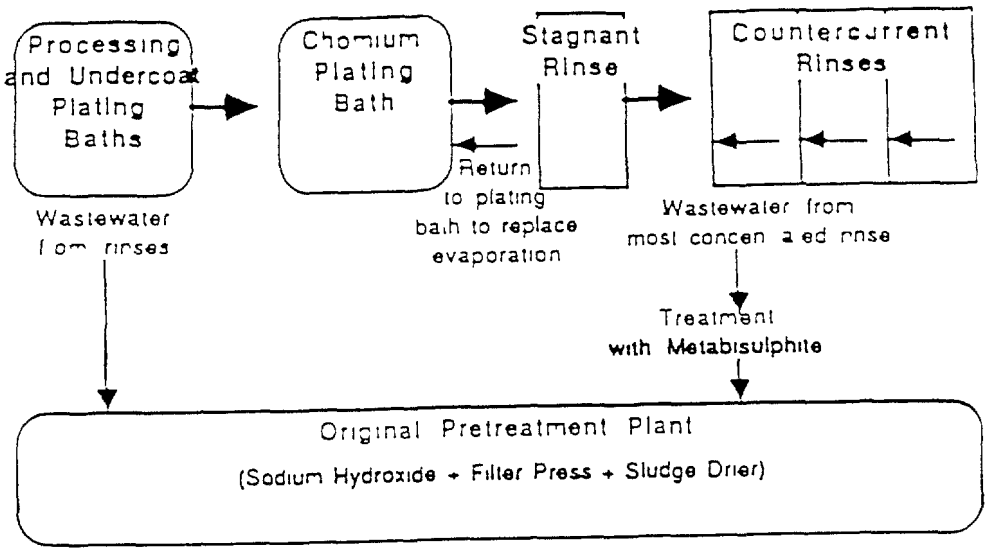

5 4 2 Basis for Design

New Dimension Plating wanted to redesign its plating operation and hazardous waste pretreatment system to meet the following goals

- maintain high quality of plating
- reduce the amount of chromium dragged out of plating bath
- reduce chromium in plating bath
- reuse sludge production
- reduce treatment chemical use

5 4 3 Methods and Materials

To reduce the amount of chromium dragout *New Dimension Plating* selected a drip bar in a spray rinse tank *New Dimension* built the spray rinse ring and drip bars in the original stagnant rinse tank This system allows the company to gain the benefit of reduced dragout through longer drip time yet avoids the possibility of staining Through adjustment of the size of nozzles and length of spraying time the amount of rinsewater solution can be controlled With increased evaporation from the chromium tank all of this solution can be returned to the plating tank each day thereby reducing the amount of dragout that continues through the rinse system (See Exhibit 5-4)

As a result of the new system the amount of chromium dragout into the stagnant rinse tank was reduced from seven pounds to one pound daily

The first of the three original countercurrent rinse tanks was converted to a stagnant rinse and the last two were combined into one large continuous rinse

Evaporators were built by *New Dimension* to reduce the volume of water in the plating tank and the stagnant rinse tank to allow all of the spray rinse solution and some of the stagnant rinsewater to be returned to the tank each day

An electropurification module was installed directly into the plating bath to remove contaminants from the returned dragout solution without interruption of the plating process *New Dimension Plating* chose the Model PPS2 porous pot chrome solution purifier manufactured by Hard Chrome Plating Consultants of Cleveland Ohio The company is completely satisfied with the functioning of this unit It is felt that similar results could be obtained with this type of unit from other manufacturers

Exhibit 5-4
New System

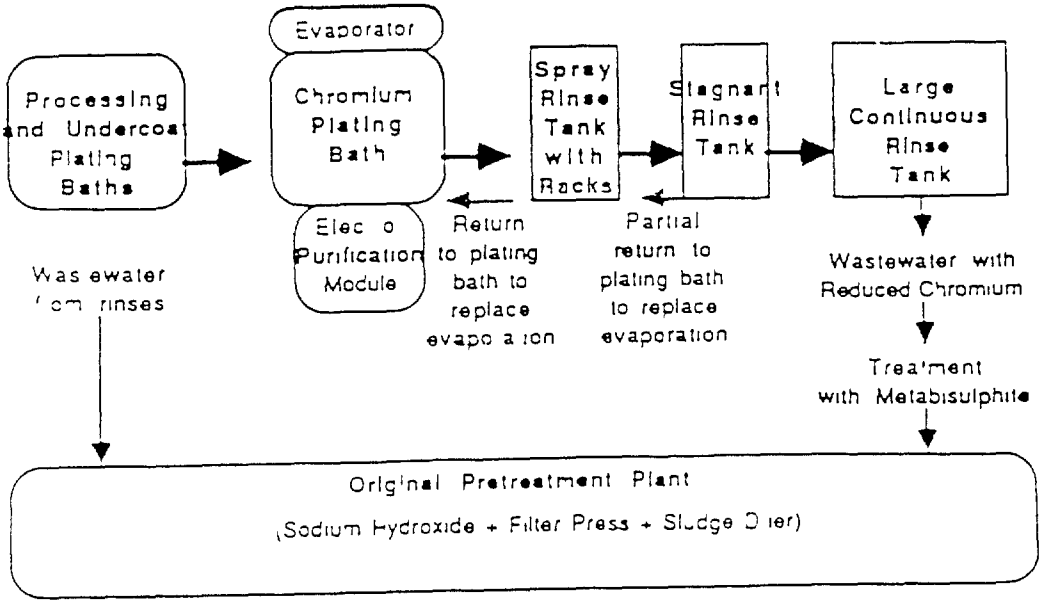

91

5 4 4 Economics

Listed below is the approximate cost of the new equipment

Evaporators	$1 000
Pumps	1 000
Spray nozzles racks	50
PPS2 Purifier	350
Installation	500
Total Cost	**$2 900**

The operating cost of the new system is minimal, with no added cost for utilities or supplies Additional labor consists of approximately one hour every two weeks

5 4 5 Results and Discussion

Change	Results
Installation of spray rinse and drip bar in the existing stagnant rinse tank	This initial rinse following the chromium plating reduces dragout in the system because all of the rinsewater is returned to the plating tank
Conversion of counter-current rinses into one stagnant rinse and one large continuous rinse	The new rinse system reduces water flow from 1 2 gpm to 1 0 gpm The larger rinse tank makes rinsing of large parts more efficient
Installation of electropurification unit (the Model PPS2 porous pot chrome solution purifier) in the chromium plating tank	The unit allows reuse of the dragged out chromium by removing contaminants from the rinsewater returned to the plating tank

By using a spray rinse system with a drip bar following the chromium plating bath, *New Dimension Plating* has reduced dragout from seven pounds to one pound daily Combined with in-tank electropurification of metal contaminants, this reduction in dragout results in reduced sludge production and an estimated $7 000 in savings from chromium and treatment chemical purchase *New Dimension* has been quite satisfied with the results of the new system The company will investigate ways of further reducing water use in the future

92

5.5 CASE STUDY 4 METAL RECOVERY - ION EXCHANGE/ELECTROLYTIC RECOVERY

Summary

Company	Midwest Finishing, Inc Coon Rapids Minnesota
Product or Service	Job shop electroplating including gold and silver plating with copper and nickel undercoats for the electronics industry
Hazardous Waste	Effluent with metal contaminants and cyanide
Original System	Wastewater pretreatment system using hydroxide precipitation
New System	Recovery system using ion exchange and electrolytic recovery before pretreatment using hydroxide pretreatment
Installed Cost	Approximately $250,000
Results	When fully operational, will keep the effluent in compliance with pretreatment regulations and replace the hydroxide precipitation system

5 5 1 Introduction

Midwest Finishing Inc Is an electroplating job shop employing 26 people in Coon Rapids Minnesota Founded in 1979 they specialize in gold and silver plating for electronics applications This precious metal plating requires that they also apply copper and nickel plating as undercoats (See Exhibit 5-5)

Hazardous waste results from plating bath dragout into the rinsewater Rinse streams consisted of continuous streams containing copper cyanide electroless nickel and electrolytic nickel and batch dumps with copper cyanide electroless nickel electrolytic nickel, tin tin/lead and acid copper To comply with wastewater pretreatment regulations *Midwest Finishing* installed a pretreatment system using hydroxide precipitation in 1981 (See Exhibit 5-6) This system was sized for a daily wastewater flow of 10 000 gallons However, by 1983 a 300% increase in business had pushed the daily wastewater flow to 55 000 gallons At this flow rate, it was

necessary to run the system 24 hours a day and even then it was difficult to comply with pretreatment regulations

Exhibit 5-5
Plating Shop Production Process

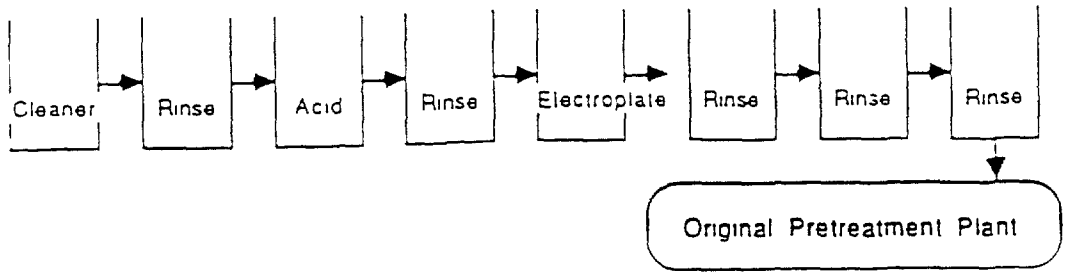

5 5 2 Basis for Design

Midwest Finishing needed to design and implement a wastewater pretreatment system which would meet the following objectives

- Meet standards established by the Metropolitan Waste Control Commission for effluent levels
- Decrease sludge production
- Recover materials (copper nickel and tin) from diluted rinse streams and concentrated batch dumps

Several stages of system development were planned and implemented

1. Conduct in-plant survey to characterize content of waste streams and batch dumps
2. For each waste stream, determine pH, flow rate, metal concentration and cyanide concentration
3. For each batch dump determine the type of dump quantity, concentration pH and frequency

04

4 Determine water balance for plant comparing total water use according to the meter to use determined by other measurement

Exhibit 5-6
Original Pretreatment System

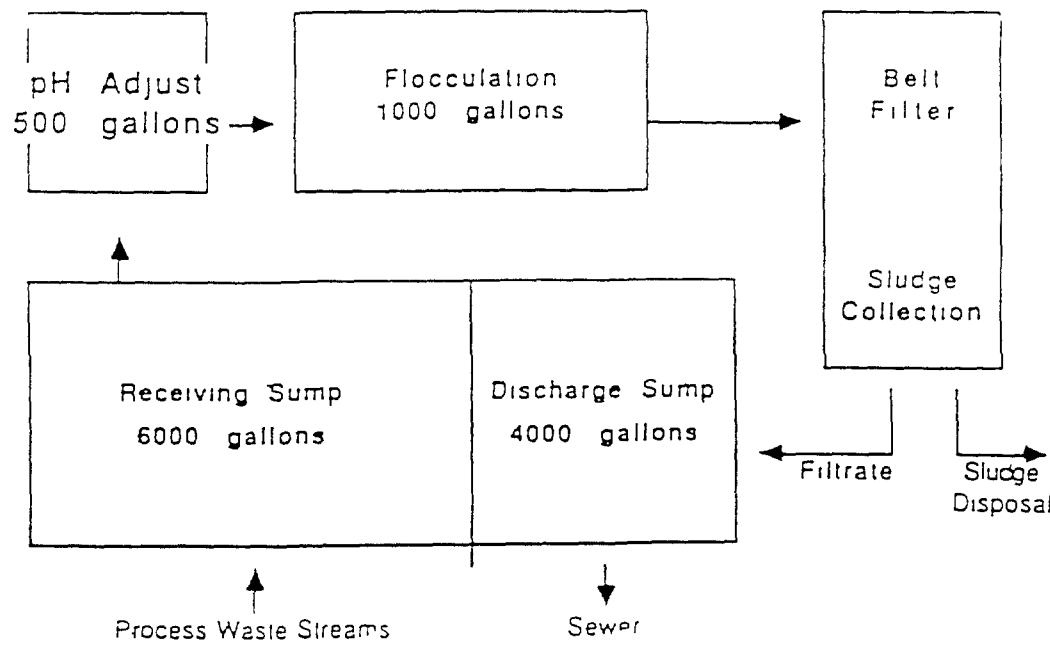

5 Segregate waste streams

6 Investigate equipment for reclaiming metals and reducing sludge Size of equipment was a key factor since space is limited

7 Interview vendors and observe equipment in operation

8 Purchase and install equipment

5 5 3 Methods and Materials

The search for pretreatment methods focused on metal recovery and sludge reduction

The metals recovery system selected (Exhibit 5-7) was designed and manufactured by E R Lancy Inc and installed by *Midwest Finishing* The choice of this particular vendor was based

95

on factors particular to Midwest Equipment produced by other manufacturers could be expected to produce similar results

Exhibit 5-7
New Metal Recovery System

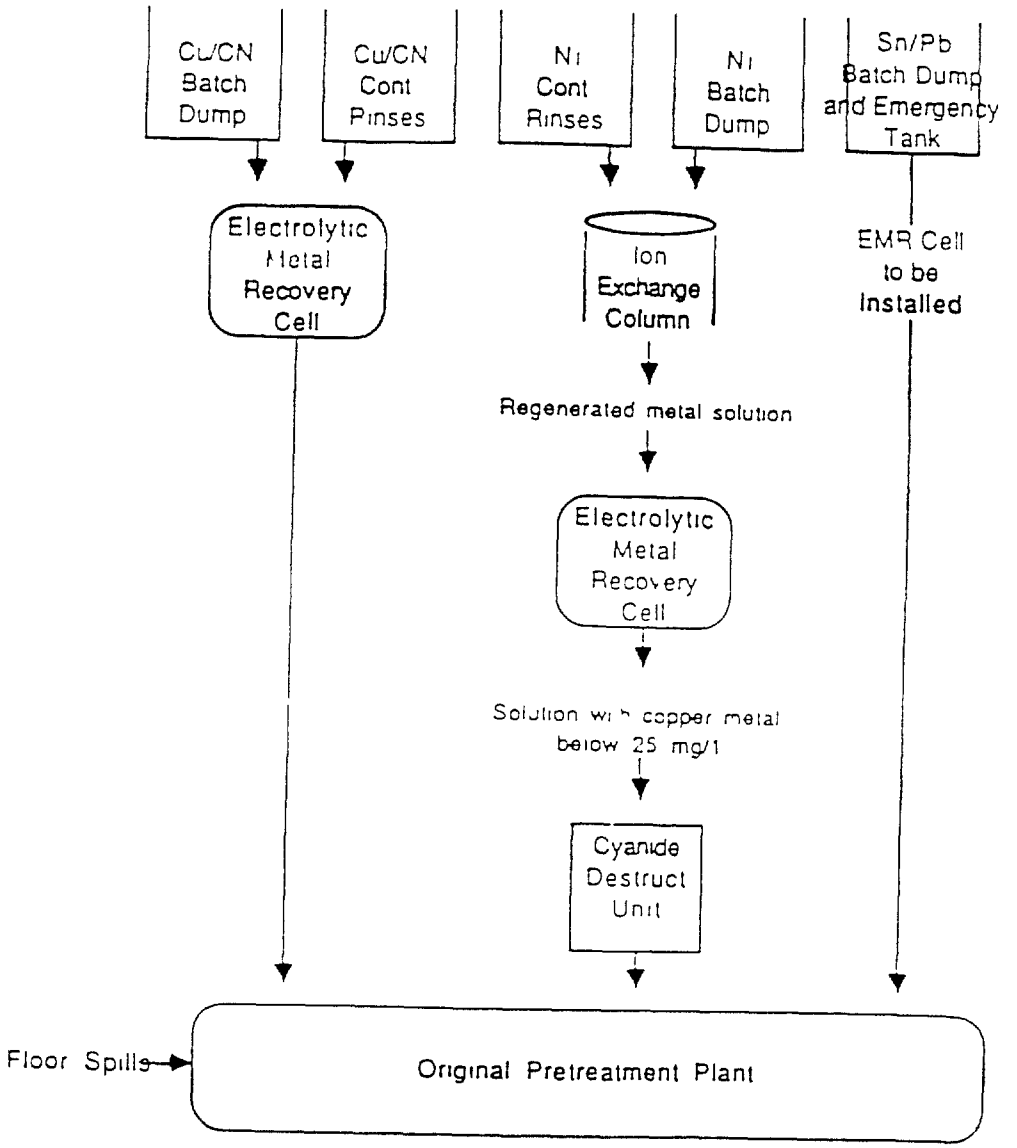

The redesigned pretreatment system functions as described below

1 After workpieces are immersed in the following process solutions static rinses are used and later combined with batch dumps Metals are recovered from the static rinses and dumps as indicated below

Process Solution	Recovery Method
Copper Cyanide	Electrolytic Material Recovery (EMR) Cell
Electroless and Electrolytic Nickel**	Ion Exchange
Tin/Lead	EMR Cell (When installed Dump now goes to original pretreatment plant)

** The first rinse (i e , the most concentrated rinse) in each countercurrent nickel rinse system is passed through the ion exchange column

The metal-rich solution resulting from regeneration of the ion exchange column is returned to the holding tank for nickel batch dumps for metal reclaim in the EMR cell

2 After reclaiming the metal ions above, pretreatment continues Outflow from the copper EMR cell is combined (when the copper metal concentration falls below 250 mg/L) with other cyanide rinses and is treated in the cyanide destruct unit

3 After the cyanide is destroyed this stream is combined with that from the ion exchange column and other shop solutions such as floor spills Any remaining metal in the combined waste stream is treated by hydroxide precipitation Wastewater that enters this stage of pretreatment typically has the following constituents

Contaminants with New System	Contaminants with Old System
Copper 89 mg/L	Copper 25 mg/L
Nickel 6 mg/L	Nickel 1 4 mg/L
Cyanide 02 mg/L	Cyanide 13 mg/L

Following segregation of waste streams and installation of process piping in holding tanks equipment features were added when the treatment operations were expanded A cycle timer and valves were installed to control the flow of all rinses The plating lines were expanded with the addition of static rinses and drain boards where appropriate

A room had been set aside as a waste treatment area when the original hydroxide precipitation equipment was installed This room proved to be inadequate for the new system The roof was raised to make room for holding tanks and proper placement of the clarifier The remainder of the equipment was installed in an adjoining room While not ideal the current arrangement has proven adequate

5 5 4 Economics

Listed below is the approximate cost of the new equipment

Ion exchange canister & resin	$25 000
EMR units including rectifiers (2)	20 000
Holding tanks	15 000
Cyanide destruct cell	7 500
Clarifier	20 000
Pumps and piping	20 000
Shipping	5 000
Installation & other modifications	125 000
New filter press	12 500
Total	**$250 000**

The following list approximates the operating cost for one year for the new system

Utilities	$4 150
Supplies	2 000
Amortization	25 000
Labor	26 000
Total	**$57 150**

5 5 5 Results and Discussion

The table below discusses some of the results of the new waste management system

98

Change	Results
Additional process piping	Because the waste stream has been segregated into streams and batch dumps containing separate contaminants each individual stream can be treated with the appropriate method
Installation of EMR Cell, Ion Exchange Column	The existing hydroxide precipitation equipment can effectively lower effluent contaminant levels after pretreatment with the new equipment Furthermore, the amount of sludge produced for removal is reduced after metal recovery
Installation of cycle timer and valves	Wastewater is fed into system at an effective rate to allow efficient pretreatment The volume of wastewater is also reduced lowering water costs and reducing sludge production

By installing and operating an ion exchange system in combination with electrolytic metal recovery, *Midwest Finishing* has reduced the copper and nickel load in its hydroxide precipitation system by 90+% Costs associated with disposal sludge from hydroxide precipitation however keeps the annual costs for operating high because of the volume of water still being treated The goal is to operate the recovery system as the primary pretreatment system with hydroxide precipitation reserved for use as a backup for batch dumps and upsets While the system is not yet completely functional, *Midwest Finishing* is confident that they will continue to meet pretreatment regulations

5 6 CASE STUDY 5 METAL RECOVERY -- DRAGOUT REDUCTION

Summary

Company	Douglas Corporation St Louis Park Minnesota
Product or Service	Manufacturer/finisher of zinc die castings and ABS plastic parts to exterior automotive specification

Hazardous Waste	Effluent with chrome copper cyanide and nickel contaminants (from plating lines)
Original System	Cold water counter current and deionized rinses which went directly to sewer system without pretreatment
New System	Ion exchange system to reduce regulated metals in the wastewater effluent
Installed Cost	Approximately $550 000
Results	**Keeps effluent within regulations and avoids sludge disposal costs**

5 6 1 Introduction

Douglas Corp is a manufacturer/finisher of zinc die castings and ABS plastic parts to exterior automotive specifications It employs about 75 people in its St Louis Park, Minnesota, facility

As part of its manufacturing process *Douglass* operates three automated rack plating lines to do copper/nickel/chrome plating (See Exhibit 5-8) This plating operation is 75% captive As a result of the plating line rinses the operation discharged an effluent with the following contaminants

Chrome	45-50 mg/L
Copper	15 mg/L
Cyanide	2 mg/L
Nickel	20 mg/L

The volume of the process effluent was approximately 175 gpm

In response to wastewater pretreatment regulations and a perceived excessive use of water and plating chemicals *Douglas* began a complete revamping of its plating operation in 1984

5 6 2 Basis for Design

Douglas Corp Chose an ion exchange system to capture metals in the waste stream because of increased hazardous waste disposal costs and the benefits of recovery rather than disposal of metal values

The company wanted to reduce the concentration of metal contaminants not just to the point of compliance but to the lowest concentration possible

Exhibit 5-8
Original Operation (Rinses)

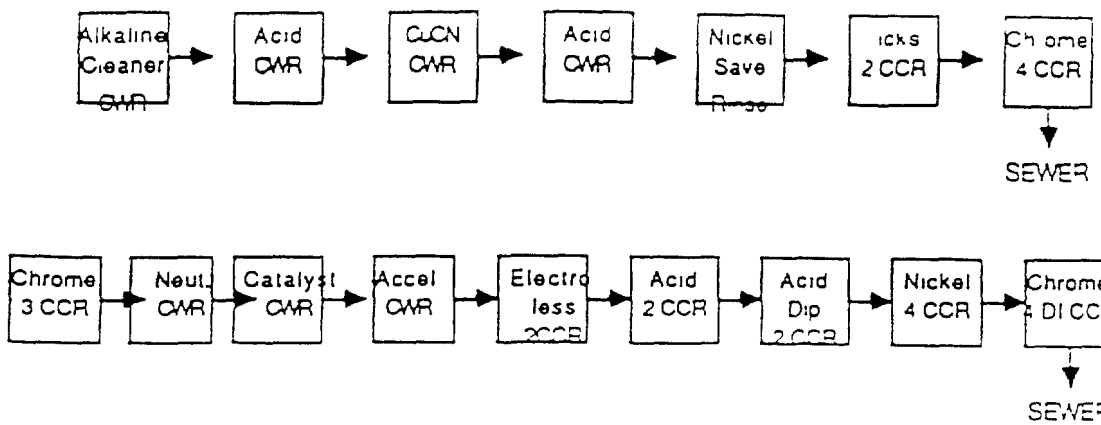

CWR = Cold Water Rinse
CCR= Countercurrent Rinse
DI R= Deionized Rinse

The steps to implementing the new waste management system were planned as listed below

1 Identify waste streams for treatment with ion exchange The waste streams to be treated are as follows

- Cyanide Copper (rinses and batch dumps)
- Bright acid copper (rinses)
- Nickel (rinses)
- Electroless nickel (rinses)

101

- Chrome (rinses)
- Chromic acid etch (rinses)

2 Choose and purchase ion exchange system

3 Reduce volume of rinsewater used

4 Control spills and drips which can affect effluent quality

There were some physical limitations affecting the implementation of ion exchange The major limitations were that no rinse tanks could be added to the existing plating lines and that resin canisters needed to be sized to fit near the tanks being treated

5 6 3 Methods and Materials

The equipment chosen by *Douglas Corp* is an ion exchange system made by Dornier of West Germany It uses stacked canisters of ion-exchange resins to capture metals in the waste stream and hold them for regeneration Each line employs a save rinse followed by a series of countercurrent rinse tanks The first rinse (i e the most concentrated rinse) in each countercurrent rinse line is circulated through the canisters The canister stacks are located immediately adjacent to this rinse

The factors governing the choice of ion exchange equipment manufactured by Dornier over others available were relatively minor and specific to *Douglas* operation It is felt that the reduction in metals and cyanide content of the effluent and the reliability of operation are representative of this type of equipment

Installation of the Dornier ion exchange system required some changes to the plating operation In addition to the previously mentioned reduction of rinsewater volume and control of drips and spills the following changes were necessary for optimum performance

- Changing some tap water rinses to deionized water rinses to allow return of concentrated rinse solution to the process tank
- Control of dragout from process solutions to reduce the load on ion exchange resins
- Filtration of concentrated rinse streams before circulation through ion exchange resins
- Installation of atmospheric evaporators to allow static rinses to be returned to the rinse tank

107

- Building an electrolytic recovery unit to reclaim metals from save rinses and solutions from regenerating ion exchange columns
- Installation of a chemical precipitation system to make metal hydroxide from which the metal is later recovered

In addition to these plating operation changes 1½ operators full time are required to manage and control the system This time covers the following operations

- changing out loaded resin canisters
- operation of regeneration equipment
- maintenance of pumps, filters, and monitoring equipment
- operation of electrolytic recovery equipment
- operation of chemical precipitation equipment

Once installed, the new system captures metal ions before they reach the waste stream as follows (See Exhibit 5-9)

Exhibit 5-9
New Operation (Rinses and Treatment)

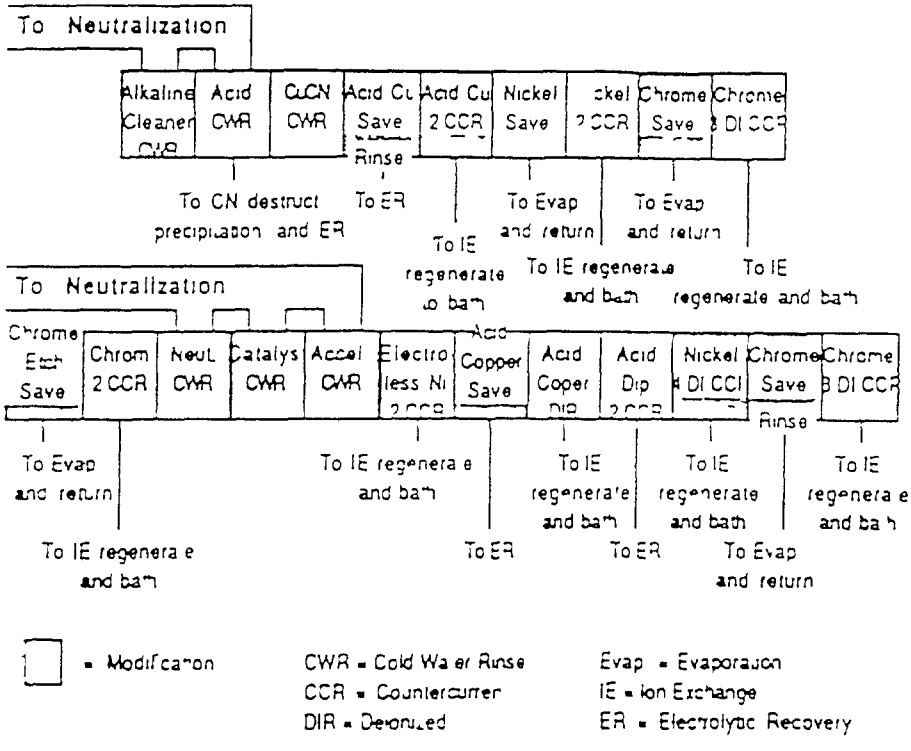

1 Save rinses are used after each of the following processes tanks and metal from the solutions recovered as indicated

- Bright acid copper --
  Save replaced every other week copper recovered electrolytically

- Bright nickel --
  Save reduced by evaporation and returned to the process tank

- Chrome --
  Chromic acid etch --
  Save reduced by evaporation and returned to the process tank

2 Each concentrated rinse is circulated through the resin, cleansing it of contaminants

3 Metal released upon regeneration of the resin in the canisters is recovered as follows

- Copper --
  Precipitated as copper hydroxide, mixed with sulfuric acid and recovered at the same time as the copper save solution

- Nickel --
  Mixed with sulfuric acid and returned to the process solution

- Chrome --
  Reduced by evaporation and returned to the process solution

5 6 4 Economics

Listed below is the approximate cost of the new equipment

Equipment	$300 000
Peripheral equipment (pumps filters gauges)	75 000
Shipping	2 000
Installation	100 000
Controls	75 000
Total	**$550 000**

104

The following list approximates the operating cost for one year for the new system

Utilities	$2 000
Supplies	600
Amortization (10 years at 10%)	25 000
Labor	13 000
Total	**$40 600**

(Maintenance fees taxes insurance and overhead have not been included in the total)

5 6 5 Results and Discussion

Change	Results
Reduction of rinsewater volume, control of leaks and spills, dragout control, filtration installation of evaporators, change to deionized rinses in some cases	These changes were made in preparation for use of ion exchange technology
Installation of ion exchange column	Ion exchange technology enables *Douglas Corp* to recover rather than dispose of metals
Construction of an electrolytic recovery unit	This equipment lets *Douglas* reclaim the metals from regenerating ion exchange columns rather than sending it off-site to be reclaimed
Installation of a chemical precipitation system	This system makes metal hydroxide from which the metal is later recovered

By installing and operating an ion exchange system *Douglas Corp* has made processing changes rather than using chemical precipitation for wastestream pretreatment This change has avoided producing 408 barrels of sludge per year It has also avoided the necessity of purchasing process chemicals valued at over $150,000 per year *Douglas Corp* is satisfied with the operation of the equipment and feels that as the costs of sludge disposal increase, the investment will be increasingly well-justified

APPENDIX 1

US EPA Guide to Cleaner Technologies - Organic Coating Removal
February 1994, Sections 2 through 4

CONTENTS

Section 2 Available Technologies 6
- How To Use the Summary Tables 6
- Plastic Media Blasting 12
- Wheat Starch Blasting 16
- Burnoff Coating Removal 18
- Molten Salt Coating Removal 20
- Sodium Bicarbonate Wet Blasting 22
- Carbon Dioxide Pellet Cryogenic Blasting 25
- High Pressure Water Blasting 30
- Medium Pressure Water Blasting 31
- Liquid Nitrogen Cryogenic Blasting 32

Section 3 Emerging Technologies 36
- How To Use the Summary Tables 36
- Laser Heating 38
- Flashlamp Heating 39
- Ice Crystal Blasting 39

Section 4 Pollution Prevention Strategy 41

SECTION 2
AVAILABLE TECHNOLOGIES

How To Use the Summary Tables

Nine available cleaner coating removal technologies are evaluated in this section namely

- Plastic media blasting
- Wheat starch blasting
- Burnoff coating removal
- Molten salt coating removal
- Sodium bicarbonate wet blasting
- Carbon dioxide pellet cryogenic blasting
- High pressure water blasting
- Medium-pressure water blasting
- Liquid nitrogen cryogenic blasting

Tables 1 and 2 summarize descriptive and operational aspects of these technologies Readers are invited to refer to the summary tables throughout this discussion to compare and contrast technologies

Descriptive Aspects

Table 1 shows the main **Coating Removal Mechanism(s)** of each available technology It next lists the **Pollution Prevention Benefits Reported Application, Benefits** and **Limitations** of each available cleaner technology

Operational Aspects

Table 2 shows the key operating characteristics for the available technologies These tables give users a compact indication of the range of technologies covered to allow preliminary identification of technologies that may be applicable to specific situations Tables 1 and 2 contain evaluations or annotations describing each available cleaner technology

In Table 2 **Process Complexity** is qualitatively ranked as high medium or low based on such factors as the number of process steps involved and the number of material transfers needed **Process Complexity** is an indication of how easily the new technology can be integrated into existing plant operations A large number of process steps or input chemicals or multiple operations with complex sequencing are examples of characteristics that would lead to a high complexity rating

The summary tables will help identify possible candidate cleaner technologies

The **Required Skill Level** of equipment operators also is ranked as "high "medium or "low **Required Skill Level** is an indication of the level of sophistication and training required by staff to operate the new technology A technology that requires the operator to adjust critical parameters would be rated as having a high skill requirement In some cases the operator may be insulated from the process by complex control equipment In such cases the operator skill level is low but the maintenance skill level is high

Use the information in the text from the references and from industry and trade groups to get more detail on the best candidates

Table 2 also lists the **Waste Products** and **Emissions** from the available cleaner technologies to indicate tradeoffs in potential pollutants the waste reduction potential of each and compatibility with existing waste recycling or treatment operations at the plant The **Capital Cost** and **Energy Use** columns provide a preliminary measure of process economics The **Capital Cost** is a qualitative estimate of the initial cost impact of the engineering procurement and installation of the process and support equipment compared to current coating removal equipment

Due to the diversity of cost data and the wide variation in plant needs and conditions it is not possible to give specific cost comparisons Cost analysis must be plant specific to adequately address factors such as the type and age of existing equipment space availability throughput product type customer specifications and cost of capital Where possible sources of cost data

108

Table 1 Available Cleaner Technologies for Coating Removal Descriptive Aspects

Technology/ Coating Removal Mechanism	Pollution Prevention Benefits	Reported Application	Benefits	Limitations
Plastic Media Blasting Impact/ Abrasive	Eliminates VOCs and HAPs Uses nontoxic media Uses a dry process Spent media are cleaned and reused several times for paint stripping Some spent thermoplastic media are recyclable to make plastic products	Removes paint from a variety of metal and non metal substrates Strips aircraft components and ground support equipment Cleans/strips commercial and industrial parts Removes powder coatings from sensitive substrates	Provides high throughput controlled coating removal Can selectively remove individual coating layers Eliminates water use When stripping is done with thermoplastic media the waste may be recyclable	Spent plastic media contain paint chips and so may be hazardous waste Requires workers to wear respiratory and eye protection equipment Blasting generates high noise levels May cause metal substrate damage More aggressive media types damage fiberglass or composite materials Contaminants in media cause stress risers in the substrate Uses flammable media
Wheat Starch Blasting Impact/ Abrasive	Eliminates VOCs and HAPs Spent media are cleaned and reused several times for paint stripping Uses a nontoxic biodegradable medium Uses a dry process	Gentle stripping action suitable for abrasion sensitive fillers and composite materials Gaining acceptance for thin soft aluminum in commercial aircraft skins	Provides controlled coating removal Can selectively remove individual coating layers Eliminates water use Uses inexpensive media Media are nontoxic and biodegradable	Spent starch media contain paint chips and so may be hazardous waste Dense contaminants in recycled media may damage substrate Stripping rate is generally slow to moderate Requires workers to wear respiratory and eye protection equipment Blasting generates high noise levels Media are moisture sensitive
Burnoff Coating Removal Thermal	Eliminates VOCs and HAPs	Removes thick coatings from a variety of coating line fixtures and tools	Provides rapid removal of thick coatings Can process complex shapes Burnoff ovens can remove uncured coating	Generates coating ash residue that may be hazardous waste Will damage heat sensitive materials such as heat treated aluminum or magnets Coatings containing halogens (PVC or PTFE) and/or nitrogen will produce corrosive offgas Must not be used for low melting metals or alloys Must not be used with pyrophoric metals May require offgas treatment depending on local air permitting regulations Potential for generation of products of incomplete combustion Presents possibility of fire
Molten Salt Coating Removal Thermal	Eliminates VOCs and HAPs	Removes thick coatings from a variety of coating line fixtures and tools	Provides rapid removal of thick coatings Can process complex shapes Salt bath ensures even heating Rinsewater waste is compatible with conventional water treatment systems	Generates by product sludge that may be hazardous waste Will damage heat sensitive materials such as heat treated aluminum or magnets Must not be used for low melting alloys Must not be used with pyrophoric metals May require offgas treatment depending on local air permitting regulations Potential for generation of products of incomplete combustion

(continued)

Table 1 (Continued)

Technology/ Coating Removal Mechanism	Pollution Prevention Benefits	Reported Application	Benefits	Limitations
Sodium Bicarbonate Wet Blasting Abrasive/ Impact	Eliminates VOCs and HAPs Uses nontoxic media	Removes paints from a variety of metal substrates Depaints wood without damaging the substrate Cleans and depaints brick walls Removes heavy accumulations of grease and dirt from mechanical equipment	Provides a controllable process for coating removal Can selectively remove individual coating layers Uses inexpensive stripping media In some cases liquid waste may be discharged to a conventional wastewater treatment plant Use of water dissipates heat generated by the abrasion Eliminates need to prewash surface Sodium bicarbonate waste streams are generally compatible with existing water treatment systems	Uses nonrecyclable stripping media Generates wet sodium bicarbonate sludge containing coating debris which may be a hazardous waste System must be available to collect and treat waste water containing sodium bicarbonate and paint chips May require exhaust ventilation system to control particulate Requires workers to wear respiratory and eye protection equipment Blasting generates high noise levels Media can be aggressive so potential for substrate damage exists
Carbon Dioxide Pellet Cryogenic Blasting Cryogenic/ Abrasive/ Impact	Eliminates VOCs and HAPs Uses a dry process so no wastewater is generated Coating chips collected dry with no media Uses natural or industrial sources so no net production of carbon dioxide occurs	Strips surfaces needing high degree of final cleanliness Useful for equipment where it is desirable to avoid disassembly Useful when volume of residue must be minimized such as with radioactive contaminated components or coatings containing hazardous metals (e g cadmium or lead)	Generates low volume of dry waste (none from the media) Eliminates water use Provides well defined coating removal pattern Can selectively remove individual coating layers Requires limited pre or poststripping cleanup No masking needed except for delicate materials such as soft clear plastics Equipment can be stripped without disassembly No media separation/ recycling system needed No media disposal cost Pellets driven into interstitial spaces vaporize leaving no residue	Generates small volume of coating debris which may be a hazardous waste Requires ventilation to avoid potentially dangerous CO_2 concentrations Generates airborne particulates that may contain metal from the coatings Requires workers to wear respiratory and eye protection equipment Requires workers to wear hearing protection Possible worker exposure to extreme cold Potential for worker injury from high velocity CO_2 pellet impact Rebounding pellets may carry coating debris and contaminate the work area or workers Nonautomated system fatigues workers quickly Possible static electricity buildup on substrate if no grounding provided Some coating debris may redeposit on substrate Low temperatures can cause condensation on substrate Large local temperature drops can occur in substrate but confined mainly to the surface layer May damage thermoset composite materials Difficult to control coating removal on graphite epoxy composites Slow coating removal rate Equipment bulky and capital intensive

(continued)

Table 1 (Continued)

Technology/ Coating Removal Mechanism	Pollution Prevention Benefits	Reported Application	Benefits	Limitations
High Pressure Water Blasting Impact	Eliminates HAPs and VOCs Water can be processed and recycled during stripping reducing wastewater volume	Robotic systems for rapid coating removal	High stripping rate Stripping water can be recycled Wastewater stream is compatible with existing water treatment systems	Coating debris sludge may be hazardous waste System is needed to collect and recycle stripping water Ultrahigh pressure systems (>15 000 psi) require expensive robotic operation Misapplied water jet will damage substrate Blasting generates high noise levels Water can enter cavities Water can penetrate and/or damage joints seals and bonded areas
Medium Pressure Water Blasting Impact/may be supplemented with softening agents or abrasives	Eliminates HAPs some systems use VOCs containing softeners Water can be processed and recycled during stripping reducing wastewater volume	Rapid coating removal	High stripping rate Stripping water can be recycled Wastewater stream is compatible with existing water treatment systems	Coating debris sludge may be hazardous waste System is needed to collect and recycle stripping water Requires workers to wear respiratory and eye protection equipment Blasting generates high noise levels Mechanized applications typical due to high reaction forces Misapplied water jet will damage substrate Water can enter cavities Water can penetrate and/or damage joints seals and bonded areas
Liquid Nitrogen Cryogenic Blasting Impact	Eliminates HAPs and VOCs Uses a dry process No dust fumes or chemicals released Coating chips collected dry with small volume of media	Removes thick coat ings of coating from a variety of coating line fixtures and tools	Environmentally clean No ash residue Low waste volume Eliminates water rinse Very fast cycle times (5 to 15 min) give high throughput rate Works well on thick coating buildups	Generates some solid waste containing coating chips and spent plastic media which may be a hazardous waste May require ventilation system to prevent nitrogen buildup in confined spaces Requires worker protection from low temperatures during unloading Not effective on thin coating films Less effective on epoxies and urethanes Existing technology limits part size to less than 6 ft tall and 38 in diameter weight less than 400 lb per stripping cycle

Table 2 Available Cleaner Technologies for Coating Removal Operational Aspects

Available Technology Type	Process Complexity/ Required Skill Level	Waste Products and Emissions	Capital Cost	Energy Use	Operations Needed After Stripping	References
Plastic Media Blasting	Medium/ Medium	Solid coating residue and spent media waste Airborne particulates Noise	Medium	Compressed air to propel blasting media Energy for media recovery and recycle dust collection and ventilation	Continuous separation of media from stripped coating particles and spent media during stripping Remove masking Dispose of spent media and contained coating residue waste Some spent thermoplastic media (even with coating residue) can be reused to make plastic parts	Abbott 1992 Bailey 1992 Baker 1991 Bowers Irons et al 1991 Capron and Wells 1990 Composition Materials Co 1993 Cundiff et al 1989 Dicaire 1990 Galliher 1989 Groshart 1988 *HazTECH News* 1991 Lyons 1990 Novak, 1990 Pauli 1989 Roberts 1989 U S DoD 1988 U S Navy 1987 U S Technology Corporation 1993 Wasson and Pauli 1993
Wheat Starch Blasting	Medium/ Medium	Solid coating residue and spent media waste Airborne particulates Noise	Medium	Compressed air to propel blasting media Energy for media recovery and recycle dust collection and ventilation	Continuous collection and reuse of spent media during stripping Remove masking Dispose of spent media and contained coating residue waste Spent media can be treated by biodegradation	Drake 1993 Larson 1990 Lenz 1991 Oestreich and Porter 1992 Oestreich and Waugh 1993
Burnoff Coating Removal	Low/ Low for operation High for maintenance	Ash Offgas	Medium	Electricity or gas supply for heating	Cool down Ash removal and collection	Coberth and Ceyssons 1993 Izzo 1989 Mann 1991 *Metal Finishing* 1990 Whelan 1993
Molten Salt Coating Removal	Low/ Low for operation High for maintenance	Salt/coating by product sludge Offgas Rinse water	Medium	Electricity or gas supply for heating	Cool down Water rinse	Gat et al 1993 Malloy 1993 *Metal Finishing* 1990
Sodium Bicarbonate Wet Blasting	Medium/ Medium	Liquid waste containing coating residue and spent media Some airborne particulates Noise	Low	Compressed air and water supply to propel blasting media Ventilation to control particulate	Remove masking Dispose of sodium bicarbonate solution and coating residue waste	Chen and Olfenbuttel 1993 Kline 1991 Larson 1990 Peebles et al 1990 Spears 1989 Svejkovsky 1991 Wasson and Haas 1990

(continued)

Table 2 (Continued)

Available Technology Type	Process Complexity/ Required Skill Level	Waste Products and Emissions	Capital Cost	Energy Use	Operations Needed After Stripping	References
Carbon Dioxide Pellet Cryogenic Blasting	Medium/ Medium	Solid coating residue waste Airborne particulates CO_2 gas Noise	Medium	Liquid carbon dioxide supply Compressed air supply to propel blasting me dia	Remove masking Dispose of coating residue waste	APCI 1984b Boyce et al 1990 Burcham 1993 Cheney and Kopf 1990 Cold Jet Inc 1989 Cundiff and Matalis 1990 Foster et al 1992 Ivey 1990 Kopf and Cheney 1989 Larson 1990 Schmitz 1990 Svejkovsky 1991 Wolff 1984
High Pressure Water Blasting	High/ Low for operation High for maintenance	Sludge waste con taining paint residue Wastewater Some airborne particulates Noise	High	Electricity to drive water pump	Remove masking Dispose of coating residue sludge and wastewater	Hofacker et al 1993 Howlett and Dupuy 1993 Stone 1993 U S Army 1992
Medium Pressure Water Blasting	Low/ High	Sludge waste con taining paint residue (and in some sys tems solvent or abrasive additives) Wastewater Some airborne particulates Noise	Low	Electricity to drive water pump	Remove masking Dispose of coating residue sludge and wastewater If used dispose of abrasive or sorbent or other treatment medium carrying solvent	Bailey 1992 Boeing 1993 Howlett and Dupuy 1993 *New Scientist* 1990 Petkas 1993
Liquid Nitrogen Cryogenic Blasting	Medium/ Low for operation High for maintenance	Solid coating residue and spent media waste Inert nitrogen gas	Medium	Liquid nitrogen supply	Vent nitrogen gas from the strip ping cabinet Allow parts to warm for 5 minutes Dispose of coating residue waste	APCI 1982 1984a 1984b 1985 Mathur undated *Products Finishing* 1983 Stroup 1991 Wolff 1984

are referenced in the discussions of each cleaner technology

Some additional inspection hand cleaning or other operations may be needed to prepare the surface after use of the cleaner technology for coating removal These are noted to indicate special considerations in the application of the cleaner coating removal technol ogy

Process Complexity, Required Skill Level Waste Products and **Emissions** and **Capital Cost** serve to qualitatively rank the cleaner technologies relative to each other The rankings are estimated based on the descriptions and data in the literature The text further describes the operating information applications benefits known and potential limitations technology transfer and the current state of development for each technology Technologies in earlier stages of develop ment are summarized to the extent possible in Section 3 Emerging Technologies

The last column in Table 2 cites **References** to publica tions that will provide further information about each available technology These references are given in full at the end of the respective technology sections

Plastic Media Blasting

Pollution Prevention Benefits

The plastic media blasting (PMB) coating removal process eliminates the use of solvent strippers The process uses nontoxic plastic media for coating re moval and does not generate volatile organic air emissions PMB is a completely dry stripping process thus eliminating generation of wastewater

In most applications the plastic media are collected cleaned to remove coating debris and reused The plastic particles do breakdown in use so they can not be reused indefinitely Once the particle size is smaller than about 60 to 80 mesh the stripping efficiency drops These small plastic fragments mixed with coating debris must be discarded

Plastic media are nontoxic but may require disposal

The disposal of the spent media could be a problem Although the plastic media are not toxic the spent stripping medium will be contaminated with coating chips These coating residues may contain hazardous metals or unreacted resins The disposal options available depend on the nature of the media used and the coating stripped If the spent media do require disposal at a hazardous waste site the cost will be high

A thermoplastic material has been developed to allow recycling of spent blasting medium (Lyons 1990) If thermoplastic media are used it is often possible to recover the spent media for manufacture of plastic parts even with the coating chip contamination Bioreactors are also under development to treat the spent PMB waste (Baker 1991) It may be possible to degrade either the plastic media or the coating residue (Bowers Irons et al 1991) Generally however the spent PMB media are not recyclable or biodegradable so disposal is required

How Does It Work?

The PMB process uses low pressure air or centrifugal wheels to project plastic media at a surface The blast particles have sufficient impact energy coupled with hardness and geometry to chip away or erode the coating The sharp-faceted particles fracture on impact leaving new sharp edges to allow continued use for stripping After the coating has been removed the part can be prepared for recoating by air pressure and/or vacuuming to remove plastic dust and coating debris

The hardness of the plastic particles varies from 34 to 72 on the Barcol scale (3 0 to 4 0 on the Mohs scale) In general the plastic media are selected to be harder than the coating Otherwise a larger particle size must be used to reach the necessary impact energy level

In typical applications the air pressure measured in the pot ranges from 10 to 60 psi The higher pressures remove coating faster but also are more likely to induce substrate damage

Operating Features

There are two basic types of PMB systems (1) cabinet systems and (2) open blast systems Automated and manual cabinet systems are available for stripping smaller parts Standard cabinet dimensions typically are limited to about 8 feet The cabinet systems provide an controlled environment for media collection and reuse Automated cabinets use either air pressure or rotating wheels to project the media toward the parts The parts may be in rotating baskets or can be moved through the cabinet on tracks or conveyor belts if high throughput with low labor use is needed Manual systems involve an operator manipulating an air powered blast nozzle The open blast systems are applicable for parts too large to fit into the cabinets for example automobiles white goods and aircraft In the open systems the operator uses a nozzle to project the air driven blast media at the surface

114

A wide range of PMB equipment is available and blasting conditions can be selected to suit the coating and substrate

PMB stripping equipment may range from simple single nozzle systems to complex multinozzle computer-controlled systems (Capron and Wells 1990) The electronic control systems provide not only for remote control of the operating parameters such as blasting pressure and media flow rate but also for fully automated motion and process control such as robotic operations (Dicaire 1990)

The parameters that affect the performance of the PMB process include

Blasting pressure—10 to 60 psi with an optimum range of 20 to 40 psi
Angle of impingement—30° to 80°
Media flow rate—250 to 500 lb/hr with a 1/2 in nozzle
Blasting standoff distance—6 to 30 in
Stripping rate—0 5 to 5 ft^2/min
Type of coating to be removed
Nature of substrate material and its thickness
Media type and size
Nozzle size
Masking requirements
Types and capabilities of commercially available PMB systems (Abbott 1992 Lyons 1990)

During normal operations a PMB operator will have a set of predetermined parameters to be applied to a given substrate In the case of a complex workpiece containing parts made of several types of materials or with filled areas the operators will adopt a blast plan with each substrate marked as to type prior to blasting

Problems may arise when higher air pressures are used for blasting including metal removal reduced resistance to metal fatigue the hiding and causing of surface cracks and buckling These problems have caused some controversies in the aerospace industry where materials such as aluminum and high strength composites are required to carry dynamic or fatiguing loads

The U S Bureau of Mines conducted a study of the explosibility and ignitability of plastic abrasive media for the Naval Civil Engineering Laboratory (NCEL) (U S Navy 1987) The study concluded that recycled media in the size range of 12 to 80 mesh would not explode but that particulate from degraded media had explosive potential (for example less than 40 mesh with Type V media) The possibility for explosive condition is greatest in portions of the media recycling system where the concentration of fines is highest for example a baghouse filtration system The report suggests locating such equipment away from occupied areas outside if possible and providing overpressure relief vents

Plastic blast media can be selected to adjust the stripping rate and aggressiveness

Six thermoset and thermoplastic blast media have been promulgated and/or approved for use by the U S Department of Defense (Lyons 1990 U S DoD 1988) Specifications for a biodegradable nonpetroleum polymer also were introduced later (Lyons 1990) The blast media are classified by type and hardness (Barcol and/or Mohs scale) as follows

Type I—polyester (thermoset) 34 42 Barcol 3 0 Mohs
Type II—urea formaldehyde (thermoset) 54 62 Barcol 3 5 Mohs
Type III—melamine formaldehyde (thermoset) 64 72 Barcol 4 0 Mohs
Type IV—phenol formaldehyde (thermoset) 3 5 Mohs
Type V—acrylic (thermoplastic) 46 54 Barcol 3 5 Mohs
Type VI—polycarbonate (allyl diglycol carbonate) (thermoset) 20 30 Barcol 3 0 Mohs
Type VII—a nonpetroleum amylaceous polymer (biodegradable) 2 8 Mohs

Larger harder media give more aggressive stripping

The order of media aggressiveness from mild to aggressive is Type I Type VI Type V Type II and Type III Type I is soft abrasive that would be selected for topcoat or primer removal from soft metals or fiber glass Type VI is intended for low air pressure application to removing coating from fiberglass or other composites Higher air pressure increases the break down rate of Type VI media so the application pressure is limited to about 20 psi Type V is a durable medium for general stripping of coatings from metal sheeting Type II like Type V is applied for general stripping Type II gives faster stripping rates but is less more likely to damage the substrate if the operator deviates from stripping parameters Type IV is similar to Type II in aggressiveness but breaks down faster and has not found much market acceptance Type III is an aggressive fast acting medium for removal of topcoats and primers from hard substrates such as engine parts (Groshart 1988 Bailey 1992 Composition Materials Co 1993) U S Technology Corporation 1993)

115

Size is the second major factor controlling the aggressiveness of PMB media Larger particles generate more aggressive stripping action The various types of media typically are available in about five mesh size ranges The largest standard size available is 12 to 16 mesh and the smallest is 40 to 60 mesh The material type and particle size can be selected to optimize the PMB system to the cutting speed and gentleness required for particular application

Plastic media can be cleaned and reused

Systems to recover and reuse the plastic media have been developed Media recovery is facilitated if the parts are small enough to allow the use of a blasting cabinet Media reuse systems separate contaminants such as coating chips and undersized media fragments from the intact media Separation can be done by cyclone separators vibrating screens magnetic separators or similar equipment The media reclamation systems typically employ a combination of these equipment types to separate contaminants and clean the spent media for reuse (Wasson and Pauli 1993) The number of reuse cycles that can be achieved is variable Generally large media and lower operating pressures allow more reuse cycles Granulated plastic pellets used at pressures below 50 psi are reported to be durable with an average breakdown rate of less than 10%

Each application requires specific custom designs based on individual production requirements a generic "Statement of Work is no longer acceptable (Roberts 1989)

The energy requirement is determined by the complexity of each PMB system Compressed air is required to operate the blasting system at different blasting pressures and nozzle sizes For example the air use is 8 SCFM for a 1/8 inch nozzle at 30 psi and 230 SCFM for a 1 2 inch nozzle at 60 psi (Dotson and Ballard 1992) Energy is required to operate a spent media recovery subsystem that includes a pneumatic transport vacuum hose an induced draft fan a rotary screw conveyor and a subfloor piping or mechanical conveying system Energy is also consumed by the media recycling subsystem that includes a cyclone an airwash a vibrating screen a rotary airlock and pneumatic or mechanical conveyance devices Other subsystems such as a dense particle separator dust collector and ventilation system also consume energy

As seen in Table 2 PMB operation requires a medium skill level Effective use of PMB requires an initial training period to familiarize the operator with the required stripping media supply pressure and the nozzle to surface distance and angle With appropriate training operators should be able to perform the job without much difficulty

Application

The PMB process has been widely used by the military and commercial sectors

Types of coatings removed include powder coatings urethanes military chemical agent resistant coatings epoxies high solids polyamid acrylic lacquers polysulfide sealants fluorocarbon films
Cleaning/stripping of machinery equipment engines injection molds etc
Cleaning/stripping of aluminum stainless and mild steel fiberglass and plastic totes and tanks and containers
Cleaning/stripping of commercial/industrial parts components and structures fabricated of metal, engineered plastics fiberglass and advanced composites
Stripping of marine vessels and related components and assemblies
Exterior airframe stripping
Stripping of aircraft ground equipment
Stripping aircraft components (e g wheels brakes landing gear engine parts and composite parts) (Lyons 1990 Novak 1990 Pauli 1989)

Current applications show that PMB can be economical

PMB stripping of a C 5 aircraft (32 000 ft²) was studied in detail at a large new Air Force installation designed for PMB stripping of B 52 and C 5 aircraft using Type V PMB media The study indicated that PMB offers significant economic advantages over solvent stripping The total working time for supervision masking blasting demasking, sanding vacuum and blow off and housecleaning was 3 010 hours This reported to be a savings of 2 000 hours over solvent stripping of the same aircraft The reported stripping rate waste generation rate and unit cost were 1 35 ft²/min 0 22 lb/ft and $4 70/ft² The costs include electrical labor media use hazardous waste disposal and consumables The PMB process is expected to save $4 800 000/year and eliminate 72 000 gallons/year of methylene chloride stripper (Wasson and Pauli 1993)

The major factors controlling costs of operating a PMB system are

Hourly cost of direct labor
Labor productivity rates typically 75%

116

Cost of blast media ranging from $1 50/lb to more than $2 00/lb (1991 prices)
Energy costs
Overhead costs
Waste disposal costs ranging from inconsequential to up to $4/blast hr if hazardous waste is generated (assuming a 1/2 in nozzle at 30 psi)
Removal rate typically ranging from 0 5 to more than 4 ft^2/min (assuming a 1/2 in nozzle at 30 psi)
Efficiency of the media reclamation system

Under typical operating conditions the variable operating costs are reported to range from $45 to $65/blast hr and the cost of removal can range from $0 20 to $2 15/$ft^2$ (Lyons 1990) The process can provide a high throughput rate but the capital investment and start up costs for new system with state-of the art media recycling equipment can be high In most cases the PMB systems are not compatible with existing stripping facilities so facility modifications are required

Benefits

Some of the major beneficial aspects of PMB include

High stripping rate
Eliminates water use
Can selectively remove individual coating layers (e g remove topcoat leaving primer)
Often done with recyclable thermoplastic media
Fully automated robotic systems available
Fully developed systems available
No size limitations on parts to be stripped

Limitations

Potential hazards and limitations of PMB include

Spent media contain coating chips and may be a hazardous waste
Operators should wear respiratory and eye protection equipment for protection from rebounding media and airborne particulates
Operators should wear hearing protection due to high noise levels from blasting equipment
PMB may cause metal substrate damage such as reducing resistance to metal fatigue hiding and causing of surface cracks and buckling
PMB may cause crack closure
More aggressive media types damage composite materials
Contaminants in media may damage substrate
PMB has potential for high disposal costs if spent media are hazardous and cannot be recycled
PMB uses flammable media
The technology has somewhat high capital and startup costs
PMB requires complex subsystems for media recovery and recycling and dust collection and control
There is a possible explosive hazard from dust

References

Abbott K E 1992 Plastic Media Blasting — State of the Technology *Materials Performance 31*(2) 38 39

Bailey, J 1992 Strip It Off *Industrial Finishing 68*(2) 24 27

Baker S 1991 Bugs Help Strip Old Paint in Bio Reactor System *Skywriter* November 22 p 22

Bowers Irons G R Pryor and C Miller 1991 The Biostripping of Polyurethane Paint In *Proceedings of the 1991 DOD/Industry Advanced Coatings Removal Conference* San Diego California pp 40 48

Capron S and M Wells 1990 Performance Testing of Plastic Media Blasting Equipment In *Proceedings of the 1990 DOD/Industry Advanced Coatings Removal Conference* Atlanta Georgia

Composition Materials Company Inc 1993 *Plati Grit* Composition Materials Company Fairfield Connecticut

Cundiff C H O L Deel and R E O Sullivan 1989 Plastic Media Evaluation—A Comparative Study of Performance Capabilities of Several Plastic Media In *Proceedings of the 1989 DOD/Industry Advanced Coatings Removal Conference* Ft Walton Beach Florida

Dicaire P 1990 Dust Free Robotic PMB Paint Stripping for Transport Size Aircraft In *Proceedings of the 1990 DOD/Industry Advanced Coatings Removal Conference* Atlanta Georgia

Galliher R D 1989 Surface Preparation and Paint Adhesion on Aluminum Substrate after Blasting with Plastic Abrasive In *Proceedings of the 1989 DOD/Industry Advanced Coatings Removal Conference* Ft Walton Beach Florida

Groshart E 1988 The New World of Finishing *Metal Finishing* October pp 33 34

HazTECH News 1991 *HazTECH News 6*(8)

Lyons P J 1990 Plastic Media Comes of Age *Metal Finishing* July pp 43 46

Novak H L 1990 Development and Testing of a Fluorescent Plastic Grit Blast Media In *Proceedings of the 1990 DOD/Industry Advance Coatings Removal Conference* Atlanta Georgia

Pauli R 1989 Plastic Media Blast Dry Stripping Four Years Later In *Proceedings of the 1989 DOD/Industry Advanced Coatings Removal Conference* Ft Walton Beach Florida

Roberts B 1989 PMB Then Now and the Future In *Proceedings of the 1989 DOD/Industry Advanced Coatings Removal Conference* Ft Walton Beach Florida

U S Department of Defense (DoD) 1988 Plastic Media for Removal of Organic Coatings Military Specification Mil P 85891A 0386 DD May 6

U S Navy 1987 *Explosibility and Ignitability of Plastic Abrasive Media* CR 87 011 Naval Civil Engineering Laboratory Port Hueneme California

U S Technology Corporation 1993 *The Magic is the Media* U S Technology Corporation Canton Ohio

Wasson N E Jr and R Pauli 1993 'Dry Stripping the C 5 and B 52 in the World s Largest Dry Stripping Installation In *Proceedings of the 1993 DOD/Industry Advanced Coatings Removal Conference* Phoenix Arizona pp 530 540

Wheat Starch Blasting

Pollution Prevention Benefits

The wheat starch blasting coating removal process eliminates the use of solvent strippers The process uses nontoxic biodegradable media for coating removal and does not generate volatile organic air emissions The wheat starch blasting media are made from renewable agricultural products rather than from petroleum which helps reduce resource consumption Wheat starch blasting is a completely dry stripping process and thus eliminates the generation of wastewater

The starch media can be collected and reused for several blasting cycles The wheat starch particles do break down in use so they cannot be reused indefinitely Fine dustlike particles are not effectively propelled for stripping The starch media are processed in equipment similar to that used for processing PMB media Small starch fragments mixed with coating debris are separated and discarded

The disposal of the spent media could be a problem Although the media are not toxic the spent stripping media will be contaminated with coating chips These coating residues may contain hazardous metals or unreacted resins The disposal options available depend on the volume of the media used and the coating stripped The wheat starch blasting media are 100% carbohydrate so proper aerobic biodegradation can reduce the waste volume substantially The media are digested to produce a liquid that can be separated from coating debris prior to disposal Biodegradation is most likely to be economical when spent media volumes are on the order of 50 000 to 100 000 pounds (Oestreich and Waugh 1993)

How Does It Work?

Wheat starch blasting uses low pressure air to propel particles at the painted surface The coating is stripped away by a combination of impact and abrasion Although wheat starch blasting uses generally similar equipment and techniques to PMB the process has somewhat different operating characteristics and stripping action (Drake 1993)

Operating Features

In wheat starch coating removal particles of wheat starch are propelled at a surface by a flow of air to abrade and fracture the coating The natural wheat starch has the benefits of being nontoxic biodegradable and made from a renewable resource (Lenz 1991) The media are clear white granules in the size range of 12 to 30 mesh with a density of 1 45 g/cm^3 and a Shore D hardness of 85

Testing determined that when the propelling air pressure is above 30 psi (200 kPa) the starch particles fracture The fracturing occurs as the starch removes coating material resulting in smaller particles and more edges per pound of medium to be recycled as stripping proceeds The wheat starch thus becomes more effective as it is used until the particles become so small that suspended starch dust obscures the operator s view of the surface The used starch media are collected and processed Small starch particles and the removed coating are collected for disposal and the larger particles are reused for blasting Because the media are reused continuously for coating removal the potential arises for contamination of the media with harder coating particles The coating particles could impact the substrate and cause stress risers

118

Wheat starch blasting uses similar equipment and techniques to PMB but the media properties result in a gentle, reliable stripping action

Particle fracturing reduces the sensitivity of wheat starch coating removal to operating conditions An increase in air pressure increases particle flow rate but does not cause the stripping action to become more aggressive

As with the plastic media new or clean recycled wheat starch media do not present explosive hazards Dust generation from the wheat starch raises the potential for generating an explosive dust mixture Testing performed for a wheat starch media vendor indicates that undried dust must be smaller than 120 mesh for explosion to be a hazard As with PMB dust the explosive hazard from wheat starch blasting media dust is small and is limited to process areas where high concentrations of dust may accumulate Precautions for handling wheat starch blasting media dust should be similar to those mentioned for PMB dust handling

The reported typical blasting conditions for coating removal from composites are (Oestreich and Porter 1992)

Blasting pressure—20 to 25 psi
Angle of impingement—20° to 40°
Media flow rate—420 to 720 lb/hr with a 3/8-inch extended Venturi or double Venturi nozzle
Blasting standoff distance—6 to 8 in

The reported typical blasting conditions for coating removal from clad aluminum are (Oestreich and Porter 1992)

Blasting pressure 25 to 30 psi
Angle of impingement 40° to 70°
Media flow rate 900 to 1 200 lb/hr with a 1/2 inch extended Venturi or double Venturi nozzle
Blasting standoff distance 8 to 12 in
Stripping rate 0 9 ft^2/min

The wheat starch can absorb moisture causing clumping of the media during blasting In humid conditions it may be necessary to dry the blasting air to avoid moisture pickup by the media

Application

Wheat starch blasting is known mainly for its gentle stripping action Therefore most of the testing and application has been on sensitive substrates such as

Thin aluminum particularly soft alloys or anodized surfaces (e g commercial aircraft skins)

Sensitive composites (e g automobile fiberglass or plastic or aircraft radomes)

The wheat starch technology has been tested for stripping a variety of epoxy urethane zinc chromate primer and alkyd enamel coatings such as MIL P 23377 MIL C 83286 and TT E 489 (Larson 1990) Test substrates have included aluminum plated ferrous alloys and composites

Benefits

Some of the major beneficial aspects of wheat starch blasting include

Recent developments indicate that moderate stripping rates can be achieved while maintaining a gentle stripping action
Safe on soft clad aluminum and composites
Eliminates water use
Can selectively remove individual coating layers (e g remove topcoat leaving primer)
Uses inexpensive stripping media
Media are nontoxic and biodegradable
Fully developed systems available
No size limitations on parts to be stripped

Limitations

Potential hazards and limitations of wheat starch blasting include

Spent media contain coating chips and may be a hazardous waste
Generally slow to moderate stripping rate
Dense contaminants in recycled media may damage substrate
Operators should wear respiratory and eye protection equipment for protection from rebounding media and airborne particulate
Operators should wear hearing protection due to high noise levels from blasting equipment
Media are moisture sensitive and can require an air dryer in humid atmospheres
Potential for high disposal costs if spent media are hazardous and cannot be recycled or treated by biodegradation
Somewhat high capital and startup costs
Requires complex subsystems for media recovery and recycling and dust collection and control
Explosive hazard from dust

References

Drake C 1993 Envirostrip Starch Media Dry Stripping Process Update In *Proceedings of the 1993 DOD/ Industry Advanced Coatings Removal Conference* Phoenix Arizona pp 427 431

Larson N 1990 Low Toxicity Paint Stripping of Aluminum and Composite Substrates In *First Annual International Workshop on Solvent Substitution* DE AC07 76ID01570 U S Department of Energy and U S Air Force Phoenix Arizona pp 53 60

Lenz R P 1991 Performance Characteristics of Starch Blast Media In *Proceedings of the 1991 DOD/Industry Advanced Coatings Removal Conference* San Diego California pp 147 188

Oestreich J and T Porter 1992 Starch Media Blasting for Aerospace Finishing Applications In *28th Annual Aerospace/Airline Plating and Metal Finishing Forum and Exposition* San Diego California

Oestreich J and R D Waugh 1993 'Bioremediation of Starch Media Waste In *Proceedings of the 1993*

DOD/Industry Advanced Coatings Removal Conference Phoenix Arizona pp 432 443

Burnoff Coating Removal

Pollution Prevention Benefits

Burnoff coating removal technologies use a combination of volatilization pyrolysis and oxidation to remove organic coating materials Thermal methods completely avoid the use of solvents for coating removal but generate potentially contaminated offgas and wastewater streams In a well designed unit the organic materials will be almost completely converted to carbon dioxide and water However traces of more complex organic compounds may appear in the offgas In addition coatings containing halogens or nitrogen compounds will produce volatile corrosive compounds such as hydrogen chloride Inorganic pigments will not volatilize and thus remain as a residue on the part after the organic coating burns off Water may be needed to scrub the pyrolysis stripping unit offgas stream and in some systems is used to flush inorganic residue from the stripped part

How Does It Work?

Burnoff systems use temperatures of 370°C (700°F) or higher to volatilize and/or burn the organic coating material A few metals such as mercury or arsenic will volatilize at the operating temperature of burnoff ovens However toxic volatile metals are not used in current paint formulations Inorganic materials such as pigments remaining on the substrate must be removed by mechanical cleaning such as low energy shot blast manual cleaning or water rinse

Operational Features

Burnoff systems remove coating materials rapidly Even difficult coatings such as heavy layers of powder coating can be removed However the substrate is exposed to a harsh high temperature environment so pyrolysis coating removal is generally suitable only to noncritical items Burnoff coating removal is not generally acceptable for parts that will be used in a product However the functioning of part support equipment usually is not impaired by many cycles of heating so burnoff coating removal can be used for hooks racks and overspray collectors

Burnoff coating removal can be accomplished by a variety of methods including direct burnoff heating in an abrasive fluidized bed or pyrolysis In all cases a high-temperature energy source is used to remove organics followed by a cleaning process to remove inorganic residues Inorganic residue removal can be accomplished by mechanical or manual brushing or blast cleaning with water or airborne media (Izzo 1989) Offgas treatment including an afterburner scrubber and filter typically is supplied to control air pollution To ensure safety the system must be designed to control the intense heat resulting from the rapidly burning organic coating

Several burnoff technologies are available

For direct burnoff the coating is ignited to burn off the organic material at an operating temperature of 540°C to 650°C (1000°F to 1200°F) Direct burnoff is suitable to continuous operation in which a conveyor carries the racks through the burnoff oven and then through a cleaning system to remove inorganic residue As the parts pass through the burnoff unit ceramic nozzles direct high temperature flue gas onto the parts at high velocity to ignite the coating Complete combustion typically occurs within the unit to ensure acceptable coating removal and suitable air pollution control at the source With proper line speed and operating temperature complete combustion can be obtained but some units include an afterburner to further ensure that organic materials are fully converted to carbon dioxide and water Burnoff also can be done in batches in a closed oven

120

Coatings can be thermally degraded in an abrasive fluid bed

In an abrasive fluid bed the coating is thermally degraded by a combination of pyrolysis and partial oxidation at a temperature of 480°C to 510°C (900°F to 950°F) To maintain a fluidized state air flows up through a bed of abrasive media such as silica sand or aluminum oxide (Coberth and Ceyssons 1993) The hot abrasive media transfer heat to the coating to pyrolyze and remove organic constituents After the part is removed from the fluidized bed inorganic residues must still be removed Heat is supplied to the abrasive media by an electrical resistance heating unit The organic materials are not fully oxidized in the fluidized bed so an afterburner operating at 790°C to 870°C (1450°F to 1600°F) is required to oxidize the intermediate organic products

Coatings are volatilized in the pyrolysis process

In the pyrolysis process the coating is volatilized to produce fumes rich in organic compounds (Whelan 1993) The combustible materials on the substrate volatilize to form an organic rich vapor but do not burn in the pyrolysis unit The unit therefore operates with low or no oxygen and at a lower temperature (370°C to 500°C (700°F to 930°F)) with no flame present in the unit

Some coatings notably epoxies contain oxygen molecules bound in the coating The oxygen in the coating can support combustion which would cause excessive temperature rise Water vapor cloud injection controls the temperature in the pyrolysis unit to ensure no combustion takes place and to minimize damage to the substrate Typically pyrolysis units can only process cured coating materials The solvent and other volatiles in uncured coatings will evaporate rapidly in the pyrolysis unit The rapid input of reacting materials will cause temperatures in the unit to rise before the control system can respond The resulting uncontrolled temperature rise causes the pyrolysis unit to shut down to prevent excessive temperatures Advanced control systems are being developed and tested to allow pyrolysis to be applied to uncured coatings (Mann 1991)

Because of the need to control oxygen levels pyrolysis units typically are batch ovens The organic fumes from the pyrolysis unit are treated in an afterburner to convert hydrocarbons to carbon dioxide and water Following removal from the pyrolysis unit inorganic residues must be removed from the part

Burnoff gives rapid removal of thick coatings

Heat is the principle removal mechanism for coating removal Although all of the thermal systems require a follow up cleaning step to remove inorganic residues no solvents or alkalis are used to soften and remove the coating Despite the heating value of the organic material in the coating heat input is needed to initiate maintain and complete combustion Heat for direct burnoff or pyrolysis units usually is supplied by combustion of a fossil fuel typically gas in the coating removal unit The fluidized bed units normally use electrical heating The afterburner in all units typically uses gas or another fossil fuel to supply the required energy

The control systems for a burnoff coating removal system are complex Accurate temperature control is needed to ensure that complete removal of the coating and destruction of organics in the offgas is reliably achieved The control systems for the thermal units and afterburner may be unlike equipment normally found in coating shops so new maintenance skills are needed

Actual operation of a burnoff coating removal unit involves only mechanical or manual loading and unloading of parts The units are typically designed to operate automatically during the coating removal cycle so no operator attention is needed during a normal cycle The required skill level is therefore lower than the level for solvent stripping units that require the operator to handle potentially hazardous chemicals

Application

Burnoff coating removal is commonly used for high volume noncritical parts such as the hooks racks overspray collectors or other similar parts Burnoff methods can be used to remove both conventional and powder coatings (Mann 1991)

It also may be possible to use the burnoff coating technology to strip parts with poor coatings but some limitations apply Metals with a melting point below 900°F generally are not suitable for burnoff coating removal Magnesium will burn violently if ignited so magnesium and its alloys should not be stripped in a burnoff oven Iron steel and nontempered aluminum generally are amenable to burnoff stripping However testing must be performed to determine if heating deforms removes tempering or otherwise damages the part

121

Benefits

Some of the major beneficial aspects of burnoff coating removal include

- Allows rapid removal of heavy coating accumulation with a minimum of handling
- Can process parts with complex shapes
- Direct-burn ovens can remove wet uncured coatings
- Large ovens are available to process large items but the maximum size is limited by the oven size

Limitations

Potential hazards and limitations of burnoff coating removal include

- Generates coating ash residue that may be hazardous waste
- Will damage heat-sensitive materials such as heat treated aluminum or magnets
- Coatings containing halogens (polyvinyl chloride [PVC] or polytetrafluoroethylene [PTFE]) and/or nitrogen will produce corrosive offgas
- Must not be used for low-melting alloys such as zinc bearing materials
- Must not be used for magnesium or its alloys or for pyrophoric metals
- May require offgas treatment such as scrubbers and air filters depending on local air permitting requirements
- May generate products of incomplete combustion
- Presents possibility of fire

References

Coberth D and L Ceyssons 1993 Stripping Organic Finishes with Fluidized Beds *Metal Finishing Organic Finishing Guide Book and Directory Issue 91*(5A) 234 236

Izzo C 1989 PF Coatings Clinic *Products Finishing 53*(5) 14

Mann C 1991 Paint Waste Minimization by Means of Recyclable Overspray Collectors *Product Finishing* June pp 22 24

Metal Finishing 1990 Product Showcase Metal and Paint Strippers *Metal Finishing* July pp 36 40

Whelan K 1993 Burn Off Ovens for Stripping *Metal Finishing Organic Finishing Guide Book and Directory Issue 91*(5A) 225 227

Molten Salt Coating Removal

Pollution Prevention Benefits

The molten salt stripping process replaces solvent strippers The molten salt process produces a coating pigment salt by product residue wastewater and offgas streams

During molten salt stripping by products of the reaction of the salt and the coating accumulate in the bath Even when the bath is saturated with by products stripping will continue Additional by products develop as more coating is removed from a separate phase in the bath The by product sludge phase can be removed for disposal The organic content of the coating will be oxidized by reaction with the salt bath The by-product sludge is a small volume containing mostly metal salts formed by reaction of pigments with the salt bath materials Depending on the salts used in the bath and the metals in the pigments the sludge may have RCRA hazardous characteristics

The wastewater results from water used to cool and rinse the part after it leaves the molten salt bath The salt in the coating removal bath usually is formulated from alkaline materials so for most installations the rinsewater will have a pH of about 11 to 12 The rinsewater will require neutralization to a pH range of 6 to 9 prior to discharge For plants with a central wastewater treatment plant it may be possible to use the alkaline rinse water to help neutralize acidic waste water from other metal finishing operations The rinsewater also may contain metals from the coating pigments Analysis for potential metals should be performed prior to discharge and treatment for metal removal may be required depending on the plant discharge permits

The molten salt technology chemically oxidizes the coating organics

As with the burnoff coating removal systems molten salt coating removal works by combusting the coating organics The result for hydrocarbon coatings should be mainly the formation of CO_2 and H O However products of incomplete combustion and entrained salt particulates and pigments can enter the offgas stream A well designed molten salt stripping system will include provisions to control and treat the offgas

How Does It Work?

The molten salt stripping process relies on chemical oxidation of the coating by a specially formulated molten salt bath The process uses mixtures of inorganic salts formulated to react with the coating material Carbon and hydrogen in the coating are oxidized to

122

CO_2 and H_2O Most metals are retained in the molten salt bath In sodium carbonate based and similar molten salt formulations halogens combine with the molten salt to form halides and to release CO_2 from the carbonate salts Metals from the coating pigments generally are retained in the molten salt and enter the offgas stream only in small amounts

The main functions of the molten salt are a heat transfer medium and catalyst to oxidize the organics in the coating The salt bath provides thermal inertia and effective heat transfer to avoid hot spots or temperature excursions The molten salt also acts as an in place scrubber which retains the nonvolatile by products (Gat et al 1993)

Operational Features

Molten salt stripping uses simple and straightforward processing steps The items to be stripped are loaded into baskets or supported on hooks The items then are lowered into the salt bath at a controlled rate The required heating time in the bath depends on a number of variables including

Chemistry and temperature of the bath
Shape size and material of the item
Thickness and type of coating being stripped

The typical dwell time ranges from seconds for thin coatings to minutes for thick coatings (Malloy 1993) Following immersion the items are removed from the salt bath and rinsed with water for cooling and removal of residual salt The rinsed items are dried by an air knife or other compressed air blow drying operation The process allows rapid and complete coating re moval with a minimum of hand work

Molten salt stripping baths are formulated from inor ganic salts such as sodium carbonate The exact mixture of salts is tailored to the required operating temperature chemical reactivity and performance The operating temperature for the salt bath varies depend ing on the salt formulation Formulations are available with operating temperatures from 550°F to 900°F The lower temperature formulations usually are applied to salvage materials with blemished coatings or for maintenance stripping Higher temperature formula tions strip heavy coating accumulations from hooks racks and paint line fixtures

Application

Molten salt stripping typically is targeted to the same applications as burnoff technologies Although the molten salt process achieves coating oxidation by a different mechanism the process provides the same basic features that is rapid destruction of thick coat ings The items most often stripped with molten salt baths are paint line supports and fixtures Molten salt baths can remove a variety of organic coatings includ ing nylon polyester and epoxies Due to the chemistry of the bath molten salt systems also can be applied to strip coatings containing halides e g PVC and PTFE (Malloy 1993)

Benefits

Some of the major beneficial aspects of molten salt coating removal include

- Allows rapid removal of heavy coating accumula tion with a minimum of handling
  Can process parts with complex shapes
  Provides rapid well controlled uniform heating
  Wastewater stream is compatible with conven tional wastewater treatment plants available to many installations
  Salt baths are available to process moderate-sized items but the maximum size is limited by the bath size

Limitations

Potential hazards and limitations of molten salt coating removal include

Generates a by product salt sludge that may be a hazardous waste
Will damage heat-sensitive materials such as heat treated aluminum or magnets
Must not be used for low-melting alloys such as zinc bearing materials
Must not be used for magnesium its alloys or pyrophoric metals
May require offgas treatment such as scrubbers and air filters depending on local air permitting requirements
May generate products of incomplete combus tion
Wastewater and dissolved salt disposal require ments will depend on the toxicity of the coating and pigments being removed

References

Gat U S M Crosley and R L Gay 1993 Waste Treatment for Removed Protective Coatings In *Proceedings of the 1993 DOD/Industry Advanced Coatings Removal Conference* Phoenix Arizona

Malloy J C 1993 "Molten Salt Bath Stripping of Organic Coatings *Metal Finishing Organic Finish ing Guide Book and Directory Issue 91*(5A) 234-236

123

Metal Finishing 1990 Product Showcase Metal and Paint Strippers *Metal Finishing* July pp 36 40

Sodium Bicarbonate Wet Blasting

Pollution Prevention Benefits

The sodium bicarbonate technologv eliminates solvent use in coating removal The sodium bicarbonate stripping medium is not regulated under the OSHA hazard communication standard 19 CFR 1910 1200 or the SARA Title III reporting requirements The stripping medium is mixed with water which controls dust and substrate heating Water also is used to rinse the substrate after stripping is complete As a result an aqueous waste stream is generated Although the medium is nontoxic many coatings contain metals or unreacted resins that are toxic The spent media will contain coating residue so the aqueous waste must be tested to determine if it will meet local discharge limits for wastewater disposal Testing should include quanti fying pH total suspended solids (TSS) oil and grease and metal concentrations If desired the media can be dissolved in excess water and the solid coating residue can be removed by filtration Even if waste treatment or landfill disposal is needed the total solid waste volume generated by the sodium bicarbonate technology typically would be less than for methods using solvents

How Does It Work?

The sodium bicarbonate (baking soda) is delivered by a wet blast system to remove coating in this way Com pressed air moves the sodium bicarbonate medium from a pressure pot to a nozzle where the medium mixes with a stream of water The blast medium/water mixture accelerated to several hundred miles per hour impacts the coated surface and shatters into a very fine particulate The water prevents heat buildup in the substrate and helps control the dust generated when the media impact on the coating

Operational Features

The sodium bicarbonate coating removal technology operates mainly by abrasive action The wet blast svstem delivers a mixture of blast medium and water through a hand held hand actuated blast nozzle shown in Figure 1 The flow diagram (Figure 2) illus trates a typical configuration of the system

The exact operating conditions are specific to the type of coating and the substrate type and configuration The typical range for bicarbonate stripping applications is (Spears 1989)

Blasting pressure—20 to 70 psi
Angle of impingement—45 to 90°
Media flow rate—2 to 4 lb/min with a in nozzle
Water flow rate—0 5 gpm
Blasting standoff distance—12 to 24 in
Stripping rate—0 25 to 2 5 ft^2/min

Bicarbonate blast conditions can be selected to suit the coating and substrate

Other important parameters in bicarbonate coating removal system operation are

Type of coating to be removed
Nature of substrate material and its thickness
Media type and size
Nozzle size
Masking requirements
Types and capabilities of commercially available systems

Various bicarbonate media are available to allow balance of stripping rate and aggres siveness

Typically a nontoxic flow agent is included in the bicarbonate media to minimize caking in the blast pot The media come in six formulas to provide different mesh sizes for different applications

Composite formula
Maintenance formula[a]
Maintenance formula XL[a]
Profile formula
Aviation formula
Electronics formula

The wet blast system uses a pressurized nozzle designed to allow a low propellant pressure while maintaining a positive abrasive flow The low pressure of the air propellant minimizes damage to aluminum plastic composites and other sensitive materials Operators can adjust the blast pressure to remove one layer of coating at a time The pressure of the water can vary between 10 and 500 psi The air requirement is determined by blasting pressure and nozzle size For example when blasting at 60 psi for a 1/2 in nozzle 265 cfm of air is required that in turn requires a minimum of 66 HP electric compressor

As seen in Table 2 sodium bicarbonate blasting requires a medium skill level Abrasive media blasting requires an initial training period to familiarize the operator with the required stripping media supply pressure and the nozzle to surface distance and angle

[a] Maintenance formula and Maintenance formula XL are available with SupraKleen Rinse Accelerator to improve removal of surface contaminants or heavy coating if needed

124

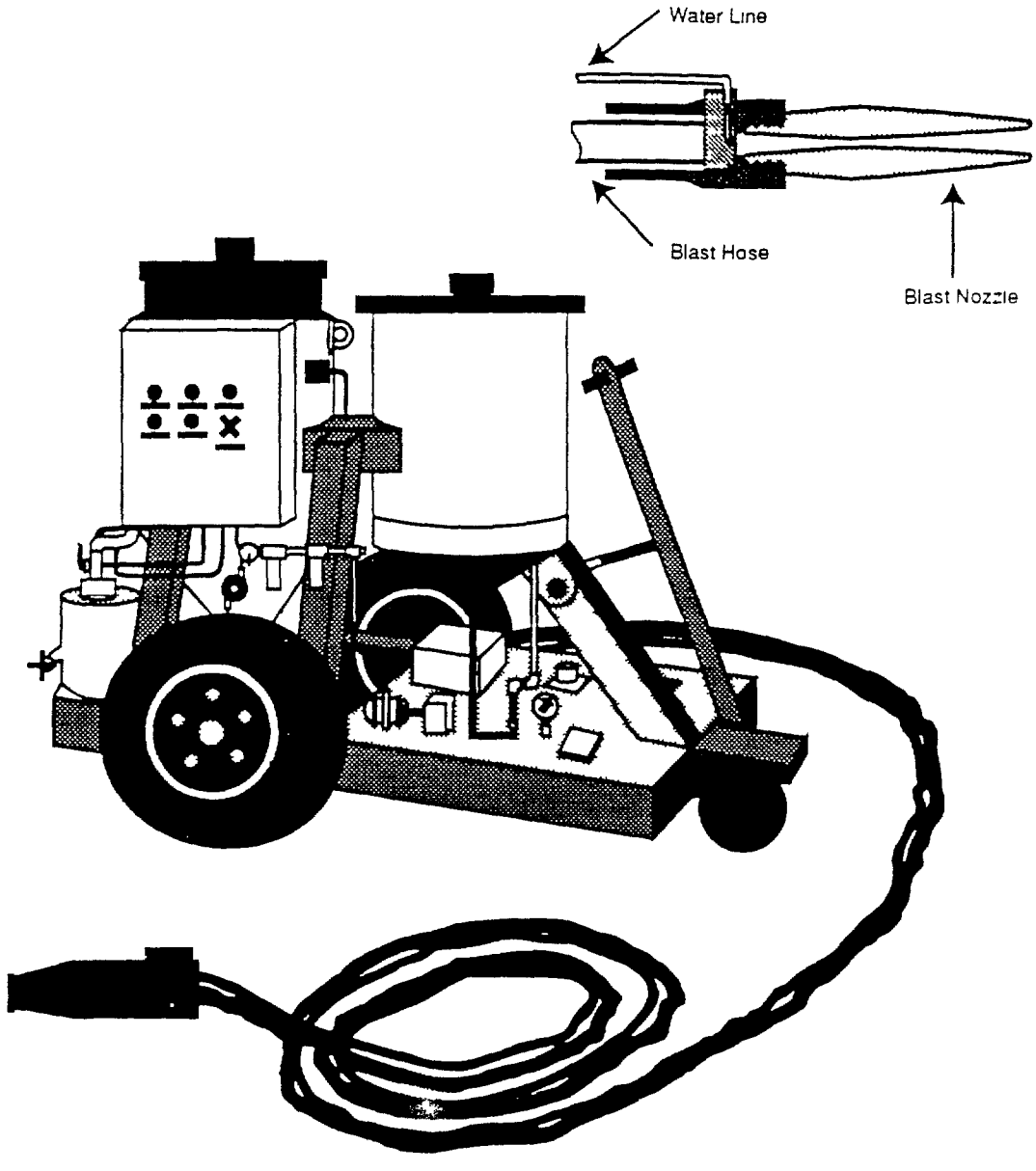

Source Schmidt Manufacturing Inc

Figure 1 Sodium bicarbonate system with wet blast head

With appropriate training operators should be able to perform the job without much difficulty

Equipment for sodium bicarbonate wet blasting is relatively inexpensive

Sodium bicarbonate blasting uses modified sand blasting equipment and is less expensive than equipment for PMB wheat starch blasting or carbon dioxide pellet blasting

The sodium bicarbonate medium costs more than traditional abrasive media such as sandblasting but is relatively inexpensive compared to PMB Startup costs may include facility revamping to allow installation of the wet blast system An exhaust ventilation system with cyclone separator and intake piping must be added to control blast media overspray if the sodium bicarbonate coating removal system is used indoors The sodium bicarbonate process often can be applied in existing solvent stripping facilities which also saves investment in facility revisions

Application

The technology has been applied for removal of both friable and elastomer organic coatings Substrate materials include thin and thick metal parts machinery and building surfaces Sodium bicarbonate or similar

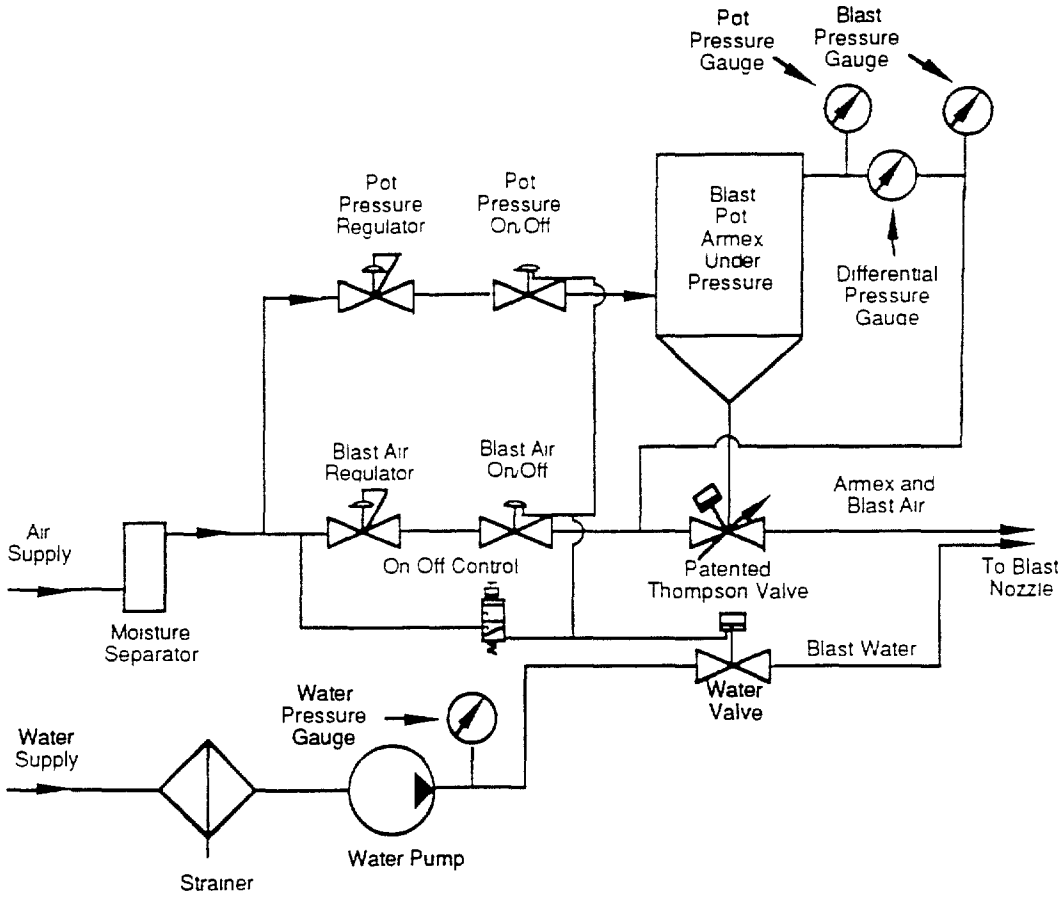

Source Schmidt Manufacturing Inc

Figure 2 **Flow diagram of sodium bicarbonate wet blast system**

water soluble abrasive technology has been tested or applied to the following

- Remove failing topcoat over a tight red lead primer on structural steel
- Clean and decoat surfaces of historical buildings including 19th century buildings in Manchester England the Parliament building and the Opera House in Vienna Austria the Statue of Liberty in New York and the Mormon Church in Salt Lake City without damaging sensitive surfaces
- Clean in situ disbonded coating from paper mill roller bearings
- Remove grease buildup from drive unit of paper machine dryer
- Remove graffiti from sandstone wall and factory finished metal siding
- Clean railcar wheels prior to magnetic particle inspection
- Decoat diesel locomotive sheet metal door (sandblasting had warped the panels)
- Clean valving with thick coating buildup on natural gas vaporizing tank
- Clean dirt and coating residue from aircraft parts without disassembling (Kline 1991)

The NASA Johnson Space Center (JSC) Aircraft Operation Division has used sodium bicarbonate to strip the surface of aircraft wheels prior to inspecting for cracks and structural defects Prior to use of the sodium bicarbonate product NASA used a phenolic based stripper and another earlier chemical stripper containing methylene chloride and other organic solvents Both stripping formulations required repetitive soaking and the costs for disposal of the solid and liquid wastes they generated were high (Chen and Olfenbuttel 1993)

Tennessee Eastman has used the sodium bicarbonate stripping to remove coating from equipment during operation The paper and pulp industry also has used the technology for cleaning paper production equip ment in place

Benefits

Some of the major beneficial aspects of sodium bicarbonate wet blasting include

- High stripping rate
- Can selectively remove individual coating layers (e g remove topcoat leaving primer)

126

In some applications bicarbonate stripping can reduce prewashing and masking of the surface needed prior to stripping
Use of water dissipates the heat generated by the abrasive process and reduces the amount of dust in the air
Wastewater stream is compatible with con ventional wastewater treatment plants available to many installations
Low cost stripping media and simple stripping equipment
No size limitations on the parts to be stripped

Limitations

Sodium bicarbonate coating stripping has several potential hazards and limitations

The sodium bicarbonate medium cannot be recycled for stripping
Operators should wear respiratory and eye protection equipment for protection from re bounding media and airborne particulate
The sodium bicarbonate blasting medium does not pose a health risk but the coating chips being removed may Airborne particulates generated during coating stripping may contain toxic elements from the coating being removed
An exhaust ventilation system should be used during sodium bicarbonate coating removal to remove the particulate cloud that forms as the blast medium strikes the surface
Operators should wear hearing protection due to high noise levels from blasting equipment
Uninhibited sodium bicarbonate and water residue can corrode substrates however current testing indicates that the corrosion potential of uninhibited formulations is similar to that of organic solvent strippers
Wastewater and bicarbonate residue disposal requirements will depend on the toxicity of the coating and pigments being removed
Slug discharge of bicarbonate (over about 3 000 ppm) can adversely affect the operation of an anaerobic digester

References

Chen A S C and R F Olfenbuttel 1993 Evaluating Bicarbonate of Soda Blasting Technology Its Potential in Pollution Prevention and Waste Reduc tion In *American Institute of Chemical Engineers — 4th Pollution Prevention Topical Conference*

Kline E S 1991 Sodium Bicarbonate Blasting *Painting & Wallcovering Contractor* July August pp 85 86 95

Larson N 1990 Low Toxicity Paint Stripping of Aluminum and Composite Substrates *First Annual International Workshop on Solvent Substitution* DE AC07 76ID01570 U S Department of Energy and U S Air Force Phoenix Arizona pp 53 60

Peebles H C N A Creager and D E Peebles 1990 Surface Cleaning by Laser Ablation *First Annual International Workshop on Solvent Substitu tion* DE AC07 76ID01570 U S Department of Energy and U S Air Force Phoenix Arizona

Spears W E 1989 Mechanical Test Program Paper presented at Bicarbonate of Soda Stripping Tecnni cal Interchange Meeting Southwest Research Institute San Antonio Texas June 21

Steiner R 1993 'Carbon Dioxide s Expanding Role *Chemical Engineering 100*(3) 114 119

Svejkovsky D 1991 Carbon Dioxide Paint Removal Status In *Proceedings of the 1991 DOD/Industry Advanced Coatings Removal Conference* San Diego California pp 344 393

Wasson N E Jr and M N Haas 1990 Sodium Bicarbonate Blasting for Paint Stripping *First Annual International Workshop on Solvent Substitu tion* DE AC07-76ID01570 U S Department of Energy and U S Air Force Phoenix Arizona

Carbon Dioxide Pellet Cryogenic Blasting

Pollution Prevention Benefits

Carbon dioxide (CO_2) stripping generates a smaller amount of waste than all of the available technologies and some of the emerging thermal technologies Upon impacting the surface being cleaned or decoated the CO_2 pellets disintegrate and sublime that is they pass directly from solid to gaseous state without appearing in the liquid state Because the CO_2 pellets return to the gaseous state after use the process does not generate a spent media residue The coating residue is collected dry without extraneous plastic beads grit or other impacting material Thus no recycling or separation of the media from the coating residue is required

The carbon dioxide pellets are produced from liquid CO_2 The liquid CO_2 is prepared industrially as a by-product of ammonia manufacturing (35%) alcohol and other chemical production (22%) oil and gas refining (20%) or by collecting and purifying CO_2 gas from natural gas vents (20%) or combustion process offgas (3%) (Steiner 1993) The purified CO_2 is compressed and liquefied The CO_2 from these sources would enter the atmosphere if it were not captured for industrial

127

use so carbon dioxide pellet blasting makes no net addition of new CO

The coating surface need not be washed before or after CO_2 blasting The process removes dirt oil and grease while stripping coatings so these surface contaminants do not interfere with the stripping action Because the media are not recycled there is no need for concern about dirt oil or grease contaminating the media In addition because the pellets sublime no media remain behind to contaminate the substrate so no poststripping rinse is needed As a result CO_2 pellet blasting does not produce a wastewater stream and thus eliminates the need for wastewater treatment

How Does It Work?

The carbon dioxide blasting systems have a refriger ated liquid CO_2 supply and a system for converting the liquid to the solid media used in coating removal Compressed liquid is allowed to expand in a pressure controlled chamber where the temperature drops from about 37°C (35°F) to about 78°C (-109°F) The temperature drop on expansion causes a mixture of CO_2 vapor and solid CO_2 snow to form The snow is collected compressed and extruded through a die to produce well defined pellets of a selected size and hardness as needed for the specific coating removal operation

CO pellet blasting applies a blast medium much the same way as does PMB Compressed air or liquid nitrogen thrusts small CO pellets at a coated surface Because the CO reverts to a gas the stripping media do not contaminate the substrate (Ivey 1990) A system for centrifugal acceleration of the pellets also is under development (Foster et al 1992)

The actual mechanism for coating removal is however different in CO_2 pellet blasting The CO pellets remove the coating by a combination of impact embrittlement thermal contraction and gas expansion The impor tance of each of these mechanisms in achieving coating removal is not yet defined

> *CO blasting uses a combination of impact and thermal mechanisms to remove the coating*

Unlike the other two processes that rely on impact and abrasion (PMB and wheat starch blasting) the frozen CO_2 pellets provide thermal shock or cracking They cryogenically sever the bond between the substrate and coating When the CO_2 pellets sublime upon impact the expanding gas can help remove the coating The air pressure blows the coating fragments off the substrate On multicoat surfaces the pellets rupture the weakest bond

Depending on the application CO_2 pellets can be propelled toward the substrate at subsonic sonic or supersonic speed The pellets typically are propelled at an impingement angle of between 30° and 75° to remove the coating The more severe the angle of impingement the more aggressive is the process The best angle and standoff depend on the coating material and substrate In one test the optimal removal rates occurred at an impingement angle of 75° with a stand off distance of 2 in

Due to the low temperatures generated by CO blast ing water condensation from the atmosphere can be a problem The gas supply to the blasting system must be dry The gas supply may be either dry air or nitro gen

Operating Features

CO pellet cryogenic blasting is best applied if there is a high penalty for contaminating the substrate surface if disassembly is difficult or expensive or if the residue resulting from coating removal is a high-hazard material For example CO_2 pellet cryogenic blasting can be used to clean radioactive-contaminated components Its use dramatically reduces the radioactive waste volume because no media remain behind to become contaminated

The CO_2 pellet technology can be custom configured for mobile manual fixed or automated online produc tion applications for use in a wide range of industries including

- Food processing
- Automotive manufacturing
- Electronics
- Aerospace

A dry compressed air stream expels CO_2 pellets through a gun and nozzle assembly (Boyce et al 1990) The pellets impinge on the coated surface and remove the coating by a combination of mechanisms The main process parameters for CO cryogenic stripping are

- Pellet size
- Pellet density
- Blast pressure
- Angle of impingement
- Media flow rate
- Blasting standoff distance
- Nozzle design (Svejkovsky 1991)

Optimizations typically change the propelling air pressure impingement angle or standoff distance (Larson 1990)

128

CO_2 blasting gives a slow, gentle stripping action

With regard to a frequently mentioned limitation slowness the reported coating removal rate for manual CO_2 pellet blasting ranges from 1 5 ft²/min to 0 1 ft²/min depending on the substrate being stripped and the coating color (Ivey 1990 Cundiff and Matalis 1990) The net average strip rate on an F 16 aircraft was 0 189 ft²/min per minute of nozzle time (0 13 ft²/min with worker effectiveness factored in) (Ivey 1990) The strip rate increased as the nozzle was widened The Alclad™ surfaces pulled the net average down The tested F 16 has 20% Alclad™ surfaces other U S Air Force aircraft have up to 80% Alclad™ surfaces Thus strip rates will slow considerably on equipment with a higher percentage of Alclad™ surfaces

In fact the process as tested cannot remove all the coating from Alclad™ surfaces The Alclad™ surface left by CO_2 pellet blasting must be removed by another process to provide an adequate surface for recoating

Held at chest level the blast nozzle and hose weigh about 20 lb When blasting underneath the aircraft another 10 lb of thrust is added In tests workers traded off the duty to other workers every 15 min The newer automated systems are easier to work with strip faster and are safer on sensitive materials because the optimal pressure and impingement angle can be maintained

Special techniques can increase the stripping rate for CO_2 blasting

The preliminary results indicate that combining CO pellet blasting with other technologies may improve CO pellet blasting performance in certain applications Combinations considered in the literature are

- CO_2 pellets + flashlamp vaporization to enhance effectiveness of the flashlamp process alone and to get where the flashlamp cannot reach (Bur cham 1993)
- CO pellets + chemical softener (i e benzyl alconoli to speed up the stripping rate
- CO pellets + laser vaporization to enhance effectiveness of the laser alone

Preliminary studies indicate that none of these com bined technologies comes close to the overall desir ability of using CO_2 pellets alone However further testing may reveal that one or more of these combined technologies has a specialized application or may be useful on thin skin materials The combinations may make CO_2 more cost effective to use As currently defined CO_2 pellets used alone damage unsupported aluminum alloys that are less than 0 032 in thick The peening damage caused by the pressures required for effective stripping could prevent use of CO on up to 20% of cargo aircraft skins (Ivey 1990)

Chemical softeners applied before CO_2 pellet blasting would allow less blasting pressure and thus decrease damage to thin skin aluminum Chemical softeners also would provide more thorough and faster stripping at well over 1 ft²/min but could require aircraft preprocess ing tasks such as degreasing and masking and would generate more disposable waste Softeners could damage aircraft materials (Ivey 1990)

Combined with flashlamp vaporization CO pellet cryogenic blasting may be useful on thin skin materials The CO_2 + flashlamp combination may increase stripping speed to 3 ft²/min and promises to reduce the aggressiveness of the CO_2 pellets used alone (Ivey 1990)

Improvements have been made to make CO_2 cryogenic blasting systems easier to handle

Assistive devices have been developed to make the blast nozzle and hose less bulky These save on the time needed for stripping and improve stripping quality The robotic system at least doubles the stripping rate The improved technology using either robotics or manipulator arms could provide the precision needed to avoid peening damage on thin aluminum skins (Ivey 1990)

The material requirements include

- Tank of liquid CO (supply ranging from 181 kg/hr to 658 kg/hr)
- Skid mounted unit (compressor with maximum output of 430 psi pelletizing unit propellant system etc)
- Variety of nozzle assemblies
- Minimum 30 ft² of work area
- Optional robot or manipulator arms
- Breathing apparatus if CO levels rise above 1 5% for 10 min or 0 5% for continuous use or dust masks if breathing apparatus not needed
- Electricity to freeze the CO_2 pellets and acceler ate them (@ $ 10/lb or $40/hr in 1984 $)

Figure 3 shows a set of typical CO_2 blast system components

With the nonautomated nozzles and hoses operators require strength and stamina The evolving automated equipment will require a medium level of skill to control

129

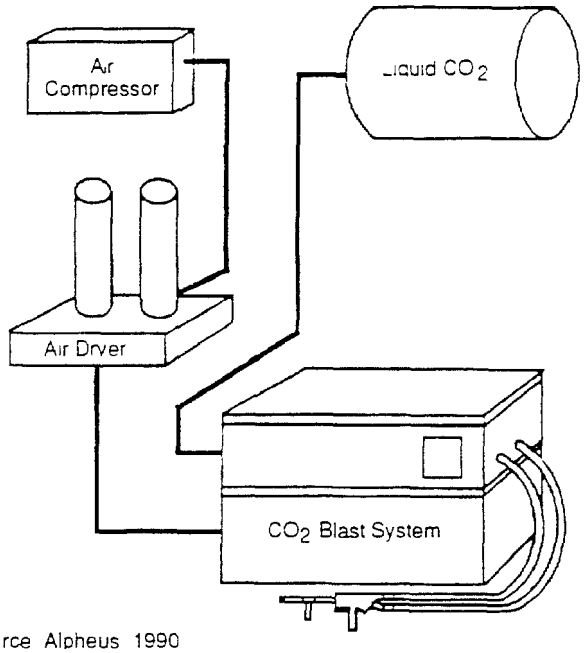

Source Alpheus 1990

Figure 3 A typical liquid CO_2 blast system

the pressure relative to distance Operators must take care not to damage the thinner substrates

Potential operator exposure to high levels of CO_2 also is a concern with CO_2 pellet blasting The greatest health concern presented by CO is the risk of suffocation (Steiner 1993) An atmosphere with at least 19 5% oxygen generally is considered safe At 19 5% oxygen if the remainder is CO the atmosphere is unsafe For continuous exposure during an 8 hour workshift OSHA sets an acceptable maximum concentration of 1% CO in air

Depending on the degree of automation adopted CO pellet blasting could involve high capital cost and relatively low labor cost The capital cost is greater than for PMB To strip a large part within a reasonable amount of time would require multiple nozzles A high continuous throughput application would be needed to justify the capital cost of a CO_2 system

CO eliminates many of the costs associated with chemical processes and with some of the other cleaner coating removal technologies By eliminating such costs as pre and poststripping cleanup media disposal media separation/recycling and aqueous waste disposal costs the overall system cost for CO stripping can be competitive For example CO_2 stripping is reported to have an average cost of $5/ft² for typical applications The CO cost compares favorably to the reported cost of $19+/ft² for available chemical processes (Schmitz 1990)

Application

CO pellet cryogenic blasting has undergone field testing on F 16 aircraft frames It is not considered aggressive enough to remove polyurethane topcoat (Kopf and Cheney 1989)

More than 50 systems have been custom configured for direct or contractor applications worldwide for the automotive military aircraft and food processing industries

The CO cryogenic technology can be applied near moving parts without interrupting the power source It can be used on sensitive electronic components that would be damaged by other cleaning technologies (Cold Jet Inc 1989)

CO_2 pellet blasting has been investigated for possible use as an aircraft coatings removal process (Ivey 1990) This technology has successfully cleaned up mould tools coating jigs extruder screws and general grease and oil contamination

Benefits

Some of the major beneficial aspects of CO_2 pellet cryogenic blasting include

- CO_2 media vaporize leaving only a small volume of dry coating residue waste
- Eliminates water use
- Has a clean and well defined coating removal pattern (Cundiff and Matalis 1990)
- Can selectively remove individual coating layers (e g remove topcoat leaving primer)
- Pre or poststripping cleanup requirements typically are minimal
- No masking is needed except for delicate materials such as soft clear plastics
- Equipment can be stripped without requiring disassembly
- No separation/recycling system needed
- No media disposal costs incurred
- Pellets driven into interstitial spaces vaporize leaving no residue
- Benign to most substrates surface damage minimal for a clad or bare surface (Cundiff and Matalis 1990)
- No size limitations on parts to be stripped

Limitations

Hazards and limitations of CO_2 pellet blasting include

- Generates solid waste containing coating chips which may be hazardous however media do not add to the volume

130

Ventilation required to avoid potentially danger ous CO_2 concentrations in the coating stripping area (>1 5% short term or > 0 5% 8 hr average)
Possible worker exposure to extreme cold
Operators should wear respiratory and eye protection equipment for protection from re bounding media and airborne particulates
Operators should wear hearing protection due to high noise levels from blasting equipment
Rebounding pellets may carry coating debris and contaminate the work area or workers

- Large local temperature drops can occur but are confined mainly to the surface layer
There is potential hazard from compressed air and/or high velocity CO_2 pellets
Static energy can build up if no grounding is provided (Cundiff and Matalis 1990)
Some coating debris may redeposit on substrate
Low temperature can cause condensation on substrate
A slight quantity of coating particles are emitted to the air requiring a standard air filtration system
May damage thermoset composite materials unless close attention is paid to dwell time and stand-off distance
Difficult to control coating removal on graphite-epoxy composites perhaps because of brittle-ness (Cheney and Kopf 1990)
Slight reduction of fatigue life of metal substrates (Cundiff and Matalis 1990)
Peens and damages soft aluminum less than 0 020 in thick (Larson 1990)
Particularly slow on Alclad™ coated aluminum skins and thermoset composites
Nonautomated system fatigues workers quickly because of cold weight and thrust of blast nozzles (Ivey 1990 Wolff 1984)

References

Alpheus 1990 *CO_2 Cleanblast* Alpheus Cleaning Technologies Rancho Cucamonga California

APCI (Air Products and Chemicals Inc) 1984 *Coat ings Removal Competitive Technology Review* Allentown Pennsylvania Rev 1 November 19

Boyce G L Archibald and P Andrew 1990 Cryo genic Blasting as a Tool Cleaning Process In *Proceedings of the 1990 DOD/Industry Advanced Coatings Removal Conference* Atlanta Georgia pp 261 303

Burcham D H 1993 FLASHJET Coatings Removal Process In *Proceedings of the 1993 DOD/Industry Advanced Coatings Removal Conference* Phoenix Arizona pp 316 333

Cheney J and P Kopf 1990 Paint Removal and Protective Coating Development In *Proceedings of the 1990 DOD/Industry Advanced Coatings Removal Conference* Atlanta Georgia pp 372 395

Cold Jet Inc 1989 *The Force of Nature* Videotape presentation Loveland Ohio

Cundiff C and T Matalis 1990 A Preliminary Evaluation of Paint Removal by a Carbon Dioxide Pellet Blast System In *Proceedings of the 1990 DOD/Industry Advanced Coatings Removal Conter ence* Atlanta Georgia pp 304 329

Foster C S P W Fisher C C Tsai and D E Schecter 1992 A Centrifuge Accelerator CO Pellet Cleaning System In *Third Annual Interna tional Workshop on Solvent Substitution* U S Department of Energy and U S Air Force Phoenix Arizona

Ivey R B 1990 Carbon Dioxide Pellet Blasting Paint Removal for Potential Application of Warner Robins Managed Air Force Aircraft *First Annual International Workshop on Solvent Substitution* DE AC07 76ID01570 U S Department of Energy and U S Air Force Phoenix Arizona pp 91 93

Kopf P W and J Cheney 1989 Paint Removal from Composite Substrates Advances Abrasives Cryogenics and Eximer [sic] Lasers In *Pro ceedings of the 1989 DOD/Industry Advanced Coatings Removal Conference* Ft Walton Beach Florida pp 122 169

Larson N 1990 Low Toxicity Paint Stripping of Aluminum and Composite Substrates *First Annual International Workshop on Solvent Substitution* DE AC07 76ID01570 U S Department of Energy and U S Air Force Phoenix Arizona pp 53 60

Schmitz W N 1990 CO_2 Pellet Blasting for Paint Stripping/Coatings Removal *First Annual Interna tional Workshop on Solvent Substitution* DE AC07 76ID01570 U S Department of Energy and U S Air Force Phoenix Arizona pp 11 13

Svejkovsky D 1991 'Carbon Dioxide Paint Removal Status In *Proceedings of the 1991 DOD/Industry Advanced Coatings Removal Conference* San Diego California pp 344 393

Wolff E B 1984 *The Impact of EPA and OSHA Regulations on Paint Stripping* Air Products and Chemicals Inc Allentown Pennsylvania

131

High-Pressure Water Blasting

Pollution Prevention Benefits

High pressure water blasting eliminates the use of chemical strippers containing HAPs However waste water is generated that contains paint debris The stripping water can be recycled to reduce waste volume The spent stripping water must be collected and then either processed for reuse in the stripper or treated for disposal Unlike dry stripping processes water stripping does not generate dust

How Does It Work?

High pressure waterjet stripping removes coating with a stream of water projected from specially designed nozzles at pressures of 15 000 psi to 30 000 psi or more High pressure pumps supply water to a system of rotating nozzles that spray the water stream onto the coated surface The coating is removed by the kinetic impact of the water stream

Operational Features

High pressure water stripping will be performed by robotically manipulated equipment to control nozzle movement over the surface to be stripped Process development testing for stripping polyurethane topcoat from primed and clad 2024 T3 aluminum alloy used a nozzle travel rate of 1 25 in/sec and rotation speed of 400 rpm Additional operating conditions included (Stone 1993)

- Blasting pressure maximum 24 000 psi
- Blasting standoff distance 1 3 in
- Stripping rate 1 25 to 1 7 ft^2/min

Application

The U S Air Force currently is supporting development of a Large Aircraft Robotic Paint Stripping facility (Hofacker et al 1993) The facility is designed to use high pressure water blasting in a fully automated system Aircraft to be stripped include B 52 C 135 E 3 and B 1

The U S Navy is developing a high pressure water garnet abrasive slurry stripping system for paint removal and surface preparation on ship surfaces Testing of a manual system was completed and a semi automatic system has been designed and as sembled The system operates with a water pressure higher than 35 000 psi The blasting slurry is dis charged through a rotating blasting head with four nozzles The reported stripping rate is about 2 5 ft^2/min The estimated cost of the high pressure blasting system is $150 000 and the unit cost of the garnet abrasive is $300/ton (U S Army 1992)

Benefits

Some of the major beneficial aspects of high pressure water blasting include

- The technology has a high stripping rate
- Stripping water is recycled
- Wastewater stream is compatible with conven tional wastewater treatment plants available to many installations
- There are no size limitations on parts to be stripped

Limitations

Potential hazards and limitations of high pressure water blasting include

- Coating debris sludge may be a hazardous waste
- Wastewater and residue disposal requirements will depend on the toxicity of the coating and pigments being removed
- A system must be available to collect filter and recycle stripping water containing coating debris (and in some systems abrasives)
- Workers must be protected from direct impinge ment of water jet due to extreme danger from >15 000 psi water jet
- Robotic applications are required due to high reaction forces and high hazard from water jet
- There is a high capital cost for the robotic sys tem
- A misapplied water jet will damage the substrate
- The blasting operation generates high noise levels
- Water can enter cavities
- Water can penetrate and/or damage joints seals and bonded areas

References

Hofacker S A D W See and W A Cain 1993 The Large Aircraft Robotic Paint Stripping (LARPS) System In *Proceedings of the 1993 DOD/Industry Advanced Coatings Removal Conference* Phoenix Arizona pp 476-489

Howlett Jr J J and R Dupuy 1993 Ultrahigh Pressure Water Jetting for Deposit Removal and Surface Preparation *Materials Performance 32*(1) 38-43

132

Stone A 1993 An Evaluation of High Pressure Waterjet as an Alternative Paint Removal Method Summary of the Large Aircraft Robotic Paint Stripping (LARPS) Process Validation In *Proceedings of the 1993 DOD/Industry Advanced Coatings Removal Conference* Phoenix Arizona pp 400 515

U S Army 1992 *Installation Restoration and Hazardous Waste Control Technologies* CETHA TS CR 92053 U S Army Corps of Engineers Toxic and Hazardous Materials Agency Aberdeen Proving Ground Maryland

Medium-Pressure Water Blasting

Pollution Prevention Benefits

Medium pressure water blasting eliminates the use of chemical strippers containing HAPs However waste water is generated containing paint debris The stripping water can be recycled to reduce waste volume The spent stripping water must be collected and then either processed for reuse in the stripper or treated for disposal In some applications the water may contain small quantities of alcohol or a similar organic solvent Unlike dry stripping processes water stripping does not generate dust

How Does It Work?

Medium pressure water blasting removes coatings with a stream of water projected from specially designed nozzles at pressures of 3 000 psi to 15 000 psi Heavy duty pumps typically in the 15 to 600 hp range supply water at high pressure The water is sprayed through a nozzle or system of rotating nozzles onto the coated surface The coating is removed by the kinetic impact of the water stream The stripping action often is supplemented by presoftening with an alcohol solvent or by including soft or hard abrasives in the water stream

Operational Features

Water jet blasting has been used on an industrial scale for many years to clean a variety of corrosion grease or other deposits from metal surfaces (Howlett and Dupuy 1993) Several implementations of medium pressure water blasting for coating removal are being developed and have reached varying stages of maturity Variations include water blasting alone water blasting with a solvent presoak and water propelling abrasive media such as sodium bicarbonate Systems using water only or water with a solvent presoak typically use a rotating nozzle Systems with abrasive propelled by water typically use a fan nozzle

Portable water blasting stripping systems are in use for stripping floor gratings in paint booths Two or four nozzles are carried on a rotating fixture Several of the rotating nozzle assemblies are mounted in an enclosure The enclosure has wheels so it can be moved over the booth floor The rotating nozzles spray a high-pressure water stream onto the booth floor The enclosure protects the operator and prevents the spread of water spray and paint debris (Bailey 1992)

In response to a West German governmental directive to minimize VOC emissions in industrial processes the German airline Lufthansa developed the Aquastripping process to strip old coating from aircraft (*New Scientist* 1990) Water stripping is preceded by a 3 hour dwell time presoak with an alcohol softener The water stripping is performed by manually controlled mechanized arms each carrying rotating nozzles for the bulk of the aircraft surface One recent implementation uses six nozzles on one stripping head (Boeing 1993) The nozzle rotation speed is 3 500 rpm The undersides of the wings are stripped with a counterbalanced hand manipulated stripping nozzle Operating conditions include

- Blasting pressure maximum 7 350 psi typical 5 100 psi
  Water flow rate 50 gpm
  Blasting standoff distance 1 to 4 in
  Stripping rate 5 ft^2/min

Medium-pressure water blasting systems combined with abrasives such as sodium bicarbonate are being tested

Medium pressure water blasting systems are also being developed using abrasive additives One system being tested uses bicarbonate as the abrasive (Petkas 1993) The system differs from the low pressure bicarbonate blasting system in that the operating pressure is higher resulting in much lower abrasive use rate Reported test conditions for stripping clad and bare 2024 T3 aluminum are

Blasting pressure—3 000 psi
Angle of impingement—45°
Media flow rate—1 0 to 1 75 lb/min
Stripping rate—0 56 ft^2/min to 0 69 ft^2/min

Application

The automotive industry has found medium pressure water stripping to be very efficient for cleaning floor grates overhead conveyers rails and part support hooks in water wall spray paint booths (Bailey 1992) Portable water spray units provide removal rates in the range of 15 to 30 ft^2/min No abrasive is used and the stripping water is not recycled The paint booth water

133

collection and treatment system is used to handle the stripping water

A prototype test facility for medium pressure water blasting with sodium bicarbonate abrasive is planned for installation at Warner Robbins Air Force Base in early 1994

Benefits

Some of the major beneficial aspects of medium pressure water jet stripping include

- Low implementation cost using simple robust equipment
- High stripping rates
- Wastewater stream is compatible with conventional wastewater treatment plants available to many installations
- No size limitations on parts to be stripped

Limitations

Potential hazards and limitations of medium pressure water jet stripping include

- Coating debris sludge may be a hazardous waste
- Wastewater and residue disposal requirements will depend on the toxicity of the coating and pigments being removed
- A system must be available to collect filter and recycle stripping water containing coating debris (and in some systems abrasives or alcohol softener)
- Workers must be protected from direct impingement of water jet
- Operators should wear respiratory and eye protection equipment for protection from water spray and airborne particulate
- Operators should wear hearing protection due to high noise levels from blasting equipment
- Mechanized applications are typical due to high reaction forces and high hazard from water jet
- A misapplied water jet will damage the substrate
- Water can enter cavities
- Water can penetrate and/or damage joints seals and bonded areas

References

Bailey J 1992 Strip It Off *Industrial Finishing 68*(2) 24 27

Boeing 1993 Paint Stripping *1993 Structure Conference* SE ACM 3 1 93 Boeing Commercial Airplane Group Section 10 Service Engineering

Howlett Jr J J and R Dupuy 1993 Ultrahigh Pressure Water Jetting for Deposit Removal and Surface Preparation *Materials Performance 32*(1) 38 43

New Scientist 1990 Cold Water Treatment for Painted Planes *New Scientist* August p 35

Petkas P J 1993 A WhiteMetal Inc Innovation — The BOSS System That Really Works Technically and Cost Effectively In *Proceedings of the 993 DOD/Industry Advanced Coatings Removal Conference* Phoenix Arizona pp 466 475

Liquid Nitrogen Cryogenic Blasting

Pollution Prevention Benefits

The liquid nitrogen cryogenic coating stripping process eliminates solvent use and results in no ash or residual to clean No fumes smoke or chemicals are released A small volume of coating residue and spent plastic blasting media are collected dry for disposal If hazardous metals or unreacted resins are present the residue may be a hazardous waste Liquid nitrogen is used to cool the part and to help propel plastic bead blasting media The process does not use air to propel the media so neither dust nor wastewater is generated (Stroup 1991)

How Does It Work?

Unlike the classical solvent technologies that address the chemical properties of coatings cryogenic coating removal addresses their physical properties i e the coefficient of thermal contraction and the cryogenic brittle transition temperature The cryogenic technology takes advantage of extreme cold to embrittle and shrink the coating The part to be stripped is cooled by a readily available cryogenic fluid liquid nitrogen Nitrogen is inert colorless odorless noncorrosive and noncombustible

The liquid nitrogen is sprayed on items to be stripped as they rotate on a spindle within a stainless steel cryogenic chamber The liquid nitrogen chills the coating causing greater thermal contraction of the coating than of the substrate Tensile stresses thus develop within the coating and make it brittle High velocity nonabrasive plastic pellets (media) are then blasted by centrifugal throw wheels to make the coating crack debond and break away from the substrate

The fixtures emerge from the chamber clean The dry coating residue and plastic media are collected and separated so that the media can be reused Meanwhile the liquid nitrogen warms and evaporates

134

changing back to a gas The harmless nitrogen gas is vented out to the atmosphere where it originally came from (APCI 1984a)

Operational Features

Liquid nitrogen cryogenic coating removal works well for removal of heavy coating buildups such as those that accumulate on coating line fixtures The heavy coating buildups can interfere with parts loading and maintenance service to these fixtures For electrostatic coating application systems the supports must be clean to promote good electrical contact between the part and the holder Typical coating line fixtures include

Coating hangers
Conveyor racks
Masks
Grates (APCI 1982 Products Finishing 1983)

Removal of acrylic alkyd lacquer polyester and vinyl coatings has been successful removal of epoxy and urethane coatings has been less successful (APCI 1984a Mathur undated) However Products Finishing (1983) reports successful stripping of urethane coat ings and adds phenolics to the list According to APCI (1984a) and Mathur (undated) coating thicknesses ranging from 0 010 to 0 500 in give the best results coatings thinner than 0 010 in do not readily debond Products Finishing (1983) reports success on tests on film as thin as 0 005 in depending on the formulation

Liquid N_2 cryogenic blasting uses cold supplemented by impact to provide rapid removal of thick coatings particularly from paint line equipment

Parts to be stripped (except hooks) are placed on a loading tree and lifted onto a rotating spindle at the top of the cryogenic chamber The refrigerant liquid nitro gen coats the surface so that the impact of the plastic pellets debonds and knocks off the cracked coating chips The residue of coating and plastic media collects at the bottom of the chamber and is conveyed to a separator The separator divides the residue into oversized chips media and undersized chips The media are returned by conveyor back to the throw wheels

Most coatings become brittle if subjected to tempera tures that are below 73°C (100°F) Cryogenic coating removal relies on the boiling temperature of nitrogen (196°C [320°F]) to embrittle and shrink the coating so that the high velocity nonabrasive plastic pellets can knock off the coating particles without damaging the fixture The process requires a chamber and compo nents specially designed and built for low-temperature use Figure 4 shows the chamber rotating spindle and separation areas

The media can reach recesses and shaded surfaces

Operators manage and optimize the decoating process from a control panel They can program temperature blast time wheel speed and media flow for automatic operation or they can control these variables manually Interlock systems must be provided to protect opera tors from the intense cold and the rotating equipment The outer door can be opened between cycles but the inner door prevents entry to the cryogenic chamber Guards and covers shield all moving parts

One cycle lasts 5 to 15 min (typically 10 min) Although the cryogenic technology works best when all parts are readily exposed to the two throw wheels the high velocity turbulent plastic media cloud can reach recesses and shaded surfaces on repeated rebounds at such high velocity Hooks touching adjacent hooks have been effectively cleaned around the entire circumference (APCI 1984a)

Energy requirements for liquid N_2 cryogenic blasting are low

A typical cryogenic system includes a stainless steel cryogenic chamber with double doors a liquid nitrogen delivery system a rotating fixture support two cen trifugal throw wheels conveyors and a media-coating cyclone separator with a hopper for recycled media The total system occupies a length width and height of 16 ft x 15 ft x 12 ft

The cryogenic technology requires no heat Energy requirements therefore are low The compressed air requirement is 1 cfm @ 90 psig A small amount of electricity (10 kW) is used to condense air into liquid nitrogen and to operate the throw wheels and convey ors (APCI 1982 1984a)

The actual operation of cryogenic stripping is relatively simple once the appropriate operating cycle is estab lished for the specific parts and coatings to be stripped The required skill level for routine loading and stripping is therefore lower than for solvent stripping units which require the operator to handle potentially hazard ous chemicals

The cryogenic stripping equipment is however more complex than stripping tanks The equipment for the cryogenic system may be unlike other equipment in a typical small or medium sized coating shop so new maintenance skills may need to be learned

135

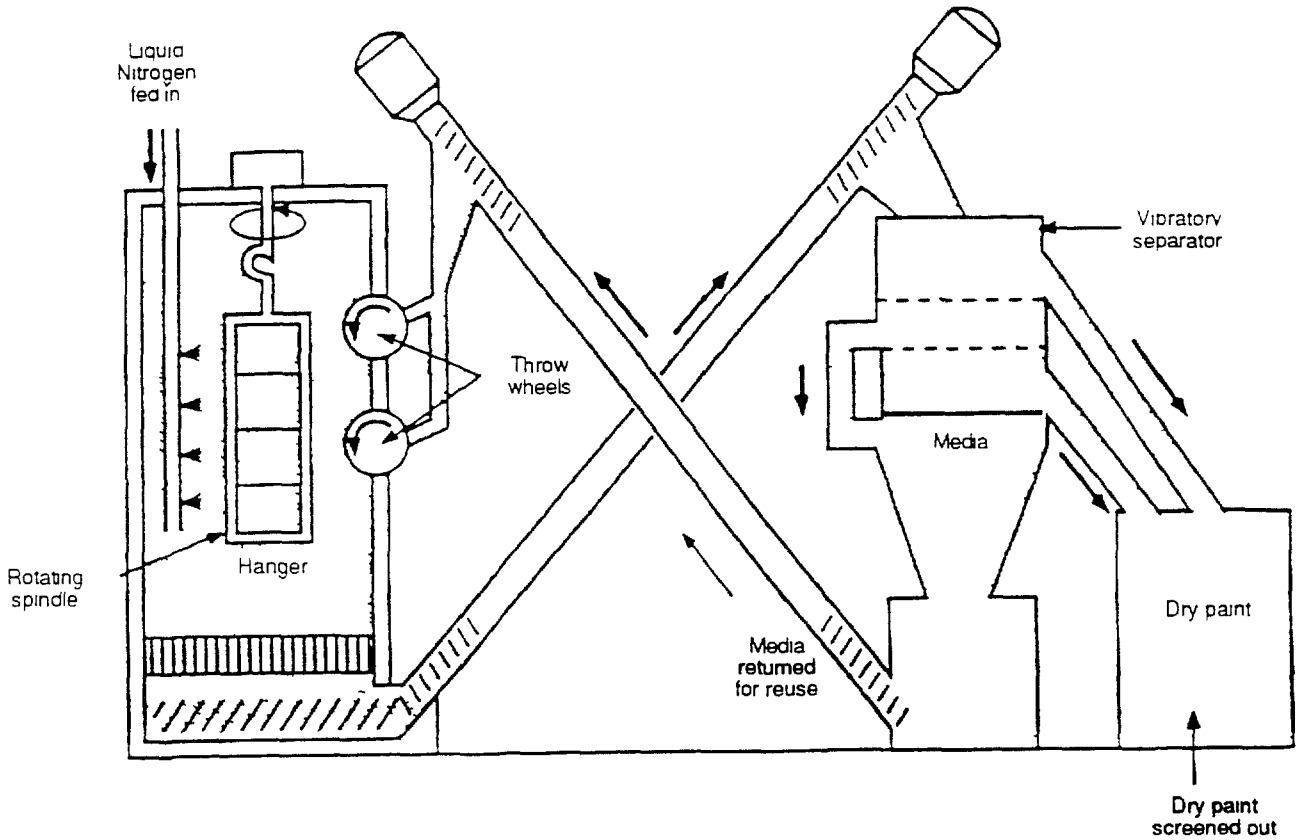

Figure 4 Operation of cryogenic coating removal process equipment

Application

The equipment used in cryogenic coating stripping is costly In 1984 the system cost $130 000 plus a royalty fee of $10 000 The operating cycle cost of $5 to $15 (APCI 1984b) combines with the high throughput to bring the cost down when frequent use justifies the capital outlay Because of its speed labor costs are reduced

When throughput requirements are high enough to justify the equipment purchase cryogenic coating stripping can reduce the costs of

- Hazardous solvent sludge disposal
- Cleaning after stripping
- Facility damage from fire or explosion
- Measures to ensure worker safety (APCI 1984a Mathur undated)

Payback within 1 year is possible using the liquid N_2 cryogenic blasting technology

A major auto manufacturer reported payback within 1 year on a prototype cryogenic coating removal system (Products Finishing 1983)

Factors that influence the operating cost are

- Average loading of the system
- Mass and surface area of the fixtures
- Coating type and thickness
- Tradeoffs of cycle time vs cooling
- Unload reload interval

One appliance maker uses a cryogenic coating re moval system to strip its inventory of more than 13 000 coating hangers and racks The cryogenic system removes the baked on overspray acrylic coating in 10 min cycles Loads range from 12 to 60 hangers averaging 375 hangers/day Stripping costs averaged about $0 54 each in 1985 dollars The dry coating chips are collected in a drum for disposal

The company reports no damage to its fixtures from the cold Workers can handle the parts without gloves 5 to 10 min after removal from the cryogenic chamber (APCI 1985)

The high capital cost of cryogenic coating stripping equipment has limited the breadth of industrial appli cation However the technology is used to rapidly

136

remove heavy layers of coating in applications requiring high throughput

Benefits

Some of the major beneficial aspects of liquid nitrogen cryogenic blasting include

- No ash residue
- Low waste volume
- Coating waste chemically unaltered
- Eliminates water rinse
- Very fast cycle time (5 to 15 min)
- High throughput rate
- Works well on thick coating buildups

Limitations

Potential hazards and limitations of liquid nitrogen cryogenic stripping include

- Generates small volume of coating chips and spent plastic media which may be hazardous due to coating constituents
- May require ventilation system to avoid potentially dangerous nitrogen concentrations in the coating-stripping area
- Requires workers to wear long sleeves and gloves during unloading
- Not effective on thin coatings (those of ≤0 010 in)
- Less effective on epoxies and urethanes
- Existing technology limits part size to less than 6 ft tall and 38 inches in diameter
- Part weight limited to less than 400 lb per cycle

References

APCI (Air Products and Chemicals Inc) 1982 *Cryo Strip™ Cryogenic Coating Removal System* Air Products and Chemicals Inc Allentown Pennsylvania

APCI (Air Products and Chemicals Inc) 1984a *Freezing Paint for Removal* Reprinted from May 1984 issue of *Industrial Finishing* Hitchcock Publishing Company

APCI (Air Products and Chemicals Inc) 1984b *Coatings Removal Competitive Technology Review* Rev 1 Air Products and Chemicals Inc Allentown Pennsylvania

APCI (Air Products and Chemicals Inc) 1985 Stripping Paint Hangers Cryogenically Reprinted from January 1985 issue of *Industrial Finishing* Hitchcock Publishing Company

Mathur A Undated Untitled paper on cryogenic coating removal Air Products and Chemicals Inc Allentown Pennsylvania

Products Finishing 1983 Cryogenic Paint Stripping PF Special New Product Report Reprinted from December 1982 issue of *Products Finishing* Gardner Publications Cincinnati Ohio

Stroup G D 1991 Letter from Stroup of Air Products and Chemicals Inc (APCI) Allentown Pennsylvania to Lawrence Smith of Battelle Columbus Ohio about the APCI patented CCR™ (Cryogenic Coating Removal) process September 27

Wolff E B 1984 *The Impact of EPA and OSHA Regulations on Paint Stripping* Air Products and Chemicals Inc Allentown Pennsylvania

137

SECTION 3
EMERGING TECHNOLOGIES

How To Use the Summary Tables

Three emerging cleaner coating removal technologies are evaluated in this section namely

Laser heating
Flashlamp heating
Ice crystal blasting

Tables 3 and 4 summarize descriptive and operational aspects of these technologies Readers are invited to refer to the summary tables throughout this discussion to compare and contrast technologies

Descriptive Aspects

Table 3 shows the main **Coating Removal Mechanism(s)** of each emerging technology It lists the **Pollution Prevention Benefits, Reported Application, Benefits** and **Limitations** of each emerging cleaner technology

Operational Aspects

Table 4 shows the key operating characteristics for the emerging technologies This table and Table 3 give users a concise indication of the range of technologies covered to allow preliminary identification of technologies that may be applicable to specific situations Tables 3 and 4 contain evaluations or annotations describing each emerging cleaner technology

The summary tables will help identify possible candidate cleaner technologies

In Table 4 **Process Complexity** is qualitatively ranked as high medium or low based on such factors as the number of process steps involved and the number of material transfers needed **Process Complexity** is an indication of how easily the new technology can be integrated into existing plant operations A large number of process steps or input chemicals or multiple operations with complex sequencing are examples of characteristics that would lead to a high complexity rating

Use the information in the text from the references and from industry and trade groups to get more detail on the best candidates

The **Required Skill Level** of equipment operators also is ranked as "high "medium or "low " **Required Skill Level** is an indication of the level of sophistication and training required by staff to operate the new technology

A technology that requires the operator to adjust critical parameters would be rated as having a high skill requirement In some cases the operator may be insulated from the process by complex control equipment In such cases the operator skill level is low but the maintenance skill level is high

Table 4 also lists the **Waste Products** and **Emissions** from the emerging cleaner technologies to indicate tradeoffs in potential pollutants the waste reduction potential of each and compatibility with existing waste recycling or treatment operations at the plant The **Capital Cost** and **Energy Use** columns provide a preliminary measure of process economics The **Capital Cost** is a qualitative estimate of the initial cost impact of the engineering procurement and installation of the process and support equipment compared to current coating removal equipment

Due to the diversity of cost data and the wide variation in plant needs and conditions it is not possible to give specific cost comparisons Cost analysis must be plant specific to adequately address factors such as the type and age of existing equipment space availability throughput product type customer specifications and cost of capital Where possible sources of cost data are referenced in the discussions of each cleaner technology

Table 3 Emerging Cleaner Technologies for Coating Removal Descriptive Aspects

Technology/ Coating Removal Mechanism	Pollution Prevention Benefits	Reported Application	Benefits	Limitations
Laser Heating Thermal	Replaces solvents Produces a volume of ash residue smaller than the original coat ing volume	Provides coating removal and/or cleaning Often used in conjunction with CO_2 pellet blasting Best when used with robotic systems	Results in a very small volume of waste Requires minimal training Allows topcoat to be stripped without remov ing primer No substrate damage detected under a vari ety of conditions Does not damage electronic components or change metallurgical properties Can remove coating between clamped to gether surfaces to a depth of 1 32 in Does not damage composites Control systems can be minimal Particulates easy to collect for disposal	Requires offgas collection and filtration for particulates Requires laser barrier wall to protect work ers from lethal energy laser beam Requires air flow or other collection mechanism to prevent ash redeposition on the substrate Can generate products of incomplete combustion
Flashlamp Heating Thermal	Replaces solvents Produces a small volume of ash waste	Provides coating removal and/or cleaning Often used in conjunction with CO_2 pellet blasting	Results in a very small volume of waste	Requires offgas collection and filtration for particulates Can generate products of incomplete combustion Leaves oily residue on substrate
Ice Crystal Blasting Impact/ Abrasive	Replaces solvents Media are nontoxic Produces a small volume of coating chip waste	Good for use in confined space such as submarine interior Useful on aluminum and composite substrates	Generates low volume of dry waste (none from the media) No media separation/recycling system need ed	Generates small volume of coating chips which may be a hazardous waste Potential for worker injury from high velocity ice pellet impact Requires workers to wear respiratory and eye protection equipment Requires workers to wear hearing protection

Table 4 Emerging Cleaner Technologies for Coating Removal Operational Aspects

Emerging Technology Type	Process Complexity/ Required Skill Level	Waste Products and Emissions	Capital Cost	Energy Use	Operations Needed After Stripping	References
Laser Heating	High/ Low for operation High for maintenance	Solid ash consisting primarily of pigment	High	Electricity supply to laser Ventilation to control particulate	Offgas collection of particulates during stripping Removal of ash residual	Head 1990 Hill 1993 Toohey 1993
Flashlamp Heating	High/ Low for operation High for maintenance	Solid ash consisting primarily of pigment	High	Electricity supply to flashlamp Ventilation to control particulate	Offgas collection of particulates during stripping Removal of ash residual	Larson 1990
Ice Crystal Blasting	Medium/Medium	Solid coating residue waste Airborne particulates	Medium	Compressed air to propel blasting media Refrigeration to prepare ice crystals	Remove masking Dispose of coating residue waste	Apple and Jahn Keith 1993 Larson 1990 Pauli 1993

Some additional inspection hand cleaning or other operations may be needed to prepare the surface after use of the cleaner technology for coating removal These are noted to indicate special considerations in the application of the cleaner coating removal technol ogy

Process Complexity, Required Skill Level, Waste Products and **Emissions**, and **Capital Cost** serve to qualitatively rank the cleaner technologies relative to each other The rankings are estimated based on the descriptions and data in the literature

The text further describes the operating information applications benefits and limitations as known for each emerging technology More highly developed technologies are discussed in Section 2 Available Technologies

The last column in Table 4 cites References to publica tions that will provide further information about each emerging technology These references are given in full at the end of the respective technology sections

Laser Heating

Removal of coatings using laser energy involves heating the coating with laser radiation to vaporize thin layers of material The coating is removed by sweeping the laser beam over the surface to be stripped The coating material absorbs energy from the laser The rapid heating action oxidizes organic in the coating to CO and H O Production of organic products of incomplete combust on has not been quantified

Metals and other nonvolatile portions of the coating form particulate ash A vacuum air removal system possibly supplemented by compressed air blowoff collects the ablated particulate to prevent redeposition or escape into the surrounding air space The offgas can be passed through filters to remove the particulate Laser heating has the potential to reduce the final disposal volume to less than the original volume of coating material due to combustion of the organic elements in the coating

Laser coating removal relies on heating the coating by absorption of light energy Coatings with low light absorbance typically light colored or glossy surfaces are less amenable to removal by laser systems Uncontrollable variations in the thickness of the coating being stripped make optimization of the laser coating removal difficult

A commercial vendor has both used a 10 W pulsed laser to develop data on laser cleaning of aircraft materials and developed higher powered modular systems for full scale applications The new modular systems have a laser beam generator and a manually operated beam delivery arm Pulse frequency varies directly with power in the higher powered systems

Pulsed laser stripping of coating requires offgas collection in filtration bags to remove the particulates which are primarily the coating pigments In tests these particulates either did not deposit on the filter housing or they plugged and shortened the life of the filters The coating particulates are collected on the filter for disposal or recycling (Head 1990)

Laser paint removal has been tested for removal of topcoat and primer from smooth aluminum smooth steel textured iron fiberglass and carbon fiber resin composite The testing indicated that laser pulse duration timing and energy density could be selected and controlled to remove coating without substrate damage (Hill 1993)

Laser systems can give rapid controlled coating removal but require complex hardware

A Laser Automated Decoating System (LADS) is being developed for the U S Air Force Ogden Air Logistics Center in cooperation with the Aeronautical Systems Center RAMTIP office The system will be designed to remove coating from F 16 radomes The planned system consists of the following subsystems (Toohey 1993)

- Beam Delivery Subsystem (including turning mirrors a beam director head and the beam enclosures)
- Material Handling Subsystem (including a holding fixture lathe head and lathe bed)
- Vision Imaging Subsystem
- Waste Collection Subsystem
- Control Subsystem
- Pulsed Laser Subsystem

Advantages must be weighed against limitations

Laser coating removal has several potential advan tages

- The waste is small (ash from noncombustible coating materials)
- Combination of robotic control with visual overcheck can remove coating in a well con trolled manner
- No substrate damage has been detected under a variety of conditions including coating removal from composite materials

Laser cleaned substrates show good coating adhesion and corrosion resistance
Laser stripping does not damage electronic components or change metallurgical properties (Head 1990)

Some of the limitations of laser coating removal systems include

The laser systems have a high capital cost and are best used with robotic controls
It is difficult to focus and control the laser beam to allow stripping of curved or complex surfaces
The use of high power lasers for coating removal requires the use of a Class 1 laser enclosure to ensure worker protection
Coating removal efficiency is affected by coating color and gloss
The potential for production of products of incomplete combustion has not been quantified

References

Head J D 1990 Pulsed Laser Cleaning In *Proceedings of the 1990 DOD/Industry Advanced Coatings Removal Conference* Atlanta Georgia pp 256 260

Hill A E 1993 Physical Requirements and Methodology Necessary to Achieve Controllable Damage Free Coatings Removal Using A High Energy Pulsed Laser In *Proceedings of the 1993 DOD/Industry Advanced Coatings Removal Conference* Phoenix Arizona pp 304 316

Toohey J A 1993 Laser Automated Decoating System (LADS) In *Proceedings of the 1993 DOD/Industry Advanced Coatings Removal Conference* Phoenix Arizona pp 278 303

Flashlamp Heating

Flashlamp coating removal is similar to laser coating removal but with the thermal energy input from a xenon flashlamp rather than from a laser A high intensity flash from the lamp is focused on the surface to heat and vaporize the coating A special lens must be used to focus the light for each different part of the configuration to be stripped

A review of the literature indicated that flashlamp heating has the following characteristics (Larson 1990) Dark low gloss coatings could be removed at a rate of 1 0 ft^2/min However as with laser coating removal systems light or glossy surfaces were difficult to strip Metal surfaces reflected the light and therefore were not damaged but composites absorbed light and were removed in layers analogous to coating

Flashlamp stripping leaves an oily layer on the stripped surface so final cleaning with CO_2 pellet blasting or a similar process is needed A system combining xenon flashlamp and CO_2 pellet blasting in a single pass is under development as discussed in the section on CO_2 pellet cryogenic blasting in Available Technologies (Section 2) Acutely toxic gases are released if polyurethane coatings are vaporized in an inadequate oxygen flow

Reference

Larson N 1990 Low Toxicity Paint Stripping of Aluminum and Composite Substrates *First Annual International Workshop on Solvent Substitution* DE AC07 76ID01570 U S Department of Energy and U S Air Force Phoenix Arizona pp 53 60

Ice Crystal Blasting

The Canadian Navy studied the use of ice crystals to remove coatings from the interiors of submarines (Larson 1990) Preliminary testing on aircraft indicate very low stripping rates (Pauli 1993) No active development programs were identified by this literature review The ice crystals are used as an air propelled blasting medium to remove coating Because the ice crystals melt and evaporate separation of the coating residue is simple and the waste volume is small Ice crystal coating removal is reported to be compatible with aluminum and composite substrates

Ice blasting uses ice crystals formed from tap water as the coating removal media Ice crystal production equipment forms crystals of controlled size and density to ensure reliable coating removal A typical hand held blasting system uses about 280 scfm supply air at 200 psig to propel the ice particles Ice crystal use rate is about 200 lb per hour

Ice crystal blasting has been employed commercially in the United States to clean metals (stainless steels aluminum lead) rubber concrete and plastic surfaces in the nuclear industry Oak Ridge National Laboratory and Martin Marietta have used ice blasting to decontaminate hand tools equipment lead bricks hot cell walls and other surfaces in different Oak Ridge facilities Similar applications have been reported at the Wolf Creek and Oconee nuclear reactor plants (Apple and Jahn Keith 1993)

141

References

Apple F C and L Jahn Keith 1993 Ice Blasting Flushes as it Scrubs *Nuclear Engineering International* August

Larson N 1990 Low Toxicity Paint Stripping of Aluminum and Composite Substrates *First Annual International Workshop on Solvent Substitution* DE AC07 76ID01570 U S Department of Energy and U S Air Force Phoenix Arizona pp 53 60

Pauli R 1993 Dry Media Paint Stripping — Eight Years Later In *Proceedings of the 1993 DOD Industry Advanced Coatings Removal Conference* Phoenix Arizona pp 220 248

SECTION 4
POLLUTION PREVENTION STRATEGY

Using solvent based methods for coating removal causes release to all three environmental media air land and water Both the solvent and the removed coating materials may cause environmental concerns The solvents used in conventional stripper formulations are hazardous and toxic The removed coating debris also may contain resins or pigments that can cause problems for the environment or worker safety Volatile organic vapors will enter the air due to the volatility of the stripper components Removing the stripper and softened coating generates sludge containing a mixture of solvents and coating solids including resins and inorganic pigments Often the stripped part is rinsed with water to remove remaining traces of stripper and coating The poststripping rinse generates wastewater containing solvents and coating solids

> *Consumers must increasingly restrict methylene chloride use, limit emissions, and reduce exposure of workers to methylene chloride Demand for methylene chloride declined 15% in 1991, reflecting health concerns and a weak economy*

These multimedia releases are monitored and controlled under a diversity of laws and regulations The main federal environmental regulations influencing selection of cleaner coating removal technology decisions are the Clean Air Act Amendments (CAAA) the Resource Conservation and Recovery Act (RCRA) the Right to Know provisions of the Superfund Amendment and Reauthorization Act (SARA) and the emphasis on eliminating pollution at the source in the Pollution Prevention Act Solvent strippers also increase the potential workplace exposures to VOCs regulated under OSHA There are a wide variety of state and local limits on VOC hazardous and aqueous wastes that also are of concern

Title III of the CAAA requires adoption of Maximum Achievable Control Technologies (MACT) for control of 189 HAPs Both paint stripper users and coating industries are considered major sources of HAPs and are subject to MACT standards The coating industries may use paint removal technologies either to remove unsatisfactory coatings or to clean paint line equipment MACT standards may be developed for coating removal specific to the needs and attributes of the specific industry

The requirements for cradle to grave management for solvent waste established by RCRA create several incentives to seek solvent-free alternatives Disposal of RCRA wastes is costly and carries continued liability RCRA also requires the waste generator to maintain a waste minimization program Converting all possible plant applications to a coating removal technology that eliminates or reduces solvent use helps to demonstrate an effort to minimize hazardous waste

Since 1988 manufacturing facilities have been reporting emissions of more than 300 chemicals or chemical categories The reporting requirements are established under Title III of SARA The toxic chemical release reporting is usually referred to as the Toxics Release Inventory (TRI) The reporting rule requires annual data on direct releases to all environmental media Facilities meeting the following conditions must file TRI data

> An SIC code in the range of 20 to 39
> 10 or more employees
> Manufacture or processing of more than 25 000 pounds or use of more than 10 000 pounds of a chemical on the TRI list

> *The Pollution Prevention Act of 1990 required expanded reporting of waste reduction activities*

The reporting requirements were expanded to include data on recycling as required by the Pollution Prevention Act The effort required to track and report chemical usage is significant For plants that meet the reporting threshold reducing chemical use below the threshold eliminates the requirement to prepare a report for the chemical Methylene chloride is one of the TRI chemicals so reducing or eliminating its use

143

will eliminate the need to complete one TRI reporting form

The TRI data also form the basis for tracking the voluntary reduction of 17 priority toxic chemicals identified in the 33/50 Program of voluntary pollutant reductions Methylene chloride is one of the priority toxic chemicals identified by the EPA Administrator in the 33/50 Program Switching from solvent stripping to a cleaner stripping technology will assist in meeting the reduction goal

The organic solvents in stripper formulations result in sufficient vapor concentrations to cause concern for workers in the area Some of the health and safety related data for methylene chloride are shown in Table 5 NIOSH recommends that occupational exposure to carcinogens be limited to the lowest feasible concentra tion

References

American Conference of Governmental Industrial Hygienists 1992 *1992 1993 Threshold Limit Values for Chemical Substances and Physical Agents and Biological Exposure Indices* ACGIH Cincinnati Ohio

National Institute for Occupational Safety and Health 1992 *NIOSH Pocket Guide to Chemical Hazards* U S Department of Health and Human Services NIOSH Washington D C

Table 5 Health Physical and Chemical Data for Methylene Chloride

Property	Value
CAS Number	75 09 2
OSHA PEL	500 ppm[a]
OSHA Ceiling	1000 ppm (2000 ppm with 5 minute maximum peak in any 2 hour period)
NIOSH REL	Reduce exposure to lowest feasible concentration
NIOSH IDLH	5000 ppm
NIOSH Occupational Carcinogen	Yes
ACGIH TLV	50 ppm
ACGIH Designation	A2 (suspected human carcinogen)
Molecular Formula	CH_2Cl_2
Molecular Weight	84 9 g/mol
Boiling Temperature	104°F
Freezing Temperature	139 F
Solubility in Water	2%
Specific Gravity (@ 68 F)	1 33 g/cc
Viscosity (@ 68 F)	0 44 cp
Vapor Pressure (@ 68 F)	350 mmHg
Flash Point	None (designated combustible liquid)
Flammability Limit in Air UEL	22%
Flammability Limit in Air LEL	14%
Kauri Butanol Value	132

Sources ACGIH 1992 NIOSH 1990
Note CAS = Chemical Abstract Services PEL = permissible exposure limit REL = Recommended Exposure Limit IDLH = immediately dangerous to life and health TLV = threshold limit value UEL = upper explosive limit LEL = lower explosive limit
(a) OSHA is expected to lower the PEL to 25 ppm or lower according to a proposed rule

144

APPENDIX 2

US EPA Waste Minimization in Metal Parts Cleaning, US EPA August 1989, Sections 2 through 5

Table Of Contents

2	Waste Minimization in Parts Cleaning Operations	6
	2 1 Overv ew of Parts Cleaning	6
	2 2 Waste Minimization Strategy for Parts Cleaning	8
	Can Cleaning Be Avoided?	8
	Select the Least Hazardous Medium	**9**
	Maximize Cleaning Efficiency	**11**
	Recycle and Reuse Waste	11
3	**Waste Minimization Approaches for Specific Classes of Cleaning Media**	**12**
	Solvents	12
	3 1 Eliminate Need for Solvents	12
	3 2 Substitution Alternatives for Solvents	13
	Use Less Toxic Solvents	13
	Aqueous Cleaners	14
	Emulsion Cleaners	15
	Mechanical/Thermal Methods	16
	3 3 Minimize Solvent Losses	17
	General Options	17
	Cold Cleaning	20
	Vapor Degreasing	23
	3 4 Solvent Segregation and Recycle/Reuse	26
	Keep Solvents Segregated	26
	Recycling	**27**

146

2. Waste Minimization in Parts Cleaning Operations

2 1 Overview of Parts Cleaning

SOLVENTS

AQUEOUS

ABRASIVES

Parts cleaning is an integral process operation for industries that repair maintain, or manufacture parts and equipment Examples of such industries are automobile repair equipment repair, and transportation maintenance industries (trucks, trains ships, and aircraft) Manufacturing groups include furniture manufacturers, metal fabricators, machinery manufacturers elec tric and electronic equipment manufacturers, and instrument manufacturers among many others

While the science of parts cleaning is very complex, the aim of cleaning is relatively simple — to avoid the generation of rejects during subsequent use or processing steps by removing contamination (i e soil) from the surface of the parts being cleaned Removal of soils can be achieved by way of detergency solvency, chemical reaction, or mechanical action Each of these actions, or a combination of actions, can be employed in a cleaning operation

Organic solvents, the most widely used class of cleaners, are used primarily for removing organic or oil-based contaminants The types of solvents commonly used for commercial cleaning applications are shown in Table 2 along with other cleaning media, listed by their cleaning action Table 3 provides a summary of cleaning methods or means of applying a particular cleaning medium

Aqueous cleaners can contain acids alkalies or chelating agents Acid cleaners such as sulfuric, nitric, and hydrochloric acids are used to remove oxidation scale and rust from metal surfaces Alkaline cleaners are solutions of inorganic salts often used in heated soak tanks to remove heavy oily soils and some solid soils Caustic solution is often employed as a paint stripping agent For both acid and alkaline aqueous cleaners rinse water plays an important part in the cleaning operation

Abrasives are designed to remove rust, oxides and burrs to create a smooth surface Common abrasives are sand aluminum oxide or silicon carbide mixed with an oil- or water-based binder

Detailed review and discussion of parts cleaning can be found in several references in the bibliography including Spring 1963 and 1974 Durney 1984 and the American Society for Metals *Metals Handbook* 1988

Table 2. Cleaning Media, Listed by Action

Detergency

(1) Alkaline salts and caustics
(2) Surfactants (soaps and synthetic soaps)
(3) Alkaline cleaners (1 and 2 combined)
(4) Emulsion cleaners (solvents and surfactants)

Solvency

(1) Aliphatic hydrocarbons naphtha, kerosene, diesel fuel
(2) Aromatic hydrocarbons benzene toluene, xylene
(3) Non-flammable solvents (halogenated hydrocarbons TCA TCE, PCE methylene chloride chlorofluorocarbons)
(4) Polar solvents (ketones, alcohols, esters, ethers, terpenes, amines)
(5) Emulsifiable solvents (flushed away with water)
(6) Diphase cleaners (solvent and aqueous layered media)

Chemical Reaction

(1) Acidic baths (pickling) yield soluble salts by reaction with oxides, sulfides etc
  (a) Mineral acids sulfuric hydrochloric, phosphoric acids
  (b) Passivating acids nitric, chromic
  (c) Organic acids
  (d) Specialty acids containing surfactants for wetting-out action or a foam blanket or pickling inhibitors to prevent excessive attack on the metal
(2) Alkaline baths
  (a) Alkaline de-rusters containing organic sequestrants which solubilize metal oxides and also remove soils
  (b) Molten alkali with or without hydride (reductant) or nitrate (oxidant) or electric current also removes soils
(3) Chelating agents react with soils to form soluble complexes
(4) Electropolishing (reverse current cleaning), electrodissolution of metal substrate at the anode
(5) Oxidizing or reducing agents to chemically render the soil soluble

Mechanical Action

(1) Turbulence/agitation
(2) Abrasives
(3) Deformation
(4) Ultrasonic cleaning
(5) Heat
(6) Electrocleaning (direct current hydrogen scrubbing at the cathode)

Source Adapted from Spring, 1963

Upon identifying the type and origin of the contamination it is worthwhile to examine whether cleaning can be avoided or its extent reduced For example protective coatings of grease or paint (which require solvents for removal) can be replaced with peel coatings or shrink-wrapping of items with polymeric sheeting Moisture which can lead to rust can often be reduced or eliminated by allowing the parts to dry more thoroughly between operations or by storing them indoors to avoid condensation and/or rain

Also of importance is the location of cleaning operations in manufacturing sequence Articles to be cleaned prior to finishing should only be cleaned at the point in time when they are ready for coating Parts should not be cleaned and conversion-coated and then warehoused or staged for subsequent batch coating During storage, the parts can become contaminated by air-borne oils or by handling These contaminants will interfere with ultimate finish quality and increase the rate of rejects

Examination and subsequent control of contamination sources may lead to reduction or elimination of cleaning requirements as illustrated above However, it is also important to note that an unwarranted relaxation of cleaning requirements may have an opposite effect of increasing waste generation associated with rework of the rejects, e g due to poor coating quality Any proposed changes to the cleaning process require careful evaluation of potential waste generation in downstream operations

Select the least hazardous medium

The choice of cleaning medium for a given parts cleaning operation is determined by a number of factors

- physical and chemical properties of contaminants substrate surface and cleaning media
- the amount of contaminant to be removed
- the required degree of cleanliness and product quality
- size shape and complexity of part to be cleaned
- volume or number of parts to be cleaned per unit time
- costs of raw materials, equipment and labor
- worker protection
- environmental protection

Shrink-wrapping
Oil is often used to coat metal parts before shipment in order to prevent rust which forms on exposure to air and moisture Similar protection can be achieved by a removable plastic coating such as polyethylene shrink-wrapping At the receiving facility the use of vapor degreasing to remove the oil is no longer necessary

Removal of oil contaminants prior to welding
The welding of metal parts which have residual oils present on or near the weld leads to the formation of carbonaceous deposits due to pyrolysis of organics at high temperatures Such deposits are extremely difficult to remove Cleaning the parts prior to welding greatly reduces the subsequent cleaning requirements

The relative importance of these factors can change considerably over time For example both benzene and carbon tetrachloride (former standards in industry) have been found to be carcinogenic and were regulated out of use as metal cleaners because of heightened concern over worker exposure This same concern and increased disposal costs, have caused some major automotive manufacturers to phase out solvent cleaners in favor of aqueous cleaners

In looking for a new cleaning medium or procedure a company should consider the least toxic or most environmentally acceptable medium then if this is not satisfactory, progress to more toxic or less environmentally desirable alternatives This pattern dictates that cleaning media be evaluated in the following order

- water or air
- abrasive media with water or air as carrier
- aqueous detergent solutions
- alkaline solutions
- acids
- solvents

Ideally, the cleaning method of choice would involve the shortest cleaning sequences, employing the least toxic cleaning medium generating the least amount of wastes and still providing the necessary minimum level of cleaning to the part at minimum cost For facilities attempting to change from one cleaning medium to another, the impact on subsequent operations must be considered Any proposed changes to the cleaning process requires careful evaluation of potential effects of the cleaner on the substrate that might affect the integrity of downstream processes (anodizing plating painting, etc) The impact of cleaner drag-out on the lifespan of downstream process solutions should also be addressed

Maximize cleaning efficiency

If a cleaning step cannot be eliminated and the least hazardous cleaning material that is effective is already being employed, then it should be used as efficiently as possible From a waste reduction point of view, this means using the least amount of cleaning medium to achieve an acceptable level of cleanliness Examples of ways to improve cleaning efficiency are cited in later sections of this booklet for solvent cleaners aqueous-based cleaners and abrasives, respectively

Recycle and reuse waste

The cleaning waste that cannot be eliminated through substitution or more efficient use should be considered for recycling or reuse The segregation of different types of cleaning waste may be required for such recycling or reuse Specific examples of recycling and reuse are discussed for specific cleaning media in later sections of this pamphlet

3 2 Substitution Alternatives for Solvents

SOLVENTS

Many firms have been successful in substituting less toxic cleaning media for solvents The alternatives include

- substitution of toxic solvents with less toxic solvents
- substitution of solvents with aqueous cleaners
- substitution of solvents with emulsion cleaners
- substitution of solvents with mechanical and/or thermal methods

Discussion of each substitution approach is provided below Most emphasis is given to aqueous cleaners, since this is the major and often most effective alternative

In the case of halogenated solvents media substitution will often require a switch from vapor degreasing to cold tank cleaning with possible addition of mechanical or ultrasonic agitation A preliminary analysis of possible substitutes for chlorinated solvents is available (US EPA 1983)

Use less toxic solvents

Substituting one solvent for another in cleaning applications has an extensive history Trichloroethylene (TCE) is being replaced by 1 1 1-trichloroethane (TCA) Benzene and other toxic aromatic solvents were replaced by less toxic aliphatic solvents such as Stoddard solvent and naphthas Possible solvent alternatives to halogenated compounds include

- aliphatic hydrocarbons (e g naphthas)
- terpenes
- N-methyl-2-pyrrolidone
- dibasic acid esters

Although photochemically reactive terpenes (derived from citrus plants and pine trees) are generally recognized as safe substances (Hayes 1988) However carcinogenicity of terpenes and other cycloalkenes has not been well explored The terpene cleaners are available commercially in neat form or as water solutions with surfactants, emulsifiers, rust inhibitors and other additives Terpenes tested very favorably as substitutes for halogenated solvents for removal of heavy greases, oily deposits, and carbonized oils Terpenes are being actively tested as alternatives to chlorofluorocarbons in electronic parts cleaning

Reported disadvantages of terpenes include inability to separate long chain aliphatic oils for recycle of the cleaning solution both in neat form and in aqueous emulsions Ultrafiltration to remove oil is not viable for recycle and is only useful for treating dilute emulsions prior to wastewater treatment Recovery by distillation is impractical since terpenes boil around 340°F, which means that many light oils would be carried over with the solvent Energy cost for distillation recovery, even with vacuum assist, would be high Difficulties in rinsing residues from parts surfaces have been cited Also terpenes cost three to five times more than traditional chlorinated and hydrocarbon solvents (Evanoff, 1988)

It is important to evaluate the wastewater quality issues and recyclability aspects when selecting an aqueous cleaner Generally selection of non emulsifying cleaners which promote oil separation will enhance recyclability Process equipment involves a heated tank equipped with oil skimmer and mechanical agitation spraying or ultrasonic devices The cleaning step is usually followed by water rinsing and air drying

SOLVENTS

Quite often, solvent is employed for cleaning because an attempt to utilize an aqueous cleaner was unsuccessful Before committing to solvent, one should investigate the compounds requiring removal High melting temperature compounds are often used in forming compounds lubricants and preservatives, making removal with aqueous cleaners difficult Suppliers of metal processing chemicals can recommend substitutes that can be cleaned with aqueous cleaners thus eliminating solvent and emulsion cleaners General studies are available (Briggs 1976, Wagner, 1984 USEPA 1983 Evanoff 1988), however, each application is highly specific and generalizations are difficult Testing of a number of potential substitutes is recommended (see Table 5) The reader is advised to contact aqueous cleaner manufacturers for specific recommendations A comprehensive list of manufacturers and trade names can be found in recent issues of **Metal Finishing's** "Guidebook & Directory or other standard buying guides

Emulsion cleaners

Emulsion cleaners combine solvent cleaning with aqueous cleaning so that water-immiscible solvent is dispersed in the aqueous phase with the aid of emulsifiers, surfactants and coupling agents The large surface area of the dispersed solvent phase often allows the attainment of results achievable with direct solvent cleaner Solvent vapor pressure and evaporation losses are suppressed

Emulsion cleaners are used for immersion or spray cleaning in cold baths predominantly in metal fabrication facilities Disadvantages include residual oil film on the parts (which necessitates an additional cleaning step in applications where a high degree of cleanliness is required), relatively low saturation capacity, and difficulties in recycling by separation of oil and reconstituting the cleaner Emulsion cleaning is no longer a widespread technology and is being quickly replaced by aqueous cleaners For more information on emulsion cleaners the reader is referred to USEPA 1983

Replace solvent with alkaline cleaning media

The Torrington Company in Walhalla, S C, was using vapor degreasers containing 1,1 1-TCE to clean metal bearings for the automotive industry Because of concern about worker health and increasing solvent prices, the company installed an alkaline degreaser that employed a two-stage washer and hot air drier The waste water from this system can be discharged directly to the sewer system because the alkaline cleaner is considered non-hazardous (Kohl 1984)

Reduction of solvent use

A company that reduced TCE use is the Hamilton Beach Division of Scovill Inc in Clinton, N C, which manufactures small electric appliances Scovill found that a water-soluble synthetic cleaner manufactured by Cincinnati Milacron Co could be used in place of the TCE organic solvent degreaser for some applications, reducing TCE use overall by 30 percent This saved $12 000 per year (Huising, et al 1985)

SOLVENTS

To replace the use of chlorinated solvents in paint stripping operations heat or flame cleaning ovens are becoming more common Heat cleaning ovens burn off paint and other organic compounds from metal parts Specifically these techniques have been successful in cleaning paint hangers and hooks A disadvantage of heat cleaning ovens is the production of combustion emissions

3 3 Minimize Solvent Losses

Once it has been determined that the use of solvent cannot be avoided, all efforts to reduce solvent use in a facility should be made The following options are grouped according to their application (general, cold cleaning and vapor degreasing)

General options Waste minimization options that apply to solvent use in general are discussed below These options include standardizing solvent use, consolidating solvent cleaning operations maintaining solvent quality increasing cleaning efficiency, and reducing solvent evaporation

Standardize solvent use

Standardization means using the least number of different solvents in the facility A reduced inventory helps track solvent consumption, reduces the risk of cross contamination, and eases waste handling In addition to simplifying cleaning operations, standardization also helps promote the potential for downgrading or recycling waste solvents Using fresh solvent for the most critical cleaning applications and reusing solvent sequentially for less demanding cleaning operations can reduce overall solvent consumption and waste production

Consolidate cleaning operations into one centralized degreasing operation

Centralization helps in the effort to standardize solvent use It also eases the effort it would take to supply many solvent users dispersed throughout a facility A centrally-located solvent issue and waste collection station was found to be useful in solvent control and in proper waste handling in the multi user facility (SFE Technologies, 1985)

Maintain solvent quality

By maintaining solvent quality, the need for solvent replacement and disposal is reduced Ways to achieve this goal include contamination avoidance equipment maintenance solvent monitoring proper solvent addition and prompt sludge removal These approaches are discussed below

Staged solvent use and standardization of solvent
A Massachusetts electronics firm switched from using three different solvents — mineral spirits for degreasing machine parts perchloroethylene for computer housings and a fluorocarbon-methanol blend for printed circuit boards — to a single solvent mixture The mixture of 1,1,1-trichloroethane and alcohol is used for all three applications in a staged system Fresh solvent is used for the printed circuit boards then is reused to degrease the computer housings and last the machine parts Besides reducing solvent consumption and waste, this practice has eliminated potential cross contamination of solvents, generated a single waste stream that can be recycled simplified safety and operating procedures and increased purchasing leverage (Traverse 1984)

SOLVENTS

After establishing a proper monitoring program, work should be undertaken to correct identified problems Chlorinated solvents contain stabilizers to prevent acid forming reactions with water, metal heat and oil When an acid acceptance test indicates that the solvent is near the point of going acid the solvent is either disposed of or fresh solvent is added in an attempt to boost stabilizer levels Addition of fresh solvent is a poor solution since it results in the degradation of the fresh solvent A better solution is to analyze the solvent and add only the specific components required (see example below) Since each type of solvent may employ a different mix of stabilizers, the solvent manufacturer should be contacted before any additions are made

Careful solvent addition
Care should be taken whenever solvent is added to the tank to ensure that proper solvent is being added For example as little as 0 1% TCA mistakenly added to a tank of TCE can cause an acid condition requiring disposal of the entire contents

Sludge removal
Metal fines can catalyze reactions that lead to decomposition of the solvent Paint chips can absorb solvent and swell, forming a viscous sludge Routine maintenance should be performed to remove sludge Continuous filtering is often helpful

Increased cleaning efficiency

As the level of contamination increases the rate of solvency slows down While cold cleaning operations can be successfully performed at up to 10% contamination, solvent baths are often replaced due to slow cleaning action when the contamination level reaches 2 to 3% A simple way to increase cleaning efficiency is to employ manual brushing Manual brushing is extremely effective at removing caked-on soils and is a very common precleaning technique Disadvantages include exposure of workers to solvents high labor costs, and the need for high ventilation rates to protect workers High ventilation rates can in turn lead to excessive solvent evaporation

Maintaining solvent quality
The Ogden Air Logistic Center generates about 6500 gallons of waste 1,1,1 trichloroethane (TCA) from 21 vapor degreasing operations In an effort to reduce this waste the chemical laboratory personnel determined that the TCA was being disposed of because it did not meet an acid acceptance value of 0 10 weight percent NaOH Oil contamination levels were less than 10 percent at the time of disposal far less than the expected 30 percent level To restore acid acceptance levels 1,2 butylene oxide was added to the solvent No adverse reactions or detectable problems were observed when the butylene oxide was added to the vapor degreasers Ogden Air Logistics Center expects to reduce disposal volumes by 4000 gallons (60 percent) and save $30 000 per year (Christensen 1988)

Some waste minimization options specific to cold cleaning soak tank operations include reducing the degree of drag-out and using a counter-current cleaning arrangement In addition to these methods the reader should review all of the general options discussed in the preceding section

SOLVENTS

Reduce drag-out

Drag-out is the term applied to the liquid that comes along on the part as it is removed from the tank Excessive drag-out can result in increased solvent replenishment costs increased air emissions and upset of downstream processes Methods for reducing drag-out include proper racking increased drainage and installation of drain boards

Proper racking
Careful attention should be given to the design of work baskets and to methods of racking so as to ensure that a minimum amount of solvent will be trapped either in the work or in the baskets (Figure 3)

Figure 3 Racking For Maximum Drainage

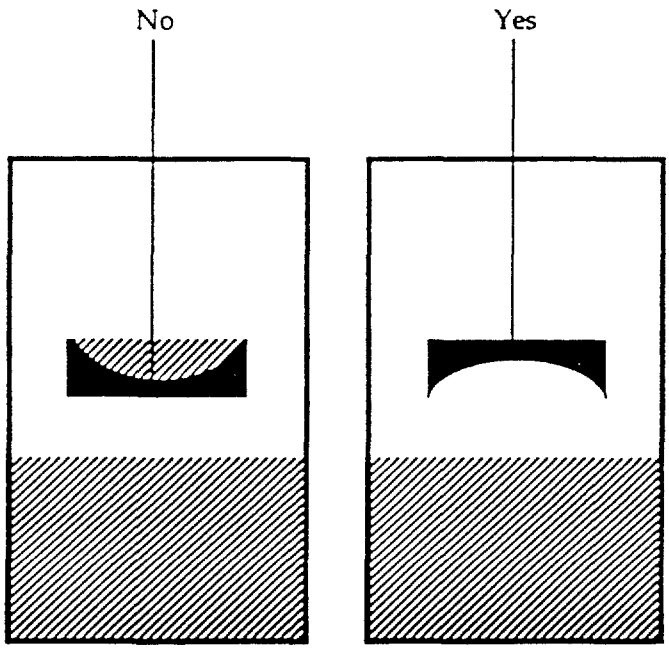

SOLVENTS

Vapor degreasing

In industries that perform a large amount of cleaning vapor degreasing systems are common Available sizes for open-top units range from 1 x 2 feet up to 6 x 100 feet The typical unit size is approximately 3 x 6 feet Open-top units are commonly employed in the electroplating and electronics industries where easily handled parts are cleaned Conveyorized (or fully automated) units are more common in the aerospace and large appliance product coating industries

Vapor degreasing systems usually consist of a tank of halogenated solvent that is heated to the solvent s boiling point Parts to be cleaned are placed in a basket or on a rack and lowered into the vapor zone As the solvent condenses the contamination is dissolved and the parts are rinsed and cleaned To increase cleaning efficiency the parts may be immersed into the solvent bath or a solvent spray unit may be employed When the temperature of the parts finally reaches the temperature of the solvent vapor, condensation of the vapor onto the part ceases The parts can then be removed from the unit clean and dry

Solvent use in vapor degreasing can be minimized by many of the general options discussed previously and by the options listed below

Limit entrance/exit speeds

Solution and vapors are removed from the tank when a part is inserted or withdrawn too quickly Avoid speeds greater than 11 feet per minute to limit excessive dragout

Limit workload size

The use of baskets having an area of less than 50% of the degreaser opening will limit vapor dragout due to piston effect (Figure 5)

Avoid work shock

Work shock occurs when a heavy load is introduced into the degreaser resulting in collapse of the vapor blanket and infiltration of air into the cleaning unit (Figure 6) The solvent-saturated air will be expelled from the unit when the vapor layer is reestablished

Maintain temperature of solvent

The temperature of the solvent in the degreaser should be maintained at a level adequate for vapor production to ensure that the degreaser functions efficiently

Allow sufficient time in the degreaser

Ensure that parts have reached the temperature of the vapor so that condensation has ceased

Figure 6 Work Shock

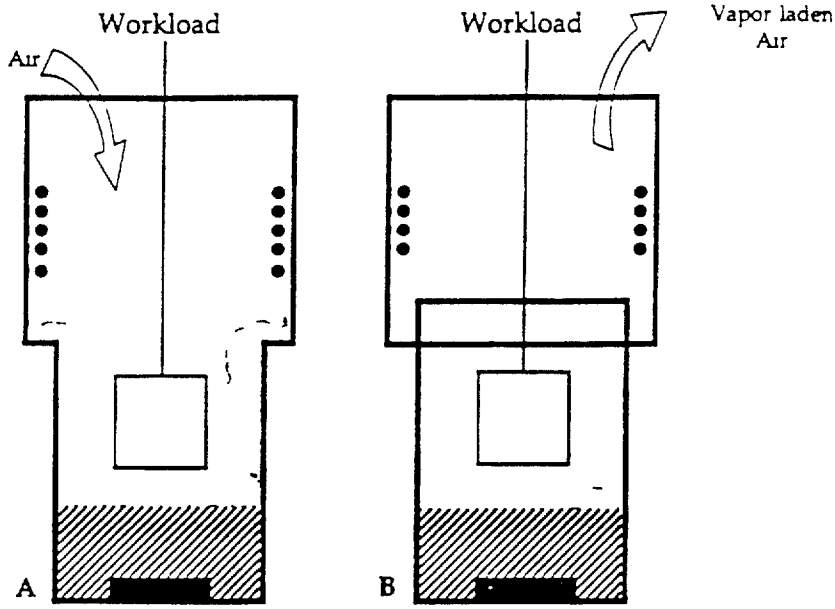

A 1 Work introduced
2 Rapid condensation on work
3 Vapor blanket collapses
4 Air pulled in

B 5 Condensation on work stops
6 Vapor blanket re-established
7 Vapor-laden air expelled

SOLVENTS

- Extend freeboard Increasing the freeboard/width ratio of a vapor degreaser can reduce solvent air emissions (see Figure 7)
- Use cold traps above freeboard chillers
- Locate the degreaser away from drafts or use baffles to prevent upset of the vapors Proper location can reduce solvent loss by 30 percent

For additional information on ways to reduce emissions associated with vapor degreasing the reader should contact the solvent supplier Most if not all of the major chlorinated solvent manufacturers have information available on the proper way to utilize maintain, and eventually dispose of their products

SOLVENTS

Keep waste solvents as free from water, solids, and garbage as possible

Label the container clearly, keep the container closed and if possible sheltered from rain Drums should be covered to prevent contamination with water

Label the chemical content on each waste container

Record the exact composition and method by which the solvent waste was generated

Recycling Where recycling of solvent waste is viable the choice between on-site versus off-site recycling must be made Major factors that may influence a decision are shown in Table 6

Table 6 Factors Influencing the Decision to Recycle Solvent Wastes on Site

Advantages	Disadvantages
Less waste leaving the facility	Capital outlay for recycling equipment
Owner's control of reclaimed solvent s purity	Liabilities for worker health, fires explosions leaks spills, and other risks as a result of improper equipment operation
Reduced liability and cost of transporting waste offsite	Possible need for operator training
Reduced reporting (manifesting)	Additional operating and maintenance costs
Possible lower unit cost of reclaimed solvent	Reported Difficulties
Perceived Benefits	Loss of solvent during distillation process
Favorable economics for recovery (e g reduced solvent requirements)	Low solvent recovery efficiency
Reduction in disposal costs	Installation problems
Reduction in reporting (manifesting)	Maintenance problems
Lower liability	

Source California DHS, 1986

(For a survey of small still manufacturers and other technical information the reader is referred to "Guide to Solvent Waste Reduction Alternatives available from the State of California Department of Health Services *(Calif DHS 1986)*

SOLVENTS

Fractional distillation
Fractional distillation is carried out in a refluxed column equipped with either trays or packing Heat is supplied by a reboiler located at the bottom of the column while heat is removed at the top of the column by a condenser Fractional distillation allows for separation of multi-component mixtures or mixtures of solvent and oils with very similar boiling points

Evaporation
Evaporation can be employed for solvent recovery from viscous liquids sludges, or still bottoms resulting from distillation Scraped or wiped film evaporators utilize revolving blades which spread the liquid against a heated metal surface The vapors are recovered by means of a condenser Another type of system, a drum dryer, employs two heated counter-rotating drums through which the liquid feed must pass While both systems can handle viscous wastes, the drum dryer is more tolerant of polymerizable contaminants

Off-Site Recycling

If recycling of waste solvent on site is impractical several off-site recycling schemes are available One should consider or investigate all of the items listed in Table 7 when selecting an off-site recycling scheme Some viable off-site

---

Recycling solvents efficiently
Segregating solvent wastes is usually an essential step prior to recycling IBM Corporation reported that segregation may also increase recycling efficiency segregating non-chlorinated from chlorinated solvents resulted in 15 to 20 percent greater yields *(Waste Reduction The Untold Story 1985)*

Mobile solvent degreasing units
Automobile repair shops in California can lease fully-contained degreasing systems from Safety Kleen Inc Safety Kleen provides a batch-tolling service for degreasing solvents it leases its mobile units including solvents as one system Safety Kleen periodically replaces the spent solvent with fresh solvent and recycles the spent solvent at a separate facility

Waste exchanges
Waste exchanges generally exchange some 20 to 30 percent of the wastes they list (Banning 1983 1984) At present the most common wastes listed are solvents and metal wastes Other wastes listed include acids, alkalis other inorganic chemicals organics and solvents and metals and metal sludges

AQUEOUS

Aqueous cleaning comprises a wide range of water-based cleaning methods that use water, detergents, acids, and alkaline compounds to displace soil rather than dissolving it in organic solvent Aqueous cleaning has been found to be a viable substitute for many parts cleaning operations currently using solvents Its principal disadvantage is that the parts are wet after cleaning and ferrous parts easily rust in this environment (However the use of warm (140-150°F) air for drying is less costly than the cost associated with solvent usage and disposal and there are additives available to prevent short term rusting) Also, aqueous cleaning may not be suitable for electronic components since it may leave conductive residue

Waste minimization techniques for reducing wastes from aqueous cleaning include substitution alternatives use of less hazardous compounds and maintaining solution quality

3 5 Substitution Alternatives for Aqueous Cleaners

Abrasives, water, or steam are less hazardous than acid or alkaline cleaners and may be equally or more effective An example in which an abrasive cleaning system was successfully substituted for an alkaline cleaner is provided below

3 6 Use of Less Hazardous Acid or Alkaline Compounds

The aluminum processing industry widely uses deoxidizers and desmutters based on chromic acid which is highly toxic and a possible carcinogen By substituting a nonchromated deoxidizer, use of a hazardous product can be eliminated The latter products are based on ferric sulfate which is easily treated for disposal (Weast 1988)

3 7 Maintain Solution Quality

As was discussed under general waste minimization options for solvent use maintaining solution quality reduces the need for replacement and disposal Ways to achieve this goal include precleaning inspection avoiding unnecessary loading, providing continuous heating proper solution make up removing sludge promptly and monitoring cleaning solution strength

Precleaning inspection All parts entering the tanks should be free of solvents and other cleaners For parts that are first mechanically cleaned water-based abrasives and cutting oils should be used to reduce the cleaning load Precleaning of the parts in a hot water bath is often effective in reducing the load on the cleaner This initial precleaning stage can often be made up from the last rinse stage of the cleaning operation and should employ demineralized water

Substituting an abrasive cleaning system for an alkaline bath
A manufacturer of fabricated metal products cleaned nickel and titanium wire in an alkaline chemical bath prior to using the wire in its product In 1986 the company began to experiment with a mechanical abrasive system The system worked, but required passing the wire through the unit twice for complete cleaning In 1987 the company bought a second abrasive unit and installed it in series with the first unit This system allowed the company to completely eliminate the chemical cleaning bath (USEPA, 1988B)

AQUEOUS

Good mixing is achieved by adding a mixing system to the tank By installing a three way valve on the main header of the pump exit solution can be re-diverted to the chemical entry area instead of through the spray nozzles This provides for easier dissolution of chemicals through a greater number of turnovers (less pressure drop means higher pumping rates) and elimination of potential plugging of the nozzles when dissolving solids

Remove sludge and soils promptly

Removing sludge and soils from aqueous cleaning soak tanks will reduce chemical use by increasing the permissible time interval between dumping and total cleanout of the tank

Alkaline cleaners are available which allow the separation of excess oily soil from the cleaner These formulations involve the use of surfactants that are good detergents but poor emulsifiers Agitation of the bath during the work shift causes a temporary emulsification which keeps the soil in suspension After a prolonged period of inactivity (usually overnight), the oily soils float to the surface where they are skimmed off This method is quite effective with mineral oil-type soils but is less so with fatty oils

Monitor cleaning solution strength

Analytical checks of solution strengths should be made on a routine basis The correction of solution strength by making small and frequent additions is much more effective than making a few large additions Analytical checks can be performed by the operator utilizing simple titration techniques (does the addition of a given amount of reagent to a known volume of cleaner and indicator result in a color change?) Full scale titration tests may be performed by the lab on a less frequent basis An accurate log of all tests and cleaner additions should be kept at all times Occasional testing of the reagents should also be performed

Equipment maintenance

As discussed under solvent cleaning rack systems should be maintained in good condition free from cracks rust and corrosion Metal tanks should be properly coated with protective finishes both inside and out Plastic linings should be used in deionized water rinse tanks since these tanks tend to rust rapidly Use of plastic tanks can eliminate this problem Spray nozzles should be inspected regularly to avoid clogging

---

Reducing chemical use and waste in a bath cleaning system

Liquid-Life makes a 100-gallon per minute separator unit that operates in conjunction with a cleaning bath (solvent alkaline or acid) The separator unit continuously removes sludge and particulate matter from the bath A pump, hydrocyclone and sludge retention tank make up the unit Waterloo Industries Inc , of Waterloo Iowa installed the Liquid-Life unit for its alkaline cleaning system used to clean the steel cabinets it manufactures prior to phosphate-coating the cabinets The Liquid-Life unit has enabled Waterloo to reduce its chemical costs by 20 percent clean out its alkaline bath system every 13 weeks instead of every four weeks, and do less maintenance on the cleaning operation since the pump is the only moving part in the system (Anonymous March 1982)

AQUEOUS

Table 8 Drag-Out for Various Rack Configurations

Item	Drag-out, gal/100 ft2
Vertical parts well drained	0 4
Vertical parts, poorly drained	2 0
Vertical parts, very poorly drained	4 0
Horizontal parts, well drained	0 8
Horizontal parts, very poorly drained	10 0
Cup-shaped parts, very poorly drained	8 0 to > 24 0

Source Durney 1984

Table 9 Flow Rates for Five Rinsing Systems

System	Flow (gpm)
Single rinse	10 0
Two rinses in series equal flow of fresh rinse water to each tank	0 6
Three rinses in series, equal flow of fresh rinse water to each tank	0 3
Two counterflow rinses, fresh water feed to second tank only	0 3
Three counterflow rinses, fresh water feed to third tank only	0 1

Source Durney, 1984

Figure 8 Acid Pickle Closed-Loop System

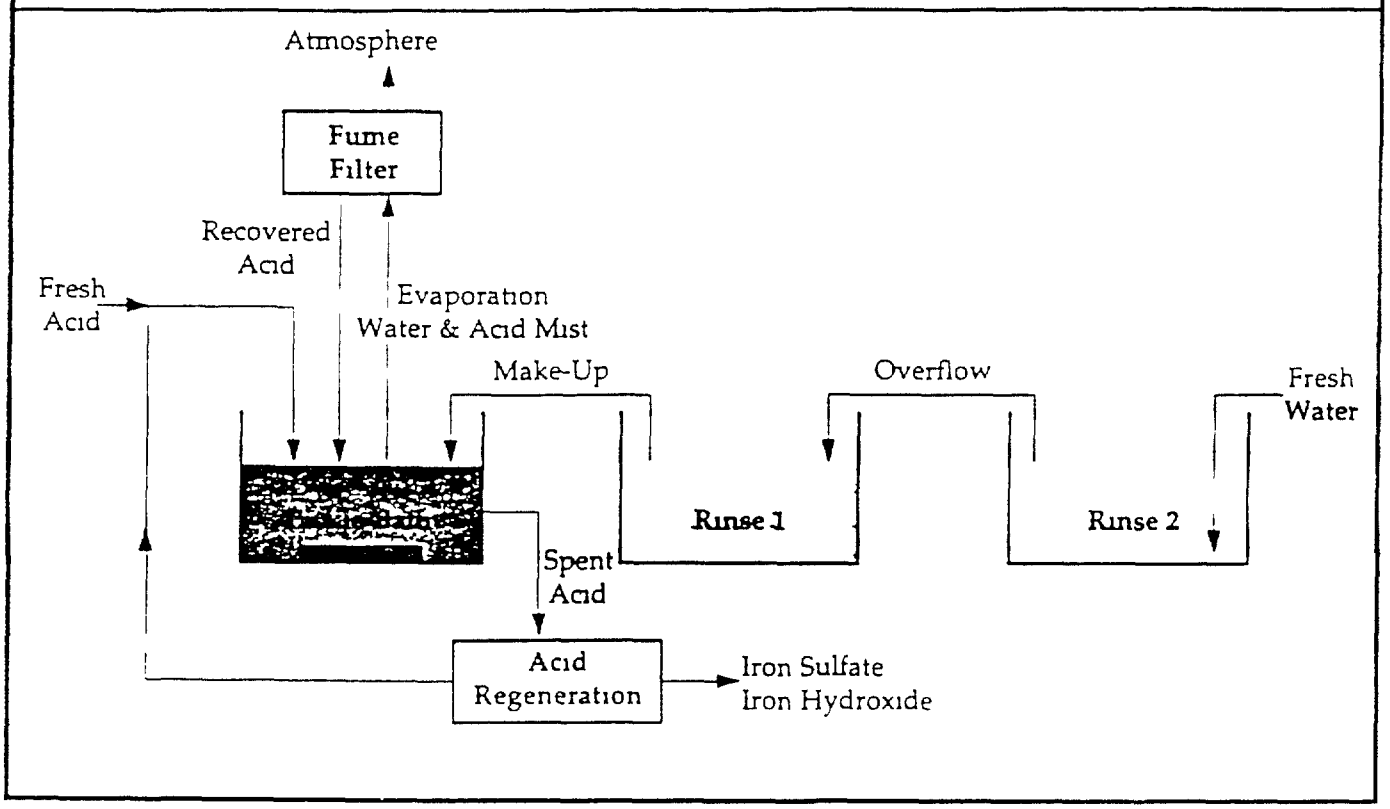

4. Implementation

After promising waste minimization measures for a parts cleaning operation have been identified, they should be evaluated for technical and economic feasibility and if found satisfactory they should be implemented For those methods that are found to be economically infeasible additional analysis including consideration of "hidden ' cost liability, public image and other components (USEPA, 1988C) should be performed before dropping an option

Adopting specific waste minimization measures may not be easy or straight forward A number of factors (Table 10) may affect the readiness of an organization to implement measures that require changes in procedures equipment or employee responsibilities Developing a strategy to overcome these barriers should be an integral part of waste minimization planning This strategy should include establishment of a working group of personnel representing the affected departments Health and Safety Production, Maintenance Process Control, Purchasing, and Facilities, for example (USEPA 1988B)

5. Conclusions

As increased regulation raises the cost of waste treatment and disposal efforts to decrease waste volumes and toxicity become more economically justifiable Implementing waste minimization techniques to reduce cleaning waste can produce treatment and disposal cost savings which more than offset the expenditure In addition, material costs, regulatory compliance, and other costs can be cut since the life of the cleaning solutions will be lengthened

Most of the measures discussed in this pamphlet would involve minimal capital outlays For example, proper equipment operation requires only that management thoroughly train the employees using the equipment and that the equipment be correctly maintained These low-cost measures generally have a fast payback and are among the first a firm should implement Making employees aware of the cost of waste generation due to cleaning operations and involving them in identifying solutions may encourage the design of more efficient production processes

With the adoption of efficient production processes and the waste-minimizing measures presented here, companies with parts cleaning operations should be able to reduce their waste disposal costs and liabilities and reduce their contribution to the environmental problems associated with waste disposal

APPENDIX 3

US EPA Guide to Cleaner Technologies - Alternatives to Chlorinated Solvents for Cleaning and Degreasing
February 1994, Sections 2 and 3

CONTENTS

Section 2 Available Technologies	6
How to Use the Summary Tables	6
Aqueous Cleaners	11
Semi Aqueous Cleaners	15
Petroleum Hydrocarbons	18
Hydrochlorofluorocarbons (HCFCs)	19
Miscellaneous Organic Solvents	22
Supercritical Fluids	25
Carbon Dioxide Snow	28
Section 3 Emerging Technologies	31
How to Use the Summary Tables	31
Catalytic Wet Oxidation Cleaning	33
Absorbent Media Cleaning	33

SECTION 2
AVAILABLE TECHNOLOGIES

How to Use the Summary Tables

Seven available alternatives to chlorinated solvents for cleaning and degreasing are evaluated in this section

- Aqueous cleaners
- Semi aqueous cleaners
- Petroleum hydrocarbons
- Hydrochlorofluorocarbons (HCFCs)
- Miscellaneous organic solvents
- Supercritical fluids
- Carbon dioxide snow

Tables 2 and 3 summarize descriptive and operational aspects of these technologies They contain evaluations or annotations describing each available cleaner technology and give users a compact indication of the range of technologies covered to allow preliminary identification of those technologies that may be applicable to specific situations

Descriptive Aspects

Table 2 describes each available cleaner technology It lists the **Pollution Prevention Benefits, Reported Application, Benefits,** and **Limitations** of each technology

Operational Aspects

Table 3 shows the key qualitative operating characteristics for the available materials and technologies The rankings are estimated from descriptions and data in the technical literature and are based on comparisons to the materials that these alternatives would replace

Process Complexity is qualitatively ranked as 'high 'medium or 'low based on such factors as the number of process steps involved and the number of material transfers needed Process complexity is an indication of how easily the new technology can be integrated into existing plant operations A large number of process steps or input chemicals or multiple operations with complex sequencing are examples of characteristics that would lead to a high complexity rating

The summary tables will help identify possible candidate cleaner technologies

The **Required Skill Level** of equipment operators also is ranked as "high, "medium," or "low Required skill level is an indication of the level of sophistication and training required by staff to operate the new technology A technology that requires the operator to adjust critical parameters would be rated as having a high skill requirement In some cases the operator may be insulated from the process by complex control equipment In such cases the operator skill level is low but the process complexity is high

Table 3 also lists the **Waste Products and Emissions** from the available cleaner technologies It indicates tradeoffs in potential pollutants the waste reduction potential of each and compatibility with existing waste recycling or treatment operations at the plant

Use the information in the text, from the references and from industry and trade groups to get more detail on the best candidates

The **Cleaner Cost per Gallon** column provides a preliminary measure of economics to be compared with the cost for solvents currently used Due to the diversity of cost data and the wide variation in plant needs and conditions it is not possible to give specific cost comparisons Cost analysis must be plant specific to adequately address factors such as the type and age of existing equipment space availability production volume product type customer specifications and cost of capital Where possible sources of cost data are referenced in the discussions of each cleaner technology

The **Energy Use** column provides a qualitative assessment of the energy requirements associated with each alternative

167

Table 2 Available Technologies for Alternatives to Chlorinated Solvents for Cleaning and Degreasing Descriptive Aspects

Technology Type	Pollution Prevention Benefits	Reported Application	Operational Benefits	Limitations
Aqueous Cleaners	No ozone depletion potential May not contain VOCs Many cleaners reported to be biodegradable	Excellent for removing inorganic and polar organic contaminants Used to remove light oils and residues left by other cleaning processes Used to remove heavy oils greases and waxes at elevated temperatures (>160 F)	Remove particulates and films Cleaner performance changes with concentration and temperature so process can be tailored to individual needs Cavitate using ultrasonics	Nonflammable and nonexplosive relatively low health risks compared to solvents consult Material Safety Data Sheet (MSDS) for individual cleaner Contaminant and/or spent cleaner may be difficult to remove from blind holes and crevices May require more floor space especially if multi stage cleaning is performed in line Often used at high temperatures (120 to 200 F) Metal may corrode if part not dried quickly rust inhibitor may be used with cleaner and rinsewater Stress corrosion cracking can occur in some polymers
Semi Aqueous Cleaners	Some have low vapor pressure and so have low VOC emissions Terpenes work well at low temperatures so less heat energy is required Some types of clean ers allow used solvent to be separated from the aqueous rinse for separate recycling or disposal	High solvency gives cleaners good ability for removing heavy grease waxes and tar Most semi aqueous cleaners can be used favorably with metals and most polymers NMP used as a solvent in paint removers and in cleaners and degreasers	Rust inhibitors can be included in semi aqueous formulations Nonalkaline pH prevents etching of metals Low surface tension allows semi aqueous cleaners to penetrate small spaces Glycol ethers are very polar solvents that can remove polar and nonpolar contaminants NMP used when a water miscible solvent is desired Esters have good solvent properties for many contaminants and are soluble in most organic compounds	NMP is a reproductive toxin that is transmitted dermally handling requires protective gloves Glycol ethers have been found to increase the rate of miscarriage Mists of concentrated cleaners (especially terpenes) are highly flammable hazard is overcome by process design or by using as water emulsions Limonene based terpenes emit a strong citrus odor that may be objectionable Some semi aqueous cleaners can cause swelling and cracking of polymers and elastomers Some esters evaporate too slowly to be used without including a rinse and/or dry process May be aquatic toxins
Petroleum Hydrocarbons	Produce no wastewater Recyclable by distillation High grades have low odor and aromatic hydrocarbon content (low toxicity) High grades have re duced evaporative loss	Used in applications where water contact with parts is undesirable Used on hard to clean organic contaminants including heavy oil and grease tar and waxes Low grades used in automobile repair and related service shops	No water used so there is less potential for corrosion of metal parts Compatible with plastics most metals and some elastomers Low liquid surface tension permits cleaning in small spaces	Flammable or combustible some have very low flash points so process equipment must be designed to mitigate explosion dangers Slower drying times than chlorinated solvents The cost of vapor recovery if implemented is relatively high
Hydrochloro fluorocarbons (HCFCs)	Lower emissions of ozone depleting substances than CFCs Produce no wastewater	Used as near drop in re placements for CFC 113 vapor degreasing Compatible with most metals and ceramics and with many polymers Azeotropes with alcohol used in electronics cleaning	Short term solution to choosing an alternative solvent that permits use of existing equipment No flash point	Have some ozone depletion potential and global warming potential Incompatible with acrylic styrene and ABS plastic Users must petition EPA for purchase per Section 612 of CAAA

(continued)

Table 2 (Continued)

Technology Type	Pollution Prevention Benefits	Reported Application	Operational Benefits	Limitations
Miscellaneous Organic Solvents	Do not contain halogens so they do not contribute to ozone depletion Most are considered biodegradable Generate no waste water when used undiluted	Most are used in small batch operations for spot cleaning	Alcohols are polar solvents and are good for removing a wide range of inorganic and organic contaminants soluble in water and may be used to accelerate drying Ketones have good solvent properties for many polymers and adhesives they are soluble in water and may be useful for certain rapid drying operations Vegetable oils are used to remove printing inks and are compatible with most elastomers Lighter alcohols and ketones have high evaporation rates and therefore dry quickly	Most evaporate readily and therefore contribute to smog Alcohols and ketones have low flash points and present a fire hazard Inhalation of these solvents can present a health hazard Some have vapor pressures that are too high to be used in standard process equipment MEK and MIBK are on EPA list of 17 substances targeted for use reduction
Supercritical Fluids (SCFs)	Nonpolluting when CO_2 is used as the super critical fluid Generate no wastewater Use natural or industrial sources of CO_2 so no net production of carbon	Remove organic contaminants of moderate molecular weight and low polarity Precision clean instrument bearings electromechanical assemblies direct access storage devices optical components polymeric containers porous metals ceramics Low viscosity and high diffusivity permit cleaning in very small cracks and pore spaces	Compatible with metals ceramics and polymers such as Teflon™ high density polyethylene epoxies and polyimides No solvent residue left on parts May be very useful for cleaning oxygen equipment Solvent properties can be altered by adding a cosolvent	Cosolvents used to improve the solvent power of CO_2 may have a pollution potential Danger of a pressure vessel explosion or line rup ture Cause swelling in acrylates styrene polymers neoprene polycarbonate and urethanes Components sensitive to high pressures and moderate temperatures should not be cleaned by SCF methods Ineffective in removing inorganic and polar organic contaminants for example does not remove fingerprints
Carbon Dioxide Snow	No polluting emissions released Replaces CFCs and solvents Does not generate wastewater Uses natural or indus trial sources of CO_2 so no net production of CO_2 occurs Carries contaminants away in a stream of inert CO_2	Cleans critical surfaces on delicate fiber optic equipment Cleans radioactive contaminated components Used in hybrid circuits to remove submicron particles Used on the largest most expensive telescopes Removes submicron particles and light oils from precision assemblies Removes light fingerprints from silicon wafers and mirrors Prepares surfaces for surface analysis	Generates no media waste thus no media disposal cost Does not create thermal shock Is nonflammable and nontoxic Noncorrosive Leaves no detectable residue Can penetrate narrow spaces and nonturbulent areas to dislodge contaminants Adjustable flake size and intensity More effective than nitrogen or air blasting Can clean hybrid circuits without disturbing the bonding wire	CO_2 must be purified Requires avoidance of long dwell times Particulates such as sand may be carried by the gas stream and scratch the surface Heavier oils may require the addition of chemicals and heat to be completely removed

Table 3 Available Technologies for Alternatives to Chlorinated Solvents for Cleaning and Degreasing Operational Aspects

Technology Type	Process Complexity	Required Skill Level	Waste Products and Emissions	Cleaner Cost per Gallon	Energy Use	Optional Post Cleaning Operations	References
Aqueous Cleaners	Medium	Medium	Skimmed oil filter trapped particulates and greases waste water and detergent	$6 10 typical dilutions range from 1 3 to 1 9	Medium—temperature control mechanical control drying	Rinsing—Some cleaners may leave a residue to facilitate removal use DI water and/or alcohol Drying—May be acceler ated by blowing with hot air or rubbing with absorbent material automated dryers are available	Gavaskar et al 1992 Monroe et al 1993 Munie 1991 Murphy 1991 Polhamus 1991 Ross and Morrison 1988 U S EPA 1991a b c Weltman and Evanoff 1992
Semi Aqueous Cleaners	Medium	Medium	Waste terpene con taining mostly organic material and aqueous part containing mostly inorganic material filters trap particu lates grease and non emulsified oil	$10 20 typical dilutions range from none to 1 9	Low—mechanical control drying	Cleaners may leave residue that is slow to evaporate water rinse may be required Drying may be needed if a water rinse is used rinsing with alcohol will speed drying	Darnall et al 1976 Hill and Carter 1993 IPC 1990 National Toxicology Program 1990 U S EPA 1991a b c U S EPA 1993
Petroleum Hydrocarbons	Low	Medium	Produce no waste water when used undiluted VOCs are emitted waste solvent incinerated as fuel or recycled by distillation	$1 3 for kerosene and mineral spirits $7 12 for metal cleaning formula tions up to $30 for some specialty and electronic cleaning formulations most often used without water	Low—mechanical control drying	Parts may be dried by forced air or by some other method	IPC 1990 U S EPA 1991a b
Hydrochloro fluorocarbons (HCFCs)	Low	Medium	Still bottoms contam inated solvent HCFCs emitted to air unless closed loop system is used	$30 35	High—maintain boiling temperature run primary and possibly secondary condensing systems	None	Basu et al 1991 Finegan and Rusch 1993 Kitamura et al 1991 U S EPA 1991a b

(continued)

Table 3 (Continued)

Technology Type	Process Complexity	Required Skill Level	Waste Products and Emissions	Cleaner Cost per Gallon	Energy Use	Optional Post Cleaning Operations	References
Miscellaneous Organic Solvents	Low	Low	Waste solvents	$2 20	Low—primarily suited for small scale and local cleaning	Vegetable oil cleaning requires a secondary cleaning step	Burow 1993 Environmental Program Office 1991 Hill and Carter 1993 U S EPA 1991a b
Supercritical Fluids	High	High	Contaminants are condensed in a vessel CO_2 gas may be vented to the atmosphere or purified and reused	Cost of high purity CO_2 (about 7¢/lb) is insignificant compared to installation cost	Low—Energy is required to operate pumps to perform supercritical cleaning	Remove part from pressure vessel	Airco Gases N D Gallagher and Krukonis 1991 Lira 1988 Salerno 1990 Schneider 1978 U S EPA 1991 Woodwell 1993
Carbon Dioxide Snow	Medium	Medium	Solid coating residue waste Airborne particulates CO_2 gas	Cost of welding grade CO_2 is about 7¢/lb	Medium— Carbon dioxide liquefier Refrigeration unit Compressed gas sup ply to propel blasting media Requires current between 8 and 14 5 amps Requires voltage between 115 and 230 V	Requires dry air stream or chamber to prevent water condensation while parts are cold	Hoenig 1990 Layden and Wadlow 1990 Sherman and Whitlock 1990 Whitlock 1989 Zito 1990

The **Optional Post-Cleaning Operations** column summarizes additional rinsing drying or other opera tions that may be needed following cleaning or de greasing These are noted to indicate special considerations in the application of the cleaner technol ogy

The last column in Table 3 lists **References** to publica tions that will provide further information for each alternative These references are given in full at the end of the respective available technology sections

The text further describes the pollution prevention benefits reported application operational benefits and limitations for each technology Technologies in earlier stages of development are summarized to the extent possible in Section 3 Emerging Technologies

Aqueous Cleaners

Pollution Prevention Benefits

The primary pollution prevention benefit of aqueous cleaners is that they are non ozone depleting and may not contain VOCs Aqueous cleaners that are nonhazardous initially remain so unless they become contami nated with hazardous materials during cleaning operations In some cases spent cleaner can be treated to remove contaminants, which may allow them to be discharged to sewers provided that the effluents meet local discharge requirements

How Do They Work?

Aqueous cleaners are mixtures of water detergents and other additives that promote the removal of organic and inorganic contaminants from hard surfaces Each component of an aqueous cleaner performs a distinct function and affects the way the contaminant is re moved from a substrate

Surfactants or surface action agents provide detergency by lowering surface and interfacial tensions of the water so that the cleaner can penetrate small spaces better get below the contaminant and help lift it from a substrate Surfactants may be *cationic anionic* or *nonionic* in nature These terms refer to the aqueous phase properties of their hydrophilic portions (see below) The anionic and nonionic types most often are used in immersion cleaning nonionic surfactants have lower foam producing characteristics and are preferred in applications where agitation is used

Nonionic surfactants are preferred in applications using agitation

Surfactants are characterized empirically by their hydrophilic lipophilic balance (HLB) which describes a relationship between their water soluble (hydrophilic) and oil soluble (lipophilic) portions Oil soluble surfac tants have low HLB values and highly water soluble surfactants have high HLB values Typical HLB ranges and applications of surfactants are shown in Table 4

Table 4 Hydrophilic-Lipophilic Balance Ranges and Applications of Surfactants

HLB Value	Application
3 5 6	Water in oil emulsifier
7 9	Wetting agent
8 18	Oil in water emulsion
13 15	Detergent
15 18	Solubilizer

Source Ross and Morrison 1988

In the category of anionic surfactants sulfosuccinates are commonly used as wetting agents whereas long chain sulfonates fatty alcohol sulfates and alkali soaps are used as emulsifiers Among the nonionic surfac tants ethoxylated alkylphenols are used as wetting agents and emulsifiers while glycol ethers (Cellosolves™) and ethylene oxide condensates of alkylphenols are used as emulsifiers (Ross and Morrison, 1988)

In addition to HLB Monroe et al (1993) describe the utility of surfactant chain length ethylene oxide/propy lene oxide content cloud point and critical micelle concentration in selecting surfactants for aqueous cleaning Another important surfactant selection factor is emulsion stability which depends on a complex interaction of properties such as droplet size interfacial viscosity repulsion terms and internal volume (Ross and Morrison 1988)

Emulsifiers disperse contaminants in water

Oil in water emulsifiers cause water immiscible con taminants such as oil or grease to become dispersed in the water This kind of emulsification can be accom plished by surfactants with moderate to high HLB values Many kinds of surfactants are used as emulsifi ers in aqueous cleaners however users should be aware that some are hazardous and should note OSHA or NIOSH exposure limits on the Material Safety Data Sheet (MSDS) provided with the product Examples of hazardous components found in some aqueous cleaners are 2 butoxyethanol (or ethylene glycol butyl ether CAS#111 76 2) 2 ethoxyethanol (or ethylene glycol ethyl ether CAS#110 80 5) and dipropylene glycol methyl ether (CAS#34590 94 8) Oil in water emulsifiers are most useful when a small amount of

172

contaminant is present so that the cleaner does not become loaded too quickly Oil in water emulsifiers are undesirable in situations where a large amount of oil is to be removed In cleaning situations where the oil content is high a better methodology is to rely on the oil s natural immiscibility with water and allow *separa tion* to occur so that the lighter fractions can be skimmed off the top and the heavier fractions can be removed by filtration The volume of waste generated is greatly reduced using this kind of phase separation technique and the lifetime of the cleaner is thereby extended

Deflocculants assist in dispersion

Chemicals added to help maintain the dispersion of contaminant particles in the cleaning medium are known as **deflocculants** Deflocculants may be anionic or nonionic surfactants or they may be inorganic salts such alkali phosphates Because many emulsions remain stable only at elevated temperatures and under alkaline conditions, separation of the oily fraction from the aqueous cleaner often can be induced in emulsion type aqueous cleaners by lowering the temperature and sometimes by acidifying the bath Individual manufacturers can provide information on their specific oil separation techniques

Saponifiers form soaps

Saponifiers are compounds that react chemically with oils containing fatty acids to form soaps Vegetable oils and animal fats (triglycerides) are examples of sub stances that can be saponified by alkalis It is common for some contaminants in a particular kind of 'soil to be saponifiable whereas others are not For example thickeners added to a base oil to form grease may be saponifiable whereas the base oil may not Neverthe less the grease is more readily removed by this kind of chemical action Coupled with saponifiers surfactants can act as wetting agents to help remove contaminants from the surface

The organic amines comprise an important class of saponifiers Organic amines can react with many common hydrocarbon contaminants including the saponifiable portion of solder flux rosin (Munie 1991) However users should be aware that the organic amines are hazardous and also should note OSHA or NIOSH exposure limits on the MSDS provided with the product Examples of organic amines found in some aqueous cleaners are ethanolamine (CAS#141-43 5) diethanolamine (CAS#111 42 2) and triethanolamine (CAS#102 71 6) The organic amines range in volatility according to molecular weight and will volatilize (evaporate) over time when the cleaner is used at high temperatures As the loss of these compounds will affect cleaning performance the cleaner may require maintenance to restore its chemical balance

Aqueous cleaners tend toward mild to high alkalinity

Alkalinity is a property of aqueous media which describes its ability to neutralize acid Alkalinity is not a factor of pH alone but also is a measure of a solution s ability to *buffer* itself against acid Buffering capacity provides stability so that the chemical environment of the cleaner is not subject to abrupt pH and other chemical changes Alkalinity also promotes detergency Aqueous cleaners range in alkalinity from mild alkaline (pH 8 to 10) to high alkaline (pH 12 and higher) Mild alkaline conditions prevent etching of most metals which have solubility minima in the range of pH 8 to 11 Two important cases where mild alkaline cleaners should be used are aluminum and magnesium which are readily etched above pH 11 Mild alkalinity often is maintained by soluble silicates, carbonates, borates, and citrates

In some cases, high alkalinity is desired to remove metal oxides and hydroxides from a surface to provide a fresh surface Highly alkaline (caustic) cleaners are used to prepare metal surfaces prior to plating Typi cally, very high pH (>12) is achieved by adding strong bases such as sodium hydroxide (lye) or potassium hydroxide Highly alkaline cleaners often are used to remove heavy grease and oil from corrosion-resistant steels The hydroxide ions attack the saponifiable part (e g the thickeners) of the grease and oil

Sequestering agents assist cleaning in hard water Other additives enhance cleaning performance in various ways

Sequestering agents prevent the mineral content of hard waters (mostly waters rendered hard by calcium and magnesium ions) from forming insoluble products with the cleaner The use of sequestering agents permits the cleaner to attack only the contaminant and ensures that lower cleaner concentrations are needed Common chelating agents such as sodium EDTA NTA and ODA typically are used to sequester cations In all aqueous cleaners the alkalis deflocculants and sequestering agents are referred to as **builders** Other additives may be included to enhance overall cleaning performance for example **anti-foaming agents and corrosion inhibitors** Corrosion inhibitors work either by *passivating* the surface through adsorption of a molecular species onto it that will react with oxygen before the metal can oxidize or by forming a protective *barrier* over the surface that excludes oxygen

173

Operating Features

Aqueous cleaning and degreasing can be performed for a wide variety of applications including those that once were considered the domain of vapor degreasing or cold solvent cleaning However some ferrous metals may exhibit flash rusting in aqueous environments therefore such parts should be tested prior to full scale use

The cleaner chosen depends both on contaminant type and the type of process equipment to be used

Many kinds of aqueous cleaning products are avail able Thus some investigation is required to find cleaners that are most effective against the contami nants typically encountered and to find cleaners that give the best performance with the process equipment that will be used Whereas solvents depend largely on their ability to dissolve organic contaminants on a molecular level aqueous cleaners utilize a combination of physical and chemical properties to remove macro scopic amounts of organic contaminants from a sub strate Aqueous cleaning is more effective at higher temperatures and normally is performed above 120°F using suitable immersion spray, or ultrasonic washing equipment For this reason good engineering practices and process controls tend to be more important in aqueous cleaning than in traditional solvent cleaning to achieve optimum and consistent results

When switching from solvent cleaning to aqueous cleaning users must be aware that parts usually need to be rinsed and will remain wet for some time unless action is taken to speed up the drying process Three common methods for drying parts are *evaporation displacement* and *mechanical removal* (Polhamus 1991)

Techniques exist to speed up evaporation

Evaporation of rinsewater under ambient conditions is slow depends on temperature and humidity and creates an opportunity for dust to settle onto the part A heat lamp can speed the process but is dependent on orientation and still exposes the parts to air contact Parts can be dried in small batches in a vacuum oven Evaporation is improved by the technique of *hot air recirculation* in which heated air is recirculated within a large chamber makeup air is continuously introduced to replenish moist air which is slowly exhausted Another method called *evaporative drying* passes dry air or inert gas (to lessen the tendency for oxidation) through a chamber to provide laminar flow past the wet parts

Displacement uses water or oil to peel off water

Displacement methods include capillary or slow pull drying With this method a hot part is extracted slowly from equally hot deionized water The surface tension of the water in effect peels the water off the part whatever water is left readily vaporizes Another displacement technique common to metalworking uses oil to displace water from the part The oil also acts as a rust inhibitor by forming a protective barrier between the part surface and the air However if the cleaning objective is to produce a residue free surface this latter option would be inappropriate

Mechanical removal includes blowing and spinning techniques

Mechanical removal techniques also are commonly used *Air knives* blow water off the part with high pressure air *Centrifugal drying* spins the water off Aqueous cleaners are available in the form of concen trated liquids and as powders The concentrated liquids cost between $6 and $10 per gallon when purchased in drum-size quantities They are diluted 1 3 to 1 10 with water for most applications The cost of powders is equivalent when prepared to the same final concentra tions

The cleaner s longevity also must be considered when evaluating cost Filtering to remove particulates and skimming to remove oil will extend a cleaner s lifetime Other benefits of these actions include more uniform cleaning performance and reduced disposal costs because the oily wastes collected can be disposed of separately

Technologies exist for separating the contaminants removed by aqueous cleaners from the wastewater to lower disposal costs

Waste disposal costs can be kept low by discharging the bulk of the used cleaner to a sewer In choosing an aqueous cleaner it must be determined whether rinsewater can be discharged to a local sewer If municipal or other restrictions are in effect the cost of performing all required pretreatments must be consid ered and included in estimates of an operating budget It is necessary to treat the cleaner prior to disposal if dissolved metals can be precipitated or absorbed onto a substrate using a number of developed technologies Suspended solids can be removed by small pore filters (10 µm or less) Emulsified oil can be separated from the aqueous cleaner by means of coalescing equip ment or advanced membrane ultrafiltration techniques

174

Cleaning system equipment manufacturers should be consulted to determine the best approach

Application

Aqueous cleaners have been used for a long time by metal finishers and new products are continually being developed for an expanding market Primary deter gents are used to process buffed metals at tempera tures of at least 120°F Alkaline detergent cleaners are used to remove light oils and residues (including solvents or other types of cleaners) left by manufac turing processes shop dirt and light scale Alkaline cleaners are used at elevated temperatures ranging from 120 to 200°F (Murphy 1991) Field evaluations of aqueous cleaners are available from U S EPA s Waste Reduction Innovative Technology Evaluation (WRITE) Program For example see Gavaskar et al (1992) Weltman and Evanoff (1992) discuss performance materials compatibility and regeneration of aqueous cleaners

Benefits

The ability of aqueous cleaners to remove most contaminants has been demonstrated in numerous tests Aqueous cleaners are capable of removing inorganic contaminants, particulates and films They also exhibit considerable flexibility in application because their performance is strongly affected by formulation dilution and temperature The formulation that gives the best results can be found through some investigation and the user can select the dilution factor and temperature that give the best results

Limitations

Health and Safety Health risks associated with aqueous cleaners are relatively low However as noted earlier some aqueous cleaners contain organic substances that may be hazardous Because aqueous cleaners are nonflammable there is no risk of fire Material Safety Data Sheets (MSDSs) for individual products should be consulted before use

Compatibility with Materials Metal corrosion may occur if parts cannot be dried quickly enough A rust inhibitor may be used along with the cleaner to help prevent rust Stress corrosion cracking can occur in some polymers as a result of contact with alkaline solutions Consult with cleaner manufacturers to obtain recommended formulations and procedures

Water Tolerance The most important factor in aque ous cleaning is whether the product and/or process can tolerate water Compatibility of the product/process with water must be carefully investigated

References

Gavaskar A R R F Olfenbuttel and J A Jones 1992 *An Automated Aqueous Rotary Washer for the Metal Finishing Industry* EPA/600/SR 92/188 U S Environmental Protection Agency Project Summary

Monroe K R , E A Hill and K D Carter Jr 1993 "Surfactant Parameter Effects on Cleaning Effi ciency In *Proceedings of the 1993 International CFC and Halon Alternatives Conference* The Alliance for Responsible CFC Policy Washington D C pp 405-414

Munie, G C 1991 'Aqueous Defluxing Materials Processes, and Equipment In L Hymes (Ed) *Cleaning Printed Wire Assemblies in Today s Environment* Van Nostrand Reinhold New York New York pp 120 150

Murphy, M (Ed) 1991 *Metal Finishing Guidebook and Directory*, Vol 89, No 1a Metals and Plastics Publications Inc Hackensack New Jersey pp 106-121

Polhamus, R L 1991 "Precision Cleaning of Metal Parts without Solvents *Metal Finishing*, September, pp 45-47

Ross S and Morrison I D 1988 "The HLB Scale *Colloidal Systems and Interfaces* John Wiley & Sons New York New York p 274

U S Environmental Protection Agency 1991a *Aque ous and Semi Aqueous Alternatives for CFC 113 and Methyl Chloroform Cleaning of Printed Circuit Board Assemblies* EPA/401/1 91/016 Prepared by the Industrial Cooperative for Ozone Layer Protec tion Technical Committee and U S EPA Washing ton D C

U S Environmental Protection Agency 1991b *Eliminating CFC 113 and Methyl Chloroform in Precision Cleaning Operations* EPA/401/1 91/018 Prepared by the Industrial Cooperative for Ozone Layer Protection Technical Committee and U S EPA Washington D C

U S Environmental Protection Agency 1991c *Aque ous and Semi Aqueous Alternatives for CFC 113 and Methyl Chloroform in Metal Cleaning* EPA/400/ 1-91/019, Washington D C

Weltman H J and S P Evanoff 1992 "Replacement of Halogenated Solvent Degreasing with Regener able Aqueous Cleaners *46th Purdue Industrial Waste Conference Proceedings* Lewis Publishers Inc Ann Arbor Michigan pp 851 871

175

Semi-Aqueous Cleaners

Pollution Prevention Benefits

The primary pollution prevention benefit of semi-aqueous cleaners is that they are non ozone depleting However they may be partly or completely composed of VOCs In addition their use commands substantially more concern about aquatic toxicity and human exposure than does the use of aqueous cleaners Most semi-aqueous cleaners are reported to be biodegrad able One benefit of semi aqueous cleaners is that distillation and membrane filtration technologies are being developed that will permit recycling and reuse of the products

How Do They Work?

Semi aqueous cleaners comprise a group of cleaning solutions that are composed of natural or synthetic organic solvents surfactants corrosion inhibitors and other additives The term *semi aqueous* refers to the use of water in some part of the cleaning process such as washing, rinsing or both Semi-aqueous cleaners are designed to be used in process equipment much like that used with aqueous cleaners The commonly used semi aqueous cleaners include water-immiscible types (terpenes high molecular-weight esters petro leum hydrocarbons and glycol ethers) and water miscible types (low molecular-weight alcohols ketones esters, and organic amines) Petroleum hydrocarbons are the next Available Technology to be discussed in this *Guide* Alcohols and ketones are discussed in Available Technologies under Miscellaneous Organic Solvents One water miscible solvent *N* methyl-2-pyrrolidone (NMP) commonly is used for large scale cleaning and paint removing and so is included in this discussion of semi aqueous cleaners

Terpenes derived from citrus oils frequently are used in semi-aqueous cleaners

Terpenes are natural hydrocarbons used in semi-aqueous cleaners There are many kinds of terpenes Among them *d*-limonene and α and β pinene are listed most frequently in commercial semi aqueous cleaners Terpene alcohols and para menthadienes also are used Terpenes are derived from plant sources such as citrus (orange grapefruit and lemon) and pine oils Although terpenes are not miscible in water they do form emulsions with water that are stabilized by surfactants and other additives

Terpenes may be diluted for use on less difficult contaminants

In cleaning applications terpenes may be used undi luted or diluted with water Dilution reduces cleaning performance but on the other hand decreases usage reduces expense and lowers vapor pressure which decreases vapor emissions Diluted terpene semi aqueous cleaners may produce acceptable results with less difficult contaminants

Terpenes have relatively low flash points (about 115 to 120°F) and so it is unsafe practice to heat them above about 90°F except when used in an inert atmosphere or when diluted to a safe concentration with water as recommended by the product manufacturer Some commercial formulations of terpene based cleaners and degreasers contain higher molecular weight hydrocarbons which lower the volatility of the terpene hydrocarbon mixture and increase the flash point

Low-molecular-weight esters are soluble in water

Esters have good solvent properties for many contami nants and are soluble in most organic compounds High molecular-weight esters have limited solubility in water, whereas low-molecular-weight esters are soluble in water The types of high molecular weight esters most often used in cleaning and degreasing include aliphatic mono-esters (primarily alkyl acetates) and dibasic acid esters Dibasic acid esters are made by reacting alcohols such as methyl ethyl propyl or butyl alcohol, with dicarboxilic acids, such as glutaric acid adipic acid and succinic acid High molecular weight esters may be used either cold or heated to improve cleaning performance

Among the low molecular weight esters (L) ethyl lactate is reported to have good cleaning health and safety properties (Hill and Carter 1993) Ethyl lactate is an ethyl ester of (L) lactic acid It is a VOC with moderate flash point (126°F) Additional information on ethyl lactate is given in the Available Technology section Miscellaneous Organic Solvents Other esters that currently are being studied for cleaning and degreasing solvents are the small cyclic esters such as ethylene carbonate and propylene carbonate

Glycol ethers have good solvent properties but are a health risk

Glycol ethers also have good solvent properties for common contaminants They form emulsions with water that can be separated for recycling Health concerns relating to the use of both the ethyl and propyl series glycol ethers are now being examined in the wake of reports that they cause an increased rate of miscarriage among women

176

NMP has solvent properties, is miscible with water and other compounds, and can be used cold or heated

N-methyl-2 pyrrolidone, or **NMP**, has been used in the chemical and petrochemical industries as a solvent for extraction and as a formulating agent for coatings, paint removers and cleaners NMP has high solvency for a number of contaminants It normally is used undiluted but it can be mixed with water NMP is completely miscible with water and organic compounds such as esters ethers alcohols ketones aromatic and chlorinated hydrocarbons and vegetable oils NMP can be used cold or heated because of its high flash point (about 199°F)

Operating Features

Semi aqueous cleaners are designed to be water rinsable or non-water rinsable After washing in a water-rinsable type, cleaned parts may be rinsed in water to remove residue If a non water rinsable type is used cleaned parts may be rinsed in alcohol such as isopropyl alcohol, or other organic solvent or the residue may be allowed to remain on the parts If rinsing is the desired option it is common practice to rinse in a secondary tank to capture dragout cleaner

Several technologies allow semi-aqueous cleaners to be separated from the waste-water to be recycled or discharged for treatment

If the semi aqueous cleaner is diluted with water to form an emulsion the cleaner can be coalesced into its aqueous and nonaqueous components by gravity separation or by advanced membrane separation techniques These techniques permit used cleaner to be recycled back into the wash tank or discharged for treatment and disposal Vacuum distillation can be used to purify single component solvents Reclaimed rinsewater also can be reused or discharged

Proper use of these cleaners is required to reap their full pollution prevention benefits Good engineering design is essential so that air emissions can be kept low For example

The cleaning bath should be operated at the minimum temperature where acceptable cleaning performance is obtained
Low vapor pressure cleaning agents should be used
Dragout should be minimized by the use of air knives
The air exhaust rate should be maintained at a minimum level

Knowing the flash point is important when heating semi aqueous cleaners

Terpene semi-aqueous cleaners normally are used at ambient temperature or heated to no higher than 90°F However many high molecular weight esters have flash points in excess of 200°F Also the glycol ethers generally have flash points above 200°F and can be heated for improved solvency

NMP has been used for removing cured paint and hence is a substitute for methylene chloride NMP is better suited for immersion tanks than other application methods because elevated temperatures are required to enhance its chemical activity Usually NMP immer sion cleaning or paint removing is done at 155°F in an open tank or up to 180°F if a mineral oil seal is present

Semi-aqueous cleaners are effective on heavy grease, tar, and waxes, and can penetrate small crevices

In general, the semi aqueous cleaners have excellent solvency for a number of difficult contaminants, such as heavy grease tar and waxes The cleaners have low surface tension, which decreases their contact angles and allows them to penetrate small spaces such as crevices blind holes and below surface mounted electronic components

As with aqueous cleaners rinsing is necessary to avoid leaving a residue on the cleaned parts If water rinsing is performed the parts must be dried The methods of drying cited for aqueous cleaners apply here as well If rinsing is done by a volatile organic solvent such as isopropyl alcohol then drying will be accelerated

Semi aqueous cleaners are widely available Terpenes, esters and glycol ethers are typically priced from $10 to $20 per gallon when purchased in drum size quantities The cost of NMP is higher about $25 to $30 per gallon when purchased by the drum

More waste streams must be managed with semi aqueous cleaners than with either solvent cleaning or aqueous cleaning Each waste stream can increase costs

Application

Semi aqueous hydrocarbon cleaners first gained acceptance in the metal cleaning industry where they were known as *emulsion cleaners* Semi aqueous cleaners currently are gaining wider appeal in all types of industries where parts are cleaned such as metal fabrication electronics and precision parts manu

177

facturing The performance of some of these cleaners has been validated in government tests for example the Phase 2 Standards for Electronic Components issued by The Institute for Interconnecting and Packaging Electronic Circuits (IPC 1990)

Benefits

Semi aqueous cleaners may have certain advantages over aqueous cleaners for example semi aqueous cleaners

> May be more aggressive in removing heavy organic contaminants
> May have lower corrosion potential with water sensitive metals
> Penetrate small spaces more easily because they have lower surface tensions

Limitations

Health and Safety Mists of concentrated semi-aqueous cleaners can be ignited at room temperature Terpenes are a special concern because they have the flash points as low as 115°F The low flash point restricts safe operating temperatures to no more than 90°F in some cases Washing equipment should be designed to avoid creating mists such as by spraying or agitating below the fluid surface or by using ultrasonic action Also equipment used with low-flash point cleaners should have overtemperature protection

> *Health effects of semi-aqueous cleaners require further research*

The health effects associated with using semi aqueous cleaners have not been fully explored Limited testing of *d* limonene has yielded positive carcinogenicity results in male rats (National Toxicology Program, 1990) Also the terpenes in general and *d*-limonene in particular are highly photochemically reactive (Darnall et al 1976) so it is desirable to minimize losses Another concern with terpenes is that their strong odors may become objectionable to workers thus requiring additional ventilation in areas where they are used

The reproductive health problems associated with glycol ethers are a cause for serious concern Whether glycol ethers can be used safely will have to be established by further testing U S EPAs Office of Pollution Prevention and Toxics (OPPT) recently published a report stating that NMP could present a significant risk of reproductive and developmental harm to humans (U S EPA 1993) The route of entry is dermal so it is believed that protective gloves may be sufficient in preventing harmful exposure OPPT is currently working with NMP product manufacturers to resolve the issues of worker health and safety

Although semi aqueous cleaners are biodegradable the capacity of treatment facilities to treat wastewater must be understood For example, the residence time of a waste stream in older industrial wastewater treatment facilities may be too short to effect complete degradation In such cases an add on treatment system should be considered An industrial plant may consider purchasing a batch-type or continuous flow fixed film or other type biological reactor to process rinsewater from semi aqueous cleaning This kind of add on treatment system may be essential if wastewa ter otherwise would be discharged directly to a publicly owned treatment works (POTW)

> *Semi-aqueous cleaners do not corrode most metals or plastics Use on some rubbers and plastics is not recommended*

Compatibility with Materials Semi aqueous cleaners are noncorrosive to most metals and generally are safe to use with most plastics Terpenes generally are not recommended for cleaning polystyrene PVC polycarbonate low density polyethylene and polymethylpen tene, nor are they compatible with the elastomers natural rubber silicone and neoprene NMP dissolves or degrades ABS Kynar™ Lexan™ and PVC and it causes swelling in Buna N Neoprene and Viton™ Glycol ethers seem to degrade polystyrene and cause swelling in the elastomers Buna N and silicone rubber

References

Darnall K R A C Lloyd A M Winer and J N Pitts Jr 1976 Reactivity Scale for Atmospheric Hydrocarbons Based on Reaction with Hydroxyl Radical *Environ Sci Technol 10* 692

Hill E A , and K D Carter Jr 1993 'An Alternative to Chlorinated Solvents for Cleaning Metal Parts In *Proceedings of the 1993 International CFC and Halon Alternatives Conference* The Alliance for Responsible CFC Policy Washington D C pp 465 471

IPC (The Institute for Interconnecting and Packaging Electronic Circuits) 1990 *Cleaning and Cleanliness Testing Program Phase 1 & 2 Cleaning Alterna tives* A joint industry/military/EPA program to evaluate alternatives to chlorofluorocarbons (CFCs) for printed board assembly cleaning IPC Lincolnwood Illinois

National Toxicology Program 1990 *Toxicology and Carcinogenesis Studies of d Limonene (CAS NO*

178

5989-27 5) in F344/N Rats and B6CF, Mice (Gavage Studies) Technical Report Series No 347 U S Department of Health and Human Services Public Health Service National Institutes of Health

U S Environmental Protection Agency 1991a *Aqueous and Semi-Aqueous Alternatives for CFC 113 and Methyl Chloroform Cleaning of Printed Circuit Board Assemblies* EPA/401/1-91/016 Prepared by the Industrial Cooperative for Ozone Layer Protection Technical Committee and U S EPA Washington D C

U S Environmental Protection Agency 1991b *Eliminating CFC 113 and Methyl Chloroform in Precision Cleaning Operations* EPA/401/1-91/018 Prepared by the Industrial Cooperative for Ozone Layer Protection Technical Committee and U S EPA Washington D C

U S Environmental Protection Agency 1991c *Aqueous and Semi Aqueous Alternatives for CFC-113 and Methyl Chloroform in Metal Cleaning* EPA/400/1 91/019 Washington D C

U S Environmental Protection Agency 1993 *Lifecycle Analysis and Pollution Prevention Assessment for N-Methylpyrrolidone (NMP) in Paint Stripping* Final Assessment Public RM2 Administrative Record Document Office of Pollution Prevention and Toxics Washington D C

Petroleum Hydrocarbons

Pollution Prevention Benefits

The primary pollution prevention benefits of petroleum hydrocarbon solvents are that they produce no wastewater and they are recyclable by distillation Paraffinic grades have very low odor and aromatic content and low evaporative loss rates However, planned recovery of VOCs is an important part of pollution prevention if these solvents are to be used

How Do They Work?

Petroleum hydrocarbons are available in two grades the basic *petroleum distillates* and the specialty grade of synthetic *paraffinic hydrocarbons* Products of the petroleum distillate grade include mineral spirits kerosene white spirits, naphtha Stoddard Solvent and PD 680 (military designation types I II and III) These are technologically less advanced as they contain components that have a broad range of boiling points and may include trace amounts of benzene derivatives and other aromatics Petroleum distillates were available many years before chlorinated solvents attained their popularity

More recently improved separation and synthesis techniques have led to the production of the specialty grade of paraffinic hydrocarbons Paraffins are straight chain branched or cyclic alkanes they are aliphatic as opposed to aromatic (i e derived from benzene and naphthalene) The number of carbons in the paraffin solvent typically ranges from 10 to 14 Compared to petroleum distillates the paraffinic hydrocarbons have very low aromatic content narrower boiling ranges and higher solvency and they are more expensive

> *Nonpetroleum additives often are used to raise the flash point of petroleum hydrocarbons*

Hydrocarbon solvents work by dissolving organic soils Some solvents that have flash points as low as 105°F must be used at ambient temperature to avoid a fire hazard Many high grade hydrocarbon solvents have flash points above 140°F Higher flash points are achieved using higher-molecular weight compounds Some formulations contain nonpetroleum additives such as high-molecular-weight esters to improve solvency and raise the flash point

When the cleaning lifetime of a hydrocarbon solvent expires the entire bath must be replaced Used hydrocarbon solvents commonly are blended with other fuels and incinerated in cement kilns

Petroleum hydrocarbons typically are used when water contact with the parts is undesirable Cleaning with petroleum distillates lends itself to simple inexpensive one step cleaning in situations where a high level of cleanliness is not essential

Operating Features

Petroleum hydrocarbons have high solvencies for many "hard to clean organic soils including heavy oil and grease tar and waxes In addition they have low liquid surface tensions (~22 to 28 dynes/cm) which allows them to penetrate and clean small spaces

Mineral spirits cost around $3 per gallon and paraffinic hydrocarbons for metal cleaning cost from $7 to $10 per gallon when purchased in drum-size quantities Specialty-grade paraffinic hydrocarbons for electronic cleaning may cost up to $30 per gallon

Because hydrocarbon cleaners have slower drying times than chlorinated solvents parts may be dried by forced air or by oven drying Restrictions on VOC emissions may apply in some areas If so the cost of

vapor recovery also must be considered when evaluat ing the cost of using these solvents

Application

Petroleum distillates have had a long history of use particularly in automobile repair and related service areas Specialty-grade paraffinic hydrocarbons have become widely available only recently but are reported to be used for a broad range of metal cleaning and electronics defluxing purposes They currently are undergoing rapid development for specialized cleaning operations The performance of some of these solvents has been validated in government tests for example the Phase 2 Standards for Electronic Components issued by The Institute for Interconnecting and Packag ing Electronic Circuits (IPC, 1990)

Benefits

No water is used with hydrocarbon cleaners so there is no potential for water corrosion or for water to become trapped in cavities Some precision cleaning operations are most effective with hydrocarbon cleaners

Limitations

Health and Safety Petroleum hydrocarbons are flammable or combustible and some have very low flash points as low as 105°F Process equipment including drying ovens, must be designed to mitigate explosion dangers The toxicity level of hydrocarbon solvents is considered low 8 hour PELs for Stoddard solvent and VM & P naphthas are 100 ppm and 400 ppm, respectively Values for synthetic petroleum hydrocarbons have not been determined yet but they are expected to be higher than the values for petroleum distillates Products with high flash points evaporate more slowly than low-flash point solvents

Residues may remain on the parts long after they are cleaned Petroleum distillates contain compounds with different molecular weights and hence a range of evaporation rates In addition some specialty solvents are blends of paraffinic hydrocarbons and other organic solvents In either case the less volatile components may be left on the parts after the bulk liquid has evaporated Furthermore contaminated solvents will tend to leave a residue so they should be replaced when slow drying or residue becomes a problem If residues are unacceptable a second level of cleaning may be needed Follow up cleaning may include rinsing in a clean or more volatile organic solvent or aqueous cleaning

Hydrocarbons are VOCs and hence they are photo chemical smog producers Restrictions against their use may be realized in the future Businesses choosing this alternative must consider the expenses of possible requirements for recovering VOCs from exhaust equipment

Compatibility with Materials Hydrocarbon cleaners are compatible with most metals and plastics and with some elastomers

References

IPC (The Institute for Interconnecting and Packaging Electronic Circuits) 1990 *Cleaning and Cleanliness Testing Program Phase 1 & 2 Cleaning Alterna tives* A joint industry/military/EPA program to evaluate alternatives to chlorofluorocarbons (CFCs) for printed board assembly cleaning IPC Lincolnwood Illinois

U S Environmental Protection Agency 1991a *Elimi nating CFC-113 and Methyl Chloroform in Precision Cleaning Operations* EPA/401/1-91/018 Prepared by the Industrial Cooperative for Ozone Layer Protection Technical Committee and U S EPA, Washington D C

U S Environmental Protection Agency 1991b *Aque ous and Semi-Aqueous Alternatives for CFC-113 and Methyl Chloroform in Metal Cleaning* EPA/400/ 1-91/019 Washington, D C

Hydrochlorofluorocarbons (HCFCs)

Pollution Prevention Benefits

Hydrochlorofluorocarbons or HCFCs were developed to lower emissions of ozone-depleting substances that are used in cleaning foam blowing agents and refrigerants Although HCFCs accomplish the goal of reducing emissions, they have some Ozone Depletion Potential—about 0 15 for HCFC 141b and 0 033 for HCFC 225cb—relative to CFC 113 which is 1 0 Therefore HCFC 141b depletes ozone at a rate about 6 or 7 times less than that of CFC 113 but about equal to that of TCA (see Table 5) The ozone depletion rate for HCFC 225cb is about 30 times lower than that of CFC 113

How Do They Work?

HCFCs are designed to be near replacements to CFC 113 for vapor degreasing However the properties of the HCFCs differ somewhat from those of CFC 113 so that vapor degreasing equipment that was designed for CFC-113 would have to be retrofitted to accommodate HCFCs

Table 5 **Physical Properties[a] of CFC 113 and HCFCs**

Compound	CFC 113	HCFC 141b	HCFC 225ca	HCFC 225cb
Molecular Weight	187 38	116 95	202 94	202 94
Boiling Point (°C)	47 6	31 7	51 1	56 1
Freezing Point (°C)	35	103	112	116
Liquid Density (cm^3)	1 57	1 24	1 55	1 56
Liquid Viscosity (cps)	0 68	N/A	0 58	0 60
Liquid Surface Tension (dyne/cm)	17 3	19 3	15 8	16 7
Heat of Vaporization (cal/g)	34	51	33	33
Kauri Butanol Value	31	56	34	30
Flash Point	None	None	None	None
Relative Evaporation Rate (Ether=100)	123	120	101	84
Azeotropic Composition with Alcohol (wt%)				
Methanol	93 6/6 4	96 0/3 9[b]	94 7/5 3	93 3/6 7
Boiling Point (°C)	39	29 4	45 5	47 2
Ethanol	96 2/3 8	No data	97 3/2 7	95 6/4 4
Boiling Point (°C)	44 5		50 0	53 8
ODP	0 8	0 15	0 025	0 033

[a] Property measurements at 25 C
[b] 0 1% Nitromethane added
Sources Basu et al 1991 Kitamura et al 1991

Two basic chemistries of HCFCs are being used for vapor degreasing HCFC-141b (CCl_2FCH_3) which is in the ethane series and HCFC 225 which is in the propane series Actually HCFC-225 is a mixture of isomers HCFC 225ca ($CF_3CF_2CHCl_2$) and 225cb ($CClF_2CF_2CHClF$) The physical properties of these HCFCs are compared to the properties of CFC 113 in Table 5 The table shows that the boiling temperature of HCFC 141b is lower than that of CFC 113 However the heat of vaporization of HCFC 141b is greater so that the evaporation rates for both compounds are similar The table also shows that the boiling tempera tures of HCFC 225ca and cb are higher than that of CFC 113 and that all three compounds have similar heats of vaporization The surface tension density and Kauri Butanol values of the HCFCs are comparable to those of CFC 113 which indicates that similar cleaning performance is expected

Both HCFC 141b and 225ca -cb can be used in pure form or as azeotropes with methanol HCFC 225ca cb also can be used in azeotrope form with ethanol Azeotropes are liquid mixtures that produce a vapor of the same chemical composition Boiling temperatures for azeotropes are compared with boiling temperatures for CFC 113 in Table 5 Alcohols provide improved solvency for ionic and polar contaminants such as solder flux Nitromethane sometimes is added in small amounts to stabilize the alcohol component

Operating Features

It is important to realize that HCFCs are being devel oped for interim use only The London Amendments to the Montreal Protocol call for a ban of HCFCs between 2020 and 2040 The main reason for choosing this technology is to enable an existing CFC-113 vapor degreasing system to continue in use until a long term alternative is found The long-term alternative could be a completely enclosed vapor degreaser or a non HCFC technology discussed in this *Guide*

HCFC-141b currently costs approximately $3 00 to $3 50/lb or about $30 00 to $35 00/gallon Because production of HCFC 225 mixtures is under develop ment prices were not available

Application

HCFCs had no commercial solvent use prior to pas sage of the Clean Air Act Amendments (CAAA) of 1990 HCFCs now are used in vapor degreasers for the same applications as CFC-113 HCFCs have similar performance characteristics to CFC 113 However like the CFCs the HCFCs will be phased out of use It is unknown at this time whether regulations will permit use of HCFCs until at least the year 2020 as expected

Benefits

HCFCs provide a short term solution to choosing an alternative solvent and allow use of existing equipment

Limitations

Health and Safety Because HCFCs have lower boiling points than CFC 113 HCFC solvent vapors may be lost too quickly in older degreasers and these vapors

181

may be a health risk Some emission control features may have to be added such as extending freeboard height adding secondary condensers or completely enclosing the system (*Guide to Cleaner Technologies Cleaning and Degreasing Process Changes* 1993)

Toxicity testing of HCFC has been ongoing by the industry consortium — Program for Alternative Fluoro carbon Toxicity Testing (PAFT) Results of their findings were recently reported (Finegan and Rusch 1993) and are summarized below

The toxicology program studied the effects of HCFC-141b on rats showing that at an exposure level of 20 000 ppm, an increase in cholesterol reduced fertility and reduced body weight were the predominate effects No effects were seen with pup viability or survival

Metabolism studies showed that HCFC 141b has a low activity rate and can be metabolized to 11-dichloro-1-fluoroethanol HCFC 141b in the gas phase was active in the CHO cell chromosome aberration assay up to exposure levels of 10% but inactive in all the other assays

The chronic inhalation toxicity study at exposure levels of up to 20 000 ppm found no effects on survival, hematology clinical observations serum chemistries urinalysis or organ weights An increased incidence of benign Leydig cell tumors and related hyperplasia in male rats in the mid- and high-level exposure groups did not result in any life shortening effects as survival rates were excellent in all groups

The program showed HCFC-225ca to have slight liver effects at 650 ppm whereas all levels of exposure (50 500 5 000 ppm) in the 4-week inhalation study showed hepatotoxic effects and peroxisome induction At the 500 and 5 000 ppm levels there was indication of cytochrome P450 induction A 14-day comparative effect study in rats hamsters and guinea pigs run at 5 50 and 500 ppm showed minimal effects in rodents at 5 ppm consisting of hepatotoxicity, induction of peroxisome and cytochrome P450 activity Guinea pigs showed minimal effects at 500 ppm

A marmoset study at an exposure level of 1 000 ppm is showing similar signs of peroxisome induction marked reduction in triglycerides a reduction in cholesterol and discolored livers The cause of the one death is unknown HCFC 225ca was not active in the chromo some aberration assay

The same program conducted on HCFC 225cb using levels 10 times higher than those for the HCFC 225ca study showed results for the most part parallel to those for HCFC 225ca The no-adverse effect level was 500 ppm for rodents and 5 000 ppm for guinea pigs Pharmacokinetics work indicated a blood half life of 11 minutes

The marmoset study indicates a mild reduction in triglycerides at its exposure level of 5 000 ppm but so far no evidence of peroxisome induction or induction of cytochrome P450 The genetics program and results are similar to those for HCFC 225ca

HCFCs have no flash point and are nonflammable Like TCA however HCFC 141b will burn if the oxygen content is sufficiently high

Compatibility with Materials HCFC cleaners are compatible with most metals and ceramics and with many polymers They are incompatible with acrylic styrene and ABS plastic

HCFCs probably have been developed to their full extent Except for HCFC-141b and HCFC-225 all other HCFCs that are suitable as cleaning and degreasing solvents have turned out to be toxic

References

Basu R S P B Logsdon, and E M Kenny McDermott 1991 "Precision Cleaning in Aerospace Industry with HCFC Based Blend—A Status Up date In *Proceedings of the 1991 International CFC and Halon Alternatives Conference* The Alliance for Responsible CFC Policy Baltimore Maryland pp 188 199

Finegan C E and G M Rusch 1993 'Update Program for Alternative Fluorocarbon Toxicity Testing In *Proceedings of the 1993 International CFC and Halon Alternatives Conference* The Alliance for Responsible CFC Policy Washington D C pp 895 904

Kitamura K K Ohnishi S Morikawa and M Yamabe 1991 'HCFC 225 as a Promising Substitute for Drop-in Replacement of CFC 113 In *Proceedings of the 1991 International CFC and Halon Alterna tives Conference* The Alliance for Responsible CFC Policy, Baltimore Maryland pp 209-215

U S Environmental Protection Agency 1991a *Elimi nating CFC 113 and Methyl Chloroform in Precision Cleaning Operations* EPA/401/1 91/018 Prepared by the Industrial Cooperative for Ozone Layer Protection Technical Committee and U S EPA Washington D C

182

U S Environmental Protection Agency 1991b *Aqueous and Semi-Aqueous Alternatives for CFC 113 and Methyl Chloroform in Metal Cleaning* EPA/400/1 91/019 Washington D C

Miscellaneous Organic Solvents

Pollution Prevention Benefits

The miscellaneous organic solvents do not contain halogens therefore they do not contribute to ozone depletion However all of these compounds are VOCs and evaporate readily thereby contributing to smog formation The solvents discussed in this section normally are used in small quantities for niche applications

How Do They Work?

This group covers a wide range of solvents that may be beneficial as a replacement technology particularly on a small scale, such as bench-top or spot cleaning Types of miscellaneous organic solvents that are commonly used are shown in Table 6

Both alcohols and ketones are useful in certain drying operations

Alcohols are polar solvents and have good solubility for a wide range of inorganic and organic soils The lighter alcohols are soluble in water and may be useful in drying operations

Ketones have good solvent properties for many polymers and adhesives Lighter ketones such as acetone are soluble in water and may be useful for certain rapid drying operations Heavier ketones such as acetophenone are nearly insoluble in water Ketones generally evaporate completely without leaving a residue Some ketones such as methyl ethyl ketone (MEK) and methyl isobutyl ketone (MIBK) once were widely used However they now are considered HAPs and thus are not favorable solvent substitutes

Esters and ethers also have good solvent properties Low-molecular-weight compounds dry readily without leaving a residue

Table 6 Properties of Miscellaneous Organic Solvents

Compound	Molecular Weight	Boiling Point (°C)	Melting Point (°C)	Density g/cm³	Solubility in Water
Alcohols					
ethanol	46 07	78 5	117	0 789	Soluble
n-propanol	60 11	97 4	127	0 803	Soluble
isopropanol	60 11	82 4	90	0 786	Soluble
n butyl alcohol	74 12	117	89	0 81	9%
furfuryl alcohol	98 10	171	14	1 130	Soluble
benzyl alcohol	108 15	205 3	15	1 042	4%
cyclohexanol	100 2	161	25	0 96	4%
Ketones					
acetone	58 08	56 2	95	0 790	Soluble
acetophenone	120 16	202 6	20 5	1 028	Slight
Esters					
n butyl acetate	116 16	125	77	0 883	<1%
(L)ethyl lactate	118 13	154	NA	1 031	Soluble
Ether					
anisole	108 15	155	37 5	0 996	Insoluble
Linear Methyl Siloxanes					
2 Si chain	162	100	68	0 76	Insoluble
3 Si chain	236	149	86	0 82	Insoluble
4 Si chain	310	192	76	0 85	Insoluble
Vegetable Oils					
peanut oil	—	443 (ignition temperature)	5	0 917 to 0 921	Insoluble
soybean oil	—	445 (ignition temperature)	10	0 916 to 0 922	Insoluble

183

A new class of organic solvents are the volatile methyl siloxanes Their molecular structure is either linear or cyclic The linear type which was recently introduced commercially (Burow 1993) has the general formula $(CH_3)_3SiO-[SiO(CH_3)_2]_n-Si(CH_3)_3$ where $0 \leq n \leq 4$ Thus $n=0$ corresponds to a 2 Si unit chain $n=1$ corresponds to a 3 Si unit chain and so on The linear methyl siloxanes are nonpolar and are most effective in removing nonpolar and nonionic contaminants The most volatile methyl siloxane ($n=0$) can function as a drying agent

Vegetable oils are finding use in removing printing inks They also seem to be compatible with elastomers (Environmental Program Office City of Irvine 1991) Vegetable oils contain triglycerides of fatty acids typically oleic linoleic linolenic palmitic and stearic fatty acids Unsaponifiable matter usually is low (<1%)

Operating Features

These cleaners, which are commercially available probably will find their greatest use in small batch operations rather than as substitute solvents in large-scale processes

Approximate costs when solvents are purchased in bulk quantities are as follows

isopropyl alcohol $ 0 50/lb or $3 30/gal
n-propyl alcohol $ 0 70/lb or $4 70/gal
acetone $ 0 50/lb or $3 30/gal

Application

Most of these cleaners have been used for a long time as general purpose solvents and their solvent proper ties are well known They are most often used cold in a small immersion tank with mild agitation or ultrasonics In addition fully enclosed spray washers are available for alcohol cleaning

Benefits

Most of these solvents are well developed and some have been used as cleaners for a century or more Many of them have reached their full potential for development The lighter alcohols and ketones have high evaporation rates and therefore fast drying times The more volatile solvents are best suited for spot cleaning where rapid evaporation is desired

Ethyl and isopropyl alcohols are commonly used in spot cleaning and touch up applications Because they are slightly polar they tend to be good general purpose solvents for nonpolar hydrocarbons polar organic compounds and even ionic compounds Ethyl and isopropyl alcohols are fully miscible in water

Benzyl alcohol is a solvent for gelatin casein (when heated) cellulose acetate and shellac (Budavari 1989) and is used as a general paint softener (when heated) The good solvent properties of benzyl alcohol can be enhanced by heating its flash point is 101°C or 213°F (closed cup) Mixtures composed of 90% benzyl alcohol and 10% benzoic acid also are used for solvent cleaning applications Pure benzyl alcohol is 4% soluble in water but is miscible in lighter alcohols and with ether

Furfuryl alcohol forms a miscible but unstable solution in water It is used as a general cleaning solvent and paint softener Furfuryl alcohol is soluble in water and is miscible in lighter alcohols and in ether The solvent properties of furfuryl alcohol can be enhanced by moderate heating its flash point is 75°C or 167°F (closed cup)

N-butyl alcohol is a solvent for fats waxes, resins shellac varnish and gums It is 9% soluble in water at 25°C, but forms an azeotrope with water (63% *n*-butyl alcohol/37% water) that boils at 92°C *N*-butyl alcohol is miscible in lighter alcohols ether and many other organic substances

N-butyl acetate is a solvent used in lacquer production It is less than 1% soluble in water at 25°C The solvent activity of *n*-butyl acetate is enhanced by mixing with *n* butyl alcohol A mixture of 80% *n*-butyl acetate and 20% *n*-butyl alcohol is used to dissolve oil, fats, waxes metallic resinates and many synthetic resins such as vinyl polystyrene and acrylates Also the mixture dissolves less highly polymerized alkyd resins and shellac

Ethyl lactate is another ester that has useful solvent properties The use of ethyl lactate is relatively new to cleaning and degreasing Recently it has been shown to have good solubility for skin oils cutting fluids coolants mold release compounds and marking inks (Hill and Carter 1993) Ethyl lactate has a flash point of 47°C or 117°F (closed cup)

Acetone is a solvent for fats oils waxes resins rubber some plastics lacquers varnishes and rubber cements It is completely miscible in water and in most organic solvents Acetophenone is only slightly soluble in water but is miscible in alcohol ether and other organic substances

Limited information is available on the use of anisole as a cleaning solvent Use of a mixture of equal parts of anisole and ethanol with 10% sodium ethoxide has been reported for cleaning and paint removal Anisole is used primarily in perfumery and in organic synthe ses Anisole is insoluble in water but is soluble in

184

alcohol and ether Toxicity test data show its LD_{50} orally in rats) to be 3700 mg/kg (Budavari 1989)

Volatile methyl siloxanes have been found to remove contaminants in precision metal working optics and electronics processing (Burow 1993) They remove cutting fluids greases and silicone fluids They have low odor and evaporate in the range of butyl acetate without leaving a residue They can be used in cleaning equipment designed for use with isopropyl alcohol

Limitations

Limitations of some of these cleaners is that some have vapor pressures that are too high to be used in standard process equipment whereas others evapo rate too slowly to be used without including a rinse and/ or dry process

Health and Safety Most of the organic solvents men tioned in Table 6 have low flash points and present a fire hazard Inhalation of these solvents can present a health hazard It is not known whether the more volatile solvents will be able to meet VOC emission restrictions in highly regulated areas of the country Users should consult MSDS literature for safe handling practices

The lighter alcohols such as ethanol and propanol have flash points below room temperature so they are potential fire hazards unless precautions are taken to mitigate the possibility of igniting their vapors *N*-butyl alcohol has a flash point of 36 to 38°C or 97 to 100°F (closed cup) which is considered flammable

N-butyl alcohol may cause irritation of mucous mem branes dermatitis headache dizziness and drowsi ness (Budavari 1989) Furfuryl alcohol is relatively toxic (OSHA permissible exposure limit is 40 mg/m^3) Also furfuryl alcohol is an irritant to eyes and skin exposure to its vapor should be avoided

N butyl acetate is irritating to eyes and skin and it may cause conjunctivitis Also it is a narcotic in high con centrations (Budavari 1989) *N* butyl acetate has a flash point of 22°C or 72°F (closed cup) so it is a potential fire hazard unless precautions are taken to prevent igniting its vapor

Acetone is quite volatile evaporates quickly and is a highly flammable liquid Its flash point is 18°C or 0°F (closed cup) making it a fire safety hazard unless strict fire prevention measures are taken Acetophenone has a flash point of 105°C or 221°F (closed cup)

Inhalation of acetone may cause headache fatigue excitement bronchial irritation and in large amounts narcosis (Budavari 1989) Prolonged breathing of acetone may cause erythema

The flash points of the volatile methyl siloxanes are in the flammable and combustible ranges 1°C (30°F) for n=0 34°C (94°F) for n=1 and 57°C (135°F) for n=2 compounds

The volatile methyl siloxanes are reported to have low oral and dermal toxicities and are non irritating to the skin and respiratory tract (Burow 1993) They are mild eye irritants

Compatibility with Materials In general solvents are safe to use with most metals but some can cause swelling and cracking of polymers and elastomers Ketones also are incompatible with many structural polymers Esters on the other hand seem compatible with most polymers

Ethyl lactate hydrolyzes to form lactic acid upon exposure to water including contact with moist air The acidity could have a negative impact on cleaning metal parts In one set of tests, a sample of lactic acid aged 6 months at room temperature without nitrogen purge showed 0 10% acidity by titration (Hill and Carter 1993) Therefore, precautions are needed to minimize the contact of lactic acid with moist air

References

Budavari S (Ed) 1989 *The Merck Index An Encyclo pedia of Chemicals Drugs and Biologicals* Merck & Co Inc Rahway New Jersey

Burow R F 1993 Volatile Methyl Siloxanes (VMS) as Replacements for CFCs and Methyl Chloroform in Precision and Electronics Cleaning In *Proceed ings of the 1993 International CFC and Halon Alternatives Conference* The Alliance for Respon sible CFC Policy Washington D C pp 654 661

Environmental Program Office City of Irvine California 1991 Brochure

Hill E A and K D Carter Jr 1993 An Alternative to Chlorinated Solvents for Cleaning Metal Parts In *Proceedings of the 1993 International CFC and Halon Alternatives Conference* The Alliance for Responsible CFC Policy Washington D C pp 465 471

U S Environmental Protection Agency 1991a *Elimi nating CFC 113 and Methyl Chloroform in Precision Cleaning Operations* EPA/401/1 91/018 Prepared by the Industrial Cooperative for Ozone Layer Protection Technical Committee and U S EPA Washington D C

185

U S Environmental Protection Agency 1991b *Aqueous and Semi Aqueous Alternatives for CFC 113 and Methyl Chloroform in Metal Cleaning* EPA/400/1-91/019 Washington D C

Supercritical Fluids

Pollution Prevention Benefits

The main advantage of using carbon dioxide (CO_2) as a supercritical fluid (SCF) is that CO_2 is nonpolluting CO_2 is derived from the atmosphere and is not created for use as a solvent Furthermore the small quantity of CO_2 released would have an insignificant effect on global warming On the other hand cosolvents which may be used to improve the solvent power of CO_2, may have pollution potential and should be investigated before use Energy is required to operate the pumps and temperature control equipment that are needed in supercritical cleaning equipment

How Do They Work?

CO_2 compressed above its critical pressure (73 7 bars or 1077 psi) becomes a critical fluid, and if also heated above its critical temperature (31 1°C or 88 0°F) it becomes a supercritical fluid Typically however the term *supercritical* (SC) is applied to any region in phase space that is above either the critical temperature (T_c) or the critical pressure (P_c) Critical and supercritical fluids are excellent solvents for dissolving many medium-molecular-weight nonpolar or slightly polar organic compounds

SCFs have more solvent power the denser they are

Figure 1 is a phase diagram for CO_2 that shows its stable phase boundaries including the supercritical region The solvent power of supercritical fluids increases as the density of the fluid increases The density of SC CO_2 can be made nearly liquid like at moderate pressures The shaded region in Figure 2 shows the pressure-temperature (P T) region that is most useful for cleaning Fluid densities range from approximately 0 2 to 0 8 g/cm³ Figure 2 shows how the fluid density may be varied to achieve a broad range of solvating ability It may be said that supercritical fluids can be 'tailored to achieve a desired solvent capability

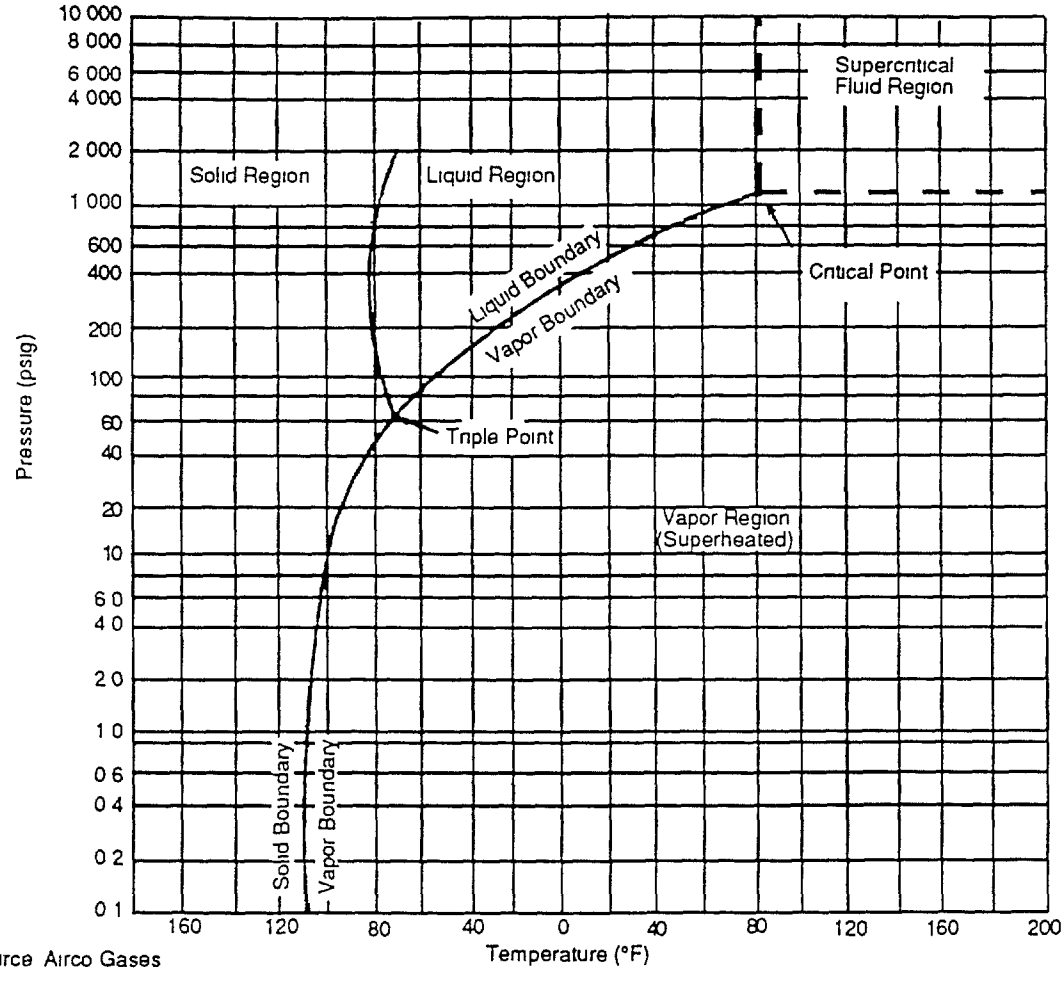

Source Airco Gases

Figure 1 Phase diagram for pure CO_2

186

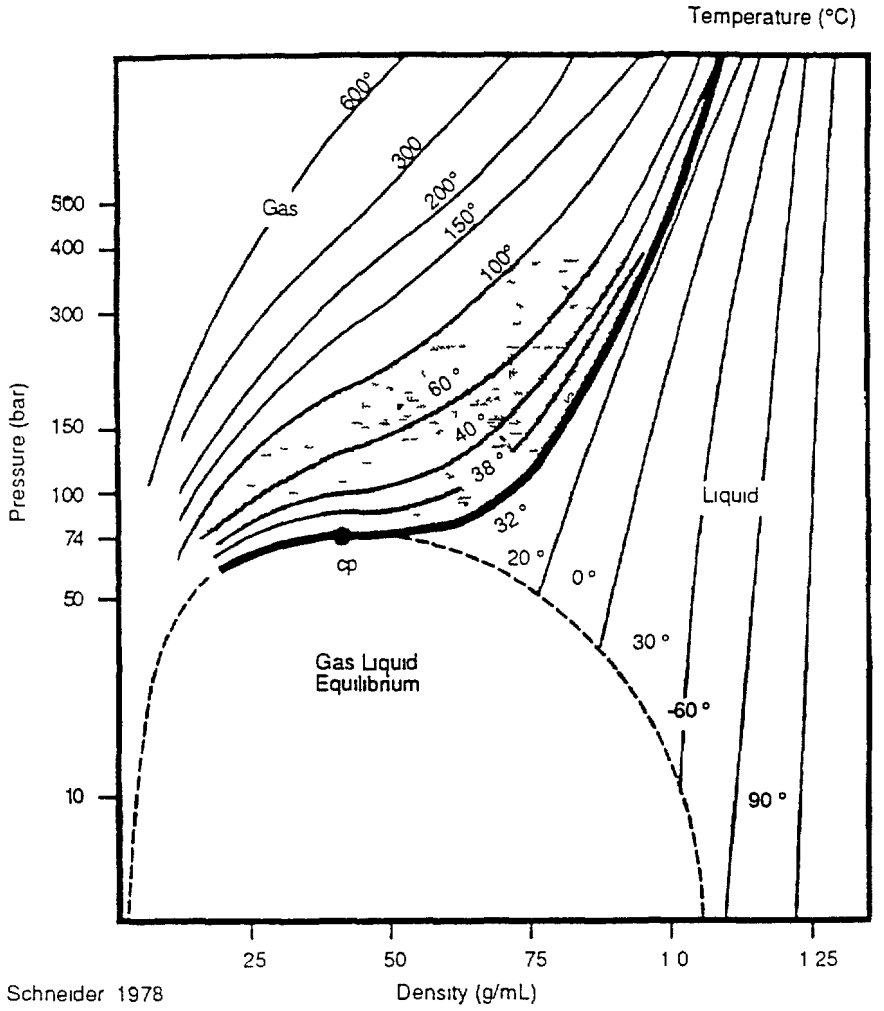

Source Schneider 1978

Figure 2 Pressure density diagram for pure CO_2 temperature in °C, cp = critical point

Other factors that affect the cleaning abilities of SCFs are their gas like low viscosity and high diffusivity which enable them to penetrate into small confined spaces such as cracks and blind holes In the *P T* region of interest (shaded area in Figure 2) viscosities are about twice those of the gas at atmospheric pressure and at the same temperature whereas diffusivities are about 30 times smaller (Lira 1988) However once CO_2 molecules have solvated contaminant molecules the kinematic properties of the fluid may change especially near the SCF/contaminant interface With this change the solvated contaminant species may be difficult to remove In practice some sort of mixing mechanism or flow control usually is built into the extraction vessel

A typical SCF cleaning system consists of the following components

CO_2 source (compressed gas cylinder)
Chiller to condense CO_2 gas to liquid
Pressure pump to elevate CO_2 liquid pressure
Hot water bath to elevate line temperature to that of the cleaning chamber
Cleaning chamber where parts are cleaned
Pressure reduction valve at fluid exit port
Separator vessel to collect contaminants
Air flow meter to monitor CO_2 usage

Supercritical CO_2 dissolves and carries away soluble contaminants

Samples to be cleaned are placed in the cleaning chamber, which also is called an *extraction vessel* or *autoclave* The process is started by drawing CO_2 from the gas cylinder then pressurizing and heating the CO_2 to the same *P-T* conditions as in the extraction vessel Heat tape may be wound around all critical fluid transfer lines and temperatures should be monitored at various points by thermocouples SC CO_2 flows through the cleaning chamber where it dissolves and carries away soluble substances After extraction the

187

CO_2 and dissolved contaminants pass through a pressure reduction valve where pressure is dropped below P_c and then they enter the separator vessel As CO_2 returns to the gaseous state its solvent power decreases substantially and contaminants drop out of solution and remain in the separator vessel The CO_2 continues to flow out of the separator vessel through a flow meter and to the atmosphere

As a rule of thumb to achieve good solvency at moderate temperature, the fluid pressure should be 2 or more times the critical pressure of the fluid Typical operating conditions for SCF cleaning equipment are listed in Table 7

Table 7 Typical Operating Conditions for Supercritical CO_2 Cleaning

Parameter	Scientific Units	Engineering Units
Pressure (gauge)	100 300 bars	1 450 4 350 psi
Temperature	40 85°C	100 185°F
SC CO_2 Density	0 5 0 8 g/cm³	30 50 lb/ft³
SC CO_2 Flow Rate	1 5 kg/hr	2 11 lb/hr
Time	0 5 3 hours	0 5 3 hours

Operating Features

SCF cleaning exploits the marked improvement of the solvent power of CO_2 or other substances after they undergo a phase transition from a gas or liquid phase to become supercritical fluids Supercritical CO_2 has been used very successfully to remove organic soils of moderate molecular weight and low polarity Supercritical CO_2 does not give good results for soils that are ionic or polar in nature, such as fingerprints

SCF cleaning is most useful for precision cleaning operations

SCF cleaning is probably best reserved for removing small amounts of soil from parts that require a high degree of cleanliness For example precision cleaning operations have been performed successfully on the following devices gyroscope parts accelerometers thermal switches nuclear valve seals electro mechanical assemblies, polymeric containers optical components porous metals and ceramics (Gallagher and Krukonis, 1991 Woodwell, 1993) The cleaning technology is available commercially

Capital costs for installing SCF equipment are high at least $100K for small capacity equipment The cost of the autoclave increases considerably with size Small vessels may be only 1 liter in volume and are relatively inexpensive Large vessels—30 liters for example—are many times more expensive for the same pressure rating If large parts are to be cleaned it may be more cost effective to purchase lower pressure rated equipment and operate the SCF system for longer times at lower pressure The expense of supplying CO_2 to the system however is quite small about 7 cents per pound

Application

Supercritical fluids have been used in organic chemical analysis equipment and in the food and flavor industries SCFs have been used to clean and degrease precision parts in the defense industry since the mid 1980s

Supercritical fluids have been used to remove machine coolants on aluminum and stainless steel substrates (Salerno, 1990) The cleaning process performed at 35°C 138 bars for 15 to 30 minutes yielded a residual 0 65% of the coolants on the substrates The solubility of the coolants ranged from about 1 to 5% under these conditions

Benefits

Low viscosity and high diffusivity permit SCFs to clean within very small cracks and pore spaces The solvent power of SCFs is pressure-dependent making it possible to extract different soils selectively and precipitate them into collection vessels for analysis

Limitations

Health and Safety The only major safety concern is the danger of a pressure vessel or line rupture However, the pressures used in SCF cleaning are well within the strength limits of most standard autoclave equipment

Compatibility with Materials SCFs are compatible with metals ceramics and polymers such as Teflon™ high density polyethylene epoxies and polyimides SCFs cause swelling in acrylates styrene polymers neoprene polycarbonate and urethanes (Gallagher and Krukonis 1991) Components that are sensitive to high pressures and temperatures should not be cleaned by SCF methods Process developments in the future probably will make SCF cleaning more aggressive toward removing cross linked polymeric materials and displacing particulates

Cleaning Efficacy The major deficiencies of SCF cleaning are that SCFs are not effective in removing inorganic and polar organic soils nor do they remove loose scale or other particulates For these reasons the soil must be well characterized to ensure its solubility in SCF before an investment is made in this technology

188

It also is not known whether the process can remove a complex mixture of contaminants Therefore a detailed analysis of the contaminants must be done before the likelihood of success can be determined

References

Airco Gases N D 474 Mountain Avenue Murray Hill, New Jersey 07947

Gallagher P M and V J Krukonis 1991 "Precision Parts Cleaning with Supercritical Carbon Dioxide *Proceedings of the 1991 International CFC and Halon Alternatives Conference* The Alliance for Responsible CFC Policy Baltimore Maryland pp 262 271

Lira C T 1988 'Physical Chemistry of Supercritical Fluids A Tutorial In B A Charpentier and M R Sevenants (Eds) *Supercritical Fluid Extraction and Chromatography* American Chemical Society, Symposium Series No 366 pp 1-25

Salerno R F 1990 High Pressure Supercritical Carbon Dioxide Efficiency in Removing Hydrocarbon Machine Coolants from Metal Coupons and Components Parts In *Solvent Substitution — A Proceedings/Compendium of Papers* DE-AC07-76ID01570 U S Department of Energy Office of Technology Development Environmental Restoration and Waste Management and U S Air Force Engineering and Services Center pp 101 110

Schneider G M 1978 'Physicochemical Principles of Extraction with Supercritical Gases *Angew Chem Int Ed Engl* 17 716 727

U S Environmental Protection Agency 1991 *Eliminating CFC 113 and Methyl Chloroform in Precision Cleaning Operations* EPA/401/1 91/018 Prepared by the Industrial Cooperative for Ozone Layer Protection Technical Committee and U S EPA Washington D C

Woodwell R 1993 Personal communication from Robert Woodwell of Honeywell Space Systems Group to Bruce Sass of Battelle September 21

Carbon Dioxide Snow

Pollution Prevention Benefits

Chilled CO_2 is a nontoxic inert gas that replaces solvent use to eliminate ozone depleting substances Because the CO_2 is recycled there is no need for disposal nor is any wastewater produced It generates no hazardous emissions

How Does It Work?

Gaseous or liquid CO_2 is drawn from a room temperature gas cylinder or high pressure dewar and expanded through a nozzle to produce fine CO_2 particles and CO_2 gas These particles are dry ice *snowflakes* and are propelled by the gas stream

The CO_2 gas or liquid is expanded through a special nozzle to form a jet For example when liquid CO_2 at 750 psi is throttled through a nozzle and expanded into a volume at 1 atm pressure it undergoes a phase change to the solid state The shape and size of the snowflakes depend on the configuration of the nozzle and the conditions in which the flake formed in the gas stream The snowflakes can be individual crystals or collective groupings of crystallites

Cleaning action is performed when the snow particles impact a contaminated surface dislodge adherent contaminant particles, and carry them away in the gas stream The process is effective in removing very small (submicron) particles where fluid drag normally restricts the performance of liquid phase cleaning The CO_2 snow cleaning process also is believed to attach hydrocarbon film by dissolving hydrocarbon molecules in a temporal liquid CO_2 phase at the film substrate interface (Whitlock, 1989) The dissolved film is then carried away by subsequent flow of snow and gas

Operating Features

A complete system includes a CO_2 purifier a pneumatic actuated head and a microprocessor based timing circuit Several models of manual spray booths are available that provide a nitrogen purged heated and monitored environment for CO_2 spraying that cost $10K to $15K One commercial purifier is available in a 17 x 14 x 24 1/2 inch stainless steel cabinet It weighs 135 lb and requires an energy supply of 6 A 115 VAC and 60 Hz

Another commercially available purifier is capable of purifying CO_2 to a water content of less than 20 ppb by weight In laboratory analyses of CO_2 before and after purification the hydrocarbon content of 1800 ppb by weight was reduced to 3 ppb hydrocarbon CO_2 with 140 ppb by weight halocarbons was purified to 1 ppb wt halocarbons The purifier works on a 25% duty cycle allowing use for 1 minute to every 3 minutes of recovery time The snow gun consumes 0 6 lb of CO_2 per minute when used continuously

If the dust or dirt particles removed by CO_2 snow cleaning are a hazard they can be collected by an electrically charged curtain (Hoenig 1990)

189

Application

CO_2 snow gently removes particles smaller than 10 microns in diameter down to 0 1 micron that are difficult to remove using high velocity liquid nitrogen It is used to remove light oils and fingerprints from mirrors lenses and other delicate surfaces and from precision assemblies without scratching the surface

Uses of CO_2 snow range from hybrid circuitry to the optics industry

CO_2 snow can clean hybrid circuitry and integrated circuits without disturbing the bonding wires This unique ability cannot be duplicated by any other cleaning mechanism In the disc drive industry CO_2 snow is used to remove particles from discs without damage to the operation (Hoenig 1990)

The process is used to remove paste fluxes in soldering If the grease cannot be removed with CO_2 snow alone a combination of CO_2 snow and ethyl alcohol is effective followed by CO_2 snow alone to remove the impurities from the alcohol (Hoenig 1990)

CO_2 is used to remove hydrocarbons and silicone grease stains from silicon wafers Wafers artificially contaminated with a finger print a nose print and a thin silicone grease film were found to have surface hydrocarbon levels 25 to 30% lower after CO_2 snow cleaning than the original wafer surfaces (Sherman and Whitlock 1990)

CO_2 snow cleaning is extremely effective

Layden and Wadlow (1990) report a reduction of zinc orthosilicate concentration on a silicon wafer of more than 99 9% after cleaning by high-velocity CO_2 snow Whitlock (1989) reports removal of greater than 99 9% for particles ranging from 0 1 to 0 5 micron diameter

In the field of optics CO_2 snow is used to clean the light scattering particles and debris from the mirrors of the world s largest and most expensive telescopes

CO_2 snow also is used to clean surfaces exposed to contaminants in air prior to surface analysis The process was found to work better than solvents to clean vacuum components Because the aerosol could penetrate narrow spaces no disassembly was required greatly shortening the time required for cleaning Furthermore CO_2 cleaning is effective on some plastic parts that cannot be cleaned by solvents (Layden and Wadlow 1990)

Benefits

Some of the major beneficial aspects of CO_2 snow include

- CO_2 snow performs ultrapure cleaning of light oils down to submicron size on the most delicate sensitive materials ranging from bonding wires to precision mirrors in telescopes
- The CO_2 snow crystals generated by the snow gun are extremely gentle
- The CO_2 snowflakes are adjustable to a wide range of size and intensity
- The process does not create thermal shock is nonflammable and nontoxic and causes no apparent chemical reactions
- Cleaning by CO_2 snow is noncorrosive and leaves no residue
- CO_2 snow does not crack glass or other ceram ics
- No media separation system is needed nor is there a media disposal cost
- CO_2 snow can penetrate the nonturbulent area to dislodge contaminants and can be used on components without disassembly that otherwise must be disassembled because the aerosol penetrates narrow spaces

Limitations

Potential hazards and limitations of CO_2 snow include

- Heavier oils alone or mixed with light oils may require chemical precleaning and/or heating to be completely removed
- The CO_2 must be purified because of its ten dency to dissolve contaminants from the walls of tanks in which it is stored Purification equipment adds expense to the CO_2 snow cleaning system
- When surfaces are excessively chilled by long dwell times airborne impurities may condense and settle on the clean surface (Zito 1990)
- CO_2 snow has low Mohs hardness and will not scratch most metals and glasses However hard particulates such as sand that may be present on a surface potentially could cause scratching when they are carried by the gas stream

References

Hoenig S A 1990 'Dry Ice Snow as a Cleaning Media for Hybrids and Integrated Circuits *Hybrid Circuit Technology* December p 34

Layden L and D Wadlow 1990 High Velocity Carbon Dioxide Snow for Cleaning Vacuum System Surfaces *Journal of Vacuum Science Technology A8*(5) 3881 3883

190

Sherman R and W Whitlock 1990 "The Removal of Hydrocarbons and Silicone Grease Stains from Silicon Wafers *Journal of Vacuum Science Technology B8*(3) 563 567

Whitlock W 1989 "Dry Surface Cleaning with CO_2 Snow Paper presented at the 20th Annual Meeting of the Fine Particle Society Boston Massachusetts August 22

Zito R R 1990 "Cleaning Large Optics with CO_2 Snow *SPIE Advanced Technology Optical Telescopes IV 1236* 952-971

191

SECTION 3
EMERGING TECHNOLOGIES

How to Use The Summary Tables

Two emerging alternatives to chlorinated solvents for cleaning and degreasing are evaluated in this section

- Catalytic wet oxidation cleaning
- Absorbent media cleaning

Tables 8 and 9 summarize descriptive and operational aspects of these technologies The tables contain evaluations or annotations describing each emerging cleaner technology and give a compact indication of the range of technologies that may be applicable to specific situations Readers are invited to refer to the summary tables throughout this discussion to compare and contrast technologies

Descriptive Aspects

Table 8 describes each emerging cleaner technology It lists the **Pollution Prevention Benefits, Application, Benefits,** and **Limitations** of each emerging cleaner technology

Operational Aspects

Table 9 shows the key operating characteristics for the emerging technologies The technical qualitative rankings are estimated based on the descriptions and data in the literature

> *The summary tables will help identify possible candidate cleaner technologies*

In Table 8, **Process Complexity** is qualitatively ranked as 'high "medium or low based on such factors as the number of process steps involved and the number of material transfers needed **Process Complexity** is an indication of how easily the technology can be integrated into existing plant operations A large number of process steps or input chemicals, or multiple operations with complex sequencing are examples of characteristics that would lead to a high complexity rating

The **Required Skill Level** of equipment operators also is ranked as high, 'medium or low **Required Skill Level** is an indication of the level of sophistication and training required by staff to operate the new technology A technology that requires the operator to adjust critical parameters would be rated as having a high skill requirement In some cases, the operator may be insulated from the process by complex control equip ment In such cases the operator skill level is low but the maintenance skill level is high

Table 9 also lists the **Waste Products and Emissions** from the emerging cleaner technologies It indicates tradeoffs in potential pollutants the waste reduction potential of each and compatibility with existing waste recycling or treatment operations at the plant

> *Use the information in the text, from the references and from industry and trade groups to get more detail on the best candidates*

The **Capital Cost** column provides a preliminary measure of process economics It is a qualitative estimate of the initial cost impact of the engineering procurement and installation of the process and support equipment compared to continuing to use chlorinated solvents Due to the diversity of cost data and the wide variation in plant needs and conditions it is not possible to give specific cost comparisons Cost analysis must be plant specific to adequately address factors such as the type and age of existing equipment space availability throughput product type customer specifications and cost of capital Where possible sources of cost data are referenced in the discussions of each cleaner technology

The **Energy Use** column provides data on energy use for a specific technology

Operations Needed After Cleaning summarizes additional inspection hand cleaning or other opera tions that may be needed after use of the clean alterna tive solvent These are noted to indicate special

192

Table 8 Emerging Technologies for Alternatives to Chlorinated Solvents for Cleaning and Degreasing Descriptive Aspects

Technology Type	Pollution Prevention Benefits	Application	Benefits	Limitations
Catalytic Wet Oxidation Cleaning	Only CO_2 and water produced	Oxidizable organic soils	Can be used to clean wet parts	May damage/corrode some substrates
Absorbent Media Cleaning	No water involved in cleaning Replaces solvents Media biodegradable and/or can be recycled	Degrease low alloy steel prior to heat treatment Clean fingerprints from mylar Sop up oil Degrease aluminum and other sensitive parts	Wipes are made of recyclable potentially reclaimable materials Wipes can be incinerated Starch applicators can be reused indefinitely Sewered starch is useful as a feedstock for municipal processing plants Spent wipers and starch have BTU value	Plant air or a shop vacuum needed in most cases Not useful on complex surfaces or detailed parts

Table 9 Emerging Technologies for Alternatives to Chlorinated Solvents for Cleaning and Degreasing Operational Aspects

Technology Type	Process Complexity	Required Skill Level	Waste Products and Emissions	Capital Cost	Energy Use	Operations Needed After Cleaning	References
Catalytic Wet Oxidation Cleaning	Medium	Medium	CO_2 water	No commercial system to date	Low	Drying to remove water	Dhooge 1990
Absorbent Media Cleaning	Low	Low	Spent media	Low material cost and low operating cost	Low for air filtration or vacuum system	Sweeping or vacuuming may be required	Doscher 1991 Doscher et al 1990

193

considerations in the application of the cleaner technology

The last column in Table 9 cites **References** to publications that will provide further information for each emerging technology The citations are given as full references at the end of the respective Emerging Technology sections

The text further describes pollution prevention benefits application, product benefits, and limitations known for each technology More highly developed technologies are summarized in Section 2, **Available Technologies**

Catalytic Wet Oxidation Cleaning

Catalytic wet oxidation consumes little energy

Catalytic wet oxidation is a proposed method for chemically oxidizing, or "burning organic contaminants within an aqueous medium Oxygen rich air pumped into an aqueous solution can be used to gasify organics that adhere to a substrate thereby converting them to more easily degradable chemical intermediates The concept was developed for the destruction of organic wastes (Dhooge 1990) but may be applicable to substrate cleaning as well In principle, the final waste products are CO_2 and water The process consumes little energy

Oxidation in the presence of water is the source of the term *wet oxidation* This technology can be used to treat waste streams high in organic matter Wet oxidation works most effectively on materials that contain substantial amounts of water and cannot be easily combusted under conventional burning conditions

A catalyst—typically iron (III)/iron (II) salts that dissolve in solution—and one of several homogeneous (aqueous phase) cocatalysts are used to increase the rate of the wet oxidation reaction Typical cocatalysts could be chosen from the platinum (IV) ruthenium (III) rhodium (III) nickel (II) cobalt (II) palladium (II) or vanadium (V) complex

The process works by forming water-soluble intermediates as organic materials are broken down into smaller molecular species Sometimes polymerization occurs as in the formation of gums in petroleum oils High temperatures (250 to 300°C) may be required to obtain nearly complete conversion of organic matter with the wet oxidation technology

Reference

Dhooge P M 1990 *Method for Treating Organic Waste Material and an Oxidation Catalyst/Cocatalyst Composition Useful Therefor* U S Patent No 4,925 540 May 15

Absorbent Media Cleaning

Absorbent media can be used to remove grease and oil in situations where aqueous or semi aqueous treatments cannot be used as in degreasing water sensitive materials or where lack of floor space makes rinsing impractical Two types of absorbent media have been introduced to replace VOC exempt solvents The first involves wiping with oil absorbent wipers containing polypropylene fibers The second makes use of a variety of particulate absorbents such as natural silicates wheat starch and dry cellulose pulp (Doscher 1991)

The effectiveness of wipers depends on the surface size and viscosity of the grease or oil Cheesecloth and specially produced wipers of fine texture have been used to remove fingerprints from mylar Wipers of larger fiber dimension and rougher surface texture are used to sop up oil used during shop equipment maintenance and are effective on large, exposed surfaces As part complexity increases and part size decreases wipers containing thinner, finer fibers are required

Absorbent media cleaners now are made of recycled materials

The new generation of wipers are made of recycled materials such as polypropylene Because the fibers are not woven or coated excess lint or shedding may occur To combat this problem a ventilation system should be designed to capture fugitive dusts Spent wipers should be disposed of by recycling incinerating or landfilling provided that they were not used to absorb toxic materials Recycling is seen as the most desirable option but in lieu of a cost effective method for removing oil and grease from the fibers incinerating or landfilling the wipers are the only currently available options Because polypropylene has high BTU value incineration may be the better alternative

Loose, particulate absorbents are made of natural materials

Loose particulate absorbents are reported to be even more effective than wipers for removing grease and oil because of their greater surface area and better impingement They may also have a greater affinity for oil (Doscher 1991) The term *particulate absorbent* comprises such materials as siliceous materials and

194

organic cellulose based materials The three commonly used siliceous materials talc kaolin and diatoma ceous earth visibly scratch aluminum surfaces and are unacceptable unless abrasive surface preparation is required Of the organic absorbents tested wheat starch performed best in terms of ease of use and results (Doscher 1991)

Starch waste can be used in various ways so that waste handling requirements are minimal

Starch cleaning involves dipping a foam backed nylon bristle paint pad in the loose starch and using standard wipe techniques The process waste i e the oil soaked starch aggregate is vacuumed or swept away and can be sewered in many cases depending on the toxicology and wastewater characteristics of the oil When sewered the starch itself is useful as a feed stock for municipal processing plants If the process grease or oil cannot be sewered the process waste has BTU value for incineration The nylon bristle pad can be reused many times Thus the waste volume and handling requirements for starch are minimal

In a test to compare cleaning of sesame oil with the solvent MEK to starch cleaning of the same oil starch applied in one wiping cycle (5 up and down scrubs) got the panels 99% clean Using fresh MEK in three successive wipings replacing the wiper each time achieved 96% clean panels (Doscher 1991)

Starch cleaning has been shown to be more effective than cleaning with the solvent MEK

Absorbent cleaning has in the past been regarded as a 'last resort substitution method With starch however the material cost shop time and safety health and environmental considerations outweigh the disadvan tages for cleaning flat exposed surfaces A dust collection unit or vacuum table must be provided to prevent excess material from becoming airborne When the surface is not too complex and dust collection is feasible starch cleaning is a process improvement The effectiveness of starch in a fluidized bed dry cleaning system is described by Doscher and others (1990)

References

Doscher P A 1991 *Grease and Oil Removal Using Absorbent Media* Paper presented at the Second Annual International Workshop on Solvent Substitution Phoenix Arizona December 10 13

Doscher P A N E Larson D D McCain and M J Cooper 1990 Fluidized Bed Dry Cleaning as a Replacement for Vapor Degreasing *Proceedings of the 22nd International SAMPE Technical Confer ence* pp 895 904

195

APPENDIX 4

US EPA Guide to Cleaner Technologies - Alternative Metal Finishes
September 1994, Sections 2 and 5

CONTENTS

		Page
Section Two	**Pollutants of Concern in the Metal Finishing Industry**	9
Section Three	**Available Technologies**	15
	Non-Cyanide Copper Plating	15
	Non-Cyanide Metal Stripping	19
	Zinc-Alloy Electroplating	22
	Blackhole Technology	28
	Ion Vapor Deposition of Aluminum (IVD)	34
	Physical Vapor Deposition (PVD)	39
	Chromium-Free Surface Treatments for Aluminum and Zinc	42
	Metal Spray Coating	44
Section Four	**Emerging Technologies**	47
	Nickel-Tungsten-Silicon Carbide Plating	47
	Nickel-Tungsten-Boron Alloy Plating	49
	In-Mold Plating	51
Section Five	**Pollution Prevention Strategies**	53

197

SECTION TWO
POLLUTANTS OF CONCERN IN THE METAL FINISHING INDUSTRY

Introduction

This section describes the major pollutants of concern in the metal finishing industry and the unit processes and operations that give rise to wastes and pollutants addressed by this cleaner technology guide

Hazardous Materials and Processes

The metals finishing industry is concerned with pollution and wastes generated by all processes but especially those generated by the use of four specific materials in finishing processes (1) the use of cadmium as a plating material, (2) the use of chromium as a plating material, (3) the use of cyanide-based electroplating solutions, and (4) the use of copper/formaldehyde-based electroless copper solutions This section discusses the use, benefits, and hazards of each of these materials in further detail The information presented provides background to the detailed profiles on individual pollution prevention technologies that are presented in Sections Three and Four Most of these technologies address concerns related to cadmium and chromium plating and the use of copper/formaldehyde and cyanide-based plating solutions

Cadmium

Cadmium is a common plating material that has properties superior to other metal coatings in some applications Besides its excellent corrosion resistance, cadmium is valued for its natural lubricity It is commonly used for plating fasteners to ensure that the fasteners pass torque-tolerance tests These tests simulate the action of a power wrench tightening a nut on a bolt The nut should tighten quickly under properly applied torque and hold securely thereafter Cadmium is a soft metal with natural lubricity, these properties give cadmium good torque tolerance and bendability Cadmium also exhibits good corrosion resistance, and meets the salt-spray test requirements of the automotive industry It is a readily solderable metal and is toxic to fungus and mold growth In the past, numerous military specifications have specified the use of cadmium

The major cadmium complex used in electroplating baths is cadmium cyanide, or $Cd(CN)_4^{2}$ Other plating electrolytes include cadmium sulfate, sulfamate chloride, fluoroborate, and pyrophosphate Cadmium fluoborates are used with fluoroboric acid for electrodeposition of cadmium on high-strength steels Cadmium oxide is dissolved in excess sodium cyanide to form the cadmium complex used in the bath most commonly used to plate cadmium

198

Cyanide solutions

Sodium and potassium cyanide are used in electroplating bath formulations for the deposition of copper, zinc, cadmium, silver, gold, and alloys such as brass, bronze, and alballoy (copper-tin-zinc) Electroplating baths may also utilize cyanide compounds of the metal being plated, such as copper cyanide, potassium gold cyanide, or silver cyanide As the plating solution is consumed, complex cyanides are formed from the reaction between metals dissolved at the anode from dropped parts and the sodium or potassium cyanide (called "free" cyanide) In a well-designed wastewater treatment system, most cyanides can be destroyed (oxidized) to concentrations that comply with the CWA Some of the complexed cyanides formed during plating, however, are resistant to conventional oxidation methods and become part of the solid waste stream (EPA Hazardous Waste Number F-006) generated by the system Cyanides used in stripping solutions, especially those for stripping nickel, are similarly resistant to oxidation and typically must be disposed of in bulk at a high cost

Copper/formaldehyde solutions

Electroless copper deposits are frequently used to apply a conductive base to non-conductive substrates such as plastics A thin copper deposit provides a base for an additional decorative or functional coating of copper, nickel, etc One important application is in the coating of printed circuit boards

Formaldehyde, a suspected carcinogen and water pollutant, is used as the reducing agent in electroless copper baths Caustic mists resulting from hydrogen evolution and air sparging in the baths present an additional hazard

Chromium

Chromium plating falls into two basic categories depending on the service feature desired When the goal is mainly a pleasing appearance and maintenance of appearance over time, the plating is considered "decorative" Decorative chromium plating is almost always applied over a bright nickel plated deposit, which in turn can be easily deposited on steel aluminum plastic, copper alloys, and zinc die castings When chromium is applied for almost any other purpose, or when appearance is an incidental or lesser important feature, the deposit is commonly referred to as "hard chromium plating," or more appropriately, "functional chromium plating " Functional chromium plating is normally not applied over bright nickel plating although in some cases, nickel or other deposits are applied first to enhance corrosion resistance

199

Functional chromium plating tends to be relatively thick, ranging from 0 1 mils to more than 10 mils Common applications of functional chromium include hydraulic cylinders and rods, crankshafts, printing plates/rolls, pistons for internal combustion engines, molds for plastic and fiberglass part manufacture, and cutting tools Functional chromium is commonly specified for rebuilding worn parts such as rolls, molding dies cylinder liners, and crankshafts

Decorative chromium plating is most often less than 0 05 mils in thickness, and typically ranges from 0 005 mils to 0 01 mils Decorative chromium plating can be found on numerous consumer items, including appliances, jewelry plastic knobs, hardware, hand tools, and automotive trim

Hexavalent chromium—Traditionally, chromium deposits are produced from an electrolyte containing hexavalent chromium ions These deposits have a pleasing bluish-white appearance Chemical compounds containing hexavalent chromium are used in several metal finishing operations, including plating, conversion coating, sealing of anodic coating, and enhanced adhesion of paint films on phosphated steel Chromium plate is applied to a variety of substrates for abrasion resistance (hardness) and its resistance to household chemicals, as well as its ability to 'hold" lubricants such as oils on the surface and the pleasing appearance (when plated over a bright nickel)

The main ingredient in all hexavalent chromium plating solutions is chromium trioxide (CrO_3), a compound that contains approximately 25 percent hexavalent chromium Other ingredients, typically present only at very low concentrations, are considered to be either catalysts or impurities Hexavalent chromium has been linked to cancer in humans following prolonged inhalation and is toxic to aquatic life at relatively low concentrations Hexavalent chromium in rinsewater can be treated to very low concentrations using reducing agents such as bisulfites and sulfur dioxide

Plating solutions based on hexavalent chromium are very low in current efficiency As a result much of the current (as much as 90 percent) goes towards decomposing water into oxygen and hydrogen gas As the hydrogen and oxygen break the surface of the bath, they carry with them the bath constituents including chromic acid, as a fine mist spray The mist is exhausted through a ventilation system on the plating tank and captured in either a scrubber or mesh pad system Hexavalent chromium emissions from decorative and functional chromium plating operations soon will be regulated under provisions of the Clean Air Act These emissions are presently regulated on the local level throughout the U S

Hexavalent chromium plating solutions typically use lead anodes which decompose over time, forming lead chromates that must be treated and disposed of as hazardous wastes These solutions also are frequently treated with barium compounds to control the sulfate concentration, which creates a barium sulfate that is typically soaked with chromium plating solution and which must be disposed of as a hazardous waste

Fugitive air emissions, water emissions from poorly treated rinsewater, and solid waste generated from hexavalent chromium plating processes can have a detrimental impact on the environment This impact can be eliminated or reduced if a cleaner technology is used

It is particularly difficult to substitute alternate materials for chromium because of chromium's hardness, bright appearance, resistance to commonly encountered corrosive environments, ease of application, and low cost

Hexavalent chromium chemicals, such as chromic acid, are frequently used in metal plating applications to provide chromium coatings exhibiting hardness and aesthetic appeal Chromium plating is used to provide a working surface for a part It is also the standard method for improving hardness and smoothness for a wide variety of substrates, as well as the resistance to wear, abrasion, galling, or high temperatures Typical applications are cylinder liners and pistons for internal combustion engines, and cylinders and rams for hydraulic pistons (Guffie, 1986) Chromium plating will continue to be needed for specific applications, but alternatives are available for many traditional uses Because of environmental concerns, design engineers will be required to explore alternative technologies and be more selective in specifying chromium plating in the future

Trivalent chromium—Decorative chromium plating is produced using aqueous solutions that contain either hexavalent or trivalent chromium compounds The trivalent chromium process has been available for 20 years and is considered less toxic and more environmentally friendly because of the lower toxicity of trivalent chromium and the lower content of chromium in the plating solution Over the last few years, several competitive plating processes based on trivalent chromium have been developed Some of these processes yield a deposit that more closely resembles the plating produced by a hexavalent solution, albeit at a slightly higher cost and requiring more careful control of plating conditions Functional chromium plating presently is available commercially only from the hexavalent formulation, although recent efforts to optimize trivalent chromium formulations and bath operation for hard plating show promise (Kudryavtsev and Schachameyer, 1994)

Waste Generation and Waste Handling

The major pollutants of concern in the metal finishing industry are spent solutions containing heavy metals and other toxic and noxious chemicals Metal finishing operations typically treat these solutions in wastewater

pretreatment systems designed to meet CWA requirements These systems in turn generate solid and liquid wastes that are regulated under the provisions of RCRA The air emissions from many metal finishing processes must be controlled using scrubbing equipment These can generate further wastes that must also be treated disposed or recycled Some of the processing solutions used in metal finishing have a finite life, especially conversion coating solutions, acid dips cleaners and electroless plating baths These processes yield additional concentrated wastes that must be treated and disposed of

Physical processes such as abrasive blasting, grinding, buffing, and polishing do not contribute as much to hazardous waste generation as chemical and electrochemical processes The chemical and electrochemical processes are typically performed in chemical baths that are followed by rinsing operations The most common hazardous waste sources are rinse water effluent and spent process baths

It is important to recognize that wastes are created as a result of the production activities of the metal finishing facility, not the operation of wastewater pretreatment and air scrubbing systems If the finishing processes were inherently "cleaner," significant progress could be made toward reducing environmental impacts

SECTION THREE
AVAILABLE TECHNOLOGIES

Introduction

This chapter describes cleaner technologies commercially available for the metal finishing industry that can reduce the finisher's reliance on one or more materials of environmental concern (e g , cadmium chromium, cyanide, copper/formaldehyde)

NON-CYANIDE COPPER PLATING

Pollution Prevention Benefits

Alkaline non-cyanide copper plating solutions eliminate cyanide from rinse water and sludges generated during waste treatment of the rinsewater Non-cyanide baths contain one-half to one-quarter as much copper as full strength cyanide processes, resulting in lower sludge volume generation rates The sludges from waste treatment of cyanide bearing rinsewater (EPA Hazardous Waste Number F-006) can be particularly difficult to dispose of because of residual cyanide content which is regulated by RCRA to a maximum of 590 mg/kg of total cyanide and 30 mg/kg of cyanide amenable to chlorination By eliminating cyanide from the rinsewater, compliance with cyanide regulations in wastewater discharges is ensured (in the absence of other cyanide bearing processes) Rinsewater from alkaline non-cyanide copper plating only requires pH adjustment to precipitate copper as the hydroxide This eliminates the need for a two-stage chlorination system from the waste treatment system and avoids the use of chemicals such as chlorine and sodium hypochlorite

How Does it Work?

Non-cyanide copper plating is an electrolytic process similar to its cyanide-based counterpart. Operating conditions and procedures are similar, and existing equipment usually will suffice when converting from a cyanide-based process to a non-cyanide process Alkaline non-cyanide processes operate in a pH range of 8 8 to 9 8 compared to a pH of 13 to 14 for the cyanide processes At least one proprietary process requires the addition of a purification/oxidation cell to the plating tank

Why Choose this Technology?

Applications

Non-cyanide copper plating baths are commercially available for coating steel, brass lead-tin alloy, zinc die cast metal, and zincated aluminum The process can be used for rack or barrel plating Other applications include fasteners, marine hardware plumbing hardware, textile machinery, automotive and aerospace parts, masking applications, electro-magnetic interference (EMI) shielding, and heat treatment stop-off Non-cyanide copper plating can be applied as a strike (thin deposit), or as a heavy plate

Operating Features

Non-cyanide copper plating has the following characteristics

- Bath temperatures typically are elevated (110°F to 140°F) The pH is in the range of 8 8 to 9 8 Throwing power is as good as that of cyanide-based processes

- Deposits have a matte appearance with a dense fine-grained amorphous microstructure Semi-bright to bright appearances can be obtained with the use of additives,

- Copper ions are present in the Cu++ state as compared to Cu+ for cyanide-based baths, providing a faster plating speed at the same current density

- Changing over to a non-cyanide process requires a lined tank and a purification compartment outside of the plating tank (for at least one commercial process) Good filtration and carbon treatment are also mandatory

Assuming 100 percent cathode efficiency, a non-cyanide bath requires twice as much current to plate a given weight of copper as a cyanide copper bath The non-cyanide process, however, can operate at higher current densities, yielding plating speeds that are equivalent to or faster (in barrel plating) than the cyanide process

Required Skill Level

Non-cyanide copper plating requires more frequent bath analysis and adjustment than does cyanide-based plating Cyanide-based copper plating baths are relatively forgiving to bath composition Operating personnel should be capable of operating the non-cyanide process as easily as the cyanide-based process

Cost

Operating costs for the bath itself are substantially higher for the non cyanide process than the cyanide process Because replacing the cyanide-based bath with a non-cyanide bath eliminates the need for treatment of cyanide-containing solutions however the cost differential between the two processes is greatly reduced Unless a facility faces substantial compliance costs for cyanide emissions the higher operating costs of the non-cyanide process may not justify conversion on a cost comparison basis alone

Reported Applications

The use of non-cyanide copper plating baths is not widespread in industry One industry consultant reports that the number of companies running non-cyanide plating trials is small but growing (Altmayer, 1994) Of the companies that have tried the process several have switched back due to the higher costs of the non-cyanide alternative

One application for non-cyanide plating that could be attractive from a cost perspective alone is selective carburizing This process is used widely in the heavy equipment industry for hardening portions of coated parts such as gear teeth Gears must be hard at the edges but not throughout, since hardness throughout could cause the part to become brittle To achieve this selective hardening, a copper mask is applied to that portion of the part which is not targeted for hardening, and the part is then treated with carbon monoxide and other gases In addition to eliminating the use of cyanide, non-cyanide copper baths can improve production efficiency of this masking process and produce a more dense carbon deposit

Availability

Non-cyanide processes are commercially available from several sources These sources typically advertise in the following trade journals

- *Metal Finishing*
- *Plating and Surface Finishing*
- *Products Finishing*
- *Industrial Finishing*

Operational and Product Benefits

Non-cyanide copper plating has the following benefits

- Greatly reduces safety risks to workers
- Greatly reduces the costs and complexity of treating spent plating solutions
- Drag-out to an acidic bath poses no risk of HCN evolution
- Plating solution does not have to be treated for carbonates

Replacement of cyanide based plating baths greatly reduces safety risks to workers Cyanide is extremely toxic and electroplaters are most at risk for exposure to hydrogen cyanide (HCN) through ingestion and inhalation Skin contact with dissolved cyanide salts is somewhat less dangerous but will cause skin irritation and rashes The most likely scenario for exposure to lethal doses of HCN is an accident involving the addition of an acid to a cyanide-containing electroplating bath or the mixing of cyanide wastes with acid-containing waste streams

Hazards and Limitations

Cyanide-based baths remove impurities so that coatings are not compromised Non-cyanide baths are less tolerant of poor surface cleaning, so thorough cleaning and activation of the surface to be coated is critical

With one exception, alkaline non-cyanide processes are unable to deposit adherent copper on zinc die castings and zincated aluminum parts The exception is a supplier that claims to be able to plate such parts using a proprietary process Several facilities are currently testing this process on a pilot scale (Altmayer, 1994) Two facilities using the process reported that the application costs approximately two to three times as much as other processes, even when waste treatment and disposal costs are included One of the facilities discontinued use of the process, while the other facility believed that the added safety and compliance insurance was worth the cost and has continued with the process

Summary of Unknowns/State of Development

Non-cyanide copper plating baths typically are developed by manufacturers of bath solutions Chemical compositions and their formulae are proprietary information and are outside the public domain As a result very little has been published on development activities According to one manufacturer, product improvement will continue for some time, although no major developments are expected

REFERENCES

Altmayer, F 1994 Personal communication between Frank Altmayer, Scientific Laboratories, Inc and Jeff Cantin Eastern Research Group Inc April, 1994

Altmayer F 1993 Comparing substitutes for Cr and Cu, to prevent pollution *Plating and Surface Finishing* February pp 40-43

Barnes C 1981 Non-cyanide copper plating solution based on a cuprous salt. *Annual Technical Conference - Institute of Metal Finishing* Harrogate, England (May 5-9) London Institute of Metal Finishing

Humphreys, P G 1989 New line plates non-cyanide cadmium *Products Finishing* May pp 80-90

Janikowski S K et al 1989 Noncyanide stripper placement program Air Force Engineering & Services Center ESL-TR-89-07 May

Kline G A 1990 Cyanide-free copper plating process U S Patent 4 933 051 June 12 1990

Kline G A and J M Szotek 1990 Alkaline non-cyanide copper plating *Asia Pacific Interfinish '90 Growth Opportunities in the 1990s* Singapore (November 19-22) Victoria, Australia Australasian Institute of Metal Finishing

Krishnan, R M 1990 A noncyanide copper plating electrolyte for direct plating on mild steel *Bulletin of Electrochemistry* 6(11) November pp 870-872

NON-CYANIDE METAL STRIPPING

Pollution Prevention Benefits

The use of cyanide based metal strippers results in the generation of cyanide-contaminated solutions These solutions require special treatment and disposal procedures The use of a non-cyanide stripper eliminates cyanide from the spent stripper solution In general these non-cyanide strippers are less toxic than their cyanide-based counterparts and more susceptible to biological and chemical degradation, resulting in simpler and less expensive treatment and disposal of spent solutions

In addition, the use of a non-cyanide stripper can simplify the removal of metals from spent solutions These metals are difficult to remove from cyanide-based solutions because they form a strong complex with the cyanide ligand

How Does it Work?

Metal strippers are used to remove metallic coatings previously deposited on parts Metal stripping is a common practice that might be required when defective coatings have been applied, or when reconditioning of parts and reapplication of worn coatings is required Another common use of metal strippers is rack plating where it is employed to remove coatings that build up on part holders Cyanide-based stripping solutions act by assisting in the oxidation of the coating metal The oxidized metal complexes with the cyanide ligand and is subsequently solubilized

Because non-cyanide stripping solutions are typically proprietary formulations, the detailed chemistry of coating removal is not known for most solutions Stripping solutions are available for a wide variety of coating metal/base metal combinations Some of the stripping processes are electrolytic, others are not Processing temperatures, bath life, ease of disposal, and other operating characteristics vary widely

Why Choose this Technology?

Applications

Metal strippers can be purchased for a wide variety of coating and substrate metals The U S Air Force has performed testing on a number of non-cyanide strippers, particularly nickel and silver non-cyanide strippers Several of these strippers have been adopted at Kelly Air Force Base Applications are not limited to aerospace however, and industries such as railroads (locomotive crankshafts), automotive parts, and silverware all use stripping agents prior to refinishing In addition, stripping is a normal step

in any production line using rack plating, as racking equipment will become encrusted with plate material and must be removed on a regular basis

Operating Features

The wide variety of non-cyanide strippers makes it difficult to generalize about operating parameters Some strippers are designed to operate at ambient bath temperatures whereas others are recommended for temperatures as high as 180°F Stripping processes range from acidic to basic In general, the same equipment used for cyanide-based stripping can be used for non-cyanide stripping With acidic solutions, however, tank liners might be needed to prevent corrosion

Required Skill Level

Personnel trained in the use of cyanide-based strippers should also be able to use non-cyanide strippers For example, the U S Air Force reported that higher skill levels were not required for the non-cyanide metal strippers implemented at Kelly Air Force Base

Cost

Non-cyanide strippers will have some impact on costs

- Waste treatment costs will be reduced when switching to non-cyanide strippers If cyanide-based solutions are not used elsewhere in the facility, the cyanide treatment system can be eliminated
- A large capital outlay is not required when switching to a non-cyanide stripper because the equipment requirements are generally the same
- The costs of the makeup solutions will increase slightly

Reported Applications

Non-cyanide strippers have been available for many years Major drawbacks of this new technology include lack of speed etching of some substrates, and the need for electric current As the disposal costs of cyanide-based strippers continue to escalate however many companies have switched to non-cyanide stripping methods Production cycles have been adjusted to account for the slower stripping speed

Availability

A partial list of companies that supply non-cyanide strippers is found below This list does not constitute a recommendation

Circuit Chemistry Corp	Metalline Chemical Corp
Electrochemical, Inc	Metalx Inc
Frederick Gumm Chemical Company	OMI International
Kiesow International	Patclin Chemical Company
MacDermid Inc	Witco Corporation

Operational and Product Benefits

Cyanide based strippers typically contain chelating agents and strong metal-cyanide complexes that make waste treatment of spent strippers and rinsewater extremely difficult The use of non-cyanide based strippers improves waste treatment, making it easier and more efficient

At least one proprietary non-cyanide stripping process can crystallize stripped nickel coatings Crystallization extends the life of the stripping solution indefinitely and creates a product that is readily recycled by commercial firms

Non-cyanide metal strippers have the following benefits

- Significant potential for reducing waste treatment costs
- Often easier to recover metals from spent solutions
- Bath life is longer because higher metal concentrations can be tolerated

One of the main incentives for eliminating the use of cyanide-based stripping processes is to reduce health hazards to personnel Although cyanide in solution is itself very toxic, one of the main dangers for electroplaters is the accidental addition of acid into the cyanide bath, resulting in the formation of hydrogen cyanide gas, HCN Dermal contact with dissolved cyanide salts is less dangerous than inhaling HCN or ingesting cyanide, but it nonetheless will still cause skin irritation and rashes

Facilities that consider switching to non-cyanide strippers must consider the health and safety aspects of the substitute, such as higher operating temperatures, corrosivity, and so on

Hazards and Limitations

Non-cyanide metal strippers have some disadvantages

- For some strippers, the recommended process temperatures are high enough to cause safety problems Operating at lower temperatures can slow down the stripping reaction and result in a loss of effectiveness
- Stripping rates for certain coatings might be lower than for cyanide-based counterparts
- Some strippers can produce undesirable effects on substrate metals, even if the stripper has been recommended by the manufacturer for the application in question

Summary of Unknowns/State of Development

The removal of nickel coatings is a major use for non-cyanide strippers Advances in non-cyanide alternatives for nickel have been spawned by the difficulty of treating nickel-cyanide waste streams Opportunities for further improvement still remain, however, as non-cyanide processes are significantly slower than cyanide processes (8 hours versus 1 hour) Future development will focus on speeding up the process and adjusting the product to handle different metal coatings (e g , silver) and substrates

REFERENCES

Janikowski, S K. et al 1989 Noncyanide Stripper Placement Program Air Force Engineering & Services Center ESL-TR-89-07 May

ZINC-ALLOY ELECTROPLATING

Pollution Prevention Benefits

Alloys of zinc can be used to replace cadmium coatings in a variety of applications Cadmium is a heavy metal that is toxic to humans In addition, electroplated cadmium coating processes normally are performed in plating solutions containing cyanide Cyanide is highly toxic to humans and animal life The use of both cadmium and cyanide can be eliminated by substituting an acid or non-cyanide alkaline zinc-alloy coating process for a cyanide-based cadmium electroplating process

How Does it Work?

Both zinc and zinc-alloy electroplating processes are very common and have a long history in the electroplating industry Recently, however, these processes have been considered as possible replacements for cadmium coatings (Zaki 1993) Viable replacements for cadmium should provide

210

equivalent properties, such as corrosion protection and lubricity, at an affordable cost The ideal cadmium coating replacement is also a non-cyanide-based process, because this also eliminate cyanide waste and associated treatment costs

Among the zinc and zinc-alloy processes evaluated as cadmium replacements, the most promising are the following

- Zinc-nickel
- Zinc-cobalt

Zinc alone can provide corrosion protection equivalent to cadmium at plating thicknesses above 1 mil For thinner deposits, however, cadmium will outperform zinc Additionally, zinc coatings cannot match the other properties for which cadmium is valued, e g , lubricity For this reason, zinc is not considered to have wide potential for replacing cadmium (Brooman, 1993) Similarly, alloys such as zinc-iron may not qualify because they cannot match cadmium's appearance attributes Tin-zinc is a potential substitute for cadmium (Blunden and Killmeyer, 1993) but will probably remain prohibitively expensive for most applications

Table 3 compares relevant properties for several zinc alloys The identification of zinc-nickel and zinc-cobalt as the alloys with the greatest potential for as a cadmium substitute is based on their properties and on the range of applications for which these alloys have already seen commercial use (see below)

Why Choose this Technology?

Reported Applications

The ability of any alternative coating to replace cadmium depends on the properties required by the application in question Some zinc alloys have as good and in some cases better resistance to corrosion, as measured in salt spray tests Few match cadmium for natural lubricity in applications such as fasteners, however In addition where cadmium is selected for its low coefficient of friction or for its low electrical contact resistance, none of the candidates mentioned above may be suitable Table 3 indicates that applications requiring heat treatment would eliminate zinc-cobalt alloys as a substitute

Operating Features

Some of the operating features of the zinc-nickel and zinc-cobalt alloys are listed in Table 4 Both zinc-nickel and zinc-cobalt can be plated from acid or alkaline baths

Table 3 Comparison of zinc alloy processes

	Bath Type				
	Alkaline Zinc	Alkaline Zinc-Nickel	Neutral Tin Zinc	Alkaline Zinc Iron	Acid Zinc-Cobalt
Deposit properties					
Appearance	Good	Good	Fair	Good	Excellent
Solderability	Fair	Fair	Excellent	Fair	Fair
Abrasion resistance	Fair	Good	Poor	Fair	Fair
Whisker	Fair	Good	Fair Good	Fair	Fair
Ductility	Fair	Fair	Excellent	Fair	Fair
Corrosion resistance			As plated		
To white rust	Fair	Excellent	Fair	Excellent	Fair
To red rust	Fair	Excellent	Excellent	Good	Good
			Heat treated		
To white rust	Poor	Good	Poor	Poor	Poor
To red rust	Poor	Good	Fair	Poor	Poor
			After bending		
To white rust	Fair	Good	Fair	Fair	Fair
To red rust	Fair	Good	Excellent	Fair	Fair
Bath characteristics					
Throwing power	Good	Excellent	Poor	Good	Poor
Plating speed	Fair	Poor	Good	Fair	Good
Covering power	Fair	Fair	Excellent	Fair	Fair
Bath control	Good	Fair	Fair	Fair	Fair
Analysis & measurement			Thickness		
X ray fluorescence	Good	Good	Good	Good	Good
Coulometric	Good	Good	Good	Good	Good
			Alloy ratio		
X ray fluorescence	Good	Good	Good	Poor	Fair
Wet analysis	Good	Good	Good	Fair	Fair
Anodes	Separate	Zinc	Alloy	Zinc	Zinc

Source Budman and Sizelove (1993)

212

Required Skill Level

Switching to a zinc or zinc-nickel coating process does not require any increase in operator skill level These are conventional electroplating processes that require little or no retraining Increased attention to bath monitoring and adjustment might be necessary because these processes are more sensitive to bath contaminants and variations in bath parameters than cyanide-based baths

Table 4 Bath parameters for zinc-nickel and zinc cobalt plating

	Plating bath				
Properties	Acid Zinc Nickel (rack plating)	Acid Zinc Nickel (barrel plating)	Alkaline Zinc Nickel	Acid Zinc Cobalt	Alkaline Zinc Cobalt
Bath contents	Zinc chloride nickel chloride potassium chloride	Zinc chloride nickel chloride	Zinc metal nickel metal sodium hydroxide	Zinc metal potassium chloride ammonium chloride cobalt (as metal) boric acid	Zinc caustic soda, cobalt metal
pH	5 0-6 0	5 0-6 0	n/a	5 0-6 0	n/a
Temp °C	24 30	35-40	23 26	21 38	21 32
Cathode CD A/dm²	0 1-4 0	0 5 3 0	2 10	0 1 5 0	2 0-4 0
Anode CD A/dm²	n/a	n/a	5 7	n/a	n/a
Anodes	Zinc and nickel separately	Zinc and nickel separately	Pure zinc	Pure zinc	Steel

Source Budman and Sizelove (1993)

Acid zinc-nickel delivers a higher nickel content than the alkaline bath (10 percent to 14 percent versus 6 percent to 9 percent) Corrosion protection increases with nickel content up to about 15 percent, thus favoring the acid bath Acid solutions, however, tend to produce deposits with poorer thickness distribution and greater alloy variation between high and low current density areas Alkaline baths produce a deposit featuring columnar

structures (which tend not to favor applications that require bendability), as opposed to the laminar structure deposited by the acid system Alkaline baths are simpler to operate and are similar to conventional noncyanide zinc processes (Budman and Sizelove, 1993)

Zinc-cobalt deposits contain approximately 1 percent cobalt with the remainder made up of zinc The acid bath has a high cathode efficiency and high plating speed with reduced hydrogen embrittlement compared to alkaline systems Thickness distribution of the acid bath varies substantially with the current density

Cost

Existing electroplating equipment can be used for any of these alternative processes Therefore, a large capital expenditures would not be required to switch to an alternative process Conversion to an acid bath, however, does require existing tanks to be relined With older equipment, new tanks might possibly have to be installed to provide the necessary corrosion resistance

The costs associated with cyanide waste treatment can be eliminated for any process line in which a cyanide-based cadmium process is replaced

Reported Applications

Acid baths have been used for some time in zinc and zinc alloy plating The desire to eliminate cyanide from the plating process has resulted in the development of non-cyanide alkaline baths and chloride-based baths for zinc coatings The use of zinc-nickel alloys has gained ground because of their potential to replace cadmium particularly in Japan and other countries where the use of cadmium coatings has been curtailed or prohibited for several years Zinc-nickel alloys have been introduced in Japan and Germany in the automotive industry for fuel lines and rails, fasteners, air conditioning components, cooling system pumps, coils and couplings (Budman and Sizelove, 1993) Improved warranty provisions from vehicle manufacturers such as Honda, Toyota and Mazda further boosted applications for zinc alloys Chrysler followed with new specifications for zinc-nickel and zinc-cobalt in 1989, and Ford developed specs for alkaline zinc-nickel to replace cadmium in 1990 (Zaki 1993) Additional applications include electrical power transmitting equipment lock components and the maritime, marine and aerospace industries Zinc-nickel coatings have also reportedly been substituted for cadmium on fasteners for electrical transmission structures and on television coaxial cable connecters (Brooman, 1993)

Availability

Zinc alloy plating systems are commercially available from numerous manufacturers Suppliers can be identified through articles or

advertisements appearing in trade journals such as *Metal Finishing, Plating and Surface Finishing*, and *Products Finishing*

Operational and Product Benefits

Replacing cyanide-based cadmium coating with one of the processes described eliminates workplace exposure to both cadmium and cyanide, and reduces environmental releases of both these chemicals

Additional operational benefits may result depending on the properties of the alloy relative to the cadmium deposit being replaced

- Corrosion resistance for zinc is as good as cadmium for many applications
- Zinc-nickel alloys have better wear resistance than cadmium
- Zinc-cobalt deposits show good resistance to atmospheres containing SO_2

As discussed, the desired properties for the application must be matched to the properties of the alloy

Hazards and Limitations

Zinc and zinc-nickel alloy electroplating processes have the following disadvantages

- Electrical contact resistance is higher for zinc than for cadmium
- Zinc and zinc-nickel alloy coatings do not have the lubricity of cadmium coatings
- Acid zinc coatings have comparatively poorer throwing power than cadmium, and deposits are not fully bright
- In general, plating with non cyanide-based plating processes requires that parts be cleaner than for cyanide based processes

Summary of Unknowns/State of Development

The processes outlined above are well-developed and are available from numerous vendors These alternatives, however, have only recently been considered as replacements for cadmium coatings Industry recognizes that the move away from cadmium plating is well underway and zinc alloys are expected to play an important role as substitute (Zaki, 1993) Nonetheless, more work needs to be done to compare these alternative coatings to cadmium for specific applications

REFERENCES

Blunden, S.J and A.J Killmeyer 1993 Tin-zinc alloy plating a non-cyanide alkaline deposition process *1993 SUR/FIN* pp 1077-1081

Brooman, E 1993 Alternatives to cadmium coatings for electrical/electronic applications *Plating and Surface Finishing* February pp 29-35

Budman, E and R Sizelove 1993 Zinc alloy plating *1993 Products Finishing Directory* pp 290-294

Courter, E. 1990 Zinc-nickel alloy electroplating of components corrosion resistance is selling point for autos *American Metal Market* May 17 p 17

Dini, J W 1977 Electrodeposition of zinc-nickel alloy coatings *Workshop on Alternatives for Cadmium Electroplating in Metal Finishing* Gaithersburg, MD (October 4) Washington U S Dept. of Energy 38 pp

Hsu G F 1984 Zinc-nickel alloy plating an alternative to cadmium *Plating and Surface Finishing* April pp 52-55

Sharples, T.E. 1988 Zinc/zinc alloy plating *Products Finishing* April pp 50-56

Sizelove, R R 1991 Developments in alkaline zinc-nickel alloy plating *Plating and Surface Finishing* March pp 26 30

Wilcox, G D and D R Gabe 1993 Electrodeposited zinc alloy coatings *Corrosion Science* 35(5-8) p 1251-8

Zaki, N 1993 Zinc alloy plating *1993 Products Finishing Directory* pp 199-205

BLACKHOLE TECHNOLOGY

Pollution Prevention Benefits

The Blackhole Technology Process is an alternative to the electroless copper method used in printed wire board manufacturing The following qualities make it environmentally attractive

- Fewer process steps
- Reduced health and safety concerns
- Reduced waste treatment requirements
- Less water required
- Reduced air pollution

The chemistry in the Blackhole process avoids the use of metals (copper, palladium, tin) and formaldehyde used in electroless copper processes The smaller number of process steps reduces the use of rinse water, decreasing waste treatment requirements

How Does it Work?

The Blackhole Technology Process uses an aqueous carbon black dispersion (suspension) at room temperature for preparing through-holes in printed wire boards (PWBs) for subsequent copper electroplating The carbon film that is obtained provides the conductivity needed for electroplating copper in the through-holes The process steps are described in the following paragraphs and compared with the process steps used for the electroless copper method

Why Choose this Technology?

Applications

The Blackhole Technology Process eliminates the need for electroless copper metalization of through-holes prior to electrolytic plating in the PWB industry Formaldehyde, a suspected carcinogen and water pollutant is an ingredient of the electroless copper plating process The Blackhole process eliminates this waste stream and avoids costs and environmental/health risks associated with disposal or treatment of spent electroless copper plating solutions

Operating Features

PWBs must be pretreated for desmear/etchback in both the Blackhole Technology and electroless copper processes Permanganate is the preferred desmear process for Blackhole Technology because of its wide operating conditions and the resulting hole-wall topography

Process Comparison

PWB manufacturers typically use the electroless copper process to plate through-holes The electroless copper process consists of the following operational steps

217

1 Acid cleaner	10 Rinse
2 Rinse	11 Electroless copper bath
3 Micro etch (sodium persulfate solution)	12 Rinse
4 Rinse	13 Sulfuric acid (10 percent) dip
5 Activator pre-dip	14 Rinse
6 Catalyst	15 Anti-tarnish dip
7 Rinse	16 Rinse
8 Rinse	17 Deionized water rinse
9 Accelerator	18 Forced air dry

These steps are performed in order on a process line that uses an automated hoist to move racks of parts from tank to tank All of the rinses are single use and generate large quantities of wastewater that contains copper The rinses following the electroless copper bath (from Step 11 on) contain complexed copper, which is hard to treat using typical wastewater treatment technology, such as metal hydroxide precipitation

The Blackhole Technology process replaces the electroless copper process for through-hole plating with a carbon black dispersion in water The Blackhole Technology process consists of the following process steps

1 Blackhole alkaline cleaner	7 Micro-etch
2 Rinse	8 Rinse
3 Blackhole alkaline conditioner	9 Anti tarnish dip
4 Rinse	10 Rinse
5 Blackhole bath	11 Dry
6 Dry	

Steps 1 through 6 are performed, then repeated Steps 7 through 11 complete the process All process steps are performed automatically on either a horizontal conveyor system or using existing hoists and bath systems (see Figure 1)

218

Figure 1
Blackhole Technology Plating Line

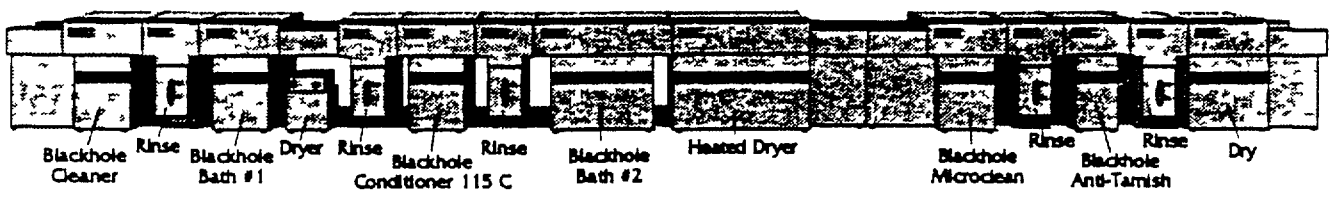

Hollmuller Combistem CS-65

Source MacDermid Inc

The Blackhole Technology Process first uses a slightly alkaline cleaning solution containing a weak complexing agent. The solution is operated at 135°F (57°C) to remove drilling debris from the hole-wall, to clean the copper surfaces, and to prepare the hole-wall surface for the subsequent conditioning step

A second alkaline solution containing a weak complexing agent serves as the conditioner This solution is applied at room temperature The conditioner neutralizes the negative charge on the dielectric surfaces, which helps to increase the absorption of the carbon in the next step

The Blackhole Technology step uses a slightly alkaline, aqueous carbon black-based suspension operating at room temperature The viscosity of the solution is very close to water The carbon particles have a diameter of 150 to 250 nanometers (1500 Angstroms to 2500 Angstroms)

Conventional plating tanks and horizontal-conveyorized systems can be used for the Blackhole Technology Process

Material and Energy Requirements.

Compared to electroless copper, the Blackhole Technology Process uses fewer individual process steps Some process steps are repeated, which reduces the floor space needed for the process baths The number of chemicals used also is reduced The energy requirements should be about the same, because both processes use a drier and several heated solutions

Required Skill Level

The skill level required of system operators running the Blackhole process is the same as or less than that for electroless copper processing

Cost

If existing process equipment is used, the only installation cost is the disposal of the electroless copper solutions, cleaning of the tanks, and replacement with the Blackhole Technology process solutions

Reported Applications

The Blackhole Technology process has been available commercially since 1989 The technology is currently used by PWB manufacturers but is gaining acceptance Military Standard MIL-P-55110D now permits through-hole plating technologies other than electroless copper

220

Availability

The Blackhole Technology process is sold by Mac Dermid (formerly Olin Hunt)

Operational and Product Benefits

Process Simplification—The Blackhole technology requires fewer process steps as well as associated chemicals and rinses, greatly reducing waste streams from PWB plating

Contamination Reduction—Unlike the electroless copper process, the Blackhole Technology Process does not use formaldehyde

Ease of Implementation—Because the Blackhole process uses existing equipment in an electroless copper process line, it should be very easy to implement.

Acceptable Product Quality—Product quality should not be affected The Blackhole Technology process is accepted under MIL-P-5511OD

Lower Operating Costs—The Blackhole process results in reduced costs for chemicals, water, and wastewater treatment.

Hazards and Limitations

By using a carbon black suspension, the Blackhole process avoids the use of metals (copper, palladium, and tin) and formaldehyde The process solutions used in the Blackhole process are mildly alkaline and pose a small skin/eye irritation hazard Overall health risks would be significantly reduced if the electroless copper process was replaced by the Blackhole Technology Process

State of Development

The Blackhole Technology is commercially available

REFERENCES

Battisti, A.J 1986 Blackhole beyond electroless copper In *Proceedings, National Electronic Packaging and Production Conference* Anaheim, CA February 25-27 Vol 2 pp 271-37

Olin Hunt. Undated Blackhole Technology Olin Hunt, 5 Garret Mountain Plaza, West Paterson, NJ 07424 Product literature

Plakovic, F 1988 Blackhole - a description and evaluation Presented at IPC Fall Meeting Anaheim, CA October 24-28 IPC-TP-754

Printed Circuit Fabrication 1990 Blackhole update 13(5) May pp 36-42

ION VAPOR DEPOSITION OF ALUMINUM (IVD)

Pollution Prevention Benefits

Electroplated cadmium coating processes normally use plating solutions that contain cyanide Cadmium is a heavy metal that is toxic to humans In addition, cyanide is highly toxic to humans and animal life Aluminum coatings deposited through ion vapor deposition (IVD) can replace cadmium coatings in some applications, eliminating the use of both cadmium and cyanide Aluminum is considered nontoxic, and IVD does not employ or create any hazardous materials

How Does it Work?

In IVD, the coating metal is evaporated and partially ionized before being deposited on the substrate A typical IVD system consists of a steel vacuum chamber (measuring 6 feet in diameter by 12 feet in length), a pumping system, a parts holder, an evaporation source, and a high-voltage power supply

Parts to be coated must be clean to ensure good adhesion of the coating To minimize surface contamination, parts are treated frequently with a dry blasting process using pure aluminum oxide mesh (150-220 mesh) Parts then are loaded into the chamber on racks, or suspended on hooks from the ceiling The chamber may hold as few as 2 large parts to as many as 1,000 small parts

Once loaded, a vacuum is drawn on the chamber to remove trace gases and vapors from the parts, racks, and chamber shields The chamber is then backfilled with argon to 10 microns, and a large negative potential is applied between the evaporation source and the parts to be coated The argon ions created by the potential difference bombard the part surfaces, dislodging substrate atoms and removing surface contamination (sputtering) As this occurs, the parts typically emit a glow of light. This gas cleaning cycle lasts approximately 10 to 20 minutes

The evaporation apparatus consists of a series of concave ceramic "boats" through which a thin strand of aluminum wire is continuously fed These boats can move back and forth between the parts to ensure even coverage A high current supplied to the boat melts and vaporizes the aluminum Once evaporated, the aluminum atoms collide with high-energy electrons in the chamber and become ionized The positively aluminum charged ions accelerate toward the negatively charged substrate, condensing to form a protective metal coating

The coating process itself can take between 1 hour and 2 5 hours, depending on the configuration of the parts and the desired coating thickness

222

Why Choose this Technology?

Applications

IVD aluminum coatings can be applied to a wide variety of metallic substrates, including aluminum alloys, and most recently, to plastic/composite substrates To date, IVD has been mainly used on high-strength steels in the aerospace industry and for some marine applications According to Nevill (1993), IVD and paint currently are specified as the prime coatings on three leading Department of Defense missile contracts (Patriot, Amraam, and Lantirn) IVD has replaced anodize on fatigue-critical structures such as wing sections and bulkheads on both military and commercial aircrafts Lansky (1993) reports that approximately 80 percent of aircraft parts currently coated with cadmium can be coated with IVD aluminum with no change in corrosion control or performance

IVD aluminum coatings tend to be porous when applied Burnishing with glass media often is used to reduce porosity and improve the durability of the finish Thin coatings of IVD aluminum (0 001 inches) may exhibit low corrosion resistance Such parts are often chromated after the coating is applied to improve corrosion resistance

IVD coatings tend to be brittle on fatigue-prone substrates and are applied most often to parts that are not subject to fatigue in service A common application is steel fasteners on aluminum parts, which must be coated to avoid galvanic corrosion in service IVD aluminum is ideal since identical metal provides for zero galvanic corrosion potential, and the steel core provides much higher strength than solid aluminum fasteners

Advantages of IVD aluminum coatings are the uniformity of thickness and the excellent "throwing power" that results from the scattering of metal ions Deposition is not limited strictly to "line of sight" applications, and parts with complex shapes, such as fasteners, can be coated successfully The process is limited, however, in its ability to deposit coating into deep holes and recesses In configurations where hole depth exceeds the diameter for example, thickness distribution can drop off substantially The reduced thickness in these areas may not be significant since the relevant military specification (MIL-C-83488C) requires coating of recessed areas without specifying the required thickness of the deposit

Operating Features

IVD has the following operating features

- Large and/or complex parts can be plated
- Somewhat limited to "line of sight" applications
- There is no buildup of the coating on sharp edges, such as can occur in electroplating

Required Skill Level

Although equipment for IVD is entirely different that used in electroplating, operators who have performed cadmium electroplating have sufficient skills and education to be retrained to perform IVD Maintenance of the equipment would require significant retraining Although the equipment requires less routine maintenance overall, proper maintenance of vacuum pumps, in particular, is critical to the operation

Cost

Capital costs and operating costs for aluminum IVD equipment are significantly higher than electroplating, but are partially offset by reduced waste treatment and disposal costs IVD does not generate hazardous waste, and it requires less maintenance than tank electroplating IVD also does not require handling of hazardous chemicals, ventilation systems, plating solutions, and rinse tanks

A typical IVD system can cost in excess of $500,000 with another $500,000 for installation Electroplating equipment and wastewater treatment for producing the same amount of plated work would be approximately 1/4 to 1/6 that amount (Altmayer, 1994) The costs of the aluminum IVD process are higher than those for cadmium physical vapor deposition (PVD), but lower than those for either the low-embrittlement or diffused nickel-cadmium processes Costs for cadmium electroplating are likely to keep rising because of ever-increasing hazardous waste disposal costs In contrast, more widespread use of IVD aluminum will probably lead to cost reductions

Reported Applications

The aluminum IVD process is used by a large number of U S Department of Defense contractors, and is incorporated into several military and industrial specifications as an option for cadmium plating Applications include pneumatic line fittings, steel fasteners and rivets, electrical bonding, EMI and RFI shielding, and coatings for plastic/composite materials (Nevill, 1993) Non-military applications include the coating of steel houses for trolling motors used on fishing vessels and for exhaust manifold headers on high-performance speed boats

Availability

The aluminum IVD process was developed in large part by the McDonnell Aircraft Company (a subsidiary of McDonnell-Douglas) of St. Louis, Missouri The trade name of the process equipment developed by McDonnell is the Ivadizer In 1987, McDonnell sold the rights to the process to the Abar-Ipsen Co of Bensalem, Pennsylvania. Abar-Ipsen

224

currently manufactures the equipment. Other companies have licenses to use the technology

Operational and Product Benefits

Health and safety risks can be greatly reduced when IVD is used in place of cadmium electroplating Cadmium is a significant health hazard, as is the cyanide bath often used in cadmium electroplating

For many applications, a chromate conversion coating is used on top of both cadmium and aluminum IVD coatings to improve corrosion resistance and adherence of subsequent organic coatings The use of chromate conversion coatings generates some hazardous waste Switching to an aluminum IVD process, however, should not increase the use of these coatings

The greatest advantage of aluminum IVD is that the process significantly reduces the generation of hazardous wastes, and potentially eliminates the need for special pollution control systems Some waste is generated in alkaline cleaning and stripping although these wastes can be neutralized and disposed of as special (i e non-hazardous) wastes Other potential advantages of aluminum IVD coatings are listed below (Nevill, 1993)

- Outperforms cadmium coatings in preventing corrosion in acidic environments
- Can be used at temperatures up to 925°F, as compared to 450°F for cadmium coatings
- Can be used to coat high-strength steels without danger of hydrogen embrittlement Unlike cadmium electroplating, the aluminum IVD process does not expose the substrate to hydrogen gas
- Can be used in contact with titanium without causing solid metal conversion problems
- Can be used in contact with fuels
- Superior to the vacuum-applied cadmium process in resisting particle impact (e g , can withstand burnishing pressures up to 90 psi as compared to 40 psi for vacuum-applied cadmium coatings)
- Permits coatings of several mils compared to about 1 mil for electroplated and vacuum-applied cadmium coatings, increasing corrosion resistance

- Provides better uniformity of coatings on the edges of parts than does electroplating

Hazards and Limitations

Some of the disadvantages of IVD coatings are

- It is difficult to coat the interiors of blind holes or cavities that have a depth greater than their diameter

- Compared to cadmium, aluminum IVD coatings have a higher electrodeposit coefficient of friction as well as inadequate lubricity Application of a lubricant is sometimes required for proper torque-tension of fasteners When lubricants cannot be used, inadequate lubrication might be a significant limitation

- Unlike cadmium, aluminum IVD cannot be combined with nickel to provide an erosion-resistant surface

- Unlike electroplating, there is no simple way to repair damaged aluminum IVD coatings

- Aluminum IVD is slower than cadmium electroplating (above a certain level of plating throughput) due to capacity limits of the IVD system For high-strength parts, however, reduced speed is not an issue because these parts would have to undergo hydrogen embrittlement relief after cadmium electroplating

- Parts coated by aluminum IVD do not require time-consuming heat treatment for hydrogen embrittlement (hydrogen stress cracking) relief, thus compensating for the slower application speed

- Because IVD aluminum coatings have a columnar structure and tend to be porous, parts might need to be peened with glass beads to improve fatigue and corrosion resistance Peening can add to production costs and slow productivity Cadmium electroplating has neither of these disadvantages

State of Development

The IVD aluminum coating process is a mature technology that has been commercially available for a decade and is suitable for specialized applications

226

REFERENCES

Hinton, B R W and W J Pollock 1991 Ion vapour deposited aluminum coatings for the corrosion protection of high strength steel Aeronautical Research Laboratories (Australia) *Government Research Announcements and Index* April 52 pp

Hinton B R W et al 1987 Ion vapor deposited aluminum coatings for corrosion protection of steel *Corrosion Australasia* June pp 15 20

Holmes, V.L., D.E Muehlberger, and J J Reilly 1989 The substitution of IVD aluminum for cadmium Final report EG&G Idaho Report No AD A215 633/9/XAB 201 pp

Lansky, D 1993 IVD eliminating tank electroplating solutions for cadmium *Plating and Surface Finishing* January 1993 pp 20-21

Legge, G 1992 High volume automotive-type aluminum coatings by ion vapor deposition *SUR/FIN '92* Vol 1 Atlanta, GA (June 22-25) Orlando, FL American Electroplaters and Surface Finishers Society Inc

Nevill, B T 1993a. An alternative to cadmium ion vapor deposition of aluminum *Plating and Surface Finishing* January 1993 pp 14-19

Nevill, B T 1993b Diverse applications of IVD aluminum *Proceedings of the 36th Annual Technical Conference*, Dallas TX Albuquerque NM Society of Vacuum Coaters pp 379-384

Nevill B T 1992 Ion vapor deposition of aluminum Atlanta, GA (June 22 25) Orlando FL American Electroplaters and Surface Finishers Society, Inc

Ressl R and J Spessard Evaluation of ion vapor deposition as a replacement for cadmium electroplating at Anniston Army Depot Final Report. IT Environmental Programs *Government Research Announcements and Index* May 128 pp

PHYSICAL VAPOR DEPOSITION (PVD)

Pollution Prevention Benefits

Hexavalent chromium is extremely toxic and is a known carcinogen Health and safety considerations as well as rising disposal costs have prompted the plating industry to consider alternatives for coating processes that involve hexavalent chromium Physical vapor deposition (PVD) of alternative materials is one candidate for replacing chromium electroplating

REFERENCES

Hinton, B R W and W J Pollock 1991 Ion vapour deposited aluminum coatings for the corrosion protection of high strength steel Aeronautical Research Laboratories (Australia) *Government Research Announcements and Index* April 52 pp

Hinton, B R W et al 1987 Ion vapor deposited aluminum coatings for corrosion protection of steel *Corrosion Australasia* June pp 15-20

Holmes, V.L., D.E Muehlberger, and J J Reilly 1989 The substitution of IVD aluminum for cadmium Final report EG&G Idaho Report No AD-A215 633/9/XAB 201 pp

Lansky, D 1993 IVD eliminating tank electroplating solutions for cadmium *Plating and Surface Finishing* January 1993 pp 20-21

Legge, G 1992 High volume automotive-type aluminum coatings by ion vapor deposition *SUR/FIN '92* Vol 1 Atlanta, GA (June 22-25) Orlando, FL American Electroplaters and Surface Finishers Society, Inc

Nevill, B T 1993a. An alternative to cadmium ion vapor deposition of aluminum *Plating and Surface Finishing* January 1993 pp 14-19

Nevill, B T 1993b Diverse applications of IVD aluminum *Proceedings of the 36th Annual Technical Conference*, Dallas, TX Albuquerque NM Society of Vacuum Coaters pp 379-384

Nevill, B T 1992 Ion vapor deposition of aluminum Atlanta, GA (June 22-25) Orlando, FL American Electroplaters and Surface Finishers Society, Inc

Ressl, R and J Spessard Evaluation of ion vapor deposition as a replacement for cadmium electroplating at Anniston Army Depot Final Report. IT Environmental Programs *Government Research Announcements and Index* May 128 pp

PHYSICAL VAPOR DEPOSITION (PVD)

Pollution Prevention Benefits

Hexavalent chromium is extremely toxic and is a known carcinogen Health and safety considerations as well as rising disposal costs have prompted the plating industry to consider alternatives for coating processes that involve hexavalent chromium Physical vapor deposition (PVD) of alternative materials is one candidate for replacing chromium electroplating

How Does it Work?

PVD encompasses several deposition processes in which atoms are removed by physical means from a source and deposited on a substrate Thermal energy and ion bombardment are the methods used to convert the source material into a vapor

Operating Features

The thoroughly cleaned workpiece is placed in a vacuum chamber, and a very high vacuum is drawn The chamber is heated to between 400 and 900°F, depending on the specific process A plasma is created from an inert gas such as argon The workpiece is first plasma-etched to further clean the surface The coating metal is then forced into the gas phase by one of the three methods described below

- Evaporation
- Sputtering
- Ion plating

Evaporation

High-current electron beams or resistive heaters are used to evaporate material from a crucible The evaporated material forms a cloud which fills the deposition chamber and then condenses onto the substrate to produce the desired film. Atoms take on a relatively low energy state (0 2 to 0 6 eV) and the deposited films, as a result, are not excessively adherent or dense Deposition of a uniform coating may require complex rotation of the substrate since the vapor flux is localized and directional Despite this, evaporation is probably the most widely used PVD process

Sputtering

The surface of the source material is bombarded with energetic ions, usually an ionized inert gas environment such as argon The physical erosion of atoms from the coating material that results from this bombardment is known as sputtering The substrate is placed to intercept the flux of displaced or sputtered atoms from the target. Sputtering deposits atoms with energies in the range of 4 0 to 10 0 eV onto the substrate Although sputtering is more controllable than evaporation it is an inefficient way to produce vapor Energy costs are typically 3 to 10 times that of evaporation

Ion plating

Ion plating produces superior coatings adhesion by bombarding the substrate with energy before and during deposition Particles accelerate towards the substrate and arrive with energy levels up to the hundreds of eV range These atoms sputter off some of the substrate material resulting in a cleaner, more adherent deposit. This cleaning continues as the substrate is coated The film grows as over time because the sputtering or cleaning rate

229

Podob, M and J H Richter 1992 CVD and PVD hardcoatings for extending the life of tools used in the stamping industry Proceedings *Manufacturing Solutions*, v 2 Nashville, TN (Feb 23-26) Richmond Hts, OH Precision Metalforming Association

Russell, T W.F , B N Baron, S C Jackson, and R.E Rocheleau 1989 Physical vapor deposition reactors *Advances in Chemistry Series* Washington, DC ACS, Books and Journals Division pp 171-198

Vagle, M C and A.S Gates 1990 PVD coatings on carbide cutting tools *High Speed Machining Solutions for Productivity* San Diego, CA (Nov 13-15) Materials Park, OH ASM International

Zega, B 1989 Hard decorative coatings by reactive physical vapor deposition - 12 years of development. *16th International Conference on Metallurgical Coatings* (ICMC), Part 2, San Diego, CA (April 17-21) In Surface and Coatings Technol 39(40) 507-520

CHROMIUM-FREE SURFACE TREATMENTS FOR ALUMINUM AND ZINC

Description

One of the many uses of chromium in the metal finishing industry is for conversion coatings, which are used to treat nonferrous metal surfaces (mainly magnesium, aluminum, zinc, and cadmium) for corrosion protection or to improve adhesion of subsequent organic coatings Unfortunately, chromates, the form of chromium used for treatment, are carcinogenic and highly toxic Small amounts of chromic acid or potassium dichromate will cause kidney failure, liver damage blood disorders and eventually death Prolonged skin exposure can cause rashes, blisters, and other dermatological problems Chromate mists entering the lungs may eventually cause lung cancer

These health and safety considerations and the increasing cost of disposal of chromium-containing finishing wastes have prompted users to look at alternatives to treatment of aluminum, zinc, and other substrates with chromates Although a number of alternative treatments have been examined, very few provide even close to the corrosion protection afforded by chromate conversion coatings Even fewer have been developed to the point where their commercial viability can be assessed

Sulfuric acid anodizing can substitute for some chromium conversion coatings, although the coatings are more brittle and significantly thicker than chromare films

One of the few commercially proven, non-chromate surface treatments for aluminum is an inorganic conversion coating based on zirconium oxide

This treatment usually involves immersion of the substrate in an aqueous solution containing a polymeric material and a zirconium salt. The zirconium deposits on the surface in the form of a zirconium oxide These coatings have been used on aluminum cans for some time, but they have not been tested in the kind of environments in which chromate conversion coatings are typically used Wider application of this coating must await this type of testing

Another process showing promise is the SANCHEM-CC chromium-free aluminum pretreatment system developed by Dr John Bibber of Sanchem, Inc This process can be summarized as follows

> *Stage One*—Use of boiling deionized water or steam to form a hydrated aluminum oxide film
>
> *Stage Two*—Treat in proprietary aluminum salt solution for at least 1 minute at 205 °F or higher
>
> *Stage Three*—Treat in a proprietary permanganate solution at 135 to 145 °F for at least one minute

A fourth stage of the process exists for cases where maximum corrosion resistance is required for certain aluminum alloys he developers claim that the film produced by this process closely matches the performance of a chromate conversion process

A recent chrome-free post-rinse process has been developed for use on phosphated steel, zinc, and aluminum surfaces prior to painting The new rinse, known as Gardolene VP 4683, contains neither hexavalent or trivalent chrome It contains only inorganic metallic compounds as the active ingredient The rinse is applied at temperatures ranging to 100 °F and at a slightly acidic pH The manufacturer describes tests showing corrosion protection and paint adhesion equal to that of hexavalent chrome (Finishers' Management, 1990)

Some of the other possible alternatives to chromate conversion coatings that have been examined are molybdate conversion coatings, rare earth metal salts, silanes, titanates, thioglycollates, and alkoxides These alternatives are discussed in detail in Hinton (1991)

REFERENCES

Finishers' Management, 1990 Chrome free passivating post-rinse for phosphate coatings reduces toxicity May, 1990 pp 51-52

Hinton, 1991 Corrosion prevention and chromates the end of an era? *Metal Finishing* Part I, September pp 55-61 Part II, October pp 15-20

METAL SPRAY COATING

Description

Metal spray coating refers to a group of related techniques in which molten metal is atomized and directed toward a substrate with sufficient velocity to form a dense and adherent coating Metal spray coating has been used in a wide variety of applications, as shown in Table 5 The technique avoids use of plating solutions and associated rinses, thereby reducing wastes However, the parts to be sprayed still need to be cleaned prior to spraying

The individual techniques vary mainly in how the coating is melted and in the form of the coating prior to melting The three basic means for melting the metal are as follows

Molten Metal—The metal is heated by some suitable means (either resistance heating or a burner) and then supplied to the atomizing source in molten form

Fuel/Oxidant—Oxygen/acetylene flames are typically used The metal melts as it is continuously fed to the flame in the form of a wire or powder The flame itself is not the atomizing source Instead, the flame is surrounded by a jet of compressed air or inert gas that is used to propel the molten metal toward the substrate

Electric arc—In this method an electric arc is maintained between two wires that are continuously fed as they melt at the arc Compressed air atomizes the molten metal at the arc and propels it toward the substrate DC plasma arc spraying and vacuum plasma spraying are variations of this technique in which an inert gas (usually argon) is used to create a plasma between the electrodes

The technologies for thermal spraying of metals are well developed, but they tend to have their own market niche and are not typically thought of as a replacement for electroplating As the costs of hazardous waste treatment and disposal rises, however, this family of techniques may become cost-effective replacements for coating applications currently performed by electroplating The coatings can be applied to a wide range of substrates, including paper, plastic, glass metals, and ceramics with choice of suitable materials and control of the coating parameter

232

Table 5 Applications of thermal spray

Wear resistance	Metals carbides ceramics and plastics are used to resist abrasion erosion cavitation friction and fretting Coating hardness range from < 20 to > 70 Rc are attainable on practically any substrate
Dimensional Restoration	Coatings can be applied up to 0 100 inch thick to restore worn dimensions and mismachined surfaces
Corrosion Resistance	Ceramics metals and plastics resist acids and atmospheric corrosion either by the inert nature of the coating or by galvanic protection Nonporous coatings must be applied
Thermal Barriers	Zirconia (ZrO_2) coatings are applied to insulate base metals from the high-temperature oxidation thermal transients and adhesion by molten metals
Abrasion	Softer coatings such as aluminum polyester graphite or combinations are used for clearance control allowing rotating parts to 'machine in" their own tolerance during operation
Dielectrics	Alumina (Al_2O_3) is generally used to resist electrical conductivity These coatings have a dielectric strength of 250 V/mil of coating thickness
Conduction	Materials are selected for their intrinsic thermal or electrical conductivity Copper aluminum and silver are frequently used for this application
RFI/EMI Shielding	These conductive coatings are designed to shield electronic components against radio frequency or electromagnetic interference Aluminum and zinc are often selected
Medical Implants	Relatively new porous coatings of cobalt-base titanium-base or ceramic materials are applied to dental or orthopedic devices to provide excellent adhesive bases or surfaces for bone ingrowth

Source Kutner (1988)

REFERENCES

Kutner, Gerald 1988 Thermal spray by design *Advanced Materials & Processes* October pp 63-68

Thorpe, Merle L 1988 Thermal spray applications grow *Advanced Materials & Processes* October pp 69-70

Herman Herbert. 1990 Advances in thermal spray technology *Advanced Materials & Processes* April pp 41-45

234

SECTION FOUR
EMERGING TECHNOLOGIES

Introduction

Three emerging clean process changes for metal finishing are presented in this section

- Nickel-tungsten-silicon carbide plating to replace chromium coatings
- Nickel-tungsten-boron plating to replace chromium coatings
- In-mold plating to replace electroless plating followed by electrolytic plating

NICKEL-TUNGSTEN-SILICON CARBIDE PLATING

Description

The nickel-tungsten-silicon carbide (Ni-W-SiC) composite electroplating process is a patented process (Takada, 1990) that can be used to replace functional (hard) chromium coatings in some applications Nickel and tungsten ions become absorbed on the suspended silicon carbide particles in the plating solution The attached ions are then adsorbed on the cathode surface and discharged The silicon carbide particle becomes entrapped in the growing metallic matrix

The composition and operating conditions for the Ni-W-SiC plating bath are given in Table 6

Chromium electroplating processes generate toxic mists and wastewater containing hexavalent chromium Hexavalent chromium has a number of toxic effects including lung cancer and irritation of the upper respiratory tract, skin irritation and ulcers These toxic emissions are coming under increasingly stringent regulations and are difficult to treat and dispose of In addition to hazardous waste reduction, the Ni-W-SiC process has the following benefits

Higher Plating Rates—The Ni-W-SiC process exhibits much higher plating rates than for chromium. Plating rates ranged from 1 7 to 3 3 mils/hr at 300 ASF, compared to the typical hard chromium plating rate of less than 1 mil/hr

Higher Cathode Current Efficiencies—Current efficiencies are approximately double those for chromium plating Current effi-

ciencies range from 24 percent to 35 percent, whereas typical chromium plating current efficiencies range from 12 percent to 15 percent

Table 6 Composition and operating conditions for Ni-W-SiC composite plating

Composition	Operating conditions
Nickel sulfate $NiSO_4$ $6H_2O$	30 40 g/l
Sodium tungstate Na_2WO_4 $2H_2O$	55 - 75 g/l
Ammonium citrate $NH_4HC_6H_5O_7$	70 - 110 g/l
Silicon carbide (0 8 - 1 5 um particles)	10 - 50 g/l
pH (adjust with ammonium hydroxide or citric acid)	6 0 - 8 0
Bath temperature	150 - 175°F
Cathode current density	100 - 300 ASF

Better Throwing Power—Cathode current efficiencies for the Ni-W-SiC process decrease with increasing current density This results in much better throwing power than for chromium plating In chromium plating baths, current efficiency increases with current density which results in poor throwing power

Better Wear Resistance—Precipitation-hardened and relief-baked Ni-W-SiC composite coatings all showed better wear resistance than a chromium coating in tests using a Taber Abraser

The main disadvantage of Ni-W-SiC process uncovered so far is that the plating bath is more susceptible to metallic and biological contamination As a result many questions remain to be answered before widespread use will occur Some of the unknowns include

- Susceptibility of coated parts to hydrogen embrittlement
- Fatigue life of coated parts
- Corrosion resistance of coated parts
- Maximum thickness of coating before cracking or flaking occurs
- Effect of coating parameters on internal stresses in deposit

236

- Lubricity of coated parts
- Maximum service temperature for coating
- Stripping techniques for coated parts
- Processing techniques for promoting adhesion to various surfaces
- Grinding characteristics
- Ability to plate complex shapes
- Repair of damaged coatings
- Facility requirements

REFERENCES

Takada, 1990 Method of nickel-tungsten-silcon carbide composite plating U S Patent 4,892,627 January

Takada, K 1991 Alternative to hard chrome plating SAE (Soc Automotive Engineers) 100 24-27

NICKEL-TUNGSTEN-BORON ALLOY PLATING

Description

Following several years of development, a new chromium alternative based on an alloy of nickel, tungsten, and boron has been recently introduced (Scruggs et al , 1993) A family of these alloys is patented under the trade name AMPLATE Properties for one specific alloy, known as AMPLATE "U" have been reported by the developers in the literature This alloy consists of approximately 59 5 percent nickel, 39 5 percent tungsten, and 1 percent boron

Unlike most metals which exhibit a crystalline structure at ambient temperatures, the AMPLATE alloys are structureless Metals of this type are often described as "amorphous" and have ' glasslike" properties that render substrate surfaces smooth and free of the defects that are exhibited by lattice-structured metals Because of the smoothness and hardness of their surfaces, amorphous metals have excellent corrosion and abrasion resistance properties

Properties

The properties of this alloy and its advantages as a coating are summarized as follows (Scruggs et al , 1993)

Appearance—The alloy is reflective and has an appearance of bright metal similar to chromium, bright silver, or bright nickel Being amorphous, it adopts the surface characteristics of the substrate being coated (e g , etching, patterning, or irregularities on the substrate surface will show through the coating)

237

Hardness—When deposited, the Ni-W-B alloy has a hardness of about 600 Vickers Heat treatment for 4 hours at 60°F will raise the hardness to about HV1000 Other properties are unaffected

Abrasion/Wear Resistance—The alloy compares comparably to chromium and electroless nickel In one test, rollers were plated with chromium and the AMPLATE U alloy and rotated at 600 and 700 RPM with a load of 102 Newtons The chromium coating failed within 60 to 100 minutes while at the end of 1300 minutes the alloy showed little oxidative wear

Corrosion—The alloy exhibits corrosion resistance properties far superior to those of chromium In testing, pieces coated with chromium were immersed in a 5 percent NaCl brine acidified with acetic acid to pH 2 and saturated with hydrogen sulfide Following seven days of immersion, the chromium was completely stripped and the substrate had been heavily attacked A similar coating of the U alloy showed no signs of corrosion

Ductility—The coating exhibits surprising ductility In one test, a foil of the coating was obtained by dissolving the substrate The foil could be tied in a loose knot and ben 18 degrees on itself Plated items were successfully bent 9 degrees over a quarter-inch mandrel with no separation of the plating material

Heat Resistance—The structure of the amorphous coating is unaffected by heat to at least 1200°F The finish remains bright upon short exposure to temperatures of 400°F Treatment in air can lead to yellowing due to oxidation of the tungsten This coloration can be removed by polishing or avoided by heat treating in an inert gas environment.

Operating Conditions

The plating system is operated at temperature range of 115°F to 125°F and a pH of 8 2 to 8 6 Optimum concentrations of Ni, W, and B are maintained by adding liquid concentrates containing dissolved salts of the three metals

Deposition Characteristics

Two versions of the alloy solution are available (UA and UA-B), the difference in the 'B formulation being the addition of a brightener and a lower metal concentration This results in a deposition rate approximately half that of UA. The UA solution is recommended for heavier applications where the surface will be subsequently dimensioned by grinding and polishing The UA-B solution will produce a fully bright coating of ten mils thick or more and can be used for both decorative and engineering purposes Thinner deposits of 1-2 mils over bright nickel have the appearance of chromium but with superior corrosion resistance

238

Equipment Requirements

Standard plating equipment is suitable for plating with the Ni-W-B alloy Automated chemical feed equipment is recommended for optimizing concentrations of ammonia and the metals

Surface Preparation

Extra attention is needed to ensure that parts to be plated are absolutely clear of contaminants When plating with amorphous coatings, even minute defects can become stress inducing points or pore generating sites

Cost and Efficiency

Coating efficiency is around 38 percent or three times that of chromium This reduces energy and plating costs Savings are also generated due to reduced need to ' grind back chromium to obtain suitable surfaces and sizes

Environmental

The plating solution is only slightly alkaline and is operated at relatively low temperature There are virtually no hazardous or carcinogenic emissions associated with the process Mild ammonia odors can be controlled through proper ventilation

Because the UA-B deposit remains bright and smooth at thicknesses up to ten mils or more, the need for grinding and polishing is greatly reduced In addition to reducing costs, this also minimizes atmospheric contamination

REFERENCES

Scruggs, D , J Croopnick, and J Donaldson 1993 An electroplated nickel/tungsten/boron alloy replacement for chromium 1993 AESF Symposium on the Search for Environmentally Safer Deposition Processes for Electronics

IN-MOLD PLATING

Description

In-mold plating is the name given to a process developed and patented by Battelle, Columbus, Ohio This process combines high-speed plating and injection molding to apply metal coatings to plastics in the following manner First the mold is cleaned and prepared, then a plating fixture is placed on top and a metal, such as copper or zinc, is applied by a high-speed plating technique When the required thickness has been reached, the mold cavity is emptied, the deposit is rinsed and dried in situ, and the coated mold is transferred to the injection molding machine A plastic is then injected, the mold cooled and a metal-coated plastic part ejected The plastic typically is a thermosetting resin, but it may be filled with particles or fibers to improve stability or toughness Similarly, a foamed plastic can be used

239

because the coated mold surface defines the surface of the finished part, not the plastic material Besides injection molding, the process can be adapted for compression molding The process has several advantages

- It has fewer process steps than conventional techniques for plating plastics
- It does not generate any waste etching or sensitizing solutions that contain organics, heavy metals, or precious metals
- It avoids the use of electroless copper to initially metalize the surface
- It deposits only the amounts of metal required and only in the areas that require coating, thus it conserves materials and energy
- It provides a very broad range of metal coating and plastic combinations that can be processed

While potentially reducing and minimizing some waste streams, the process itself only replaces the need for etching and sanitizing the plastic part prior to plating It still utilizes a plating process to plate the mold (and therefore will generate wastewater and wastes to dispose of) Skillful fixturing is required to deposit an adequate plate or sequence of plates into the mold Improper cleaning and preparation can cause the metal to stay on the mold, requiring chemical stripping (generates waste) and possibly a need for polishing

The appearance of the final product is directly related to the surface condition of the mold itself since the plating replicates the surface The appearance therefore will not match the luster of bright nickel plated plastic parts that are processed conventionally Also, the process is labor intensive and very difficult and expensive to automate It has only specialized applications

Although in-mold plating is not available commercially several companies are exploring its use in such applications as decorative finishes, plumbing and architectural hardware and EMI/RFI protection for electronic components

REFERENCES

PF 1983 New way to plate on plastics *Products Finishing* March pp 75-76

AMM 1986 Battelle adopts technology for in-mold plating *American Metal Market* December 1 p 8

240

SECTION FIVE
POLLUTION PREVENTION STRATEGIES

Introduction

Alternate technologies are presently available, and others are under development for the reduction or elimination of use of cadmium cyanide, chromium, and copper/formaldehyde in specific metal finishing applications These alternate technologies tend to fall into two main categories

Alternate finishes—(e g , aluminum, zinc or zinc alloys, and nickel tungsten-silicon carbide) replace traditional cadmium and chromium finishes

Process substitutions—(e g , Blackhole Technology, ion vapor deposition, physical vapor deposition, in-mold plating, and metal spray) use different technologies for metal finishes

Both types of changes have the potential to reduce costs (through reduction in waste volumes or toxicity and associated savings in disposal costs) and improve environmental health and safety Barriers to acceptance of these alternate processes often include high capital cost, higher maintenance costs, high levels of required skill, difficulty in automation or bulk processing of large volumes of parts, and inferior properties of the alternate process coating

Cadmium plating

The vast majority of cadmium plating is performed using cyanide-based chemistry for a number of reasons, including

- Ability to cover complex shapes somewhat uniformly (high throwing power)
- High tolerance to impurities
- High tolerance to improperly cleaned surfaces
- Ability to obtain a porous deposit that allows for hydrogen embrittlement relief
- Ability to obtain a ductile deposit at high thicknesses
- High adhesion to substrates

A growing number of platers have successfully substituted non-cyanide cadmium plating solutions based on proprietary chemistries substituting sulfate and/or chloride salts and organic additives for the cyanide

Cyanide-based plating solutions

Alternates to cyanide processes for other plating solutions are also available and in the developmental stage For example, significant progress has been made in developing mildly alkaline, non-cyanide copper plating processes for application in both rack and barrel plating on ferrous parts, on zinc die castings, and on zincated aluminum die castings These proprietary

processes are available from at least four commercial suppliers (Lea-Renal, Harshaw-Atotech Enthone-OMI, and Electrochemical Products) In addition to the cyanide free alkaline copper and the acid cadmium processes, non cyanide formulations for plating gold and silver have been available for many years Additional progress in process control and lowering of operating costs is required to allow these substitutes to more readily compete with the cyanide based formulations

Chromium plating

To find a suitable substitute for chromium, an alternate coating must be found that offers the combination of benefits provided wear, corrosion protection, ability to hold oil/lubricants in microcracks, high temperature wear resistance, low coefficient of friction, ability to produce very thick deposits (10 mils and more), ease of solution maintenance, ease of embrittlement relief (due to micro-cracked structure), ease of stripping rejects, and high tolerance of impurities

There is no single other metallic coating that offers the above combination of beneficial properties and processing advantages However, alternative coatings presently in the research and pilot plant stage, show promise in providing some of the noted properties, and can be used as substitutes in selected applications For example, advanced ceramic and composite materials have been tested as replacements for chromium plated parts in internal combustion engines Hard coatings such as titanium nitride have been applied using sophisticated (expensive) equipment that produces the coating by condensing vaporized metals inside a vacuum chamber

The deposits obtained from these alternatives are normally very thin and can exceed chromium in hardness, but do not match up to chromium electroplate in economy, ability to produce thick coatings, corrosion resistance, ease of stripping reject parts, or ability to deposit into deep recesses

Nickel-Tungsten-Silicon Carbide and Nickel-Tungsten-Boron Alloy Plating

A significant effort is being made in the aerospace industry to evaluate chromium substitutes produced from alternate aqueous electroplating processes The main focus of these efforts is the application of an alloy of nickel and tungsten containing finely dispersed particles of silicon carbide, molybdenum plating, and an alloy of nickel-tungsten-boron The nickel tungsten alloy electrodeposits offer better wear resistance and coefficient of friction than chromium plate The plating solution is approximately 50 percent to 100 percent faster in plating speed than typical functional chromium plating solutions (although one supplier of proprietary chromium plating chemicals has developed a process that would be 20 percent faster that the nickel tungsten alloy solution)

A primary concern of the nickel-tungsten substitutes is that they contain ingredients that have similar health/environmental concerns as hexavalent chromium. Additionally, these substitutes utilize a plating solution that produces a wastewater that requires treatment, the solutions themselves are

242

subject to biological decomposition and offer current efficiencies that are only marginally more efficient that functional chromium plating formulations The tungsten compound used in the process (sodium tungstate) is very expensive and not readily available Parts that have been plated with nickel-tungsten alloys are typically very difficult to strip if a defective deposit is placed, and the plating solution is more sensitive to impurities At least one of these processes (Ni-W-B) uses platinized titanium anodes encased in a membrane cell This is expensive and the membrane is subject to fouling, and expensive to replace Considerable process control problems can be encountered when attempting to deposit an alloy, especially one with three alloying elements (Ni-W-B)

Trivalent chromium solutions require much greater care in operation to minimize contamination by metallic impurities than hexavalent solutions These metallic impurities can affect the color of the deposit, and if not controlled to a steady state, the deposit will vary in color (darkness) from week to week When carefully controlled, these solutions are capable of producing thin chromium deposits for decorative parts that are equivalent in color, corrosion resistance, and abrasion resistance to thin deposits from hexavalent chromium plating solutions

Since decorative applications of chromium may be optional for some parts, those parts can also be engineered/designed to be functional in the absence of the chromium deposit. If the parts are molded from plastic, or formed/cast from stainless steel, they may not need plating at all to function and be "decorative" The surface of the molded plastic part would be much softer than a chromium plated part The stainless steel part would also be softer and would be far more expensive to produce than a part made from zinc and nickel chromium plated

Most other metals commonly used for consumer items (zinc, aluminum, carbon steel) require some form of protective coating, since those metals corrode to an unpleasant and possibly un-functional condition upon exposure to humidity, salt, water, and household chemical products Alternative finishes need to provide a pleasing appearance along with high corrosion resistance and (sometimes) high abrasion resistance in order to adequately replace a nickel-chromium electroplate

Hexavalent chromium

Hexavalent chromium compounds are also utilized in conversion coatings produced on aluminum, zinc, cadmium magnesium, copper, copper alloy, silver, and tin surfaces There are a number of other metal finishing operations that utilize solutions containing hexavalent chromium compounds, including phosphating and passivation of certain stainless steel alloys

Other solutions

The surface of aluminum parts can be converted to an oxide coating in a number of solutions, by making the part anodic (positively charged, direct

current) When fatigue failure and corrosion by trapped anodizing solution in crevices and faying surfaces is of concern, the anodizing solution is formulated from chromic acid, a hexavalent chromium compound

Some anodic coatings are further processed through a sealing operation consisting of an aqueous solution of sodium dichromate The sealing operation further enhances fatigue resistance and seals' the pores in the coating to enhance the corrosion resistance

APPENDIX 5

US EPA Guide to Cleaner Technologies - Organic Coating Replacements September 1994, Sections 2 and 4

CONTENTS

		Page
Section Two	Available Technologies	15
	High Solids Coatings, Solvent Borne	15
	Powder Coatings	25
	Waterborne Coatings	46
	Electrodeposition	63
	UV/EB Radiation Cured Coatings	67
Section Three	Emerging Technologies	79
	Vapor Injection Cure Coatings	80
	Supercritical Carbon Dioxide as Solvent	81
	Radiation Induced Thermally-Cured Coatings	84
Section Four	Pollution Prevention Strategy	85

246

SECTION TWO
AVAILABLE TECHNOLOGIES

Introduction

This chapter describes cleaner technologies available for the organic coating industry that can reduce emissions of VOCs In reducing VOCs these technologies may also reduce generation of hazardous wastes and decrease worker exposures to hazardous air emissions

HIGH SOLIDS COATINGS SOLVENT-BORNE

Pollution Prevention Benefits

High solids solvent borne coating systems were developed to reduce emissions of volatile organic compounds (VOCs) released during curing High solids coatings have been reformulated to meet regulated levels of VOCs while retaining the essential character of the low solids coating formulation High solids coatings typically contain 275 to 420 g VOC/l of liquid coating (2 3 to 3 5 lb/gallon) (Pilcher, 1988) High solids coatings currently available are generally similar to low solids coatings in their application curing and final film properties though there are important differences The major difference is the higher viscosity of the high solids formulation, which often leads to increased film thicknesses

A standard definition of high solids does not really exist in the coatings industry "High solids" coatings are generally considered to contain more than 80 percent solids while the term "higher solids" refers to coatings containing less than 80 percent solids but more than the 30 to 40 percent contained in low solids coatings (Munn 1991)

High solids paints have not made the inroads that other systems such as powder coatings have in replacing conventional coatings Particular problems include high viscosity viscosity changes due to temperature variation and storage stability Other issues are control of film thickness and the drying characteristics of the film

How Does it Work?

Creating a high solids formulation is not as easy as simply reducing the solvent concentration A reduction in solvent concentration without other changes lead to an unacceptably high level of viscosity Because polymer binders (resins) used in coatings have traditionally been of moderate to high molecular weight the molecular weight of the polymer must be lowered to retain acceptable viscosity Lowering the molecular weight of the polymer is problematic as unmodified low molecular weight polymers produce an unacceptable final dry film when normal curing times are applied To overcome performance limitations caused by these polymers additives often are used to increase cross-linking during curing However with chemical

247

modification polymers can retain good coating properties and lowered viscosity (Storey, 1987)

Types of High Solids Coating Systems

High solids solvent borne coatings fit into three general categories

- air/force dry
- baking
- two-component

Resin systems generally belong to one category, although some resins cross over between categories

Air/Force-Dry Coatings

Air/force dry coatings cure by exposure to moisture or oxygen Alkyd resins are most common in air-dry coatings Modified alkyds are also popular, while styrene siliconized and acrylic resins are less common Air-dry alkyds are termed oxidizing or auto-oxidizing because they cure in air without baking or the addition of a catalyst (Wicks, et al 1992)

These coatings cure at low temperatures below 180°F Low temperature ovens can be used to speed curing by evaporating the solvent more quickly Air-dry high solids coatings usually have longer drying, tack-free, and hardness curing times than their low solids counterparts These properties can alter production possibilities if the applicator needs to wait longer before handling parts For instance if the coating remains soft for a longer time than previously the coating may become scratched or damaged during handling operations This may necessitate rework which adds to the cost and increases the amount of pollution generated

The recent development of new resins has resulted in a range of fast-drying high solids air dry acrylics suitable for general metal finishing These resins are inexpensive offer excellent flow and drying properties good hardness durability and color and gloss stability and do not suffer from air entrapment or sagging Early air dry coatings contained highly volatile solvents causing the surface of the coating to dry first and trapping solvent underneath The result was pinholing or solvent-popping in the finished film (Ballway, 1992) These high solids acrylics are suitable for various metal finishing applications and have both indoor and outdoor uses

Bake Coatings

Bake coatings predominantly use acrylic and polyester resins although some alkyds and modified alkyds are also used These resin systems cure at high temperatures to form a crosslinked film Crosslinking agents such as

melamine-formaldehyde (MF) or blocked isocyanates are commonly used MF coatings are usually one pack systems catalyzed by a strong acid such as *p*-toluenesulfonic acid (Storey 1987) Latent or blocked catalysts are used for fast cure and good pot life with melamine formaldehyde crosslinked coatings

High solids resins based on alkyds or polyesters have low molecular weights and contain hydroxyl groups that can be crosslinked with melamine-formaldehyde resins

Blocked isocyanate urethane resins are often used as high solids binders for baking systems because of their outstanding performance properties and broad formulation latitude Urethanes based on blocked isocyanates require an elevated temperature to cure The polyisocyanates have surprisingly low viscosities which is an asset in high solids coatings Aliphatic polyisocyanate cross linking agents are recommended for superior weathering properties, especially their resistance to yellowing (Storey, 1987)

Temperatures in the range of 350°F to 400°F are needed to cure baking enamels requiring the use of high-temperature ovens

Two-Component Coatings

The name "two-component" refers to the presence of two separate coating solutions which are mixed together just before use "Two-component" is also known as "two pack" and "2K" (from the German word Komponent)

Two-component systems cure by a crosslinking reaction between the two components reactive resins or a resin and a catalyst Epoxies and polyurethanes are the most common two component coating systems Polyisocyanates serve as the crosslinking agents for polyurethanes (Wicks et al 1992)

Two pack polyol cured urethane resins are often used as high solids binders because of the excellent properties of the finished film and the low energy needed for curing Urethanes based on two component systems cure at lower temperatures than baking polyurethanes

Two-component polyol urethane coatings are suitable for metal finishing applications where outstanding film properties are required These coatings are also suitable for the automotive and machine tool industries because of their excellent resistance to solvents lubricants cutting oils and other chemicals Urethane clearcoats for automobile finishes for example provide hard wearing films with exceptional chemical and abrasion resistance

249

Urethane coating systems do pose some health and safety concerns For example, isocyanates are toxic and can affect the respiratory system Damage from low-level exposure is usually reversible however sensitization can occur Sensitization can be temporary or permanent Following chronic exposure to urethane coating systems permanent lung damage has been observed (Rees 1992) Stability and pot life of two component urethanes can also be problematic

Epoxy resin systems are the oldest form of high solids coating Two component thick film, solventless resin formulations for specialty applications have been available for many years

In a two-component reactive liquid coating system two low-viscosity liquids are mixed prior to entering the application system One liquid contains reactive resins, while the other contains an activator or catalyst that promotes polymerization of the resins Conventional airless or electrostatic spray equipment can be modified to accommodate new coating materials such as two component epoxies polyurethanes and polyesters The two components are fed into the spray gun through separate metering devices Flow control valves and cleaning valves are built into the spray unit to prevent the components from coming into contact with each other before release Two-component systems enable coatings to be applied without the use of a volatile organic solvent Some solvents might be used to clean up any unreacted liquids

High temperature ovens are not required for curing two-component coatings

Reactive Diluents

A class of compounds known as "reactive diluents" can replace some organic solvents with low molecular weight resins designed to react, crosslink and form an integral part of the coating The most important asset of reactive diluents is that they are VOCs when tested individually per EPA Method 24 but are not VOCs when the mixed coating is allowed to crosslink before subjecting it to EPA Method 24

Operating Features

As with conventional formulations high solids coatings can be applied using numerous methods including

- Brush or roller
- Pouring or flow-coating/curtain coating
- Dipping
- Spraying by low pressure equipment
- Spraying by high-pressure/air-assisted equipment
- Spraying by airless equipment

250

- Spraying by electrostatic equipment
- Spraying by high volume low pressure (HVLP) equipment
- Application by turbine bell or rotating disk

Spray Application Systems

Depending on the formulation high solids coatings may be of similar or greater viscosity than low solids coatings Traditionally high viscosity makes coatings difficult to atomize and achieve a uniform film thickness Today emerging formulations are tending towards lower viscosity and therefore easier spraying These new formulations may be based on new resin systems or additives which modify viscosity and rheology for easier spraying

Lower viscosity high solids coatings can be readily applied with all types of equipment such as air spray airless spray air-assisted airless HVLP or electrostatic spray High-solids coatings that have high viscosity (or that have been exposed to cold temperatures thereby raising the viscosity) are more problematic to apply with spray apparatus Spray equipment should be tested with the new coating to see if a suitable finish is obtained If necessary, fluid tips can be exchanged or new spray guns purchased

Spray application problems stemming from high viscosity are often solved by use of an in line paint heater to reduce viscosity The heater raises the fluid temperature thereby lowering the viscosity An alternative is to use a temperature controlled spray booth and set the temperature for reduced viscosity while still maintaining operator comfort

High volume low pressure (HVLP) and electrostatic spraying equipment are approaches to high efficiency application that reduce overspray loss and raise transfer efficiency HVLP uses low atomizing air pressures of less than 10 0 psi along with high volumes of atomizing air to apply paint with less velocity than standard air spray guns reducing losses from coating overspray Electrostatic guns charge the coating and then deposit it on parts which are grounded

Airless and air assisted airless spray systems are used to apply high solids coatings These systems use hydraulic pressure to atomize the coating into small droplets resulting in a fine spray

Other Application Equipment

High solids coating formulations with higher viscosities can be applied with electrostatic turbine bell or rotating disk atomization spray equipment Disk and bell turbine applicator systems are primarily used in production line applications With disk or bell applicators the coating is fed into a rotating

251

insulated disk or bell Centrifugal force causes the coating to spread to the outer edge of the bell or disk Turbine powered bells have rotational speeds of up to 50 000 RPM while disks can achieve speeds of up to 40 000 RPM The disk or bell has approximately 100 kV of electrostatic charge to ensure uniformity of the coating by improving atomization and transfer efficiency of the paint droplets

Surface Preparation

Surface preparation techniques need to be more thorough when using high solids coatings Low solids coatings contain substantial quantities of organic solvents which allow a certain amount of self-cleansing (or greater wetting) of the substrate Grease and other contaminants are wetted or dissolved by the solvent resulting in a cleaner surface on which the coating adheres High solids coatings do not have as great a self cleansing ability, therefore surface preparation must remove more of the grease and contaminants when using these coatings Cleaning with organic solvents would defeat the purpose of low-VOC high solids coatings Luckily other measures exist including aqueous cleaning systems abrasive blasting and other surface preparation like phosphating treatments See for example U S EPA (1993) Mounts (1993) and Wang and Merchant (1993) for alternatives to organic solvent cleaning

Required Skill Level

Although the application equipment is similar more operator skill and attention is needed when using high solids coatings, mainly because of problems of higher viscosity Substantial air temperature changes will alter coating viscosity and change film thickness unless the applicator can make adjustments Film thickness control is difficult, however, particularly on complex-shaped parts On complex shapes thickness variation of between approximately 1 and 7 mils is possible because of differing build up of coating due to changing spray angles A high solids coating with low viscosity and good rheology is easier to apply in a uniform thickness

Applications

Products Finishing

High solids VOC-compliant coatings have been used to replace low solids formulations in lining drum interiors at Russell-Stanley Corp , of New Jersey Coatings for steel drums need to have good chemical resistance Historically this resistance derived from high molecular weight resins however these formulations required significant solvent use to lower viscosity The VOC compliant formulation still uses high molecular weight resins for chemical resistance but sprayability is maintained by means of heating the coating to reduce viscosity Heating equipment for lowering viscosity was found to be

cheaper than alternatives such as exotic formulations or afterburners to incinerate VOCs (MP&C 1990)

High-speed turbine bell atomizers are being used to apply high solid coatings to zinc coated steel doors In addition to lower VOC emissions the new high solids coating formulations use lower curing temperatures which are required by the heat sensitive foam insulation cores now used in steel doors High solid coatings meet the highest adhesion rating in ASTM D 3359 and pass a 250 hr salt spray test per ASTM B 117 (Nelson 1988)

High solids polyurethane materials that meet MIL C832858 are available for use on aircraft and ground support equipment These high solids formulations which are formulated for electrostatic application (MP&C 1988) contain 340 g to 420 g VOC/l (2 8 lb/gal to 3 5 lb/gal) The pot life is reported to be 6 hr

High solids coatings are also used for aluminum extrusions, office furniture, appliances business machines containers and many other OEM applications

Automotive Applications

High solids coatings are also used as automotive primers topcoats basecoats and clearcoats Two-component polyurethane coatings are increasingly being used for clear topcoats on automobiles In comparison to conventional acrylic-melamine and alkyd melamine systems two-component systems offer many benefits including low solvent emissions high gloss and body flexibility and weather chemical and stone chip resistance In addition two-component polyurethane coatings cure at lower temperatures than baking systems reducing energy costs

Cost

Since high solids coatings use application equipment similar to low solids solvent borne coatings the capital cost for booths electrostatic spray applicators and curing ovens are approximately the same In fact many existing application systems can be used with minor or no modification for high solids coatings For low temperature applications or high viscosity high solids formulations paint heaters may be required VOC control equipment may be required if the high solids coating emits greater quantities of VOC than regulations allow

High solids coatings are slightly more expensive than conventional coatings per unit of reactive resin Preparation application cleanup and disposal costs are similar for high solids and low solids coatings A detailed comparison of the costs of high solids conventional powder and water-based coatings can be found in Hester and Nicholson (1989)

253

Benefits

Benefits of high solids coatings are

- They contain a lower concentration of solvents than conventional coatings reducing environmental odor safety and health problems
- The manufacture and curing of high solids coatings requires less energy than conventional coatings, reducing energy costs
- High solids coatings are easier to store than conventional coatings because of lower solvent concentrations reducing storage and handling costs
- High solids coatings produce films with greater thickness than conventional coatings allowing increased line speeds and reduced number of coats
- High solids coatings are compatible with application equipment and techniques used in conventional coating systems

Limitations

The disadvantages of high solids coatings include

- High solids coatings have a tendency toward excessive flow Coatings with higher solids content require lower viscosity resins creating a more serious problem of excessive flow When applied to a vertical surface high solids coatings also have a tendency to sag Many additives are available that control flow and prevent sagging in conventional formulations The effectiveness of these additives with high solids coatings, however has not been demonstrated The use of flow control additives can also result in additional problems, particularly gloss reduction
- High solids formulations produce films with increased thickness, which can blister during the baking process
- Since high solids coatings use low molecular-weight resins it is possible for these resins to become volatile at elevated curing temperatures resulting in reduced binder content poor film formation and greater VOC emission
- The oversprav of high solids paints tends to create a sticky mass whereas conventional coatings have a dry powdery oversprav As a result sprav booths become clogged creating severe collection and disposal problems

254

- The viscosity of high solids formulations is extremely sensitive to changes in temperature Temperature variations in the workplace can cause problems in spray application Thermostatic heating of the coatings in the pot or in-line might be necessary for easier application

- High solids coatings take a longer time to cure than conventional coatings increasing the opportunity for dirt pickup on the film Work areas therefore must be kept clean some form of air filtration is recommended

- Although high solids coatings use less organic solvents they do not completely eliminate solvents

- Two component high solids coatings have shorter pot lives than single component coatings

- Incinerators or carbon adsorber pollution control equipment might be needed when applying high solids coatings to meet VOC regulations

Tradeoffs

High solids coatings use application systems that are similar to those used with conventional solvent-based coatings easing the transition Both equipment operators and plant management prefer simple transitions rather than radical changes in equipment and procedures

Although high solids coatings offer reductions in VOC emissions these reductions are not as great as those gained with powder coatings many waterborne coatings or various other coating technologies

REFERENCES

Agostinho M 1985 *Proceedings of the Waterborne Higher Solids Symposium* 12 89

Ballway Bill 1992 What's new in high solids coatings *Metal Finishing* March p 21

Farmer, Richard N 1992 Low temperature cure baking enamels provide high solids alternative *Modern Paint and Coatings* June p 36

Ferrarini Dr James 1990 Reduced viscosity isocyanates high performance with low VOC *Modern Paint and Coatings* March p 36

Goldberg Daniel and Robert F Eaton 1992 Caprolactone polyols as reactive diluents for high solids *Modern Paint and Coatings* November, p 36

Hester Charles L and Rebecca L Nicholson 1989 Powder Coating Technology Update EPA-45/3 89 33 October

Luthra Sanjay and Dr Richard R Roesler 1994 High-build aliphatic polyurethane topcoats *Modern Paint and Coatings* February p 20

Maver W P 1990 High performance high solids coatings using solution vinyl resins *Journal of the Oil Chemists and Colourists Association* 1990(4) 159

Mounts Michael L 1993 Converting from vapor degreasing to the optimum alternative *Metal Finishing* August p 15

MP&C 1988 Low VOC coatings applications for military usage present major formulation challenge *Modern Paint and Coatings* 78(9) 35

MP&C 1990 Steel drum interiors use VOC compliant coating 1990 *Modern Paint and Coatings* November p 32

Munn R H E 1991 Towards a greener coatings industry resin developments *Journal of the Oil Chemists and Colourists Association* 1991(2) 46

Nelson Larry 1988 Door Market Opens to Low VOC Coatings *Products Finishing 53(3)* 48-53 December

Pilcher Paul 1988 Chemical Coatings in the Eighties Trials Tribulations and Triumphs *Modern Paint and Coatings 78(6)* 34-36

Rees S W 1992 Non-isocyanate two-pack coatings *Journal of the Oil Chemists and Colourists Association* 1992(3) 102

Smith Mark D 1990 Low VOC Coating Alternatives In *First Annual International Workshop on Solvent Substitution* p 237 244 Phoenix Arizona, December 4-7

Storey Robson F 1987 High Solids Coatings In Wilson Alan D John W Nicholson and Havard J Prosser eds Surface Coatings - 1 New York NY Elsevier Applied Science Publishers Ltd

Wang, Victor and Abid N Merchant 1993 Metal cleaning alternatives for the 1990s *Metal Finishing* April p 13

Weinmann Daniel J 1994 Low-VOC epoxy/polyamide maintenance coatings *Modern Paint and Coatings* February, p 24

256

Wicks Zeno W Frank N Jones and S Peter Pappas 1992 Organic coatings science and technology (Subtitled volume 1 film formation components and appearance) New York NY John Wiley & Sons inc

POWDER COATINGS

Pollution Prevention Benefits

Powder coatings are attractive from a pollution prevention standpoint because

- No solvents are used in the coating formulation
- Essentially all of the coating is applied to the substrate (high transfer efficiency)
- There is little or no hazardous waste to dispose of

How Does it Work?

Powder coating technology uses dry resin powders for coating substrates with thermoplastic or thermoset films The coating is formed after a layer of powder is applied with a powder coating spray gun or fluidized bed tank to the substrate and heated thereby melting the powder Automotive appliance finishing outdoor furniture manufacturing architectural and building industries all use powder coatings A major driving force in the growth of powder coatings is attributed to increasingly stringent environmental regulations (Major 1992)

Powder coatings usually are applied in a single coat The thickness of the coat is typically greater than that used with a solvent based finish Powder coatings use resins in dry powdered form without volatile organic solvents Volatile solvents are not needed because clean dry compressed air acts as the solvent or fluidization agent for the coating No VOCs are released because solvents are eliminated from the entire process Furthermore the coating equipment can be cleaned with compressed air eliminating the use of solvent in cleanup Lower solvent levels reduce worker exposure and fire and explosion hazards Because VOCs are eliminated expensive VOC destruction equipment (incinerators or carbon adsorbers) is not required

Hester and Nicholson (1989) present the following example to show the potential VOC reductions hievable with powder coatings A large conventional coating facility c vers 12 million ft²/yr of substrates with 1 2 mil-thick coats The plant uses a VOC treatment system with a 70 percent capture efficiency Emissions of VOC are approximately 38 tons/yr By comparison a powder coating facility using electrostatic application of polyester urethane resins will emit only 0 6 tons/yr of VOCs and avoids the need for emission control equipment

259

Operating Features

Many different resins are available for powder coating The two most general categories are thermoplastic and thermoset resins Table 6 compares the properties of various thermoplastic and thermoset resins

Thermoplastic resins

Thermoplastic resins form a coating but do not undergo a change in molecular structure These resins can be re melted after they have been applied Thermoplastic resins are used mainly in functional coatings such as thick protective coatings on dishwasher trays (Lehr 1991)

Examples of thermoplastic resins used in powder coating are

- Polyethylene
- Polypropylene
- Nylon
- Polyvinylchloride
- Thermoplastic polyester

These thermoplastic resins are designed for functional and protective uses not as a replacement of thin film coatings from solvent borne paints

Thermoset resins

Thermoset resins crosslink to form a permanent film that withstands heat and cannot be remelted These resins are ground into very fine powders that can be applied with a spray gun for thin film coatings They are used for decorative, protective, coatings in architecture on appliances, furniture, and elsewhere Because thermoset systems can produce a surface coating that is comparable to liquid coatings, most of the technological advancements in recent years have been focused on these resins (Lehr 1991)

There are five basic families of thermoset resins

- Epoxies
- Hybrids
- Urethane polyesters
- Acrylics
- Triglycidyl isocyanurate (TGIC) polyesters

Table 6 Summary of powder coating resin properties

	Resin Type				
Coating Property	Epoxies	Epoxy Urethane Hybrids	Urethane Polyesters	TGIC Polyesters	Acrylics
Hardness	excellent	excellent	very good	excellent	very good
Flexibility	excellent	excellent	very good	excellent	fair
Resistance to overbaking	fair	very good	very good	excellent	good
Exterior durability	poor	poor	very good	excellent	very good
Corrosion protection	excellent	excellent	very good	excellent	fair
Chemical resistance	excellent	excellent	very good	very good	very good
Thin coat	no	no	yes	no	no
Colors available	all	all	all	all	all
Clears available	yes	no	yes	yes	yes
Textures available	yes	yes	yes	yes	no

Source: Lehr (1991)

Epoxies—Epoxies have always been the staple of the powder coating industry. These materials cure at temperatures below 300°F, many around 260°F. Mechanical surface properties are excellent; their pencil hardness can reach 7H. Impact resistance is approximately 160 inch-pounds. These resins also can be bent around a 1/4 inch mandrel with no loss of adhesion. Corrosion resistance and chemical resistance is excellent with epoxy materials. Epoxies, however, have poor UV resistance and consequently are best suited to indoor applications (Lehr, 1991).

Hybrids—Hybrid materials are combinations of epoxy and polyester resins designed for a good mix of characteristics, although their UV resistance is still poor. The presence of polyester resins helps to slow down or reduce yellowing of the film that can be caused by overbaking.

259

Urethanes—Urethane polyesters are suitable for outdoor use because of superior exterior durability Urethane polyesters have very good surface properties (hardness flexibility, corrosion protection etc) although not quite as good as epoxies Urethanes can be applied in thin coats coats of 1 mil to 2 mils (25 microns to 50 microns) usually are recommended Most other powder coat resins need to be applied in heavier coats forming thicker films

Acrylics—Acrylics have very good to fair surface properties and are becoming more common in the U S Acrylic's good weatherability makes them suitable for exterior use

TGIC—TGIC polyesters incorporate the cross-linking agent triglycidyl isocyanurate TGIC resins produce films with excellent surface properties such as hardness flexibility exterior durability and corrosion and overbaking protection Coating thickness of 3 mils to 5 mils (75 microns to 125 microns) is recommended

Exposure to trimellitic anhydride (TMA) a monomer used in polyester resins has been reported to cause allergic reactions Hybrid resins can help to reduce these reactions TGIC resins for example, have been used alongside TMA-based powders in ratio of 70 30 to reduce the potential for allergic reactions (Reich 1993) TGIC-based resins, however have been under attack In Europe reduced occupational exposure limits (OEL) were recommended for TGIC powders as a result of *in vivo* mutagenicity tests In response several chemical companies have launched alternative hardeners including caprolactam blocked isophorone diisocyanate (IPDI) adducts (Loutz et al 1993)

As an alternative to blocked isocyanate cross-linking agents melamine resins mounted on polymer support materials can be used for curing solid polyester resins Advantages of these resins include lower curing temperatures lower hardener content and lower volatile emissions

The physical and chemical properties of the powder have to be carefully controlled The effectiveness of powder coating depends on obtaining a smooth, nonporous film Formation of a good coating free of voids pinholes and orange peel distortions depends on controlling the particle size distribution glass transition temperature melting point melt viscosity, and electrostatic properties Well controlled size distribution is important in achieving good powder packing on the surface

Application Methods

Application systems for powder coatings include

- Electrostatic spraying
- Tribocharge spraying
- Fluidized bed

These application techniques offer much higher transfer efficiency (TE) than wet spray liquid coating methods for two reasons An electrostatic charge causes an attractive force between the powder coating material and the substrate resulting in higher TE than non electrostatic solvent borne or waterborne spraying Second wasted powder can be readily reused Powder coating systems are designed to reclaim powder that has not formed part of the coating

Electrostatic spraying—The most commonly used powder coating method is electrostatic spraying Dry powder is applied to an unheated substrate and held in place by electrostatic force The substrate or primer coat must be electrically conductive A transformer supplies high voltage (typically 100 kV) low-amperage current to an electrode in the spray gun nozzle The current ionizes the surrounding air transferring a negative charge to the powder particles as they pass through the corona of ionized air The substrate to be coated is grounded, allowing powder particles to follow electric field lines and air currents from the gun to the substrate (see Figure 1)(Lehr 1991 Loutz et al 1993)

Compared to conventional air spraying of wet coatings electrostatic spraying achieves greater coverage of the substrate because the powder tends to wrap around corners and coat surfaces that are not "line-of-sight" with the spray gun This results in less overspray and consequently a higher transfer efficiency

The following shortcomings of electrostatic powder coating led to the development of tribocharging

(1) The thickness of the coating can be reduced on areas where the electric field is interrupted This phenomenon is caused by the Faraday cage effect which occurs when a hollow or other complex geometrical shape resembling a cage is found in the substrate This shape distorts the electric field lines causing uneven powder distribution

(2) Air ions can become trapped in the coating and build up a strong electrical field resulting in surface imperfections in the coating such as reduced thickness orange peel-like distortions and cratering (Loutz et al 1993)

261

Figure 1

Electrostatic Spray Gun for Powder Coating

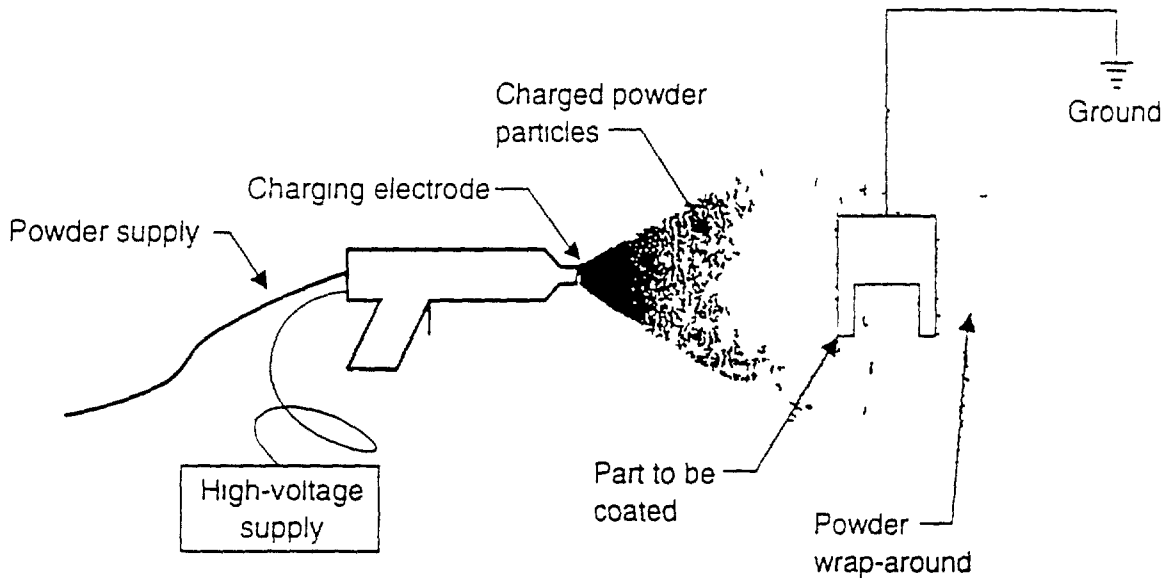

Source Eastern Research Group Inc

262

Tribocharging—The basic principle of tribocharging relies on friction between the powder and the spray gun The action of the powder flowing through the barrel of the gun generates a frictional charge on the powder The charged powder is carried by air stream to the substrate where it deposits and sticks due to electrostatic attraction Because there is no high-voltage system generating a field between the spray gun and the substrate the electric field is substantially smaller and the powder tends to follow air currents rather than field lines The smaller electric field results in a much reduced Faraday cage effect Consequently tribo guns produce smoother finishes allow deposition of thicker films and provide better coverage of intricately-shaped objects

The frictional charge is generated because the powder and the gun have different dielectric constants The tribocharging annular chamber is constructed of polytetrafluoroethylene (PTFE) Because PTFE has a low dielectric constant a positive charge will be imparted to most powders Some powders have low dielectric constants (e g mixtures of polyester and TGIC) and do not pick up electrical charges readily Therefore attempts have been made to modify the powder composition Small quantities of additives such as amines or quaternary ammonium phosphate salts increase the ability of the powder to accept positive charges Additives however can modify the reactivity of the powder and also create a non-uniform composition Uneven composition can lead to powder segregation and create problems with recycling Steps are underway to produce a polyesteramide that has increased ability to accept frictional charge reducing the need for additives (Loutz et al 1993)

Tribocharging is less complex than traditional electrostatic powder coating systems because it does not use high voltage transformers for applying the charge on the powder Tribocharging guns do wear out faster than regular guns because of the abrasion of the powder on the PTFE surfaces Because of the absence of electric field lines and a reduced dependence on leakage to ground of free ions tribo guns are more suitable for painting nonconductive surfaces

Fluidized beds—Fluidized beds provide another way of coating powder similar in action to a dip tank (see Figure 2) Powder rests in a tank or hopper which is fitted with a porous bottom plate Low pressure dry air is circulated through the bed causing the powder to attain a lofted fluid like state The workpiece is preheated usually to greater than 500°F then dipped into the tank Powder melts on contact with the part forming the coating This method allows fairly complete uniform coverage of complex shaped parts

Fluidized bed systems are primarily used to apply coatings of thermoplastic powder to thicknesses in the range of 10 to 30 mils The substrate is heated

263

Figure 2

Fluidized Bed for Powder Coating

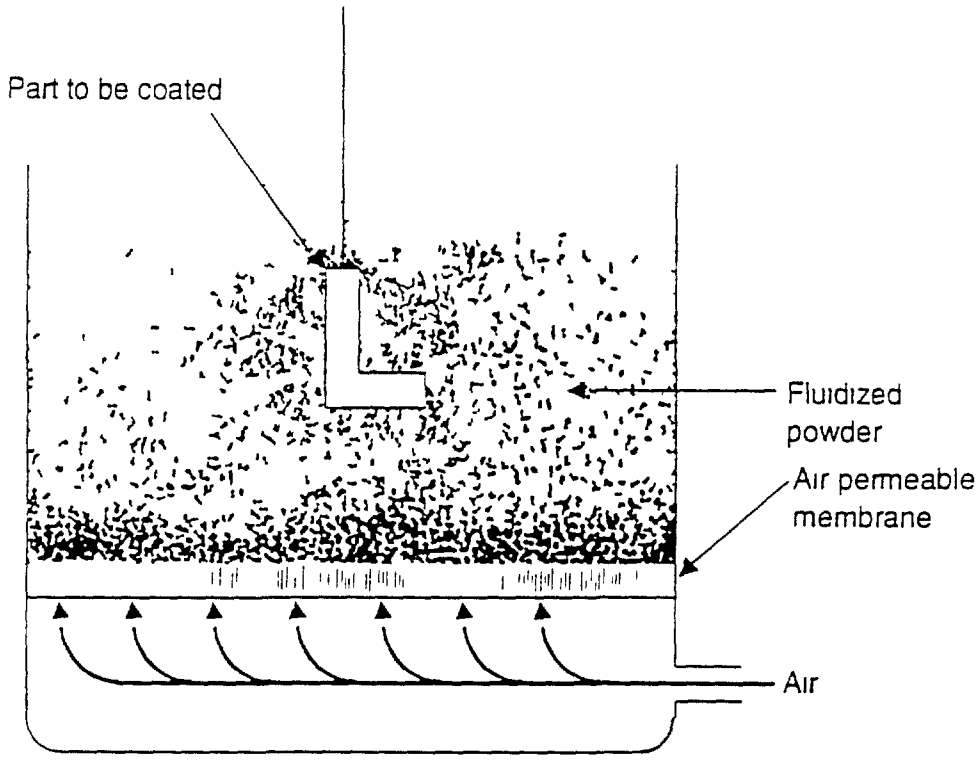

Source Eastern Research Group, Inc

264

to a higher temperature than the melting point of the resin so as particles strike the hot surface they melt and coalesce to form a thick continuous film on the substrate During fluidized bed coating powder is added to replace material that has formed a coating on the substrate Because very little powder is lost or degraded during coating, powder utilization is near 100 percent The fluidized bed method is the original method used for applying powder coatings and is still the method of choice for heavy functional coatings (Lehr 1991)

A modification of this system is the electrostatic fluidized bed (see Figure 3) Here the powder receives a charge from air which flows through a high voltage charging system while the object which is grounded is lowered or suspended over the tank Variations on this principle allow wire mesh or other endless type products to be coated Electrostatic fluidized beds are limited to an effective depth of about 2 to 3 inches so that they are best suited to coating two-dimensional parts (Muhlenkamp 1988)

Curing

Powder coatings must be "heat cured" or melted on to the substrate For thermoplastic resins the substrate can be heated prior to coating so that the resin melts directly on application Thermoset resins are normally cured in either heat convective or infra red ovens or a combination of the two The substrate must be able to withstand temperatures of 260°F or higher Delicate substrates like certain thermoplastics or wood cannot be cured in ovens The substrate must also be of a size and shape to allow immersion coating or heating in a curing oven This prevents general indoor or outdoor application where heating options are not available

Certain thermoplastic powder coatings can be applied by a flame spraying method This technology developed by Plastic Flamecoat Systems Inc in Texas uses a propane and compressed air flame in the spray gun to melt the powder as it is propelled towards the substrate The molten powder hits the substrate and flows into a smooth pinhole free coating (Major 1992)

Thermoplastic powder coatings are used in military applications such air force weapon systems and aircraft The ability to field repair these coatings using spray guns is valued in these applications (Ellicks 1994)

Gas-fired ovens have considerable economic advantages over other energy sources however they can produce nitrous oxides which come in contact with the coating as it cures Some grades of powder are more susceptible to yellowing under these conditions than others Grilesta has developed several powders (grades P 7307 3 and P 7309 3) that can be used in gas-fired ovens without yellowing (Reich 1993)

265

Figure 3

Electrostatic Fluidized Bed for Powder Coating

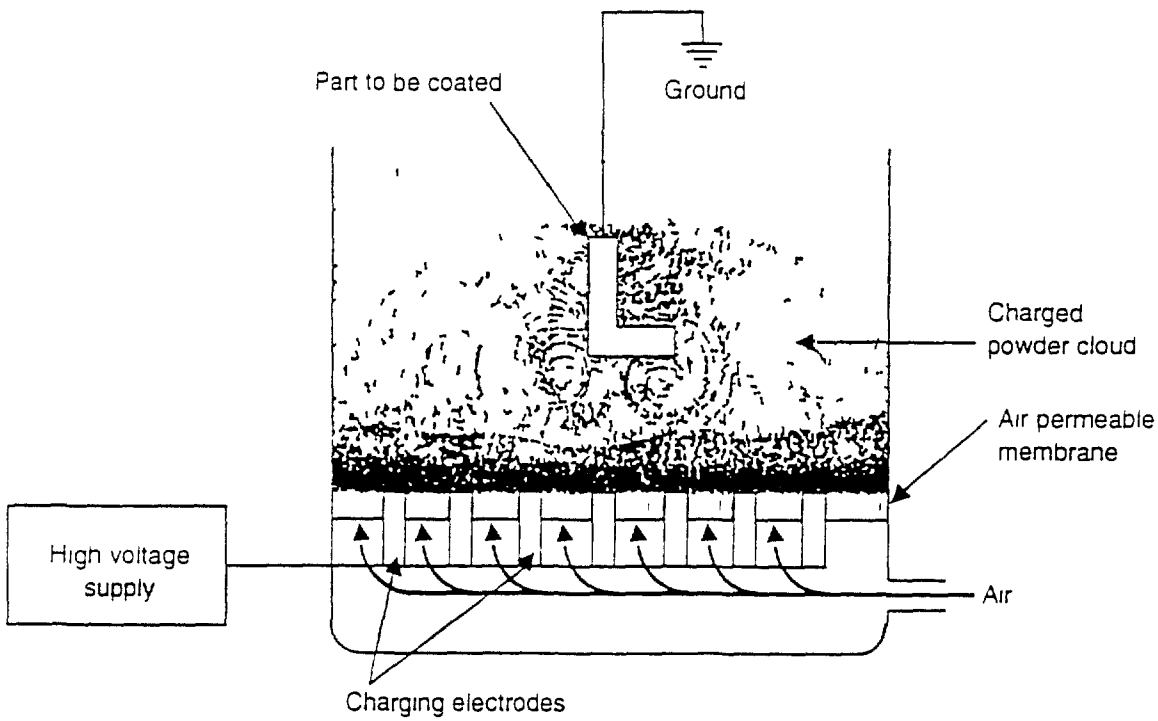

Source Eastern Research Group, Inc

266

Other Issues

Pretreatment of the part to be coated needs to be quite thorough Because powder contains no organic solvents no cleansing action is available as the coating is applied to the part therefore the substrate must be very clean free of grease and other contaminants Before powder is applied the surface must be totally clean dry and enhanced This last term describes the condition of the surface which is attained after an acid wash or rinse Typical pretreatment methods include sophisticated solvent cleaning systems abrasive blasting or cleaning, and aqueous chemical cleaning They are sold as complete systems and add cost to the overall powder operation (see Lehr (1991) for further details)

If only partial coating of a part is required the part needs to be masked to prevent powder from adhering to the entire surface Large numbers of manufacturers need to mask parts and this can be a major problem depending on the part and the degree of masking required

Because powder coatings rely on large, fluidized bed reservoirs it is more difficult to make color changes than with liquid coatings Swapping frequently between a large variety of colors is time-consuming and problems with cross-contamination of color can occur Powder is more suited to operations where color change is infrequent

Powder Coating Equipment

With powder spraying equipment powder is supplied to the spray gun by the powder delivery system This system consists of a powder storage container or feed hopper with a pumping device that transports a stream of powder to the gun through hoses or feed tubes A supply of compressed air often is used as a pump because the air separates the powder into individual particles for easier transport

All spray guns can be classified as either manual (hand held) or automatic (mounted on a mechanical control arm) however the basic principles of operation are the same Spray guns are available in a variety of styles sizes and shapes The type of gun used can be selected to achieve whatever performance characteristics are needed for the products being coated

Improvements have been made to spray guns to improve the coating transfer efficiency Many of these changes involve variations in spray patterns Nozzles that resist clogging have been introduced Spray guns with variable spray patterns are also available for using one gun on multiple parts of different configurations

The powder delivery system can supply powder to one or several guns often located many feet from the powder supply Delivery systems are available in many different sizes depending on the application the number of guns to be supplied, and the volume of powder to be sprayed during a given time period Recent improvements in powder delivery systems coupled with improvements in powder chemistries that can reduce clumping have made it possible to deliver a very consistent flow of particles to the spray gun Agitating or fluidizing the powder in the feed hopper also helps to prevent clogging or clumping before the powder enters the transport lines

Innovations in powder delivery systems allow the powder supply reservoir to be switched easily to another color powder when necessary If the overspray collection system is also not changed however the collected powder will include all of the colors applied between filter replacements or booth cleaning For collected oversprayed powder to have the greatest value it should be free of cross-contamination between colors

Numerous systems now are available for segregating colors and that allow several colors to be applied in the same booth Most of these systems use a moveable dry filter panel or cartridge filter that is dedicated for one color and that can be removed easily when another color is needed Color changes are accomplished by

(1) disconnecting the powder delivery system and purging the lines
(2) cleaning the booth with compressed air or a rubber squeegee
(3) exchanging the filter used with the filter for the next color and
(4) connecting the powder delivery system for the new color

Equipment manufacturers have made significant improvements in design of spray booths, enabling color changes to be made with a minimal downtime and recovery of a high percentage of the overspray

Electrostatic and tribocharged spraying both result in overspray of powder However unlike the overspray from most solvent coatings powder overspray can be collected and reused Figure 4 shows a schematic of a recycling system for powder coating Recycling systems coupled with the inherently high transfer efficiency of powder coating results in reduced waste paint disposal lowering both costs and environmental impacts As with spray guns a large number of spray booth and powder recovery designs are available to choose from depending on the exact requirements of a given finishing system (Hester and Nicholson 1989)

Figure 4

Powder Coating Recycling System

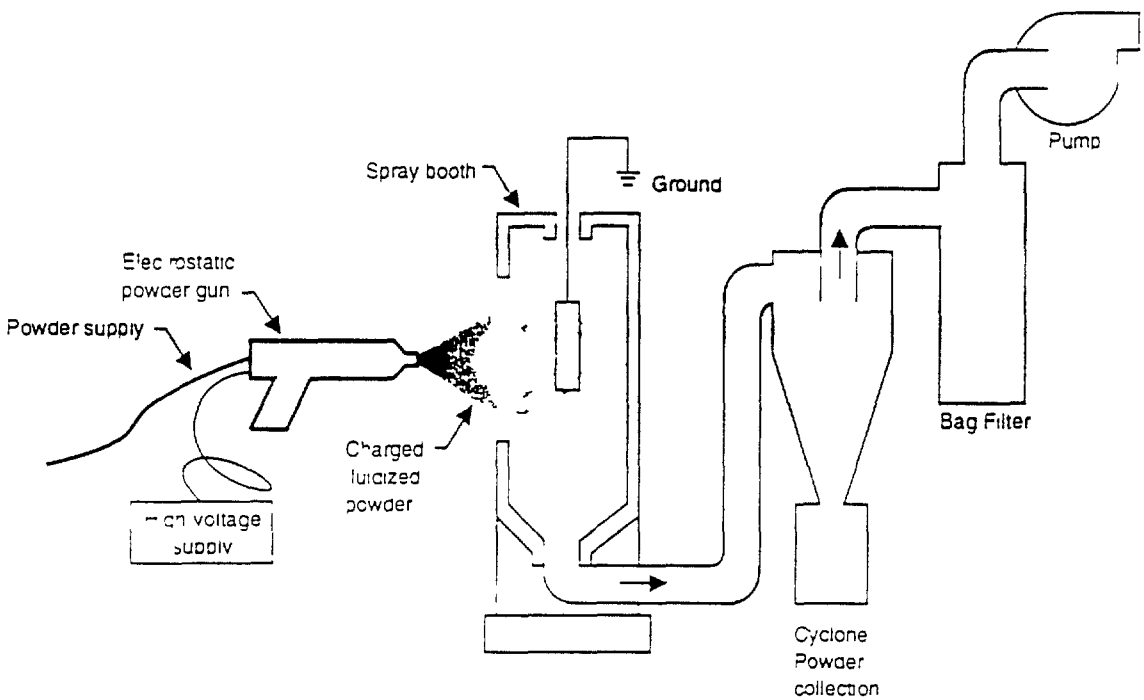

Source Eastern Research Group Inc

269

Required Skill Level

Powder coating equipment and techniques are easier than those used for conventional dip coating or spray painting The operator needs less skill than a comparable liquid spray painter However the operator does need experience with powder to determine if the deposited coating will result in a good film before the coating enters the oven

Developments in Powder Coating

Powder coatings traditionally have had poor weathering properties especially the common epoxies Certain acrylic powders give better ageing and UV weathering resistance One of the better systems for high UV resistance uses carboxylated polyesters cured with TGIC In an accelerated weathering experiment this system showed UV resistance similar to an acrylic resin cured with TGIC hardener Values for gloss retention are as high as 60 to 70 percent after 4 years exposure in Florida (Loutz et al 1993)

Curing by IR radiation induces very rapid development of the crosslinked film enhancing line speed, however viscosity of the film increases quickly, hindering transport of water during the curing process Water evolved as a byproduct from the crosslinking reaction can be trapped in the film leading to problems of severe pinholing and gloss reduction (Loutz et al 1993)

Based on epoxy/polyester hybrids thin layer coatings are now available in the range 1-1 2 mils (25 to 30 microns) for colors with good hiding power Currently these are only suitable for indoor applications because the epoxies degrade on exposure to outdoor weathering (Major 1992)

Thin coats may be desirable where protection from corrosion and other environmental factors is not so important The reduced thickness directly

reduces the amount of powder needed and consequently the cost of the coating For thin coat application the powder particle size is approximately 25 microns and must have a narrow size distribution (Loutz et al 1993)

When thin coats are applied impurities in the powder can give rise to visible surface defects such as cratering For this reason the resin is carefully filtered to remove traces of gel, unreacted monomers and other non-soluble materials Thin coatings show surface imperfections more readily than thick coatings Small amounts of thermoplastic resin can be added to the formulation and this will act as a permanent plasticizer and reduce the melt viscosity giving better flow to the finished coating (Loutz et al 1993)

Growing concerns over solvent and solid waste emissions from solvent-borne coil coating operations have led to use of powder for coil coating Powder formulation technology has advanced and current powders are now highly formable and stain resistant allowing their use in coating coil stock manufactured for domestic appliances such as refrigerators washing machines and microwave ovens (Loutz et al 1993)

Blank coating by powder offers similar benefits to coil coating Flat metal blanks are cut and cleaned before powder coating then formed into the part One advantage is high speed of operation blanks are cut cleaned coated and cured in as little as two minutes Other benefits include uniform film thickness high transfer efficiency and a compact finishing operation (Major 1992)

Low gloss coatings are now available with good mechanical surface properties and appearance Gloss values range from 1 percent or less with epoxies to approximately 5 percent for weather-resistant polyesters (Major 1992)

Textured powder finishes range from fine textures with low gloss to rough textures suitable for hiding an uneven surface on the substrate Textured powder coatings have shown large improvements in mechanical and processing abilities compared to those of several years ago (Major 1992)

Metallic powder coatings incorporate metal flakes which are blended with the powder before being sprayed onto the substrate Aluminum extrusions are commonly coated and efforts are concentrated on matching anodized parts A clear topcoat over the metallic base improves exterior durability of the coating (Major 1992)

In mold powder coatings allow manufactures of certain molded plastic products to coat with powder during the molding operation Powder is sprayed into the mold before the molding compound is added the powder then melts and cures chemically bonding to the molding compound and producing a finish with excellent surface properties such as chip and impact resistance Suitable substrates are sheet molding compounds and bulk molding compounds used to produce automotive body panels and other items (Major 1992)

Polyester and acrylic powder coats have been developed for outstanding weather resistance Powder coatings can meet all the requirements of AAMA 603 and 605 specifications except the Florida five year exposure test which is still underway (Major 1992)

Powder coatings with very high reactivity have been developed to cure at 250°F these allow higher line speeds (increased productivity) and greater use

271

of heat sensitive substrates Shell Development Company in Houston is working on low temperature cure epoxies that have adequate physical and chemical properties to allow exterior use (Major 1992) Adding a selective catalyst such as Crylcoat 164 to a conventional polyester allows curing at reduced temperatures of approximately 260°F to 280°F Two major drawbacks are a risk of premature reaction during the extrusion process and poor surface appearance because of partial crosslinking before complete fusion of the powder (Loutz et al 1993)

American Cyanamid Co produces a solid amino cross-linking resin for powder coatings with the tradename Powderlink 1174 (tetramethoxymethyl glycoluril) This resin can be used with either hydroxyl function polyesters or acrylics to produce highly durable light-stable coatings with good mechanical properties The cross linking resin has low toxicity low environmental impact and both performance and economic advantages An internally catalyzed polyester designed for use with 1174 is commercially available The polyester has wide cure responses along with good film appearance and other properties (MP&C 1992)

Applications

Applications of powder coating are growing rapidly because of numerous benefits including lower cost higher quality and increased pollution prevention opportunities

Materials suitable for powder coatings include (Robison 1989 Bowden 1989)

- Steel
- Aluminum
- Galvanized steel
- Magnesium
- Aluminum magnesium zinc and brass castings
- Plated products

Product Finishing

Powder coatings are used commercially for a wide range of small to medium-sized metal parts including lighting fixtures equipment cabinets outdoor furniture heat exchangers microwave antennas shelving and hand carts and wagons Radiation Systems Inc based in Virginia coats microwave antennas with polyester powder forming a coating that is resistant to physical damage solar radiation and environmental effects (P&SF 1992)

Powder coatings are firmly established in industries that manufacture metal furniture lawn and garden equipment store shelving exercise equipment and

272

aluminum extrusions Job shop electroplaters have adopted powder coatings to meet customer specifications and environmental regulations (CMR 1993)

Clear coatings especially topcoats are increasing in importance The automotive industry use clearcoats on wheels trim and other fittings Bicycle manufacturers also use powder clearcoat when performance and quality count more than small cost increases (Reich 1993)

Automotive components coated by powder include vacuum booster housings door handles steering columns oil filters aluminum wheels shock absorbers and antennae among others Toyota General Motors and Chrysler use powder coatings for door frames and in some instances for lower body anti chip coatings Powder coating is used as an effective primer surfacer, and for blackout finish Current activity is focused on applications for light trucks and sport utility vans General Motors for example, applies primer surfacer and blackout finishing to Chevrolet S 10s and Blazers (Cole 1993)

Industrial and Architectural Finishing

Powder coatings are used to protect many parts of buildings, both exterior and interior residential and commercial Polyester powders are applied in controlled factory settings to aluminum and galvanized steel profiles and sheet products for use in windows doors curtain walls and exterior cladding Fusion bonded epoxy powder coatings are used for protection of steel reinforcing bar and mesh in concrete structures Polyurethane or polyester powders finish many ancillary components in the building industry such as downpipes lampposts fencing railing street furniture and other metal parts Epoxy and epoxy/polyester hybrid powders are not suitable for exterior use and therefore coat interior components including air-conditioners light fittings partitioning and radiators (P&II 1991 P&SF 1993)

Polyester powder coats can be applied to galvanized steel producing strong corrosion resistant and visually pleasing architectural components however problems with 'pinholing' and poor adhesion have undermined powder's reputation in this area Pinholing is unique to galvanized steel and although unsightly it does not impair corrosion resistance Pretreatment of the metal surface is necessary to reduce pinholing A vigorous cleaning regime involving a soak clean an etching cleaner a chromate solution and various cold and de mineralized water rinses is recommended (Metallurgia 1991)

Industrial powder coatings can provide a corrosion resistant finish without pretreatment such as priming or even sandblasting [according to Manchester Industrial Coatings Ltd] Powder coatings applied to substrates that had not been pretreated were upon testing found to be resistant to conditions encountered in the North Sea and eastern Asia (AMM 1991) Powder coating

without any pretreatment should be considered quite risky Proper testing needs to be applied to the product in question if this method is to be considered

Cost

The capital cost for booths electrostatic spray applicators and curing ovens is typically higher than similar equipment used for applying conventional fluid coatings Powder coating systems however do not require control equipment to lower VOC emissions

Powder coating materials are typically more expensive than conventional coating materials on a volume basis In many cases however the cost of producing a finished coating is lower thereby offsetting the higher cost of the powder

Because powder coatings can provide a coating of the required thickness in one pass the economics for powder coatings improves in cases where a thick coating is needed

For powder coating operations using a single color maintenance and cleanup costs are low The operating costs increase for powder coating systems that require frequent color changes Solvents are not needed cleanup can be accomplished quickly using only compressed air No waste solvents are generated and the waste coating material volume is low reducing disposal costs

Benefits

The benefits of powder coating systems versus liquid coating systems are

- Powder does not contain solvents therefore powder is VOC compliant Compressed air rather than solvent can be used for cleanup
- Thick powder coatings can be applied in one pass even over sharp edges
- Powder coatings have higher operating efficiencies than conventional coatings High transfer efficiency results in high material utilization rates
- Powder coatings require less energy to cure than baking systems
- Because no volatile solvent is used little air flow is needed in work areas or near curing ovens The airflow used to contain the powder in the booth can be safely recovered eliminating the need for make up air Energy use for heating makeup air declines when air flow requirements are reduced

- Resins that are not soluble in organic solvents can be used Powder coatings can coat substrates using polymers such as polyethylene nylon or fluorocarbons that are not amenable to solution coating techniques

- Powder coatings come ready to use and therefore do not require mixing or stirring

Limitations

Limitations of powder coatings may include the following

- The application of powder coatings requires handling of heated parts (unlike air dry systems) because the parts must be subjected to elevated temperatures in processing A cool-down zone is normally required

- Because powder coatings rely on large, fluidized bed reservoirs it is more difficult to make color changes than with liquid coatings Swapping often between a large variety of colors is time-consuming and problems with cross-contamination of color can occur

- Color matching from batch to batch is difficult

- Shading or tinting cannot be done by the end user

- It is difficult to incorporate metal flake pigments that are popular in some automotive finishes in powder coatings Aluminum flakes have potential for explosion if ignited although new developments in encapsulating flakes in resin may solve this problem

- For electrostatic application systems the parts must be electrically conductive or they must be covered with an electrically conductive primer

- For electrostatic application systems, parts with complex shapes might be unevenly coated unless special application techniques are used

State of Development

Powder coating has a well-established niche in the coating industry Both thermoplastic and thermoset powdered resins are available for use with fluidized bed electrostatic fluidized bed electrostatic spray guns or tribocharging spray guns Detailed information can be obtained from the Powder Coating Institute (see Section 4)

275

REFERENCES

AMM 1991 New powder coating needs no priming *American Metal Market* December 18, p 4

AP&CJ 1992 Powder coatings developments described *American Paint & Coatings Journal* 76(54) 43

Bailey, Jane 1992 Powder coating an environmental perspective *Industrial Finishing* 68(9) 60

Brown, Larry W 1994 Aerospace applications for powder coating at Hughes Aircraft Company In *Proceedings Pollution Prevention Conference on Low- and No-VOC Coating Technologies* U S Environmental Protection Agency Air and Energy Engineering Research Laboratory Organics Control Branch Research Triangle Park NC EPA-600/R-94-022 February, 1994

CMR 1993 Powder coatings *Chemical Marketing Reporter* October 25 p 22

Cole, Gordon E Jr 1993 Automotive "takes a powder " *Industrial Paint & Powder* 69(12) 24

Crump, David L 1991 Powder Coating Technology at Boeing In Sixth *Annual Aerospace Hazardous Waste Minimization Conference* Boeing Company Seattle Washington, June 25 27

CW 1993 Powder coatings sparkle *Chemical Week* November 10 p 77

Ellicks David F 1994 Environmental Compliant Thermoplastic Powder Coating In *Proceedings Pollution Prevention Conference on Low- and No-VOC Coating Technologies* U S Environmental Protection Agency Air and Energy Engineering Research Laboratory Organics Control Branch Research Triangle Park, NC EPA-600/R-94-022 February, 1994

Grafflin, David M Fluoropolymer coatings for architectural automotive and general industrial applications In *Proceedings Pollution Prevention Conference on Low- and No-VOC Coating Technologies* U S Environmental Protection Agency Air and Energy Engineering Research Laboratory Organics Control Branch Research Triangle Park NC EPA-600/R 94-022 February 1994

Harrison Alan 1993 Perfect partners powder in perspective *European Polymers Paint Colour Journal* 183(4330) 295

Holder, Albert 1994 Advantages of Powder Coating In *Proceedings Pollution Prevention Conference on Low- and No-VOC Coating Technologies* U S Environmental Protection Agency Air and Energy Engineering Research Laboratory Organic Control Branch Research Triangle Park NC EPA-600/R 94 022 February 1994

Ingleston Roy 1991 Powder Coatings Current Trends Future Developments *Product Finishing* 6-7 August

Keebler Jack 1991 Paint it green powder coating and sludge recycling may clean up environmental problems *Automotive News* May 27 p 51

Lehr William D 1991 Powder coating systems New York NY McGraw-Hill Inc

Loutz, J M D Maetens M Baudour L Mouens 1993 New developments in powder coatings Part 1 and Part 2 *European Paint Polymers Journal* December 8 p 584

Major Michael J 1992 Innovation and regulations aid powder coatings *Modern Paint and Coatings* 82(13) 6

Metallurgia 1991 New guidelines for powder coating of steels 1991 November p 443

Mounts Michael L 1993 Converting from vapor degreasing to the optimum alternative *Metal Finishing* August p 15

MP&C 1991 Powder coatings share program with water bornes and higher solids *Modern Paint and Coatings* May p 53

Muhlenkamp Mac 1988 The Technology of Powder *Modern Paint and Coatings* 78(1) 52 68 November

Osmond M 1993 Architectural powder coatings a review of new advances in exterior durable systems *Surface Coatings International* 1993(10) 402

P&II 1993 U S powder coatings study *Paint & Ink International* September p 43

P&R 1991 Thin coatings deep profit *Paint & Resin* 61(4) 12

P&SF 1992 Powder coatings play major role in microwave antenna manufacture *Plating and Surface Finishing* October p 8

P&SF 1993 For aluminum window/door fabricator powder coating is finish of choice *Plating and Surface Finishing* July p 8

Plas Daniel J 1992 Powder the comeback coating *Materials Engineering* 109(9) 23

Reich, Albert 1993 Market trends in powder coatings *European Polymers Paint Colour Journal* June 9 p 297

Russell Bob 1991 BATNEECs to boost powder usage (Best available techniques not entailing excessive cost) *Finishing* 15(6) 38

Seymour R B 1991 Progress in powder coatings *Journal of the Oil Chemists and Colourists Association* 1991(5) 164

Sheasby, Andy and Matthew Osmond 1991 Powder coatings for the building sector *Paint & Ink International* February, p 2

P&II 1991 Tintas Coral's new anti-corrosion powder coating *Paint & Ink International* May, p 40

Wang, Victor and Abid N Merchant 1993 Metal-cleaning alternatives for the 1990s *Metal Finishing* April, p 13

WATERBORNE COATINGS

Pollution Prevention Benefits

Waterborne coatings substitute water for a portion of the solvent used as the resin carrier in typical organic coatings formulations In addition to reducing VOC emissions during formulation and application, waterborne coatings pose a reduced risk of fire are more easily cleaned up (creating less hazardous residues) and result in reduced worker exposure to organic vapors

How Does it Work?

Waterborne coatings are defined as "coatings which are formulated to contain a substantial amount of water in the volatiles" (Nicholson 1988) This definition appears fairly vague but it is based on practical considerations A coating's physical properties are largely determined by the type of solvent carrier Waterborne coatings contain water as a primary solvent although substantial quantities of organic solvents can be present

This definition encompasses a variety of waterborne paints including emulsions (or latexes) in which only water is used as a solvent as well as water reducible coatings that incorporate a mix of water and organic solvents Emulsions are dispersions of resin pigments biocides, and other additives in

water Water reducible coatings are solutions of resins dissolved in solvents these solvents might be water or a mix of water and organic solvents Organic solvents are used to aid the solubility of the resins and other additives

Waterborne coatings have experienced much growth and development in recent years because of concerns about solvent emissions in the workplace and to the atmosphere waterborne coatings have the potential for zero emissions of VOCs although many formulations still use some organic solvents Knowledge of how EPA or state regulations define VOC content is very important For solvent borne coatings the regulations are straight forward VOC content in pounds per gallon is measured by the standard test ASTM D 2369-81 This test weighs a portion of coating material then evaporates off the VOCs and reweighs it calculating the difference gives the weight of VOC per gallon With waterborne coatings, most regulations require a VOC content of less than, say 3 5 lb/gal *less water* This means that to measure the VOC content the water would first have to be removed, then the standard test procedure should produce a result of 3 5 lb/gal or less in the remaining solution

Many industries use waterborne coating systems including building and architecture automotive metal finishing industrial corrosion-protection and wood finishing Common perceptions exist in industry that waterborne coatings have inferior properties when compared with their solvent-borne counterparts For instance it is commonly thought that all waterbornes take longer to dry than solvent borne coatings This is untrue as many emulsion coatings especially architectural finishes dry faster and can be recoated sooner than solvent bornes Cured waterborne films are also believed by some to be more sensitive to moisture Some waterborne automotive topcoats had these problems in the 1980s but many other waterborne systems cure to moisture-impervious coatings

Waterborne coatings pose less risk of fire and are easier to clean up and dispose of than solvent based coatings Because the cost of water is less than that of organic solvents waterborne coatings generally present an economic advantage The costs of storage also are lower because waterborne coatings are non hazardous and do not require storage in flame-proof enclosures Costs associated with installing ventilation systems in the workplace also are lower

Waterborne Resin Systems

Waterborne coatings were historically formulated with polymers of high molecular weight and high glass transition temperature to produce a film with good chemical resistance toughness and durability without the need for crosslinking in the film The glass transition temperature is an important concept it is defined as the temperature at which there is an increase in

thermal expansion coefficient (Wicks et al 1992) Often the coating is brittle below this temperature and flexible above it but this is not always the case High molecular-weight polymers require solvents to reduce viscosity to acceptable levels and to enable the polymer to soften and flow for good film formation

Today formulations with lower molecular weight resins and lower viscosity are more common These formulations provide a reaction mechanism for cross-linking between the polymers to achieve desired film properties A crosslinked polymer generally produces a film with enhanced physical and chemical properties compared to a non-crosslinked film Cross linking can be achieved by curing one component systems at ambient or elevated temperatures or by mixing two reactive components (two resins or resin plus catalyst) in two component systems

Almost all types of resins are now available in a waterborne version, including vinyls, two-component acrylics, epoxies polyesters, styrene-butadiene, amine-solubilized carboxyl-terminated alkyds and urethanes Each of these resins has different properties that challenge users to define their needs and coating manufacturers to provide the optimum coating to fill those needs (Pilcher 1988)

Types of Waterborne Coatings

The three classes of waterborne coatings are

- Water soluble or water-reducible coatings
- Colloidal or water solubilized dispersion coatings
- Latex or emulsion coatings

Water-Soluble Coatings—Resins for water soluble coatings can be solubilized in pure water or in water solvent mixes These coatings are termed "water soluble" or "water-reducible" because the resin is dissolved primarily in water and addition of water reduces the viscosity of the coating Polymers that solubilize in coatings containing only water must be hydrophilic that is they must be attracted to and wetted by water The presence of polar groups on the resin molecule produces hydrophilic polymers

Water-soluble formulations include water-soluble oils polybutadiene adducts alkyds, polyesters and acrylics Water-soluble coatings tend to have simpler formulations than emulsions and are easier to apply but have lower durability and lower resistance to solvents (Paul 1986)

Colloidal Coatings—A colloidal or water solubilized dispersion coating is an intermediate between water-soluble and emulsion coatings, combining resin systems from each

The application and physical characteristics of colloidal dispersions lie in between water-soluble and emulsion coatings Colloidal dispersion or coatings are composed of very fine partially water-soluble resin droplets dispersed in water Colloidal dispersions are used mainly to coat porous materials such as paper or leather

Emulsion or Latex Coatings—An emulsion coating contains resin dispersed as a solid in water In this case since the resin is not dissolved it is not required to be hydrophilic nor is organic solvent required The droplets are stabilized in an aqueous medium by emulsifiers and thickeners The most common resin used for emulsion coatings are of the vinyl type, derived from the monomer vinyl acetate When mixed with other monomers the coating polymerizes into a film with the desired properties

Acrylic resins are an alternative binder These resins are derived from the monomer acrylic acid, which is also the parent monomer for the methacrylates Acrylic latexes are generally more durable than vinyl acetate copolymers and they have higher gloss The two types of monomers, such as a vinyl and acrylic can be combined to produce films with alternative surface properties

Emulsion coatings are complex mixtures Among the ingredients that might be present in the formulation are polymer particles surfactants pigments and extenders thickeners coalescing solvents preservatives and corrosion inhibitors among others These ingredients comprise approximately half of the paint formulation the other half is water Titanium dioxide is the most common pigment, providing white color and opacity Since the pigment must be dispersed in the water along with the resin two dispersing agents are required one for the resin and one for the pigment Thickeners or protective colloids must be added to raise the viscosity to a level that is acceptable for application Preservatives or biocides are added to prevent microorganisms from degrading the additives

Emulsion coatings are widely used in the building industry as a decorative and protective coating for domestic houses and other architectural applications Emulsions dry quickly and additional coats can be applied within a few hours Tools and containers can be cleaned with water

The physical and mechanical properties of water-soluble emulsion and colloidal coatings vary significantly For example the handling considerations and performance parameters for a water-soluble with a polymer of molecular weight 2 500 will be different from those of an acrylic latex with a polymer of

molecular weight greater than 1 million Coating systems need to be chosen that will best satisfy all requirements of the application

The diversity of water based coating technology is a strength but it also is a challenge Because water based coatings provide a range of characteristics formulations can be prepared to fit many different applications The waterborne formulations, however, require more careful preparation of substrate and application of coating than conventional solvent-based coatings

Application Methods

Waterborne coatings can be applied by

- Brush or roller
- Dip coating
- Flow coating
- Air spray
- Airless spray
- Air assisted airless spray
- HVLP spray
- Electrostatic spray

All application systems work with waterborne coatings Waterbornes are very viscous and thixotropic so spray gun systems must be able to spray the higher viscosity coating Thixotropy is the extent of shear thinning (degree of liquification) as a result of shear forces in the solution As with high solids coatings spray guns may need to be modified (fluid tips replaced etc) or new guns purchased Experimentation can be required to find the best gun for the particular coating that is to be applied Correct spray viscosity can be achieved by adding water to reduce the viscosity of coating however it is better to change spray guns or fluid tips because too much thinning with water will alter the flow and other properties of the coating potentially causing problems The applicator should test the guns with the coating material to see if a problem exists then try different guns and different waterborne coating systems Spray guns must have stainless steel components where contact with water is an issue

Some systems such as high-pressure airless and air assisted airless can be problematic when spraying waterborne coatings Air bubbles can be generated in the gun and get carried by the coating material to the substrate becoming entrapped in the surface of the coating Testing of different spray guns and coating materials should lead to a solution for this problem

Because waterborne coatings are viscous and thixotropic they might not be compatible with existing pumps and piping designed for solvent borne coatings, so new pumping systems may need to be considered

Electrostatic Spraying—Electrostatic application can be used to raise the transfer efficiency (TE) thereby reducing overspray Special equipment and techniques are needed for electrostatic application of water-based coatings because of the electrical conductivity of aqueous solutions

The coating picks up an electrostatic charge in the spray gun nozzle and is attracted to the grounded substrate resulting in raised TE Because water becomes easily charged and conducts the charge from the spray gun back to the source of the coating (e g container 55 gal drum etc), the source must also be isolated from ground The pressure pod or drum must be kept away from the operator or a cage must be built to isolate the system and protect the operator The hose to the spray gun is rubber and must be long enough to reach the distant coating source At excessive distances charge can bleed off through the hose to ground

Four options exist for applying water-based coatings using an electrostatic system (Scharfenberger 1989)

- Isolate the storage and supply system from electrical grounds to prevent leakage from the application atomizer
- Use an external charging system that is attached to but electrically isolated from the application atomizer
- Electrically isolate the coating liquid storage and supply system from the application atomizer to prevent current leakage through the coating supply system
- Place the electrostatic charge on the substrate and ground the application atomizer

For large waterborne spray systems a patented solution is available Developed by Nordson and called the Isoflo system the system provides solutions to the problem of isolating and caging the coating source especially if the volume is large and pumps and equipment are large or complicated This system electrically isolates paint in the spray gun from the paint source allowing coatings reservoirs and pumping systems to be grounded rather than isolated Therefore cages around the coating containers and pumps are not necessary

In addition to conventional application methods water-based coatings also are amenable to electrodeposition Electrodeposition of water based coatings

resembles electroplating where a substrate is submerged in an aqueous bath The coating material is deposited on the substrate by direct current flow Electrodeposition is described in Section 2 pages 58 to 61

Other Issues

Environmental factors such as humidity must be controlled when applying waterborne coatings in order to achieve the best film formation Too much moisture can prevent curing too dry an atmosphere can cause very rapid curing resulting in poor film formation Humidity can be controlled in spray booths with a microprocessor-controlled water-spray system

For product finishing coatings need to dry or cure at elevated temperatures to assure complete cure in a reasonable period of time Ovens are used for baking waterborne coatings and these have different requirements from ovens used in solvent-borne baking Lower temperatures will be used and ovens may need to be relined with stainless steel A stainless flue is especially important to conduct moisture away from the oven

Dry-filter spray booths will need new or modified filters to cope with waterborne systems Water-wash spray booths require new chemicals in the water to help dissolve waterborne solids

Pretreatment or cleaning of the substrate is vitally important with waterborne coatings for similar reasons to those of powder coating and high solids Waterbornes contain little or zero organic solvents which can wet grease effectively Water has a high surface tension and grease spots or other contaminants will cause defects in the film unless they are removed prior to coating Aqueous degreasing systems and abrasive blasting are pretreatment techniques that can clean surfaces in preparation for coating See for example U S EPA (1993) Mounts (1993) Wang and Merchant (1993) and Lehr (1991)

Required Skill Level

Although the application equipment is similar greater operator skill and attention is needed for application of water based coatings

Applications

Water based coatings are used primarily as architectural coatings and industrial finish coatings because these paints are easy to apply and adhere to damp surfaces dry rapidly and lack solvent odor More than 70 percent of architectural coatings are water based paints Water based architectural coatings include

- Industrial protective coatings
- Wall primers and sealants
- Interior flat and semigloss wall paints
- Interior and exterior trim finishes
- Exterior house paints

Water-based coatings have not been readily accepted in the industrial sector Stricter regulations however are increasing demand for both primer and topcoat industrial finishes

Architectural—Water based epoxy coatings provide excellent adhesion when applied to green or damp concrete Odor levels during curing of water based epoxy coatings is low and the cured coating surface is easy to clean Water-based epoxy coatings therefore are suitable for sanitary areas such as hospitals or food processing plants (Richardson 1988)

Development of exterior waterborne gloss enamels has progressed in recent years although these enamels cannot match solvent borne enamels in all areas A recent study (1989) found that waterborne exterior enamels are inferior with respect to gloss flow brushability, and opacity Waterborne enamels, however are superior in gloss retention chalking and adhesion (Hayward, 1990)

Products Finishing—Wood products traditionally have been coated with solvent borne nitrocellulose lacquers such as clear coatings used on furniture These lacquers are fast drying and easy to apply with an excellent appearance and hardness but they have high solvent contents A waterborne low solvent nitrocellulose acrylic latex (NC-A latex) is available This product, designated CTG D-857 and produced by Aqualon Inc of Delaware contains no organic solvent carrier although small quantities of plasticizers, coalescing solvents and other resins are added to aid in film formation VOC levels are 2 3 lb/gal or lower NC A latex coatings have better clarity resistance to alcohol and strippability than acrylic based latexes NC A formulations have lower gloss when applied than acrylic based latexes but gloss levels increase after rubbing and polishing (Haag 1992)

Plastic products have traditionally been difficult to coat with latexes Since the surface tension of water is higher than the surface tension of most plastics, wetting of the surface and hence film formation is poor Reducing the surface tension of the coating with surfactants can help but does not guarantee wetting or adhesion Polymer chemists have found that by matching surface energy profiles the coating polymer and plastic substrate can be improved Waterborne systems are available that meet appearance and resistance requirements of the automotive industry The computer and business machine

285

industries in Silicon Valley California have been using waterbornes on plastics since the early 1980s

Industrial Applications—Waterborne coatings for coil coating operations are commercially available These coatings are based on polyester or acrylic resins that are cross linked with a water soluble melamine derivative during baking The complex copolymers that result produce films that can stand up to the rigors of the coiling manufacturing process and later finishing operations (Nicholson 1988) About 10 percent of U S aluminum coil lines use acrylic based waterborne coatings Acrylics offer good adhesion good exterior durability are resistant to yellowing and are flexible Epoxy esters also offer good adhesion and are resistant to corrosion and detergents but degrade on exposure to UV Polyesters on the other hand are not resistant to detergents but provide good exterior durability Alkyds have lower performance but also a lower cost

A low-VOC water-based epoxy primer is available as a two-component system Unlike most water-based formulations water is not present in either of the two components The components are supplied in a 3 1 volume ratio and mixed prior to application Water is added to the mixture to reduce viscosity After mixing the formulation contains about 340 g VOC/l (2 8 lb/gal) (MP&C 1988)

New Developments

A series of coatings developed by ICI Mond Division Laboratories are now available for corrosion protection applications on structural steel Called Haloflex the coatings incorporate copolymers of vinylidene chloride vinyl chloride and alkyl acrylate or methacrylate with a small amount of acrylic acid The Haloflex resins form a coating film with low permeability to water and oxygen The formulation also is low in surfactants which reduce water sensitivity that is inherent in conventional latex coatings

Research has now found that modified styrene free acrylic binders in latex formulations work better than styrene acrylic dispersion paints for structural steel protection This technology is not currently available but might become available in the near future (van der Kolk et al 1993)

A series of water-soluble epoxies were developed for corrosion protection of steelwork These coatings can be applied by brush spray or dip tank and can be dried at ambient temperatures to produce an anticorrosive glossy film (Wilson et al eds 1988)

Water soluble epoxies also have been developed for coating the interior of metal food and beverage cans These epoxies have been cross-linked by

286

baking with amino resins such as melamine-formaldehyde (Wilson et al eds 1988)

Waterborne coating systems for automotive basecoats are gaining ground although the application technology for these coatings is complex Drying for example involves infrared (IR) heating and high velocity heated air (Modern Paints and Coatings 1989 79 38)

A new technology for water based coatings has been developed that is a great benefit to the wood and furniture finishing industry 'Core-shell" technology provides for a rapid development of coating hardness improving the early and ultimate print and block resistance These properties allow parts to be handled and stacked sooner after coating

Ecopaint a Complete System

The Ecopaint waterborne paint system was developed in Europe by a consortium of manufacturers to meet strict legislative controls on VOCs The Ecopaint system comprises a fully water soluble baking enamel a water wash spray booth (Figure 5) and an ultrafiltration unit (Figure 6) The spray booth is a water-wash design that traps overspray and collects paint particles in the water The waste water/particle mixture then passes through an ultrafiltration

unit that separates the water from the particles In principle all of the overspray and the waste paint from the cleanup of spray guns can be collected and filtered for reuse Excess coating material from cleanup of the storage containers (cans) also can be recovered

The Ecopaint system is suitable for coating a wide variety of products including automotive parts workshop furniture steel shelving, steel pipelines and other parts requiring a stove enamel finish The coatings offer a range of gloss levels textured and structural finishes and a wide range of color Surface film properties generally are high enough to meet most normal industrial requirements Ecopaint coatings are marketed in Europe under the trade name Unicolour and also are available in the United Kingdom and Japan These coatings will soon be available in the U S (JOCCA 1993)

Ecopaint baking enamels are based on fully water soluble resins They contain less than 5 percent VOCs with some containing only 3 percent If required the coatings can be formulated with virtually no organic solvents only a small amount is needed to modify film properties Ecopaint coatings can be applied with most spray methods including conventional air spray, HVLP airless and electrostatic systems including high speed rotary disks and bells Flash off times are short and conventional baking temperatures are employed so existing equipment can be used

Figure 5

Water-Wash Spray Booth

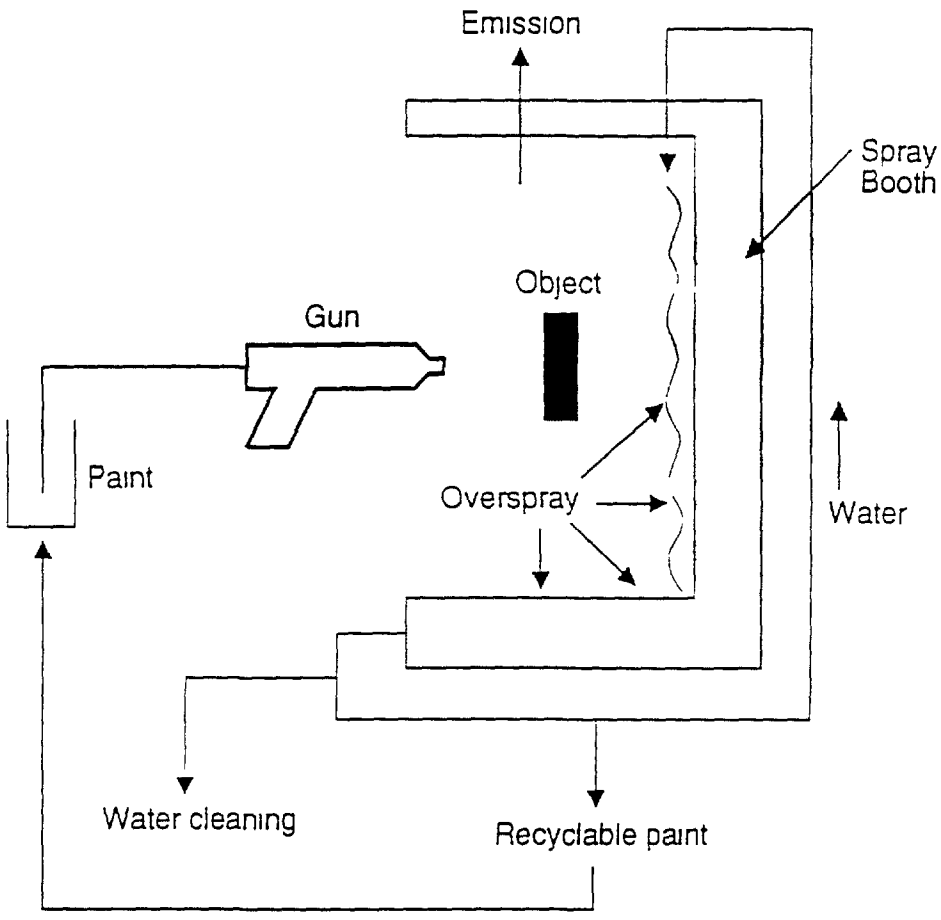

Source Eastern Research Group, Inc

288

Figure 6

Ultrafiltration Unit for Concentrating Waterborne Enamel

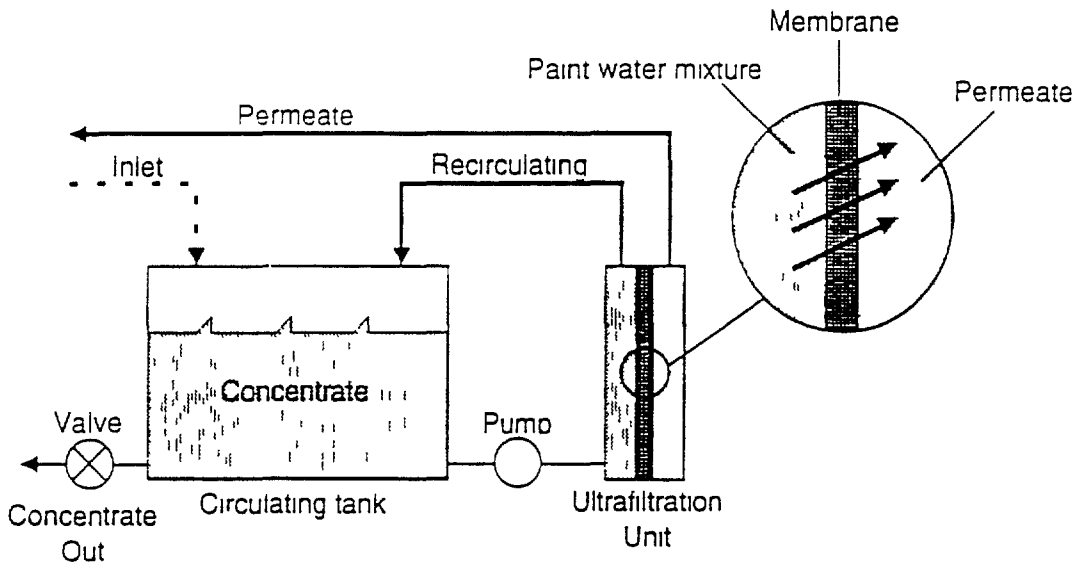

Source Eastern Research Group Inc

289

Water-based Temporary Protective Coatings

Consumer products particularly automobiles are shipped from the factory to the consumer through an uncontrolled and potentially harsh environment A protective coating helps to maintain the quality of the factory finish

Temporary protective coatings typically have been solvent based These coatings release solvents into the atmosphere on curing and often require solvents for removal Temporary coating materials using a water based acrylic copolymer system can produce a tough transparent film that protects the coating for up to one year The film can be removed with an aqueous alkali wash solution Removal of a water based temporary protective coating takes 10 minutes for an automobile compared to 20 minutes for a wax coating (Product Finishing 1986)

Water based coatings also have been tested as masking layers to protect specific areas of metal substrate during chemical milling and etching (Toepke 1991)

Cost

Water-based coatings are more expensive than conventional coatings per unit of reactive resin The costs of coating fluid preparation, application cleanup, and disposal are similar for water-based and conventional coatings A cost comparison of conventional powder high solids and water-based coatings is presented in Hester and Nicholson (1989)

The capital cost for electrostatic spray systems for water based coatings typically will be higher than application equipment for solvent borne coatings because of the electrical conductivity problem Although water-based coatings typically contain some solvents they are less likely to require VOC control equipment High levels of VOC in the waterborne formulation may require carbon absorber equipment or VOC incineration equipment both are expensive

Benefits

Because water based coatings uses less or no organic solvents problems such as environmental odor and safety and health concerns are reduced The benefits of water based coatings are

- Compliance with VOC regulations (though not automatic compliance depends on actual VOC levels and limitations)
- Less exposure to harmful organic vapors in the workplace Less need for ventilation systems to ensure safety and/or meet OSHA requirements
- Lower risk of fire from ignition of organic vapors

290

- Do not cause skin irritation from solvent contact
- Good to excellent surface properties including excellent gloss rub resistance anti-sealing effect and non-yellowing film
- Cost savings depending on the application
- Clean up and disposal is simpler than with solvents and solvent borne coatings Water is primarily used to wash up
- Existing equipment (nonelectrostatic) can be used for application of most water based coatings although stainless steel inserts are required

Limitations

The drawbacks of water-based coatings are

- Some waterborne coatings still contain organic solvents (VOCs), though usually less than high solids formulations
- The flash off time may be longer than for solvent-based coatings This depends on the formulation and environmental conditions
- The film has a tendency to be sensitive to water with an increased potential for degradation though not after full cure
- More energy can be required to force-dry or bake waterborne coatings than solvent formulations because of the high latent heat caused by water evaporation energy requirements can be as much as four times greater for water based coatings
- Waterborne coatings are sensitive to humidity requiring humidity control in the application and curing areas Low humidity can cause those coatings to dry extremely fast resulting in craters in the final film High humidity can cause very slow drying times resulting in sagging
- The quality of the final film is dependent upon surface cleanliness the high surface tension of water prevents wetting of some surfaces especially when grease or other contaminants are present The high surface tension of water also can cause poor coating flow characteristics
- High gloss levels are often difficult to achieve

- Efflorescence or a growth of crystals can occur on certain substrates Plasterboard is commonly affected when water soluble salts like sodium sulfate leach out of the coating disrupting the integrity of the final film

- Water in the coating formulation can cause 'flash rusting of metal substrates For this reason most industrial waterborne are formulated with inhibitors

- Toxic biocides often are added to kill microorganisms that attack additives such as fatty emulsifiers or defoamers

- Emulsion coatings do not penetrate porous substrates such as wood very well this assists "good holdout' but can be a disadvantage if lack of penetration prevents good adhesion on old chalky surfaces

- Some types of resins degrade in water reducing shelf life formulations containing these resins

- Water based latex coatings are susceptible to foaming because surfactants often are used to stabilize the latex

- Water in the formulation also can cause corrosion of storage tanks and transfer piping

- Special equipment is needed for electrostatic application

Tradeoffs

Many water based formulations are compatible with conventional nonelectrostatic spray equipment but require special provisions for electrostatic application As a result a change to water based coatings can be somewhat less disruptive than a change to other technologies such as powder coating

REFERENCES

Adams Larry 1991 Finishing materials must compliance mean an inferior product? *Wood & Wood Products* 96(13) 89

Baracani Al 1990 A coat of many colors coating technology promises to move into the 1990s with water based coatings and new drying/curing developments *American Printer* 205(6) 38

Gunsel R 1993 Water based coatings and the environment *Surface Coatings International* 1993(9) 364

292

Haag Harold F 1992 Low-VOC waterborne coatings for wood based on nitrocellulose acrylic latex *Journal of Coatings Technology* 64(814) 19

Hayward George R 1990 Problems with waterborne coatings In Waterborne coatings surface coatings-3 Eds Wilson Alan D John W Nicholson and Hayward J Prosser New York NY Elsevier Science Publishers Ltd p 295

Huang Eddy Larry Watkins and Robert C McCrillis Development of ultra-low VOC wood furniture coatings In *Proceedings Pollution Prevention Conference on Low- and No-VOC Coating Technologies* U S Environmental Protection Agency Air and Energy Engineering Research Laboratory Organics Control Branch Research Triangle Park NC EPA-600/R 94 022 February 1994

Jacobs Patricia B and David C McClurg 1994 Water reducible polyurethane coatings for aerospace applications In *Proceedings Pollution Prevention Conference on Low- and No-VOC Coating Technologies* U S Environmental Protection Agency Air and Energy Engineering Research Laboratory Organics Control Branch Research Triangle Park NC EPA-600/R-94-022 February, 1994

Jaffari Mark D 1994 Waterborne maskant In *Proceedings Pollution Prevention Conference on Low- and No-VOC Coating Technologies* U S Environmental Protection Agency Air and Energy Engineering Research Laboratory Organics Control Branch Research Triangle Park NC EPA 600/R 94 022 February 1994

JOCCA 1993 Ecopaint a completely recyclable waterborne paint system *Journal of the Oil Chemists and Colourists Association* 1993(3) 116

Lehr William D 1991 Powder coating systems New York NY McGraw-Hill Inc

Marwick Wm F 1994 Waterborne lacquers for aluminum foil In *Proceedings Pollution Prevention Conference on Low- and No-VOC Coating Technologies* U S Environmental Protection Agency Air and Energy Engineering Research Laboratory Organics Control Branch Research Triangle Park NC EPA 600/R-94 022 February 1994

MIN 1991 Coating costs reduced for auto parts *Metals Industry News* 8(2) 2

Mounts Michael L 1993 Converting from vapor degreasing to the optimum alternative *Metal Finishing* August p 15

MP&C, 1991 Polyurethane dispersions for waterborne basecoats *Modern Paint and Coatings* July p 44

MP&C 1992 19th Waterborne symposium record attendance full program *Modern Paint and Coatings* May p 50

Paul Swaraj 1986 *Surface Coatings Science and Technology* John Wiley & Sons New York NY

PF 1986 ICI Wins Pollution Abatement Award for Low Solvent Emission Paints *Product Finishing* 39(s) 23 May

Raghavan Vaikunt and Wayne H Lewis 1991 Epoxy waterborne primer low temp cure and zero VOCs *Modern Paint and Coatings* July p 46

Reitter Chuck 1993 A window with a view of the future waterborne symposium offers high tech sneak preview *American Paint & Coatings Journal* 77(41) 36

Richardson Frank B 1988 Waterborne Epoxy Coatings Past, Present and Future *Modern Paint and Coatings* 78(4) 84-88 April

Roman Nick 1991 Advances in waterborne coatings *Modern Paint and Coatings* November p 34

Ryder Peter C and Peter I Hope 1994 New environmentally acceptable metal coating systems In *Proceedings Pollution Prevention Conference on Low- and No-VOC Coating Technologies* U S Environmental Protection Agency Air and Energy Engineering Research Laboratory Organic Control Branch Research Triangle Park NC EPA 600/R 94-022 February 1994

Stewart Regina M George E Heinig and Francis L Keohan 1992 Waterborne anticorrosive coatings offer low VOC *Modern Paint and Coatings* September p 39

Toepke Sheldon 1991 Water Base Chemical Mill Maskant In *Sixth Annual Aerospace Hazardous Waste Minimization Conference* Boeing Company, Seattle Washington June 25-27

Tuckerman Richard and David W Maurer 1994 The development of practical zero-VOC decorative paints In *Proceedings Pollution Prevention Conference on Low- and No-VOC Coating Technologies* U S Environmental Protection Agency Air and Energy Engineering Research Laboratory Organic Control Branch Research Triangle Park NC EPA-600/R-94-022 February 1994

294

van der Kolk C E M R Kruijt and E A de Rouville 1993 Water-based acrylic dispersion paints for the protection of structural steel a technology in full development *Journal of the Oil Chemists and Colourists Association* 1993(7) 280

Wang Victor and Abid N Merchant 1993 Metal-cleaning alternatives for the 1990s *Metal Finishing* April p 13

Waterborne acrylic copolymer exceeds California standards 1991 *Modern Paint and Coatings* March p 34

Wicks Zeno W Frank N Jones and S Peter Pappas 1992 Organic coatings science and technology (Subtitled volume 1 film formation components and appearance) New York NY John Wiley & Sons Inc

Wilson Alan D John W Nicholson and Havard J Prosser 1988 Surface Coatings Volume 2 Elsevier Applied Science

Winchester, Charles M 1991 Waterborne nitrocellulose wood lacquers with lower VOC *Journal of Coatings Technology* 63(803) 47

ELECTRODEPOSITION

Pollution Prevention Benefits

Electrodeposition uses waterborne coatings with reduced levels of VOCs The reduced VOC content of the coatings, combined with the superior transfer efficiency of the process results in reduced VOC emissions In fact closed loop operation (which would eliminate VOC emissions completely) is possible with electrodeposition In addition because of the higher transfer efficiency there is less waste generated from the coating operation in comparison with conventional coatings operations

How Does it Work?

Electrodeposition of paints also known as electrocoating (or E-coat) has existed since the 1920s when the first processes were patented Electrodeposition is a waterborne coating technology with excellent pollution prevention potential because of the very low organic solvent content and very high transfer efficiency The automotive industry is the largest user of electrocoat priming car bodies for corrosion protection and subsequent painting Electrocoating was commonly used in industry in the 1960s with anodic electrodeposition (AED) but by the mid-1980s almost all of industry was using cathodic electrodeposition (CED) because of superior film properties

In electrodeposition the substrate is immersed in a tank filled with coating resins and pigments dissolved or dispersed in water The substrate must act as an electrode and therefore must be metallic in practice steel is the most common material coated The substrate is connected to a power supply that provides a voltage between the substrate and another electrode which is also immersed in the electrocoating tank (see Figure 7) The electric potential between the electrodes causes a current flow that results in electrodeposition of charged resins and pigments onto the substrate When the coating process is complete, the substrate is removed from the tank and rinsed elevated temperatures then are used to cure the coating

Electrodeposition technology employs a process known as electrolysis that involves both electrophoresis and deposition Electrophoresis describes the movement of the charged coating particles in solution toward the substrate deposition occurring when resins and pigments are deposited on the substrate

Aqueous systems are necessary for electrocoating because the solvent needs to have a high dielectric constant to charge the resin particles Water unlike most organic solvents has a high dielectric constant

Operating Features

Resin Systems

Electrodeposition resins must be able to pick up a charge in solution Therefore resins must contain cationic or anionic molecular groups depending on the polarity of the electrodeposition system For AED systems resins generally contain free or neutralized carboxylic acid groups For CED systems film forming cations can be obtained as organic substituted ammonium macro ions such as RNH3 or R3NH+ (R denotes the resin) Resins with molecular weights in the range of 2 000 to 20 000 are typically used for electrodeposition of water based coatings

Many different resins are available for electrodeposition All resins have three common properties (1) they can be rendered soluble (2) made elastomeric (3) and crosslinked Amino-containing resins include acrylic and methacrylic esters styrene vinyl ethers and vinyl esters with unsaturated monomers that contain secondary or tertiary amino groups Epoxy based resins are most commonly used for electrocoating because they have excellent corrosion resistance Epoxy groups containing copolymers (e g glycidyl methacrylate) can react with amines to form the amino groups necessary for cationic behavior

Electrocoats contain pigments and extenders along with resins These materials must be deposited on the substrate at a similar rate or the proportions of pigment/extender to resin in the bath will change over time causing uneven formation Careful formulation of the coating prevents these

Figure 7

Electrodeposition

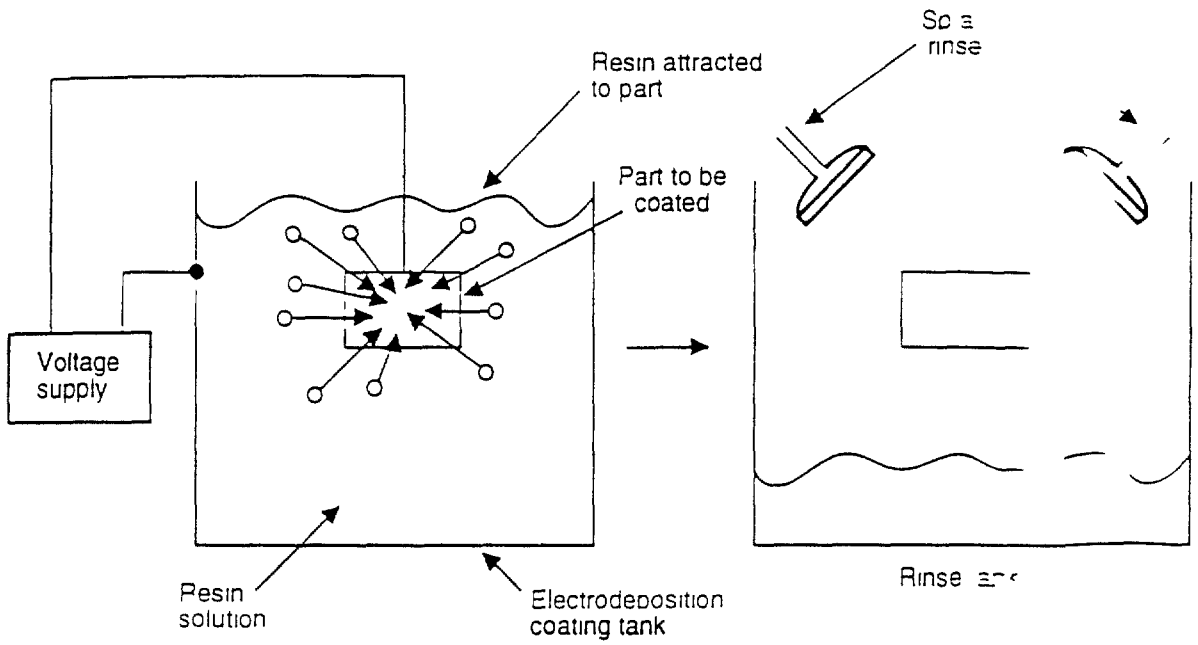

Source Eastern Research Group Inc

297

problems Pigments undergo electrophoresis because they adsorb resin molecules on their surface effectively forming a cation or anion out of the uncharged pigment particle The cathodic process (CED) is more successful than AED because of superior corrosion resistance and throwing power at low film thicknesses Most automotive coating plants today use CED

Application Methods

Substantial amounts of equipment are necessary for applying electrocoats resulting in high installation costs A dip tank is required that contains the anode (or cathode for AED) A power supply and rectifier also are required for large automobile body coating tanks, power supplies of 200V to 500V and up to 1500A are necessary Other required equipment includes water rinse facilities extra-clean application and curing areas and ultrafiltration units and baking ovens Coating large numbers of similar parts is the only way to justify the costs of installing electrodeposition equipment and providing operators with the required training

Applications

Electrodeposition systems are used most commonly for applying automotive primers because of their high ability to provide very thin evenly spread films for corrosion protection regardless of the shape of the substrate Uniform coating can be achieved on substrates with recesses, tapped holes, and sharp edges By "forcing" a dense film against a substrate electrodeposition provides excellent adhesion and resistance to corrosion Small metal parts can be coated in a dip tank Other parts such as auto bodies auto wheels appliances and other industrial products with high volume runs may be attached to a conveyor and coated in a line process Electrodeposition can be applied to galvanized steel surfaces as well as aluminum and other metals

Benefits

The electrodeposition process is successful in industrial applications for a number of reasons

- Good edge protection and uniform coating thickness
- High coating utilization (greater than 95 percent)
- An application process that is easy to automate and control
- Low levels of organic solvents and pollution because it uses waterborne coatings
- A closed loop process is possible reducing the potential for pollutants to escape

Limitations

- Electrodeposition systems have high capital expense
- Electrodeposited coatings are highly sensitive to contaminants
- To produce a high gloss finish the coating must contain a conductive pigment
- The metal substrate can dissolve into the coating, causing discoloration in anodic deposition

REFERENCES

Gupta S C and M C Shukla 1992 Cathodic electrodepositable coating compositions based on epoxy resins *Journal of the Oil Chemists and Colourists Association* 1992(9) 369

Ryder Peter C and Peter I Hope 1994 New environmentally acceptable metal coating systems In *Proceedings Pollution Prevention Conference on Low- and No-VOC Coating Technologies* U S Environmental Protection Agency Air and Energy Engineering Research Laboratory Organic Control Branch Research Triangle Park NC EPA-600/R-94-022 February, 1994

ULTRAVIOLET (UV) RADIATION- AND ELECTRON BEAM (EB)-CURED COATINGS

Pollution Prevention Benefits

Radiation curing relies on ultraviolet (UV) radiation or electron beam (EB) technology to cure solvent free coatings formulations Depending on the formulation and resin type some VOCs may be emitted from the resins although these emissions are quite low Some UV- and EB-cured coating systems emit virtually no VOCs Organic solvents are still needed for cleanup of uncured coating material unless the system is based on waterborne finishes

How Does it Work?

Radiation-cured coatings use radiation from ultraviolet light or electron beam sources to cure solvent-free coating systems These processes produce high-performance protective and decorative finishes for various product finishes Radiation curing can avoid the use of solvents entirely although solvent dilution might be required for some spray applications

Radiation curing has been adopted by the wood finishing industry (e g, flatstock fillers in particle boards hardwood flooring) because of the short

cure times and the high quality films that are produced without baking The graphic arts industry uses UV curing of various printing inks and coatings on paper cardboard and other substrates

Radiation-cured coatings usually are sprayed on the object and then subjected to radiation from either ultraviolet (UV) lamps or an electron beam (EB) generator (see Figure 8 UV curing system, and Figure 9 EB generator) The radiation creates free radicals in the coating, initiating crosslinking (or polymerization) of the film The curing process takes place almost instantaneously when radiation is applied rather than the minutes hours or even days that conventional coatings take

UV/EB cured coatings can use 100 percent reactive liquids eliminating solvent use altogether However certain resins can volatilize and become VOCs so zero VOC depends on the formulation UV/EB-cured coatings consist of

- An oligomer or prepolymer containing double-bond unsaturation
- A reactive solvent (e g, monomers with varying degrees of unsaturation)
- A photoinitiator to absorb the UV/EB radiation
- Pigments/dyes and other additives

Radiation Chemistry

The first type of radiation cured coatings to become available used free radicals in the polymerization process Free radicals are highly reactive molecules containing an unpaired electron They are produced when photoinitiator molecules undergo photochemical reactions on exposure to UV light or EB radiation Free radicals react with activated double bonds from acrylate groups activating a chain reaction that causes polymerization

During the 1980s a second type of photochemical reaction known as cationic polymerization emerged for use with radiation curing This process uses salts of complex organic molecules to initiate cationic chain polymerization in resins and monomers containing epoxides (oxirane rings) UV radiation is the most efficient method of creating the cationic intermediates EB radiation can be used but is inefficient and expensive Acrylic alkene double bonds and the oxirane ring can be activated directly by UV radiation without use of a photoinitiator but this method is much less efficient

Figure 8

Ultraviolet Curing System

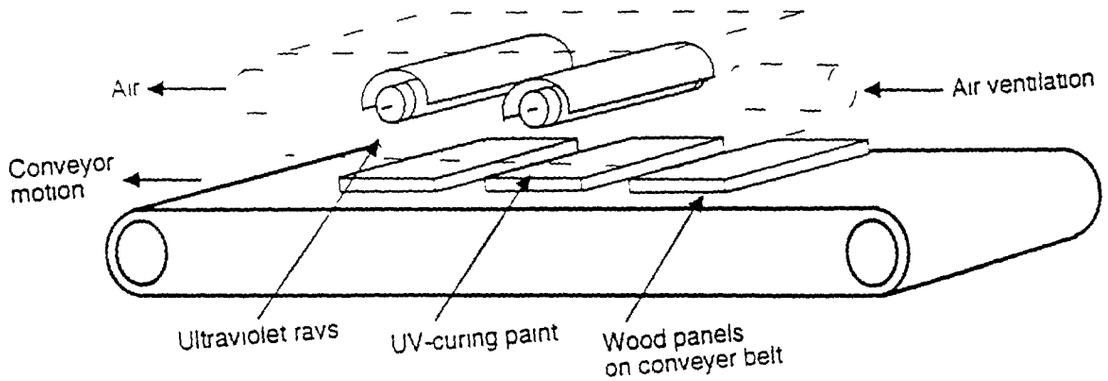

Source Eastern Research Group Inc

Figure 9

Electron Beam Generator

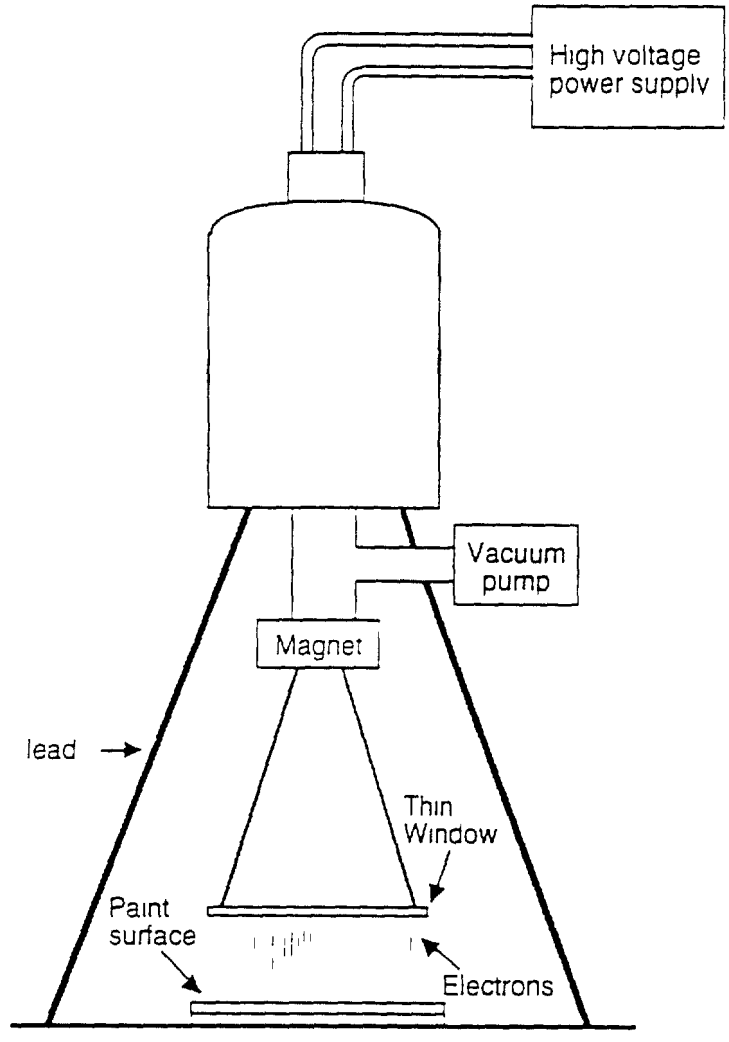

Source Eastern Research Group, Inc

302

Operating Features

Resin Systems

Resins used in conventional solvent-based coatings can be chemically modified for use in radiation-cured chemistries Resin types include epoxide polyester polyurethane polyether and others that are modified by introducing acrylate functionality, typically by reacting acrylic acid with alcohol groups or hydroxyethyl acrylate with acid groups

The general physical and chemical characteristics of the resins are retained after modification Crosslinking of the polymers in the coatings yields excellent chemical and physical resistance Polyester acrylates exhibit excellent properties in wood and paper coatings Urethane acrylates can produce films that are tough and abrasion resistant or soft and flexible The additional chemical reactions that are needed to produce a functional radiation curable resin however add to the cost hindering the acceptance of UV/EB coating systems (Holman 1992, Sawyer 1991) Cationic systems that use vinyl ethers epoxides and polyols require less chemical modification than acrylates therefore these resins should be cheaper although they are more limited in their applications than acrylates

Radiation-cured systems using acrylates in waterborne formulations such as water-soluble coatings or aqueous emulsions are available Wood and chipboard water-based coatings have successfully used acrylates although gloss and coating resistance is lower than with solvent formulations High coating specification requirements limits the application of waterborne products in other industries

Application Methods

Coating material is applied to the substrate by spraying, and is subsequently cured with UV- or EB radiation Because curing takes place so quickly it is advisable to allow a sufficient amount of time between application and curing for the coating to flow-out and achieve maximum gloss If this is not possible other precautions and equipment should be considered for use in achieving the desired gloss level (Sun Chemical, 1991) During this flow-out time emissions of VOCs could conceivably take place

Radiation Sources

The radiation source most commonly used in industry is the medium pressure mercury electrode arc lamp These lamps together with high voltage power supplies are compact and inexpensive and have lifetimes of thousands of hours The lamps can be retrofitted easily to existing production lines but they require an extraction system to remove excess heat and ozone that is generated by UV action on oxygen in the air A disadvantage of the lamps is

a prolonged warm up period that prevents on/off operation lamps that are modified by doping with metal ions to change spectral characteristics also have a shorter working life

An alternative type of lamp produces radiation through microwave excitation of the mercury vapor These lamps are more expensive but they have the advantage of instant startup/shutdown capabilities Further spectral modification of the lamps by metal ions does not reduce their working life

Electron beam generators are expensive complex and large These factors inhibit their more widespread use in radiation curing In addition oxygen has an inhibiting effect on free radical polymerization that is initiated by EB thus an inert atmosphere of nitrogen with oxygen concentrations of less than 100 ppm is required if adequate curing is to be achieved with EB generators (Holman, 1992) The high capital cost of EB curing equipment has limited the acceptance of EB-cured coatings (Paul 1986)

Radiation-curing technologies have lower energy requirements for curing compared to conventional solvent or waterborne coating systems The heat energy required to evaporate solvents or induce thermal reactions in conventional systems is orders of magnitude higher than the energy used in UV/EB systems Curing a thermoset acrylic resin with conventional technology, for instance requires 24 times the energy needed for curing clear lacquer with UV, and 12 times the energy needed for curing a pigmented coating with EB (O'Hara 1989)

Production Issues

Radiation curing occurs on line of sight as UV/EB radiation cannot travel around corners of three dimensional substrates Consequently UV/EB systems are most suitable for flat components such as wood panels and materials found in the graphic arts industries Recently 3 D radiation sources have begun to cure substrates with more complex surfaces

Because radiation-curing is a fast and relatively cool process inks and coatings can be cured on heat-sensitive substrates such as paper and wood. Coating color and opacity affect the curing rate Darker and more opaque inks block UV radiation and require longer exposure times for adequate curing Likewise thicker films and multiple films cure more slowly than thin or single films

EB curing is not affected by coating color or opacity, electrons penetrate pigmented coatings effectively to cure coatings in short exposure times The high energy of EB curing provides the highest margin of safety in applications where extractables or low odors are essential High energy also ensures

adequate conversion from oligomer to polymer so that very thick films and laminating adhesives also can be cured

Applications

UV curing is used in these industrial finishing areas

- Wood finishing
- Metal decorative coatings
- Automotive coatings
- Wire coatings
- Packaging coatings
- Floor finishing

UV curing has been investigated in the U S to replace thermally cured coatings for aluminum and galvanized steel cans UV-cured coatings have hardness and salt spray resistance that last 200 hr to 500 hr UV-cured coatings provide highly cross-linked 10-mil-thick films on both bare and insulated wire that are strong yet flexible

At least one company in Japan uses EB curing for metal coil stock EB has also seen limited use in high-volume printing operations UV curing also offers a low-cost, high throughput alternative for finishing automotive hubcaps and wheel rims

Liquid acrylic and liquid polyurethane-acrylic UV-cured coatings surpass press varnish and water-based coatings in quality and film lamination Likewise UV cured coatings have found a market niche in high-gloss vinyl floor coverings surpassing the conventional urethane coatings in ease of application and in abrasion solvent and stain resistance

UV coatings formulated from polyester styrene resins have been used as filler for chipboard Although commercially available the polyester-styrene system has not been applied widely because of styrene's volatility and the yellow color of the coating that is produced

Waterborne UV/EB Coating

Radiation-cured waterborne urethanes are available for the wood finishing industry Waterbornes range from systems that contain small amounts of water for viscosity reduction purposes to fully water-soluble coatings or latexes Water based latexes offer the greatest opportunity for pollution prevention because acrylate diluent monomers are usually not necessary for viscosity reduction in this type of coating The benefits of waterbornes include

- Reduced acrylate content (which lowers skin irritancy and odor) and reduces the levels of film shrinkage on cure
- Increased viscosity control
- Easy cleanup of equipment and spills with water
- Possibility of very low film thicknesses with low solids formulations
- Additives such as matting agents are easily added to water based systems
- Reduced flammability

Waterborne radiation-cured systems do have some drawbacks however including

- A water flash-off step before curing that often requires ovens or other dryers higher energy use and longer application/cure times (thin coatings on wood can result in absorption of the water allowing immediate radiation-curing)
- Certain wood substrates will show a grain-raising effect
- Reduced coating performance with some substrates or coating formulations

Waterborne UV systems have been evaluated by several authors (Mahon and Nason 1992 Stenson 1990) with promising results reported for wood finishing applications Mahon and Nason identified five outstanding UV-cured sealers and topcoats that meet certain performance criteria Resistance to cold cracking was the major potential problem reported with these coatings A radiation-curable urethane polymer was evaluated and tested on oak panels in accordance with the National Kitchen Cabinet Association test procedures Most of the coating properties rated excellent with only flow appearance and stain resistance to mustard rating average

Benefits

UV- and EB cured coatings have a number of benefits

- Eliminates or reduces solvent use virtually no VOC emissions
- High reactivity very rapid curing

306

- High productivity from rapid curing and instant startup and shutdown
- Low-temperature processing, which allows for the use of heat sensitive substrates such as plastic
- Long shelf life of coating materials
- Stable pot life because most coatings are single-component systems
- Relatively low capital investments in equipment
- Good film properties and performance such as hardness and improved solvent stain and abrasion resistance
- Higher non-volatile content that results in higher gloss better build, and lower shrinkage
- Lower energy use because of high efficiency UV/EB systems when compared to thermal ovens
- Equipment requires less space than curing ovens

Limitations

UV/EB technology has several drawbacks

- Higher cost coating formulations because of expensive raw materials and smaller volume
- Line-of sight curing is limited to flat or cylindrical materials that can be directly exposed to the radiation Radiation systems for 3-D substrates are being developed to overcome this limitation
- The presence of pigments reduces penetration by UV light, limiting use in high-build applications
- Polymers for radiation curing are highly reactive and can cause skin irritation and sensitization
- UV/EB curing is not always suitable for porous materials
- EB systems generally require an inert environment because atmospheric oxygen prevents curing of resins
- EB curing requires equipment with high capital costs

- Many systems have relatively high viscosity which causes processing and appearance problems
- No FDA approval for radiation cured coatings in direct contact with food
- Generally more expensive on a per pound basis than solvent borne products

Future use of UV/EB coatings depends on development of the following

- More highly developed UV equipment
- New products/markets for radiation processing technologies
- New 100 percent reactive monomers and oligomers that are nontoxic and low in viscosity
- New monomers oligomers and polymers that better adhere to metal substrates
- Lower cost materials

REFERENCES

Berejka Anthony 1992 Strategies for switching to UV/EB cure coatings *Modern Paint and Coatings* April p 64

Donhowe Erik T 1994 UV pollution prevention technology in can manufacturing In *Proceedings Pollution Prevention Conference on Low- and No-VOC Coating Technologies* U S Environmental Protection Agency Air and Energy Engineering Research Laboratory Organic Control Branch Research Triangle Park NC EPA 600/R 94 022 February 1994

Holman Dr R 1992 Solutions without solvents and the radcure alternative *Journal of the Oil Chemists and Colourists Association* 1992(12) 469

Laird Edwin C 1994 Water based and UV-cured coatings for plastics In *Proceedings Pollution Prevention Conference on Low- and No-VOC Coating Technologies* U S Environmental Protection Agency Air and Energy Engineering Research Laboratory Organic Control Branch Research Triangle Park NC EPA-600/R-94 022 February 1994

Mahon William F and Dale L Nason 1992 Testing UV-cure coatings systems for wood *Modern Paint and Coatings* June p 44

308

Oanneman Jeffrey 1988 UV Process Provides Rapid Cure for Compliant Wood Finishes *Modern Paint and Coatings* 78(2) 28-29 February

O'Hara K 1989 UV and Electron Beams Energy Efficient Methods of Curing *Polymer Paint Colour Journal* January p 11

Peaff George 1993 Taking the cure *Chemical Marketing Reporter* 244(17) 18

Pelling, D 1991 Infra red and ultra violet curing methods *Journal of the Oil Chemists and Colourists Association* 1991(8) 302

Sawyer Richard 1991 Tapping the value of UV-curables *Modern Paint and Coatings* June p 34

Stenson Dr Paul H 1990 Radiation-curable waterborne urethanes for the wood industry *Modern Paint and Coatings* June p 44

Stowe Richard W 1994 Radiation curing technology Ultraviolet and electron beam processing In *Proceedings Pollution Prevention Conference on Low- and No-VOC Coating Technologies* U S Environmental Protection Agency Air and Energy Engineering Research Laboratory Organic Control Branch Research Triangle Park NC EPA-600/R-94-022 February, 1994

Webster G 1991 Radiation curing where does it fit in? *Journal of the Oil Chemists and Colourists Association* 1991(1) 7

Wilkins G J 1992 Vinyl ethers in cationic and/or free radical induced UV-curable formulations *Journal of the Oil Chemists and Colourists Association* 1992(3) 105

SECTION THREE
EMERGING TECHNOLOGIES

Introduction

This section on emerging technologies describes coatings systems that are newly available "Emerging" in this context refers to innovative technologies that have just recently become commercially available and accepted for use in the marketplace These technologies are less well known than conventional alternatives

Emerging technologies should not be confused with technologies presently in research laboratories or those being reported in scientific papers such technologies are not yet available for industry consumption These technologies could be termed 'developing technologies Knowledge of developing technologies is important for coatings applicators concerned with improving cost or quality competitiveness technical performance environmental improvements etc when these technologies become commercially available

Developing and emerging technologies are not confined to innovative technologies alone Waterborne coatings are an example of a well established organic coating which is, however one of today's most dynamically developing technologies High performance waterborne coatings that are under development or emerging in the market are now able to perform the functions of traditional solvent borne coatings (such as automotive topcoats) High solids coatings also are under development that will greatly reduce VOC levels while maintaining good performance The coatings user should not ignore coating types (e g waterborne) based on past experiences with earlier versions of the technology The high rate of technological change results in products that can fill a new performance niche in a very short space of time

Coatings Literature

To monitor developments in technologies for organic coatings applicators need to read current literature i e trade magazines or scientific journals Good reference journals and magazines include

- *Journal of Coatings Technology*
- *Surface Coatings International*
- *American Paint and Coatings Journal*
- *Modern Paint and Coatings*
- *Metal Finishing*

In addition proceedings from scientific conferences can provide access to information about the latest in research An example is the proceedings of the *Pollution Prevention Conference on Low- and No-VOC Coatings Technologies* (EPA 600/R 94 022 February 1994) that was sponsored by

310

the U S Environmental Protection Agency

Recently published books can provide insight into the direction of new coatings research Other sources include trade associations that can direct the applicator to both literature and companies that are researching or developing new coatings technologies A list of trade associations appears in section five of this guide

Emerging Technologies

This section describes three emerging cleaner technologies for paints and coatings application

- Vapor permeation or injection-cured coatings
- Supercritical carbon dioxide as solvent
- Radiation induced thermally-cured coatings

VAPOR INJECTION CURE COATINGS

Description

Vapor injection curing (VIC) is a newly commercialized process that uses an amine vapor catalyst for rapid coating polymerization (Ballway 1993 Blundell and Bryan 1991 Cassil 1994) Two component urethane coatings contain a blocked accelerator that is activated during coating application with an amine vapor catalyst The amine vapor is made by an amine generator in a predetermined concentration and dispersed in an air stream channel in the spray gun The coating material and catalyst are mixed as they leave the spray gun This technology is a 'high solids" coating system because the coating still uses solvent in the formulation However ease of use and production efficiency arising from the rapid cure times provide reasons to use this two-component technology rather than low solids or high solids air or bake coating systems

VIC can produce a variety of finishes with outstanding urethane performance characteristics including excellent chemical solvent, and stain resistance high humidity and water resistance high mar and abrasion resistance and excellent color and gloss retention Pencil hardness can be achieved in 15 minutes to 45 minutes with no baking Dry times can be slashed from 8 hours to 1 hour without affecting pot life

The coatings can be used on a broad range of substrates including plastic steel aluminum, wood and castings Heat sensitive parts such as thermoplastics and thermosets are ideally suited to the low temperature cure

of used with VIC Other advantages of VIC include increased productivity (resulting from faster handling) decreased operating costs (caused by lowered energy consumption) decreased space for paint curing area reduced rejects (caused by uncured paint) and reduced recoating and tape time for multiple coats and colors

VIC is compatible with most conventional air assisted airless electrostatic and HVLP spray equipment Electrostatic equipment might need to be modified to accommodate the amine generator Some types of spray guns might have rubber or plastic seals that degrade when exposed to the amine (dimethylethanolamine) Air assisted airless spray guns have been used for some time and provide excellent results The amine catalyst generator is made of aluminum for light weight and mobility and uses dried and filtered air at 90 psi to 120 psi Capacity is limited to two spray guns Some solvent might be required to clean up unreacted resin (Pilcher 1988)

REFERENCES

Ballway, Bill 1993 Vapor injection technology for no-bake curing of urethanes *Metal Finishing* January p 62

Blundell D and H H Bryan 1991 Vapor injection cure of two pack polyurethane *Journal of the Oil Chemists and Colourists Association* 1991(3) 98

Cassil Linda 1994 New technology speeds curing of urethanes *Metal Finishing* May pp 33 35

SUPERCRITICAL CARBON DIOXIDE AS SOLVENT

Description

Supercritical CO fluid can be used to replace organic solvents in conventional coating formulations Union Carbide has developed a system marketed under the trade name UNICARB which replaces organic solvents for many liquid coatings Supercritical carbon dioxide is CO gas that has been heated above its critical temperature of 88°F and then compressed to approximately 1100 psi until its density approaches that of a liquid This fluid is similar in character to organic solvents and can be used to replace solvents in paint formulations reducing VOC levels by up to 80 percent The CO solvent is compatible with high molecular weight resins and existing painting facilities and procedures enabling finishers to use solvent borne resin formulations while substantially reducing VOC emissions

Application of Supercritical CO_2 solvent coatings requires investment in new equipment for paint mixing handling and spraying Supercritical CO_2

312

proportioning and supply units are available from at least one commercial supplier The unit mixes coating concentrates and CO_2 to produce a coating with the required viscosity (see Figure 10) The coating then is supplied to a specially designed spray gun Coating/solvent mixes are applied in the same way as conventional paint (Nordson 1991)

In 1991 five coating formulators were licensed to develop manufacture and market UNICARB systems These formulators are Akzo (automotive components furniture) BASF (automotive) Guardsman (furniture), Lilly (furniture plastics heavy equipment) and PPG Industries (automotive heavy equipment) (MP&C 1991)

REFERENCES

Busby D C C W Glancy K L Hoy C Lee and K A Nielsen 1991 Supercritical fluid spray application technology a pollution prevention technology for the future *Journal of the Oil Chemists and Colourists Association* 1991(10) 362

Miller Wayne Paul and Tom Morrison 1994 Supercritical fluid spray application of low pollution coatings for plastic substrates In *Proceedings Pollution Prevention Conference on Low- and No-VOC Coating Technologies* U S Environmental Protection Agency Air and Energy Engineering Research Laboratory Organics Control Branch Research Triangle Park NC EPA-600/R-94-022 February, 1994

MP&C 1991 Supercritical CO2 as a solvent update on Union Carbide's process *Modern Paint and Coatings* June p 56

Nordson 1991 UNICARB System Supply Units Amherst Ohio Product information

Figure 10

Supercritical Carbon Dioxide Spray Apparatus

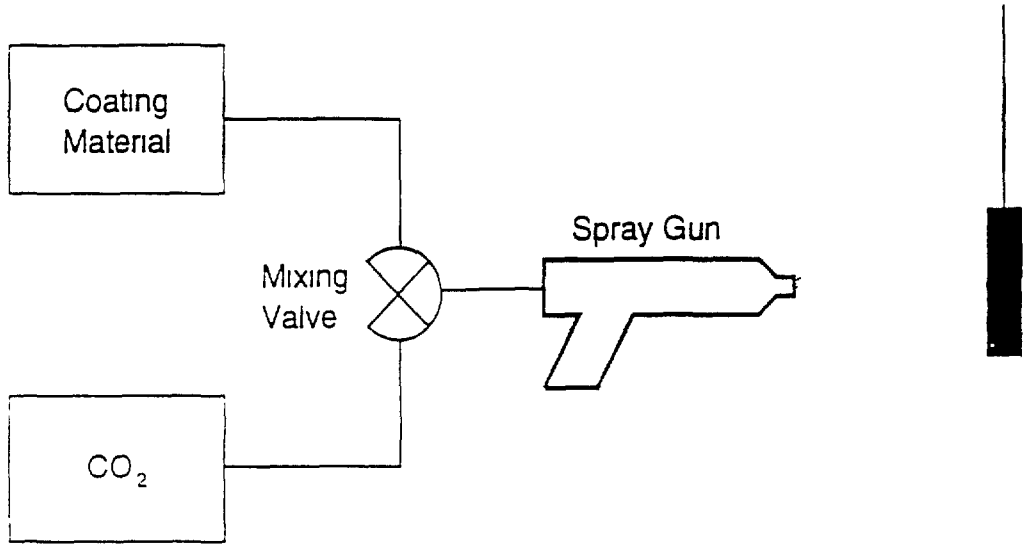

Source Eastern Research Group Inc

314

RADIATION-INDUCED THERMALLY-CURED COATINGS

Description

Infrared microwave laser or radio-frequency radiation can be used to heat a fluid coating and induce curing by thermal mechanisms The curing reaction is essentially similar to conventional curing in a convection oven except that heat is supplied by radiation (Paul 1986 Poullos 1991)

Laser heating applied by a robotic system produces accurate heat input for rapidly curing thermoplastic or water-based coatings The laser fusion system originally was designed to cure fluorocarbon thermoplastics such as polytetrafluoroethylene Curing of other powder and water based coatings is currently being tested

REFERENCES

Paul Swaraj 1986 *Surface Coatings Science and Technology* John Wiley & Sons New York New York

Poullos, Mark 1991 Laser Curing of Finishing Systems *Pigment and Resin Technology* 20(3) 6 March

315

SECTION FOUR
POLLUTION PREVENTION STRATEGY

Introduction

The organic coatings industry is affected primarily by guidelines or regulations governing volatile organic compound (VOC) content in liquid coatings VOC regulations are being developed at the federal level by the U S EPA for a number of categories of sources under the 1990 CAAA In addition regulatory authorities in several states have developed or are developing their own VOC standards California has long been a leader in regulations to limit solvent or VOC content in organic coatings and other states have since developed or are developing regulations

Current VOC standards for coatings vary depending on the particular industry in question Prior to 1970 the VOC content of most paint was well above 600 g VOC/l (5 lb/gal) Current major industrial paints now are limited to approximately 420 g VOC/l (3 5 lb/gal) of VOC Stricter legislation in the future will reduce these levels further

VOC reduction strategies can be pursued by either the coatings manufacturer or the coating user Manufacturer strategies differ from user strategies Manufacturers can work on reformulating existing coatings to reduce VOCs this is commonly done with high solids coatings Coatings manufacturers also can research or develop new coatings technologies which are inherently lower VOC or zero VOC Powder coating technology is an example of a zero VOC coatings system Various waterborne systems may also approach zero VOC or near-zero VOC content Manufacturers are investigating the possibilities for low or zero VOC technologies to replace present solvent based coating systems Their technical and commercial potential is assessed and decisions are made on whether to produce that coating system for sale and where (see for example Randall 1994)

Organic coating users are able to influence pollution prevention through their choice of coating technology and in house practices Industries that currently use coatings with high levels of solvents should investigate the possibilities that exist with low solvent low VOC coatings because of current and future environmental regulations liability issues sales potential (consumer demand) advertising possibilities and environmental friendliness This Cleaner Technologies Guide is directed toward coating users rather than manufacturers

Because VOC limits vary from industry to industry and since the regulations are often in a state of flux strict compliance methodologies cannot be provided for each industry Instead a general strategy is outlined which allows the industry to examine the issues and formulate a plan to move towards cleaner

316

APPENDIX 6

Information Resources on the Metal Finishing Industry

Environmental Pollution Prevention Project Clearinghouse

What Is EP3?

The objective of the Environmental Pollution Prevention Project (EP3) is to establish sustainable pollution prevention programs in developing countries The project provides in plant diagnostic assessments and technical assistance for industry and institutional support for governments It also offers comprehensive information and training services that support country specific programs to mitigate environmental problems resulting from urban and industrial pollution

What Is the EP3 Clearinghouse?

The EP3 Clearinghouse is an information service that collects, compiles and accesses technical reports books journal articles, conference proceedings, and other materials on pollution prevention and disseminates them to businesses and governments in developing countries The information provided by the clearinghouse supports and complements EP3 s other technical assistance activities

Clearinghouse staff access materials and data from the U S Environmental Protection Agency, the United Nations Environment Programme the World Bank other U S Agency for International Development (USAID) projects as well as other U S and international sources to provide information on all aspects of pollution prevention with emphasis on industrial applications of cleaner production technologies While its focus is pollution prevention the EP3 Clearinghouse also provides information on a broad range of environmental issues that may be of concern to developing countries and works with INFOTERRA/USA to obtain current worldwide environmental information

Who Are Its Clients?

The EP3 Clearinghouse was established primarily to respond to requests from environmental professionals — both in the private sector and in government — in developing countries Additional audiences include USAID Missions throughout the world other USAID programs, USAID staff in Washington, and U S vendors of clean technologies

Scope of EP3's Information Resources

The EP3 Clearinghouse maintains an in house collection of pollution prevention materials that are available upon request These materials include

- industry specific case studies and reports that describe the processes, raw materials, wastes, flows, production costs and effects of applying pollution prevention techniques and cleaner production technologies
- information on the use and effectiveness of pollution prevention methods to address urban pollution problems,
- policy studies and guidance documents to support the development of institutions and government programs that encourage pollution prevention,
- technical guides that outline how to establish in plant pollution prevention programs and how to conduct diagnostic assessments at different types of industrial facilities and
- training materials videos and slides designed to increase awareness of the environmental benefits and improved production efficiency that can result from the application of pollution prevention techniques

Clearinghouse staff also maintain a number of electronic databases that enable them to access additional resources to supplement in house materials

Where possible materials are available in French and Spanish as well as English Many documents are available free of charge, but the clearinghouse reserves the right to charge for reproductions of videos slide shows large documents or other specialized materials

To Request Information

To request information from the clearinghouse or to obtain a list of EP3 Clearinghouse holdings complete the form on the back and fax it to Audrey Pendergast Clearinghouse Manager at 703/351 6166 To access the clearinghouse via Internet use apenderg@habaco com In Egypt contact Mostafa Eissa at tel (20-2)341-7595 or fax (20-2)340-93

EP3 is sponsored by the U.S. Agency for International Development

318

Environmental Pollution Prevention Project Clearinghouse

To Audrey Pendergast, EP3 Clearinghouse
1530 Wilson Boulevard, Suite 900
Arlington, VA 22209-2406, USA
Fax 703/351-6166
Tel 703/351-4004

In Egypt Mostafa Eissa, Sr Project Engineer
Dr Samir El Mowafi, Sr P2 Engineer
20A El Mansour Mohamed St
Zamalek, Cairo 11211
EGYPT
Tel (20-2) 341-7595
Fax (20-2) 340-9343

Name _____
Organization _____
Street Address _____
City _____ District/State _____
Postal Code _____ Country _____
Tel no _____ Fax no _____

Address to Which Materials Are to Be Sent (if different from above) _____

City _____ District/State _____
Postal Code _____ Country _____

Date of Request _____ Date Needed _____

Materials/Information Requested _____

How do you plan to use the information? _____

Who will be the ultimate user of the information? _____

To be completed by the EP3 Clearinghouse

Action taken _____

319

Trade associations pertaining to Waste Minimization in Metal Parts Cleaning

Abrasive Engineering Society (AES)
1700 Painters Run Rd
Pittsburg PA 15243
(412) 221-0900

Aerospace Industries Association of America (AIA)
1725 DeSales St NW
Washington DC 20036
(202) 347-2315

Air Pollution Control Association (APCA)
P O Box 2861
Pittsburgh, PA 15230
(412) 621-1090

American Chemical Society
1155 16th St , NW
Washington, DC 20036
(202) 872-4600

American Electronics Association (AEA)
2600 El Camino Real
Palo Alto CA 94306
(415) 327-9300

American Electroplaters Society (AES)
1201 Louisiana Ave
Winter Park, FL 32789
(305) 647 1197

American Society for Metals (ASM)
Metal Parks OH 44073
(216) 338-5151

American Society for Testing and Materials (ASTM)
1916 Race St
Philadelphia PA 19103
(215) 299 5400

Association for Finishing Processes (AFP)
P O Box 930
One SME Dr
Dearborn MI 48128
(313) 271 1500

Chemical Coaters Association (CCA)
Box 241
Wheaton IL 60187
(312) 668-0949

Chemical Manufacturers Association (CMA)
1825 Connecticut Ave NW
Washington, DC 20009
(202) 328-4200

Chemical Specialties Manufacturers Association (CSMA)
1001 Connecticut Ave NW
Washington DC 20036
(202) 872 8110

Electrochemical Society (ECS)
P O Box 2071
Princeton NJ 08540
(609) 924-1902

Electronic Industries Association (EIA)
2001 Eye St , NW
Washington, DC 20006
(202) 457-4900

Fabricating Manufacturers Association (FMA)
7811 N Alpine
Rockford, IL 61111
(818) 654-1902

Federation of Societies for
Coatings Technology (FSCT)
1315 Walnut
Philadelphia, PA 19107
(215) 545-1506

Halogenated Cleaning Solvents
Association (HCSA)
Affiliate of Synthetic Organic
Chemical Manufacturers
Association Inc
1075 Central Park Ave
Scarsdale NY 10583

Institute for Interconnecting and
Packaging
Electronic Circuits (IPC)
3451 Church St
Evanston, IL 60203
(312) 677-2850

Metal Fabricating Institute (MFI)
710 S Main St
Rockford, IL 61105
(815) 965-4031

Metal Finishing Suppliers
Association (MFSA)
1025 E Maple Rd
Birmingham MI 48011
(313) 646-2728

National Association of
Corrosion Engineers (NACE)
1440 S Creek Dr
Houston TX 77084
(713) 492-0535

National Association of
Manufacturers (NAM)
1776 F St NW
Washington DC 20006
(202) 331-3700

National Association of Metal
Finishers (NAMF)
111 E Wacker Dr
Chicago, IL 60601

National Solid Wastes
Management Association
(NSWMA)
1120 Connecticut Ave NW
Washington, DC 20036
(202) 659-4613

Semiconductor Equipment
and Materials Institute (SEMI)
625 Ellis St, Suite 212
Mountain View, CA 94043
(415) 964-5111

Semiconductor Industry
Association (SIA)
20380 Town Center Lane Suite 155
Cupertino, CA 95014
(408) 255-3522

Society of Automotive Engineers
(SAE)
400 Commonwealth Dr
Warrendale PA 15096
(412) 776-4841

Water Pollution Control
Federation (WPCF)
2626 Pennsylvania Ave
Washington, DC 20037
(202) 337-2500

List of Periodicals

American Paint and Coatings Journal
American Paint Journal Co,
2911 Washington Ave,
St Louis, MO 63103

Assembly Engineering
Hitchcock Publishing Co,
Geneva Rd.,
Wheaton, IL 60187

Cleaning - Finishing - Coating Digest
American Society for Metals,
Metals Park, OH 44073

Electronic Packaging and Production
Milton S Kiver Publications, Inc,
222 W Adams St,
Chicago, IL 60606

Industrial Finishing
Hitchcock Publishing Co
Hitchcock Building,
Wheaton IL 60187

Iron Age
Chilton Co Inc
Radnor PA 19089

Journal of Coatings Technology
Federation of Societies for Coating Technology,
1315 S Walnut St, Suite 830
Philadelphia PA 19107

Metal Finishing
Metals and Plastics Publications Inc
One University Plaza
Hackensack NJ 07601

Metal Finishing Guidebook and Directory
Metals and Plastics Publications Inc
One University Plaza
Hackensack, NJ 07601

Metal Finishing Journal
Fuel and Metallurgical Journals Ltd,
John Adam House,
John Adam St,
London WC 2N 6JH, England

Metal Finishing Plants and Processes
Finishing Publications Ltd
28 High St,
Teddington Middlesex England

Metal Progress
American Society for Metals
Metals Park OH 44073

Plating and Surface Finishing
American Electroplaters Society, Inc
1201 Louisiana Ave,
Winter Park, FL 32789

List of Abstract Publications

American Society for Metals
Annual Review of Metals Literature
Cleaning and Finishing Section L

American Society for Testing and Materials
Special Technical Publication 90
Metal Cleaning Abstracts

Metal Finishing Abstracts
Finishing Publications Ltd,
28 High St,
Teddington Middlesex, England

Trade associations pertaining to Alternative Metal Finishing

Abrasive Engineering Society
108 Elliot Dr
Butler PA 16001
412/282-6210

Aluminum Anodizers Council
1000 N Rand Rd Ste 214
Wauconda IL 60084
708/526-2010
708/526 3993 FAX

Aluminum Association
900 19th St N W
Washington DC 20005
202/862 5100
202 862-5164 FAX

American Chemical Society
(ACS)
11 55 16th St N W
Washington, DC 20036
202/872-4600
202/872 6067 FAX

American Electroplaters' and
Surface Finishers' Society
(AESF)
12644 Research Pkwy
Orlando, FL 32826
407/281 6441
407/281-6446 FAX

American Galvanizers
Association
12200 E Iliff Ave Ste 204
Aurora CO 80014-1252
303/750-2900
303/750 2909 FAX

American Institute of Chemical
Engineers (AIChE)
345 E 47th St
New York NY 10017
212/705 7338
212/752-3297 FAX

American National Standards
Institute (ANSI)
11 West 42nd St 13th Floor
New York NY 10036
212/642 4900
212/398-0023 FAX

American Society for
Nondestructive Testing (ASNT)
1711 Arlington Lane
P O Box 28518
Columbus, OH 43228 0518
614/274 6003
800/222 2768
614/274 6899 FAX

American Society for Quality
Control (ASQC)
310 W Wisconsin Ave
Milwaukee WI 53203
414/272 8575
414/272 1734 FAX

American Sociely for Testing
Materials (ASTM)
1916 Race St
Philadelphia PA 19103 1187
215/299-5400
215/977 9679 FAX

American Society of
Electroplated Plastics (ASEP)
1101 14th St N W Ste 1100
Washington DC 20005
202/371 1323
202/371 1090 FAX

American Zinc Association
1112 16th St N W Ste 240
Washington DC 20036
202/835 0164
202/835 0155 FAX

ASM International
Materials Park OH 44073
216/338-5151
216/338 4634 FAX

Associacio Brasileira De
Tratmentos De Superficie
(ABTS)
Av Paulista 1313 9° Andar
Conj 913 Cep 01311
Sao Paulo SP Brazil
55 11 289 75 01
55 11 251 25 88 FAX

Association Francaise Des
Ingenieurs Et Techniciens De
L'Electrolyse Et Des
Traitements De Surface
5 rue Le Bua
Paris 75020 France
14 030 06 80

Australasian Institute of Metal
Finishing
Clunies Ross House
191 Royal Parade
Parkville Victoria 3052
Australia
613 347 2299
613 347 9162 FAX

Bumper Recycling Association
of North America (BRANA)
1730 N Lynn St Ste 502
Arlington VA 22209
703/525 1191
703/276 8196 FAX

Cadmium Council Inc
12110 Sunset Hills Rd , Ste 110
Reston VA 22090
703/709-1400
703/709-1402 FAX

Canadian Association of Metal
Finishers
14 Vintage Ln
Thornhill Ontario
L3T I X6 Canada
416/731-4458
416/731-5884 FAX

Chemical Coaters Association
International (CCAI)
P O Box 54316
Cincinnati OH 45254
513/624 6767
513/624-0601 FAX

Coated Abrasives
Manufacturers' Institute
1300 Sumner Ave
Cleveland OH 44115 2851
216/241 7333
216/241 0105 FAX

Copper Development
Association Inc
260 Madison Ave 16th Fl
New York NY 10016
212/251-7200
212/251 7234 FAX

Deutsche Gesellschaft fur
Galvano und Oberflach-
entechnik e V (DGO)
Horionplatz 6 D-4000
Dusseldorf Germany
211 13 23 81

Electrochemical Society (ECS)
10 S Main St
Pennington NJ 08534
609/737-1902
609/737 2743 FAX

Gas Research Institute
8600 W Bryn Mawr Ave
Chicago IL 60631
313/399 8100
312/399 8170 FAX

Gold Institute
1112 16th St N W Ste 240
Washington DC 20036
202/835 0185
202/835 0155 FAX

Halogenated Solvents Industry
Alliance
2001 L St N W Ste 506
Washington DC 20036
202/775 2790
202/223 7225 FAX

Institute for Interconnecting &
Packaging Electronic Circuits
(IPC)
7380 N Lincoln Ave
Lincolnwood IL 60646
708/677 2850
708/677 9570 FAX

Institute of Metal Finishing
(IMF)
Exeter House
48 Holloway Head Birmingham
B1 INQ England
44 21622 73 87
44 21666 63 FAX

International Copper
Association Ltd
260 Madison Ave
New York NY 10016
212/251 7240
212/251-7245 FAX

International Hard Anodizing
Association
14300 Meyers Rd
Detroit MI 48227
313/834 5000
313/834 5422 FAX

International Lead Zinc
Research (ILZR)
2525 Meridian Parkway
Research Triangle Park NC
27709
919/361-4647
919/361 1957 FAX

International Magnesium Association
1303 Vincent Pl Ste 1
McLean VA 22101
703/442-8888
703/821 1824 FAX

International Precious Metals Institute (IPMI)
4905 Tilghman St
Allentown PA 18104
215/395 9700
215/395-5855 FAX

International Society for Hybrid Microelectronics (ISHM)
P O Box 2698
Reston VA 22090 2698
703/471 0066
800/232 4746
703/471 1937 FAX

International Thermal Spray Association
12 Thompson Rd
East Windsor, CT 06088
203/623 9901
203/623-4657 FAX

Lead Industries Association Inc
295 Madison Ave
New York NY 10017
212/578 4750
212/684-7714 FAX

Manufacturers Jewelers & Silversmiths of America
100 India Street
Providence RI 02903
401/2743840
401/274-0265 FAX

Mass Finishing Job Shops Association
1859 Onion Cneek Rd
Colville, WA 99114-9623
509/732-6191
509/732 6191 FAX

Metal Finishing Association
Federation House
10 Vyse St
Birmingham B18 6LT England
44 21 236 26 57
44 21236 39 21 FAX

Metal Finishing Suppliers Association (MFSA)
801 N Cass Ave
Westmont, IL 60559
708/887-0797
708/887-0799 FAX

National Association of Architectural Metal Manu facturers (NAAMM)
600 5 Federal St Ste 400
Chicago IL 60605
312/922 6222
312/922-2734 FAX

National Association of Corrosion Engineers (NACE)
1440 S Creek Dr
Houston TX 77084-4906
713/492 0535
713/492 8254 FAX

National Association of Metal Finishers (NAMF)
401 N Michigan Ave
Chicago IL 606114267
312/644 6610
312/321-6869 FAX

Nickel Development Institute
214 King St W Ste 510
Toronto Ontario
M5H 356 Canada
416/591 7999
416/591 7987 FAX

Porcelain Enamel Institute
1101 Connecticut Ave N W
Ste 700
Washington DC 20036
202/857-1134
202/223 4579 FAX

Society for the Advancement of Material and Process Engineering (SAMPE)
1611 Parkins Dr
Covina CA 91724
818/331 0616
818/332 8929 FAX

Society of Automotive Engineers (SAE)
400 Commonwealth Dr
Warrendale PA 15096
412/772 7129
412/776 2103 FAX

Society of Manufacturing Engineers (SME)
One SME Dr P O Box 930
Dearborn MI 48121
313/271 1500
313/271-2861 FAX

Society of Plastics Engineers (SPE)
14 Fairfield Dr
Brookfield CT 06804 0403
203/775 0471
203/775 8490 FAX

Society of Vacuum Coaters
(SVC)
440 Live Oak Loop
Albuquerque NM 87122
505/298 7624
505/298 7942 FAX

Tin Information Center
1353 Perry St
Columbus OH 43201
614/424/6200
614/424 6924 FAX

Titanium Development
Association
4141 Arapahoe Ave Se 100
Boulder CO 80303
303/443 7515
303/443 4406 FAX

Trade associations pertaining to Organic Coating Removal

Association for Finishing Processes
of the Society of Manufacturing
Engineers
P O Box 930, One SME Drive
Dearborn, MI 48121
tel (313)271-1500

Federal Societies for
Coating Technology
492 Norristown Road
Bluebell, PA 19422
tel (215) 940-0777

International Organization
for Standardization
1, rue de Varembe
Case Postale 56
CH-1121 Geneva 20
SWITZERLAND
tel 22 7490111

National Paint & Coatings Assoc
1500 Rhode Island Avenue, N W
Washington, D C 20005
tel (202)462-6272

Powder Coating Institute
1800 Diagonal Rd , Ste 370
Alexandria, VA 22314
tel (703)684-1770

Radtech International
60 Revere Drive, Ste 500
Northbrook IL 60062
tel (708)480-9576

SAE
400 Commonwealth Drive
Warrendale, PA 15096-0001
tel (412)776-4841

Trade associations pertaining to Organic Coating Replacements

American Institute of Chemical Engineers (AIChE)
345 E 47th St
New York NY 10017
212/705 7338
212/752 3297 FAX

American Society for Nondestructive Testing (ASNT)
1711 Arlington Lane
P O Box 28518
Columbus OH 43228 0518
614/274 6003
800/222 2768
614/274 6899 FAX

American Society for Testing Materials (ASTM)
1916 Race S
Philadelphia PA 19103 1187
215 299 5400
215/977 9679 FAX

American National Standards Institute (ANSI)
11 West 42nd St 13th Floor
New York NY 10036
212/642 4900
212/398 0023 FAX

American Chemical Society (ACS)
1155 16th St N W
Washington DC 20036
202/872 4600
202/872 6067 FAX

American Society for Quality Control (ASQC)
310 W Wisconsin Ave
Milwaukee WI 53203
414/272 8575
414/272 1734 FAX

Architectural Spray Coaters Association (ASCA)
230 W Wells Ste 311
Milwaukee WI 53203
414/273 3430

Association of Metal Sprayers (AMS)
5 Keats Rd
Stratford upon Avon
Warwickshire CV37 7JL
England
(789) 299661

Association of Finishing Processes of the Society of Manufacturing Engineers
P O Box 930
One SME Dr
Dearborn MI 48121
313/271 1500

Association of Industrial Metallizers Coaters and Laminators (AIMCAL)
211 N Union St Ste 100
Alexandria VA 22314
703/684 4868
703/684 4873 FAX

European Confederation of Paint Printing Ink and Artists Colours Manufacturers Associations (CEPE)
4 ave E Van Nieuwenhuyse
B 1160 Brussels Belgium
(2) 6767480

European Technical Association for Protective Coatings (ETAPC)
Rijenlanddreef 19 bus 5
B 2170 Merksem Belgium
(3) 6463373

European Coil Coating Association
47 rue Montove
B 1040 Brussels Belgium
(2) 5136052

Federation of Societies for Coatings Technology (FSCT)
492 Norristown Rd
Blue Bell PA 19422
215/940 0777
215/940 0292 FAX

Federation of the Associations of Technicians of the Paint Varnish Enamel and Printing Ink Industries of Continental Europe (FATIPEC)
28 rue St Dominique
F 75007 Paris France
(1) 48675224

Halogenated Solvents Industry Alliance (HSIA)
2001 L St N W Ste 506
Washington DC 20036
202/775 2790
202/223 7225 FAX

International Committee to Coordinate Activities of Technical Groups in the Coatings Industry (ICCATCI)
34 chemin du Halage
F 95540 Méry sur Oise France
(1) 48675224

National Association of Metal Finishers (NAMF)
401 N Michigan Ave
Chicago IL 606114267
312/644 6610
312/321 6869 FAX

National Coil Coaters Association (NCCA)
401 N Michigan Ave Chicago
IL 60611 4267
312/644 6610
312/321 6869 FAX

National Paints & Coatings Association (NPCA)
1500 Rhode Island Ave NW
Washington DC 2000
202/462 6272

National Paint Distributors (NPD)
701 Lee St Ste 1020
Des Plaines IL 60016
708/297 6400

National Association of Pipe Coating Applicators (NAPCA)
Commercial Natl Bank Bldg
8th Fl 333 Texas St
Shreveport LA 71101 3673
318/227 2769
318/222 0482 FAX

National Spray Equipment Manufacturers Association (NSEMA)
550 Randall Rd
Elyria OH 44035
216/366 6808
216/892 2018 FAX

Paint Body and Equipment Association (PBEA)
c/o Martin Fromm and Assoc
9140 Ward Pky
Kansas City MO 64114
816/444 3500
816/444 0330 FAX

Powder Coating Institute (PCI)
1800 Diagonal Rd Ste 370
Alexandria VA 22314
703/684 1770

Radtech International
60 Revere Drive
Suite 500
Northbrook IL 60062
708/480 9576

Roof Coatings Manufacturers Association (RCMA)
6000 Executive Blvd Ste 201
Rockville MD 20852 3803
301/230 2501
301/881 6572 FAX

Society of Automotive Engineers (SAE)
400 Commonwealth Dr
Warrendale PA 15096
412/772 7129
412/776 2103 FAX

Society of Manufacturing Engineers (SME)
One SME Dr P O Box 930
Dearborn MI 48121
313/271 1500
313/271 2861 FAX

Society of Plastics Engineers (SPE)
14 Fairfield Dr
Brookfield CT 06804 0403
203/775 0471
203/775 8490 FAX

Steel Structures Painting Council (SSPC)
4400 5th Ave
Pittsburgh PA 15213 2683
412/268 3327
412/268 7048 FAX

Transocean Marine Paint Association (TMPA)
Prins Hendrikkade 14
NL 3071 KB Rotterdam
Netherlands
(10) 4134477

APPENDIX 7

EP3 Metal Finishing and Electroplating Case Studies

HBI-94-026-02 Pub 10/31/94

Environmental Pollution Prevention Project

CASE STUDY

Pollution Prevention Assessment for an Electroplating Facility

What is EP3?

The amount of pollutants and waste generated by industrial facilities has become an increasingly costly problem for manufacturers and a significant stress on the environment. Companies, therefore, are looking for ways to reduce pollution at the source as a way of avoiding costly treatment and reducing environmental liability and compliance costs

The United States Agency for International Development (USAID) is sponsoring the Environmental Pollution Prevention Project (EP3) to establish sustainable programs in developing countries transfer urban and industrial pollution prevention expertise and information, and support efforts to improve environmental quality These objectives are achieved through technical assistance to industry and urban institutions, development and delivery of training and outreach programs and operation of an information clearinghouse

EP3's Assessment Process

EP3 pollution prevention diagnostic assessments consist of three phases *pre-assessment assessment* and *post assessment* During *pre-assessment* EP3 in country representatives determine a facility s suitability for a pollution prevention assessment sign memoranda of agreement with each facility selected and collect preliminary data During *assessment* a team comprised of U S and in-country experts in both pollution prevention and the facility 's industrial processes gathers more detailed information on the sources of pollution and identifies and analyzes opportunities for reducing this pollution Finally, the team prepares a report for the facility s management detailing its findings and recommendations (including cost savings, implementation costs and payback times) During *post-assessment*, the EP3 in-country representative works with the facility to implement the actions recommended in the report

Summary

This assessment evaluated an electroplating facility The objective of the assessment was to propose a program of pollution prevention that would (1) reduce the quantity of toxics, raw materials, and energy used in the manufacturing process, thereby reducing pollution and worker exposure, (2) demonstrate the environmental and economic value of pollution prevention methods to the electroplating industry and improve operating efficiency and product quality

The assessment was performed by an EP3 team comprised of an expert in electroplating and a pollution prevention specialist

Overall the assessment identified 18 pollution prevention opportunities at this facility Recommendations for pollution prevention include replacing the solvent degreaser with an alkaline cleaner improving process solution monitoring and capturing and returning 100 percent of chromium dragout to the process solution

Facility Background

This facility is an electroplater that performs zinc, nickel, brass and chrome plating Seventy percent of production is comprised of brass articles The facility operates with 23

331

Figure 1 Overview of Facility's Electroplating Process

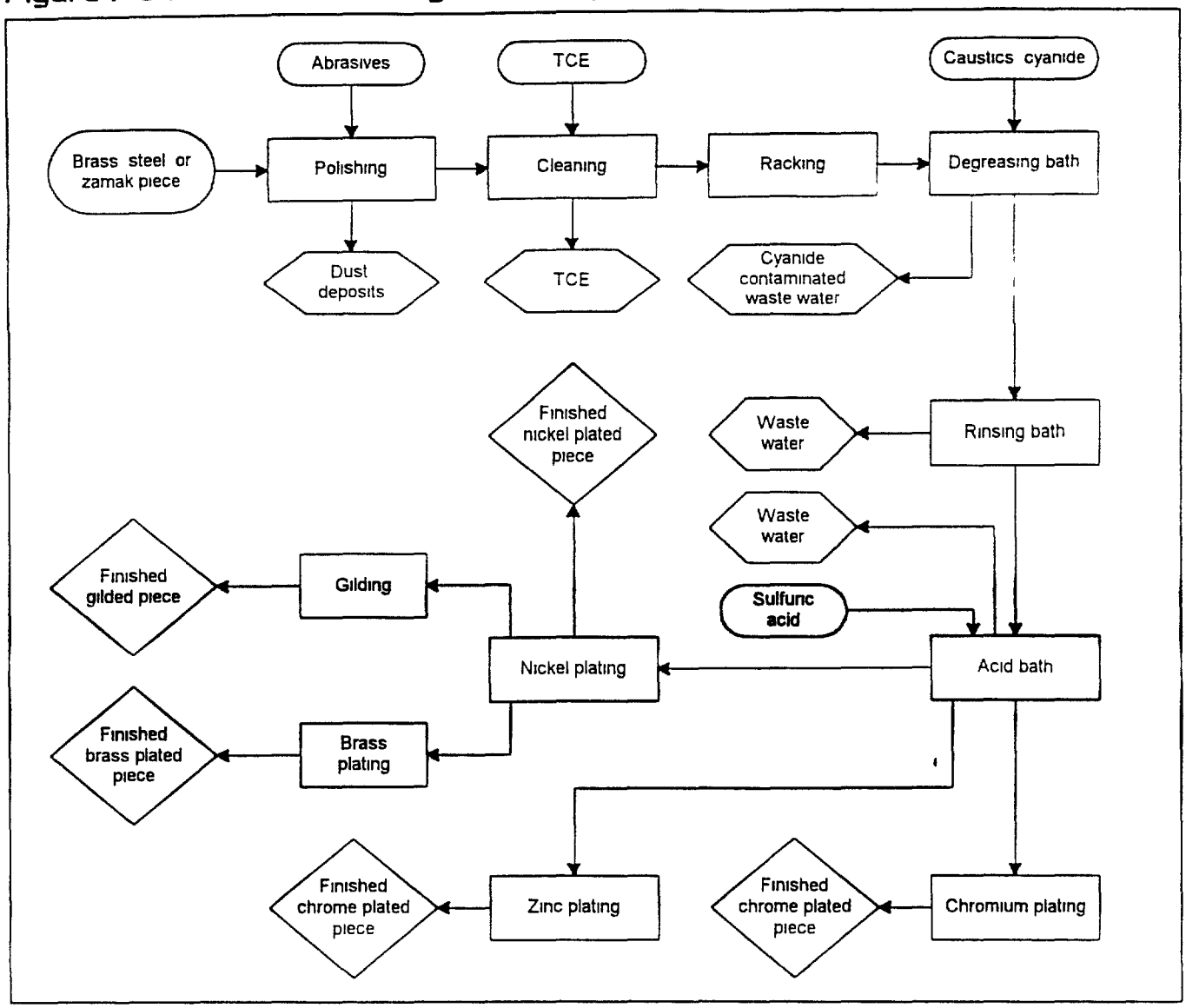

workers who work in a single 8 hour shift 300 days a year Approximately 15 m of metal surface is finished per day

Manufacturing Process

Facility operations can be divided into five main steps (1) polishing (2) cleaning (3) racking (4) electroplating and (5) gilding as shown in **Figure 1**

Parts are first polished Polishing paste is applied to stationary belt sanders to provide the necessary abrasion The parts are then polished with the sanders Dust generated by the polishing process is collected by vacuums connected to each machine

Prior to electroplating many parts are cleaned in a vapor degreaser that uses trichloroethylene (TCE) to remove grease and other impurities Parts removed from the degreaser are dried with paper towels

The facility electroplates many different kinds of parts Several parts are hung on special racks that are constructed specifically to handle the part Other pieces are plated in baskets that are placed directly in the solutions

The electroplating line consists of washing tanks rinsing tanks, and nickel and chrome plating and recuperation baths A copper cyanide bath is located across from the line and is used to plate zamak before it is plated to nickel and chrome All plating is manual Times are not exact, and there is considerable variation in soaking times among different parts and different workers

Before gilding parts are rinsed in special rinse baths They are then immersed in gilding solution for less than a minute

HBI 95 076-05 Pub 12/31/95

EPP Environmental Pollution Prevention Project

CASE STUDY

Pollution Prevention Assessment for an Electroplating Facility

Executive Summary

This assessment details the evaluation of the nickel and zinc plating lines at a motorcycle component supplier. The objectives of this assessment were to: 1) identify pollution prevention options that would reduce the quantity of toxics, raw materials, and energy used in the manufacturing process and thereby reduce industrial pollution and worker exposure to toxic chemicals; 2) demonstrate the environmental and economic value of a comprehensive pollution prevention assessment, and 3) improve manufacturing competitiveness and product quality for this facility.

The assessment identified 20 pollution prevention opportunities. 10 were classified as a #1 (high) priority, 8 as a #2 (medium) priority, and 2 as a #3 (low) priority. These options will generate financial benefits estimated at US$93,500 annually (plus an additional one time savings of $1,000) if all the requirements and assumptions are met. The total investment for the proposed changes amounts to a one time cost of $10,060 and an annual cost of $640 (the figures for both costs and benefits do not include several opportunities which were difficult to quantify due to lack of information, but are assumed to provide cost savings). Quantified payback periods are all relatively short, ranging from one week to three months.

By implementing the recommendations, the company can expect significant benefits in many areas. These include reduced volume of wastewater, reduced chemical requirements, reduced reject rates, and a lower exposure of workers and the surrounding environment to hazardous chemicals.

Facility Background

This facility is involved in the manufacture of motorcycle components such as baskets and carrier racks, household metal wares, and other metal products. The company has two plating plants, located 500 meters apart, one for nickel and chrome deposition and one for zinc plating. Both plants have been open since 1976. They employ a total of 224 workers and operate one shift per day, 5 days a week.

Manufacturing Process

The manufacturing process utilizes about 600-800 tons of metal annually. Metal material inputs consist of metal sheet, rods, and tubes. Rods, tubes, and some sheet metal go to the cutting machines while the rest of the sheet metal goes directly to the pressing/stamping machines (approximately 30% of the input ends up as scrap). Subsequently, there is metal welding followed by grinding of unfinished parts. Waste from the grinding process includes metal dust and fines.

After grinding, parts are sent to either the zinc or the nickel/chrome plate lines. Each line has its own pretreatment equipment, but both are basically the same. The first pretreatment step consists of removing grease and particulates from the surface of unfinished parts using diesel oil as a solvent. Other common pretreatment operations (such as degreasing, pickling, and rinsing) follow.

The zinc plating operation is divided into two systems: barrel and rack plating. A semi-automatic machine is used in the barrel system and manual equipment is used in the rack system. Parts are plated with zinc and

EP3 is sponsored by the U.S. Agency for International Development

Figure 1 Overview of Facility's Electroplating Process

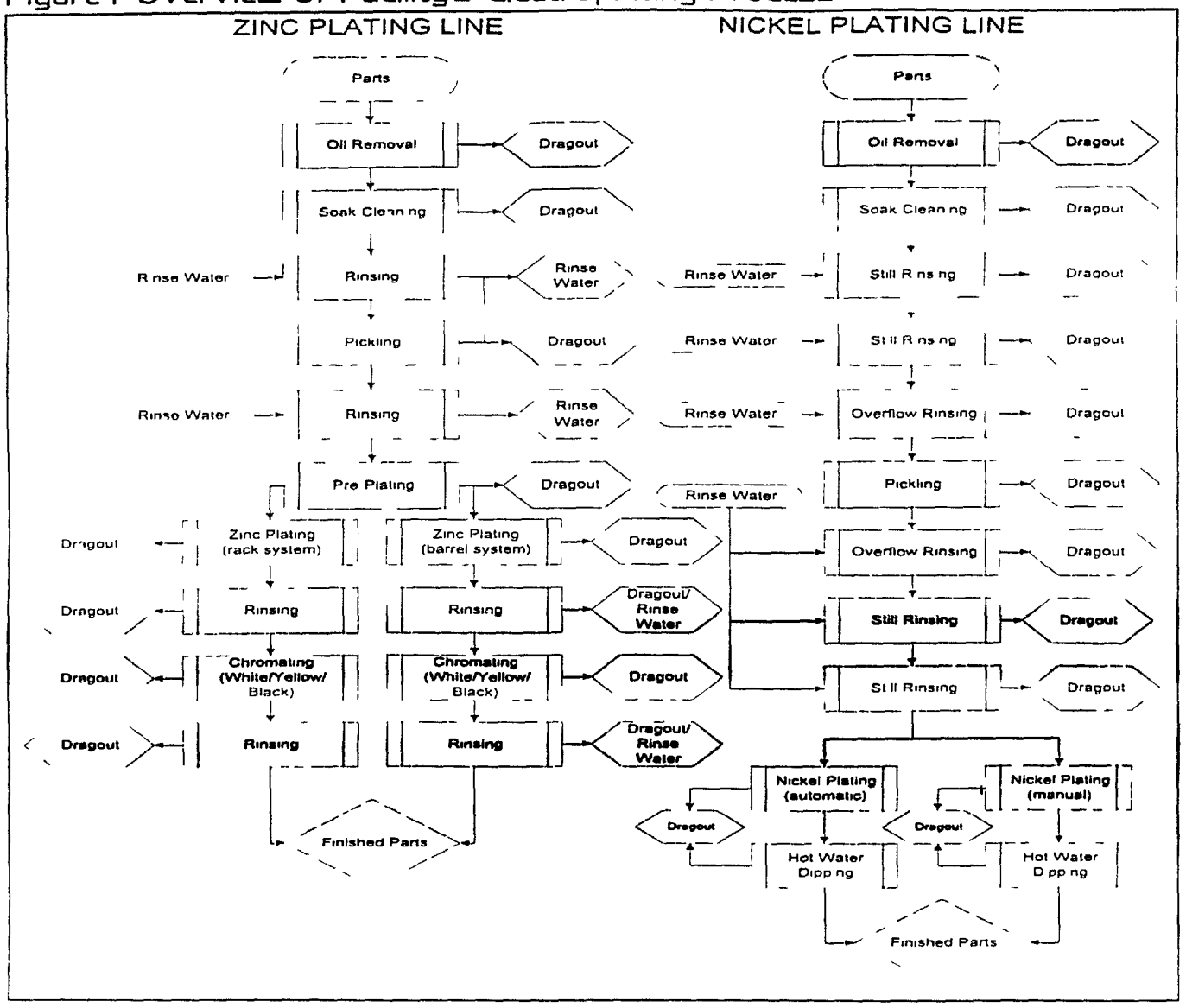

are colored through the use of chromate passivation solutions Three different solutions are used white yellow and black

In the nickel/chrome line both automatic and manual rack plating are used Parts are plated first with nickel and then with hexavalent chrome for increased water resistance and hardness

Environmental Problems

This facility has several water and air pollution problems, and uses both materials and energy inefficiently The wastewater treatment system does not neutralize all of the harmful contaminants before they are discharged into a nearby stream Contaminated fluids enter the wastewater stream via dragout dropping onto the floor and bus panel chromating which is done directly on the floor Fumes and steam are emitted from a number of baths, especially the heated soak cleaning degreasing electrocleaning, and plating baths There is a tremendous amount of wasted chemicals along both lines as well as a high number of rejects and scrap material Energy is used inefficiently because of low production rates

Pollution Prevention Opportunities

Of the 20 pollution prevention opportunities identified 11 involve the zinc plating line 5 involve the nickel plating line and 4 involve the waste management system for nickel plating Ten opportunities have been classified as high priority Because of space considerations, only these top-priority opportunities are outlined here and in Table 1, which details the environmental benefits associated with these opportunities, and the projected implementation costs and savings

Zinc Plating Line

Dragout Minimization Currently, parts housed on racks and in barrels are not properly drained before being moved from one tank to another Chemicals

HB1-91 027 01 Pub 11/30/95

EPP

Environmental Pollution Prevention Project

CASE STUDY

Pollution Prevention Assessment for a Metal Finishing Plant

Executive Summary

A pollution prevention diagnostic assessment was conducted at a metal finishing plant. The objectives of this assessment were to: 1) identify pollution prevention options that would reduce the quantity of toxics, raw materials and energy used in the manufacturing process and thereby reduce industrial pollution and worker exposure to toxic chemicals, 2) demonstrate the environmental and economic value of a comprehensive pollution prevention assessment, and 3) improve manufacturing competitiveness and product quality for this facility. The assessment team consisted of a U.S. electroplating expert, a U.S. toxicologist, a local consultant, and a local engineer.

Based on observations of operations and activities in the plant and discussions with the plant's technical director and the manager of the plant's electroplating operations, the team identified eight pollution prevention opportunities. More than one implementation option exists for several of the opportunities. For a one time investment of between US$6,000-$16,000 (depending upon the option or options chosen) the facility could save between $29,700 and $38,600 annually. In many cases, savings are contingent upon implementation of other options.

Because the overall facility operations are environmentally sound, much of the savings can be accrued through simple and inexpensive changes, such as increased monitoring and training (only two of the options require a capital outlay of over $100). In return, these recommendations will reduce reject rates and process solution loss and environmental problems associated with solvent use.

Facility Background

The facility produces chrome plated door knobs and other zamak-cast hardware for use in homes and automobiles. Plant operations include smelting, polishing, cleaning, electroplating, and assembly. The plant employs 105 permanent workers and 35 temporary workers. The firm uses three shifts to operate its die casting and plating operations 24-hours a day, 5 days per week. The plant is extremely clean, well ventilated, and efficiently laid out to handle the number of different operations that take place in a fairly compact space.

Manufacturing Process

The facility's operations include five basic processes: die casting, polishing, cleaning, electroplating, and assembly (refer to Figure 1).

The die casting process utilizes an alloy called "zamak" consisting of zinc (96%), aluminum (4%), and trace amounts of copper and magnesium. The zamak is melted and then cast into parts using one of four die casting machines. Cast parts are produced on a frame. These frames, also made from zamak, are separated from the parts and recycled back into the casting machines. Parts removed from the frames are inspected and trimmed, and defective parts are returned to the casting machine.

Manual polishing of handles, plates, doorknobs, and other fixtures takes place in a separate room. The workers use electric polishing machines and polish handles and use a red polishing paste to apply

335

Figure 1 Overview of Facility's Metal Finishing Process

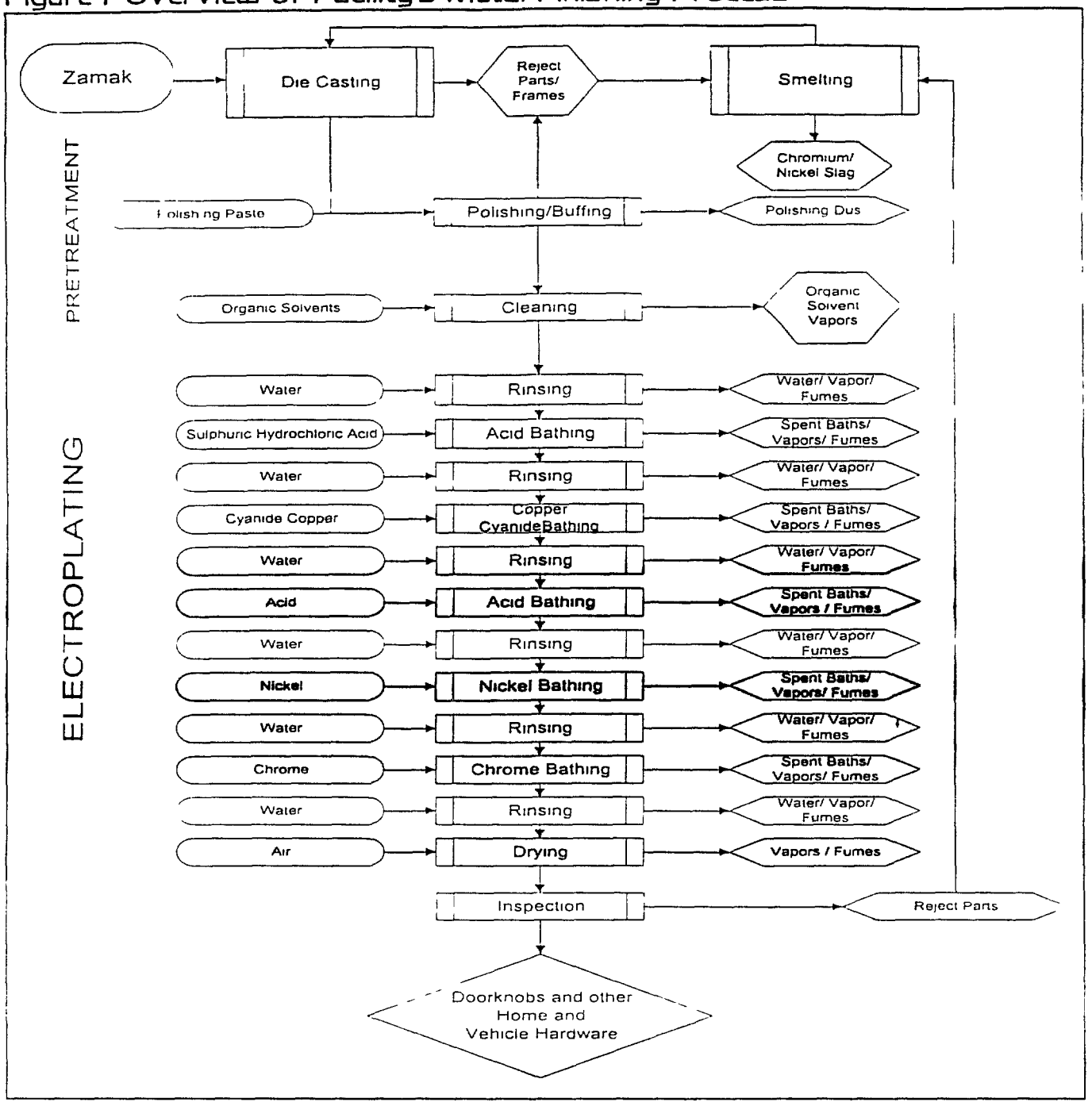

abrasives to the wheel The paste comes in brick form and consists of aluminum and silica oxides and fatty acids to bind these materials The plant also operates an automatic polishing machine which is used for door knobs This machine uses a different type of polishing paste than that used for manual polishing Dust from both the manual and automatic polishing processes is collected using vacuums connected to each machine The vacuum system is very effective and there is no dust evident in the polishing room Workers in this area inspect parts and send any defective parts back to the die casting operation where they are mixed with raw zamak and fed into the casting machines

Prior to electroplating, many parts are cleaned in a vapor degreaser that uses trichloroethylene (TCE) to remove grease and other impurities The tank is positioned across the main work room from the plating line in a well ventilated area Parts are dipped and dried there, placed on racks, and transported over to the line for further cleaning and plating

The electroplating line consists of 17 tanks 3 washing tanks, 9 rinsing tanks, a copper cyanide bath, a nickel bath, and a chrome bath The line is fully automated with two hoists that move part racks along the line according to programmed instructions All plating baths are in good condition There is no evidence of

Table 1 Summary of Recommended Pollution Prevention Opportunities

Operation	Pollution Prevention Option	Implementation Cost (US$)	Financial Benefits (US$)	Payback Period
Polishing Option #1	Reduce time between buffing and cleaning	None	Unknown (savings in costs of degreasing)	N/A
Polishing Option #2	Replace polishing compound with one that is compatible with aqueous alkaline cleaner	Material and labor cost should be equal to present cost	Unknown (savings in costs of degreasing)	N/A
Polishing Option #3	Improve operator practice using new fixtures and jigs and increased training	Unknown (depends on design and applicability)	$2 520 $5 040 per year	Less than 6 months
Solvent Degreasing	Replace this process with aqueous alkaline cleaner	$5 000 $15 000 (first time purchase of new alkaline cleaner)	$8 267 per year overall quality improvement	6 18 months
Alkaline Cleaning Acid Dip Cyanide Copper Nickel Electroplating	Improve process bath monitoring	Less than $400 total	$3 271 per year and reduced reject rates	Immediate
Nickel Electroplating	**Reduce frequency of** purification	**Already incurred in other options**	**$5 875-$12,244 (value of lost** process solution)	**Immediate**
Chrome Electroplating Option #1	**Capture and return 100% of** dragout to process solution	**None**	**Reduced need for treatment**	**N/A**
Chrome Electroplating Option #2	**Improve process solution** monitoring and control use porous pot	$500 $1 000 for the porous pot	Reduced reject rates	1 2 years
Rinsing	Add agitation and sprays	Less than $100	$9 720 (value of wasted water) reduced reject rates	Less than 3 months
Total	–	$6 000 $16 000	$29 700 $38 600	

corrosion and the area around the tanks is dry and reasonably clean Several tanks have strips between them to maximize the amount of dragout that is returned to the baths The hoist generally stays in place for several seconds after lifting a rack from a bath before moving to the next tank to allow time for the dragout to drip back into the tank Loss from dragout appears to be minimal

Following plating parts are inspected once more and defective parts are categorized according to the type of defect they exhibit Certain parts are returned to the smelter and melted down while other parts are polished to raise their quality to acceptable levels

Environmental Problems

The plant is very modern and precautions have been taken to address the problems typically associated with the metal finishings industry The only air pollution evident is solvent evaporation after degreasing Water is wasted during the rinsing process Energy is wasted during some inefficient processes

Pollution Prevention Opportunities

Table 1 lists the pollution prevention opportunities identified by this assessment the environmental benefits associated with these opportunities and projected implementation costs and savings

Polishing/Buffing The standard polishing and buffing operation involves removing excess zamak by grinding or cutting and then smoothing the surface by polishing and buffing As the prevalence and size of unremoved deposits attests the current practice achieves sub-optimal results Reducing these polishing/buffing residues can reduce material use and labor improve surface finish eliminate the need for degreasing in organic solvents and eliminate the need for cyanide in alkaline degreasing and cleaning solutions Three options are available The total cost of implementing these options is minimal savings can be $2 520 $5 010

Option #1 Replace polishing compound with one that is compatible with aqueous alkaline cleaners

Option #2 Reduce time between buffing and cleaning If left too long the polishing compound's constituents may evaporate, leaving behind a hardened metallic soap that is difficult to remove

Option #3 **Improve operator practice by using new fixtures and jigs, and increased training Current** buffing techniques are difficult to control within current buffing pressures and motor capacities **New jigs and fixtures will simplify the process Combined** with an operator training program, this can reduce compound and wheel use, as optimal settings can be determined For a minimal cost up to 10-20% of these materials can be saved annually

Solvent Degreasing About 20% of the production volume is passed through the degreaser after polishing buffing but before it is racked for plating These parts are subjected to organic solvents which have been known to damage the ozone layer and cause cancer To rectify this problem the firm should replace these solvents with an aqueous alkaline cleaner thereby eliminating these hazards The one-time cost of doing so is between $5,000 $15 000 with an annual savings of $8,267 and an overall quality improvement

Improved Bath Process Control The firm should increase bath monitoring and control of the alkaline cleaner acid dip copper cyanide bath and nickel electroplating baths Currently, all are linked with waste generation and rejects With improved process solution and monitoring all three processes can be more efficient at a cost of less than $100 for each for either titration test kits Savings include reduced rejects and $3 271 per year in reduced bath change frequency

Nickel Electroplating Taken together all of the options mentioned in this assessment have the potential of reducing the need for full-bath purification of the nickel electroplating process from once every 2 months to once per year At no cost (costs are [illegible] elsewhere) an annual savings of $5 875 $12 244 can be achieved

Chrome The primary release to the environment from this process solution is through the rinsing of plated parts Two non-flowing rinses are already used after this process solution and that practice is already capable of capturing 80-90% of the dragout

Option #1 **All of the dragout can be captured by adding another non-flowing rinse with a spray to the production line This can be done at no cost** and will reduce the need for chrome treatment

Option #2 **Improved process solution monitoring and control can also improve the process by reducing reject rates This could possibly include the purchase of a** 'porous pot' purification system for use in the continuous removal of metallic ion contamination The one time cost of this pot is $500-1000

Rinsing Currently the facility uses excessive amounts of water because operators are never certain when a rinse tank will be needed and therefore do not want to risk rinsing in dirty water Some fairly simple changes can be made that will reduce the amount of water used by 67% thereby saving $9,720 annually Agitating the solution creating a "rolling boil" of water can be especially effective at rinsing packed parts In addition spray rinses can be installed, which are very effective at rinsing racked parts with very low pressures The total cost of implementing these measures is under $100

For Further Information

For further information on this assessment or other activities sponsored by EP3, call the EP3 Clearinghouse at (703) 351-4004 send a fax to (703) 351-6166, or on Internet ep3clear@habaco com

Table I Summary of Recommended Pollution Prevention Opportunities

Unit Operation	Pollution Prevention Action and Environmental/ Product Quality Benefit	Cost (US$)	Financial Benefit	Payback Period
Polishing Option #1	Reduce time between buffing and cleaning	$0	Savings in costs of degreasing	N/A
Polishing -- Option #2	Replace polishing compound with one compatible with aqueous alkaline cleaners	$0	Savings in costs of degreasing	N/A
Polishing Option #3	Improve operator performance by purchasing fixtures and jigs provide training	Undetermined	Savings in costs of degreasing	N/A
Polishing Option #4	Reduce compound and wheel use through proper operator practice	$0	$150 $300 per year	Immediate
Solvent degreasing	Replace this process step with aqueous alkaline cleaner	$5 000	$11 134 per year	< 6 months
Alkaline cleaning Option #1	Eliminate cyanide use in cleaning	$0	$895 per year	Immediate
Alkaline cleaning -- Option #2	**Improved process control and solution monitoring**	**< $100**	**$930**	**Immediate**
Acid Dip 10% sulfuric	Isolate acids for steel and brass	$0	Quality improvement	N/A
Acid Dip -- 10% sulfuric	**Improved process control and solution monitoring**	**$0**	**$144**	**Immediate**
Acid Dip -- Depassivation of nickel	**Eliminate this process step cleaner is adequate**	**$0**	**$672**	**Immediate**
Acid Dip Mixed acid stripper	Replace with solutions in smaller tanks practice segregation and recovery	Undetermined	Reduced treatment	N/A
Copper cyanide	Improved process control and solution monitoring	< $100	Quality improvement	N/A
Cyanide brass electroplating	Improved process control and solution monitoring	< $100	Quality improvement	N/A
Nickel electroplating Option #1	Improved process control and solution monitoring	< $100	Quality improvement reduced solution loss	N/A
Nickel electroplating Option #2	Less frequent purification	Already incurred in other options	$4 130 to $5 875 per year	Immediate
Chrome electroplating Option #1	Capture and return 100% of dragout to the process solution	$0	Reduced need for treatment	N/A
Chrome electroplating Option #2	Improved process control and solution monitoring porous pot	$500 to $1 000	Could eliminate need to invest in treatment	1 2 years
Rinsing -- Effectiveness	Add agitation and sprays control water use reduce water use	< $100	$1 728 per year	< 3 months
TOTALS		$5 500 to $6 500	At least $19 783 per year	

Existing Pollution Problems

At the time of the assessment, there were a number of pollution problems including (1) polishing debris, (2) the use of organic solvents for degreasing, (3) acid dip contamination, (4) inefficient cyanide electroplating, (5) unnecessary chrome and nickel waste, and (6) excessive water use

Pollution Prevention Opportunities

The assessment identified 18 pollution prevention opportunities that could address the problems identified above, with significant environmental and economic benefits to the facility Table 1 lists the recommended opportunities for the facility, and presents the environmental benefits and implementation costs for each

Polishing Debris As currently performed the polishing process leaves considerable debris (consisting of a mixture of polishing compound and solids from the polishing wheel) inside the pieces These deposits cannot be removed by scraping or wiping

To alleviate this problem, the facility can take several steps Reducing the amount of polishing compounds used will reduce the amount of debris Removing visible residue will allow less debris to harden on the pieces Reducing the time between buffing and cleaning will also allow less debris to harden on the pieces Lastly, employing a polishing compound that is compatible with alkaline cleansers will improve the efficiency of the cleaning process (along with recommendations outlined in the next section)

Degreasing The facility currently employs the chlorinated solvent TCE to degrease parts TCE is highly toxic and chemically reactive, and has been linked to liver cancer and ozone depletion Parts can be cleaned equally well or better through the use of aqueous alkaline cleaners Thus the facility can greatly reduce its environmental impact *and* improve product quality by implementing an alkaline cleaning system Further the alkaline system is more cost effective than the TCE system A US$5 000 investment will yield savings (from eliminated solvent purchases) of US$12,000 per year

Acid Dips In this facility's plating process, an acid dip (usually 10 percent sulfuric acid) is used to remove any oxides that may have developed on the brass or steel surface With time, copper and organic contamination accumulates in the acid bath If more than 300 mg/l of copper is present in the acid dip, the bath can cause adhesion problems for the steel substrate Further, copper contamination also impacts the nickel electroplating solution While the facility utilizes nickel depassivation to remove the copper contamination it is not efficient wasting nickel brightener and energy

Separate acid dips for steel and brass substrates will improve the quality of both the steel substrate cleaning and the nickel electroplating solution and hence reduce the number of rejects the facility produces Additionally by employing tighter process control over the acid dips the facility will save US$816 a year in reduced solution cost

Inefficient Cyanide Electroplating Cyanide electroplating cannot be eliminated at this facility because the known non-cyanide alkaline alternatives do not function well in this application However, improved process control and solution monitoring could enhance product quality, and hence reduce the number of rejects the facility produces

Unnecessary Nickel and Chrome Waste. Currently, the facility purifies the nickel bath six times per year By improving process control and purifying the nickel bath only once per year, the facility should save between US$4,100 and US$5,900 a year from recovered nickel solution

The lost chrome solution is only valued at US$180 per year However, if 100 percent of this chrome could be captured the facility would not have to install expensive chrome waste treatment required by the facility's government A porous pot purification system (priced between US$500 and US$1,000) is capable of removing the chromium from the waste water While the expected costs of meeting chromium discharge limits have not been determined they are sure to be greater than the cost of the purification system

Excessive Water Use. Waste water is generated in significant volumes from the facility's rinse steps Some fairly simple changes can be made that will reduce water use by 25 percent The use of air or solution agitation would increase the efficiency of the rinses and reduce the frequency of changes Spray rinses would also be more efficient than the current practice Lastly water inputs should be installed with switches that turn off the inputs after a set period of inactivity For an investment of less than US$100, the facility should save US$1,728 a year from reduced water usage

For Further Information

For futher information on this assessment or other activities sponsored by EP3, call the EP3 Clearinghouse at (703) 351-4004, send a fax to (703) 351-6166, or on Internet ep3clear@habaco com

Table I Summary of Recommended Pollution Prevention Opportunities

Operation	Pollution Prevention Option	Environmental and Health Benefits	Implementation Cost (US$)	Financial Benefits (US$)	Payback Period
Zinc Plating Line	Dragout Minimization	Savings on chemical requirements reduced wastewater loads	$5[illegible] for horizontal bars and [illegible]	$310/year	[illegible]
Zinc Plating Line	Spray Rinsing	Savings on chemical requirements	$780 for spray nozzles, hose reels, hoses, piping, and fittings	$5,200/year	[illegible] month
Zinc Plating Line	Bath Analysis	[illegible]	[illegible]	[illegible]	[illegible]
Zinc Plating Line	Demineralizer	Savings on chemical [illegible] and reduced [illegible] costs	$1[illegible] for [illegible]	[illegible]	[illegible]
Zinc Plating Line	Recover solution from bus panel chromating	Savings on white chromating usage, reduced wastewater load	$110 for [illegible]	$[illegible]/year	[illegible]
Zinc Plating Line	Area Modernization	Increased productivity, savings on chemical usage, reducing wastewater load and rejection rate	Dependent upon basic design [illegible]	Dependent upon [illegible]	[illegible]
Nickel Plating Line	Dragout Minimization	Savings on chemical requirements, reduced wastewater load	$560 for horizontal bars and fittings	$1,[illegible]00/year	[illegible] week
Nickel Plating Line	Bath Analysis	Savings on chemical requirements	$[illegible]0/year for increased operations and management costs	$1,100/year	N/A
Nickel Plating Line	**Retainment of Still Rinses**	**Savings on chemical make up, reduced wastewater load**	**0**	**$2,700/year**	**N/A**
Waste Management System	**Recover Material from Sludge**	Recovering expensive metals, reduced wastewater load, and reduced landfilling		$1,000	N/A
Total from High Priority Opportunities	--	--	**$3,320 in one-time costs and $640 annual cost**	**$1,000 in one-time costs and $48,570 annually**	--
Total from Low Priority Opportunities (not in Table)	--	--	**$6,740 in one time costs**	**$44,930 annually and increased production**	
Total	--	--	$10,060 in one time costs and $640 annual costs	$1,000 in one time costs and $93,500 annually	

such as plating solutions, soak, and electrocleaners drain onto the shop floor or into rinse baths, and are lost. By increasing drainage time from 5 to 10 seconds, dragout can be reduced by 40 to 50%, while production rates remain unaffected. This can be achieved by installing horizontal bars above the baths on which the racks can be hung to drain. At a cost of $45 for each of the 12 baths, the total one time cost is $540. Chemical savings from this practice can amount to $310 annually, for a payback time of 20 months.

Spray Rinsing Installation. In addition to increasing drainage time, rinsing the parts with water will rinse contaminants off the parts before they proceed to the next bath. This can be directly above the process bath or, if this causes too much dilution, above an empty tank. The total one-time cost of installing spray rinses (nozzles, reels, and hoses) for the 10 baths is $770. If this process were to cut chemical requirements by 2%, annual benefits would amount to $5,200.

Chemical Bath Analysis Frequency. Currently, complete process bath analysis is done only once per month. As analysis and control of the composition of each bath is very important in order to maximize product quality and bath lifetimes, it is recommended that these analyses be conducted at least every week. This will ensure that the need for specific chemicals is identified before there is a serious problem with plating. The total cost of these analyses is $310 annually. By enhancing bath lifetimes and reducing reject rates, this step can save the plant up to $13,900 per year.

Demineralizer Installation. The lifetimes of many process baths are shorter than they need to be. One reason is that the plant's tap water has a high content of iron and other minerals, as well as suspended solids, which results in the buildup of impurities. The use of demineralized water will reduce impurities found in the process sludge and lengthen process bath lifetimes. The one-time cost of installing demineralizing equipment is estimated to be $1,300. Savings derived from improved chemical composition and reduced rejection rates can amount to $4,550 annually.

Recover Solution from Bus Panel Chromating Because there are no tanks large enough bus panels are currently chromated on the floor Solution runs off the surface of the bus panel onto the floor and eventually into the wastewater conveyance system To address this problem, a tank needs to be specially modified for bus panel chromating Such a tank would have a drain that will keep runoff from entering the wastewater conveyance system but which will also collect the runoff for reuse The one-time cost of tank modification is approximately $110 Annual savings can be up to $90 creating a payback period of 15 months

Modernize Zinc Plating Area Currently facility management is planning to replace the existing manual barrel zinc plating equipment with an automated system This presents an excellent opportunity to simultaneously undertake auxiliary operations modernization in order to emphasize dragout volume minimization, dragout recovery, water use minimization, bath quality/integrity maintenance, and process control automation Such actions would create improvements to the cleaning chromating surface preparation, stripping, and rinsing activities While the one-time implementation costs will not be trivial, they are largely dependent on the scenario chosen Annual savings will correspond to the program implemented and will include reduced rejection rates chemical purchase reductions through increased in process recovery and reuse of valuable chemicals, and reduced wastewater and sludge management cost

Nickel Plating Line

Dragout Minimization The problems associated with this process are the same as in the zinc plating line By increasing drainage time by 7 seconds dragout can be dramatically reduced, without affecting production rates This can be achieved by installing horizontal bars above the baths on which the racks can be hung to drain At a cost of $45 over 6 baths the total one time cost is $270 Chemical savings from this practice amount to $12 200 annually for a payback time of one week

Chemical Bath Analysis Frequency The problems associated with this process, and the recommended pollution prevention procedures are the same as in the zinc plating line Total cost of increased chemical analyses is $320 per year By enhancing bath lifetimes and reducing reject rates this procedure can save the plant up to $11 200 annually

Avoid Dumping of Still Rinses Still rinses are often discarded even though they contain valuable chemicals It is recommended that whenever possible still rinses are used as part of the process bath No significant costs are associated with this option and there is a net annual chemical savings worth approximately $27 00

Waste Management System

Although waste treatment is not the focus of the assessment process some critical concerns are presented that will help reduce waste generation from the treatment area Since the company is now planning to construct such a facility, there is an immediate need to thoroughly quantify the volume and constituents of the facility s wastewater

Recover Metals from Waste Treatment System Sludges at the Nickel Plant It is necessary to remove sludge that has accumulated in the wastewater treatment tanks It is recommended that, prior to landfill, the facility attempts to extract metals from the sludge With a 10% recovery rate, earnings of up to $960 can be achieved Landfilling rates are approximately $260 and with recovery it is possible to realize a profit on this process

Lower Priority Recommendations

For the zinc plating line recommendations include cleaning electrical contacts daily filtering the soak cleaner replacing plastic buckets installing separate pickling tanks for separate operations and using float balls on process baths to reduce evaporative losses For the nickel plating line, these include cleaning electrical contacts daily and converting hexavalent chrome plating to a trivalent process For the waste management system of the nickel/chrome facility recommendations include recovering metal from spent cyanide stripping solution improving wastewater neutralization efficiency and improving the efficiency of hexavalent chromium reduction in wastewaters Total one-time costs from these options is $6 470 Cumulative annual financial benefit is estimated at $46,000

For Further Information

For further information on this assessment or other activities sponsored by EP3, call the EP3 Clearinghouse at (703) 351-4004, send a fax to (703) 351-6166 or on Internet ep3clear@habaco com