PN-ACC-326 ~~356~~
97226

BURNS AND ROE ENTERPRISES, INC.

Audit Report
SIMFEROPOL POWER PLANT
UKRAINE

FINAL

August 1997

Submitted by:	**Burns and Roe Enterprises, Inc.**
Submitted to:	**U.S. Agency for International Development**
Contract No.:	**CCN-0002-Q-00-3154-00** **Energy Efficiency and Market Reform Project** **Delivery Order No. 6, Task 2** **Power Plants Combustion Efficiency**

A

W O 5906-02

Delivery Order No 6
Energy Efficiency and Reliability - Ukraine
Task 2 - Power Plants Combustion Efficiency

Final Audit Report
Simferopol Power Plant

August 1997

Prepared by. John E Hallberg, P.E.
Alexander Filippov (Kiev)
Burns and Roe Enterprises, Inc
800 Kinderkamack Road
Oradell, NJ

Prepared for: U.S. Agency for International Development
Washington, D C. 20523-1415

Burns and Roe Enterprises, Inc.
1400 K Street, NW, Suite 1050, Washington, D C 20005
Telephone (202) 408-6831 Facsimile (202) 408-6835

h

COMBUSTION EFFICIENCY AUDIT REPORT
UKRAINIAN POWER PLANTS
SIMFEROPOL POWER PLANT

TABLE OF CONTENTS

		Page
1.0	EXECUTIVE SUMMARY	1
1.1	Introduction	1
1.2	Principal Findings	1
1.3	Recommendations	2
2.0	BACKGROUND	3
2.1	Objectives of Energy Saving Program	3
2.2	Purpose of the Audit	4
3.0	DESCRIPTION OF POWER PLANT	4
3.1	General Description	4
3.2	Boiler Plant	4
3.3	Mazut Supply	5
3.4	Gas Supply	5
3.5	Boiler Efficiency Calculations	5
3.6	Process Control System	5
3.7	Environmental Issues	5
3.8	Future Plans	6
3.9	Inspection, Assessment, Comments	6
4.0	DESCRIPTION OF AUDIT ACTIVITIES	6
4.1	Specific Audit Activities	6
4.1.1	Scope and Methodology	6
4.1.2	General	7
4.1.3	Boiler Efficiency	7
4.1 4	Boiler Plant	8

TABLE OF CONTENTS (CONTINUED)

4 1 5 Boiler Controls
4 1 6 Boiler Back End Including Stack
4 2 General Audit Activities
4.2.1 Scope and Methodology
4 2.2 Power Plant Audits

5 0 FINDINGS AND RECOMMENDATIONS

5.1 Low-Cost, No-Cost Short Term Opportunities
5 2 Medium and Long-Term Opportunities
5 3 Replicating and Expanding the Program to Other Power Plants

6 0 IMPLEMENTATION PHASE (Follow-up Visit)

6 1 Introduction
6 2 Results and Benefits
6 3 Conclusions

APPENDICES

Appendix A-1

Energy Conservation Opportunities (ECO's)

Appendix A-2

Vendor Information

Appendix B

Audit Records

Appendix C

Power Plant Data

Appendix D

List of Contacts Made During Plant Audits

Appendix E

Abbreviations and Units Conversions

Appendix F

Letter of Receipt for Equipment
Energy Audit

Appendix G

References

1 Plant Audit Visits Trip Report, October 1994
2 Preliminary Audit Report, December 1994
3 Plant Audit Visits Trip Report, Team #2, March 1995
4 Follow-up Audit Trip Report, July-August 1997

1.0 EXECUTIVE SUMMARY

1.1 Introduction

The audit team of John Hallberg and Prem Gupta spent four days, February 26 through March 1, 1995 at the Simferopol power plant, located in Simferopol city. They performed the following energy audit as representatives of Burns and Roe Enterprises, Inc of Oradell, New Jersey.

The Simferopol power plant is presently 100% government owned, but is in the process of reorganization for privatization with the governments change to a free market economy. The plant consists of three 160 T/Hr. steam boilers supplying steam to two 50 MW turbines; two 100 GCal hot water boilers; two 150 MW gas turbines. All boilers use natural gas with mazut as an emergency back-up.

1.2 Principal Findings

Several Energy Conservation Opportunities (ECO's) for the power plant were identified for short term low cost measures and for longer term higher cost measures for large energy savings. The low cost measures include instrumentation for measuring fuel consumption and heating values and for controlling combustion efficiency which would result in simple payback periods as short as six months. Larger cost long term measures include major combustion control system upgrades, including interlocks and flame safeguard systems, coal, ash and laboratory instruments, and would result in payback periods of about one to three years.

Rehabilitation and reconstruction studies have been completed on this power plant to evaluate the options: (1) life extension of existing units, (2) complete replacement with new power plant, or (3) a mix of life extension presently being done with addition of new units. The objectives are to be able to minimize NO_x formation and increase boiler efficiency and reliability. A proposed ABB combined cycle power plant was cancelled due to lack of funds.

1.3 Recommendations

Boiler efficiency can be improved, emissions reduced and the life expectancy of the Simferopol power plant extended based on the recommendations listed in the following Table. The Table summarizes several energy conservation opportunities which will pay for themselves within short periods of time.

An investment of $80,000 in boiler efficiency improvements (ECO-03, 04, 05) will result in an annual savings of $194,000, which corresponds to 2,927,200 Nm^3 of natural gas and 364 tonnes of mazut. An additional investment of $25,000 in energy conservation programs (ECO-01, 02) may result in an annual savings up to $61,000 which corresponds to 920,400 Nm^3 of natural gas and 114 tonnes of mazut.

Many other opportunities exist within the power plant for energy savings which could be the subject of further audits and actions by the plant staff. The energy conservation opportunities also have applications in other power plants.

It is recommended to purchase one additional Enerac combustion analyzer for Krimenergo to use in their other three power plants.

Summary of Energy Conservation Opportunities (ECOs)

ECO#	Description	Annual Savings in US$ (1995 Prices)	Project Cost in US$ (1995 Prices)	Simple Payback
				Current Energy Prices
01	Energy Conservation Management Program	$51,000	$25,000 Note 1	< 1 year
02	Energy Conservation Training Program	$10,000	Note 1	< 1 year
03	In-Situ Oxygen Analyzer One Unit - 2 Probes	$11,000	$29,000	2.6 Years
04	Mazut Sonic Flow Meters (4 Req'd)	Included with ECO-03	$16,000	Included with ECO-03
05	On-Line gas calorimeter	$183,000	$35,000	2.3 Mo.

NOTE 1: See Section 5

2.0 BACKGROUND

Twelve newly independent states (NIS) emerged from the collapse of the former Soviet Union in 1991. USAID is addressing and managing assistance to these countries through the newly formed Bureau for Europe and the New Independent States (USAID/ENI).

Funding activities in the energy sector supports the cost of technical assistance, training, and limited capital assistance in support of energy-related equipment and cooperation with local institutions.

Ukraine, with a population of 52 million, is considered one of the most energy intensive states. Initial assistance has shown that there are many opportunities to reduce energy consumption and to reduce environmental degradation. The breakup of the Soviet Union has resulted in the cut-off of supplies and spare parts required by the Ukrainian Energy Suppliers, which threatens the reliability of major power plants. This situation is compounded by lack of hard currency exchange to pay for needed supplies and fuels.

Most of the thermal power plants are coal fired units that are co-fired with mazut and natural gas, complimented by natural gas and mazut fired units in populated areas. These units often supply hot water to district heating and steam for industrial use. Electricity and district heating supplies are threatened because Ukraine is unable to pay for imported oil and gas at prices approaching world fuel prices.

2.1 Objectives of Energy Saving Program

USAID/Kiev has implemented an expanded energy program in Ukraine to enhance the reliability of power generation and reduce dependency on imported oil and gas and improve energy productivity.

The purpose of these efforts will be to provide services and, where appropriate, U.S. and local products, directed toward improving energy and operating efficiencies in power generation, and in the equipment and controls required to use energy efficiently and cost-effectively.

The purpose of the work is to improve boiler efficiency at seven power plants and/or combined power and district heating plants which have been selected by USAID/Kiev in consultation with the Ministry of Energy and Electrification. These plants are fired with natural gas, fuel oil or coal. The objectives are to (1) foster improved management of boiler/ plant operations by identifying and implementing immediately cost-effective "low cost - no cost" efficiency improvements; (2) provide equipment support to implement low-cost operations, improve monitoring and energy management; (3) provide operation training.

2.2 Purpose of the Audit

The purpose of the audit was to:

- Assess overall technical and management capabilities, plant energy efficiency, and capital investment decision-making processes for each plant; assess plant procedures for identifying and executing energy saving investments requiring management changes, and capital investment.

- Identify short-term no-cost/low-cost efficiency measures with savings potential and paybacks.

- Provide preliminary identification of longer term energy conservation opportunities (ECO's) requiring larger capital investment.

3.0 DESCRIPTION OF POWER PLANT

3.1 General Description

ENERGO SYSTEM:	KRIMEAENERGO
LOCATION:	CITY OF SIMFEROPOL
INSTALLED CAPACITY:	TWO - 50 MW TURBINE GENERATORS 3 - 160 T/H POWER BOILERS 2 - 100 GCAL HOT WATER BOILERS 2 - 150 MW (105 MW NET GAS TURBINES)
COMMISSIONED:	1958
FUEL:	GAS, MAZUT OR GAS AND MAZUT
DISTRICT HEATING	SUPPLY HOT WATER HEATING FOR CITY OF SIMFEROPOL

For a more detailed description of the following items, see References in Appendix G.

3.2 Boiler Plant

The Simferopol power plant was commissioned in 1958 burning anthracite coal in three-160 T/H BKZ - 110 ATM, 540°C boilers supplying steam to two - 50 MW VK-50 CHP turbines Original plans were to add four more 50 MW units. In 1996 natural gas was found in northern Crimea and in 1968 to 1976 the boilers were converted to burn only natural gas and mazut. The steam turbines were rebuilt and converted to condensing units and two new 100 GCal hot water boilers burning gas and mazut were built.

In 1986 two 150 MW (105 MW net), two stage simple cycle gas turbines from Leningrad

Electrosila Works were commissioned. The turbines burn No. 2 fuel oil with natural gas as backup. One gas turbine is used as a peaker and the other turbine shaft is disconnected and the generator is used as a synchronous condenser (40 MVAR) for power factor correction.

3.3 Mazut Supply

Mazut is sampled from one railroad tanker car at delivery and from the pipelines feeding boilers. The amount of mazut fired for the total power station is determined by measuring the level of the mazut storage tanks once per shift.

3.4 Gas Supply

Natural gas in the plant supply pipeline is at a pressure of about 1.7 bar and is automatically regulated to a pressure of 0.5 bar by either of two parallel control valves. Total plant inlet flow is measured by an orifice plate and differential pressure instrument, and flow and pressure are continuously recorded. Each of the three 110 bar boilers also has an orifice plate and differential pressure type flow instrument, and so the mass flowrate of natural gas to each of these boilers can be determined. Each burner on each boiler is provided with an orifice plate and manometer flowmeter so that gas flowrate can be balanced among these.

3.5 Boiler Efficiency Calculations

Previously, the performance calculations were done routinely based on algorithms, curves, and tables developed by the plant designers. More sophisticated calculations, such as boiler efficiency by the heat loss method or turbine cycle efficiency were carried out entirely by means of manual calculations.

3.6 Process Control System

The main boilers are balanced draft furnaces and air flow is regulated by dampers on the FD and ID fans. The dampers have remote manual control from the main control panels and absolute pressure transmitters provide an indication of furnace pressure. Existing flue gas oxygen analyzers are either not in service or are known to provide inaccurate readings, and air flow control is based upon guesswork.

As at the main boilers, combustion control of hot water peaker boilers excess air control is based on guesswork. Furnaces have absolute pressure indicators, but not transmitters, and so it is necessary to manually adjust the FD and ID fan dampers. The dampers do, however, have electric positioners.

Each of the five boilers has a mazut feed and a mazut return orifice plate and flow transmitter as well as electrically positioned mazut flow control valves.

3.7 Environmental Issues

The plant has to pay fines for emissions of NO_x, SO_2 and vanadium. They also have to pay discharge fee for plant waste water.

3.8 Future Plans

The building for two additional 100 GCal boilers has been erected, but the boilers planned for startup in 1994 are not built in the Ukraine, and there is no money to pay for them.

The Chief Engineer of Krimenergo, Alexander P. Oparko discussed a broad range of subjects regarding the plans and projects for energy development in Crimea. He placed major emphasis on the recent Crimea Presidential Decree for development of alternative energy technologies, which Crimea, has a rich potential. As a result of the extensive drilling program over the past ten years exploring for gas and oil, geothermal resources have been discovered which could provide up to 40% of Crimea heating needs (see attached meeting notes). He is very much interested in US experience in geothermal technology and would like to develop greater U.S. cooperation in engineering, development and equipment. He also would like to learn more about other mature U.S. alternate technologies such as refuse burning, wind power, energy storage and solar.

3.9 Inspection, Assessment, Comments

- The station is well managed by experienced personnel. The engineering staff is competent.
- Chemical Department staff is competent. There is a need for proper analytical equipment to perform to higher standards in a short time.
- The cycling mode of station operation affects the equipment and results in considerable plant refurbishment and replacement.
- The power station considers control systems to be obsolete, i.e., all equipment was designed in the 1950's. The power station is proud of the fact that they are able to operate these old units.
- Power plant is taking measures aimed at effective utilization of fuel (see Appendix C for description).

4.0 DESCRIPTION OF AUDIT ACTIVITIES

The audit activities included the collection of information and data from various reference sources and individuals working within the power plant. The activities are of two types: one for specific combustion efficiency audit measurements and calculations, and the other for information of a general natural regarding other energy conservation measures

4.1 Specific Audit Activities

4.1.1 Scope and Methodology

Individual systems and/or equipment were identified for data collection and analysis and were selected based on several criteria, including:

- Quantity of energy used within the system.
- Potential for energy efficiency improvements.
- Significance of system/component to the power plant.
- Potential for replication.

The selection of systems and equipment to audit were made after meeting with power plant specialists to discuss energy conservation priorities and a walk through the power plant. In preparation for the audit activities at the power plant, technical energy monitoring equipment was purchased in the United States, shipped to Kiev and delivered to the power plant. The equipment was purchased to monitor and to make measurements of various systems that were likely to be encountered within the power plant. The measurements enabled auditors to learn specific information about the systems being investigated. Based on the measurements, the auditors calculated boiler efficiency and potential energy improvements that could be gained by installing energy efficiency equipment. Economic paybacks were calculated and the priority of items established according to the shortest payback. Based on estimated cost of equipment and money available, recommendations were then made as to whether to implement the items studied.

The main components of the equipment are:

- Portable Enerac 2000 combustion analyzer
- Portable computer and printer
- Fluke power analyzer
- "Heat Spy" Infrared temperature detector/indicator

Of this equipment, the most significant was the Portable Enerac 2000 Combustion Analyzer which showed a potential immediate fuel savings by tuning the boilers to reduce excess combustion air and increase boiler efficiency.

The majority of the equipment was used extensively by the audit team and as a training tool for the plant personnel. Typically, the audit team would separate during the day, with each member responsible for data collection, etc. Each member would usually be accompanied by three to six specialists, for the purpose of observing and answering questions, etc.

4.1.2 General

The Simferopol plant was selected by USAID/KIEV in consultation with the Ministry of Energy and Electrification. The Ministry also identified the management of the facility as receptive to this type of program and felt that the maximum benefit could be gained by working at Simferopol.

4.1.3 Boiler Efficiency

The specific plant audit consisted primarily of on-line flue gas emission measurements using Enerac 2000 portable combustion analyzer, laptop computer and printer. Measurements were made on Boiler #1 burning natural gas.

The Enerac 2000 portable combustion analyzer is an instrument which has chemical cells to

measure oxygen, carbon monoxide, sulfur dioxide, oxides of nitrogen content and combustible gases. The unit also has a type K thermocouple incorporated in the probe to measure the temperature of the gas at the extraction point. The fuel analysis of 15 various typical fuels are contained in the memory of the portable analyzer. Also, custom fuel analysis can be programmed using a laptop computer. **Enerac 2000 portable combustion analyzer calculates, displays and prints boiler efficiency, excess air, CO_2 and emissions.**

Due to the high in-leakage rates in the furnace, the economizer and the air heater, an on-line calculation of the combustion efficiency by Enerac 2000 portable combustion analyzer proved to be not feasible. The efficiency calculated is actually overall boiler efficiency as shown on the printout. Direct measurements of O_2, CO, combustible gases, NO_x and SO_2 appeared to be accurate. Any improvement in the efficiency of the Simferopol power plant must come primarily from an improvement in overall efficiency of its boilers. Simferopol power plant is efficient due to a significant thermal load. A copy of the Enerac 2000 portable analzyer print-outs can be seen in Appendix B.

For a detailed description of the Audit activities see the trip report in Appendix G.

Burns and Roe engineers estimated an incremental improvement in boiler efficiency achievable due to a reduction in excess air fed to the boilers. Using a portable combustion analyzer, 5-8% excess furnace oxygen was measured at full load while firing natural gas. CO emissions were negligible in all tests. Based on calculations, the excess furnace oxygen at full load while firing gas can be reduced by 1.35%, resulting in an incremental improvement in boiler efficiency of at least 0.36%.

In future the Simferopol power plant operators should be able to manually adjust the air supply to determine what magnitude of reduction in excess air could be achieved within constrains imposed by CO emissions, smoke, and flame stability. Therefore, it is recommended that permanent instruments be installed to measure the O_2 and CO content of the flue gas and thus assist the operators in avoiding unsafe conditions while continually minimizing excess air.

4.1.4 Boiler Plant

Tests were taken at right and left side of No. 1 steam power boiler near the extraction points for existing oxygen analyzer. The two extraction pipes connect to a common shunt pipe to the I.D. fan suction. A single extractive type paramagnetic oxygen analyzer pulls a sample below the intersection of the two pipes. The Enerac 2000 portable combustion analyzer indicated the same concentration as the existing analyzer, which was calibrated in January 1995, and is installed on the newest boiler. A second set of tests were taken at the I.D. fan inlet.

Flue gas samples were also taken from a hot water boiler No. 2 which was operating full load on natural gas. These boilers burn only mazut during winter when natural gas is curtailed to supply domestic use. A good sampling point could not be found before the convection backpass, so samples were taken from a sample point ahead of the I.D. fans. The sample pipe was too small to insert the Enerac probe to get stack temperature, therefore, the efficiency numbers are not valid. A hose was used to connect the probe to the sample pipe. Four tests, two before and two after reducing excess air show some improved results. Carbon monoxide can be reduced by further tuning of burner registers and fan dampers to improve turbulence in the furnace.

4.1.5 Boiler Controls

The boilers have no burner management system and all interlocks are of a very basic design offering limited protection. Most control functions are single loop manual control from the main control board. The controls and instruments are obsolete, readings are unstable and require ongoing maintenance to keep operational. Spare parts are difficult to obtain.

4.1.6 Boiler Back End Including Stack

The three BKZ-160-100 FB steam power boilers each have two stages of tubular heaters in a divided backpass, with two induced draft (I.D.) fans discharging to one of the three flues in a common stack.

4.2 General Audit Activities

Information was gathered from existing sources, plant historical operating data and discussions with key personnel. Actual audit activities consisted of taking operating data and test measurements wherever possible and performing analysis based on this data and historical information.

4.2.1 Scope and Methodology

General audit activities included discussions about the entire power plant. Individuals responsible for various tasks within the power plant organization were interviewed to obtain information and data on energy consumption, prices and performance. They were questioned what organizational changes and controls have been implemented to manage energy conservation and efficiency. In addition, the Chief Engineer was requested to provide a description of what recent measures had been taken for improvement of operational efficiency and effective fuel utilization.

4.2.2 Power Plant Audits

The audit activities associated with the total power plant consisted primarily of a review of the various available publications and brochures produced by the various agencies and by the Ministry of Power and Electrification as well as from drawings and diagrams provided by the engineers at the power plant. Much information and insight was also gained through the interviews related to the system specific audits at all levels. Many of the personnel employed in the power plant have had experience in areas other than the one in which they currently work, and this was useful as background material

5.0 FINDINGS AND RECOMMENDATIONS

5.1 Low-Cost, No-Cost Short Term Opportunities

ECO-01 ENERGY MANAGEMENT CONSERVATION PROGRAM

The chief engineer is responsible for energy conservation and efficiency improvements at the Simferopol power plant in addition to his other duties. Because of the shortage of hard currency to pay for imported fuel all of the management is highly motivated to find ways to improve operating efficiencies in order to achieve effective fuel utilization, and all employees are aware of the need for conservation. However, the existing program must be expanded and enhanced with management restructuring and new procedures to prepare for the coming privatization reforms. These changes will help to prepare the plant to be commercially oriented by incorporating western management methods and procedures.

The stated goals for this program, as a minimum, should be emphasized as follows:

- Conserve energy
- Reduce environmental pollution
- Improve operational efficiency
- Improve equipment reliability
- Introduce new technologies

The stated purpose for an expanded energy management program should be to provide a basis for attracting private financing and future investments for a viable enterprise having the potential for success.

As a first step, a highly visible management staff position and/or department should be established reporting to the director and having the responsibility and authority to develop, implement and monitor energy conservation, training, reliability and rehabilitation programs The primary tasks will be coordination, communication, and information. The energy manager should be responsible for knowing about, reviewing and consolidating the findings and recommendations of the numerous studies and reports prepared by consultants and Institutes for the USAID, World Bank, EBRD, EC, Ministries, etc., so as to minimize duplication of work and maximize exchange of information and expertise.

In addition, the energy manager should coordinate and monitor the progress and success of conservation measures implemented by the power plant staff and employees.

In 1994 the Simferopol power plant consumed the following quantities of fuel·

		1994 Prices		1995 World Prices
Gas 153,836,000 Nm^3	($17.27/1000$Nm^3$)	$2,656,748	($50/1000 Nm^3	$ 7,691,800
Mazut 19,112 tonnes	($117/tonne)	$2,236,104	($131/tonne)	$ 2,503,672
		$4,892,852		$10,195,472

If only a modest savings of about 0.5 percent of this fuel expenditure is saved in the first year, $52,000 of expenditures can be justified for measures to improve fuel utilization and efficiency, improve reliability and reduce maintenance.

Some funds should be provided for consulting services to assist the Simferopol power plant management with training and materials to establish this program under ECO-01 and ECO-02.

ECO-02 ENERGY CONSERVATION TRAINING PROGRAM

Many sources of energy waste and loss may seem very obvious and simplistic, and the power plant engineers and specialists are well aware of the cumulative magnitude of these losses. However, the staff needs, and should encourage, much more support from all employees in the identification and elimination of many sources of energy loss. Many of the sources of waste may not be known or understood by many of the employees, and this is where the results of a formal training program can have significant energy conservation paybacks. The auditors were informed that the employees already know all about energy conservation. However, it is the auditors observations and measurement results as well as the observations and measurements of other studies which indicate that there are many low cost, no cost opportunities for energy savings, and this is the point of recommending a low cost, no cost energy conservation training program for all employees. Establish procedures, classes, more posters, incentives, rewards, competition, etc. and utilize the expertise of the engineers and specialists to reinforce the importance of energy savings. If only one tenth of one percent of the annual fuel budget can be saved in the first year, $10,000 can be provided for training materials

ECO-03 IN-SITU O_2 ANALYZERS

The boiler efficiency improvements can be accomplished by replacing or supplementing the existing extractive oxygen analyzers with in-place zirconium oxide sensor analyzers of the type used in the United States. It is difficult to obtain a representative sample by using an extractive type analyzer. Also, the instrument can become fouled with acid sludge formed from moisture condensation and soot. United States practice typically places an oxygen sensing probe into the flue gas duct. This technology could be applied to the boilers at Simferopol power plant.

It is recommended to install in-situ zirconium oxide oxygen probes on at least one unit, two required. For detailed calculation of payback savings, see Appendix A-1.

ECO-04 MAZUT SONIC FLOW METERS

The audit team learned through interviews with station personnel that one area which has hampered the stations progress in energy improvements is the inability to accurately measure the decrease in fuel consumption due to any changes in operation or equipment motivated by efficiency improvement. This is because the existing fuel flow instruments in place at the station are inaccurate or don't work. If only modest gains in efficiency could be realized due to the incentive provided by the ability to more accurately evaluate such improvements, such flow monitoring equipment could pay for itself in a very short period.

Line sizes and design information were obtained for specifying sonic flow meters for two supply

and two return mazut lines serving the boilers.

ECO-05 ON-LINE NATURAL GAS CALORIMETER

The most important concern and priority at Simferopol was the urgent need for analytical instruments for monitoring fuel quality (mazut, gas). The data indicates that the plants are paying large sums of money for fuel energy content (heating value) which they do not receive Instruments for measuring the fuel heat value in Kcal/Kg and other parameters would provide the documentation necessary for making claims against suppliers.

They urgently need an on-line gas calorimeter to verify the heat content supplied by Gasprom. Their laboratory calorimeter is not commercial (certified), the tests are not continuous so they cannot make a claim for credits. We were given test results for monthly averages for 1994, as well as gas consumption. The plant claims losses of about 8.705 x 10^{10} BTU/Year which results in $183,000 loss per year. Although this loss of expensive gas fuel heating value has nothing directly to do with "combustion" efficiency, this is also a priority in reducing the large sums of hard currency they must pay for fuel gas. For detailed calculation of payback savings, see Appendix A-1.

5.2 Medium and Long Term Opportunities

COMBUSTION IMPROVEMENT PROGRAM

This is a longer range energy conservation program requiring larger investments of capital which will accomplish larger fuel savings, improvements in efficiency and reliability and life extension of the boilers.

- Improve burner design and combustion air flow configuration and temperature profiles.
- Repair boiler air leaks.
- Develop new procedures for startup and shutdown cycling based on results of metallurgical testing for creep and fatigue life.
- Upgrade instrumentation for load control, fuel control, combustion air and boiler pressure control.
- Repair and/or replace (asbestos) insulation on boilers.

There are other studies which have been done or are being done, and it is recommended that the results and recommendations be coordinated to prevent overlap or conflicting tasks.

MEASURES FOR IMPROVEMENT OF RELIABILITY

Additional equipment items which were requested by the chief engineer and his specialists which are urgently needed for maintaining reliability of the boilers and power plant are listed below:

	DESCRIPTION	COST
1.	Oil Analyzer (laboratory) used for detecting organics breakthrough from makeup water treatment carbon filters before demineralizers. Hydrocarbon contamination of demineralizer resins can cause irreparable damage and reduction of capacity required for boiler feedwater makeup. (2 x $8000)	$16,000
2.	Gas Leak detectors needed for testing for leaks of natural gas from piping valves and equipment and hydrogen leaks at generators (2 x $600)	$1,200
3.	Condenser Tube leak detectors Loss of condenser vacuum and increased turbine backpressure results in loss of thousands of dollars of fuel and power every year. A helium leak detectors can be used by Krimenergo on ten condensers at the four power plants.	$12,000
4.	Conductivity and pH Meter (laboratory) used for testing water quality of water treatment, feedwater and condensate systems.	$1,200
5.	Dissolved Oxygen Probes (feedwater) a specific ion oxygen probe analyzer is needed for continuous monitoring for control of dissolved oxygen in feedwater from deaerators to boilers. Range 0-5 ppb (2 x $3,500)	$7,000
6.	Oxygen Analyzer (laboratory) is a lower cost alternate to online monitoring, a modern portable oxygen analyzer can be used manually to obtain faster and more accurate readings than present.	$2,500
7.	Silica Analyzer necessary for measuring demineralizer performance and quality of water being fed to boilers. Silica in steam going to turbines will cause serious damage to blades.	$9,000
8.	Vanadium Test Kit the metal vanadium is present in fuel oil burned in gas turbines and can cause damage to blading if not treated. Also, vanadium is considered to be toxic, and presents a personnel and environmental hazard in emission concentrations and quantities are calculated based on percent concentration in fuel oil and rate of burning.	$600
9.	Level Gauges for Four Mazut Tanks Important for measuring deliveries and consumption of fuel.	$10,000

Note: $1995 US equipment/instrument prices.

5.3 Replicating and Expanding the Program to Other Power Plants

An economic benefit can be derived from extending the demonstration program to other

Ukrainian Power Plants. From Burns and Roe experience the Ukrainian Power Plants, when firing gas and mazut, exhibit the following typical characteristics:

- Ukrainian power plants operate in a steady-state mode (base load),with a turbine maintaining throttle pressure, "fixed" firing rate, and manually adjusted air flow (fixed settings for each load)

- Very high in-leakage rates (up to 100%) are typical, which make readings of any oxygen analyzer dependent on its location (distance from the furnace). They also make impossible on-line calculation of the combustion efficiency at the back end of the boiler. What is calculated by the Enerac is boiler efficiency.

- Most of the oxygen analyzers are of the extractive/paramagnetic type, with questionable accuracy and a measurement time constant on the order of about 1-2 minutes. As a result, they cannot be used for real time excess air control.

- Low carbon monoxide levels (10 to 100 ppm) in the flue gas in combination with 4 to 5% oxygen in locations with 850-870 Degree Centigrade temperature leads us to believe that combustion efficiency of the Ukrainian Power Plants can be improved. In our estimation, the improvement will be on the order of 0 5% to 1%.

The conclusions are as follows:

- Excess air can be reduced until less than 100-150 ppm of carbon monoxide is generated which is indicative of efficient gas combustion.

- Considerable economic benefit can be realized by reducing the excess oxygen by 1-1.25% and achieve 0.5% improvement in combustion efficiency even with existing manual control of the combustion process. It is important that constant operator attention is maintained. Such attention can be obtained by way of operator incentives based on the fuel savings. Another alternative would be to invest in expensive automatic control for the excess air system.

- Savings can be achieved more easily with carbon monoxide measurements of the undiluted flue gas at different boiler loads.

- Improvements in boiler efficiencies and reductions in fuel consumption can be further demonstrated by replicating and expanding the portable combustion analyzer program*to other Ukrainian power plants

6.0 IMPLEMENTATION PHASE (Follow-up Visit)

Burns and Roe engineers conducted follow-up visits and training during July 22 - August 16 in Ukraine in accordance with the Delivery Order objectives The following report describes the activities of John E Hallberg, P E and Alexander Filippov who visited Simferopol on Monday and Tuesday, July 28-29, 1997

6.1 Introduction

WORK PLAN

For the power plant

1 Review the steps taken by the plant for implementation of recommendations and assist in completion
2 Provide additional training and assistance on installation and use of the equipment
3 Refine and finalize the audit report and the recommendations for short and long term actions based on follow-up discussions with power plant personnel and minor additional audit work, if necessary
4 Measure actual energy savings based on audit recommendations and equipment installation, if measurements are not possible, estimate and provide the rationale of the method that is used for estimation

PERSONS MET DURING MEETINGS:

Anatoliy K Voronovskiy - Chairman of the Board, Director, Krimenergo
Alexander Chuprinko - Director of Simferopol Power Plant
Vladimir Cherkosov - Chief Engineer
Vasily V Kurinnoy - Worked at all seven power plants
Valery Babichev - Chief of Technical Department (computer expert)
Alexander Dubinets - Chief of Electrical Works
Valery Duzhenko - Chief of Electrical Laboratory
Sergey Kojevnikov - Chief of Boiler and Turbine Works
Alexander Litvinov - Chief of Automatic and Measuring Equipment Department

INSTRUMENTS SUPPLIED TO SIMPEROPOL CHP PLANT

Zirtek oxygen analyzers (2) probes for one boiler, one two-channel analyzer
Panametrics two channel ultrasonic transit time flow meter
Panametrics one channel ultrasonic transit time flow meter
Instromet natural gas chromatograph, display control unit and accessories
Oxygen cell and consumables for Enerac

During February - March of 1995, the plant was provided with an Enerac combustion analyzer, a laptop computer and printer, an infrared thermometer and a Fluke power analyzer

6.2 Results and Benefits

Enerac Combustion Analyzer

They do not have a program diskette for the Enerac S N 11003252 They used to buy reference gases to calibrate instruments in plant, but now calibrate the Enerac and use it to check other instruments But they cannot use it to plot and analyze data on the printer as described in the manual, and wonder if there is special software to make it work We were given a document showing calculation of efficiency and energy savings of about $34,000 during 1995 using the Enerac We were also given a document from the Central Crimean Regional Department of Environmental Protection regarding a dispute in comparison of inspector using coloremetric burettes to test flue gas vs Enerac readings always being lower and a requirement to do parallel tests with the Donorgres Laboratory "TESTO-33" instrument.

Fluke Power Harmonics Analyzer

The Electrical Department has been using the Fluke power analyzer extensively to measure current, voltage and phase angles with very good results They measure voltage on busses, current on current transformers

The accuracy of the Fluke is higher than measuring equipment in the plant for measuring voltage and current. They trust the instrument very much and use it to check other measuring instruments. When testing phases on a group of transformers at the gas turbines, they found an unbalance They could perform maintenance on the scheme, but the cost would be higher than the energy losses

They used the Fluke to try to find the weak points in boiler feedwater pump motors and identified that stator winding need to be replaced They also discovered that copper rotor bars end connections were weakening, resulting in losses The problem is that these are old 3 KV motors no longer made, as 6 KV is standard

They also found a small 200W unbalance of about 20% at administration building where one phase was overloaded and they corrected it The important lesson is that the Fluke is useful for identifying energy losses

Infrared Thermometer

The infrared thermometer Minolta Cyclops is used to check for heat losses from boilers, drum insulation, steam lines, etc They found bad insulation on a stream drum and replaced it They tried to check the accuracy of instrument against a thermocouple and found 40°C difference They do not trust the accuracy, but said they do not have a manual in Russian or table of emissivities We mentioned that the Mikrom manual was translated and should be similar

They used the instrument to find a steam leak under insulation in the main building They were starting a boiler, 370°C, 40 kg/cm^2 and saw there was a problem, valve was steaming, not normal They measured insulation temperature difference near the valve and found a 10 cm crack on weld of 325 x 24 mm pipe

Instromet Encal Gas Chromatograph

We went to the power plant control room to look at the Instromet Encal gas chromatograph (GC) display mounted in the main panel Above it is mounted a data logger which can input real time heat content from the GC to record total from metered gas flow At present, they input a fixed value of KCal/cu m

We then went to the gas metering substation to see the GC installation They ran new shielded cable about 3000 ft from GC to control room display control unit They took a sample line from downstream of orifice meter run to control house where GC is mounted on the wall They added a filter in the sample line with silica gel dissicant for removing moisture and crude from gas sample All tubing and wiring is installed, waiting for calibration gases to clear customs in Kiev, so the startup engineer can travel to commission the GC Their biggest concern is the need for a spare electronics display board Attached is a diagram of the system

Zirtek Boiler Oxygen Analyzers

We went to look at the installation of oxygen analyzers on one of the two large hot water heating boilers. The electronic two-channel analyzer display unit was mounted in the boiler control panel They mounted the probes below the observation ports on backpass of the boilers They made up an extra pair of flange-nozzles and installed them in the second boiler so the probes could be switched to that boiler when operating

They mounted the reference air control panel between the two boilers with cable and copper air tubing run to both They found a very small air blower-compressor salvaged from an old hydrogen analyzer, which they mounted inside the cabinet

Panametrics Ultrasonic Flow Meters

Valery Babiehev - Chief of Technical Department is trying to develop a computerized information system for the plant and would like to combine the data from all instruments into one program He has written a program in C-language for downloading data from the Panametrics He asked where is the program from Panametrics for downloading data to a computer They use the flow meter every day for measuring hot water flow and mazut flow to boilers

17

6.3 Conclusions

We were provided with a table of consumption, heating values and prices for natural gas and mazut for 1996-1997, attached In-plant cost to produce electricity is 5 3 Kp/KWh (2 91¢/KWh), and Kremenergo sells at 7.11 Kp/KWh (3 91¢/KWh)

The technicians at Simferopol plant were most innovative and creative and took the initiative to find solutions to solve problems encountered during installation of the USAID supplied equipment.

fb

7/29/97

Simferopol Power Plant

Mazut and Natural Gas Consumption:

1996: Total
Gas 123,336,000 Nm^3
Mazut 9891 tons

Heat Content (Average): Gas 7969 Kcal/Nm^3
$83/1000 M^3 Mazut 8767 Kcal/Nm^3

Elec = 5.3 Kopecks/KWH Cost, 7.11 Kopecks/KWH Krimenergo Sells

Month 1996	X1000 Nm^3 Gas			Mazut	
	Consumption	Measured Calories	Contract Calories	Consumption	Price/ton
Jan	13456		7924	279 tons	USD 194
Feb	13203		7879	634 (8660 Kcal)	197
Mar	10472	7858/8076	8796	3063	197
Apr	7258			912	197
May	6806			---	
June	7161	8435	8410	---	
July	9891	8651	8778	246	200
Aug	13478	8736	8875	---	
Sept	8447	8667	8930	1193 (9208 Kcal)	180
Oct	4580	8444	8835	2717	170
Nov	11263	7862	8135	142 (8602 Kcal)	180
Dec	17321	7841	7986	327 (8800 Kcal)	180

Simferopol Power Plant

Mazut and Natural Gas Consumption:

Month 1997	X1000 Nm^3 Gas			Mazut	
	Consumption	Measured Calories	Contract Calories	Consumption	Price/ton
Jan	18812	7886	8097	---	185
Feb	17551	7841	7967	301	185
Mar	18526	8092		138	190
Apr	14817	7879		598	190
May	12531	8343		25	190
Jun	12674	8246		---	190

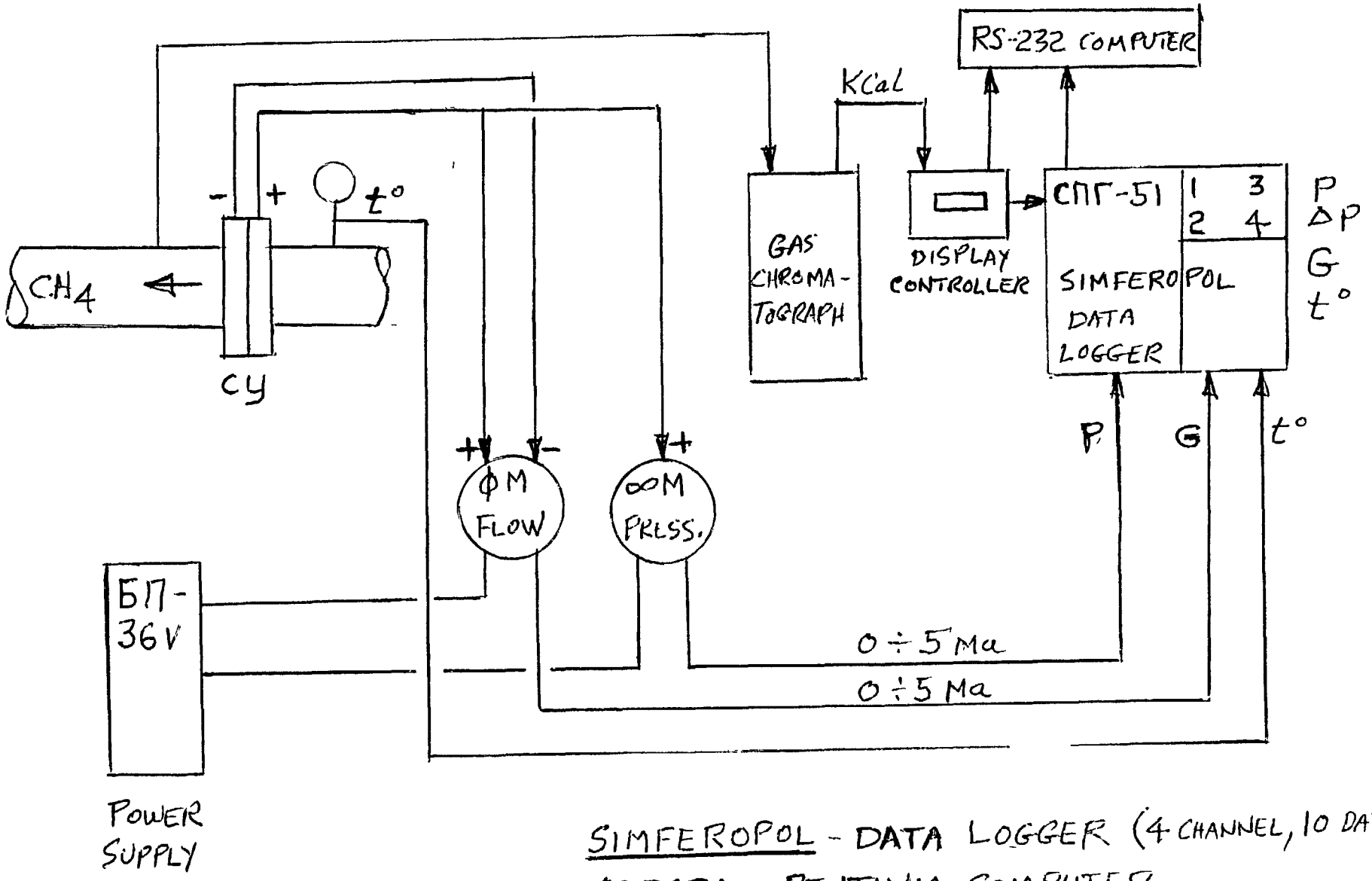

SIMFEROPOL - DATA LOGGER (4 CHANNEL, 10 DAY MEMORY

ODESSA - PENTIUM COMPUTER

State Committee of the Autonomous Crimean Republic for the Environment and Natural Resources Protection
The Central Crimean Regional Department for Nature Protection

March 12-25 1997

"Krymenergo" GAEK
Ministry for Power Engineering of Ukraine
74, Kievskaya Str.
Account 221902 in "Pzominvest Bank" kRB
MFO 324430, OKPO 00131400

Statement of Checking How the Legislation on Water Protected Facilities is Observed

I, the State Inspector at the Central Crimean Regional Natural Protection Office, Ms. I.P Shcherbakova, in the presence of the representatives from "Krymenergo" GAEK - Engineer of the Industrial & Technical Department, Ms O. Yu Valia-Yeva, Senior Engineer from Simferopol HPP, Ms. V.N. Cherkassova, have carried out checking how the legislation on the water protected facilities is observed at the Heat Power Plant named after V.I. Lenin, the latter being an independent structural unit within "Krymenergo" GAEK (the provisions on the structural unit of December 1, 1995). The checking has been performed on the ground of the Law of Ukraine "on the natural environment protection". The checking resulted in finding out the following:

In 1996, at Simferopol HPP, there was produced:

- Power energy - 294,713 MW - h
- Heat energy - 350,976 Gcal
- Reactive energy - 72,724.8 MVar

Between January and February in 1997, there was produced:

- Power energy - 57,557 MW - h
- Heat energy - 132,276 Gcal

The consumption of fuel in 1996 was

- Natural gas - 123,336 thousand m^3
- mazut - 9,891 ton

at the average sulfur content of 1.7%

22

In January 1997, there was consumed

- of the natural gas - 18,812 thousand m^3 at the lowest fuel combustion heat Q = 7,800 KCal/m^3

- of mazut - 0 ton

At the moment of the inspection, there are in operation:

- two power boilers - BKZ-160-100FB
- one water heating boiler KVGM-100
- a steam turbine T-34155-90
- a generator at No 3 in the synchronous compensater mode

The gas and turbine plants do not function due to the absence of the fuel

The enterprise was given the developed and approved standards of MAE levels valid until January 1, 1998 Until the same date, there is valid the permission to release the harmful substances into the atmosphere in the amount of 3,893.086 ton/yr (887.286 g/s)

According to the report - 2TP-air in 1996, the exhausts amounted to 761.610 t/yr, including there·

- the mazut ash - 4.930 ton/yr;
- sulfur anhydride - 354.930 ton/yr;
- nitrogen dioxide - 401.760 ton/yr

The others include - the mazut ash (4.920 ton/yr).

The standards concerning the maximum admitted exhausts by each boiler when working on mazut set the exhausts of the mazut ash in recalculation on the vanadium pentaoxide The quantity of the given substance is determined by calculation, but in Chapter 2 of the Report 2TP-air is not specified for the given substance.

According to an agreement with DONORGRES, there is fulfilled each quarter inventory of the exhausts sources given by each boiler with submitting a statement on the efficiency and the exhausts into the atmosphere due to the data from the reports and the instrumental measurements in 1996 the CO_2 content in the flue gases is absent.

At the HPP there are monthly calculated exhausts of the harmful substances with taking into account the values of the sulfur content of the fuel determined by the laboratory of the enterprise, and the same is done concerning its lowest combustion heat.

The standards concerning the maximum admitted exhausts by each boiler when working on mazut set the exhausts of the mazut ash in recalculation of the Vanadium Pentoxide. The quantity of the given substance is determined by calculation, but in Chapter 2 of the Report 2TP-air is not specified for the given substance.

According to an agreement with DONORGRES, there is fulfilled each quarter inventory of the exhausts sources given by each boiler with submitting a statement on the efficiency and the exhausts into the atmosphere. Due to the data from the reports and the instrument measurements in 1996, the CO_2 content in the flue gases is absent.

At the HPP, there are monthly calculated exhausts of the harmful substances and taking into account the values of the sulfur content of the fuel determined by the laboratory of the enterprise, and the same is done concerning its lowest combustion heat.

However, there are no records kept in the register books of the exhausts into the atmosphere, nor is kept the register for the exhausts measurements (the forms of the registers were recommended due to "Instructions for organizing control of the exhausts at a HPP" - RD.34.02.306-88). Enerac-2000 was not used by the laboratory of the HPP during 1996 due to the resource of the oxygen analyzer to be over.

On March 18, 1997, the laboratory of the State Committee for the Natural Resources and Environment, p20 - function together with the laboratory of the HPP performed parallel taking samples from the operated boiler systems. The laboratory of the State Committee used the national production instrument - "Inspector - 1 - Express-Method", the Laboratory of the HPP used "Enerac-2000.

The comparison of the results shows discrepancy between the values concerning the exhausts. For example, when the steam boilers BKZ-160-FB on No. 1 are being operated, the analytical control instrument registers absence of CO in the fuel gas exhausts (Enerac-2000); the express-method "Inspector" determines their presence on the level of 62.5 mg/m, that is within the process requirements and corresponds to the approved maximum admitted exhausts levels.

Analysis for the Boiler BKZ-160-100FB at No. 3 was not performed by the laboratory of the State Natural Protection Committee due to the mismatching the sample-taking holes.

In the exhausts of the water heating boiler KVGM-100 at No. 1, measurements with both the instruments show presence of CO; the values determined by the laboratory of the State Committee is higher in this case too than those determined by the HPP

The values for the nitrogen oxide exhausts are practically the same, except for the exhausts from BKZ-160-100FB at No. 1; the reading from Enerac-2000 is 102.5 mg/m^3, the reading from "Inspector" is 150 mg/m^3. The results of the checking measurements are attached.

24

As the method of "Inspector 1" is a test-method, it is suggested to carry out two parallel measurements by Enerac-2000 and using the instruments "TESTO-33" from the laboratory of DONORGRES. The results shall be in written form submitted to the inspection.

Concerning formation and arrangement of the wastes, there has been found as follows:

According to the data from the HPP, the territory is made up of three areas with the total area of 26.88 HC:

- 1 - 23.18 he - the industrial area
- 2 - 3.09 he - the ash-dumping area
- 3 - 0.6 he - an area in the collective orchards zone

In the limits on arrangement of the wastes issued by the State Committee for the Natural Protection valid for 1997, there were not set the wastes resulting from draining the sewage waters at the ash-dumping area.

The construction and installation works office "Krymenergostroi" has not submitted the act on setting the borders of the area in the nature.

State Inspector / Signature / I.P. Shcherbakeva

Persons present at the time of the inspection:

Engineer of "Krymenergo" GAEK O. Yu Valiayeva
Chief Engineer of Simferopol HPP V.N. Cherkesov

On the ground of the above said, there is suggested:

1. To make an additional checking of the exhausts of the harmful substances into the atmosphere.

2. To keep records in the register for exhausts and in the register for measurements of the exhausts into the atmosphere - The grounds for that - "Instructions for organization of the control over the exhausts at the HPP" - RD.36.02.306-88.

25

OXYGEN PROBES IN HOT WATER BOILER NO. 1

PROBE FLANGES IN HOT WATER BOILER NO. 2
ZIREK BOILER OXYGEN ANALYZER

SIMFEROPOL

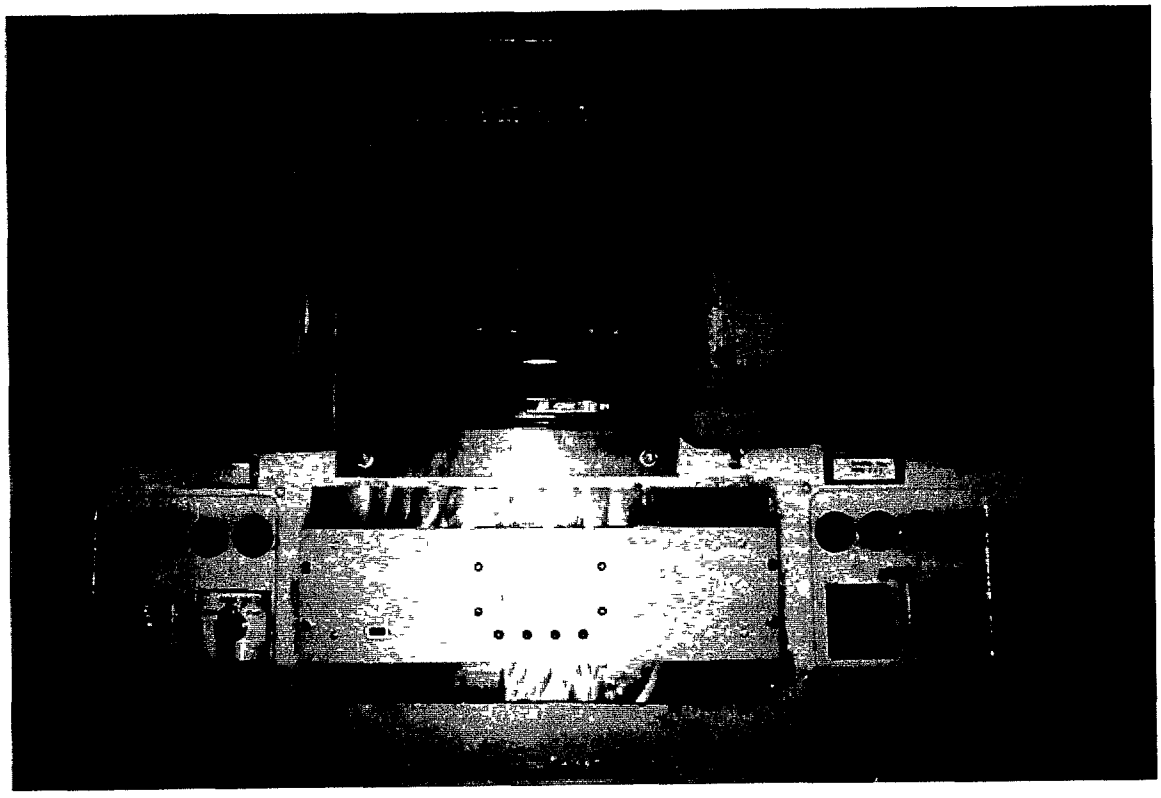

GC CONTROLLER DISPLAY & DATA LOGGER

GAS CHRONATOGRAPH IN CONTROL HOUSE

SIMFEROPOL

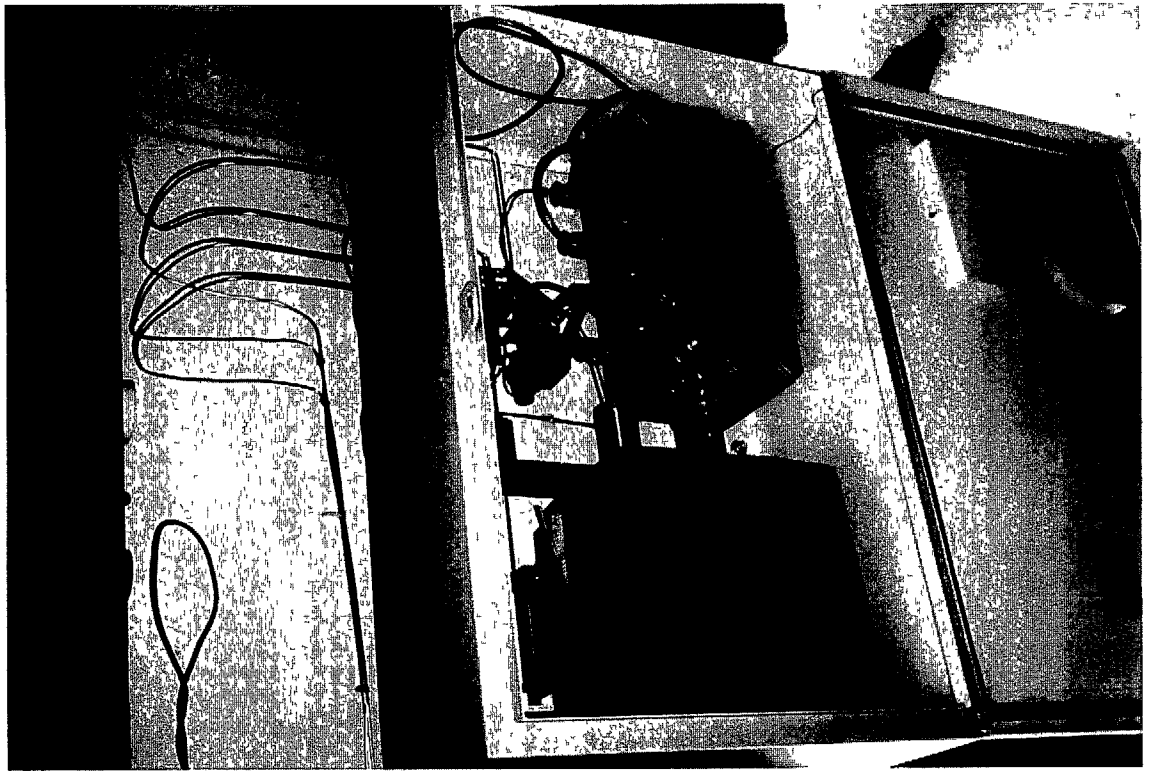

GAS CHROMATOGRAPH INSTALLED

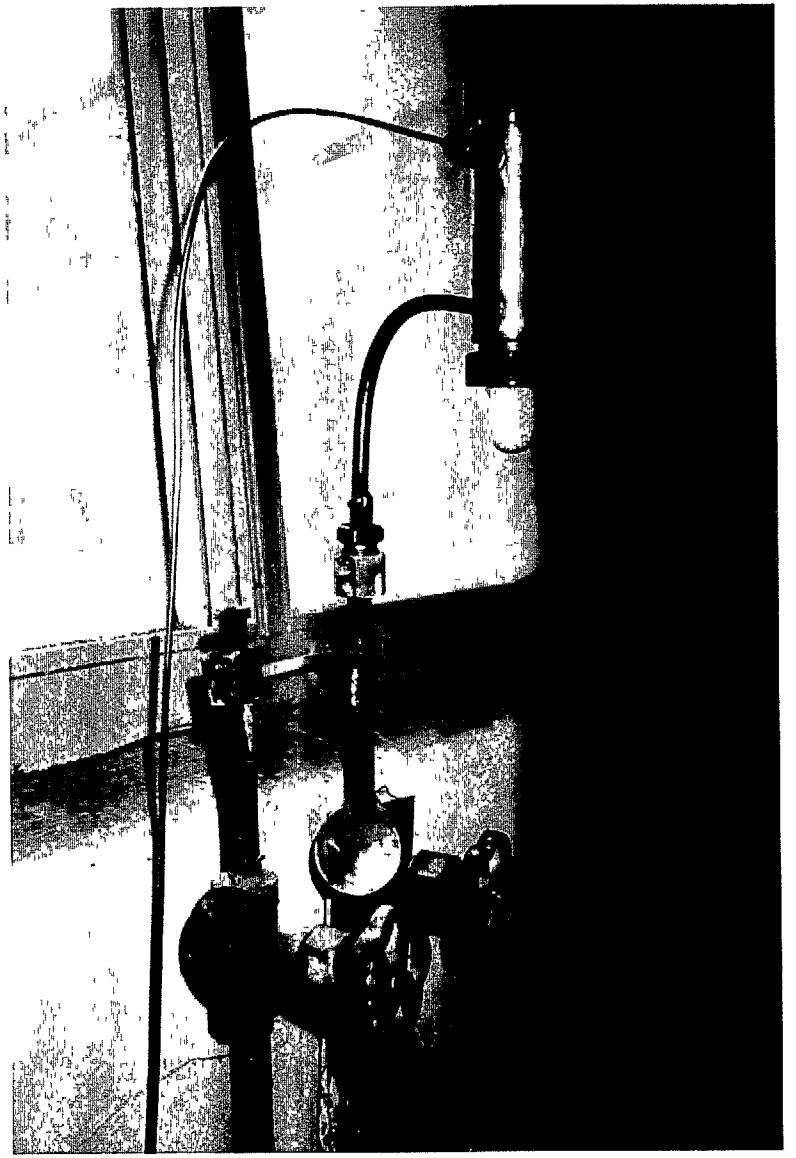

SAMPLE LINE & FILTER

SIMFEROPOL

Location: Simferopol Heat Power Station
Date: June 30, 1997

Re) Trip Status

We arrived at the plant workers living quarters on the evening of 6/26. Alexander Valentinovich escorted us to a two room flat that was made available for our use

Work began with a meeting at the plant at 9.00 AM on the morning of the 27th. Initial meeting was with the Plant Director and Alexander V. We adjourned and began a review of the equipment installation.

The electronic panels were installed in the instrument cabinets located in front of the operators "console". The workmanship was very good on the installation of probes, wiring, electronics and reference air cabinet The reference air is supplied from a small compressor dedicated to the probe installation

The analyzer system is installed in a hot water boiler that was built about 5 - 7 years ago. The probes are in the outside wall of the flue gas downcomer above the air preheater. The boiler has two probes spaced at approximately the 1/4 points (horizontally). The reference air cabinet is at about the same elevation over at the side of the boiler.

Power was switched on for the electronics panel and reference air flow was verified. There was an open thermocouple circuit indication on one of the analyzers. A loose wire behind the panel was located and promptly fixed At this point there was no heat in the boiler as it was not operating Therefore, the actual analyzer indication was not valid The boiler was started up and had reached 650 to 680 deg. C. within about two hours. While waiting for the boiler to heat up, we toured the power plant The analyzers were showing approximately 5 to 6 % oxygen After clarifying operator and maintenance questions the boiler was shut down.

It should be noted that the hot water boiler is not normally operated during the warm months. The plant went to extra effort to be able to start the boiler at this time

We met with Alexander V at 8:00 AM on Saturday to answer any further questions and see some of the surrounding area. Since Monday was a holiday and the director would not be available until Tuesday morning, it was suggested that we delay going to Odessa until Tuesday, July 1st. This was done

Personnel Contacts:

Mr. Chuprinko	Plant Director
Mr. Valentinovich	Chief Engineer, Instrumentation & Control (Litvinov Alexander)
Mr. Kurennsy	Ass't Head, Industrial Technological Workshop (Vasil)
Mr Yaremeko	Metalworker (Yuriy)
Mr. Seiko	Metalworker (Igor)

Recommended Action

1. The plant is quite concerned about not having access to a spare set of electronics. I think there should be a unit available in the Ukraine if not at each plant

May 30, 1997

Delivery Order #06
Task 2 Power Plants Combustion Efficiency

Business Trip Report.
Period: May 20 - 22, 1997
Destination· Simferopol Combined Heat and Power Plant

Completed by, Alexander Filippov,
Burns and Roe Kiev Resident Engineer

During the period from May 20 through May 22 I visited Simferopol CHP plant. The purposes of the trip were:

1) To sign letters of receiving for the equipment supplied by USAID/Burns and Roe
2) To schedule a start-up visit of ZIRTEK and INSTROMET companies technical representatives
3) To teach the plant staff how to operate the supplied energy equipment.

I met with Mr Chuprynko, the plant director, Mr. Cherkesov, Chief engineer, Mr Litvinov, Chief of Control Equipment Department, and several technical specialists

We signed the letters of receiving for the main equipment.

I was shown the installed O2 analyzer at the boiler house. The plant decided to install the O2 analyzer on both of their water heating boilers. The reason for that is that these boilers never operate simultaneously Thus the plant will be able to change analyzers from one boiler to another when its necessary. The installation was 85% completed by May 20 The management confirmed that they will be ready to accept the start-up specialist by June 15.

We discussed the plan of gas chromatograph installation and technical details related with this. Installation of it is to be finished by June 15

We spent almost the whole Thursday, 5/22, at the Crimean Chamber of commerce, trying to obtain a document, certifying the international standard codes for the gases for gas chromatograph This document has been issued and will be needed when the gases will be delivered to the plant in order to clear them through the customs.

During the trip I had three sessions of work with technicians, showing them how to operate the sonic flowmeter.

I provided the management with the new coupons for extra sensors for Enerac 2000 in exchange for the wrong ones they had received together with the equipment.

Burns and Roe Enterprises, Inc.,
Kiev Office
20 Esplanadna St., Kiev 252023, Ukraine
Tel: (38044) 220 1676, 220 8752 Fax: (38044) 227 0200

Total pages

Date: February 21, 1996

Fax to: Mr. Ken Carlson,
B&R Project Manager

Fax No. (101)(202) 408 6835

From: Alexander Filippov

Subject: Business trip report

Business trip report - Simferopol, Ukraine
Energy Efficiency and Market Reform Project
Delivery Order No.6
Task 2. Power Plants Combustion Efficiency

Participants from the plant:
Director - Alexander Chuprinko;
Chief Engineer - Vladimir Cherkesov;
Chief of Technical Department - Valery Babichev.

During the period February 14-17, 1996 Burns and Roe resident engineer in Ukraine Alexander Filippov visited Simferopol Power Plant following its invitation for technical support and discussing business matters.

Two questions were put regarding ENERAC 2000 combustion analyzer supplied by Burns and Roe audit team along with portable equipment. First, chief engineer stated that the plant specialists use ENERAC very actively and obtained big savings with it. But it is already the time to substitute oxygen sensor in the device, which has a one - year lifetime term. In respect of this, Mr. Cherkesov asked me if it was possible to provide the plant with the new oxygen sensor and three other sensors along with energy equipment that Burns and Roe should purchase for the power plant. I promised to check this possibility and in any case to help the plant to establish direct relations with ENERAC supplier in order to by spares in the future. The chief of technical department Valery Babichev indicated that though ENERAC combustion analyzer can be used together with a computer, the software can only be used for storing and retrieving the experimental data. He wished to know whether special software exists that allows to analyze the experimental data and supports decision making process on adjusting combustion regimes. I promised to find out and provide him with such an information.

Then the chief engineer and the director explained that they had business propositions for Burns and Roe as a continuation of our USAID program.

Appendix 1

Simferopol power plant has three 160 T/H BKZ-110 ATM boiler units, two steam turbines 34 MW, two hot water boilers 100 GCal, two gas-turbine units 105 MW.

At present time gas turbines are mostly used as a synchronous condensers and as peakers to cover energy deficit in emergency cases in the Crimean power system.

In 1995 the average electrical load of the power plant was 40.8 MW including 7.8% for self needs. The reason for low level of load is a lack of fuel at the plant.

5425 tons of mazut Q=9284 kcal/kg, 153019M ηc.m. of gas (Q=8057 kcal/kg) fuel were burnt [in 1995] in generating regime.

Annual water consumption is 4 M c.m. from Simferopol reservoir.

The price for gas today is USD80 per 1000 c.m., for mazut - approx. USD104/ton.

Using control devices supplied by Burns and Roe representatives allowed increase efficiency and sufficiently simplify maintenance/adjusting and repairing operations. The Fluke power analyzer is permanently in use, Heat Spy infrared temperature detector is used for measuring temperatures on contact points and surfaces. In particular, several points with damaged thermal isolation were identified and recovered on the main steam line.

ENERAC 2000 combustion analyzer is used for adjusting the plant equipment while changing operation regimes. Its usage in 1995 helped saving 602M ηc.m. of gas (approx. 5 billion karbovanets or approx. USD34000) on each boiler unit of the plant (see Appendix - efficiency calculation).

Appendix 2

Simferopol reservoir water quality.

Качество воды из Симферопольского водохранилища.(1995 год)

Показатель	Max(средн.)	Min
Hardness Жесткость,мг-экв/кг	4.2	2.3
Na Щелочность,мг-экв/кг	5.3	3.5
Salts Солесодержание,мг/кг	283	210
SO^{-2}_4,мг/кг	65	46
pH	7.89	
SiO^{-2}_3,мг/кг	6.2	
Cu^{+2},мг/кг	0.05	
Fe^{+3},мг/кг	0.33	
Cl^-,мг/кг	16	
Окисляемость,мг/кг	2.5	
CO_2,мг/кг	4.5	
NH_3,мг/кг	отсутствует	
Взвешенные в-ва,мг/кг	<10	

TEST 34 BOILER# 5 КВГМ-2 (до наладки режима)
SERIAL # 11003255 before adjusting

ENERAC MODEL 2000
COMBUSTION TEST RECORD

FOR: BURNS & ROE

TIME: 10:17:11
DATE: 03/09/95

FUEL NATURAL GAS:21870 BTU/LB

COMBUSTION EFFICIENCY:	91.8	%
AMBIENT TEMPERATURE:	21	[redacted]
STACK TEMPERATURE:	16	[redacted]
OXYGEN:	14.4	%
CARBON MONOXIDE:	0	MGM
CARBON DIOXIDE:	03.6	%
COMBUSTIBLE GASES:	0.20	%
STACK DRAFT (INCHES H2O):	- 3.0	
EXCESS AIR:	201	%
OXIDES of NITROGEN:	42	MGM
SULFUR DIOXIDE:	0	MGM
CARBON MONOXIDE ALARM:	1990	PPM

MODE:MGM OXY_REF=TRUE%

TEST 35 BOILER# 5 КВГМ№2 (после наладки режима,
SERIAL # 11003255 after adjusting

ENERAC MODEL 2000
COMBUSTION TEST RECORD

FOR: BURNS & ROE

TIME: 10:26:27
DATE: 03/09/95

FUEL NATURAL GAS:21870 BTU/LB

COMBUSTION EFFICIENCY:	94.4	%
AMBIENT TEMPERATURE:	22	[redacted]
STACK TEMPERATURE:	25	[redacted]
OXYGEN:	03.9	%
CARBON MONOXIDE:	94	MGM
CARBON DIOXIDE:	09.6	%
COMBUSTIBLE GASES:	0.02	%
STACK DRAFT (INCHES H2O):	- 4.1	
EXCESS AIR:	21	%
OXIDES of NITROGEN:	51	MGM
SULFUR DIOXIDE:	0	MGM
CARBON MONOXIDE ALARM:	1990	PPM

MODE:MGM OXY_REF=TRUE%

TEST 36 BOILER# 5 _____

BEST AVAILABLE COPY

ENERAC MODEL 2000
COMBUSTION TEST RECORD

FOR: BURNS & ROE

TIME: 10:49:38
DATE: 12/15/95

КВТМ-100 ИМZ наладка режима during adjusting

FUEL NATURAL GAS:21870 BTU/LB

COMBUSTION EFFICIENCY:	98.5	%
AMBIENT TEMPERATURE:	9	■C
STACK TEMPERATURE:	11	■C
OXYGEN:	10.5	%
CARBON MONOXIDE:	0	MGM
CARBON DIOXIDE:	05.9	%
COMBUSTIBLE GASES:	0.00	%
STACK DRAFT (INCHES H20):	- 11.6	
EXCESS AIR:	90	%
OXIDES of NITROGEN:	177	MGM
SULFUR DIOXIDE:	0	MGM
CARBON MONOXIDE ALARM:	1990	PPM

MODE:MGM OXY_REF= 0%

TEST 6 BOILER# 5
SERIAL # 11003255

ENERAC MODEL 2000
COMBUSTION TEST RECORD

FOR: BURNS & ROE

TIME: 10:52:41
DATE: 12/15/95

КВТМ-100 ИМZ после наладки режима after adjusting

FUEL NATURAL GAS:21870 BTU/LB

COMBUSTION EFFICIENCY:	86.2	%
AMBIENT TEMPERATURE:	9	■C
STACK TEMPERATURE:	16	■C
OXYGEN:	06.9	%
CARBON MONOXIDE:	125	MGM
CARBON DIOXIDE:	07.9	%
COMBUSTIBLE GASES:	0.81	%
STACK DRAFT (INCHES H20):	- 11.0	
EXCESS AIR:	43	%
OXIDES of NITROGEN:	155	MGM
SULFUR DIOXIDE:	0	MGM
CARBON MONOXIDE ALARM:	1990	PPM

MODE:MGM OXY_REF= 0%

TEST 7 BOILER# 5

BEST AVAILABLE COPY

TEST 59 BOILER# 1 Пиреевский котел DK3-160-100
SERIAL # 11003255 до начала ремонта

ENERAC MODEL 2000
COMBUSTION TEST RECORD

FOR: BURNS & ROE

TIME: 13:33:17
DATE: 05/11/95

FUEL NATURAL GAS:21870 BTU/LB

COMBUSTION EFFICIENCY:	72.5	%
AMBIENT TEMPERATURE:	18	[redacted]C
STACK TEMPERATURE:	374	[redacted]C
OXYGEN:	06.0	%
CARBON MONOXIDE:	7	MGM
CARBON DIOXIDE:	08.4	%
COMBUSTIBLE GASES:	0.00	%
STACK DRAFT (INCHES H2O):	+ 9.2	
EXCESS AIR:	36	%
OXIDES of NITROGEN:	118	MGM
SULFUR DIOXIDE:	0	MGM
CARBON MONOXIDE ALARM:	1990	PPM

MODE:MGM OXY_REF=TRUE%

TEST 60 BOILER# 1
SERIAL # 11003255

ENERAC MODEL 2000
COMBUSTION TEST RECORD

FOR: BURNS & ROE

TIME: 13:57:50
DATE: 05/11/95

FUEL NATURAL GAS:21870 BTU/LB

COMBUSTION EFFICIENCY:	95.2	%
AMBIENT TEMPERATURE:	22	[redacted]C
STACK TEMPERATURE:	19	[redacted]C
OXYGEN:	02.4	%
CARBON MONOXIDE:	23	MGM
CARBON DIOXIDE:	10.4	%
COMBUSTIBLE GASES:	0.04	%
STACK DRAFT (INCHES H2O):	+ 10.2	
EXCESS AIR:	12	%
OXIDES of NITROGEN:	138	MGM
SULFUR DIOXIDE:	0	MGM
CARBON MONOXIDE ALARM:	1990	PPM

MODE:MGM OXY_REF=TRUE%

BEST AVAILABLE COPY

Appendix 4

Р А С Ч Е Т

экономического эффекта от внедрения технологии определения кислорода в ух. газах котлоагрегата N 1 на Симферопольской ТЭЦ с помощью прибора "ENERAC-2000".

Применение технологии определения кислорода в ух.газах позволяет вести процесс сжигания газообразного топлива в топках котлоагрегатов с предельно малыми избытками воздуха, в результате чего уменьшаются:

1/ потери тепла с уходящими газами
2/затраты энергии на тягу и дутье
3/ снижается скорость коррозии металлических поверхностей нагрева газового тракта
4/ сокращается объем токсичных выбросов в окружающую среду

Расчет экономического эффекта ведем по формуле:

$$\text{дельтаВ/экономия топлива/} = \frac{\text{Дн/iн-iнв//дельтаq/100/}}{\text{Qн* Нка}}$$

где Дн-расход пара / по данным ПТО/
iн-энтальпия пара/ " /
iнв-энтальпия воды/ " /
Дн/iн-iнв /=712683-выработка котлом пара за год
Нка- к.п.д. котла= 0,939
Qн- теплотворная способность газа=8,057/ по данным ПТО/
дельтаq- изменение коэффициента избытка воздуха

$\text{дельтаq}=q_1-q_2$

где q_1 -коэффициент избытка воздуха до применения технологии
q_2 -то же после применения технологии

/1/ $q_2 = /Kq\,\alpha ух.+e/x//tух-\alpha ух./\alpha ух.+B\times/tхв./ x/At\ Kq\times 100^{-2}$ %

где 1/ tхв. за 1994 год=34 /по данным ПТО/
2/ αух.-коэфф. расхода избытка воздуха до примен. технологии
αух.= /21-0,01x5,9 //21-5,9=1,3868 /
3/ tух.-температура ух.газов= 142 / по данным ПТО/
4/в=0,18/по данным ПТО/
5/к=3,52/ " /
6/е=0,63/ " /
7/Kq=/по данным ПТО/
8/ 1-0,013/Тух.-150/ /100 =1
9/Т.о. подставляя в ф/1/: q_2 = 6,1677
10/αух2=21-0,01x3,8/21-3,8=1,2187

BEST AVAILABLE COPY

11/q = 5,5286
1

12/q − q = 6,1677 − 5,5286 = 0,6391
2 1

$$13/\text{дельтаВ} = \frac{712683 \times 0{,}6391 \times 10^{6}}{8{,}057 \times 0{,}939 \times 100} = 602041 \text{ тыс.нм}^{3}$$

стоимость 1 тыс.нм³ газа=9680740руб/по данным ПТО/

Э = 602041 × 9680740 = 5 828 202 300

пять миллиардов восемьсот двадцать восемь миллионов двести две тысячи триста карбованцев

Начальник ПТО Баевчев В.Н.

Начальник ПО Сиротинн В.А.

Начальник ЦТАИ Литвинов А.В.

BEST AVAILABLE COPY

Appendix 4

Calculation
of economic efficiency [annual] achieved due to implementation
of the technology of identification of oxygen level
in flue gases at boiler No.1 of Simferopol Power Plant
using ENERAC 2000 device.

Implementation of the technology of identification of excess air oxygen allows to fire gas fuel in boiler furnaces with minimum level of excess air thus reducing:

1. heat losses in flue gas
2. energy consumption for blow
3. speed of corrosion on metal heating surfaces
4. pollution

.....
.....

E = 5'828'202'300 KBV (approx. USD 34000)

APPENDIX A-1

Energy Conservation Opportunities (ECO's)

ECO-03 AND ECO-04 CALCULATIONS

IN-SITU OXYGEN ANALYZERS AND MAZUT FLOW METERS

1 0 INTRODUCTION

The boilers air to fuel ratio is controlled manually The existing extractive paramagnetic type oxygen analyzers are maintained and calibrated However, the instruments are prone to being fouled by moisture and acid sludge from the flue gas. Also, there is a significant time lag between sample point and readout The biggest problem with the existing extractive analyzers is that the sample is taken after major air in-leakages has already occurred. Installation of in-situ zirconium oxide cells upstream of major in-leakages would improve reliability, response, and accuracy of readings.

2 0 ASSESSMENT OF POTENTIAL EXCESS OXYGEN REDUCTION

There is the potential to reduce the levels of excess oxygen at the Simferopol units This potential is based on the current levels of excess oxygen that are maintained at the burners In order to assess this potential, it is necessary to evaluate the measured excess oxygen levels and account for air in-leakage through the various sections of the boiler. Normal burner design for gas fired burners is an excess oxygen level at the burners of 2.0% For burners of this design and vintage, it would be more appropriate to assume that the excess oxygen level would be closer to 2 5%. These are the minimum levels required for stable flames and proper combustion. Excess oxygen levels higher than this provide the opportunity for a reduction in the operating levels

2 1 Evaluation of Excess Oxygen at the Burners

At full load firing gas, the excess oxygen was measured at the convection pass to be 5.0%, for test 1 This test point was considered to be the normal operating condition for full load The air in-leakage between the measured point and the burners would be 8.0% Using the curve to convert the measured excess oxygen to the excess oxygen at the burners indicates 3 85% excess oxygen at the burners. The measured carbon monoxide levels for this tests was very low This indicates that the excess oxygen at the burners can be reduced

Accounting for the existing burner design, the minimum excess oxygen at the burners would be assumed to be approximately 2.5%. Thus, the potential reduction in excess oxygen at the burners would be 3 85 - 2.5 = 1 35%

2.2 Effect of Excess Oxygen on Boiler Efficiency

Boiler efficiency is calculated based on the ASME Boiler Test Code, PTC-4 1 The losses in boiler efficiency affected by the excess oxygen levels are the dry flue gas loss and the moisture in air loss The dry flue gas loss is the loss of heat determined by the flue gas flow and the difference in temperature of the flue gas and the ambient air. The moisture in air loss is the same loss calculated for the moisture that is contained in the air.

The reference excess oxygen was selected to be 2 0%, which is typical for gas fired burners of this design and vintage Boiler efficiency was calculated for excess oxygen levels up to 5%, to account for possible operating conditions above the optimum

A curve of the efficiency loss due to high excess oxygen is shown below

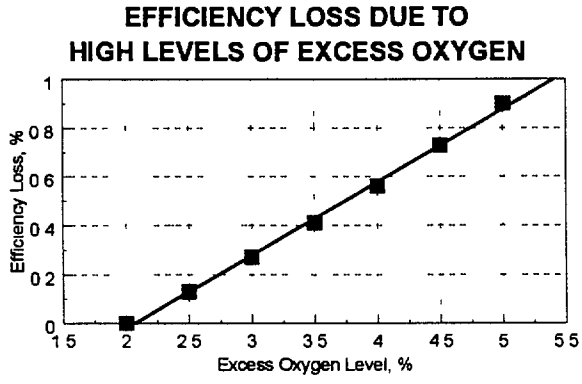

2.3 Boiler Efficiency Possible With Reduced Excess Oxygen Operation

Based on the data collected during the visit to the plant it appears that it is possible to operate the boilers at reduced excess oxygen levels. It has been shown that the potential excess oxygen reduction possible at the burners is approximately 1.35%. This would reduce the excess oxygen from 3.85% to 2.5%. Using the curve shown above, the boiler efficiency saving would be 0 36%

3 0 COST ANALYSIS

Fuel savings can be realized by replacing existing extractive oxygen analyzers with zirconium oxide sensor probes placed directly into the flue gas path to be able to better control excess air for combustion In addition, mazut flow meters are required to realize benefit from lower excess air

Equipment Cost

ECO-03	Oxygen analyzers, 1 unit, 2 probes	$29,000
ECO-04	Mazut sonic flow meters, 4 required	$16,000

Based on test results, it is estimated that a modest 0 36% increase in boiler efficiency can be achieved from better control and reduction of excess air required for combustion, which will result in a 0 36% decrease in fuel costs.

Power Boiler No 1 Capacity

Steam pressure	=	110 ATM
	=	1595 PSI
Steam temperature	=	540° C
	=	1004° F
Total heat of steam (h_s)	=	1487 BTU/lb
Steam production capacity	=	160 Tonnes/Hr
	=	352,640 lb/Hr
Feedwater temperature	=	196° C
	=	385° F
Total heat of water (h_f)	=	354° F
Gas high heating value (HHV)	=	16,598 BTU/lb
1994 power generation	=	363,279,000,000 KWH
1994 gas consumption	=	5 518 x 10^{12}BTU

150MW gas turbine (105MW net) is used as a peaking unit and·

Turbines

50,000KW x 9 5 lbs/KWH	=	475,000 lbs/Hr steam
(Assume 9500 BTU/KWH		x 2 turbines
or 9 5 lbs steam/KWH)		
		950,000 lbs/Hr steam
Auxiliaries	=	107,920 lbs/Hr steam
		1,057,920 lbs/Hr steam

Boilers

160,000 Kg/Hr x 2 204 lbs/Kg	=	325,640 lbs/Hr steam
		x 3 boilers
		1,057,920 lbs/Hr steam

Fuel lbs/Hr	=	Steam lbs/Hr (h_s - h_f)/boiler eff x HHV BTU/lb
	=	1,057,920 (1487 - 354)/0.84 x 16,598
	=	85,970 lbs/Hr natural gas/on 3 boilers
	=	28,657 lbs/Hr natural gas per boiler
Annual fuel	=	28,657 lbs/Hr x 16,598 BTU/lb x 8760 Hr/Yr x 0.35 capacity factor
	=	1.458 x 10^{12} BTU/Yr natural gas per boiler

Simple Payback for O_2 Analyzers - 1994 Prices

Fuel cost per boiler per year = 1 458 x 10^{12} x \$0 747/10^6 BTU = \$1,089,379
Savings per year due to boiler efficiency improvement = 0 0036 x \$1,089,379 = \$3922
Payback = \$29,000/3922 = 7 4 years

Simple Payback for O_2 Analyzers - World Prices

Fuel cost per boiler per year = 1 458 x 10^{12} x \$2 10/10^6 BTU = \$3,062,513
Savings per year due to boiler efficiency improvement = 0 0036 x \$3,062,513 = \$11,025
Payback = \$29,000/11,025 = 2.6 years

Simple Payback for O_2 Analyzers and Sonic Flow Meters - 1994 Prices

(\$29,000 + \$16,000)/\$3922 = 11 5 years

Simple Payback for O_2 Analyzers and Sonic Flow Meters - World Prices

(\$29,000 + \$16,000)/\$11,025 = 4 years

NOTE

These payback values are based on a very low capacity factor for these boilers. The capacity factor is based on the total gas consumption and power generated which includes the 105MW gas turbine peaker and hot water peaker boilers. If the power boilers and turbines were operated at full load, the payback periods would be substantially reduced

ECO-05 - Calculation

Online Gas Calorimeter

Reported heating value specification for Russian natural gas is 8116 Kcal/Kg. However, the technical specialists complain that the delivered heating value runs low by as much as 143 Kcal/Kg when the plant is paying for gas on a volumetric basis. They want to be able to measure the gas deliveries on the basis of heat content. An online gas calorimeter measuring and recording Kcal/Kg and Sp. Gr. costs about $35,000.

Delivered Natural Gas

213,300,000 Nm^3/Yr x 0.7207 Kg/Nm^3 = 153,725,310 Kg/Yr

153,725,310 Kg/Yr x 142.7 Kcal/Kg = 2.194 x 10^{10} Kcal/Yr

2,194 x 10^{10} Kcal/Yr x 3.9685 BTU/Kcal = 8.705 x 10^{10} BTU/Yr

Simple Payback - Domestic Price

8.705 x 10^{10} BTU/Yr x $0.747/$10^6$ BTU = $65,029/Yr

$35,000/$65,029 = 0.54 Yr = 6.5 months

Simple Payback - World Price

8.705 x 10^{10} BTU/Yr x $2 10/$10^6$ BTU = $182,805 Yr

$35,000/$182,805 = 0.16 Yr = 2.3 months

APPENDIX A-2

Vendor Information

OXYGEN ANALYZER WITH CONTROL ROOM ELECTRONICS

FEATURES

- *Totally Field Repairable Probe*
- *Patented Electronic Cell Protection*
- *Rugged 316 SS for all Wetted Parts*
- *Flexible Electronics Configuration*
- *Control Room Electronics Module can be Integrated with up to 8 World Class 3000 Probes (16 with Master/Slave) Averages up to 8/16 World Class 3000 Probes*
- *Easy Calibration*
- *No Potentiometers to Adjust*
- *Quick Change Diffusion Element*
- *Field-Repairable Cell Design*
- *Field-Repairable Heater/ Thermocouple*
- *Flame Arrestor (Optional)*

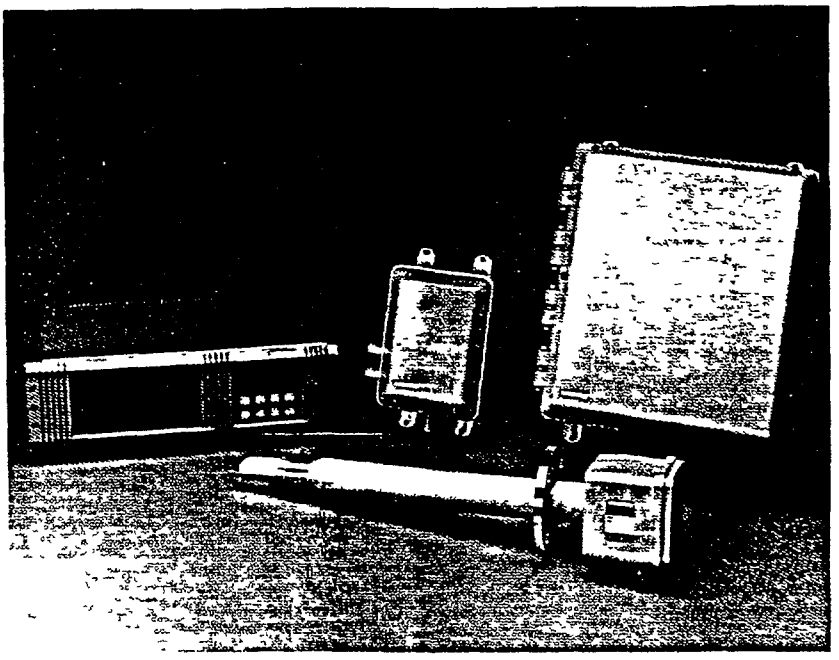

WORLD CLASS TECHNOLOGY FROM THE WORLD LEADER

Rosemount is the leader in oxygen flue gas analyzer technology Rosemount incorporated the Hagan analyzer and combustion expertise The Hagan in situ, zirconium oxide oxygen analyzer has long been established as the industry-standard. Rosemount has combined this Hagan expertise with state-of-the-art features into one package — the World Class 3000 Oxygen Analyzer The World Class 3000 is established as the standard-of-the-industry

The World Class 3000 is totally field repairable as internal components are conveniently accessible for using in-house service personnel For example, the heater/thermocouple probe assembly can be replaced and put back into service by in-house personnel in one-half hour or less This repair is made without requiring the probe tube to be removed from the process

The Hagan zirconium oxide sensor cell incorporates a patented electronic cell-protection feature that automatically protects the sensor electrodes from reducing atmospheres often found in many combustion processes

For those applications where more than one oxygen analyzer will be installed on-site, the World Class 3000 Oxygen Analyzer together with the microprocessor-based CRE 3000 Control Room Electronics module is a cost-effective solution

. he CRE 3000 Control Room Electronics module allows interfacing with up to eight World Class 3000 probes (16 with master/slave) via the HPS 3000 Field Interface Module This flexible, easily expanded, electronics arrangement allows the World Class 3000 probes to be linked to the Control Room Electronics module without the added cost of requiring intelligent field electronics (IFT 3000)

The CRE 3000 improves the accuracy of the combustion control process as it averages the oxygen results thereby reducing errors due to stratification Up to 4 averages of any probe combinations can be user-defined.

The HPS 3000 Field Interface Module provides local power to the oxygen probe. It is connected to the CRE 3000 at a distance of up to 1200 feet with low cost signal cable The HPS 3000 module is housed in a standard NEMA 4X (IP65) enclosure for full weather and corrosion-proof protection It is also available in an optional explosion-proof Class 1, Division 1 enclosure to allow low-cost adaptability of the World Class 3000 electronics to hazardous gas areas.

Users with multiprobe applications may also choose an optional MPS 3000 Multiprobe Test Gas Sequencer The MPS 3000 provides automatic test gas sequencing for up to four (4) World Class 3000 probes to accommodate fully automatic micro-processor-based calibration of the analyzer packages.

Supersedes Product Data 106-300NC,
Pages 1-8, dated March, 1992

ROSEMOUNT®

47

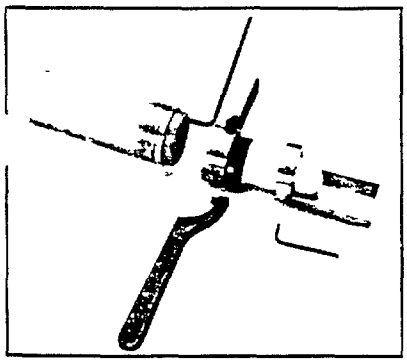

Filter Head Assembly

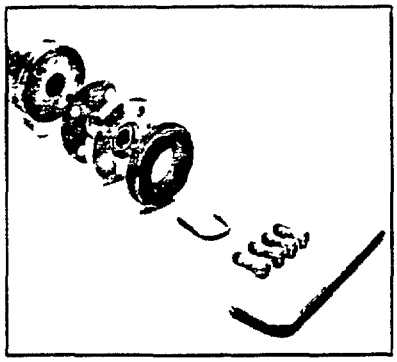

Sensor Cell Assembly

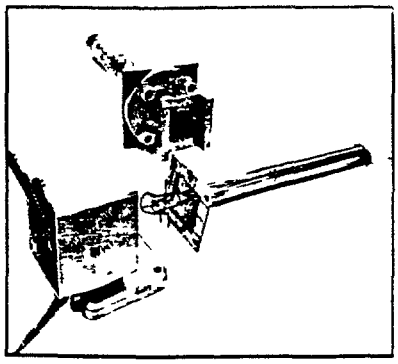

Heater Thermocouple Assembly

OXYGEN SENSOR

Features	Benefits
Rapid accurate and reliable measurement of excess oxygen with a single, in situ probe	Significant fuel savings normally pay for analyzer in less than one year Significant enhancement in safety
Electrodes are self protected by patented electronic diffusion limited current mode of operation	Provides long life for sensing element even in the presence of sulphur and reducing atmospheres
No sample system, no sample probes no scrubbers and no pumps are necessary, test gas calibration check without disturbing probe	Low installation and low maintenance costs
High speed of response	Ideal for closed loop control
Solid zirconium oxide electrolyte	Provides high reliability
Field-replaceable cell	Ease of maintenance
Suitable for use in temperatures up to 1300°F (700°C)	May be used with any fuel. Absolutely no condensation
Material of construction 316 LSS (all wetted parts)	High resistance to corrosion
Sensitivity of cell increases logarithmically when oxygen decreases	Very useful for low oxygen levels. Ideal for low excess air burners

ADDITIONAL FEATURES

- Output voltage and sensitivity increase as the oxygen concentration decreases
- Use with any fuel including coal or residual fuel burners Diffusion element keeps cell clean while the V-deflector protects the diffusion element
- Unique patented electronic cell protection feature automatically protects sensor cell when analyzer detects reducing atmospheres
- Output suitable for use with receivers such as indicators, recorders, controllers, data loggers or computers
- Optional flame arrestor
- Optional abrasive shield for extremely harsh environments, including high velocity particulates in flue stream, installation within 10 ft (3m) of soot blowers or heavy salt cake buildup Specific applications pulverized coal, recovery boilers and lime kilns

DIGITAL ELECTRONICS FEATURES

- Control Room Electronics module (CRE 3000) can interface with up to eight (8) World Class 3000 probes (16 with master/slave) Provides all necessary intelligence for controlling the probe and optional MPS 3000 Multiprobe Gas Sequencer
- CRE 3000 Electronics provides user friendly, menu-driven operator interface with context-sensitive, on-line help
- CRE 3000 Electronics averages the process data as defined by user This reduces inaccuracies due to stratification
  Remote contact initiates calibration
  HPS 3000 Field Interface Module allows interfacing of World Class 3000 probe and CRE 3000 without requiring intelligent field electronics or expensive cabling
- Optional explosion-proof HPS 3000 enclosure allows low-cost adaptability to World Class 3000 electronics in hazardous areas
- Optional MPS 3000 Multiprobe Test Gas Sequencer provides fully automatic test gas calibration and reference air for up to four (4) World Class 3000 probes. MPS 3000 can be located up to 300 ft (91m) from World Class 3000 probe
- Optional stack temperature and combustion efficiency measurement Stack thermocouple required.
- Probe heater over temperature protection with software disable as standard Hardware disable (line voltage relay) requires one additional twisted pair HPS/CRE cable

48

WORLD CLASS FAMILY OF ELECTRONICS

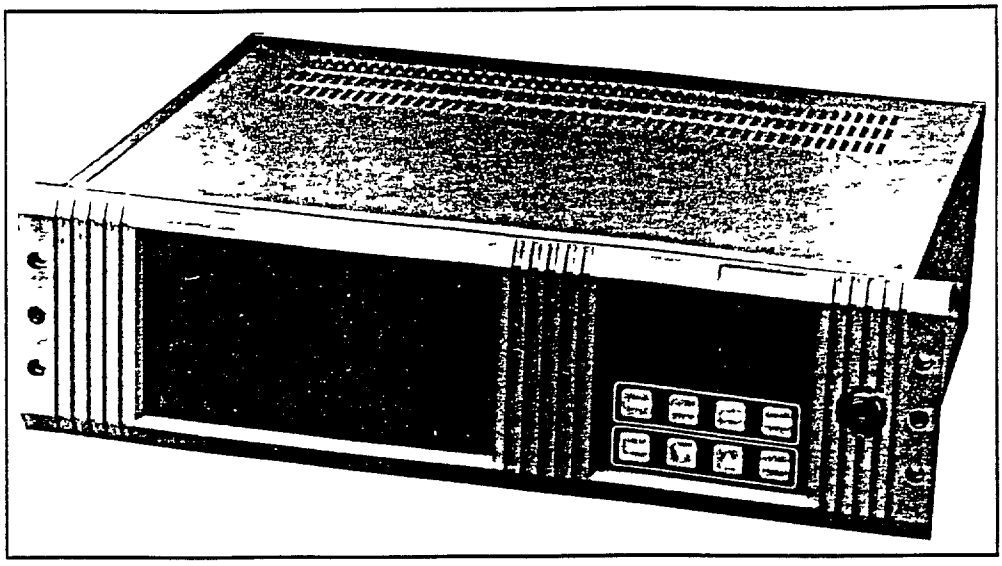

CRE 3000 Control Room Electronics Module

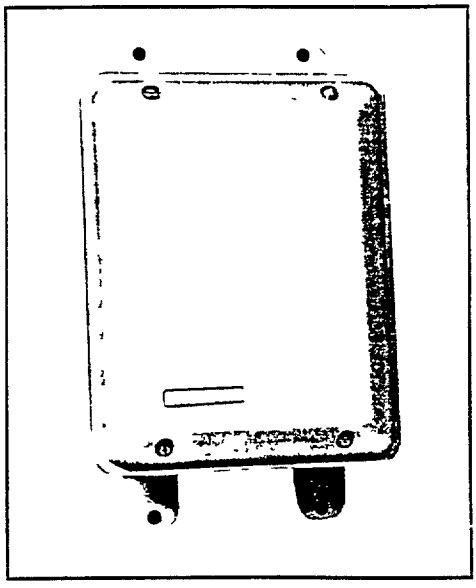

HPS 3000 Field Interface
(NEMA 4X Non-hazardous Enclosure)

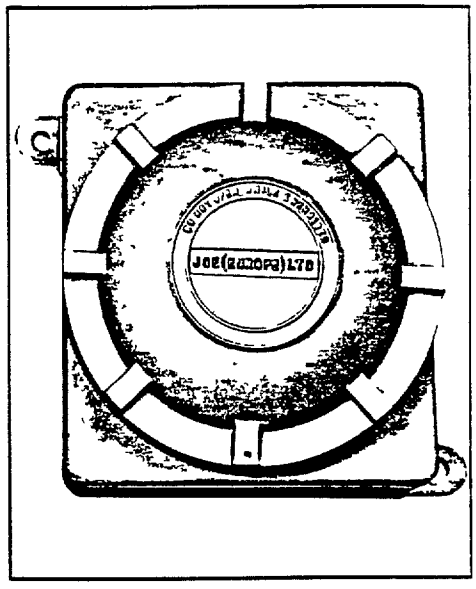

HPS 3000 Field Interface
(Explosion-Proof Enclosure)

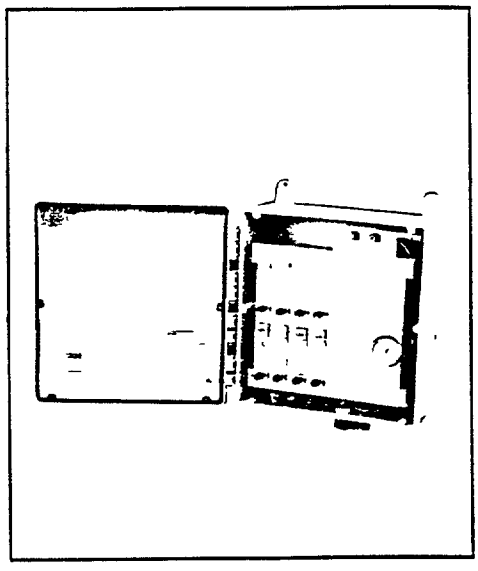

Optional MPS 3000 Multiprobe Test Gas Sequencer

SPECIFICATIONS①

OXYGEN SENSING EQUIPMENT

robe lengths, nominal: 18 inches, 3 feet, 6 feet, 9 feet, 12 feet depending upon duct dimension
Probe material of construction· 316 LSS (all wetted parts)
Temperature limits for probe in process measurement area: 50 to 1300°F (10 to 700°C)
Cell speed of response. 1 millisecond
Probe reference air flow (optional) 2 SCFH clean dry instrument quality air (20 95% O_2) Reference air set supplied as standard

Calibration gas mixtures: Rosemount Test Gas Kit Part No 6296A27G01 contains 0 4% O_2N_2 Nominal and 8% O_2N_2 Nominal Other suitable gas mixtures can be user supplied
Calibration gas flow: 5 SCFH
Approximate shipping weights:
18 inch (457 mm) package: 55 pounds (24 97 kg)
3 foot (0.91 m) package: 60 pounds (27 24 kg)
6 foot (1.83 m) package: 66 pounds (29 94 kg)
9 foot (2.74 m) package: 72 pounds (32 66 kg)
12 foot (3.66 m) package: 78 pounds (35 38 kg)

CRE 3000 CONTROL ROOM ELECTRONICS

Ambient environment requirements· Clean, Dry
Ambient temperature range 40 to 120°F (4 to 50°C)
Vibration· Slight· 30 degree drop test
Number of probes. 8 maximum expandable to 16 with slave CRE 3000
Communications 1 RS 232 for communication with slave CRE 3000 (max 50 feet (15m)
Analog outputs 2-12 isolated outputs 0-20 mADC, 4-20 mADC into 950 ohm max, 0-10 VDC into 2K ohm min
O_2 indication (analog output) ±0 1% O_2 or ±3% of reading, whichever is greater
Power supply 110/115/220V ±10% Vac at 50/60 Hz
Power requirements 100 VA

System speed or response (amplifier output): less than 3 seconds
Resolution sensitivity — Transmitted Signal 0 01% O_2
O_2 range. Field Selectable (0-1%, 0-5%, 0-10%, 0-25%, 0-100%)
Programmable contact outputs: 8 available, Form-C, 48 V max, 100 mA max
Indicators: LED indicators for system failure (failure description available on LED panel)
Calibration in progress for each of 8 probes, O_2 Hi/Lo Alarm for each of 8 probes Probe failure for each of 8 probes
Programmable displays· 2 line, 0 8 inch high, 8 digit, alphanumeric LED displays for individual or averaged results
Operator interface: 4 line by 20 character backlight LCD alphanumeric display, 8 key general purpose keyboard.
Approximate shipping weight: 35 pounds (15 88 kg)
Averaging: 4 user-definable averages of 2 to 8 probes

HPS 3000 FIELD INTERFACE

Electrical classification: NEMA 4X (IP65) Optional - Class 1, Division 1, Group B
Humidity range: 95% Relative Humidity
Ambient temperature range· -20 to 140°F (-30 to 60°C)
Vibration: 5 m/sec², 10 to 500 xyz plane
External electrical noise· Minimum interference
Cabling distance between HPS 3000 and probe: Maximum 150 feet (45 m)
Cabling Distance between HPS 3000 and CRE 3000. Maximum 1200 feet (364 m)
Approximate shipping weight· 12 pounds (5 44 kg)
Power supply 100/115/220V ±10% Vac at 50/60 Hz
Power requirements: 200 VA

MPS 3000 MULTIPROBE TEST GAS SEQUENCER (OPTIONAL)

Electrical classification: NEMA 4X (IP65)
Humidity range: 95% Relative Humidity
Ambient temperature range: -20 to 140°F (-30 to 71°C)
Vibration· 5 m/sec², 10 to 500 xyz plane
External electrical noise: Minimum interference
Piping distance between MPS 3000 and probe: Maximum 300 feet (91 m)
Cabling distance between MPS 3000 and CRE 3000: Maximum 1000 feet (303 m)
Approximate shipping weight: 35 pounds (15 88 kg)
Power supply: 100/115/220V ±10% Vac at 50/60 Hz
Power requirements: 15 VA
Piping requirements: 1/4" o.d. tubing, 1/4" NPT bulkhead connectors (high gas in, low gas in, ref air in, 4 x test gas out, 4 x ref air out)

① All static performance characteristics are with operating variables constant
Specifications subject to change without notice

50

WITH CONTROL ROOM ELECTRONICS

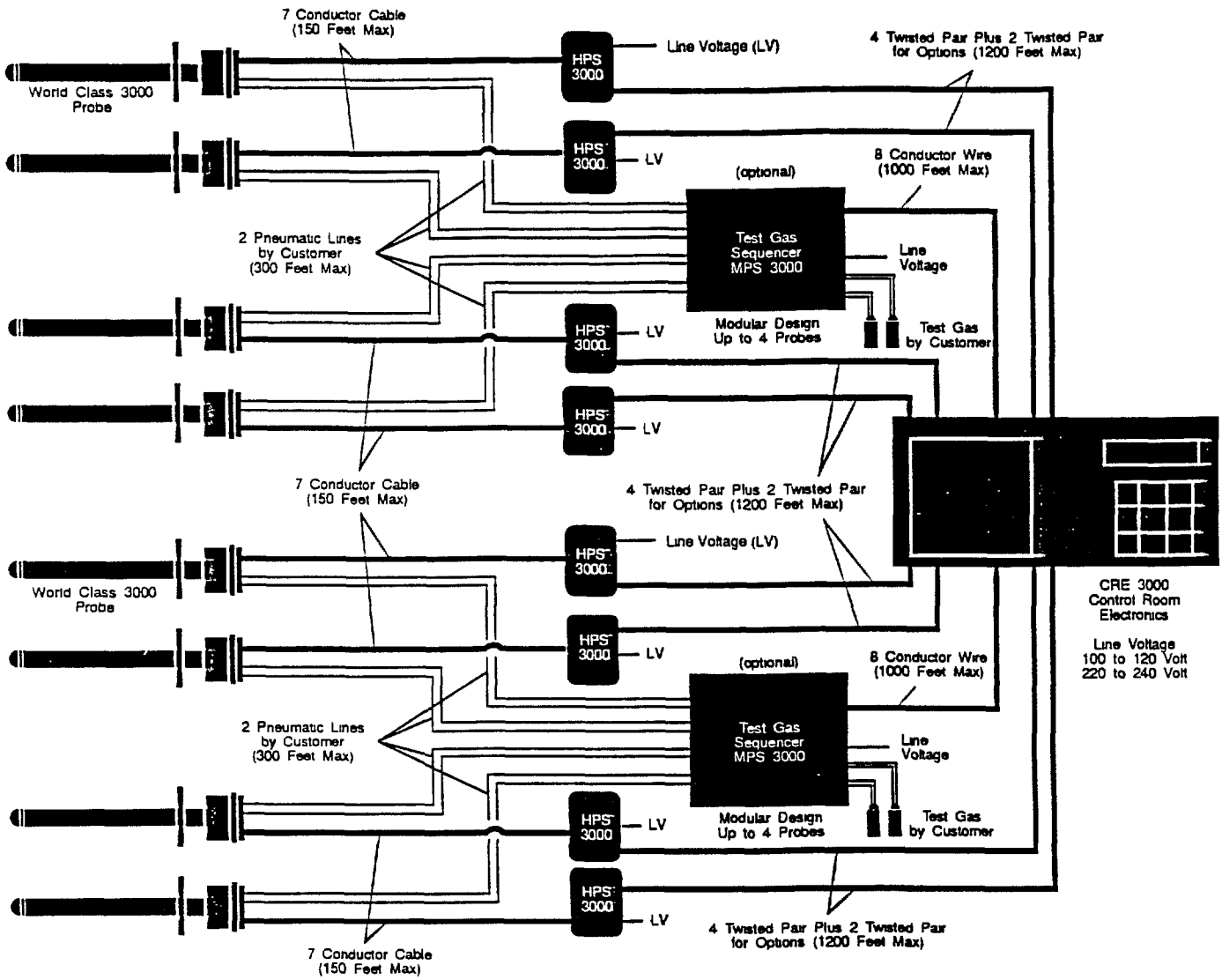

Recycled Paper

inted in the USA
Rosemount Analytical Inc 1993

ROSEMOUNT®

Measurement
Control
Analytical

51

AACC/Zircoa™

HIGH TEMPERATURE OXYGEN SENSORS

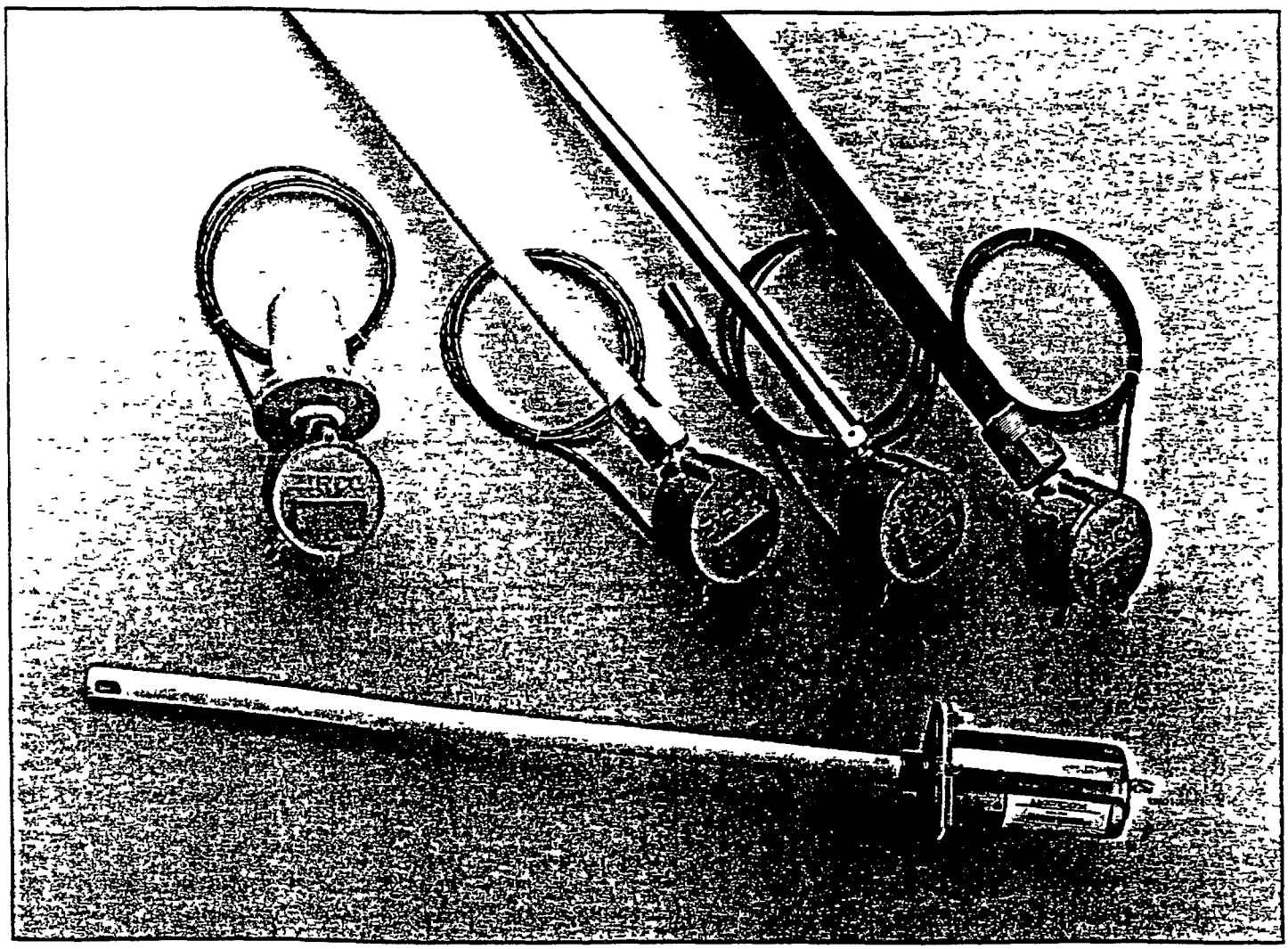

Model 8212

This sensor is designed to fulfill the special requirements of the Glass Industry Model 8212 provides reliable O_2 measurement in positive pressure tanks, even in conditions of significant "Batch Carryover"

Model 8081

The versatility of this "workhorse" sensor is proven by its industry-wide applications around the world You can expect Model 8081 to provide dependable O_2 measurement in numerous coal, gas, oil and waste-fired environments.

Model OX

Model OX provides the critical measurements you need in a state-of-the-art rebuildable design. Available option permits use of a portable extractive device to verify oxygen readings

Design and operating advantages common to all ACC/ZIRCOA Oxygen Sensors.

- Solid-state design.
- Integral thermocouple (B R S)
- Place directly into combustion chamber
- Operating temperature range 1200 - 2900° F (650 - 1600° C)
- Terminal head rating 300° F (150° C) maximum.
- Responds instantly to changes in furnace atmosphere
- No sample lines to plug or leak.
- No heaters to calibrate or fail.
- Little or no maintenance required.
- Optional quick-disconnect sensor lead wire
- Installation mounting assemblies available
- Accuracy of ± 5% of the observed process variable, ie pv=2.0%±0.1%

Model 8212

- 6" (152mm) sensor with ceramic mounting plug
- Mount in melter crown backwalls recuperator stacks regenerator crown/target walls
- Designed to withstand attack from high vapor pressure metals

Model 8081

- Patented boot protects electrode
- Alloy, alumina and silicon carbide protection tubes available
- Lengths available from 18 to 42" (457 to 1067mm.)

Model OX

- Optional verification port.
- Lengths available from 20 to 36" (508 to 914mm)
- Rebuildable
- Alloy and alumina protection tubes available

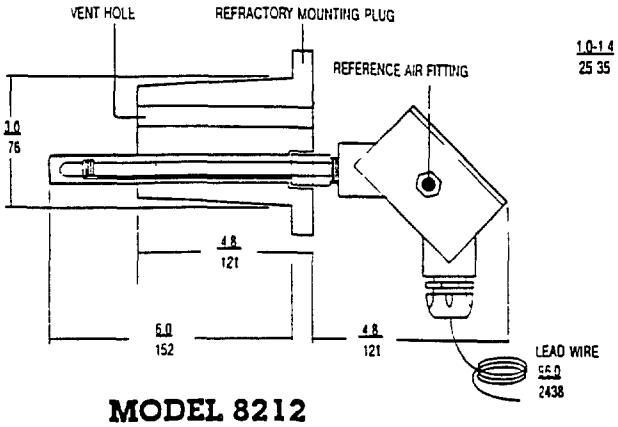

MODEL 8212

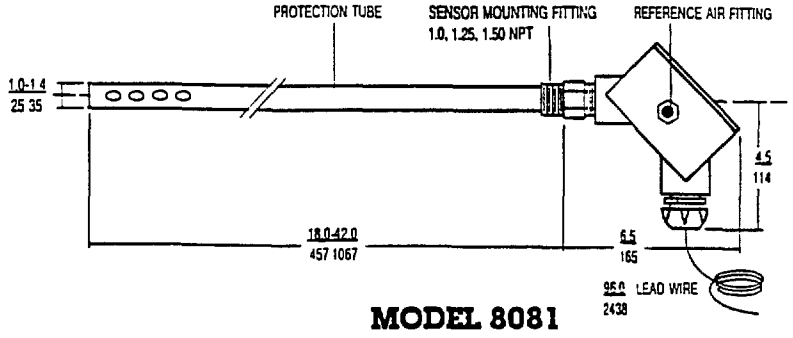

MODEL 8081

ALL DIMENSIONS
INCHES
MM

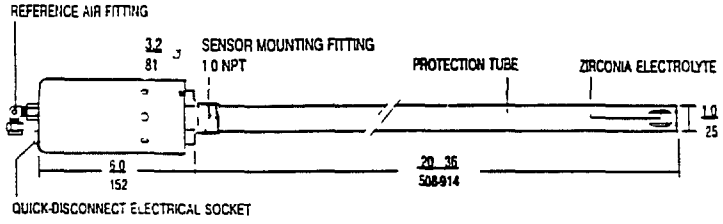

MODEL OX

For specific application information, please call.

Caution. Oxygen sensors should be used only for oxygen *trim* not direct air control. Sensors should be connected to appropriate trim or process control instruments which only allow the *re-tuning* of the air/fuel mixture. Use of oxygen sensors for total independent control of combustion may result in combustion air shut-down which could lead to explosion and environmental (emissions) hazards.

AACC/Zircoa
DIVISION OF ZIRCOA, INC
31711 SOLON ROAD
SOLON, OHIO 44139
TEL (216) 349-7220
FAX (216) 248-8864

A Member of the DIDIER Didier Group

Copyright 1991, McGraw-Hill, Inc. All rights reserved.

Utilities

High-temp O_2 measurement improves boiler performance

Looking for ways to improve plant heat rates Northern Indiana Public Service Co (Nipsco) has installed high-temperature O_2 sensors in the furnace and convection passes of several of its boilers, beginning with Units 7 and 8 at its Bailly generating station with good results

The problem Units 7 and 8 are Babcock & Wilcox Co (Barberton, Ohio) coal-fired steam generators with Cyclone burners Unit 7 is a 175-MW drum boiler, Unit 8 a 340-MW once-through boiler As with most utility units, excess-air control was achieved by determining O_2 levels at the economizer outlet Since both units are normally run under negative furnace draft air can infiltrate through leaks in the boilers, ductwork, or expansion joints This air in-leakage can result in a bias in the excess-O_2 control circuit giving indication of sufficient O_2 when in fact, the opposite condition may be true

Enough air infiltration can lead to improper air-to-fuel ratios, poor combustion, and corrosive damage if a reducing atmosphere prevails Also, the O_2 probes and analyzers on Units 7 and 8 became increasingly unreliable Repairs to maintain the economizer-outlet system had become excessive and costly The result? The O_2 control system often operated with one or more probes out of service, making it more difficult for the operators to monitor and maintain excess-O_2 levels which led to a lack of confidence in the system

To solve the problem of biased excess-air readings, Nipsco started experimenting with permanently installed high-temperature O_2 probes in the upper furnace of Unit 7 These criteria were established as a basis for the purchase of a new system.

- Low maintenance requirements
- Continuous operation in the furnace section of the boiler.
- Improved probe life, with a one-year minimum desired.

A system that appeared to meet the criteria was a zirconium oxide cell mounted in a silicon carbide tube This type of probe had seen service in the glass and steel industries, but not in US utilities The probe is said to offer several advantages

- High-temperature operation, from 1200F to 2900F
- Fast response.
- No sensor calibration required.
- No heater calibration or failure.

Probe operation. The high-temperature capability of the new O_2 probes allows their permanent installation in an area of the furnace other than the economizer outlet. The high-temperature cell is exposed to a reference gas (instrument air) on one side of the cell, process gas on the other (Fig 1). Zirconia oxide cells behave as solid-state electrolyte at high temperatures in the presence of a catalyst. Under isothermal conditions, and when O_2 partial pressures differ on either side of the cell, an emf inversely proportional to O_2 content in the process gas is developed.

Proper functioning of the zirconia oxide cell is achieved above a minimum recommended temperature of 1100F. Because the old probes (also zirconium oxide cells) had to operate at temperatures of 850F or less at the economizer outlet, a heater assembly and temperature controller were required to maintain cell temperatures greater than 1100F Since heaters aren t required with the new high-temperature probes, calibration requirements are eliminated

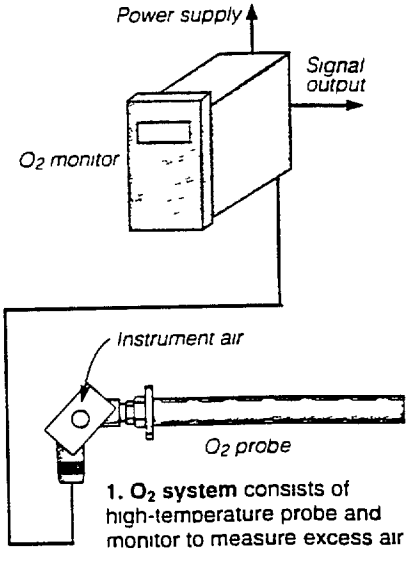

1. O_2 system consists of high-temperature probe and monitor to measure excess air

perature O_2 probes were initially installed in the inspection ports on the front wall of the furnace (Fig 2), with a monitor for each installed at an elevation 88 ft below the probes in the burner-control cabinet room Although performance was satisfactory at first, two months later one of the probes failed, breaking off at a point beyond the inside of the front-wall tubes It was decided that excessive amounts of slag collecting on the probe had caused the failure, rather than stress caused by constant vibration experienced at this location

The next step was to install a probe with a stainless steel protection tube (Fig 3), instead of the standard silicon carbide tube, to see if it could better withstand the extreme conditions in the furnace. After only three days of operation, this probe failed—an excessive amount of slag had accumulated on its tip. The other probe failed after four months of continuous operation The cause again appeared to be from slag.

Since probe performance otherwise was satisfactory, an outer protection tube was added to increase longevity. The longest achievable run with this added protection was only a probe life of three months The outer tube also had an adverse effect on the accuracy of the reading if extreme care was not taken in its installation

Improved location. Obviously, the location of the probes had to be changed. At the front wall of the furnace, operation was completely unpredictable and uncontrollable, rendering the probes unsuitable for use in an automatic control system A location in Unit 7 that could

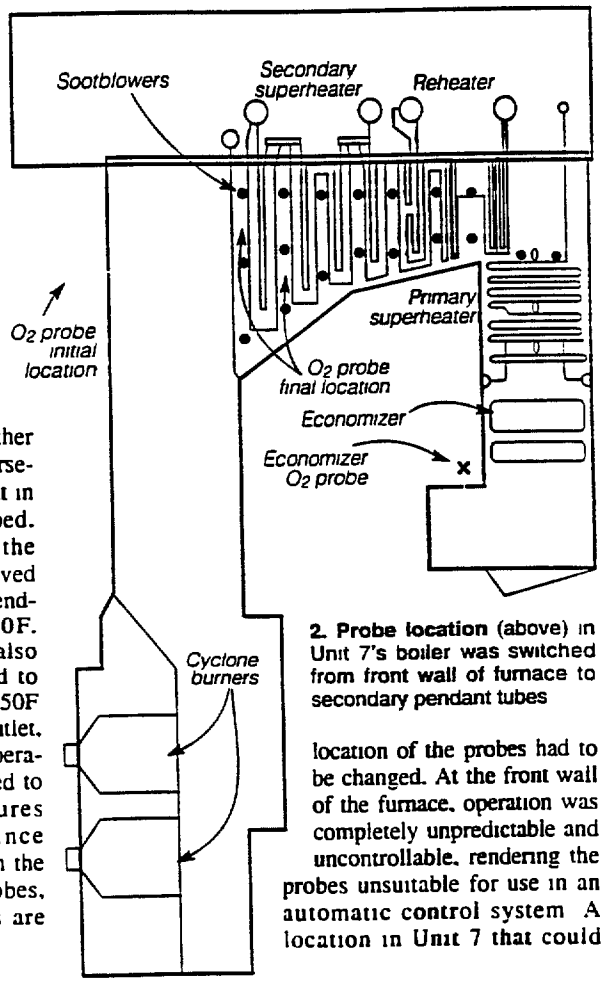

2. Probe location (above) in Unit 7's boiler was switched from front wall of furnace to secondary pendant tubes

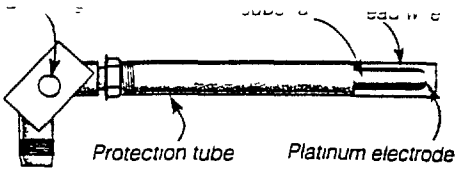

3. Protection tube (right) of stainless steel is aimed at improving probe's ability to withstand extreme furnace conditions

greatly improve the service life of the high-temperature O_2 probes appeared to be in the superheater area of the boiler convection pass Rather than being exposed to harsh environmental conditions in the open area of the furnace, the probes would have maximum protection within the secondary pendant tubes (Fig 2)

Consequently, four O_2 probes were installed in the secondary superheater section of the furnace—two in each sidewall. A potential risk in putting them there was they would be close to the sootblowers. After the probes were in service, the sootblower nearest each probe was operated. It was found that sootblower operation would not damage the probes The O_2 system could now be monitored to evaluate the performance and longevity of the probes

The bottom line. Initial trials on Unit 7's high-temperature O_2 system show that the probes have good potential for application to all [illegible] gained from these trials was put to good advantage when a high-temperature O_2 system for Unit 8 was installed, including four probes in the pendant reheat area of the convection pass After continuous operation for over a year, none of Unit 8's probes have failed.

Results to date have shown differences of O_2 measurement taken at the economizer of 0 4% to 2.5% when compared to the high-temperature probe readings Probe performance has been so successful that the economizer O_2 system will be phased out at Nipsco Also, operator confidence in O_2 measurement of flue gas has been restored.

Tom Elliott

HI-TEMP CARBON AND OXYGEN SENSORS, ELECTRONICS AND ACCESSORIES.

- Simple, Cost Effective Technology
- Integral Thermocouples
- 1600°C (2900°F)
- Industry-Specific Models Available
- Matched Accessories

AACC/Zircoa™

31711 Solon Rd., Solon OH 44139 Tel:(216)349-7220
FAX:(216)248-8864

55

CONTROLOTRON

Models 990DBN
and 990DBP

Universal Dedicated & Portable Dual Path Clamp-On Transit-Time Flowmeters

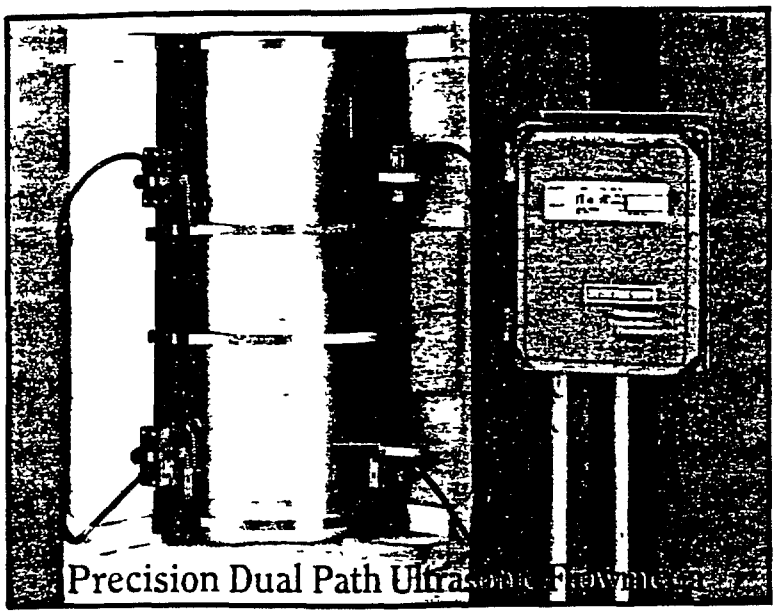

DESCRIPTION

Models 990DBN and 990DBP are precision Dual Path Universal Clamp-On Transit-Time Ultrasonic Flowmeters of NEMA 4X and Portable construction respectively. They are intended for application wherever high accuracy, for either custody transfer or regulatory requirements, is demanded They maintain their high performance even when located close to elbows or other upstream disturbances Both offer field programmability for essentially any pipe size, and operate with essentially any liquid. They replace and outperform most conventional intrusive flowmeters even in their best applications and provide all industry standard analog and digital data outputs, LCD Digital or Graphics display, with integral Datalogger and Stripchart printout

Series 990DB Uniflow measures flow by means of two orthogonal ultrasonic beams, preferably operated in the reflect mode This makes the system extremely resistant to flow profile distortion, crossflow or flow swirl errors, normally caused by upstream bends, gate valves or short straight run conditions Its Clamp-On construction makes it simple to install in existing installations, or as a precision replacement for high maintenance Turbine, Venturi and Wetted Transducer 4 Path Chordal ultrasonic flowmeters.

The 990 Family includes both Dedicated and Portable models Portable models can be used to quickly evaluate the performance which will be provided by the Dedicated models Dedicated NEMA 4X 990DB models are suitable for operation in almost any environment, indoors or outdoors, and at pipe temperatures up to 500°F

FUNCTIONS

Series 990D offers the following optional functions

- Industry Standard Analog and Digital Data Outputs
- Digital Flow Rate and Total Display
- Graphics Display with Stripchart and Datalogger
- RS-232 Serial I/O Data/Command Communication
- Field Programmable Status Alarms Relay Outputs
- Memorized Flow, Site and Diagnostic Data Printout

FEATURES

- Universal Applicability
- Outperforms Conventional Intrusive Flowmeters
- Lower Cost/Higher Reliability than Intrusive Flowmeters
- User Friendly Menu Driven Field Programmable Site Setup
- Non-Intrusive Universal Clamp-On Transducers
- MultiPulse® Transmission
- No Cutting of Pipe Ever Required
- Batch and Sampling Capability Built In
- Calibratable to 1/4% of Flow Rate
- Bi-Directional Flow Measurement

56

WHAT IT DOES

Models 990DBN and 990DBP measure the flow of most liquids in most pipes between 6 and 360 inch diameter, and with flow rates of ±40 ft/sec, and temperatures up to 500°F They are intended as high performance replacements for Turbine, Venturi and 4 Path Wetted Chordal ultrasonic flowmeters

HOW IT WORKS

System 990DB Dual Path transducers operate in Reflect mode to prevent crossflow error Orthogonal transducer path orientation prevents error due to distorted flow profile

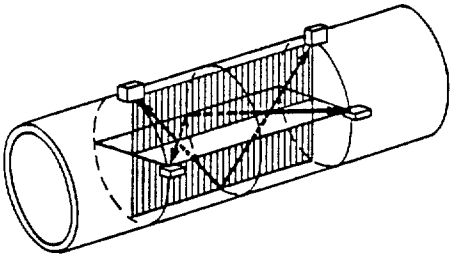

WHERE TO USE

Series 990DB is intended for high precision or custody transfer applications of petroleum products, chemicals or water Dual orthogonal path Reflect Mode operation, equivalent to 4 paths, is highly resistant to distorted flow profile, crossflow and swirl conditions This makes 990DBN ideal for Nuclear Feedwater, Interstate Oil Pipeline, Hydro-Power Turbine and Irrigation Turnout flow measurement applications The 990DBP is functionally identical to the NEMA 4X 990DBN Portability facilitates use as a test device, or in applications which do not require continuous flow measurement

SPECIFICATIONS

APPLICABILITY

LIQUIDS: Any sonically conductive homogeneous fluid
LIQUID (PIPE) TEMPERATURE. −40°F to +250°F Standard
−80°F to +500°F Optional
PIPE SIZES: 6 to 360 inches OD
PIPE MATERIAL: Any sonically conductive pipe material Metal, Glass, Plastic, etc
PIPE WALL THICKNESS. 0 05 to 3 00 inches
LINER MATERIAL: Any sonically conductive material Glass, Plastic, Cement, etc , intimately bonded to the pipe interior
LINER THICKNESS: Up to 1 inch, dependent on material
FLOW VELOCITY RANGE: ±40 fps, min , dependent on pipe OD and mounting track type

991 CLAMP-ON TRANSDUCERS

PIPE SIZE RATINGS
- Group 3. 6 to 24 inches, OD
- Group 4 20 to 48 inches, OD
- Group 5. 36 to 360 inches, OD

RATING. Intrinsically safe. Radiation Resistant and Submersible available
CONSTRUCTION: Aluminum, stainless steel and special alloy or plastic.
CONNECTORS: Conduit for NEMA 4, BNC for Portable

992 MOUNTING TRACKS

- Available in Direct or Reflective Mounting for all transducer sizes in standard pipe diameter ranges.
- PinStop transducer spacing standard for all models

994 FLOW COMPUTER

- POWER: 20 W, 9 to 36 VDC or internal Battery, 100/115 or 230 VAC, 1ϕ
- TEMPERATURE: −5°F to +115°F (except for Graphics Models)
- SIZE: 10.5"W, 9" D, 13" H
- WEIGHT: 12.8 pounds
- RATING. Intrinsically safe, NEMA 4X with cover closed
- MODULES: Plug-In, Interchangeable W/O special tools
- RANGES: Size 4: Transducer Sizes 3 and 4
  Size 5: Transducer Sizes 3, 4 and 5

994 PERFORMANCE (Standard Conditions)*

- SENSITIVITY: 0.001 fps at any flow rate including zero
- LINEARITY: 0.003 fps
- RESPONSE BANDWIDTH: 10 Hz (settable)
- SLEW RATE: 20 ft/sec/sec
- FLOW PROFILE COMPENSATION. Via liquid viscosity entry
- ZERO DRIFT STABILITY: 0.005 fps for transducer sizes 3 to 6

995 HAND HELD CONTROL/DISPLAY TERMINAL

- 2 Row 32 character Liquid Crystal Display
- 30 Keys, Numeric or Function identified.

* Submit Application Information Form for estimate of performance under specific application conditions.

HOW TO ORDER & SPECIFY SERIES 990DB

Selecting the most appropriate model and optional functions and features, offered in System 990DB, is quite simple, especially if you follow the procedure below However, feel free to call on your local Controlotron representative for assistance if needed

The Uniflow part numbering system is a guide to the process of selecting your preferred model, as well as producing the part numbers of all the system components The procedure below, gives you an opportunity to consider the many Uniflow system options offered Check with your local Controlotron representative to assure selection of compatible Dedicated model functions Note, however, that standard Portable Uniflow Systems are supplied fully loaded, with all available functions and features.

System 990 Dedicated Models use a "Building Block" System This permits you to order only those functions that you actually need for your application, so as to keep your costs as low as possible If, at a later time, a new function is required, most can be added merely by plug-in of the desired Function Module into a compatible 994 Flow Computer

Uniflow Systems include the following Components:

- **Series 991 Transducers**
- **Series 992 Transducer Accessories**
- **Series 994 Flow Computer and Function Modules**
- **Series 995 Hand-Held Control Display Unit**
- **Series 996 Remote Accessories**

Specifying and ordering System 990 Uniflow equipment involves the following steps

1 Specify the Components of your selected system, choosing the component options which contain your desired features
2. Specify the desired optional plug-in Function Modules and/or Remote Accessories by part number below
3 Obtain the price and delivery of your selected components, and place your order with Controlotron either through your local Representative or Factory Direct

Listed below are the part numbers for all Uniflow system components To construct the component part number which has your desired options replace the part number LETTERS with the appropriate CODE symbols listed below

991ABC-D TRANSDUCER	**A=MODEL** N=NEMA 4	**B=TYPE** M=Metal Body P=Plastic Body V=Sonic Velocity	**C=TEMPERATURE** S=250°F max. H=375°F max. VH=500°F max *	**D=SIZE** 3=6" to 24" pipe OD 4=20" to 48" pipe OD 5=36" to 360" pipe OD			
992MTABCD-E MOUNTING TRACK	**A=MODEL** N=NEMA 4	**B=TYPE** D=Direct Beam R=Reflect Beam	**C=STYLE** M=Metal XDCR P=Plastic XDCR	**D=MATERIAL** A=Aluminum S=Steel SH=For VH XDRS	**E=PIPE OD RANGE (min.)*** 3=6" to 24" pipe OD 5X=6' to 10' pipe OD 4=20" to 48" pipe OD 5Y=10' to 18' pipe OD 5=36" to 84" pipe OD 5Z=18' to 30' pipe OD * See 990SLECT Manual		
992CAB-C TRANSDUCER CABLE	**A=MODEL** N=NEMA 4	**B=ENVIRONMENT** S=Standard Temp W=Submersible Kit	**C=LENGTH** C=Length in ft.	**992MTM-A MAGNETIC TRACK MOUNT KIT**	**A=PIPE OD RANGE** 4=20" to 48" pipe OD 5=48" to 216" pipe OD 6=18' to 30' pipe OD		
993ABC APPLICATION FUNCTION AND CONTROL MODULE	**A=MODEL** C=Control Only Module M=Memory and Control Module		**B,C=CODES RESERVED**				
994ABCD-EF FLOW COMPUTER	**A=MODEL** DBN=NEMA 4X DBP=Portable	**B=PIPE OD RANGE** 4=6" to 48" 5=6" to 216" 6=6" to 360"	**C=DISPLAY** B=Blind G=Graphics D=Digital GL=Lighted Graphics	**D=POWER SOURCE** S=100/115 VAC M=230 VAC B=9 to 36 VDC SB=115 VAC + Battery MB=230 VAC + Battery	**E=PROGRAM LOAD** 1=Basic Data 2=Add RS-232 & Datalog 3=Add Graphics + Stripchart	**F=SPECIAL** N(n)=CC Nuclear Grade S(n)=Intrinsically Safe	
994-7 ANALOG COMPUTER	Provides Programmable Isolated 4 to 20 mA 0 to 10 VDC and Pulse Rate Outputs, one required per channel						
994-10ABC ALARM RELAY MODULE	**A=MODEL** N=NEMA 4	**B=TYPE** A=Normally Open B=Normally Closed	**C=RATING** D=Dry Reed (10 VA max) M=Mercury Wetted (50 VA max) (Not available in Portable Units or in NC' Type)				
994-11ABC LCD DISPLAY COMPUTER	**A=MODEL** D=Digital Display G=Graphics Display	**B=TYPE** D=Dual Path	**C=CODE RESERVED**				
994-12ABC RS-232 I/O MODULE	**A=MODEL** T=995 Hand Held Terminal Driver Only S=RS-232 and 995 Drivers		**B,C=CODES RESERVED**				

995T HAND-HELD CDU TERMINAL	**996P PRINTER**	**996P-5 PRINTER PAPER, 5 PACK REFILLS**	**996PSP-A PIPE SIMULATOR**	**A=XDCR SIZE** A=0 1 2 3 or 4	**996DABC REMOTE DISPLAY**	**A=TYPE** D=Digital	**B=MODEL** N=NEMA 4X P=Panel Mount	**C=POWER SOURCE** S=110/115 VAC M=230 VAC

* Transducers operated above 400°F will require periodic refurbishment, with periodicity proportional to operating temperature For extreme temperature operation, factory consultation is recommended

TYPICAL SPECIFICATIONS

The flowmeter furnished shall be the Controlotron System 990DB Uniflow Clamp-On Dual Path Transit-Time Ultrasonic type, or approved equivalent, and shall contain the features listed below

- MultiPulse™ Flow Detection
- TransX™ Ultrasonic Transmission Optimization
- Metallic Mode Conversion Wide Beam Transducers
- Made in USA
- PinStop Universal Mounting Track (no ruler scales)
- 64 × 256 Pixel Graphics Display
- Programmable Stripchart Option for Flow, Liquid Data
- Programmable 64K Memory Datalogger Option
- All Modules Plug-In, including Power Supply
- Numeric Entry Only. Hand-Held Programming
- Full Diagnostic Data Access
- Plug-In Function Options
  - Analog Data 0 to 10 VDC & Isolated 4 to 20 mA
  - Alarm Relay Module 8 Programmable Relays
  - Digital and Graphics Display Computer/Driver
  - RS-232 Serial Data I/O, Selectable Baud Rates
- Intrinsically Safe Construction
- Reflect or Direct Transmission Mode
- Simultaneous Individual Beam & Summed Data Display

A WORD ABOUT CONTROLOTRON

Controlotron, completing its third decade of operation, specializes in the manufacture of proprietary instruments for the measurement and control of liquids All Controlotron products are derived from Company sponsored research and development programs, the heart of our continued ability to provide new and unique instruments of outstanding value and performance characteristics, such as

Portable System 990 UNIFLOW
MultiPulse™ Transit-Time Flowmeter

Dedicated System 990.
MultiPulse™ Transit-Time Flowmeter

Portable System 190 Spectra:
Portable Fourier Flowmeter

Dedicated System 190 Spectra·
NEMA 4X Fourier Flowmeter

Portable 990E
Thermal Energy Flowmeter

Dedicated 990E
Thermal Energy Flowmeter

Your Local Representative

RENTAL/ PURCHASE PLAN

Users who wish to familiarize themselves with Models 990DBN and 990DBP prior to purchase may avail themselves of Rental plans (where available) Advance purchase of the 990DB Field Manual will provide detailed information beyond this brochure.

CUSTOMER SERVICE

Users of Controlotron instruments enjoy the benefit of worldwide customer service organizations, available on short notice for training, application, installation, demonstration, and maintenance services. Contact us or your local representative for details on these services.

2 YEAR WARRANTY

System 990 carries a limited 2 year warranty, from date of shipment, against intrinsic defects

CONTROLOTRON

155 Plant Avenue, Hauppauge, New York 11788 Phone (516) 231-3600 • Fax. (516) 231-3334 • Telex 961-447

High Performance. Low Maintenance. Lower Costs.

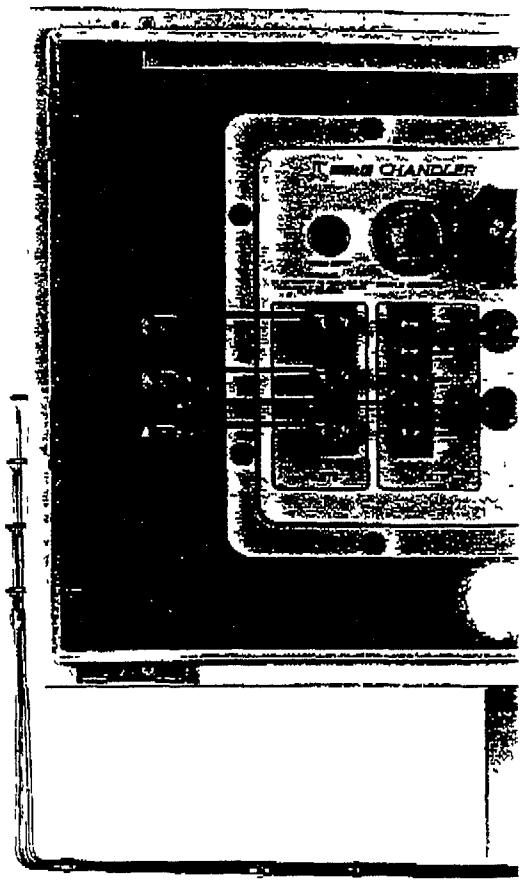

For years, the natural gas industry has needed a more reliable, field-ready on-line BTU Analyzer. One that would be easier to install, easier to operate, and easier to maintain. With true, bidirectional communications for remote control and troubleshooting. And lower costs.

Today, EG&G Chandler — a Fortune 200 company and one of the most trusted names in oil and gas equipment for over 45 years — has met the need.

The Model 2920 On-Line BTU Analyzer.

The Model 2920 BTU Analyzer System is a stand-alone gas chromatograph designed to measure the heating value of up to six natural gas streams.

Built to withstand harsh environmental conditions, it delivers the repeatability and accuracy of a laboratory gas chromatograph

Easy, On-Site, One-Site Installation.

Unlike other on-line systems, the Model 2920 System is installed on-site in a single meter house. Electronics, the chromatograph and the stream selector are all located in one structure This makes routine maintenance easier — and dramatically reduces installation costs.

Factory Mutual System

It takes only hours — not days — to put the Model 2920 System into operation, delivery to on-line analysis.

The analyzer and related options are FM-approved for use in Class I, Division 2, Groups C & D environments, with operating temperatures from -25° to 45°C (-10° to 110°F).

Flexible, Modular Design.

The Model 2920 System was designed for easy installation and maintenance.

The system consists of two compact, self-contained modules housed in rugged NEMA-4 cases. One module contains the gas chromatograph and the twin, on-board computers that run analysis operations and communications. The other module contains the stream selection unit, valving for automated gas calibration, and alarm relays.

The result? An on-line BTU Analyzer you can easily configure to match available space. The system's modular components also allow fast, easy field-repairs, for minimum downtime.

ISO 9001 CERTIFIED

No Learning Curve.

Some systems are so complicated, it takes hours of training and service-support to put them to work.

The Model 2920 System does away with the learning curve. The menu-driven operating system is so user-friendly, even an untrained layman can learn to run it — in minutes.

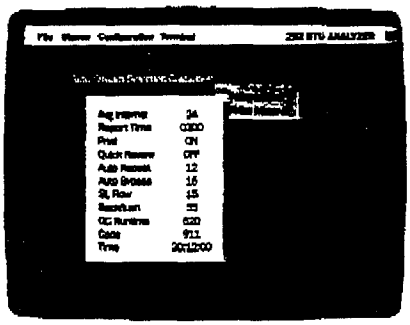

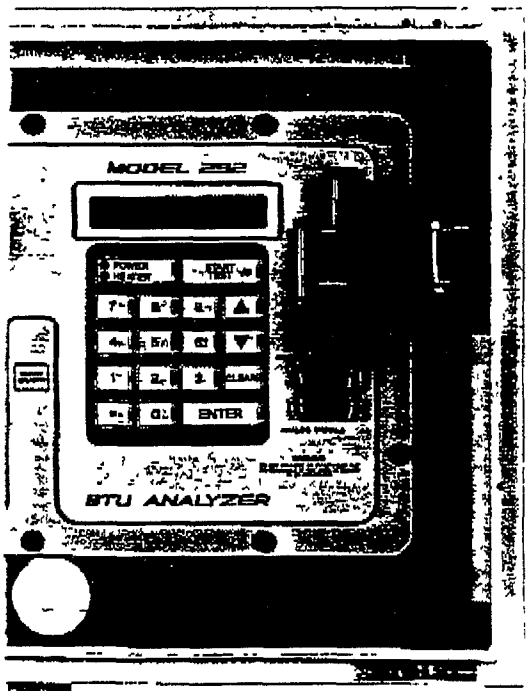

Easy To Install. Easy To Use. Easy To Maintain.

- Flexible, One-Site, One-Structure Installation For All Components Competitor's Components must be separated.
- FM-Approved For Class I, Division 2, Groups C& D Environments.
- Dual, On-Board Computers For Simultaneous Operation & Communications.
- Remote Communications, Diagnostics & Control.
- Up To Six Natural Gas Streams.
- Accuracy Unsurpassed In The Industry.
- Repeatability Better Than ±0.5 BTU/ 1000 BTU.
- Automatic Calibration.
- Automatic Restart After Power Outages.
- Built-In Data Protection.
- Easy Maintenance Modular Design
- Built-In Diagnostics.
- Parallel Port For Standard Printer.
- PC-Based Remote Control; Easy Interface With Industry Standard Communication Software.
- Compliance With Industry Standards: GPA, ASTM, ISO, AGA.

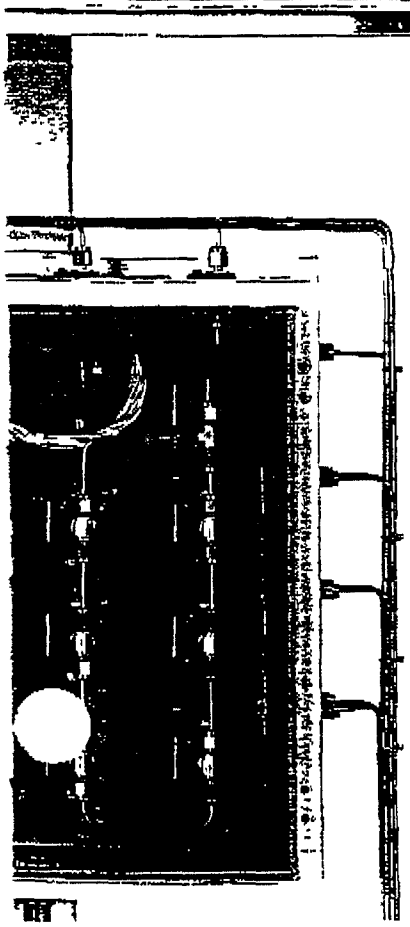

Total Off-Site Communications & Control.

Communicating with the Model 2920 System is as easy as dialing your phone. Using any computer and a standard modem, you have immediate access to all system functions and reports.

Monitor operations. Modify configuration or operating parameters. Run diagnostic tests. All from your office, home, lab, or hotel room. Even while the machine is performing an analysis.

The benefits are obvious. No more long drives to sites to modify programs or verify that your system is working properly. With the Model 2920 System, anything you can do at the unit's keypad you can also do via modem.

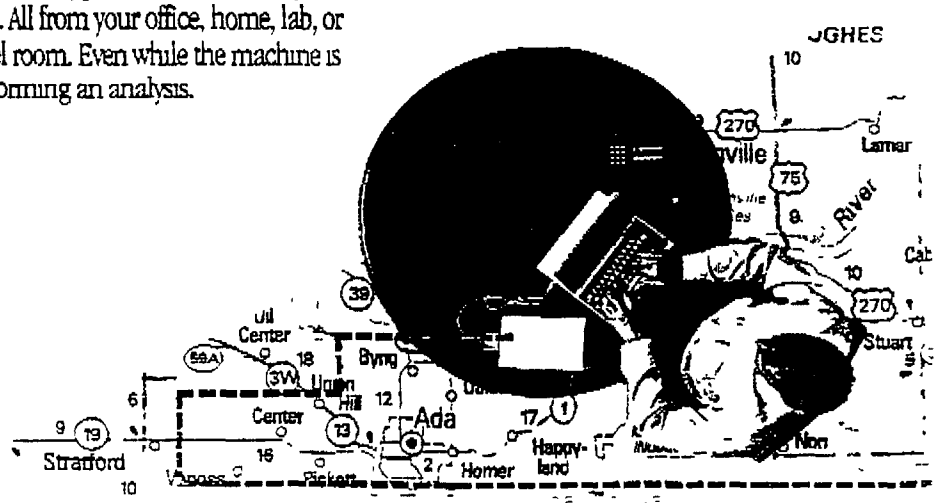

61

Easy Operation.

With the Model 2920 System, a simple menu guides the user through every operation step-by-step — prompting the operator for information to configure parameters for gas analysis, calibration, data retrieval, and diagnostics.

- Sampling time can be set or adjusted quickly and easily
- SI (kJ/m³) units or English units (BTU/Scf) are simply selected from the menu
- Samples are automatically purged between analyses
- Calibration is quick — and automatic.
- Data are password-protected to prevent tampering.

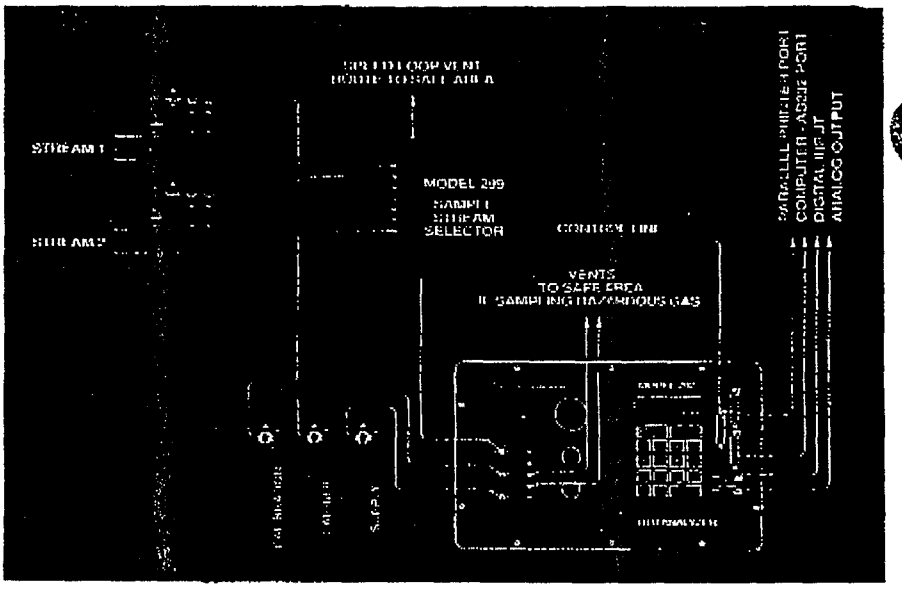

Proven Performance.

The Model 2920 System uses field-proven technologies and industry-standard gas chromatographic techniques. And it's been performance-tested in a variety of real-world applications.

With some systems, you have to wait until analyses are completed before you can communicate with the remote unit. With the Model 2920 System, you have uninterrupted access to data and controls, even during analysis. That's because the Model 2920 uses not one but two powerful, on-board computers. While one computer performs analyses, the other handles communications.

Advanced, built-in programming allows the unit to calculate heating value, relative density, and compressibility via the AGA 8 method. The system also analyzes composition with exceptional accuracy.

Oven temperature is precisely controlled to within ±0.01°C, eliminating errors caused by ambient temperature fluctuations. Analysis repeatability is better than ±0.5 BTU / 1000 BTU.

Our standard columns have an expected life span of 10 years. The proprietary manufacturing process ensures that the instrument will maintain superior test repeatability and accuracy over its entire service life.

A Thermal Conductivity Detector (TCD) gives you extremely high sensitivity to low concentrations of components.

For protection from harsh field conditions, all Model 2920 System components are encased in a rugged, weather-proof and moisture-resistant NEMA 4 package.

Value-Extra Features.

The Model 2920 System was designed and built to deliver more for your money. To meet that objective, we've included a long list of hardworking, easy-to-use extra features.

These features include *Automatic Calibration* at user-defined intervals, *Automatic Shutdown and Restart for Power Failures*, with built-in Data Protection, and eight programmable *High/Low Signal alarms*.

Best of all, the Model 2920 System can eliminate the "hidden costs" of other on-line systems — for training, multi-structure installation, programming, support, and other items that don't show up in the quoted price.

Dollar for dollar, feature for feature, no other BTU Analyzer even comes close, in performance, ease of use, or value.

Don't Pay More For Less.

For a complete demonstration of Model 2920 System capabilities, simply give us a call

EG&G INSTRUMENTS CHANDLER

P O Box 470710 • Tulsa, Oklahoma, U.S.A. 74147-0710
Telephone: (918) 250-7200 • FAX (918) 459-7199 • TELEX 205843

62

Specifications.

ENVIRONMENTAL REQUIREMENTS:

- Operating Temperature Range: -25° to 45°C (-10° to 110°F)
- Environmental Rating: Approved by Factory Mutual Research Co. for use in Class I, Division 2, Groups C & D locations.
- NEMA 4 enclosure

INTERFACE SPECIFICATIONS:

- Printer: Parallel/Centronics
- Computer: RS232C (DTE), 2400 Baud. 8 data bits, no parity, 1 stop bit

ANALOG OUTPUT SPECIFICATIONS.

- The analog output for a chart recorder is 0-10 Vdc, 1000 OHMS source impedance.

PRINTER SPECIFICATIONS:

- Printer: Epson 9-pin or equivalent with parallel (Centronics) interface

POWER REQUIREMENTS:

- Power: 110 or 220 Volts ±10%, 50/60 Hz, 250 VA max., 40 W operating

GAS REQUIREMENTS:

- Carrier Gas: Helium (Zero Grade, 99.995% pure)

  Pressure: 1035 kPa (150 psig)

  Connection: Stainless steel tubing provided with the analyzer. Flexible plastic tubing is NOT recommended.
- Supply Gas: Dry Instrument Air, Nitrogen or other inert gas (Instrument grade)

  Pressure: 520 kPa (75 psig)

  Connection: Hose provided with analyzer or other clean tubing rated for the pressure.
- Sample Gas: Analyzes dry pipeline quality natural gas that contains: nitrogen, methane, carbon dioxide, ethane, propane, i-butane, n-butane, i-pentane, neo-pentane, n-pentane, C_6 and heavier components

  Maximum inlet pressure: 21 MPa (3000 psig)

  Minimum inlet pressure: approximately 3.5 kPa (0.50 psig)

  Connection: Stainless steel tubing provided with the analyzer or other tubing rated for the pressure.

EG&G Instruments Chandler / Model 292 BTU Analyzer

Test time. Mar 10 93 18.11 — Calibration # 3
Test #: 165 — Stream #: 1 — Location No. 930308

	Standard / Dry Analysis				Saturated / Wet Analysis		
	Mole%	BTU*	R.Den.*	GPM**	Mole%	BTU*	R.Den*
Methane	95.027	962.02	0.5264	-	93.373	945.28	0.5172
Ethane	2.420	42.92	0.0251	0.6471	2.378	42.17	0.0247
Propane	0.667	16.83	0.0102	0.1839	0.656	16.53	0.0100
i-Butane	0.160	5.21	0.0032	0.0523	0.157	5.12	0.0032
n-Butane	0.134	4.37	0.0027	0.0421	0.131	4.29	0.0026
i-Pentane	0.051	2.03	0.0013	0.0185	0.050	1.99	0.0012
n-Pentane	0.023	0.93	0.0006	0.0084	0.023	0.91	0.0006
(C_6+)	0.079	3.99	0.0025	0.0339	0.077	3.92	0.0025
Moisture	0.000	0.00	0.0000	-	1.740	0.88	0.0108
Nitrogen	0.371	0.00	0.0036	-	0.365	0.00	0.0035
(CO_2)	1.070	0.00	0.0163	-	1.051	0.00	0.0160
Total	100.00	1038.3	0.5917	0.9861	100.00	1021.1	0.5922

** Uncorrected for compressibility at 60 0F & 14.730PSIA.*
*** Liquid Volume reported at 60 0F*

		Standard / Dry Analysis	Saturated / Wet Analysis
Molar Mass	=	17.138	17.153
Relative Density	=	0.5929	0.5934
Compressibility Factor	=	0.9978	0.9977
Heating Value	=	22938. BTU/lb	22538. BTU/lb
Heating Value	=	1040.6 BTU/CF	1023.5 BTU/lb
Absolute Gas Density	=	45.3666 lbm/1000CF	45.4117 lbm/1000CF

Unnormalized Total: 100.038
Last Calibrated with Calgas of 1050.3 BTU/CF Mar. 10 93 16:31
C_6+ Last Update: Mar. 02 93 14:11
C_6+ BTU/CF 5065.8, C_6+ lbm/Gal 5.6425, and C_6+ Mol Wt. 92.00.

▲ *Typical BTU Analysis Report*

EG&G INSTRUMENTS CHANDLER

P.O. Box 470710 • Tulsa, Oklahoma, U.S.A. 74147-0710
Telephone (918) 250-7200 • FAX: (918) 459-7199 • TELEX 205843

ISO 9001 CERTIFIED

The Model 292 can also be configured for use at a stationary location. Ask for our brochure on the Model 2920 System for Stationary Applications.

Data Storage and Recall

The Model 292 has a storage capacity that holds data from as many as 64 analyses. The stored data are compiled into a report and filed by location number (sample site), which you enter on the keypad. When an operator enters a previously-used location number, the panel display indicates previous analyses stored under that number. This gives the operator instant access to a complete history of all data taken at that site.

The stored reports can be transferred to a printer or transferred to a computer at any time. Transferring the reports to a computer requires an accessory communication driver software package such as Procomm® and a modem in the computer.

Calibration

The Model 292 Portable BTU Analyzer is fully-calibrated when it leaves the factory. An operator can recalibrate the unit periodically to verify its superior repeatability. This is easy to accomplish using calibration gas, the keypad, and calibration software that is programmed into the unit. If no other calibration data are entered, the Model 292 will default to the original input provided at the factory. The date and heating value of the calibrated gas will be printed automatically on each analysis report. A calibration report can be re-printed at any time.

Equipment Supplied with Each Instrument

- Set of computer cables
- Two 10 ft by 1/8" OD flexible SS tubes, for carrier and sample gas.
- One 8 ft by 3/16" ID black nylon hose for supply gas.
- Operation Manual
- Factory Calibration Specs.

Specifications

Gas Inputs

Carrier Gas: 99.995% Helium, 1034 kPa (150 psig)

Supply Gas for Switching Valve: Nitrogen, Helium, or Instrument Air, 552 kPa (80 psig)

Connectors

Parallel Printer: Epson-compatible dot matrix printer

Computer RS232C: for serial communication (DTE) - typically through a modem

Analog Output: 0-10 VDC signal for plotting Chromatogram

System Interface: Digital I/O for use only with our Model 2920 System for Stationary Applications; RS232 serial communication (DTE)

Signal Input: Reserved for future system applications

Displayed Results

Compositional Analysis (mole %)

Heating Value;

kJ/m^3 (Btu/SCF) - Standard and Saturated

kJ/kg (Btu/lb mass) - Standard and Saturated

Compressibility Factor

Relative density

Absolute gas density, kg/m^3 (lb mass/1000 SCF)

Repeatability

Within ±1.0 Btu/1000 SCF

Voltage Requirements

120 VAC ±10% 50/60 Hz,
or
220 VAC ±10% 50/60 Hz

Can be operated with an Inverter from 12 VDC (see Inverter in Accessories)

External Tube Connections

Three Inlets: 1/8" NPT (female).

Five Vents: 1/16" tube.

(See Accessories for metric adapters)

Specifications (continued)

H_2S

The unit can operate with gas streams that contain H_2S without excessive degradation. The minimum detectable limit for H_2S is 2500 ppm.

Electrical Classification

Approved by FM (Factory Mutual) for Class 1, Division 2, Groups C & D specifications

Weights and Dimensions

Net Weight: 14 kg (30 lb)

Cabinet Dimensions:
46 x 28 x 48 cm
(18 x 11 x 19 in.)

Shipping Weight: 25 kg (55 lbs)

Shipping Dimensions:
58 x 58 x 56 cm
(23 x 23 x 22 in.)

Ordering Information

Model 292-20 BTU Analyzer, 120 VAC or 220 VAC (specify voltage when ordering). Complete with all the equipment listed. Order accessories from the following list.

Accessories

Inverter to provide operating power from a truck or auto battery:
Part #300-27404,
12VDC to 120VAC.
Part #300-28656,
12VDC to 220VAC.

Transmitter
Model 298 Four-Channel 4-20 mA Current Transmitter. Permits the transfer of any 4 of 43 parameters measured during a test (such as Heating Value, %N_2, %CO_2, %CH_4, Relative Density, etc.) to an external recording or storage device.

Portable Bottle Option
Model 292-400. Includes two regulators, gauges, bracket, carrying case, and two DOT-Approved aluminum bottles with a capacity of 195 liters (6.9 cubic feet)

APPENDIX B

Audit Records

SIMFEROPOL	STEAM POWER BOILER			
OXYGEN LEVELS	CONVECTION PASS 300° AIR TEMP		AT I.D. FAN 30°C ATEMP	
TIME / DATE	12:29:36 02/22/95	12:33:16 02/22/95	12:58:04 02/22/95	13:18:04 02/22/95
FUEL NATURAL GAS:21870 BTU/LB	1R	1L	1R	1R
COMBUSTION EFFICIENCY:	84.9 %	84.4 %	83.6 %	83.7 %
AMBIENT TEMPERATURE:	23 °C	24 °C	22 °C	17 °C
STACK TEMPERATURE:	399 °C	421 °C	138 °C	141 °C
OXYGEN: O_2 3-4	07.4 %	05.0 %	08.2 %	07.4 %
CARBON MONOXIDE:	7 MGM	4 MGM	0 MGM	7 MGM
CARBON DIOXIDE: 11.7 MAX	07.7 %	09.0 %	07.2 %	07.6 %
COMBUSTIBLE GASES:	0.00 %	0.00 %	0.00 %	0.00 %
STACK DRAFT (INCHES H20):	- 1.9	- .9	- 6.6	- 4.0
EXCESS AIR: 7-10-12	48 %	28 %	57 %	49 %
OXIDES of NITROGEN:	187 MGM	217 MGM	167 MGM	88 MGM
SULFUR DIOXIDE:	0 MGM	0 MGM	0 MGM	0 MGM
CARBON MONOXIDE ALARM:	1990 PPM	1990 PPM	1990 PPM	1990 PPM
MODE:MGM OXY_REF :TRUE% CALIBRATED JAN 1995	AVE O_2 ANALYZER = 4.5		AVE O_2 ANALYZER = 2.5	

160 TONNES/HR = 352,640 LBS/HR STEAM

110 ATM = 1595 PSI

540°C = 1004°F STEAM h_s = 1487 BTU/LB

196°C = 385°F FEEDWATER h_f = 354 BTU/LB

SIMFEROPOL	HOT WATER BOILER			
OXYGEN LEVELS	AT I.D. FANS 30°C AIR TEMP			
	BOILER BASE LOAD		REDUCE EXCESS AIR	
TIME:	09:56:27	10:00:27	10:12:39	10:08:30
DATE:	02/23/95	02/23/95	02/23/95	02/23/95
FUEL NATURAL GAS:21870 BTU/LB	2R	2L	2R	2L
~~COMBUSTION EFFICIENCY:~~	~~95.7 %~~	~~94.8 %~~	~~93.4 %~~	~~91.7 %~~
AMBIENT TEMPERATURE:	17 °C	18 °C	19 °C	19 °C
STACK TEMPERATURE:	21 °C	24 °C	30 °C	40 °C
OXYGEN:	05.8 %	05.9 %	04.4 %	04.1 %
CARBON MONOXIDE:	6 MGM	27 MGM	66 MGM	118 MGM
CARBON DIOXIDE:	08.5 %	08.5 %	09.3 %	09.5 %
COMBUSTIBLE GASES:	0.00 %	0.00 %	0.03 %	0.04 %
STACK DRAFT (INCHES H20):	- 2.9	- 2.8	- 2.1	- 2.1
EXCESS AIR:	34 %	35 %	24 %	22 %
OXIDES of NITROGEN:	109 MGM	99 MGM	103 MGM	94 MGM
SULFUR DIOXIDE:	0 MGM	0 MGM	0 MGM	0 MGM
CARBON MONOXIDE ALARM:	1990 PPM	1990 PPM	1990 PPM	1990 PPM

MODE:MGM OXY_REF=TRUE%

$100\ Gcal/HR \times 3.9685 \times 10^6 = 396,850,000\ BTUH$

SIMFEROPOL - POWER PLANT STAFF

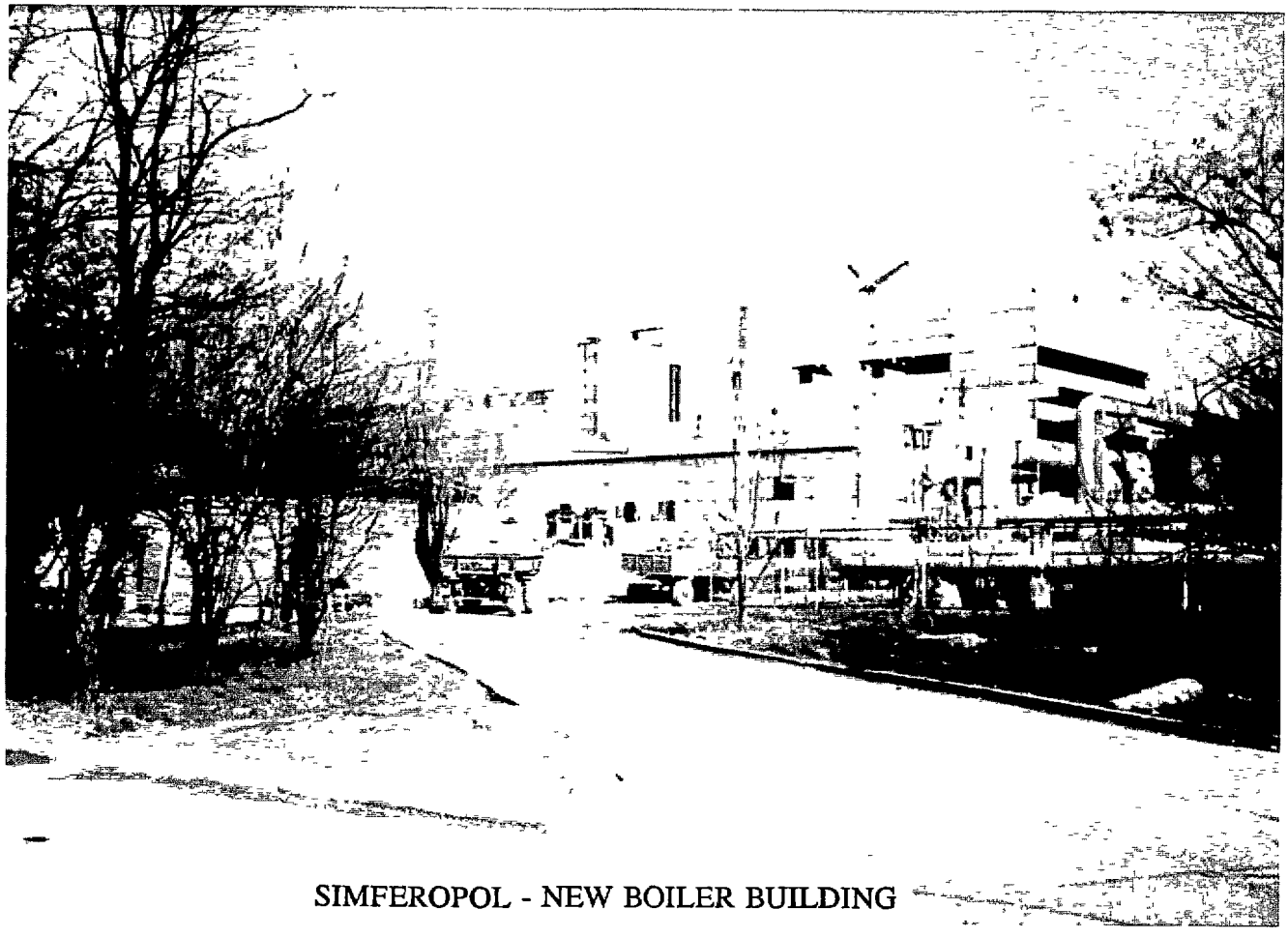

SIMFEROPOL - NEW BOILER BUILDING

SIMFEROPOL - NATURAL DRAFT COOLING TOWERS

SIMFEROPOL - TURBINE-GENERATORS

SIMFEROPOL POWER PLANT

BOILER COMBUSTION EFFICIENCY TEST

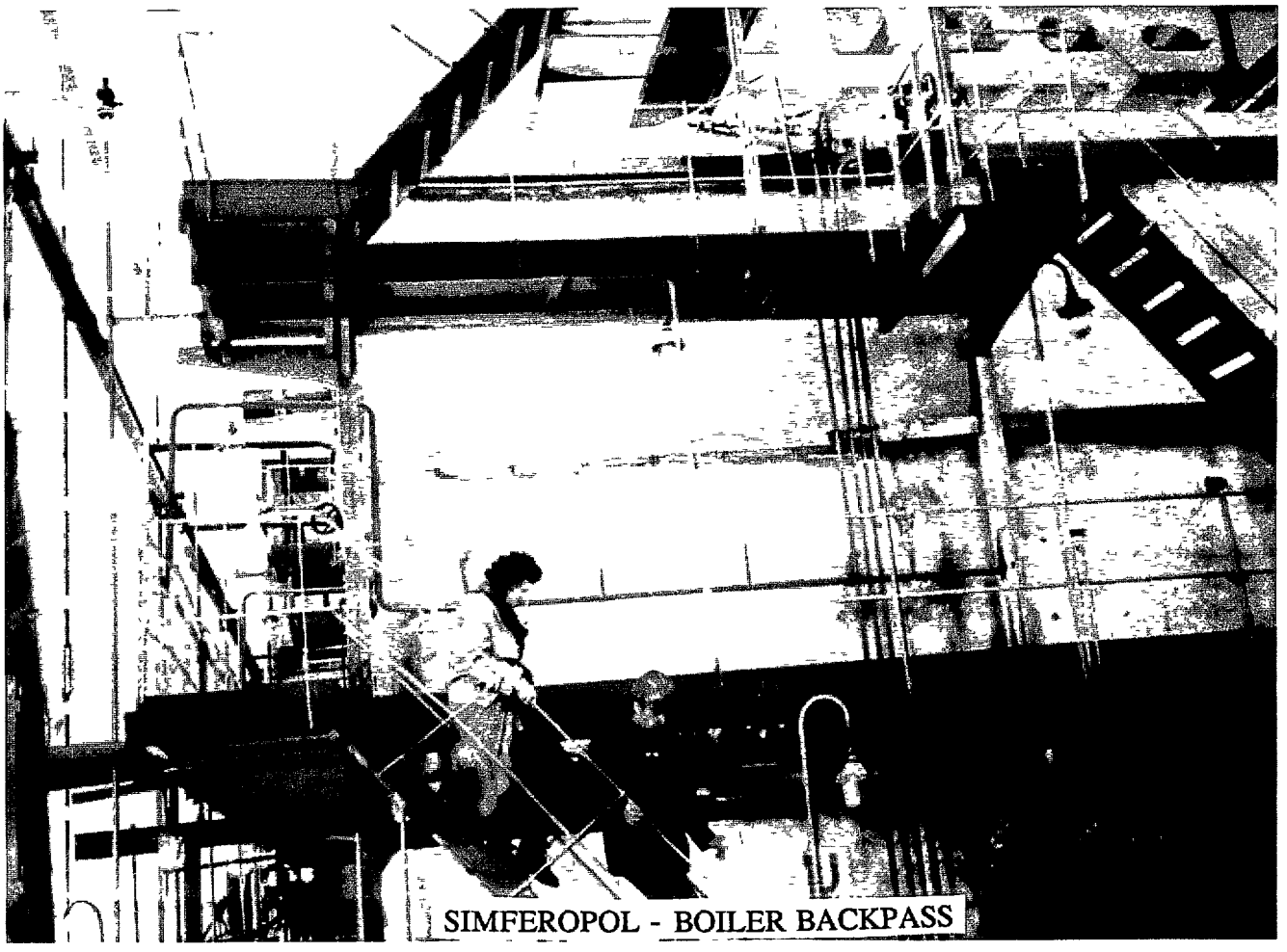

SIMFEROPOL - BOILER BACKPASS

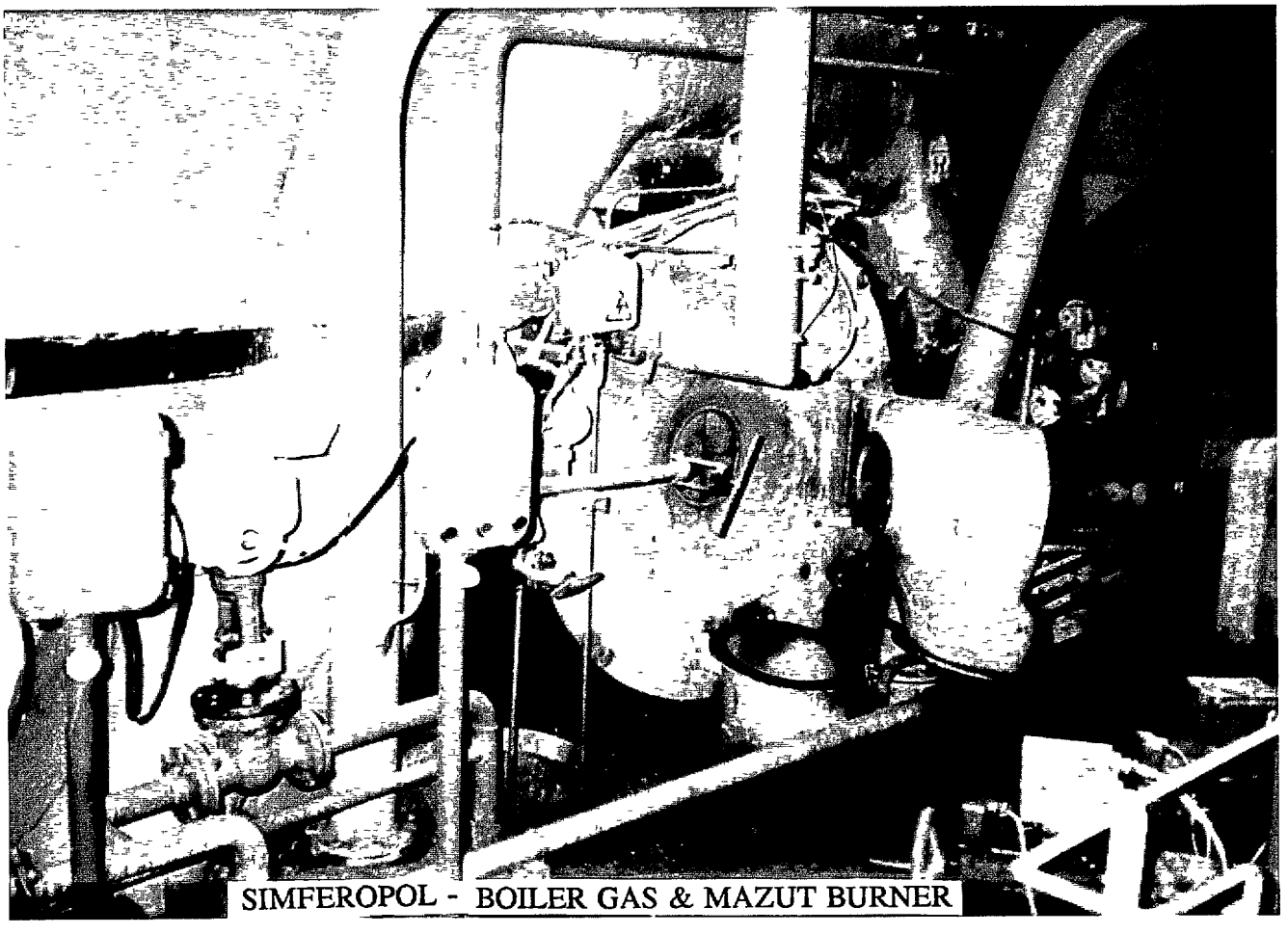

SIMFEROPOL - BOILER GAS & MAZUT BURNER

APPENDIX C

Power Plant Data

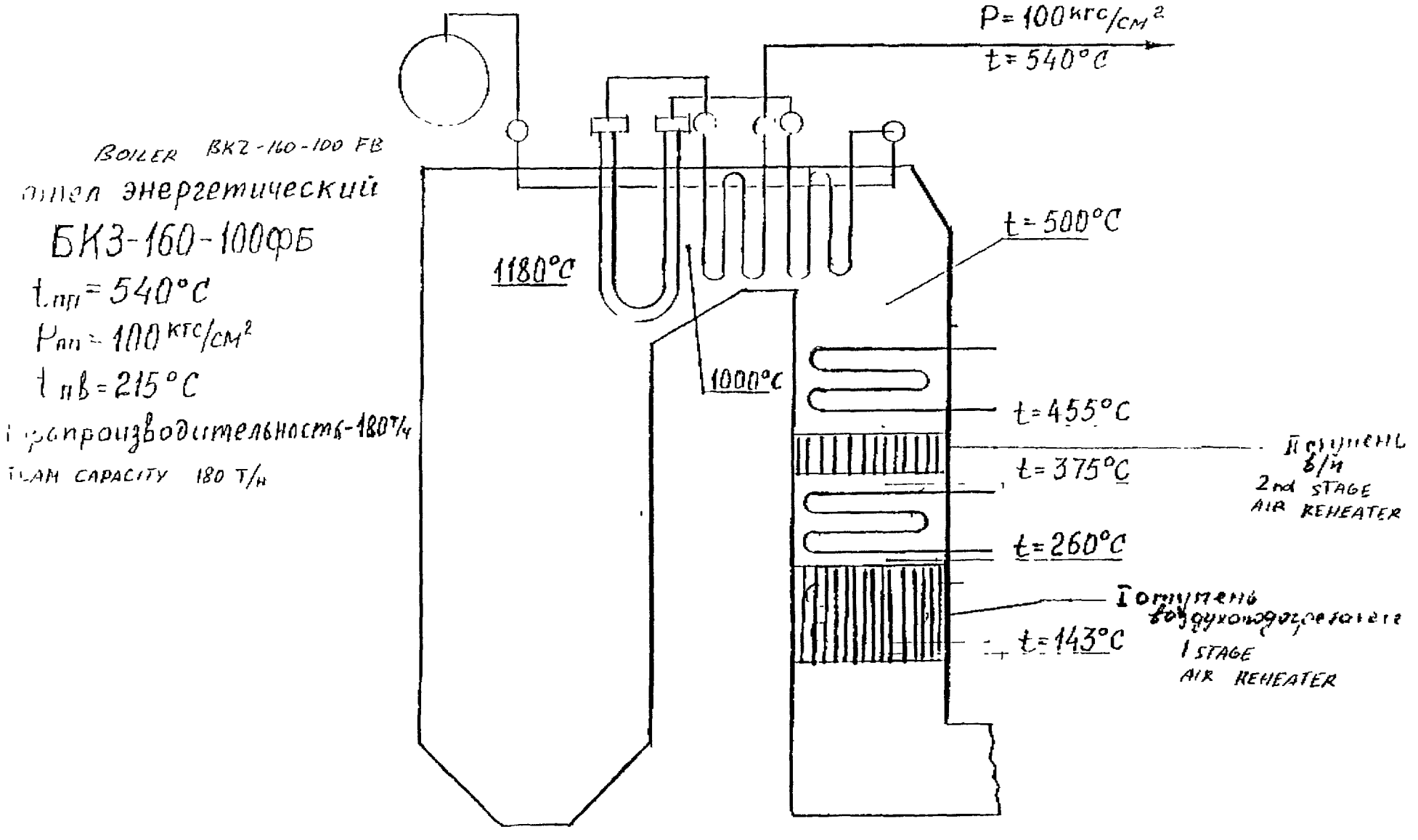
P= 100 кгс/см²
t= 540°C
BOILER BKZ-160-100 FB
Котел энергетический
БКЗ-160-100ФБ
t.пп = 540°C
Pпп = 100 кгс/см²
t пв = 215°C
Паропроизводительность-180 т/ч
STEAM CAPACITY 180 T/H
1180°C
1000°C
t= 500°C
t= 455°C
t= 375°C
t= 260°C
t= 143°C
Потушень в/п
2nd STAGE
AIR REHEATER
Потушень воздухоподогреватель
I STAGE
AIR REHEATER

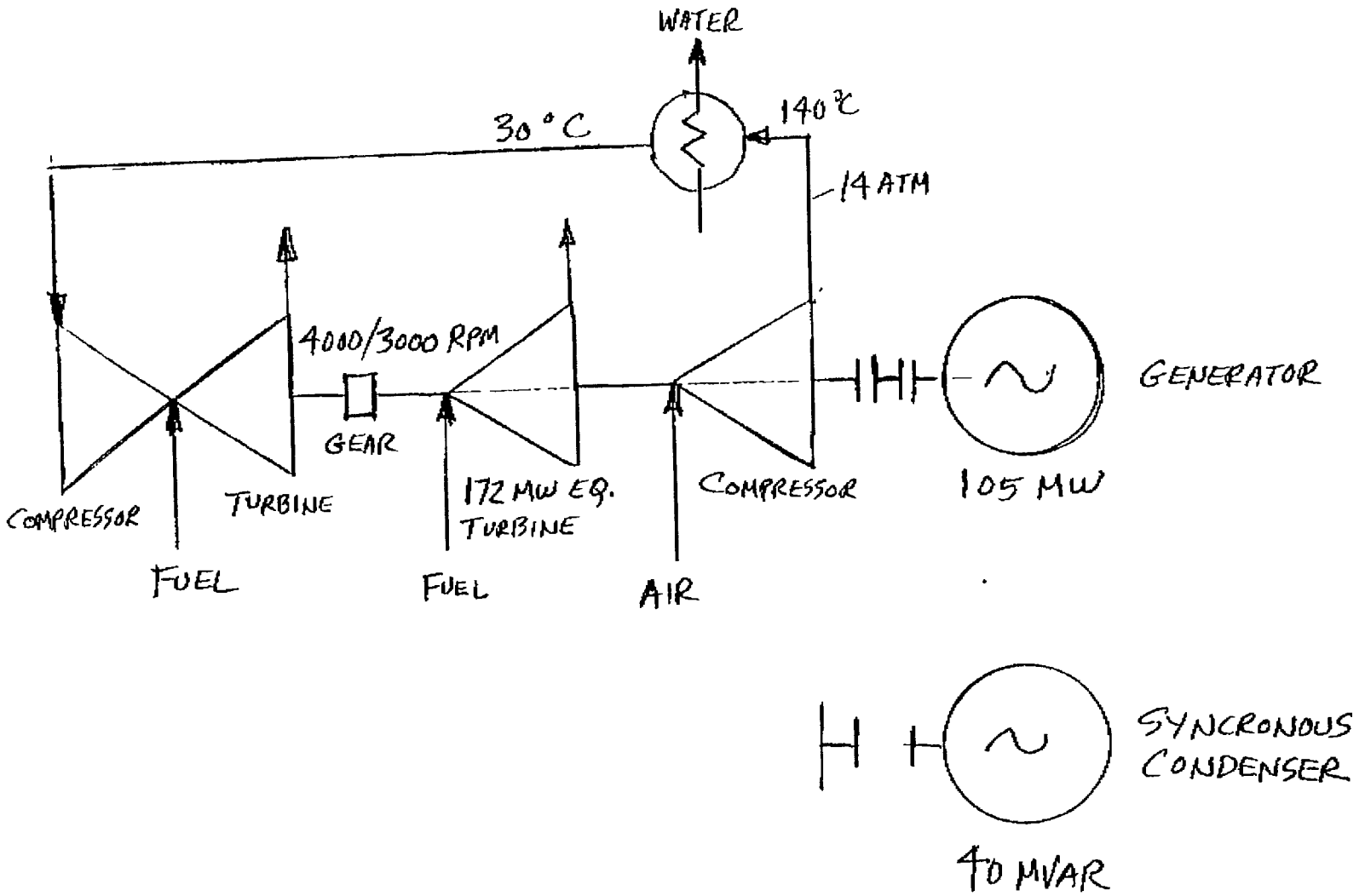

2 - GAS TURBINES - 1986

LENINGRAD - ELECTROSILA WORKS

SIMFEROPOL POWER PLANT

FUEL SUPPLY SYSTEM (MAZUT)

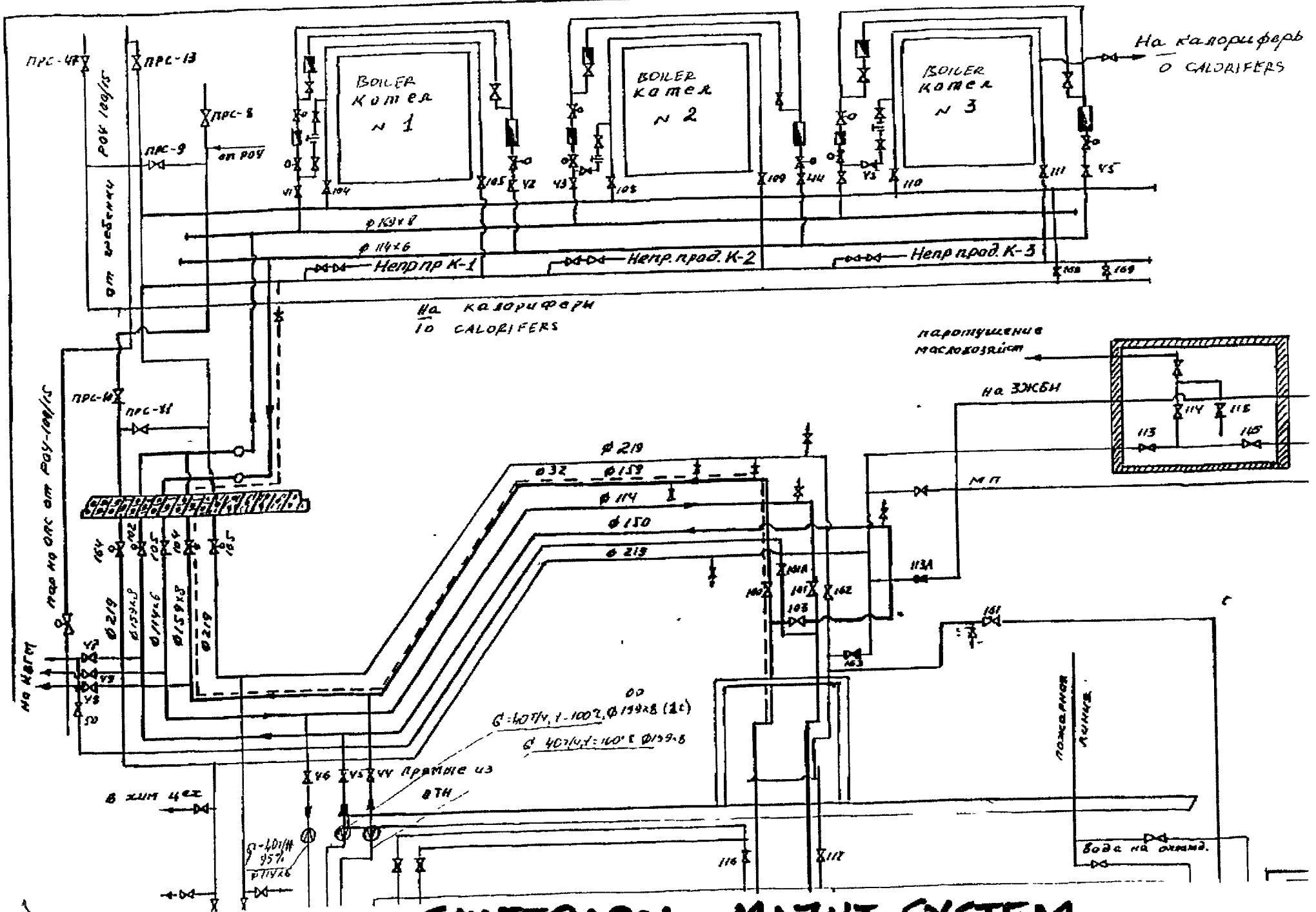

SIMFEROPOL - MAZUT SYSTEM

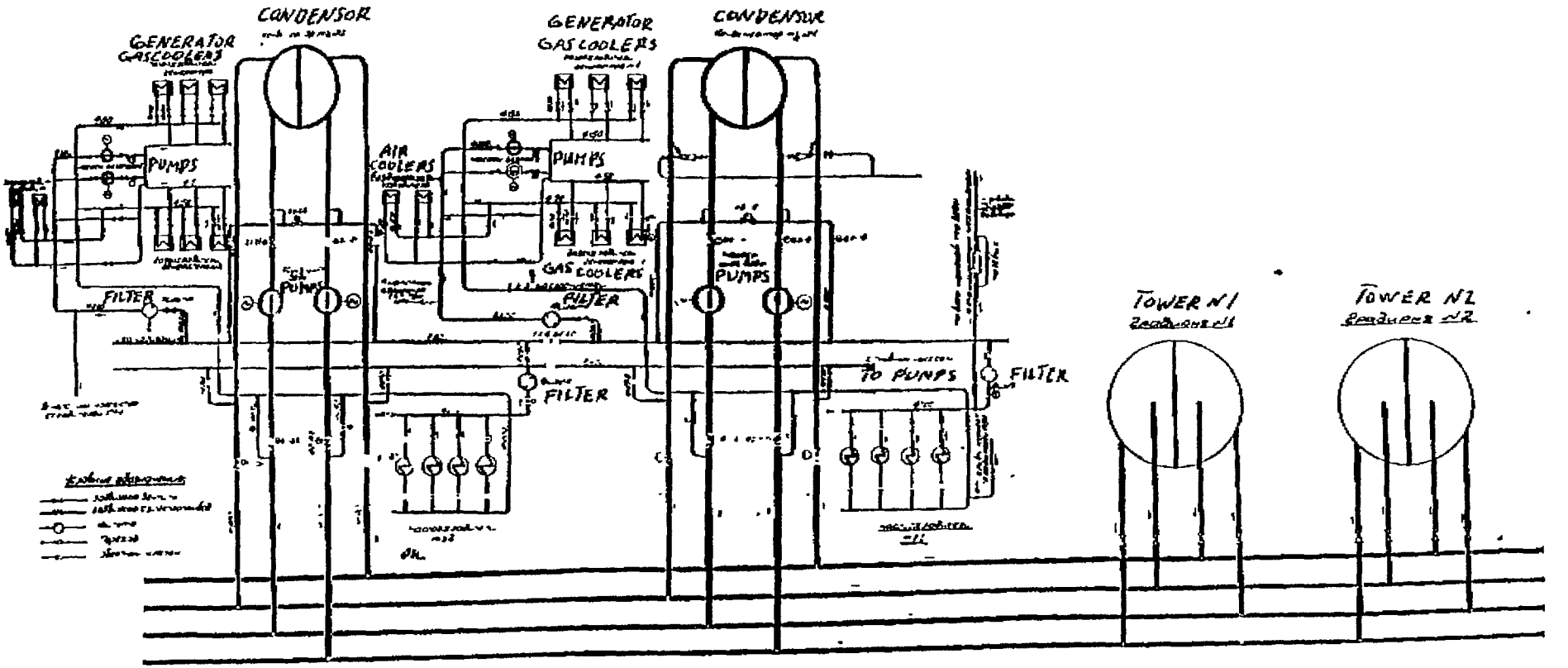

SIMFEROPOL

CIRCULATING WATER SYSTEM

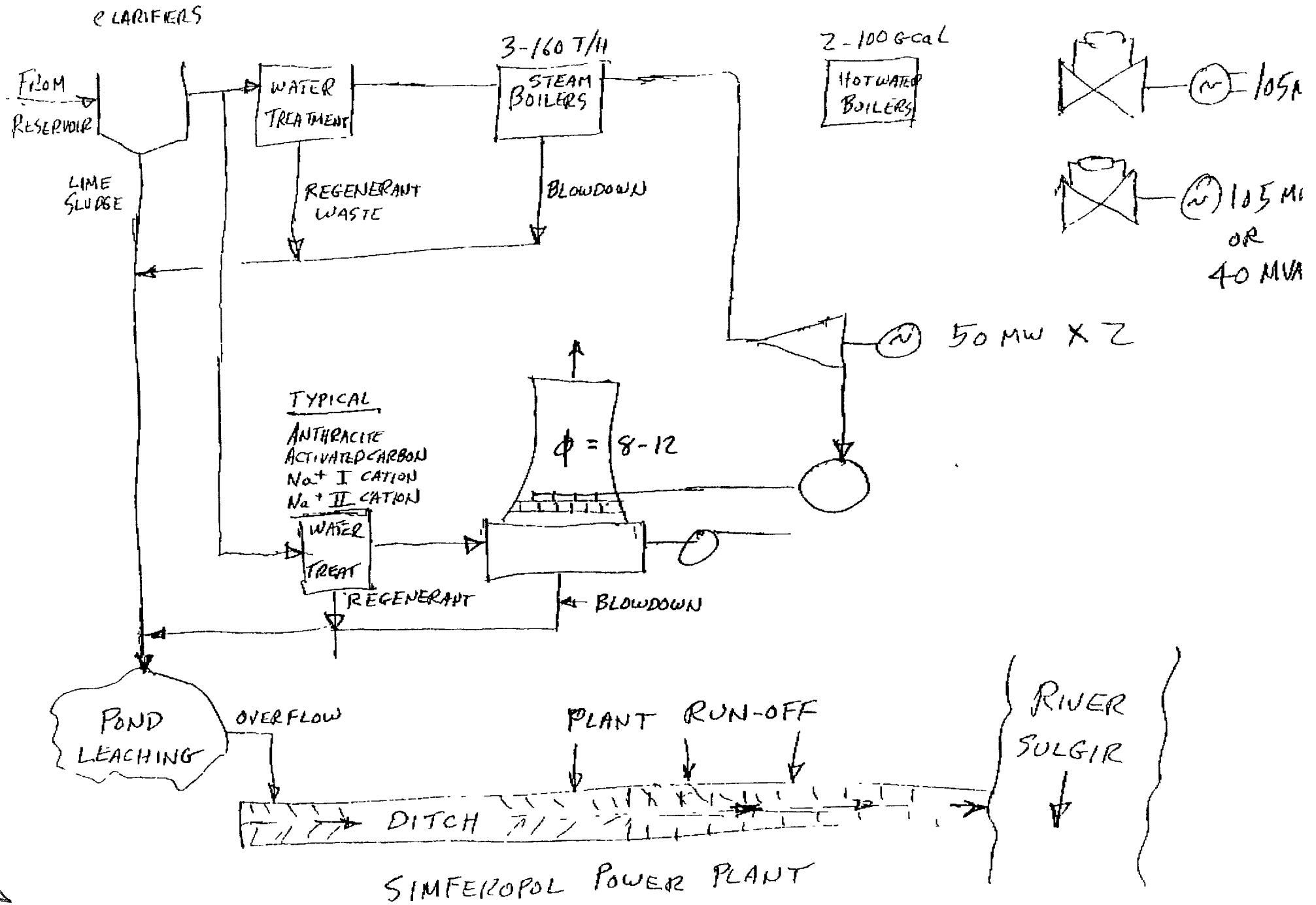
CLARIFIERS
FROM RESERVOIR
WATER TREATMENT
3-160 T/H
STEAM BOILERS
2-100 GCAL
HOT WATER BOILERS
105M
105 MW
OR
40 MVA
LIME SLUDGE
REGENERANT WASTE
BLOWDOWN
50 MW X 2
TYPICAL
ANTHRACITE
ACTIVATED CARBON
Na+ I CATION
Na+ II CATION
WATER TREAT
REGENERANT
BLOWDOWN
Φ = 8-12
POND LEACHING
OVERFLOW
PLANT RUN-OFF
DITCH
RIVER SULGIR
SIMFEROPOL POWER PLANT

Russian Natural Gas

H_2	=	1.1	C	=	0.721	Kcal/Kg x Kg/2.2046 Lb x 3.9685 BTU/Kcal = 1.8
CH_4	=	95.0	H	=	0.24	
C_2H_6	=	0.5	O	=	0.01	1.8 x Kcal/Kg = BTU/LB
C_3H_8	=	0.5	N_2	=	0.026	
N_2	=	1.5			0.997	LHV = 7840 to 8000 Kcal/Kg
O_2	=	0.5				
		99.1				

$$MW = 2\,H_2 + 16\,CH_4 + 30\,C_2H_6 + 44\,C_3H_8 + 28\,N_2 + 32\,O_2$$

$$= (2 \times 0.011) + (16 \times 0.95) + (30 \times 0.005) + (44 \times 0.005) + (28 \times 0.015) + (44 \times 0.005)$$

$$MW = 16.232$$

Conversion of Volumertric to Weight Analysis

$$C = (12\,CH_4 + 24\,C_2H_6 + 36\,C_3H_8) / MW$$

$$C = ((12 \times 0.95) + (24 \times 0.005) + (36 \times 0.005)) / 16.232 = 0.721$$

$$H = (2\,H_2 + 4\,CH_4 + 6\,C_2H_6 + 8\,C_3H_8) / MW$$

$$H = ((2 \times 0.011) + (4 \times 0.95) + (6 \times 0.005) + 8 \times 0.005)) / 16.232 = 0.24$$

$$O = 32\,O_2/MW = 32 \times 0.005 / 16.232 = 0.01$$

$$N_2 = 28\,N_2/MW = 28 \times 0.015 / 16.232 = 0.026$$

$$W_a = 11.5C + 34.5\,(H - O/8) + 4.3\,S$$

$$= (11.5 \times 0.721) + 34.5\,(0.24 - 0.01/8) + (4.3 \times 0)$$

$$W_a = 16.528 \text{ LBS AIR/LB FUEL}$$

$$W_{H2O} = 9H + W + 0.014\,(1 + X)\,W_a,\ (1 + X = 1) \text{ Excess Air, Stochiometric}$$

$$= (9 \times 0.24) + 0 + (0.014 \times 16.528)$$

$$W_{H2O} = 2.39 \text{ LBS WATER/1 LB FUEL FORMED FROM COMBUSTION}$$

$$HHV = LHV + 1040 \times W_{H2O}$$

$$= (1.8 \times 7840) + (1040 \times 2.39)$$

$$HHV = 16{,}598 \text{ BTU/LB LOW VALUE}$$
$$= 16{,}886 \text{ BTU/LB SPECIFICATION}$$

Russian Natural Gas

H_2	=	1.1
CH_4	=	95.0
C_2H_6	=	0.5
C_3H_8	=	0.5
N_2	=	1.5
O_2	=	0.5
		99.1

Ft^3 Dry Flue Gas/ Ft^3 Gas = $(0.0189\ H_2) + (0.0856\ CH_4) + (0.1524\ C_2H_6)$

$+ (0.2190\ C_3H_8) + (0.01\ N_2) + (0.0378\ O_2)$

= 8.335

$Ft^3\ CO_2$/ Ft^3 Gas = $(0.01\ CH_4) + (0.02\ C_2H_6) + (0.03\ C_3H_8) + (0.01\ O_2)$

= 0.986

CO_2% = 100 x $Ft^3\ CO_2/Ft^3$ Flue Gas = 0.986/8.335

CO_2 = 11.83% Ultimate for Perfect Combustion

Mazut		Dry	Wet
C	=	84.7	80.47
H_2	=	10.7	10.17
N_2	=	0.9	0.86
O_2	=	0.7	0.67
S	=	3.5	3.33
W	=	0.0	5.0
Ash	=	0.14	0.13
		100.64	100.63

W_a = 11.5C + 34.5 (H - O/8) + 4.3 S

= 11.5 (0.8047) + 34.5 (0.1017 - 0.0067/8) + 4.3 (0.0333)

W_a = 12.88 LBS AIR/LB FUEL

W_{H2O} = 9H + W + 0.014 (1 + X) W_a, (1 + X = 1.0) Excess Air Stochiometric

= 9 (0.1017) + 0.05 + 0.014 (1.0) 12.88

W_{H2O} = 1.15 LBS WATER/1 LB FUEL FORMED FROM COMBUSTION

HHV = LHV + 1040 x W_{H2O}

= (1.8 x 9568 Kcal/Kg) BTU/LB + (1040 x 1.0)

= 18,414 BTU/LB

Mazut

C	=	80.47
H_2	=	10.17
N_2	=	0.86
O_2	=	0.67
S	=	3.33
W	=	5.0
Ash	=	0.13
		100.63

Ft^3 Flue Gas/ Lb Fuel $= 1.505C + 3.57\ H_2 + 0.557\ S + 0.135\ N_2 - 0.448\ 0_2$

$= 1.505\ (80.47) + 3.57\ (10.17) + 0.557\ (3.33) + 0.135\ (0.86) - 0.448\ (0.67)$

$= 158.68\ Ft^3$ Flue Gas/Lb Fuel

$Ft^3\ CO_2$/ Lb Fuel $= 0.315C = 0.315\ (80.47) = 25.348$

$CO_2\%$ $= 100 \times Ft^3\ CO_2/Ft^3$ Flue Gas $= 25.348/158.68$

CO_2 = 15.97% Ultimate for Perfect Combustion

SIMFEROPOL
NATURAL GAS PRICING

1994	Consumption		Power Plant	Gasprom			KRB/ 1000 Nm^3	$/ 1000 Nm^3	$/ 10^6 BTU	$ Lost
	Tonnes	10^6 Nm^3	Kcal/Kg	BTU/Ft^3	Kcal/Kg	DIF				
January	16,971	23 5	7,646	643	7,937	-291	578,615	15.64	0 69	13,523
February	14,752	20.5	7,762	648	7,994	-232	716,721	15 65	0 68	9,236
March	14,477	20 1	8,118	645	7,964	+154	765,697	16 65	0 73	(6,459)
April	12,768	17 7	7,822	645	7,966	-144	686,860	14.93	0 66	4,816
May	11,994	16 6	8,079	650	8,028	+51	702,410	15.14	0.66	(1,602)
June	11,348	15.7	8,144	678	8,372	-228	656,100	13 96	0 58	5,955
July	11,731	16.3	8,123	676	8,344	-221	726,462	16 40	0.69	7,099
August	11,537	16.0	8.050	673	8,307	-257	736,940	15.88	0.67	7,884
September	11,561	16 0	8,103	673	8,308	-205	976,376	16 66	0.70	6,584
October	12,176	16.9	7,460	640	7,900	-440	1,071,963	13.32	0 59	12,544
November	14,996	20 8	7,730	640	7,900	-170	3,314,383	27 06	1 20	12,140
December	9,525	13 2	8 050	640	7,900	+150	3,472,715	26 57	1 18	(6,691)
Annual	150,836	213.3		654 3		--		17 27	0 747	$65,029

Tons/720.947 = Nm^3 x 10^6. BTU (LHV)/Std Ft^3 = 0.081 x Kcal/Kg, m^3 = 35.31 ft^3

Total $3,684,427

DAMAGE RECOVERABLE

SIMFEROPOL

1994	Power Generation 10^6 KWH	Net Power At Bus 10^6 KWH	Hot Water and Steam G Cal	Natural Gas		Mazut		Heat Release Minus Losses G Cal		Total Heat Release G Cal
				1000 m^3	Std. Fuel Tons	Tons	Std Fuel Tons	Hot Water	Steam	
January	30408	25318	71218	16971	19168	142	191	67093	962	68055
February	27379	22379	89199	14752	16379	3074	7128	84973	870	85843
March	27738	22740	72362	14477	15925	2180	2805	68005	812	68817
April	29360	25913	30675	12768	13954	--	--	26866	701	27567
May	29099	26196	17352	11994	13185	--	--	15856	383	16239
June	28559	25769	12109	11348	12320	--	--	9314	2184	11498
July	31931	29102	6208	11731	12904	--	--	4388	1644	6032
August	30601	27812	9807	11537	12691	--	--	5592	3880	9472
September	30414	27437	12933	11561	12717	--	--	8215	4252	12467
October	31037	27436	23371	12176	14089	485	651	16080	5519	21599
November	33664	28691	53816	14996	17353	1375	1846	42332	8356	50688
December	33089	27684	70456	9525	11058	7145	9491	65974	1900	67874
Annual	363279	316477	469506	153836	171743	14401	19112	414688	31463	446151

QUALITY OF INITIAL WATER AND
CIRCULATING WATER IN SIMFEROPOL POWER PLANT

Parameter	Intial Water		Circulating Water	
Alkalinity Meq/Kg	Max - 4 2	Min - 2.26	Max - 2.5	Min - 1.3
Hardness	Max - 5.5	Min - 3.4	Max - 11.4	Min - 4.2
Conductivity US/Cm^2	Max - 283	Min - 210	Max - 680	Min - 238
SO_4^{-2} Mg/Kg	Max - 65.4	Min - 45.7	Max - 481	Min - 82.5
pH	7.89		8.23	
LiO_3^{-2} Mg/Kg	6 2		14.8	
CU^{+2} Mg/Kg	46.3		100	
Fe^{+3} Mg/Kg	0.33		0.27	
Cl	15.8		35	
Oxidation	2.4		4 14	
CO_2	4.5		--	
NU_3	OTC		--	
Suspended Solids	--		6.9	

SIMFEROPOL TTP 1994
ANALYSIS

	Mazut Kcal/Kg	
	Power Plant	
January	9640	S -2.8
February	8611	
March	9492	W -3.5
April	9497	Ash Content
May	--	Not More Than
June	--	0.14%
July	--	Flash Point
August	--	143°C
September	9212	Viscosity 80°
October	--	30 Centistokes
November	9407	0.985 Density
December	9250	@ 20°C

SIMFEROPOL POWER PLANT

Laboratory Instrument Priority List

1 2 - Oil in water analyzers

2 2 - Gas leak detectors - natural gas and hydrogen

3. 1 - On-line natural gas calorimeter

4 1 - Condenser tube leak detector

5 1 - Laboratory pH meter

6 2 - Dissolved O_2 in feedwater (ORP probes or chemettes)

7 1 - Laboratory silica (SiO_2) analyzer

8. 1 - Analyzer for Vanadium in mazut (for gas turbines)

Boiler Instruments Priority List

1. 4 - In-situ oxygen probes for steam boilers

2. 2 - In-situ oxygen probes for hot water boilers

3. 3 - Mazut flow meters for all boilers supply and return
(2 - 159 x 8 mm @ 100°C, 1 - 114 x 6 mm @ 97°C)

CHECKLIST
IMPROVING COMBUSTION EFFICIENCY
UKRAINIAN POWER PLANTS

The following work will be performed at each plant, as a minimum

- Introduction and information exchange with plant management
- Discussion and presentation of the scope of work
- Identify the persons to be assigned for hands-on audit training
- Provide training and assistance to the team selected on the use of the demonstration portable instrumentation
- Perform audit tests
- Leave behind the demonstration portable instruments
- Determine physical locations for installing the stationary instruments
- Determine locations for installing the remote monitoring modules
- Determine physical characteristics related to the locations for the stationary instruments

ПЕРЕЧЕНЬ МЕРОПРИЯТИЙ ПО ПОВЫШЕНИЮ ЭФФЕКТИВНОСТИ ПРОЦЕССОВ ГОРЕНИЯ ТОПЛИВА НА УКРАИНСКИХ ЭЛЕКТРОСТАНЦИЯХ.

В качестве программы минимума на каждой станции будет произведен следующий объем работ:

- Представление и обмен информацией с администрацией станции;

- Обсуждение и представление объема работ;

- Назначение персонала для проведения аудита;

- Обучение и помощь в обучении выбранного персонала по вопросам применения портативного оборудования;

- Передача демонстративного портативного оборудования;

- Определение места для установки стационарного оборудования;

- Определение места для установки дистанционных измерительных модулей;

- Определение физических характеристик оборудования ТЭС для установки стационарных приборов;

Simferopol
02 23 95

SIMFEROPOL POWER PLANT
MEASURES AIMED AT EFFECTIVE FUEL UTILIZATION

1. Modernization of furnaces, convective gas conduit (bK3-150-100 Фbtype boilers) caused by the change of fuel to gas and mazut.

2 Modernization of bK-50-90 type steam turbines with the purpose to establish controlled heat extraction Re-marking was performed after the modernization: the type of the modernized turbines is T-34/55-90

3 Mastering and operation of two ГТ-100-3M type units.

4 Mastering and operation of two КВГМ-100 type water boilers.

5 Installation and operation of the Ш-600 unit

6. Rehabilitation of mazut-handling facilities and construction and operation of the combined fuel pumphouse.

7 The change of the burner sprayers of the ГТУ-1,2 type to sprayers with diameter 23mm.

8. Rehabilitation of the burners of bK3-160-100 Фb type boilers.

Signed

Director of the Simferopol Thermal Power Plant — Mr. Tchuprinko A.G

Chief of the Technical Department — Mr. Babitchev V N.

APPENDIX D

List of Contacts Made During Plant Audits

PERSONS MET DURING MEETINGS AT
THE SIMFEROPOL POWER PLANT

1.	Alexander Chuprinko	-	Director of Simferopol Power Plant
2.	Oleg	-	Deputy Director
3.	Valery Babichev	-	Chief of Technical Department
4.	Alexander Litvinov	-	Chief of Automatic and Measuring Equipment Department
5.	Alexander Dubinets	-	Chief of Electrical Works
6.	Sergey Kojevnikov	-	Chief of Boiler and Turbine Works
7.	Alexandr Frolov	-	Deputy Chief of Technical Department
8.	Ludmila Vavilova	-	Chief of Water Treatment and Chemical Works
9.	Alexander Kozelsky	-	Depury Chief of Heat Generation Department of Krymenergo
10.	Galina Konstantinova	-	Engineer of Heat Generation Department of Krymenergo Chief - Instrumentation and Control
11.	Olga Valyaeva	-	Ecology Engineer, Krymenergo
12.	Alexander Pilganchuk	-	Chief of Maintenance Department
13.	Victor Bashalin	-	Engineer (Kern)
14.	Michail Markin	-	Engineer (Kern)
15.	Nikolay Kerentsev	-	Deputy Chief Engineer, Krymenergo
16.	Vladimir Cherkosov	-	Chief Engineer of Power Plant
17.	Alexander P. Opatko	-	Chief Engineer, Krymenergo

SIMFEROPOL POWER PLANT

ORGANIZATION STRUCTURE

Managerial Sector

1 Director
2. Chief Engineer
3. Deputy Director for General Affairs
4 Labor Safety Engineer
5 Chief of Personnel Department
6 Chief of Civil Defense Department
7 Supply Department
8. Technical Department
9 Construction Department
10 Department of Planning
11. Bookkeeping
12. Senior Clerk

Technical and Production Sector

1 Boiler and Turbine Work
2. Gas Turbine Works
3 Electric Works (Including Laboratory)
4 Automation and Measurement
5 Water Treatment Works
6. Heat Supply and Underground Lines

Non Production Sector

1 Housing
2. Kindergarten
3 Farming
4 Dispensary
5 Dining Hall (Canteen)

APPENDIX E

Abbreviations and Unit Conversions

ABBREVIATIONS AND UNIT CONVERSIONS

AC	=	alternating current
amps	=	amperes
atm	=	atmosphere = 14.696 pounds per square inch
bar	=	100,000 pascals = 14.504 pounds per square inch
BTU	=	British thermal unit
cfm	=	cubic feet per minute
cm	=	centimeter = 0.3937 inches
cm^2	=	square centimeter = 0.155 square inches
CO	=	carbon monoxide
CO_2	=	carbon dioxide
DC	=	direct current
°C	=	degree CelsiusT[°C] = (5/9)*(T[°F] -32)
°F	=	degree Fahrenheit
°R	=	degrees RankineT[°R] = T[°F] + 460
ECO	=	Energy Conservation Opportunity
eff	=	efficiency
ex air	=	excess air
ft^2	=	square feet
ft^3	=	cubic feet
Gcal	=	gigacalorie = 1 billion calories = 3.968 million BTU
GJ	=	gigajoules = 1 billion joules
gph	=	U.S. gallons per hour
gpm	=	U.S. gallons per minute
GWh	=	gigawatt hours = 1 billion watt hours
H_2	=	hydrogen
H_2O	=	water
H_2SO_4	=	sulfuric acid
hectare	=	10,000 square meters = 2.471 acres
hectoliter	=	100 liters = 26.42 U.S. gallons
Hg	=	mercury
hr	=	hour
Hz	=	hertz = cycles per second
J	=	joules
kcal	=	kilocalories = 1 thousand calories = 3.968 BTU
kg	=	kilogram = 2.2046 pounds
Kgcc	=	7,000 kcal = 27,776 BTU
kJ	=	Kilojoules = 1 thousand joules = 0.947813 BTU
km	=	kilometer = 0.621 miles
kN	=	kilonewton = 1 thousand newtons
kp	=	kopec = 1/100 ruble
kPa	=	kilo pascals = 1 thousand pascals = 0.14504 pounds per square inch
kV	=	kilovolts = 1 thousand volts
kVA	=	kilovolt-amperes
kVAr	=	kilovars = 1 thousand volt-amperes (reactive)
kW	=	kilowatt = 1 thousand watts
kWh	=	kilowatt hour = 1 thousand watt hours

lbs	=	pounds
liter	=	0.2642 U.S. gallons = 0.03531 cubic feet
m	=	meter = 39.37 inches
m^2	=	square meter = 10.76 square feet
m^3	=	cubic meter = 35.31 cubic feet
mA	=	milliampere = 0.001 amperes
MCal	=	megacalorie = 1 million calories
metric ton	=	1 thousand kilograms = 1.1023 U.S. tons
mg	=	milligrams
min	=	minute
MJ	=	megajoules
mm	=	millimeter = 0.03937 inches
MPa	=	1 million pascals = 145.04 pounds per square inch
MVA	=	megavolt-amperes
MW	=	megawatt = 1 million watts
MWh	=	megawatt hours = 1 million watt hours
NG	=	natural gas
nm	=	nanometer
Nm^3	=	cubic meters at standard conditions of temperature and pressure (20°C and 1 atmosphere)
NO_x	=	nitrogen oxide
O_2	=	oxygen
P	=	pressure
PC	=	personal computer
ppm	=	parts per million
psi	=	pounds per square inch
psig	=	pounds per square inch (gauge)
R	=	ruble
s	=	second
SO_2	=	sulfur dioxide
sq ft	=	square feet
Tcal	=	tetracalorie = 1 trillion calories = 3.968 billion BTU
T	=	temperature
TPS	=	Thermal Power Station
V	=	volts
VA	=	volt amps
VARs	=	volt-amps reactive
yr	=	year

APPENDIX F

Letters of Receipt for Equipment
Energy Audit Items Lists

ПРОИЗВОДСТВЕННОЕ ЭНЕРГЕТИЧЕСКОЕ
ОБЪЕДИНЕНИЕ
„КРЫМЭНЕРГО"
Симферопольская ТЭЦ
им. В. И. Ленина

333019 г. Симферополь, Монтажная, 1
Тел: директор 27-31-49, зам. директора 293360
секретарь, бухгалтерия 943-572
Р/счет 221818 в КРУ ПИБ
г. Симферополя

№

На №

Настоящим подтверждается, что представителем американской кампании "Зернз энд Роу" Джоном Холбергом переданы Симферопольской ТЭЦ следующие электронно-измерительные приборы:

I. Модель 2000 "ЭНЕРАК", Анализатор процесса сгорания, включая:
   - зонд;
   - программное обеспечение Виндоус.
2. Флюк. Модель 4I. Анализатор гармоник электричества, включая:
   - клещи для тока 500 А;
   - клещи для тока I000 А;
   - программное обеспечение;
   - портфель для прибора.
3. "Минолта" 300 НФ/300
   Бесконтактный определитель температуры.
4. Переносной компьютер фирмы Тексас.
   (программное обеспечение)
5. Принтер "Окидата". Модель 380.
6. Сопутствующее оборудование:
   - 2 комплекта кабелей для модема;
   - устройство для подзарядки батарей;
   - аккумуляторы типа "С";
   - конвертор напряжения и вилки;
   - модем;
   - программа для установки русского языка;
   - русифицированная клавиатура;
   - программное обеспечение Ворд Перфект;
   - программное обеспечение Виндоус;
   - программное обеспечение Лотос;
   - программное обеспечение Проком Плас.

Приборы были закуплены, доставлены и переданы Симферопольской ТЭЦ в рамках программы Агентства по Международному Развитию США "Повышение эффективности работы украинских ТЭЦ".

Приборы переданы Симферопольской ТЭЦ в качестве безвозмездной помощи Украине со стороны правительства США в рамках двухсторонней договоренности

и технико - экономическом содействии Украине со стороны США.

23.02.95.

Директор Симферопольской ТЭЦ
Чугринко А.Г.

John E. Hallberg

Д.Холберг, ст. инженер
"Бернз энд Роу"

ENERGY AUDIT ITEMS

POWER PLANT ENERGY SAVINGS

Deaerator vents

Steam Traps

Boiler Blowdown

Mazut tanks vents & leaks

Leaks - Steam & feedwater & compressed air and Nat. gas

Boiler leaks - fire box, flue gas ducts

ID fan wear, eff., leakage

FD Fans wear, eff., leakage

Air heater leakage, ESP leakage, efficiency if coal

Insulation-boiler, heaters, deaerator, piping, duct work

Generator losses - cooling system eff. (scale, crud)

Condenser/vac - leakage, cooling water fouling

ASME Short form (heat rate) & PT6 abbreviated

Boiler feed pumps - seals leakage

Valve Stem packing leaks

Turbine lube oil system - cooling system (scale, crud)

Boiler combustion - excess air, orsat, fuel flow, air flow, temp, press., burners, carbon losses

Electrical losses - transformers, large motors

District heating water losses (quantify)

ВОПРОСНИК ПО УЛУЧШЕНИЮ КПД СГОРАНИЯ НА УКРАИНСКИХ ЭЛЕКТРОСТАНЦИЯХ

Следующая работа будет проведена на каждой из электростанций, как минимум:

* Представление и обмен информацией с руководством станции

* Обсуждение и представление обьема работ

* Оценка технических и организационных возможностей

* Установление возможных направлений сотрудничества

* По возможности определение помощи на местах

* Определение и координирование рабочего графика

* Дискуссии с персоналом, отвечающим за работу станции

* Определение наличия существующих источников информации и данных

* Определение данных о работе станции на всем протяжении ее существования

* Визит на станцию для определения требований к выбранному измерительному оборудованию:

  Анализаторы сгорания
  Счетчики потока топлива (газ, нефть или уголь)
  Кислородные анализаторы

* Ознакомление с существующими чертежами по трубопроводам и измерительной технике для определения местонахождения пунктов мониторинга

* Определение физического местоположения для установки первичного элемента

* Определение местоположения для установки дистанционных модулей мониторинга

* Подбор персонала для обучения на местах навыкам проведению аудита

APPENDIX G

Reference.

1 Plant Audit Visit Trip Report, October 1994
2 Preliminary Audit Report, December 1994
3 Plant Audit Visit Trip Report, Team #2, March 1995
4 Follow-up Audit Trip Report, July-August 1997

REGIONAL USAID MISSION FOR UKRAINE, BELARUS AND MOLDOVA

August 11, 1994

MEMORANDUM FILE: POWERPLANT EFFICIENCY CRIMEA

TO: Dr.James Osborn
Project Officer
Office of Energy, Environment and Natural Resources

FROM: Andrei Parinov, PDS

SUBJECT: Combined Heat and Power Plants (CHP) Combustion Efficiency Demonstration Project in Crimea

As a result of our recent visit to Crimea between August 3-9, 1994 and an opportunity to get familiar with Crimean CHPs' technical problems, Andrei Kononov, engineer/expert of IDEA/PADCO and I have identified areas for the USAID technical assistance projects in that part of Ukraine.

The proven low-cost method to increase power plants' operational capabilities and ensure industrial reliability is to equip CHPs with new, quick response instrumentation that display the principal combustion process parameters: residual O2, SOx, NOX, CO2, CO etc. Accurate data enables the adjustment of boiler operations so as to fire less fuel and increase boiler efficiency.
These gains in turn lead to reduced emissions and reduced carbon release to the atmosphere. Stationary instrumentation and portable combustion analyzers measuring flue gases are a first step towards life extension of combined heat and power plants that are in need of major rehabilitation.

In the trip report we have tried to explain the major reasons for accomplishing a combustion efficiency demonstration project at Simferopol CHP, the biggest and least efficient power plant in Crimea.
We assume the cost of the demo project would not exceed $100,000. Having additional funds ($50,000), it could be possible to provide all the CHPs in Crimea with the portable combustion analyzers and additional instrumentation.

In the trip report we have outlined the main specification and parameters re CHPs' operation. The detailed technical is available and we can provide it any time, when required.

make copy for B&Rs Goldbrunner

CRIMEA
ENERGY SECTOR DEVELOPMENT
TRIP REPORT
(August 3-9, 1994)

Delegation:

Andrei Parinov, PDS USAID/Kiev
Andrei Kononov, IDEA/PADCO Energy Specialist

Purpose: to investigate ways to improve district heating plants combustion efficiency

Objectives: (1) foster improved management of boiler/plant operations by identifying and implementing immediately cost-effective "low-cost - no cost" efficiency improvements; (2) provide equipment support to implement low-cost options; (3) improve monitoring and energy management; (4) adjust boiler components to eliminate power plant impact (NOx, CO2, CO, SOx) on environment; (5) provide operation training.

Background

One out of 6 newly-emerged ministries set up in the Republic of Crimea is the Ministry of Energy, Fuels and Transport. The ministry is headed by Mr. Franchuk. Within the Ministry there is a Department for the power industry, headed by Mr. Dubovenko. Functions of the recently set up Ministry are not clear at the moment. Currently, the general supervision over the power sector of the Republic of Crimea is executed by the Ministry of power and Electrification of Ukraine.

During our visit to the Crimea we had meetings with the management of the CrimeaEnergo Power Production Association, the Dept. Head for the power industry (Mr. Dubovenko), power plants' directors.

We visited all the major power plants in the region: Simferopol CHP, Sakskaya CHP (Saki), Kamish-Burunskaya CHP (Kerch) and Sevastopol CHP.

Energy Sector of the Crimea

CrimeaEnergo (energy production and distribution association) is in charge of generating electricity + transmission, heat production + distribution within the territory of the Crimea. Rated output from power plants is 0.4M KW with annual capacity of 0.6 Bl.KWH.

Electricity transmission network of CrimeaEnergo is tied to the national grid by 4 high-voltage lines 330-220kV.

Electricity produced by CrimeaEnergo is hardly sufficient for covering the growing needs. The necessary portion of it is being imported from the Eastern part of Ukraine.

Reliability of electricity supply within the Crimea is not possible due to the below-mentioned factors.

(1) electricity transmission lines operate on peak load mode, stability limits are 6-8% instead of 20% required;

(2) existence of elderly, small, physically and morally depreciated power plants;

(3) closure of underbuilt Crimean Nuclear power plant;

(4) impossible construction and commissioning of new power plants due to a lack of appropriate funds in the Crimea;

(5) limits to natural gas supply to the republic.

In addition, power sector suffers from other problems: low tariffs for electricity and heat; issue of consumers' non-payment.

Another factor of concern is a demographic one: mass immigration of tatar population (380,000 officially, over 1M from non-official sources). As the result of demographic changes the Crimea faces the problem of electricity deficiency. During 1993/94 electricity consumption increased at 120 MW and tends to exceed up to 600 MW in the near future.

A combination of different factors, i.e. political instability, special attention to environment, gas delivery deficiency do not pave the way to constructioning and commissioning of new traditional energy generating capacities. Non-traditional sources of energy production (solar-electric power plants, heat pumps, wind power towers) are not capable to meet the demands in energy supply.

Taking into considerations all the aforementioned factors, the CrimeaEnergo has worked out the guidelines for the development of power sector in the Crimea:

(1) rehabilitation and upgrading the existing co-generating power plants;

(2) construction of new power plants and electricity distribution lines;

(3) modernization of reactive power controls 10-110kV;

104

(4) demand-side management (production of energy saver lamps);

(5) introduction of new tariffs for electricity and heat;

(6) energy conservation at residential buildings (heat radiators, thermostatic valves, heat pumps, heat exchangers, heat controllers);

(7) production of new electricity counters;

(8) training of the personnel of the CrimeaEnergo;

(9) equipping power plants with portable instruments of pollution control, SF6 leakage in circuit breakers of 330kV;

(10) equipping power plants with pollution filters and controls.

Out of four biggest power plants in the Crimea (Simferopol, Kamish-Burun, Sevastopol and Sakskaya CHPs), Simferopol CHP seems to be of a vital importance to the CrimeaEnergo due to:

(1) political importance: Simferopol CHP is located in the capital of the Crimea, where all government agencies are located;
(2) industry: Simferopol is the biggest and least effective due to ageing equipment though has to supply the city with electricity and heat;
(3) management: very receptive and anticipate collaborative work with American engineers;
(4) demographic factor: the population has increased drastically within recent year (new tatar settlements);
(5) social factor: necessity in reliable electricity+heat supply;
(6) geographic factor: Simferopol has an airport, whereas Saki and Kerch do not;

Thus we recommend Simferopol CHP for a demonstration boiler efficiency project. Attached are the information re power plants operation parameters and necessary equipment specification.

105

Table 1. Biggest co-generating power plants in the Crimea

Plant	Simferopol (1959)	Kamish-Burunskaya (1950)	Sevastopol (1933)	Sakskaya (1950)
Output (electric)	100 MW (2 x 50 MW)	30 MW (2x12+ 6MW)	55MW	12MW
Boilers	3	4	6	3
Boiler capacity	180 t/hr	80 t/hr	75 t/hr	75 t/hr
Turbines	2	3	3	2
Heat cap.	12,000m3/hr	4,300 m3/hr	10,000m3/hr	1,000m3/hr
Heat dist	90 m3/hr	100 m3/hr	40 m3/hr	30 m3/hr
Fuel/year gas	156,500,000 m3	-	110,000,000 m3	38,500 t spec.fuel
Fuel/year fuel oil	29,150 t	24,200 t	55,000 t	6,080 t spec.fuel
Fuel/year coal	-	96,100 t	-	-
Smoke chimneys	1	1	6	1
Heat capacity GCal/Hr	150	100	-	-
Fuel cons g/kWHr	356	184.9	490	174
Fuel cons kg/GCal	165	191	180	173

Table 2. Instrumentation necessary for the boiler efficiency demonstration project

#	Co-generating power plant	CA	SWC	FM	FHV	CC
1.	Simferopol	3	3	1+3	1	-
2.	Kamish-Burunskaya	4	4	1+4	1	4
3.	Sevastopol	6	6	1+6	1	-
4.	Sakskaya	3	3	1+3	1	-

Abbreviation:

CA - Portable Combustion Analyzer

SWC- Steam and Water Quality Controls

FM - Fuel Meter

FHV- Fuel Heat Value (instrument)

CC - Carbon Content (in the furnace)

MEETING NOTES

Tuesday, 20 September 1994

Ukraine Ministry of Energy and Electrification
State Scientific Research and Design Institute
of Alternative Energy

Subject: Status of Present Development

Attendees:

Dr. Victor G. Slulga, Director (Kiev) Tel. 011-7044-221-4604
Dr Victor D Bilodid, Sr Research Associate, Chief Project Designer

Peter Goldbrunner, Project Manager, Burns and Roe Company
John E Hallberg, Sr Mechanical Engineer, Burns and Roe Company

Discussion:

We were given a summary of existing projects in the Ukraine for development of alternative energy technologies for offsetting the dependence on expensive natural gas from Russia and the decline of Ukraine coal quality and reserves

- 4 - WECX - 100 KW Wind Energy Conversion
  U.S. Wind Power - 87% Ukraine ownership
  Built entirely in Ukraine under license

- L'VIV - 4200 m well, 210°C (410°F)

- Chimea - 80 Km N of Kiev, 5 MW thermal for Greenhouses

- Crimea - 3 wells 1-1/2 - 2 Km deep, 50 - 70°C
  Ten projects using heat

- Luhanska Resk Power Plant - feedwater heater repowering with 115°C geothermal brine

SHPOCK, General Manager of Krimenergo directed a feasibility study in 1993 prepared by people with no experience in geothermal presenting cautious results

Definition of geothermal resources in the Crimea is secondary data as a result of many wells drilled searching for oil and gas The Institute of Geology and Geochemistry in L'VIV is the principal geothermal institute in the Ukraine

It is estimated that 40% of the heating needs of Crimea could be provided from 40-50°C hot water wells. Existing geothermal wells presently displace 2-1/2 million tons equivalent oil per year They are presently working with several foreign firms on heating projects Current payback period for heat is 4-5 years. Payback for greenhouses growing strawberies is less than one year

They have been working with Ormat to try to develop a joint venture for building the Ormat binary turbine in one of the three Ukraine turbine factories.

They wanted to learn more about U.S technology and manufacturers involved in geothermal Following are a few U.S.A. sources of information

- Barber Nichols - binary turbines
- Mafi Trench - binary turbines
- Atlas Copco - binary turbines
- Elliott - geothermal steam turbines
- Geothermex - Subir Sanyl, Geologist
- Thermochem - Paul Hirtz, Geochemist
- Geothermal Resources Council

Following are a few geothermal plants we are familiar with and have worked on.

- COSO - China Lake, California
- Brady Hot Springs, California
- Cerro Prieto, Mexico
- Maritaro, Mexico
- Los Humeros, Mexico
- Steamboat Springs, Nevada
- Imperial Valley, California
- Vale, Oregon

We could not offer them any future assistance because alternative energy technology is not in scope of combustion efficiency

ALTERNATIVE ENERGY CALIFORNIA

- Geothermal - COSO, Imperial Valley, Geysers
- Wind Power - Palm Springs, etc
- Energy Storage - Many examples
- Garbage Power - City of Commerce (FW Mass Burn)
- Landfill Gas - Puente Hills, 50 MW
- Solar Power - Luz (Rt 395)
- Fluidized Bed - Trona, Mecca, etc. (Pyropower, ABB-CE)
- Coal Gasification - Coolwater Station (Texaco & GE)
- Methane - Cow Manure - Ontario, Rancho Cucamonga (Fertilizer Production and CO_2 for Greenhouse)

Biorecycling Technologies Inc.
6101 Cherry Avenue
Fontana, CA 92336
Tel. 909-899-2982
Fax. 909-899-9519
Jim Hamamoto

TRIP REPORT

PLANT AUDIT VISITS

ODESSA, SIMFEROLPOL, KRIVOI ROG AND BURSHTYN

TEAM NO 2

UKRAINE

Prepared by: P. Gupta 4/7/95
for John E. Hallberg, P E./Date

Prem Gupta 4/7/95
Prem Gupta/Date

April, 1995

Burns and Roe Enterprises, Inc.
Oradell, New Jersey 07649

TRIP REPORT

1.1 Introduction

USAID/ENI retained Burns and Roe Enterprises, Inc. (BREI) to perform plant audit visits to seven Ukrainian Thermal Power Plants (TES).

The objective of these audit visits is to improve the combustion efficiency of the Ukrainian Power Plants.

Burns and roe performed the plant audit visits during a Feb 6--Mar 11 trip to the Ukraine in accordance with the Delivery Order objectives. The following report describes the activities of Team #2 (John E. Hallberg, P.E. and Prem Gupta), which visited Odessa CHP plant, Simferopol CHP plant, Krivoi Rog TPP and Burshtyn TPP. A report describing the activities of Team #1 (Selisett Corban, P.E. and George Keller, P.E.) which visited Kourakhovska, Uglegorsk and Zmiev TES was issued separately.

1.2 Work Plan

The following work was planned for each plant audit visit:

- Perform introduction and information exchange with the plant management.
- Discuss and present scope of the work.
- Identify personnel to be assigned for hands-on audit training.
- Provide training and assistance to the team selected for the use of the demonstration portable instrumentation.
- Perform audit tests.
- Turn over the demonstration portable instrumentation to the plant management and sign the papers.
- Determine best location for installing stationary instruments.
- Determine best location for installing receiver instruments.
- Define process and environmental conditions as well as length of the cable runs.

1.3 Trip Report and Findings

1.3.1 Mon. and Tue., Feb. 6-7, 1995 - Travel to Kiev.

Feb. 8 through Feb 15, 1995 - In Kiev.

The following activities took place during this time:

- Meetings and introductions at the office of USAID/Ukraine Mission with Dr Osborn and Andrei Parinov of USAID/KIEV.
- Meetings and introductions at the office of IDEA/KIEV with Darian Daichok and his staff.
- Arrangements for expediting delivery of USAID equipment from USA to Kiev
- Arrangements for custom clearance.
- Arrangements for delivery of USAID equipment to the office of IDEA/KIEV
- Arrangements for safekeeping of USAID equipment.
- Inspection and check-out of the arrived USAID equipment.
- Powering up and installation of the software programs for seven TI computers.
- Dry run with nine portable analyzers.
- Local procurement of the missing accessories.
- Arrangements for reliable vehicles, translators and safe travel in Ukraine.

1.3.2 Thurs. Feb. 16, 1995 - Travel to Odessaenergo - Odessa CHP Plant

Feb. 17 through Feb 21, 1995 - In Odessa CHP Plant

On Feb. 7, we went to the plant with messrs Andrew Parinov (USAID), Andryi Kononov and Vitali Plotnikov (IDEA) and met with George Vukozich, the plant director. We worked in the directors office setting up the equipment, demonstrating its use and discussing the program for combustion efficiency.

On Feb. 18 we spent some time letting the two selected engineers practice setting up the Enerac Combustion Analyzer and going through the functions. We then went to the boiler house to run some tests. We set up at the crossover to the convection pass near the extraction point for the

113

existing oxygen analyzers on power steam boiler 5 - left side. The boilers were burning natural gas. We took two samples on the left side, then took one sample on the right side and got off the boiler when the reading showed carbon monoxide went over range with excess air reading moving between 0 and 2 percent. We were informed that the FD fan on the right side was not operating because of breakdown. The plant immediately reduced load on this boiler.

We ran three tests on the left side of boiler No. 7. The combustion efficiency was fair but could be improved by reducing excess air.

We continued our discussions with the engineers requesting information and data required for our audit report and planning our work for Monday

On Feb. 20, we met with the Chief of the laboratory, Antonina Ogorodnikova to gather data and information on natural gas and mazut. We obtained test data for 1994 giving monthly average, maximum and minimum heat contents in KJoules/Nm^3 and Kcal/Nm^3 with total gas consumption by month in million Nm^3 and corresponding pricing. It appears that Odessaenergo is being sold short by an average 115 Kcal/Nm^3 by Gasprom. This is why they place such a high priority in obtaining an online recording calorimeter to prove the delivery of gas.

We went to the offsite hot water peaker boilers (3) and steam boilers (2) to look at locations to put in-situ oxygen probes and locate flow meters for mazut and get measurements. the assigned engineers were also made familiar with the operation of "Heat Spy" and Fluke harmonic analyzer.

Past noon we took the combustion analyzer to get more test data on boilers No. 5 and 7, except this time at the I.D. fans. One test was made on each side of boiler No. 7. The oxygen and excess air readings were very high, partly due to air leakage from the air heaters. We discussed the readings with the Chief Engineer of the power plant Oleg Yarotskiy and boiler expert from Odessaenergo Nicolai Marenkov. They agreed to make a slight adjustment to reduce excess air to tune the boiler and we took additional readings. The results were significant, proving to the engineers the value of this instrument for saving fuel.

We returned to the Director's office to gather the remaining information from the plant. We were given copies of boiler control diagrams, dimensions for cable runs for oxygen analyzers, etc. We also were given a letter of receipt for the equipment given to them. The engineers will provide additional test runs for our use.

1.3.3 <u>Tuesday, Feb. 21, 1995</u> - Travel to Krymenergo - Simferopol CHP Plant

<u>Feb 21 through Feb 24</u> - In Simferopol CHP Plant

On Feb. 21 evening we arrived at the power plant The plant Director Alexander Chuprinko and Deputy Director Oleg greeted us. He gave a brief description of the power plant. Andryi Kononov and Vitali Plotnikov met us and made introductions.

On Feb. 22, we brought the equipment to the Deputy Director's office. Three representative engineers from Crimenergo as well as many engineers from the power plant staff were present. Andryi Kononov gave an introduction on the purpose of the combustion efficiency program by USAID. We then gave a brief description of our scope of work and handed out copies of the checklist "Improving Combustion Efficiency" in Russian language. We also provided a list of information required for preparing our audit report.

We set up all of the instruments and demonstrated the functions and operation of the Enerac Combustion Analyzer. By noon we brought the analyzer to the boiler house and took tests at right and left side of No. 1 steam boiler near the extraction points for existing oxygen analyzer The two extraction pipes connect to a common shunt pipe to the I.D. fan suction. A single extractive type paramagnetic oxygen analyzer pulls a sample below the intersection of the two pipes. The Enerac indicated the same concentration as the existing analyzer, which was calibrated in January 1995, is installed on the newest boiler and the operators feel confident in its accuracy. A second set of tests were taken at the I.D. fan inlet.

The operators were requested to slightly close the FD fan inlet vane damper to reduce the amount of excess air. This test showed 0.1% increase in boiler efficiency, a 0.8% reduction in oxygen, a 0.4% increase in carbon dioxide and a 8% reduction in excess air.

We made a tour of the turbine building and the gas turbines and returned to the Deputy Director's office to discuss the information we required, and to learn more about the power plant. We were given a description of the plant water systems. They gave us copies of boiler control diagrams.

On Feb. 23, we went to the hot water boilers to take combustion tests. No. 1 boiler was shut down and No. 2 boiler was operating full load on natural gas. These boilers burn only mazut during winter when natural gas is curtailed to supply domestic use. We could not find a good sampling point before the convection backpass, so we took flue gas samples from a sample point ahead of the I.D. fans. The sample pipe was too small to insert the Enerac probe to get stack temperature. A hose was used to connect the probe to the sample pipe. Therefore, the efficiency numbers are not valid. Four tests, two before and two after reducing excess air showed some impressive results. Carbon monoxide can be reduced by further tuning of burner registers and fan dampers to improve turbulence in the furnace.

We opened the rear wall access door on No. 1 boiler at the upper backpass to determine a good location for a single oxygen probe, heater and calibration unit. Two tubes will have to be bumped to make an opening for the oxygen probe. The plant engineers didn't have any problem with doing this. Gas temperature is about 800C.
We obtained sizes, temperatures and flow rates for mazut flow meters. There are four hot water supply, four hot water return lines to district heating and two industrial steam supply lines with no condensate returns. They do not have any problems measuring these flow rates.

We met with Ludmilla Lavilla, the Chief of the water treatment and chemical laboratory to

discuss analytical instrumentation priorities and specifications for the power plant. Makeup water for the power plant comes from the Simferopol reservoir. The water is lime softened in clarifiers, from which the water flows to two treatment plants consisting of anthracite filters. activated carbon filters and two stages of sodium form cation exchange softeners.

Softened water is supplied to the cooling towers, boilers, and district heating system. They have had serious problems of organic fouling of cation resins due to oil breakthrough from the activated carbon filters. The hydrocarbon carryover goes with the feedwater to the boilers and results in carbonaceous deposits in the superheater tubes, resulting in reduced heat transfer, increased fuel consumption when steam temperature drops, hot spots on tubes and possible tube ruptures. Their most urgent need is to obtain two oil in water analyzers to detect hydrocarbon breakthrough from the two activated carbon trains for cleaning and reactivating the carbon

Another very high priority instrument need by the power plant is an online natural gas calorimeter to certify the delivery of gas from Gasprom, Russia. We were given data for 1994 of laboratory tests showing the heat content of gas actually delivered being lower on average than the gas heat content the power plant was paying for Although this analyzer does not contribute directly to reducing energy consumption, it will prove the loss of thousands of dollars each year of energy paid for but not received.

Later we received copies of gas and mazut data for consumption and pricing, and a letter of receipt for the equipment. The engineers said they would use the Enerac combustion analyzer to do tuning of the boilers over the next week and send us the results.

We met with the Chief Engineer of Krimenergo, Alexander P. Opatko . We discussed a broad range of subjects regarding the plans and projects for energy development in the Crimea. He placed major emphasis on the recent Ukraine Presidential Decree for development of alternative energy technologies, which Crimea, like California, has a rich potential. As a result of the extensive drilling program over the past ten years exploring for gas and oil, geothermal resources have been discovered which could provide up to 40% of Crimea heating needs. He is very much interested in our experience in geothermal technology and would like to develop greater U.S. cooperation in engineering, development and equipment. He also would like to learn more about other mature U.S. alternate technologies such as refuse burning, wind power. energy storage and solar.

On Feb. 24, the plant engineers were using the combustion analyzer on their own taking tests and tuning the boilers. We spent the day in discussions with the Deputy Director reviewing the information we received, getting clarifications and translations of some terms.

1.3.4 <u>Saturday, Feb. 25, 1995</u> - Travel to Dniproenergo-Krivoi Rog Power Plant

We met the Director, Deputy Director, Plant Chief Engineer and the Chief Engineer of Krimeaenergo before departing for Dniproenergo-Krivoi Rog Power Plant. The Chief Engineer of Krimeaenergo again emphasized the hope for future cooperation on alternative energy

116

technology and requested information, brochures and qualifications.

Feb. 26 Through March 1 - In Krivoi Rog Power Plant

On Feb. 27, we brought the equipment to the power plant and set it up in the archives library. We then went to meet the Director Valeriy Chebotar and the Chief Engineer Vladimer Ludekof and gave a brief introduction and description of the instruments we brought for them and presentation of our scope of work. The Director gave a description of the power plant. The Director and Chief Engineer then came with us to the library to look at the instruments. They then called for specialists to come meet with us.

We first met with Vadim Necrasov, Chief of water treatment and chemical laboratory and Svetlana Kikolionkova, Engineer - chemical laboratory. We discussed boiler water chemistry and fuel analyses and requested data on coal, mazut and natural gas.The most critical need is for online monitoring of oxygen in feedwater and silica (SiO_2) after the demineralizer for makeup to the condensers. Each unit has a condensate polisher. They also expressed a critical need for an online natural gas calorimeter measuring Kcal/Kg and Sp.G. and a laboratory calorimeter for measuring coal and mazut heating value in Kcal/Kg.

We were then introduced to the boiler engineers and electrical engineers who would be responsible for the instruments we brought.

We demonstrated the functions and operation of the Enerac and let the two assigned engineers practice using the instrument. We were given monthly data for 1994 consumption and prices of coal, gas and mazut.

HHV of TP coal, mazut and Russian natural gas was calculated and programmed into the Enerac with the Texas Instrument computer. We then went to No. 5 block right boiler (TPP-210A) to take some tests. We tried to get a sample at the convection backpass (about elev. 26000) where the existing oxygen analyzer extraction point is located. This location is between the backpass and furnace above the three back burners. The engineer tried to insert the probe into a sample port, but it hit something and would not go through.

We went back to No. 5 unit and took four good tests, one each through the center thermocouple insertion point ahead of each regenerative air heater.

During dinner meeting, Dr. Osborne (USAID) asked why the CIS has not used Enerac type analyzer before, to the Director and Chief Engineer. They explained that the former Soviet Union did not have the advanced manufacturing capabilities to make this kind of computerized analyzer. We explained that it is only in the past few years that the state-of-the-art electrochemical specific gas sensors have been developed in the U.S. and Europe and that the Enerac is presently the most advanced U.S. made analyzer which is computer programmable. Up to this time the Orsat flue gas analyzer has been the most accurate method for testing flue gas composition by volume for CO, O_2, CO_2, and N_2 by difference. The disadvantage in it's

use is that it takes a lot of time to set up and use, and the operator has to be experienced and constantly practice in order to get accurate readings.

On March 1, we met with the Chief Engineer, his assistant and the two boiler engineers to discuss the combustion efficiency test results and other items. Mr. Ken Carlson, BRC Project Director from Washington, D.C. was present at this meeting. The Chief Engineer seemed to be impressed at the readings shown on the Enerac printout from the previous afternoon's tests. Considering the quality of coal being burned and less than full load at 225 MW, the test results were good, indicating that the boilers were performing well. He noticed the higher flue gas temperature from the left furnace burning 15% natural gas (323,319C) vs. the right furnace burning 5% natural gas (303,304C). He recognized that improvement in performance can be made because of unburned combustible and carbon monoxide levels, where carbon dioxide levels could increase closer to the ultimate level for perfect combustion. They made several copies of the Enerac printouts for the engineers to have.

We were told that Unit 5 was reconstructed about five years ago. Unit 6 is presently disassembled and undergoing reconstruction after five years of operation. There is a lot of fireside deposits on furnace wall tubes and convection backpass tubes which results in loss of boiler efficiency. There is a lot of concern about ash slagging on the superheaters and reheaters from the different coals they receive, and they would like to get a laboratory instrument for determining ash fusion temperature to determine slagging characteristics and thus have better control over the fuel mix and boiler operation.

Because of a shortage of mazut, they presently use natural gas for flame stabilizing. They presently get coal from Donetsk, Lugansk and Kuznetsk fields. The coal is received at two car dumpers, sent to the fuel yard and mixed with dozers. From the reclaim the coal goes to the mills and it cannot be determined what kind of coal or characteristics goes to the boilers. Up to five times a day the fuel characteristics going to the boilers could change. There is usually about a four hour lead time because of holdup time in hoppers.

They could see the advantages of having nuclear dual gamma ash gage on the coal conveyors going to the boilers. This instrument could give real time readouts of percentage ash and moisture, which would allow the operators to choose the mode of operation of boilers to adjust for changes in moisture, ash content and volatiles. However, they are concerned about the cost, would much prefer to have laboratory instruments to determine proximate analyses (fixed carbon, volatiles, ash, moisture), heating value and ash fusion temperature. If they can register these instruments with the National Standardization Committee, they will be able to test coal deliveries and issue claims to suppliers for deficiencies in quality.

They urgently need an online gas calorimeter because they are being shorted on heat content by Gasprom. Their laboratory calorimeter is not commercial (certified), the tests are not continuous so they cannot make a claim for credits. We were given test results for monthly averages for 1994 as well as gas consumption.

We discussed the possibility of installing in-situ zirconium oxide oxygen probes on at least one unit, two furnaces, two per furnace, four required. If so, they would prefer installing at same location as existing extraction points to be able to compare with Russian made extractive type oxygen analyzer. Maintenance, calibration and accuracy for existing analyzers is very good and operators have high confidence in the readings. They would rather see the money spent on other higher priority instruments they need. We discussed the possibility of using infrared (1R) type carbon dioxide analyzers in addition to the existing oxygen analyzers.

We obtained line sizes and design information for specifying sonic flow meters for two supply and two return mazut lines serving the boilers. We talked about the possibility of using the pulverized coal feeders to measure revolutions with counter switches and summing to measure fuel feed to boilers. The engineers think there would be 20-25% error due to wear and spacing of feeder plates. This idea needs to be further explored.

The electrical engineer found the heat spy so useful in the first day of use that the chief engineer would like to obtain a second one. The electrical engineer found some hot spots on generator buses and some hot contacts on switchgear and they were going to immediately take action to do maintenance. Also. he will put the power analyzer to use to look for transmission and switchyard problems and he will run tests on fan and pump motors to check the motor efficiencies and the pump and fans performance.

The chief engineer asked if we knew of analytical instrumentation for performing waveform analysis to determine vibration harmonics in balancing turbine generators. They do not have the technology to balance rotors adequately after overhaul and repairs, and have sustained large economic losses to maintenance and operation from damage to bearings and blading. We said we would get them information on portable Fourier waveform harmonic analyzers and orbit vector plotters with associated computer interface equipment, transducers, fittings, cables, etc.

They also want to learn about U.S. technology for identifying hidden cracks in weld joints in complex shapes and sections in supercritical steam service. They have dye penetrant, mag particle, ultrasonic and X-ray NDT, but their X-ray equipment does not have the needed energy level film resolution.

For the Enerac combustion analyzer, they said it would be difficult to obtain the necessary specification calibration gases of good quality and would prefer to have the calibration gas kit provided. This is an action item, to determine if these gases can be obtained in Kiev to specification and furnished to the power plants. It is necessary to calibrate the analyzer about every three to four months.

If in-situ oxygen analyzers are provided, it is necessary to furnish S.S. tubing since it is very difficult to obtain. They also need the necessary lengths of twisted wire, and interconnecting cables.

119

1.3.5 Thursday, March 2 - travel to Lvivenergo - Burshtyn Power Plant

March 3 through March 7 - In Burshtyn Power Plant

On March 3, we met with the Chief Engineer of the Power Plant. The chief engineer then called in a group of engineers and specialists. We presented our plan and explained the scope of work. We then had all the equipment brought into the chief engineer's office and we set it up and showed it to the specialists.

At noon we met Dr. Osborne and Andrew Parinov (USAID), Darian Diachok, and Andrei Kononov (IDEA) for a few minutes to give a status on successes of the three previous plant visits.

We trained the two assigned boiler engineers for operation of the Enerac. We asked for analyses of the coals being burnt in the plant.

On March 4, we met with Orest Daniluk, Deputy Director. He said one of their biggest problems is losing their technical specialists. Many of the engineers have gone on to work in foreign countries or gone into positions in ministries or government. The present Director in the Ministry of Energy Vilen Semenuk was formerly Chief Engineer at Burshtyn and the present Chief Engineer of Lvivenergo Stephan Melnir was also Chief Engineer at Burshtyn.

On March 6, we were given the analysis for Polsky coal. We calculated the higher heating value (HHV) and programmed the Enerac. We then went to Unit (block) No. 4 to run tests. These units have the dual block Taganrog TP-100 (two boilers per turbine) T-type boilers. We took four flue gas samples at the same locations where the existing Russian extractive type analyzers are connected. Therefore, the "stack" temperature readings are not correct, resulting in invalid efficiency calculation results. However, the flue gas constituent values are directly measured, except CO_2 which is calculated based on fuel analysis and the measured oxygen content. This 200 MW rated unit was burning about 95% Polsky coal with about 5% gas at a maximum derated output of 165 MW. The Enerac readings for oxygen corresponded very close to the oxygen readings from the existing Russian analyzers.

The operators felt quite confident in the O_2 analyzer readings, however, the instruments have to be routinely maintained and calibrated. We then took flue gas samples at the two I.D. fans to compare reading to see how much leakage there was from the air heaters. This unit had the Ljungstrom regenerative air heaters replaced with tubular air heaters during reconstruction. However, all the readings, including oxygen and excess air, indicated significant air inleakage, probably most from ductwork and precipitator leaks.

We then went to Block 5 boilers and took flue gas samples at the same extraction points as the existing oxygen analyzers. These boilers were burning 60% natural gas and 40% mazut, at 95 MW load and reduced steam pressure and temperature. The oxygen levels were high due to somewhat high excess air. The high oxygen readings correlated with the control room

120

readings from the existing extractive oxygen analyzers.

We met with Nikolai Kobyev, Deputy Chief Engineers for reconstruction and Development, to discuss the priorities for instrumentation needs as identified during previous trip. The same issue about natural gas heat content at other power plants was raised and we were given data for 1994 showing the Gasprom values and Burshtyn laboratory values. The data indicates that they are not receiving the fuel energy that they are paying for. Although an on-line gas calorimeter does not contribute directly to improving "combustion" efficiency, it may be a tool for recording actual gas energy consumption and reduction of payments for imported gas.

We talked about the problem of the existing extractive oxygen analyzers requiring so much maintenance and calibration. Because of a previous discovery that the shunt line from backpass to I.D. fan was filled with acidic sludge, and fouled the analyzers, we suggested to Nickolai that maybe two couplings could be welded on the shunt line bend near the backpass to inject steam to flush the sludge in the pipe by high velocity into the backpass to clear the holes in the pipe, and to the I.D. fan duct connection. They should disconnect the sample hose to analyzer before flushing the line. Nicolai thinks this is a good idea and said they will try this on one boiler He thinks that instead of buying new in-situ oxygen analyzers, the money can be better spent on more important and useful instruments. They have received four of new improved but similar design analyzers manufactured in Kiev, which will be installed on Unit 3 which is presently under reconstruction.

On March 7, we again met with Nickolai to continue our discussions on priorities of necessary instruments. We talked about a possible way to measure pulverized coal feed from the bunkers to the burners by counting revolutions of the rotory feeders and totalizing electronically since these are volumetric feeders. Since the rotary plates wear over time, the question is of how much the accuracy would deteriorate over time. Nicolai thought this might be a good idea to look into further, and would be a lot less expensive than putting weight transducers on the two belt feeders from the raw coal bunkers to the pulverizers.

Nickolai was the person who during our last trip asked about an ash gauge. We showed him the literature form the three manufacturers of the dual gamma nuclear gauges and the budget pricing. He described their existing sampling and analysis system and procedures.

In 1994 they paid 2.2 billion KRB ($24,000) in fines for emissions based on the delivery analyses of sulfur in coal and mazut and then calculating SO_2 and SO_3 concentrations in mass flow of flue gas based on boiler loads. The calculated results are only educated estimates at best based on the accuracy of sulfur contents variations over time and estimates of the tons of coal burned. They have a Zeigler CEM installed for No. 3 stack (Units 1, 4, 9, 10, 11, 12) which was purchased by the Ministry in U.S.A. and installed by MLV, an Austrian company, and the power plant paid for it. They cannot use it now because they need about $4000 to $6000 to purchase calibration gases and pay for renewal of the service contract. They also have a one year old German manufacture IMR combustion analyzer similar to the Enerac, except conforming to European standards using the Seigert equation. They need a new oxygen sensor,

121

which typically for all electro-chemical oxygen cells last about one year. They also need the special calibration gases and service on the analyzer.

They also placed a high priority on getting better level gauges on four main mazut storage tanks to measure deliveries and consumption of mazut. The present level instruments are pressure transducers near tank bottom, indicating level based on height and density of liquid. The gauges are not very accurate due to variations of density of mazut and water content and plugging of the tank nozzles with crud.

New ultrasonic level instruments would provide accurate level readings, and are not that expensive.

They found the heat spy to be so useful that they would like to obtain a second instrument to be used by their electrical maintenance engineers to locate hot spots in switchgear contacts, transformers, motors and generators. They also asked about vacuum leak detector instrumentation and techniques for identifying and locating condenser vacuum leaks.

1.3.6 On March 8, we left Bursktyn for Kiev. On March 9, debriefing was held with Dr. Osborne, Darian Diachok, Andrew Parinov and Andryi Kononov, and Tom Kerney of the World Bank, to participate in completion of filming of a TV documentary on the USAID and World Bank roles in the Ukraine energy program.

TRIP REPORT

Delivery Order No 6 - Energy Efficiency and Reliability, Ukraine
Subtask 2.3 - Implementation Phase (Follow-up Visit)
July 21 to August 9, 1997

INTRODUCTION

USAID has provided funds for Burns and Roe Enterprises, Inc to procure and supply energy efficiency instruments and perform plant audit visits at seven Ukrainian Thermal Power Plants. The objective of these visits has been to improve combustion and boiler efficiencies, improve monitoring and energy management

During February - March of 1995, each plant was provided with an Enerac combustion analyzer, a laptop computer and printer, an infrared thermometer and a Fluke power analyzer

Burns and Roe engineers conducted follow-up visits and training during July 22 - August 16 in Ukraine in accordance with the Delivery Order objectives The following report describes the activities of John E Hallberg, P E and Alexander Filippov who visited Krivoi Rog TPP, Simferopol CHP Plant, Odessa CHP Plant and Burshtyn TPP A report describing the activities of George Keller, P E who visited Zmiev, Uglegorsk and Kourakhovska Power Plants is issued separately

WORK PLAN

For each power plant

1. Review the steps taken by the plant for implementation of recommendations and assist in completion
2. Provide additional training and assistance on installation and use of the equipment
3. Refine and finalize the audit report and the recommendations for short and long term actions based on follow-up discussions with power plant personnel and minor additional audit work, if necessary.
4. Measure actual energy savings based on audit recommendations and equipment installation, if measurements are not possible, estimate and provide the rationale of the method that is used for estimation

TRIP REPORT AND RESULTS

Mon & Tue, July 21-22, 1997 - Travel to Kiev, Ukraine
Wed, July 23, 1997 - Travel to Krivoi Rog (Zelenodolsk)
Thr & Fri, July 24-25, 1997 - In Krivoi/Rog TPP

PERSONS MET DURING MEETINGS

Vladimir F Soroka - Chief Engineer (new)
Peter Solovey - Chief of Maintenance Department
Rjabokon Nikolay - Deputy Chief of Automation

123

Vladimir Pachura - SeniorMaster, Head of Automation Department
Anatolij Propopenko - Electrical Specialist
Vasily Bokiy - Infrared Thermometer
Andrey Kolobayev - Fluke power analyzer, Ultrasonic flow meter

INSTRUMENTS SUPPLIED TO KRIVOI ROG TPP

Zirtek oxygen analyzers, 4 probes for 2 boilers, 2-two channel analyzers
Panametrics two channel ultrasonic flow meter
Instromet natural gas chromatograph, display unit and accessories
Oxygen cell and consumables for Enerac

DISCUSSION

Of all the personal contacts made in February, 1995, we met only one person, Peter Solovey - Chief of Maintenance Department The former Chief Engineer, Vladimir Luchnikov was promoted two years ago to First Deputy Minister of Energy in Kiev. The new Chief Engineer - Vladimer Soroka was promoted from the Boiler Department He was very busy and did not seem to be familiar with the work we were doing

There is a Canadian company at the plant working on "Group Project Implementation", a $260 million World Bank loan for rehabilitation of Units 6, 7 & 8 It was said that they are preparing tenders This firm has installed a satellite system for telephone, fax and E-mail

They find the Enerac combustion analyzer to be very good compared to other instruments However, they do not see any advantages to use it effectively in this plant on the supercritical boilers, as there are no appropriate measuring ports They claim that the instrument is expensive to maintain, requiring calibration every three months, with a calibration gas kit which they do not have Also, the oxygen sensor must be replaced every year They recently received a new sensor, but haven't installed it yet because they cannot calibrate it (supplemental calibration gas kits have been reordered for each plant)

The infrared thermometer is used a lot in the Electrical Department for checking contacts Mechanical technicians use it on generator and turbine where they cannot measure direct It is used for routine maintenance measuring hot spots on bus connections, at distribution substation, on motors, bearings, transformer bushings, insulators, etc They now use the infrared thermometer in place of manual hand test for rotor and stator "hot spots". They also use it on heat exchangers to find scale and sludge build-up in heat exchangers

Sometimes the technical people will not believe the instruments, but will trust their experience or hand or senses An example is for coal mill bearings where many have been destroyed, but the infrared thermometer can find hot spots quickly and save a lot of money. It would be very useful for operations to have this instrument, everybody who needs it, instead of one man It would be best for each control room to have one

Last Monday, 21 July, they started using the Panametrics ultrasonic flow meter to measure

124

cooling water flow to condensers Next they plan to measure boiler feedwater and district heating water flow rates. They recognize many opportunities for using this instrument to save energy The most important use is for balancing the district heating demand load

A practical example we observed was to measure the flow rates of 25 cu m/sec through a filter with new media installed The chemists said flow rate would decrease due to increased pressure drop, but there was no way to check it In a matter of a few minutes, the specialist confirmed the flow rate with the ultrasonic flow meter

Another example is where they plan to check mazut flow to quantify measurement differences and losses. This morning they could not account for 80 tonnes of mazut burned in three boilers, how much per boiler and why Was it easier to burn the mazut than poor coal in one of the boilers, or was the coal unusually bad that night?

They requested technical literature on doppler ultrasonic flow meters for use in open channel flow measurements in cooling water flumes

They installed oxygen analyzer probes on the base loaded Unit 1 dual boilers, two probes per boiler with signals to two dual channel analyzers installed in the control room behind the main panel Jerry Harger from Zirtek commissioned the instruments in June and trained the personnel

During startup, one electronic board failed and Zirtek replaced it Out of 8 probes (4 spare), four were damaged, the ceramic broken One analog output for the plotter failed after Jerry Harger left The analog outputs are connected to their strip recorders They plan to move the analyzers (display) to the front panel as operators become confident in readings The oxygen readings were averaging about 4%, temperature about 700°C Air heater temperature as about 500°C +

Reference air for the probes is temporarily supplied from compressed air cylinders, good for one week The only compressed air available is plant air which is wet and dirty with oil They plan to install a coalescer and filters

Positive advantage of the zirconium oxide probes is that they are "ten times less maintenance" and very stable Two maintenance technicians work full time on the Soviet made paramagnetic oxygen analyzers to repair and adjust them Every morning they have to blow down, clean and adjust them on all the boilers, and whenever operators call them to check on erratic readings

The Instromet Encal Gas Chromatograph was received in May and they had not yet installed it We looked at the instrument in the shop and answered questions about connections They have been studying the Russian language manuals

We went to the natural gas metering substation to look at where they planned to install the

125

chromatograph They believe the control house is too small and want to build a new 3m x 3m brick building, but have no money They are concerned about regulations, safety and maintenance They will take the sample line off of main before orifice run They are planning to install display control unit in laboratory After much discussion, they think they can clean up the control house and install GC in there by August 8.

The employees haven't been paid until today, 25 August, 30% of their December 1996 salary The plant could not even find enough money to buy milk for the kindergarten children They need money to buy freon for the turbine building overhead crane cab air conditioner, where temperature reaches 120°F

It is hard to get people motivated, even though they are highly skilled and experienced The plant still generates power when they can get enough fuel, and do not get paid for the power It is a catch-22 situation where they know they need modern instruments to measure and analyze fuels to save large sums of money and energy, but no money to even buy spare parts and supplies

We did not get information on results from using the Fluke power analyzer as the specialist was said to be on vacation

Sat, July 26, 1997 - Travel to Simferopol
Sun, July 27, 1997 - Rest and writing notes
Mon and Tues, July 28-29, 1997 - In Simferopol CHP Plant

PERSONS MET DURING MEETINGS:
Anatoliy K. Voronovskiy - Chairman of the Board, Director, Krimenergo
Alexander Chuprinko - Director of Simferopol Power Plant
Vladimir Cherkosov - Chief Engineer
Vasily V Kurinnoy - Worked at all seven power plants
Valery Babichev - Chief of Technical Department (computer expert)
Alexander Dubinets - Chief of Electrical Works
Valery Duzhenko - Chief of Electrical Laboratory
Sergey Kojevnikov - Chief of Boiler and Turbine Works
Alexander Litvinov - Chief of Automatic and Measuring Equipment Department

INSTRUMENTS SUPPLIED TO SIMPEROPOL CHP PLANT
Zirtek oxygen analyzers (2) probes for one boiler, one two-channel analyzer
Panametrics two channel ultrasonic transit time flow meter
Panametrics one channel ultrasonic transit time flow meter
Instromet natural gas chromatograph, display control unit and accessories
Oxygen cell and consumables for Enerac

DISCUSSION
Valery Babiehev - Chief of Technical Department is trying to develop a computerized

126

information system for the plant and would like to combine the data from all instruments into one program He has written a program in C-language for downloading data from the Panametrics. He asked where is the program from Panametrics for downloading data to a computer. They use the flow meter every day for measuring hot water flow and mazut flow to boilers

They do not have a program diskette for the Enerac S N 11003252 They used to buy reference gases to calibrate instruments in plant, but now calibrate the Enerac and use it to check other instruments But they cannot use it to plot and analyze data on the printer as described in the manual, and wonder if there is special software to make it work We were given a document showing calculation of efficiency and energy savings of about $34,000 during 1995 using the Enerac We were also given a document from the Central Crimean Regional Department of Environmental Protection regarding a dispute in comparison of inspector using coloremetric burettes to test flu gas vs Enerac readings always being lower and a requirement to do parallel tests with the Donorgres Laboratory "TESTO-33" instrument

The Electrical Department has been using the Fluke power analyzer extensively to measure current, voltage and phase angles with very good results They measure voltage on busses, current on current transformers

The accuracy of the Fluke is higher than measuring equipment in the plant for measuring voltage and current They trust the instrument very much and use it to check other measuring instruments When testing phases on a group of transformers at the gas turbines, they found an unbalance They could perform maintenance on the scheme, but the cost would be higher than the energy losses

They used the Fluke to try to find the weak points in boiler feedwater pump motors and identified that stator winding need to be replaced They also discovered that copper rotor bars end connections were weakening, resulting in losses The problem is that these are old 3 KV motors no longer made, as 6 KV is standard.

They also found a small 200W unbalance of about 20% at administration building where one phase was overloaded and they corrected it. The important lesson is that the Fluke is useful for identifying energy losses

The infrared thermometer Minolta Cyclops is used to check for heat losses from boilers, drum insulation, steam lines, etc They found bad insulation on a stream drum and replaced it They tried to check the accuracy of instrument against a thermocouple and found 40°C difference They do not trust the accuracy, but said they do not have a manual in Russian or table of emissivities We mentioned that the Mikrom manual was translated and should be similar

They used the instrument to find a steam leak under insulation in the main building They

were starting a boiler, 370°C, 40 kg/cm^2 and saw there was a problem, valve was steaming, not normal They measured insulation temperature difference near the valve and found a 10 cm crack on weld of 325 x 24 mm pipe

We went to the power plant control room to look at the Instromet Encal gas chromatograph (GC) display mounted in the main panel Above it is mounted a data logger which can input real time heat content from the GC to record total from metered gas flow At present, they input a fixed value of KCal/cu m

We then went to the gas metering substation to see the GC installation They ran new shielded cable about 3000 ft from GC to control room display control unit They took a sample line from downstream of orifice meter run to control house where GC is mounted on the wall. They added a filter in the sample line with silica gel dissicant for removing moisture and crude from gas sample. All tubing and wiring is installed, waiting for calibration gases to clear customs in Kiev, so the startup engineer can travel to commission the GC Their biggest concern is the need for a spare electronics display board. Attached is a diagram of the system

We went to look at the installation of oxygen analyzers on one of the two large hot water heating boilers The electronic two-channel analyzer display unit was mounted in the boiler control panel They mounted the probes below the observation ports on backpass of the boilers They made up an extra pair of flange-nozzles and installed them in the second boiler so the probes could be switched to that boiler when operating

They mounted the reference air control panel between the two boilers with cable and copper air tubing run to both They found a very small air blower-compressor salvaged from an old hydrogen analyzer, which they mounted inside the cabinet

We were provided with a table of consumption, heating values and prices for natural gas and mazut for 1996-1997, attached In-plant cost to produce electricity is 5 3 Kp/KWh (2 91¢/KWh), and Kremenergo sells at 7 11 Kp/KWh (3 91¢/KWh)

Wed, July 30, 1997 - Travel to Odessa
Thr & Fri, July 31-Aug 1, 1997 - In Odessa CHP Plant

PERSONS MET DURING MEETINGS
George Vukovich- Director
Oleg Yarotski - Chief Engineer - Power Plant
Sergey Donchenko - Chief of Instrumentation
Valerie Gurburov - Equipment Engineer
Antonina Ogorodnikova - Chief Chemist

INSTRUMENTS SUPPLIED TO ODESSA CHP PLANT
Zirtek oxygen analyzers, 2 probes for one boiler, 1 two-channel analyzer

128

Instromet natural gas chromatograph, display control unit, accessories

Silica Analyzer	--	In Customs
Conductivity Meter	--	In Customs
pH meter	--	In Customs
Oil in water analyzer	--	In Customs

DISCUSSION

The power plant is in the process of being transferred to Municipal ownership and control, not privatized. The only instruments to pass Customs clearance were the gas chromatograph (GC) and boiler oxygen analyzers The other instruments are on plant territory one month in custody under Customs control They do not know when released

The Enerac, infrared thermometer and Fluke power analyzer are in the custody and being used by the firm "Energo Naladka (Energy Adjustment) Enterprise"

The Enerac was used intensely until February 1996 when the oxygen cell failed They now have a new cell, but no calibration gas kit or instructions They provided a detailed write-up on its use and energy savings (attached).

The Minolta Cyclops infrared thermometer was used to measure boiler and piping insulation, temperatures of bearings, motors, buss connections to 6 KV, 6-110KV contacts, etc They provided a detailed write-up on its use (attached).

We could not get any information about use of the Fluke power analyzer or results They provided a letter that did not give any real descriptions of its usefulness

We looked at installation of the oxygen probes and reference air cabinet at about 24 m elevation They used an old soft drink dispenser cabinet, modified the compressor for air, added an accumulator tank and filter and mounted the control air cabinet inside it They also found some additional copper tubing from salvage The analyzer display unit is mounted in the main boiler control panel, with a cutout for mounting a strip chart recorder.

It was decided to mount the Instromet Encal gas chromatograph in the chemical lab since there is a sample line already installed The GC cabinet is mounted on the wall, display control unit sitting on a desk, and electrical outlets installed No tubing was installed, but can be quickly completed There was a lot of discussion whether the GC should be installed at the gas metering substation

They have a data logging system similar to Simferopol scheme, except they used a Pentium computer for logging

We were provided a list of data for gas and mazut consumption, heat contents and prices

In Plant Cost to Produce	Import Power	Annual Ave. Cost	Avg. Sell
Winter - 3 Kp/KWh (1 65¢)	6 5 Kp/KWh (3 57¢)	6 5 Kp/KWh (3 57¢)	8
Summer - 20 Kp/KWh (10 9¢)	6 5 Kp/KWh (3 57¢)	6.5 Kp/KWh (3 57¢)	8

ODESSA - 31 July 1997

In the result of the computation modes and elimination of the insulation defects carried with application of instruments Enerac + Cyclops, these were achieved economy of fuel in terms of the condition of fuel (7000 KCal/Kg)

Consumption of Conventional Fuel		Savings
1995	878 tons	0 4%
1996	724 tons	0 4%
1997	222 tons	0 2%

For the period of operation of the gas analyzer Enerac 2000 between March 1995 and December 1996, a brigade team of adjusters and engineers of the Central Research and Technical Department of Odessa Energy Adjustment, there were fulfilled the works that are similar for 9 out of 14 installed boilers

Odessa Heat Power Plant - Mode and ecological and heat and technical tests of the steam boilers KU-1.

1. TP-170, Station #5, 6, 7, and 8 adjustments of the furnace mode, ecological and heat and technical tests with optimization of the harmful substances in the coming out smoke output gases

2. TP-47, Station 10 adjustment of the furnace mode, ecological and heat and chemical adjustment with optimization of exhaust of the harmful substances into the atmosphere in the coming out smoke gases

At the boiler of KU-2

1 GM-50, Station 1, 2, 3 adjustment of the furnace mode, ecological, heat and technical adjustment with optimization of the exhausted harmful substances,

At the boilers of the water heating boiler house of Odessa Heat Power Plant

130

1 PTVM-100, Station 2 - adjustment of the furnace mode, ecological, heat and technical adjustment with optimization of the exhausted harmful substances

At the enterprises of Odessa Heat Supply Network

1. There were carried out ecological, heat and technical tests of the water heating boilers at the following boiler houses

Severnaya-1 - Northern	Boilers PTVM-50, No 1 and 2 Boilers PTVM-100, No 3 and 4
Yuzhnaya-1 - Southern	Boilers PTVM-50, No 1, 2, 3 and 4
Chuboska -	Boilers KBGM-50, No. 3 and 5

Besides on the steam boilers of Odessa Steam Power Plant they regularly carried out work aimed at correcting the mode guidelines after a long term non-operation of the equipment, in case of operating the boilers, on a combined fuel (gas + mazut), determination of the operation characteristics of the boilers on the ground of the results of the gas analysis (leakages along the gas path of boiler) There were also carried out express tests of the boilers before their repair and after repairing to evaluate the fulfilled repair works

CONCLUSIONS

During the period of operation of the instrument Enerac 2000, the specialists from the group for adjustment of the heat and technical equipment of Enterprise Adjustment one can come to the following conclusions·

- Operation of the instrument for determination and adjustment of the optimal combustion mode for a set load gives reduction of the working time by 50-60%

- The efficiency of carrying out of adjustment and regulation (controlling) of the furnace process as the boiler is rising on account of reduction of the time for making samples, and it increases the capacity of the boiler by 0 8 - 1 2% due to the precision of the instrument readings

- Work with the instrument Enerac 2000 is of large effect in the work of the operations people of the boilers concerning corrections of the furnace mode when working in the non-stationary modes of the boiler work, as well as it gives a large reduction of time when fulfilling the mode and adjustment and also ecological and heat and technical tests of a boiler with the aim of making the mode guidelines as well as the ecological and heat and technical characteristics of the boiler

Remarks (or comments) (concerning the organization and service maintenance)

131

- A low life time resource of the oxygen sensor life (1 year)
  Service maintenance is not available
  (they were talking about having a representative in Moscow, but from the standpoint of Ukraine, that is another country abroad, another currency and problem of logistics Should have representative in Kiev or another large city)
- The instrument has not been registered or certified with the State Standards of Ukraine

REVIEW ON FUNCTIONING OF METER CYCLOPS 300AF/300

The instrument is used for precise measurement of the temperatures of surfaces without direct contact with the medium in the range from -50 to 1000°C The adjustment people of the enterprise "Odessa Energo Naladka" used the instrument for the following purposes:

1. Measuring temperatures of the outside surfaces of the cover boiler aggregates at Odessa Heat Power Center to determine the heat losses into the surroundings

2 Measuring temperatures of surfaces, insulation of the steam and hot water pipelines for restoring and repairing the heat insulation of the pipelines

3 To check the temperatures of heating the cases of the bearings of the rotating mechanisms and the temperature of heating the motors

4 To check the temperatures of connections of the buss lines in the distributive devices with the voltage of 0 4-6 KV

5 To check the temperature of connections of the buss lines of open distributing devices with the voltages of 6-110 KV, at transforming substations

Usage of the instrument cyclops 300AI/900 resulted in identification of the places of damaging the outside cover of the boilers and insulation of the pipelines Elimination of damaging of the cover and restoration of the pipeline insulation made in due time resulted in reduction of the heat losses into the environment from 0 05-0 15%

Checking of temperatures of the bearings in rotating mechanisms (fans, smoke suckers (I D Fans), pumps, etc) allowed to replace them in due time preventing getting of the equipment out of order

The systematic checking of the temperature of the connections of buss in the distributing devices and at the substations permitted to prevent the emergency situations at the Odessa Heat Power Center

CONCLUSIONS

The instrument is reliable and suitable in operation, it has small overall size Providing availability of a printer, its possible to register the readings

132

availability of a printer, its possible to register the readings.

REMARKS

1 The instrument has not been certified with the State Standards of Ukraine

2 Service maintenance is not available

Sat, August 2, 1997 - Travel to Burshtyn
Sun, August 3, 1997 - Rest and Writing
Mon and Tue, August 4-5, 1997 - In Burshtyn Power Plant

PERSONS MET DURING MEETINGS

Vasyl' Bendasiuk - Director (New)
Igor I. Bozenenkow - Deputy Director - Foreign Affairs (Former Director)
Orest Daniluk - Deputy Director - Technical
Nikolay Kobzev - Deputy Chief Engineer for Reconstruction and Development
Gorgory Stepas - Deputy Chief Engineer - Operations
Ivan Berkosha - Chief of Technical Department
Tanasiy Semotyuk - Head of Adjustments Workshop
Mykola Korvotsky - Head of Chemical Workshop - GC
Peter Chopik - Senior Forman Automation Workshop - O_2 Analyzers
Dept of Automatic Control Systems
Michail Zelanovsky - Deputy Chief of Adjustment Dept - Enerac, Infrasec
Yaroslav Pyrihh - Computer Specialist
Nina Kryzhanovskaya - Senior Foreman - Electrical Department

INSTRUMENTS SUPPLIED TO Burshtyn

Zirtek oxygen analyzers, 2 probes for one T-boiler, 1 two-channel analyzer
Panametrics two channel ultrasonic transit time flow meter
Instromet natural gas chromatograph, display control unit and accessories
Oxygen cell and consumables for Enerac

DISCUSSION

There have been significant management changes and financial problems at this power plant which seem to have had a negative effect on employee morale and successful results with USAID energy efficiency and monitoring instrumentation

The new Director, Vasyl' Bendasivk, came from Dobrotvotor APP 900 MW power plant There was a fluidized bed boiler project at that plant which is no longer operating The former Director is now Deputy Director of Foreign Affairs There seems to be a lot of political in-fighting and lack of support for highly skilled and experienced technical specialists wanting to see progressive improvements made

They are in the process of another organizational change in Lvivenergo where 300 new

paid December salary.

It is difficult for employees to be motivated when last week they received only 20% of their February salary The power that the plant generates for domestic and export consumption is paid for in bartered goods, not cash

About the Enerac combustion analyzer, they asked why the manual has detailed instructions for plotting and emissions analysis, but the instrument says "no function" The built-in printer is supposed to print curves, but it does not work They can only get plots on computer screen by using Enercomp for Windows They had discussions with Uglegorsk power plant about the Enerac Also, the refresh diskette is a 5 25 in floppy, whereas the TI laptop has a 3 5 in drive Enerac S N 11003249 They used it for a while to measure CO_2 and NO_X in flue gas.

They also have a German IMR combustion analyzer (1994) similar to Enerac, which also needs an oxygen sensor, calibration gases and service, but no money to purchase.

They report that the Zeigler UNICON CEM system installed on stack No 3 several years ago is still non-functional because they need calibration gases The probe in stack is damaged because of lack of use and no maintenance. They said $455,000 was wasted They said the amount of fines for emissions has decreased because the number of units operating has decreased Fees (fines?) paid for emissions in 1996

Emissions	Hrvina	
Soot	212,588	
Sulfur Anhydride	459,107	
NO_X	76,352	
CO	4,538	
V_2O_5	404	
	752,989	$413,732

They also have a flue gas analyzer ANALIT-PRIBOR which was manufactured in Kiev It is reported to be a microprocessor type photo sensitive spectrum analyzer measuring CO_2, CO, SO_2, NO_X, NO, NO_2, and having a long life The instrument is not portable, but compact in size and easily moved It was installed on Unit 9 for awhile near I D fan, but removed because it was getting damaged in the dirty atmosphere

The infrared thermometer was used up until six months ago to find problems, but batteries died and they cannot find 2 Hrvina ($1 10) to buy four new ones The electrician used it to check a large "fuse" on a transmission tower which was overheating from a short circuit and could have been a serious safety incident They used it to check insulation and covers on boiler burners They also used it to find and repair insulation on steam lines from boilers They did not seem to be aware of other uses for checking temperatures of motors, bearings, contacts, etc The electricians apparently refused to use it

134

The infrared thermometer was used up until six months ago to find problems, but batteries died and they cannot find 2 Hrvina ($1 10) to buy four new ones The electrician used it to check a large "fuse" on a transmission tower which was overheating from a short circuit and could have been a serious safety incident They used it to check insulation and covers on boiler burners They also used it to find and repair insulation on steam lines from boilers They did not seem to be aware of other uses for checking temperatures of motors, bearings, contacts, etc. The electricians apparently refused to use it

They recently received the Panametrics two-channel ultrasonic flow meter and training on how to use it The technical specialist has studied the manual and plans to use it for measuring mazut

The Fluke power analyzer is being used for measurements only in secondary circuits up to 100V, 0 2, 0 3, 0 5 amp A more suitable application would be in primary circuits It has been useful for preparing current phase diagrams and use in HV switchyard circuits for checking measurements from current and voltage transformers.

They know that harmonics from large motors are a serious problem and the Fluke would be a valuable instrument for analyzing, but it is not the responsibility of their department

The Instromet gas chromatograph has not yet been installed because of financial problems, and trying to decide where it should be located They said there is no space in the natural gas metering substation control house, and have decided to remodel a secure room near Unit 2 They have a contract with another organization to install about 50m of sample line from the main gas distribution line to boiler room They will raise walls to ceiling to enclose room and provide insulation They were asked where they will vent sample and calibration gases to atmosphere and where KCal output signal would be integrated with meter station flow, pressure and temperature logging on computer They do not yet know. The instrument and accessories are still packed in boxes and it is questionable if equipment will be installed and commissioned by the end of August

The two Zirtek oxygen probes are installed on Unit 3 boiler angled downward above a burner on each side This is not a good location because of the possibility of flame impingement and high temperature and slag damage Zirtek engineer recommended location higher up in radiant section in fire box Recommended temperature range for zirconium oxide cell long term performance is 600 to about 1200°C

The reason probes were installed on Unit 3 is the fuel split is about 90% coal, 5% gas and 5% mazut and burner design results in unstable flame and inefficient combustion During the commissioning test, oxygen was measured at 11-12% and 870-900°C The boiler is presently shut down for repairs

Some of the experts wanted to install probes the same way at all 16 burners Our impression is that they do not want to relocate the probes higher in the furnace

135

but recognition of the creativity and innovation of many talented specialists which can go a long way to help solve problems and improve energy efficiency in many small ways in the Burshtyn power plant

Wed, August 6,1997 - Travel to Kiev
Thur & Fri, August 7-8, 1997 - Kiev meetings, trip report
Sat, August 9, 1997 - Travel to USA

136

State Committee of the Autonomous Crimean Republic for the Environment and Natural Resources Protection
The Central Crimean Regional Department for Nature Protection

March 12-25 1997

"Krymenergo" GAEK
Ministry for Power Engineering of Ukraine
74, Kievskaya Str.
Account 221902 in "Pzominvest Bank" kRB
MFO 324430, OKPO 00131400

Statement of Checking How the Legislation on Water Protected Facilities is Observed

I, the State Inspector at the Central Crimean Regional Natural Protection Office, Ms I P Shcherbakova, in the presence of the representatives from "Krymenergo" GAEK - Engineer of the Industrial & Technical Department, Ms O Yu Valia-Yeva, Senior Engineer from Simferopol HPP, Ms V.N Cherkassova, have carried out checking how the legislation on the water protected facilities is observed at the Heat Power Plant named after V I Lenin, the latter being an independent structural unit within "Krymenergo" GAEK (the provisions on the structural unit of December 1, 1995) The checking has been performed on the ground of the Law of Ukraine "on the natural environment protection" The checking resulted in finding out the following

In 1996, at Simferopol HPP, there was produced

- Power energy - 294,713 MW - h
- Heat energy - 350,976 Gcal
- Reactive energy - 72,724 8 MVar

Between January and February in 1997, there was produced

- Power energy - 57,557 MW - h
- Heat energy - 132,276 Gcal

The consumption of fuel in 1996 was

- Natural gas - 123,336 thousand m^3
- mazut - 9,891 ton

at the average sulfur content of 1.7%

137

In January 1997, there was consumed·

- of the natural gas - 18,812 thousand m^3 at the lowest fuel combustion heat Q = 7,800 KCal/m^3

- of mazut - 0 ton

At the moment of the inspection, there are in operation

- two power boilers - BKZ-160-100FB
- one water heating boiler KVGM-100
- a steam turbine T-34155-90
- a generator at No 3 in the synchronous compensater mode

The gas and turbine plants do not function due to the absence of the fuel

The enterprise was given the developed and approved standards of MAE levels valid until January 1, 1998 Until the same date, there is valid the permission to release the harmful substances into the atmosphere in the amount of 3,893 086 ton/yr (887 286 g/s)

According to the report - 2TP-air in 1996, the exhausts amounted to 761 610 t/yr, including there

- the mazut ash - 4 930 ton/yr;
- sulfur anhydride - 354 930 ton/yr,
- nitrogen dioxide - 401 760 ton/yr

The others include - the mazut ash (4 920 ton/yr)

The standards concerning the maximum admitted exhausts by each boiler when working on mazut set the exhausts of the mazut ash in recalculation on the vanadium pentaoxide The quantity of the given substance is determined by calculation, but in Chapter 2 of the Report 2TP-air is not specified for the given substance

According to an agreement with DONORGRES, there is fulfilled each quarter inventory of the exhausts sources given by each boiler with submitting a statement on the efficiency and the exhausts into the atmosphere due to the data from the reports and the instrumental measurements in 1996 the CO_2 content in the flue gases is absent

At the HPP there are monthly calculated exhausts of the harmful substances with taking into account the values of the sulfur content of the fuel determined by the laboratory of the enterprise, and the same is done concerning its lowest combustion heat

138

However, there are no records kept in the register books of the exhausts into the atmosphere, nor is kept the register for the exhausts measurements (the forms of the registers were recommended due to "Instructions for organizing control of the exhausts at a HPP" - RD 34 02 306-88) Enerac-2000 was not used by the laboratory of the HPP during 1996 due to the resource of the oxygen analyzer to be over

On March 18, 1997, the laboratory of the State Committee for the Natural Resources and Environment, p20 - function together with the laboratory of the HPP performed parallel taking samples from the operated boiler systems The laboratory of the State Committee used the national production instrument - "Inspector - 1 - Express-Method", the Laboratory of the HPP used "Enerac-2000

The comparison of the results shows discrepancy between the values concerning the exhausts For example, when the steam boilers BKZ-160-FB on No 1 are being operated, the analytical control instrument registers absence of CO in the fuel gas exhausts (Enerac-2000), the express-method "Inspector" determines their presence on the level of 62 5 mg/m, that is within the process requirements and corresponds to the approved maximum admitted exhausts levels

Analysis for the Boiler BKZ-160-100FB at No 3 was not performed by the laboratory of the State Natural Protection Committee due to the mismatching the sample-taking holes

In the exhausts of the water heating boiler KVGM-100 at No 1, measurements with both the instruments show presence of CO, the values determined by the laboratory of the State Committee is higher in this case too than those determined by the HPP

The values for the nitrogen oxide exhausts are practically the same, except for the exhausts from BKZ-160-100FB at No 1, the reading from Enerac-2000 is 102.5 mg/m^3, the reading from "Inspector" is 150 mg/m^3 The results of the checking measurements are attached

As the method of "Inspector 1" is a test-method, it is suggested to carry out two parallel measurements by Enerac-2000 and using the instruments "TESTO-33" from the laboratory of DONORGRES The results shall be in written form submitted to the inspection

Concerning formation and arrangement of the wastes, there has been found as follows

According to the data from the HPP, the territory is made up of three areas with the total area of 26 88 hectares

- 1 - 23 18 he - the industrial area
- 2 - 3 09 he - the ash-dumping area
- 3 - 0 6 he - an area in the collective orchards zone

In the limits on arrangement of the wastes issued by the State Committee for the Natural

139

Protection valid for 1997, there were not set the wastes resulting from draining the sewage waters at the ash-dumping area

The construction and installation works office "Krymenergostroi" has not submitted the act on setting the borders of the area in the nature

State Inspector / Signature / I P Shcherbakeva

Persons present at the time of the inspection:

Engineer of "Krymenergo" GAEK O Yu Valiayeva
Chief Engineer of Simferopol HPP V N Cherkesov

On the ground of the above said, there is suggested

1. To make an additional checking of the exhausts of the harmful substances into the atmosphere.

2 To keep records in the register for exhausts and in the register for measurements of the exhausts into the atmosphere - The grounds for that - "Instructions for organization of the control over the exhausts at the HPP" - RD 36 02 306-88

140

ODESSA CHP PLANT
Fuel Consumption

Month	X1000 m^3 Gas			Mazut	
	Consumption	Measured Calories	Contract Calories	Consumption	Calories
1-95	26350	7922	7979	3858	9630
2-95	23373	7907	7865	842	9630
3-95	23224	7894	7953	105	9630
4-95	17588	7872	7959	--	--
5-95	8179	7865	7918	--	--
6-95	1722	7850	7860	1045	9630
7-95	--	--	--	3217	9630
8-95	--	--	--	3173	9750
9-95	284	7850	7922	3810	9750
10-95	10143	7850	7922	407	9750
11-95	16623	7845	7922	2901	9750
12-95	20029	7834	7870	8277	9613
Total	147515	7879	7850	27635	9670

ODESSA CHP PLANT
Fuel Consumption

Month	X1000 m^3 Gas			Mazut	
	Consumption	Measured Calories	Contract Calories	Consumption	Calories
1-96	23557	7870	7946	6947	9530
2-96	20496	7890	7952	4477	9530
3-96	22081	7861	7927	3234	9639
4-96	15165	7820	7870	--	--
5-96	8828	7831	7850	--	--
6-96	6868	7862	7910	1007	9680
7-96	5583	7865	7890	1853	9652
8-96	6955	7865	7910	1117	9530
9-96	3605	8037	7998	50	9530
10-96	2027	8046	7965	1170	9530
11-96	10672	8028	7957	--	--
12-96	21492	8012	7945	51	9530
Total	147329	7902	7967	19906	9567

148

ODESSA CHP PLANT
Fuel Consumption

Month	X1000 m^3 Gas			Mazut	
	Consumption	Measured Calories	Contract Calories	Consumption	Calories
1-97	27380	7996	7924	--	--
2-97	25122	7905	7922	--	--
3-97	20271	7960	7917	--	--
4-97	14130	7927	7945	--	--
5-97	8901	7923	7960	--	--
6-97	7915	7902	7984	--	--
7-97	7705	7907	7995	--	--

Gas \$83/1000 m^3 Mazut \$95 to \$118 per tonne

COAL CONSUMPTION

	1995 P		1996 P	
	B (T)	Q p	*B (T)	Q p
I	379710	7097	367645	4285
II	298164	4393	256612	4210
III	320951	4509	264699	4354
IV	279651	4210	216863	4333
V	309413	3910	254222	4583
VI	319353	4022	255993	4747
VII	288009	3982	260548	4715
VIII	362394	4092	231768	4743
IX	391070	3672	231428	4717
X	419617	3608	229952	4496
XI	344118	3779	247744	4413
XII	311231	4437	268332	4106
Pic	4023711	4037	3085806	4464

NATURAL GAS

	1996 P		1997 P	
	B (T)	Q p	*B (T)	Q p
I	22069	8030	41599	8043
II	15726	8023	14889	8078
III	7813	8040	13023	8125
IV	1178	8030	20083	8115
V	--	--	34271	8100
VI	--	--	36519	8097
VII	--	--	23345	8123
VIII	14068	8098		
IX	25593	8110		
X	17410	8135		
XI	14222	8123		
XII	33175	8130		
PIC	151254	8092		

7/29/97

Simferopol Power Plant

Mazut and Natural Gas Consumption

1996: Total
Gas 123,336,000 Nm^3
Mazut 9891 tons

Heat Content (Average). Gas 7969 Kcal/Nm^3
$83/1000 M^3 Mazut 8767 Kcal/Nm^3

Elec = 5 3 Kopecks/KWH Cost, 7 11 Kopecks/KWH Krimenergo Sells

Month 1996	X1000 Nm^3 Gas			Mazut	
	Consumption	Measured Calories	Contract Calories	Consumption	Price/ton
Jan	13456		7924	279 tons	USD 194
Feb	13203		7879	634 (8660 Kcal)	197
Mar	10472	7858/8076	8796	3063	197
Apr	7258			912	197
May	6806			---	
June	7161	8435	8410	---	
July	9891	8651	8778	246	200
Aug	13478	8736	8875	---	
Sept	8447	8667	8930	1193 (9208 Kcal)	180
Oct	4580	8444	8835	2717	170
Nov	11263	7862	8135	142 (8602 Kcal)	180
Dec	17321	7841	7986	327 (8800 Kcal)	180

Simferopol Power Plant

Mazut and Natural Gas Consumption

Month 1997	X1000 Nm^3 Gas			Mazut	
	Consumption	Measured Calories	Contract Calories	Consumption	Price/ton
Jan	18812	7886	8097	---	185
Feb	17551	7841	7967	301	185
Mar	18526	8092		138	190
Apr	14817	7879		598	190
May	12531	8343		25	190
Jun	12674	8246		---	190

147