PN-ACC-324
97224

BURNS AND ROE ENTERPRISES, INC.

Audit Report
BURSHTYN POWER PLANT
UKRAINE

FINAL

August 1997

Submitted by: **Burns and Roe Enterprises, Inc.**

Submitted to: **U.S. Agency for International Development**

Contract No.: **CCN-0002-Q-00-3154-00**
Energy Efficiency and Market Reform Project
Delivery Order No. 6, Task 2
Power Plants Combustion Efficiency

W O 5906-02

Delivery Order No. 6
Energy Efficiency and Reliability - Ukraine
Task 2 - Power Plants Combustion Efficiency

Final Audit Report
Burshtyn Power Plant

August 1997

Prepared by: John E. Hallberg, P.E.
Alexander Filippov (Kiev)
Burns and Roe Enterprises, Inc.
800 Kinderkamack Road
Oradell, NJ

Prepared for U.S. Agency for International Development
Washington, D.C. 20523-1415

Burns and Roe Enterprises, Inc.
1400 K Street, NW, Suite 1050, Washington, D C 20005
Telephone (202) 408-6831 Facsimile (202) 408-6835

b

COMBUSTION EFFICIENCY AUDIT REPORT
UKRAINIAN POWER PLANTS
BURSHTYN POWER PLANT

TABLE OF CONTENTS

		Page
1.0	EXECUTIVE SUMMARY	1
1.1	Introduction	1
1.2	Principal Findings	1
1.3	Recommendations	2
2.0	BACKGROUND	3
2.1	Objectives of Energy Saving Program	3
2.2	Purpose of the Audit	4
3.0	DESCRIPTION OF POWER PLANT	4
3.1	General Description	4
3.2	Boiler Plant	4
3.3	Coal Handling	5
3.4	Mazut Supply	5
3.5	Gas Supply	5
3.6	Boiler Efficiency Calculations	5
3.7	Process Control System	5
3.8	Environmental Issues	6
3.9	Future Plans	6
3.10	Inspection, Assessment, Comments	6
4.0	DESCRIPTION OF AUDIT ACTIVITIES	7
4.1	Specific Audit Activities	7
4.1.1	Scope and Methodology	7
4.1.2	General	8
4.1.3	Boiler Efficiency	8
4 1.4	Boiler Plant	9

TABLE OF CONTENTS (CONTINUED)

4 1 5 Boiler Controls
4 1 6 Boiler Back End Including Stack
4 2 General Audit Activities
4 2 1 Scope and Methodology
4.2 2 Power Plant Audits

5 0 FINDINGS AND RECOMMENDATIONS

5 1 Low-Cost, No-Cost Short Term Opportunities
5.2 Medium and Long-Term Opportunities
5 3 Replicating and Expanding the Program to Other Power Plants

6 0 IMPLEMENTATION PHASE (Follow-up Visit)

6 1 Introduction
6 2 Results and Benefits
6 3 Conclusions

d

APPENDICES

Appendix A-1

Energy Conservation Opportunities (ECO's)

Appendix A-2

Vendor Information

Appendix B

Audit Records

Appendix C

Power Plant Data

Appendix D

List of Contacts Made During Plant Audits

Appendix E

Abbreviations and Units Conversions

Appendix F

Letter of Receipt for Equipment
Energy Audit

Appendix G

References

1 Plant Audit Visits Trip Report, October 1994
2 Preliminary Audit Report, December 1994
3 Plant Audit Visits Trip Report, Team #2, March 1995
4 Follow-up Audit Trip Report, July-August 1997

1.0 EXECUTIVE SUMMARY

1.1 Introduction

The audit team of John Hallberg and Prem Gupta spent five days, March 3 through March 7, 1995 at the Burshtyn power plant, about 90 Km south of LVIV City. They performed the following energy audit as representatives of Burns and Roe Company of Oradell, New Jersey.

The Burshtyn power plant is presently 100% government owned, but is in the process of reorganization for privatization with the government change to a free market economy. The plant consists of twelve 200 MW units. The plant was commissioned between 1965 and 1969 and exports power to eastern Europe.

The coal the station burns is from LVIV coal mines, the Donetsk region, Poland and Ekibastusk. Because of the poor quality of coal, the plant has to co-fire expensive imported mazut and natural gas to support combustion and to reach rated boiler performance. Typically the station fires 80% coal, 10% natural gas, and 10% mazut.

Unit 12 is now under reconstruction including turbine repair, new HP and LP cylinders, and electrostatic precipitator. The Unit 12 boiler has all critical pressure parts and membranes replaced and the steam drum checked, with an expected 20-25 year life extension.

1.2 Principal Findings

Several Energy Conservation Opportunities (ECO's) for the power plant were identified for short term low cost measures and for longer term higher cost measures for large energy savings. The low cost measures include instrumentation for measuring fuel consumption and heating values and for controlling combustion efficiency which would result in short simple payback periods Larger cost long term measures include major combustion control system upgrades, including interlocks and flame safeguard systems, coal, ash and laboratory instruments, and would result in payback periods of about one to three years.

Rehabilitation and reconstruction studies have been completed on this power plant to evaluate the options: (1) life extension of existing units, (2) complete replacement with new power plant, or (3) a mix of life extension presently being done with addition of new units. The objectives are to be able to cleanly burn the existing poor quality coals, remove SO_2 and minimize NO_x formation and increase boiler efficiency and reliability One proposed option is reconstruction with atmospheric circulation fluidized bed (ACFB) boilers.

1.3 Recommendations

Boiler efficiency can be improved, emissions reduced and the life expectancy of the Burshtyn power plant extended based on the recommendations listed in the following Table. The Table summarizes several energy conservation opportunities which will pay for themselves within short periods of time.

An investment of $155,000 in boiler efficiency improvements (ECO-04, 05, 06, 07, 08) will result in an annual savings of $392,500, which corresponds to 6,316 tonnes of coal, 1,286,359 Nm^3 of natural gas and 336 tonnes of mazut. An additional investment of $25,000 in energy conservation programs (ECO-01, 02, 03) may result in an annual savings up to $1,150,000 which corresponds to 18,500 tonnes of coal, 3,769,311 Nm^3 of natural gas and 983 tonnes of mazut.

Many other opportunities exist within the power plant for energy savings which could be the subject of further audits and actions by the plant staff. The energy conservation opportunities also have applications in other power plants.

Summary of Energy Conservation Opportunities (ECOs)

ECO#	Description	Annual Savings in US$ (1995 Prices)	Project Cost in US$ (1995 Prices)	Simple Payback
				Current Energy Prices
01*	Energy Conservation Management Program	$958,000	$25,000 Note 1	< 1 year
02*	Energy Conservation Training Program	$192,000	Note 1	< 1 year
03*	Fuel Quality Improvement Program	See ECO-05	Note 1	< 1 year
04*	In-Situ Oxygen Analyzer One Boiler - 2 Probes	$73,500	$29,000	4.8 Mo.
05*	Laboratory Calorimeter with Proximate Analyzer, Sulfur Analyzer and accessories	$160,000	$35,000	2.6 Mo.
06	Mazut Sonic Flow Meters (4 Req'd)	Included with ECO-04	$16,000	Included with ECO-04
07	On-Line gas calorimeter	$159,000	$35,000	2.6 Mo.
08	Coal Flow Meters	Included with ECO-04	$40,000	Included with ECO-04

NOTE 1: See Section 5 **(*) Highly Recommended**

2.0 BACKGROUND

Twelve Newly Independent States (NIS) emerged from the collapse of the former Soviet Union in 1991. USAID is addressing and managing assistance to these countries through the newly formed Bureau for Europe and the New Independent States (USAID/ENI).

Funding activities in the energy sector supports the cost of technical assistance, training, and limited capital assistance in support of energy-related equipment and cooperation with local institutions.

Ukraine, with a population of 52 million, is considered one of the most energy intensive states. Initial assistance has shown that there are many opportunities to reduce energy consumption and to reduce environmental degradation. The breakup of the Soviet Union has resulted in the cut-off of supplies and spare parts required by the Ukrainian Energy Suppliers, which threatens the reliability of major power plants This situation is compounded by lack of hard currency exchange to pay for needed supplies and fuels.

Most of the thermal power plants are coal fired units that are co-fired with mazut and natural gas, complimented by natural gas and mazut fired units in populated areas.

These units often supply hot water to district heating and steam for industrial use. Decreasing coal supplies and declining quality of coal supplies is affecting the ability of Ukraine to meet its needs for electricity. Also, electricity and district heating supplies are threatened because Ukraine is unable to pay for imported coal, oil and gas at prices approaching world fuel prices

2.1 Objectives of Energy Saving Program

USAID/Kiev has implemented an expanded energy program in Ukraine to enhance the reliability of power generation and reduce dependency on imported oil and gas and improve energy productivity.

The purpose of these efforts will be to provide services and, where appropriate, U.S. and local products, directed toward improving energy and operating efficiencies in power generation, and in the equipment and controls required to use energy efficiently and cost-effectively.

The purpose of the work is to improve boiler efficiency at seven power plants and/or combined power and district heating plants which have been selected by USAID/Kiev in consultation with the Ministry of Energy and Electrification. These plants are fired with natural gas, fuel oil or coal. The objectives are to (1) foster improved management of boiler/ plant operations by identifying and implementing immediately cost-effective "low cost - no cost" efficiency improvements; (2) provide equipment support to implement low-cost operations, improve monitoring and energy management; (3) provide operation training

2.2 Purpose of the Audit

The purpose of the audit was to:

- Assess overall technical and management capabilities, plant energy efficiency, and capital investment decision-making processes for each plant, assess plant procedures for identifying and executing energy saving investments requiring management changes, and capital investment.
- Identify short-term no-cost/low-cost efficiency measures with savings potential and paybacks.
- Provide preliminary identification of longer term energy conservation opportunities (ECO's) requiring larger capital investment.

3.0 DESCRIPTION OF POWER PLANT

3.1 General Description

The station is of 2400 MW capacity employing 12 x 200 MW turbine generators of Leningrad Works manufacturer. The first unit was commissioned in 1965 and the final unit in 1969.

ENERGO SYSTEM:	LVIVENERGO
LOCATION:	90 Km SOUTH OF LVIV
INSTALLED CAPACITY:	2400 MW
	12 x 200 MW
COMMISSIONED:	1965-1969
FUEL:	Coal low-bituminous supplemented by mazut and gas

For a more detailed description of the following items, see the Preliminary Audit Report, issued in December 1994, Reference 1 in Appendix G.

3.2 Boiler Plant

The type TP100 boilers are of Russian manufacturer from the Tagenrog Works The boiler produces steam at a rate of 640 tons per hour at a pressure of 140 bar gauge and live steam temperature of 545°C. Steam from the high pressure turbine exhaust is directed back to the boiler for reheat and returned to the intermediate pressure turbine at a pressure of 28 bar gauge and reheat temperature of 545°C. Feedwater is supplied to the boiler at a temperature of 235°C.

The boiler is of T shape design with a water cooled furnace of tangent tube construction. The

furnace is divided into two by a vertical tube screen in the middle of the furnace. The screen is perpendicular to the axis of the drum and its role is to increase the surface absorbing the heat radiation of the flame. In the upper section of the furnace above the nose are radiant pendant superheaters. In the horizontal passes are reheaters and first stage superheaters and in the vertical passes are reheater regulator stages and economizer. Two Ljungstrom type regenerative air heaters are supplied for air heating purposes on units 2, 3, 6 and 7. All other boilers have pipe air heaters. The boiler operates on a balanced draft principle with air being supplied by 2 off 50% duty centrifugal type forced draft fans and 2 off 50% duty induced draft fans.

3.3 Coal Handling

Coal is supplied to the station from more than 30 suppliers. The coal can go either of two ways· from railroad direct to the coal storage or from railroad direct to station's two conveyors (one plus one reserve). There is a special scale in the railroad track to weigh as-received coal to $\pm .5\%$ accuracy. Mechanical coal samples are taken from the two conveyors and collected every 5 minutes and mixed for 24 hours and analyzed. Coal is then collected for 5 days, mixed and a more detailed analysis completed.

3.4 Mazut Supply

The present level instruments located near the bottom of tanks indicate level based on height and weight of liquid. The readings are not very accurate due to variations of density of mazut and water content and plugging of the tank nozzles with crud. A high priority is placed on getting better level instruments on four main mazut storage tanks to measure deliveries and consumption of mazut. The amount of mazut used for the total power station is determined by measuring the level of the mazut storage tanks per shift.

3.5 Gas Supply

The power station units are supplemented by natural gas when it can be purchased. Natural gas flow meters already exist per boiler and work well.

3.6 Boiler Efficiency Calculations

The methodology for the boiler efficiency calculation is similar to Zmiev, Uglegorsk, Khourakhuvska, Krivoi Rog and other power plants in Ukrainian Power System The calculations are done on a per unit basis. The only fuel measured directly per boiler is the natural gas. All other fuel quantities per boiler are extrapolated from power station data. The quality of the coal is also averaged on a 5 day basis. These efficiencies are compared to the efficiencies calculated based upon the boiler design performance.

3.7 Process Control System

Boilers of the Burshtyn power plant operate in a steady-state mode (base load) with a turbine maintaining throttle pressure, "fixed" firing rate, floating frequency and manually adjusted air flow (fixed settings for leach load). There are four O_2 analyzers per unit which are used to monitor furnace O_2. These analyzers are used by operators to remotely adjust speed of coal

feeders and position of forced draft fan dampers. The fuel to air ratio is manually adjusted based on experience and O_2 analyzer indications. There are no CO analyzers in the power station.

3.8 Environmental Issues

Prior to 1988 all environmental checking was carried out by central group using portable equipment. After 1988 the station has taken over this work. The checks are carried out once per month using portable equipment the location being determined by the prevailing wind direction. The measurements are taken at 2.5km, 5km, 8km, 15km, 20km and 30km distance from the station. Soil and water monitoring is carried out local to station, and the cooling water inlet and outlet conditions are monitored. All water running off the ash dump site is monitored. The test well water is checked for heavy metal contamination. In conjunction with the Kiev Botanical Institute the area up to 30km distance is checked. A lattice network is monitored for ground condition and comparison between areas recorded.

The power plant has made modifications to the boilers to reduce NO_x.

3.9 Future Plans

IMPRESSARIO AGRUPADOS, an engineering consulting firm from Spain conducted a major rehabilitation study in 1993 for EBRD. They evaluated seven alternatives for rehabilitation, including rebuilding boilers and replacing boilers with circulating fluidized bed (CFB) boilers, and gas turbine combined cycle repowering.

The plant is very much interested in learning more about CFB technology as a solution to the problems resulting from poor coal - SO_2, NO_x, and high maintenance on the old Taganrog PC boilers. They are also interested in western technology for instrumentation and control, and want to upgrade the automation on the rehabilitated block 12 as a demonstration project. Experience gained from application of a Distributed Control System (DCS) to block 12 would be applied to the 1995 reconstruction of blocks 11 and 7.

They are planning to add one or two gas fired peaker boilers to meet additional hot water district heating demand from city.

3.10 Inspection, Assessment, Comments

- The station is well managed by experienced personnel. The engineering staff is competent. There is a need for proper analytical equipment to perform to higher standards in a short time.

- The CHP plant management gathers detailed information and performance data on all aspects of the equipment operation and maintenance. Therefore, data on gas and mazut fuel consumption, gross and net KW output, steam and hot water (gcal heat) for monthly (heating periods) and annual basis is easily obtained.

- The station has carried out refurbishment and development work in the past particularly in respect of the burner firing arrangement for reduction of NO_x

- The station has had significant cracking in the inlet nozzle belt area of the turbines and they have replaced the existing unit 12 HP and IP shells and modified steam path blading for the new uprated 225 MW machines offered by the turbine manufacturer.

- Each condenser is cleaned twice per year. At the time of condenser cleaning, there is a loss of condenser vacuum which causes a 5 MW loss in generator output.

- The ion exchange resins in the demineralizer are in such a poor condition that excessive amount of water, acid and caustic are consumed for regeneration which adds to pollution.

- The chemical laboratory ungently needs modern analytical equipment.

- Power plant design work is being done by Ukraine Teploelectroproject, L'VIV Research Institute and Transmission design is being done by Electrosetproject in L'VIV.

4.0 DESCRIPTION OF AUDIT ACTIVITIES

The audit activities included the collection of information and data from various reference sources and individuals working within the power plant. The activities are of two types: one for specific combustion efficiency audit measurements and calculations, and the other for information of a general natural regarding other energy conservation measures.

4.1 Specific Audit Activities

4.1.1 Scope and Methodology

Individual systems and/or equipment were identified for data collection and analysis and were selected based on several criteria, including:

- Quantity of energy used within the system.
- Potential for energy efficiency improvements.
- Significance of system/component to the power plant.
- Potential for replication.

The selection of systems and equipment to audit were made after meeting with power plant specialists to discuss energy conservation priorities and a walk through the power plant. In preparation for the audit activities at the power plant, technical energy monitoring equipment was purchased in the United States, shipped to Kiev and delivered to the power plant. The equipment was purchased to monitor and to make measurements of various systems that were likely to be encountered within the power plant. The measurements enabled auditors to learn specific information about the systems being investigated. Based on the measurements, the auditors calculated boiler efficiency and potential energy improvements that could be gained by installing energy efficiency equipment. Economic paybacks were calculated and the priority of items established according to the shortest payback. Based on estimated cost of equipment and

money available, recommendations were then made as to whether to implement the items studied.

The main components of the equipment are:

- Enerac combustion analyzer
- Portable computer and printer
- Fluke power analyzer
- "Heat Spy" Infrared temperature detector/indicator

Of this equipment, the most significant was the Enerac Combustion Analyzer which showed a potential immediate fuel savings by tuning the boilers to reduce excess combustion air and increase boiler efficiency.

The majority of the equipment was used extensively by the audit team and as a training tool for the plant personnel. Typically, the audit team would separate during the day, with each member responsible for data collection, etc. Each member would usually be accompanied by three to six specialists, for the purpose of observing and answering questions, etc.

4.1.2 General

The Burshtyn power plant was selected by USAID/KIEV in consultation with the Ministry of Energy and Electrification. The Ministry also identified the management of the facility as receptive to this type of program and felt that the maximum benefit could be gained by working at Burshtyn.

4.1.3 Boiler Efficiency

The specific plant audit consisted primarily of on-line flue gas emission measurements using Enerac 2000 portable combustion analyzer, laptop computer and printer. Measurements were made on two boilers, Boiler #4 and Boiler #5 burning coal and natural gas.

The Enerac 2000 portable combustion analyzer is an instrument which has chemical cells to measure oxygen, carbon monoxide, sulfur dioxide, oxides of nitrogen content and combustible gases. The unit also has a type K thermocouple incorporated in the probe to measure the temperature of the gas at the extraction point. The fuel analysis of 15 various typical fuels are contained in the memory of the portable analyzer. Also, custom fuel analysis can be programmed using a laptop computer. **Enerac 2000 portable combustion analyzer calculates, displays and prints boiler efficiency, excess air, CO_2 and emissions.**

Flue gas samples for block 4 boilers were taken at the same locations where the existing Russian extractive type analyzers are connected. Therefore, the "stack" temperature readings are not representative. However, the flue gas constituent O_2 and CO are directly measured, except CO_2 which is calculated based on fuel analysis and the measured oxygen content. This 200 MW rate unit was burning about 95% Polsky coal with about 5% gas at a maximum derated output of 165 MW. The Enerac 2000 portable combustion analyzer readings for oxygen corresponded close to the oxygen readings from the existing Russian analyzers.

Flue gas samples were also taken at the two I.D. fans to compare reading to see how much leakage there was from the air heaters. This unit had the Ljunstgrom regenerative air heaters replaced with tubular heaters during reconstruction. All readings, including oxygen and excess air, indicated significant air inleakage, probably most from ductwork and precipitator leaks.

Flue gas samples for block 5 were taken at the same extraction points where existing oxygen analyzers are connected. These boilers were burning 60% natural gas and 40% mazut, at 95 MW load and reduced steam pressure and temperature. The oxygen levels were high due to somewhat high excess air. The high oxygen readings correlated with the control room readings from the existing extractive oxygen analyzers.

Due to the high in-leakage rates in the furnace, the economizer and the air heater, an on-line calculation of the combustion efficiency by Enerac portable combustion analyzer proved to be not feasible. The efficiency calculated is actually overall boiler efficiency as shown on the printout. Direct measurements of O_2, CO, combustible gases, NO_x, and So_2 appeared to be accurate. Any improvement in the efficiency of the Burshtyn power plant must come primarily from an improvement in overall efficiency of its boilers. On the steam side the Burshtyn power plant is efficient due to a significant thermal load. A copy of the Enerac portable combustion analyzer print-outs can be seen in Appendix B.

For a detailed description of the Audit activities, see the trip report in Appendix G.

Burns and Roe engineers estimated an incremental improvement in boiler efficiency achievable due to a reduction in excess air fed to the boilers. Using a portable combustion analyzer, 5-7% excess furnace oxygen was measured at full load while firing coal and 7-10% excess furnace oxygen at 50% load while firing natural gas. CO emissions were negligible in both cases. Based on calculations, the excess furnace oxygen at full load while firing coal can be reduced by 1% O_2 resulting in an incremental improvement in boiler efficiency of at least 0.24%.

In future the Burshtyn power plant operators should be able to manually adjust the air supply to determine what magnitude of reduction in excess air could be achieved within constrains imposed by CO emissions, smoke, and flame stability Therefore, it is recommended that permanent instruments be installed to measure the O_2 and CO content of the flue gas and thus assist the operators in avoiding unsafe conditions while continually minimizing excess air.

4.1.4 Boiler Plant

Block 12 is now under reconstruction including turbine repair, new HP and LP cylinders, and a new 99% efficient Russian electrostatic precipitator. The next precipitators for block 11 and block 7 reconstruction in 1995 will be Ukrainian manufacturer. The boiler has all critical pressure parts and membranes replaced and the steam drum checked, with an expected 20-25 year life extension. This will restore the rating of block 12 to upgraded 225 MW design and will be finished in April 1995.

4.1.5 Boiler Controls

The boilers have no burner management system and all interlocks are of a very basic design offering limited protection. On the older units, the controls and instruments are obsolete, readings are unstable and require ongoing maintenance to keep operational. Spare parts are difficult to obtain.

Most Boiler control is single loop remote manual from a control board located in a central control room. Operators can adjust gas control valve position, mazut control valve position or rotary vane coal feeder speed so that the quantity of steam is sufficient to maintain turbine load. Operators can also adjust FD and ID fan dampers based on absolute pressure in a furnace, but the four O_2 analyzers per boiler are known to be inaccurate, therefore air flow control is also based on guesswork.

The existing O_2 analyzers of Russian design and manufacturer require frequent maintenance and calibration. The steam boilers flue gas samples are drawn from the backpass after the superheater and before the first stage reheater. Although these analyzers are functional, they are subject to drift and significant lag time as well as inaccurate readings due to air in-leakage. This results in less than optimum control of excess air for efficient combustion which results in waste of fuel.

4.1.6 Boiler Back End Including Stack

The boilers have tubular air heaters, except units 2, 3, 6 and 7 which still have Ljunstrom type regenerative air heaters.

The electrostatic precipitators have low efficiency, possibly due to the fly ash high specific electrical resistivity. Unit 12 has been reconstructed with a new 99% efficiency Russian precipitator.

4.2 General Audit Activities

Information was gathered from existing sources, plant historical operating data and discussions with key personnel. Actual audit activities consisted of taking operating data and test measurements wherever possible and performing analysis based on this data and historical information.

4.2.1 Scope and Methodology

General audit activities included discussions about the entire power plant. Individuals responsible for various tasks within the power plant organization were interviewed to obtain information and data on energy consumption, prices and performance. They were questioned what organizational changes and controls have been implemented to manage energy conservation and efficiency. In addition, the Chief Engineer was requested to provide a description of what recent measures had been taken for improvement of operational efficiency and effective fuel utilization.

4.2.2 Power Plant Audits

The audit activities associated with the total power plant consisted primarily of a review of the various available publications and brochures produced by the various agencies and by the Ministry of Power and Electrification as well as from drawings and diagrams provided by the engineers at the power plant. Much information and insight was also gained through the interviews related to the system specific audits at all levels. Many of the personnel employed in the power plant have had experience in areas other than the one in which they currently work, and this was useful as background material.

5.0 FINDINGS AND RECOMMENDATIONS

5.1 Low-Cost, No-Cost Short Term Opportunities

ECO-01 ENERGY MANAGEMENT CONSERVATION PROGRAM

The Deputy Director is responsible for energy conservation and efficiency improvements at the Burshtyn power plant in addition to his other duties. Because of the shortage of hard currency to pay for imported fuel all of the management is highly motivated to find ways to improve operating efficiencies in order to achieve effective fuel utilization, and all employees are aware of the need for conservation. However, the existing program must be expanded and enhanced with management restructuring and new procedures to prepare for the coming privatization reforms. These changes will help to prepare the plant to be commercially oriented by incorporating western management methods and procedures.

The stated goals for this program, as a minimum, should be emphasized as follows:

- Conserve energy
- Reduce environmental pollution
- Improve operational efficiency
- Improve equipment reliability
- Introduce new technologies

The stated purpose for an expanded energy management program should be to provide a basis for attracting private financing and future investments for a viable enterprise having the potential for success.

As a first step, a highly visible management staff position and/or department should be established reporting to the director and having the responsibility and authority to develop, implement and monitor energy conservation, training, reliability and rehabilitation programs The primary tasks will be coordination, communication, and information. The energy manager should be responsible for knowing about, reviewing and consolidating the findings and recommendations of the numerous studies and reports prepared by consultants and Institutes for the USAID, World Bank, EBRD, EC, Ministries, etc., so as to minimize duplication of work and maximize exchange of information and expertise.

In addition, the energy manager should coordinate and monitor the progress and success of conservation measures implemented by the power plant staff and employees.

In 1994 the Burshtyn power plant consumed the following quantities of fuel

1994 Consumption	1994 Prices		1995 World Prices	
Coal 3,083,276 tonnes	($25/tonne)	$70,081,900	($45/tonne)	$138,747,420
Gas 628,000,000 Nm^3	($15.84/1000 Nm^3)	$ 9,947,240	($50/1000 Nm^3)	$31,400,000
Mazut 163,900 tonnes	($107/tonne)	$17,537,300	($131/tonne)	$21,470,900
		$97,556,440		$191,618,320

If only a modest savings of about 0.5 percent of this fuel expenditure is saved in the first year, $960,000 of expenditures can be justified for measures to improve fuel utilization and efficiency, improve reliability and reduce maintenance.

Some funds should be provided for consulting services to assist the Burshtyn management with training and materials to establish this program under ECO-01, ECO-02, ECO-03.

ECO-02 ENERGY CONSERVATION TRAINING PROGRAM

Many sources of energy waste and loss may seem very obvious and simplistic, and the power plant engineers and specialists are well aware of the cumulative magnitude of these losses However, the staff needs, and should encourage, much more support from all employees in the identification and elimination of many sources of energy loss. Many of the sources of waste may not be known or understood by many of the employees, and this is where the results of a formal training program can have significant energy conservation paybacks. The auditors were informed that the employees already know all about energy conservation. However, it is the auditors observations and measurement results as well as the observations and measurements of other studies which indicate that there are many low cost, no cost opportunities for energy savings, and this is the point of recommending a low cost, no cost energy conservation training program for all employees. Establish procedures, classes, more posters, incentives, rewards, competition, etc. and utilize the expertise of the engineers and specialists to reinforce the importance of energy savings. If only one tenth of one percent of the annual fuel budget can be saved in the first year, $192,000 can be provided for training material.

ECO-03 FUEL QUALITY IMPROVEMENT PROGRAM

The plant must aggressively survey the available coals and take initiative in contracting directly from suppliers. The plant must locate the best fuel considering boiler operational needs,design requirements, pollution control equipment performance and delivered costs. The plant must consider a blending strategy of individual coals to meet the above criteria. The number of coal suppliers must be reduced to a minimum for a better control of blending process.

This program must be coordinated with the requirements for burner modifications and the resultant slagging characteristics on boiler performance as a result of the coal reactivity and ash characteristics.

As a result of better coal quality and consistent ash and moisture characteristics, significant savings of fuel and maintenance costs will be realized.

ECO-04 IN-SITU O_2 ANALYZERS

The boiler efficiency improvements can be addressed by replacing the existing extractive oxygen analyzers with in-place zirconium oxide sensor analyzers of the type used in the United States. One problem with the existing instruments installed at the plant are that they are extractive rather than in-place. It is difficult to obtain a representative sample by using extractive type analyzer. Also, the instrument can become fouled with acid sludge formed from moisture condensation and soot. United States practice typically places an oxygen sensing probe into the flue gas duct. This technology could be applied to the boilers at Burshtyn.

The possibility of installing in-situ zirconium oxide oxygen probes on at least one unit, two furnaces, one per furnace, two required were discussed.

ECO-05 LABORATORY CALORIMETER WITH PROXIMATE ANALYZER, SULFUR ANALYZER AND ACCESSORIES

The existing sampling and analysis system and procedure is typical of other coal fired plants. There are four main 48" reclaim belts feeding to boiler house. A continuous auger sampler takes a coal sample from each operating belt to a 1 m^3 sample bunker. Every 24 hours a sample composite is taken to the laboratory for testing for ash and moisture, and every five days the heat content in Kcal/Kg is tested. They have the capability to measure sulfur by the titrametric method on the calorimeter ash residue.

They also sample every third car at the car dumper to test ash and moisture content of coal deliveries from the mines. It takes 24 hours to run all of these samples and the laboratory is a continuous operation. They need a new, modern calorimeter which will speed up the analyses of coal and mazut for heat content, providing automatic control of operation and computer interface for data storage, with better accuracy than the old manual operated calorimeters. These modern calorimeters can run a sample in 10 to 20 minutes and would free up at least one laboratory specialist to work on other tasks.

They could see the advantages of having nuclear dual gamma ash gage on the coal conveyors going to the boilers. This instrument could give real time readouts of percentage ash and moisture, which would allow the operators to choose the mode of operation of boilers to adjust for changes in moisture, ash content and volatiles. Considering the cost, it is recommended to furnish fuel laboratory instruments to determine proximate analyses (fixed carbon, volatiles, ash, moisture, sulfur), heating value and ash fusion temperature. If they can register these instruments with the National Standardization committee, they will be able to improve testing of coal deliveries to substantiate claims to suppliers for deficiencies in quality

Fines for emissions are based on the delivery analyses of sulfur in coal and mazut and then calculating SO_2 and SO_3 concentrations in mass flow of flue gas based on boiler loads. The fines for thermal power plants are only ten percent of the fines levied on industrial emitters. The calculated results are only educated estimates at best based on the accuracy of sulfur contents variations over time and estimates of the tons of coal burned. More accurate and frequent analyses would help to improve the data required for calculating emissions from the boilers used in determining fines.

These instruments would result in improved control of fuel procurement, coal yard management for blending and quality control and more consistent ash and moisture contents going to the boilers. The savings are difficult to estimate, but would be realized in improvements to boiler efficiency, reduced emissions and more stable boiler operation which will reduce maintenance and extend boiler life. If only one-tenth of one percent of the annual fuel (coal and mazut) budget can be saved i.e. $160,000, the payback will be less than three months based on 1995 world fuel cost.

ECO-06 MAZUT SONIC FLOW METERS

The audit team learned through interviews with station personnel that one area which has hampered the stations progress in energy improvements is the inability to accurately measure the decrease in fuel consumption due to any changes in operation or equipment motivated by efficiency improvement This is because the existing fuel flow instruments in place at the station are inaccurate or don't work. If only modest gains in efficiency could be realized due to the incentive provided by the ability to more accurately evaluate such improvements, such flow monitoring equipment could pay for itself in a very short period.

Line sizes and design information were obtained for specifying sonic flow meters for two supply and two return mazut lines serving the boilers.

ECO-07 ON-LINE NATURAL GAS CALORIMETER

The most important concern and priority at Burshtyn was the urgent need for analytical instruments for monitoring fuel quality (coal, mazut, gas). The data indicates that the plants are paying large sums of money for fuel energy content (heating value) which they do not receive. Instruments for measuring the fuel heat value in Kcal/Kg and other parameters would provide the documentation necessary for making claims against suppliers.

They urgently need an on-line gas calorimeter to verify the heat content supplied by Gasprom. Their laboratory calorimeter is not commercial (certified), the tests are not continuous so they cannot make a claim for credits. We were given test results for monthly averages for 1994, as well as gas consumption. The plant claims losses of about 1.905×10^{10} Kcal (7.559×10^{10} BTU's) which results in $159,000 loss per year. Although this loss of expensive gas fuel heating value has nothing directly to do with "combustion" efficiency, this is also a priority in reducing the large sums of hard currency they must pay for fuel gas.

ECO-08 COAL FLOW METER

The audit team learned through interviews with plant personnel that one area which has hampered the plant progress in energy improvements is the inability to accurately measure the decrease in fuel consumption due to any changes in operation or equipment motivated by efficiency improvements. This is because the plant does not have instruments to measure the fuel flow for either mazut and coal to each boiler. Natural gas flow meters already exist per each boiler and work well. If only modest gains in efficiency could be realized due to the incentive provided by the ability to more accurately evaluate such improvements, such flow monitoring equipment could pay to itself in a short period of time. Instruments to measure raw coal consumption to 200 MW Unit #4 on belt conveyors, located between raw coal bunkers and mills (coal feeder) are recommended.

For detailed calculations see Appendix A-1.

5.2 Medium and Long Term Opportunities

COMBUSTION IMPROVEMENT PROGRAM

This is a longer range energy conservation program requiring larger investments of capital which will accomplish larger fuel savings, improvements in efficiency and reliability and life extension of the boilers. It is beyond the scope of this audit to provide details other than enumerate measures which could reduce mazut and gas co-firing by as much as 10-30% and possibly achieve some reduction of NO_x, reduce SO_2 and particulate:

- Improve burner design and combustion air flow configuration and temperature profiles.
- Improve pulverized coal flow to minimize pulsation and excess oxygen variations.
- Repair boiler air leaks.
- Develop new procedures for startup and shutdown cycling based on results of metallurgical testing for creep and fatigue life.
- Continue rehabilitation upgrading of precipitators (electrofilters).
- Consider lime or limestone injection technology for reduction of SO_2, consistent with fuel quality improvement program.
- Upgrade instrumentation for load control, fuel control, combustion air and boiler pressure control.
- Repair and/or replace (asbestos) insulation on boilers.

There are other studies which have been done or are being done, and it is recommended that the results and recommendations be coordinated to prevent overlap or conflicting tasks

MEASURES FOR IMPROVEMENT OF RELIABILITY

Additional equipment items which were requested by the chief engineer and his specialists which are urgently needed for maintaining reliability of the boilers and power plant are listed below:

	DESCRIPTION	COST
1.	Infrared Temperature "Heat spy" used for locating sources of heat loss. Also useful for locating "hot spots" which could lead to equipment failure, such as bearings, motor and generator windings, switchgear contacts, iso-phase bus bar bolting, etc.	$4,000

	DESCRIPTION	COST
2.	Silica Analyzer necessary for measuring demineralizer performance and quality of water being fed to boilers. Silica in steam going to turbines will cause serious damage to blades.	$9,000
3.	Oil Analyzer (laboratory) used for detecting organics breakthrough from makeup water treatment carbon filters before demineralizers. Hydrocarbon contamination of demineralizer resins can cause irreparable damage and reduction of capacity required for boiler feedwater makeup.	$8,000
4.	Dissolved Oxygen Probes (feedwater) a specific ion oxygen probe analyzer is needed for continuous monitoring for control of dissolved oxygen in feedwater to each boiler between 50-250 ppb. ($2,200 each x 12).	$26,400
5.	Oxygen Analyzer (laboratory) as a lower cost alternate to online monitoring, a modern portable oxygen analyzer can be used manually to obtain faster and more accurate readings than present.	$2,500
6.	Conductivity and pH Meter (laboratory) used for testing water quality at water treatment, feedwater and condensate systems.	$1,000
7.	Level Gauges for Four Mazut Tanks Important for measuring deliveries and consumption of fuel.	$10,000
8.	Calibration Gases and Maintenance for Zeigler CEM on No. 3 Stack for measuring emissions from Units 1, 4, 9, 10, 11, 12	$6,000
9.	Distributed Control System for Reconstructed Unit required for upgrading and automating combustion control system to comply with regulations for flame safety, as well as improvement of combustion efficiency as a result of automatic control of fan dampers for combustion air and control valves for fuel to meet load. More rapid response to load changes will result in stable and efficient combustion which help lower maintenance costs.	$350,000
10.	Water Treatment Resins for Demineralizers Required for making high quality makeup water for boilers to prevent damage, as well as to minimize chemical consumption and discharge of regenerant waste.	$1,500,000

5.3 Replicating and Expanding the Program to Other Power Plants

An economic benefit can be derived from extending the demonstration program to other Ukrainian Power Plants. From Burns and Roe experience the Ukrainian Power Plants, when firing coal or coal and mazut, exhibit the following typical characteristics:

- Ukrainian power plants operate in a steady-state mode (base load),with a turbine maintaining throttle pressure, "fixed" firing rate, floating frequency and manually adjusted air flow (fixed settings for each load).

- Very high in-leakage rates (up to 100%) are typical, which make readings of any oxygen analyzer dependent on its location (distance from the furnace). They also make impossible on-line calculation of the combustion efficiency at the back end of the boiler. What is calculated by the Enerac is boiler efficiency.

- Most of the oxygen analyzers are of the extractive/paramagnetic type, with questionable accuracy and a measurement time constant on the order of about 1-2 minutes. As a result, they cannot be used for real time excess air control.

- Low carbon monoxide levels (10 to 100 ppm) in the flue gas in combination with 4 to 5% oxygen in locations with 850-870 Degree Centigrade temperature leads us to believe that combustion efficiency of the Ukrainian Power Plants can be improved. In our estimation, the improvement will be on the order of 0.5% to 1%.

The conclusions are as follows:

- Excess air can be reduced until a maximum of 300-400 ppm of carbon monoxide is generated which is indicative of efficient coal combustion.

- Considerable economic benefit can be realized by reducing the excess oxygen by 1-1.25% and achieve 0.5% improvement in combustion efficiency even with existing manual control of the combustion process. It is important that constant operator attention is maintained. Such attention can be obtained by way of operator incentives based on the fuel savings. Another alternative would be to invest in expensive automatic control for the excess air system.

- Savings can be achieved more easily with carbon monoxide measurements of the undiluted flue gas at different boiler loads

- Improvements in boiler efficiencies and reductions in fuel consumption can be further demonstrated by replicating and expanding the portable combustion analyzer program to other Ukrainian power plants.

6.0 IMPLEMENTATION PHASE (Follow-up Visit)

Burns and Roe engineers conducted follow-up visits and training during July 22 - August 16 in Ukraine in accordance with the Delivery Order objectives The following report describes the activities of John E Hallberg, P E , who visited Burshtyn on Monday and Tuesday, August 4-5, 1997

6.1 Introduction

WORK PLAN

For the power plant

1 Review the steps taken by the plant for implementation of recommendations and assist in completion
2 Provide additional training and assistance on installation and use of the equipment
3 Refine and finalize the audit report and the recommendations for short and long term actions based on follow-up discussions with power plant personnel and minor additional audit work, if necessary
4 Measure actual energy savings based on audit recommendations and equipment installation, if measurements are not possible, estimate and provide the rationale of the method that is used for estimation

PERSONS MET DURING MEETINGS

Vasyl' Bendasiuk - Director (New)
Igor I Bozenenkow - Deputy Director - Foreign Affairs (Former Director)
Orest Daniluk - Deputy Director - Technical
Nikolay Kobzev - Deputy Chief Engineer for Reconstruction and Development
Gorgory Stepas - Deputy Chief Engineer - Operations
Ivan Berkosha - Chief of Technical Department
Tanasiy Semotyuk - Head of Adjustments Workshop
Mykola Korvotsky - Head of Chemical Workshop - GC
Peter Chopik - Senior Forman Automation Workshop - O_2 Analyzers
Dept of Automatic Control Systems
Michail Zelanovsky - Deputy Chief of Adjustment Dept - Enerac, Infrasec
Yaroslav Pyrihh - Computer Specialist
Nina Kryzhanovskaya - Senior Foreman - Electrical Department

INSTRUMENTS SUPPLIED TO BURSHTYN

Zirtek oxygen analyzers, 2 probes for one T-boiler, 1 two-channel analyzer
Panametrics two channel ultrasonic transit time flow meter
Instromet natural gas chromatograph, display control unit and accessories
Oxygen cell and consumables for Enerac

During February - March of 1995, the plant was provided with an Enerac combustion analyzer, a laptop computer and printer, an infrared thermometer and a Fluke power

analyzer

6.2 Results and Benefits

Enerac Combustion Analyzer

They asked why the manual has detailed instructions for plotting and emissions analysis, but the instrument says "no function" The built-in printer is supposed to print curves, but it does not work They can only get plots on computer screen by using Enercomp for Windows They had discussions with Uglegorsk power plant about the Enerac Also, the refresh diskette is a 5 25 in floppy, whereas the TI laptop has a 3 5 in drive Enerac S N 11003249 They used it for a while to measure CO_2 and NO_X in flue gas

They also have a German IMR combustion analyzer (1994) similar to Enerac, which also needs an oxygen sensor, calibration gases and service, but no money to purchase

They report that the Zeigler UNICON CEM system installed on stack No 3 several years ago is still non-functional because they need calibration gases The probe in stack is damaged because of lack of use and no maintenance They said $455,000 was wasted They said the amount of fines for emissions has decreased because the number of units operating has decreased Fees (fines?) paid for emissions in 1996

Emissions	Hrvina	
Soot	212,588	
Sulfur Anhydride	459,107	
NO_X	76,352	
CO	4,538	
V_2O_5	404	
	752,989	$413,732

They also have a flue gas analyzer ANALIT-PRIBOR which was manufactured in Kiev It is reported to be a microprocessor type photo sensitive spectrum analyzer measuring CO_2, CO, SO_2, NO_X, NO, NO_2, and having a long life The instrument is not portable, but compact in size and easily moved It was installed on Unit 9 for awhile near I D fan, but removed because it was getting damaged in the dirty atmosphere

Infrared Thermometer

The infrared thermometer was used up until six months ago to find problems, but batteries died and they cannot find 2 Hrvina ($1 10) to buy four new ones The electrician used it to check a large "fuse" on a transmission tower which was overheating from a short circuit and could have been a serious safety incident They used it to check insulation and covers on boiler burners They also used it to find and repair insulation on steam lines from boilers They did not seem to be aware of other uses for checking temperatures of motors,

20

bearings, contacts, etc The electricians apparently refused to use it

Panametrics Ultrasonic Flow Meter

They recently received the Panametrics two-channel ultrasonic flow meter and training on how to use it The technical specialist has studied the manual and plans to use it for measuring mazut

Fluke Power Harmonics Analyzer

The Fluke power analyzer is being used for measurements only in secondary circuits up to 100V, 0 2, 0 3, 0 5 amp A more suitable application would be in primary circuits It has been useful for preparing current phase diagrams and use in HV switchyard circuits for checking measurements from current and voltage transformers

They know that harmonics from large motors are a serious problem and the Fluke would be a valuable instrument for analyzing, but it is not the responsibility of their department

Instromet Encal Gas Chromatograph

The Instromet gas chromatograph has not yet been installed because of financial problems, and trying to decide where it should be located They said there is no space in the natural gas metering substation control house, and have decided to remodel a secure room near Unit 2 They have a contract with another organization to install about 50m of sample line from the main gas distribution line to boiler room They will raise walls to ceiling to enclose room and provide insulation They were asked where they will vent sample and calibration gases to atmosphere and where KCal output signal would be integrated with meter station flow, pressure and temperature logging on computer They do not yet know The instrument and accessories are still packed in boxes and it is questionable if equipment will be installed and commissioned by the end of August

Zirtek Boiler Oxygen Analyzers

The two Zirtek oxygen probes are installed on Unit 3 boiler angled downward above a burner on each side This is not a good location because of the possibility of flame impingement and high temperature and slag damage Zirtek engineer recommended location higher up in radiant section in fire box Recommended temperature range for zirconium oxide cell long term performance is 600 to about 1200°C

The reason probes were installed on Unit 3 is the fuel split is about 90% coal, 5% gas and 5% mazut and burner design results in unstable flame and inefficient combustion During the commissioning test, oxygen was measured at 11-12% and 870-900°C The boiler is presently shut down for repairs

Some of the experts wanted to install probes the same way at all 16 burners Our impression is that they do not want to relocate the probes higher in the furnace

Coal is supplied from 23 mines We were given data for coal, gas and mazut consumption, heating values and prices for 1995, 1996 and 1997

6.3 Conclusions

There have been significant management changes and financial problems at this power plant which seem to have had a negative effect on employee morale and successful results with USAID energy efficiency and monitoring instrumentation

The new Director, Vasyl' Bendasivk, came from Dobrotvotor APP 900 MW power plant There was a fluidized bed boiler project at that plant which is no longer operating The former Director is now Deputy Director of Foreign Affairs There seems to be a lot of political in-fighting and lack of support for highly skilled and experienced technical specialists wanting to see progressive improvements made

They are in the process of another organizational change in Lvivenergo where 300 new employees from the district will be absorbed into the Burshtin power plant maintenance organization There are former subcontractor maintenance specialists who have only been paid December salary

It is difficult for employees to be motivated when last week they received only 20% of their February salary The power that the plant generates for domestic and export consumption is paid for in bartered goods, not cash

We were sensitive to many impressions that technical specialists working with USAID supplied instruments are very knowledgeable and experienced, and know what needs to be done, but are frustrated because management does not seem to be interested in or recognize the contributions they can make It is not so much a matter of needed money, but recognition of the creativity and innovation of many talented specialists which can go a long way to help solve problems and improve energy efficiency in many small ways in the Burshtyn power plant

COAL CONSUMPTION

	1995 P		1996 P	
	B (T)	Q p	*B (T)	Q p
I	379710	7097	367645	4285
II	298164	4393	256612	4210
III	320951	4509	264699	4354
IV	279651	4210	216863	4333
V	309413	3910	254222	4583
VI	319353	4022	255993	4747
VII	288009	3982	260548	4715
VIII	362394	4092	231768	4743
IX	391070	3672	231428	4717
X	419617	3608	229952	4496
XI	344118	3779	247744	4413
XII	311231	4437	268332	4106
Pic	4023711	4037	3085806	4464

NATURAL GAS

	1996 P		1997 P	
	B (T)	Q p	*B (T)	Q p
I	22069	8030	41599	8043
II	15726	8023	14889	8078
III	7813	8040	13023	8125
IV	1178	8030	20083	8115
V	--	--	34271	8100
VI	--	--	36519	8097
VII	--	--	23345	8123
VIII	14068	8098		
IX	25593	8110		
X	17410	8135		
XI	14222	8123		
XII	33175	8130		
Pic	151254	8092		

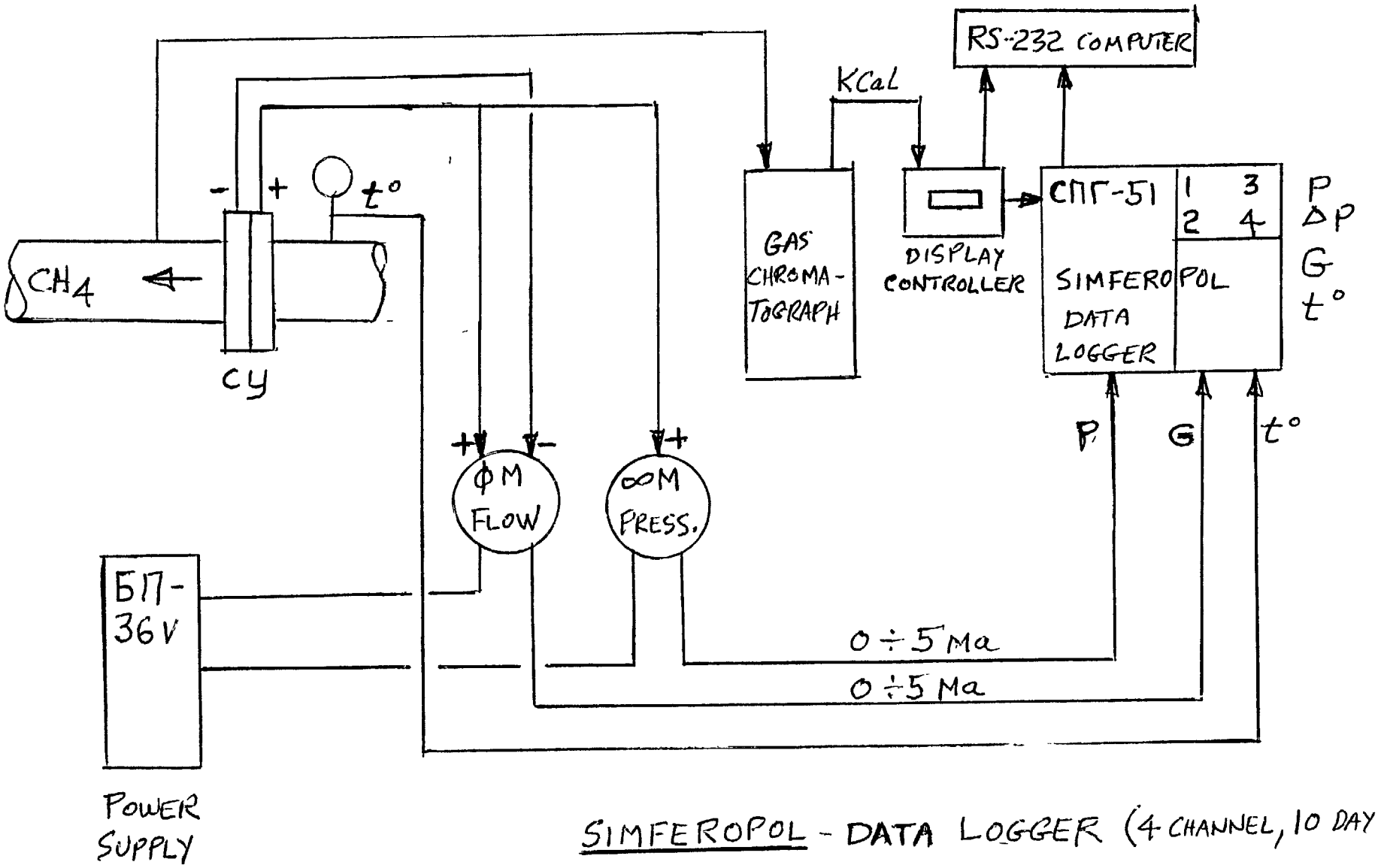

SIMFEROPOL - DATA LOGGER (4 CHANNEL, 10 DAY MEMORY)

ODESSA - PENTIUM COMPUTER

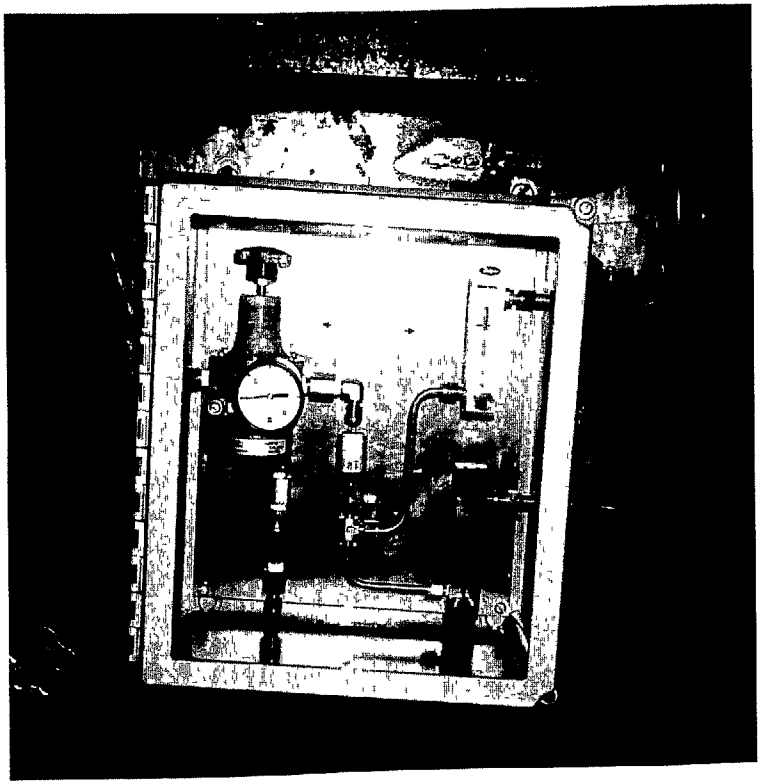

REFERENCE AIR

PROBE ABOVE BURNER

ZIRTEK BOILER OXYGEN ANALYZER

BURSHTYN

Location: Burshtyn Power Plant
Date: July 16, 1997

Re) Trip Status

We arrived at the plant on the evening of 7/14 The plant had arranged reservations at a hotel a few minutes from the plant. We were met at the hotel by Mr. Trishchuk (?). We went to a local cafe to get acquainted and discuss the status of the oxygen analyzer installation. At present the boiler is only operated often enough to control corrosion. We will discuss starting up the boiler tomorrow morning to allow a full operational test of the Zirtek equipment.

Work began with a meeting at the plant at 9:00 AM on the morning of the 15th. Initial meeting was with the Chief of Engineering and his staff. There was considerable discussion about the location for mounting the probes. Two things became evident as the day progressed·

1 There is an error in the translation into Russian. The suggested minimum extension into the fire box got translated as "maximum" in Russian. Both Krivoy Rog and Burshtyn took this information as critical and did not consider the actual probe length as a determining factor in mounting the probe. All the other plants ignored the translation error and made the logical installation based on the equipment delivered.
2 The plant had understood that the probe could (should?) be mounted very close to the burner. This confusion seemed to have come from information gained in the distant past. They installed the probes so that the tip of the probe was within inches of the base of the flame They were quite concerned about the hard scale (slag) that accumulates in this area. I agreed that the slag would be a problem when firing fuels that produced ash. I also told them that it was not a good location to make the oxygen measurement since the sample should be made above (downstream) of the flame

Another item of discussion involved when the boiler could be put into operation. The earliest possible day seemed to be within 2 or 3 days. I think some of the uncertainty involved the amount of repair work that remained to be done and the current possibility of a workers strike. A firm plan was agreed upon in the deputy directors office We would do as much check-out and training as possible without the boiler in operation. I assured them that based on the level of technical expertise experienced at other plants in Ukraine, I was happy to let them do the final startup With this agreement, we were able to proceed with the work at hand.

There was concern about the amount of copper tubing supplied They did not have enough to make a proper installation and do not have a normal source of copper tubing. We worked out a solution based on materials available

At this point the air supply system seemed to be satisfactory. We looked inside the boiler at the actual probe installation. I then fully understood the previous discussion regarding probe location and extension into the boiler The probes were installed angled downward with the tip within in inches of the burner I explained that this was a poor sample point. They wanted to know where the other plants had installed the probes I told them that all the other probes had been installed above (beyond) the fireball and suggested a similar location higher up the wall. They readily agreed that this made sense. The chief engineer agreed to the relocation However, the plant would startup with the current location just to verify proper operation. I hope they only burn gas with the probes at the present location I think they may see some strange oxygen values since the measurement will be behind the flame

The electronic panel is mounted in the instrument racks behind the operators panel. We powered up the electronics and corrected a wiring error which was detected by the OPEN alarm message. The signal cable pairs on analyzer number two had been reversed We changed the analog output from 4 - 20 mA to where 0 - 5 mA represents 0 - 10 percent oxygen

NOTE. The standard analog output signal range in Russia is 0 - 5 mA instead of 4 - 20 mA. They wanted the analyzer scaled so 0 - 5 mA represented 0 - 10 % oxygen. I recalculated the M and B parameters used in the ANOUT function They needed to be set as M = 5 and B = 0 I showed the plant how to use the appendix section on rescaling to calculate the new parameters. This same scaling change may be desired by the other power plants. While scaling was discussed at other plants, only Zmiev had indicated the need for a 0 - 5 mA output signal The analyzers are installed on unit #3. The boilers can be fired on any combination of gas, mazut and coal. The issue of "hard" ash deposits may continue to be a concern even with relocation of the probes. The location higher on

the wall will still be in the main fire box and the temperature is expected to be in excess of 1000 degrees C based on the check out and level of understanding after training, I do not expect any difficulty with the actual hot start up.

There seemed to be a lot of internal wrangling (politics) going on at this plant which made it difficult to move forward with the work However, once the actual work began, things moved well and everyone seemed quite pleased with the work accomplished. Most of the plants had noticed some difficulties with the accuracy of the translation into Russian. This is the only plant that made a real issue of the documentation. One individual complained about the overall schematic because it did not represent the actual "boiler". Apparently most of the workers preferred to speak Ukrainian instead of Russian.

Personnel Contacts.

Mr Bendasiuk	Plant Director (Vasiliy P.)
Mr. Demyam	Chief Engineer (Nikolai M.)
Mr. Matiyevstay	Head of Automation Workshop (Viktor A.)
Mr. Trishchuk	Ass't Head of Automation Workshop (Yuriy M)
Mr. Zolavovskiy	Ass't Head of Adjustment Workshop (Mikhail G.)
Mr Shovozhuk	Ass't Head of Boiler Operation Workshop (Yaroslav V.)
Mr. Kobzev	Deputy Chief Engineer on Reconstruction & Repair (Nikolai M)

Recommended Action

1. The plant is quite concerned about not having access to a spare set of electronics. I think there should be a unit available in the Ukraine if not at each plant
2. Follow up should be made to determine that successful operation has been established
3. One of the spare probes had suffered shipping damage similar to the two probes at Krivoy Rog

May 30, 1997

Delivery Order #06
Task 2 Power Plants Combustion Efficiency

Business Trip Report.
Period: May 26 - 28, 1997
Destination: Burshtyn Thermal Power Plant

Completed by; Alexander Filippov,
Burns and Roe Kiev Resident Engineer

During the period from May 26 through May 28 I visited Burshtyn Thermal Power Plant. The purposes of the trip were:

1) To sign letters of receiving for the equipment supplied by USAID/Burns and Roe
2) To schedule a start-up visit of ZIRTEK and INSTROMET companies technical representatives.
3) To teach the plant staff how to operate the supplied energy equipment.

During the meeting with Mr. Bozenenkov, Deputy director on foreign relations he expressed his satisfaction by the fact of receiving the equipment. But he stressed that the plant was facing serious difficulties related with the major lack of funds The main reason is non-payments for electricity. The plant doesn't get paid, although this is one of the largest power plants in Ukraine and even sells electricity abroad. The plant has big debt on wages for its workers. Since November 1996 the employees have been paid from 30 to 40% of their monthly wages.

On Tuesday, May 27, we had a technical meeting and discussion of different questions related to installation of oxygen analyzer ZIRTEK. Meeting was headed by Mr. Matievsky, Chief of control equipment department, 12 specialists participated. By the time of my visit the plan only had opened the boxes with the equipment and hadn't studied the manuals yet. So the meeting turned to be a "brain storm" over different technical aspects of oxygen analyzer installation. The specialists determined the boiler and the points of installation, responsible persons and general preliminary steps of work. I explained necessity to finish installation by the end of June, 1997, in order for the ZIRTEK representative to complete start-up of the analyzer. Mr. Matievsky and other managers promised to make their best to finish installation in time.

We discussed the issue of gas chromatograph installation This question was very difficult. It looked like the plant had different reasons not to install it at the time being. First, the system of payment for gas has changed since the decision of installation of gas chromatograph (calorimeter) was made. Now the plant pays for the volume of received gas and for its "average, contract" calories During last 1.5 years they have not registered the calories content lower that contracted, only on the contrary. So they were reluctant to install the device which can "make" them to pay additional money for the gas. The second reason of being reluctant

to install the calorimeter now was the lack of finances to pay workers for additional, "non-regular" job.

Later I had another meeting with Mr Demian, Chief engineer, Mr. Stepas, Deputy chief engineer, and Mr. Matievsky. Matievsky expressed the plan for oxygen analyzer installation and his reasons to put on hold installation of gas calorimeter The chief engineer and his deputy had different opinion. They believed that it is very important to have an on-line gas calorimeter After long discussion and arguing, the chief engineer decided to pass the gas calorimeter to the chemical department and promised to install it.

In the end we had more discussions with Mr.Bozenenkov, and the others. The following was decided:

1) the oxygen analyzer will be installed by the end of June. The plant would like to be the last in the line of the plants visited by ZIRTEK representative;
2) the question of installation of calorimeter will be discussed once more at the plant and the final decision will be done within next week.

Together with the technical specialists we went to the warehouse , opened boxes with the equipment and checked the content. I provided the personnel with the new coupons for extra sensors for Enerac 2000 in exchange for the wrong ones they had received together with the equipment.

Back in the office I instructed the operators on basic operations with the sonic flowmeter.

APPENDIX A-1

Energy Conservation Opportunities (ECO's)

ECO-04, ECO-06, AND ECO-08 CALCULATIONS

IN-SITU OXYGEN ANALYZERS, MAZUT FLOW METERS AND COAL FLOW METERS

1 0 INTRODUCTION

The boilers air to fuel ratio is controlled manually The existing extractive paramagnetic type oxygen analyzers are maintained and calibrated However, the instruments are prone to being fouled by moisture and acid sludge from the flue gas. Also, there is a significant time lag between sample point and readout, which is aggravated by swings in excess oxygen due to fluctuations of coal feed to burners The biggest problem with the existing extractive analyzers is that the sample is taken after major air in-leakages has already occurred Installation of in-situ zirconium oxide cells upstream of major in-leakages would improve reliability, response, and accuracy of readings

2 0 ASSESSMENT OF POTENTIAL EXCESS OXYGEN REDUCTION

There is the potential to reduce the levels of excess oxygen at the Burshtyn units This potential is based on the current levels of excess oxygen that are maintained at the burners In order to assess this potential, it is necessary to evaluate the measured excess oxygen levels and account for air in-leakage through the various sections of the boiler Normal burner design calls for an excess oxygen level at the burners of 3 5% For burners of this design and vintage, it would be more appropriate to assume that the excess oxygen level would be closer to 4 0% These are the minimum levels required for stable flame and proper combustion. Excess oxygen levels higher than this provide the opportunity for a reduction in the operating levels.

2.1 Evaluation of Excess Oxygen at the Burners

At full load firing coal, the excess oxygen was measured in the convection pass and ahead of the air heaters The excess oxygen measured was a maximum of 6 1% BRC calculation indicates that the corresponding excess oxygen at the burner is about 5.0%

Accounting for the existing burner design, the minimum excess oxygen at the burners would be assumed to be approximately 4 0% Thus, the potential reduction in excess oxygen at the burners would be 5 0 - 4 0 = 1 0%

2.2 Effect of Excess Oxygen on Boiler Efficiency

Boiler efficiency is calculated based on the ASME Boiler Test Code, PTC-4 1 The losses in boiler efficiency affected by the excess oxygen levels are the dry flue gas loss and the moisture in air loss The dry flue gas loss is the loss of heat determined by the flue gas flow and the difference in temperature of the flue gas and the ambient air. The moisture in air loss is the same loss calculated for the moisture that is contained in the air

The reference excess oxygen was selected to be 4 0%, which is typical for coal fired burners of this design and vintage Boiler efficiency was calculated for excess oxygen levels up to 6%, to account for possible operating conditions above the optimum

A curve of the efficiency loss due to high excess oxygen is shown below

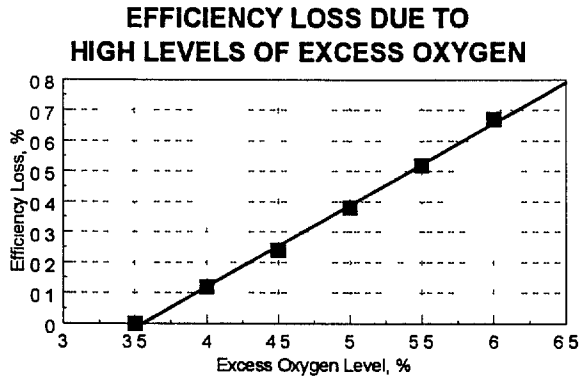

2.3 Boiler Efficiency Improvement With Reduced Excess Oxygen Operation

Based on the data collected during the visit to the plant it appears that it is possible to operate the boilers at reduced excess oxygen levels It has been shown that the potential excess oxygen reduction possible at the burners is approximately 1 0% This would reduce the excess oxygen from 5 0% to 4% Using the curve shown above, the boiler efficiency improvement would be 0.24%

3 0 COST ANALYSIS

Fuel savings can be realized by replacing existing extractive oxygen analyzers with zirconium oxide sensor probes placed directly into the flue gas path to be able to better control excess air for combustion In addition, mazut flow meters and coal flow meters are required to realize benefit from lower excess air

Equipment Cost

ECO-04·	Oxygen analyzers, 1 unit, 2 probes	$29,000
ECO-06	Mazut sonic flow meters, 4 required	$16,000
ECO-08:	Coal flow meters	$40,000
	Installation and commissioning	$15,000
		$100,000

Based on test results, it is estimated that a modest 0 24% increase in boiler efficiency can be achieved from better control and reduction of excess air required for combustion, which will result in a 0.24% decrease in fuel costs,

Plant generating capacity = 12 units x 200 MW (165 MW derated) = 1980 MW
1994 power generation = 7,626,080,000 KWH/8760 hrs = 871 MW
≈ 5 279 units at full (871 MW/165 MW) load

33

Simple Payback for O_2 Analyzers - 1994 Prices

Fuel cost per unit per year = $97,556,440 total/5.279 = $18,480,099
Savings per year due to boiler efficiency improvement = 0 0024 x $18,480,099 = $44,352
Payback = $29,000/$44,352 = 0 65 year = 7 8 months

Simple Payback for O_2 Analyzers - World Prices

Fuel cost per unit per year = $191,618,320 total/ 5 279 units = $30,615,329
Savings per year due to boiler efficiency improvement = 0 0024 x $30,615,329 = $73,477
Payback = $29,000/$73,477 = 0 39 year = 4 8 months

Simple Payback for O_2 Analyzers and Sonic Flow Meters - 1994 Prices

($29,000 + $16,000)/$44,352 = 1 year = 12 months

Simple Payback for O_2 Analyzers and Sonic Flow Meters - World Prices

($29,000 + $16,000)/$73,477 = 0 61 year = 7 3 months

Simple Payback for Entire Package - 1994 Prices

$100,000/$44,352 = 2.25 years = 27 months

Simple Payback for Entire Package - World Prices

$100,000/$73,477 = 1 36 years = 16.3 months

ECO-07 - Calculation

Online Gas Calorimeter

Reported heating value specification for Russian natural gas is 8116 Kcal/Kg. However, the technical specialists complain that the delivered heating value runs low by as much as 130 Kcal/Kg (Avg. 42.1 Kcal/Kg) when the plant is paying for gas on a volumetric basis. They want to be able to measure the gas deliveries on the basis of heat content. An online gas calorimeter measuring and recording Kcal/Kg and Sp. Gr. costs about $35,000

Delivered Natural Gas

628,000,000 Nm^3/Yr x 0.7207 Kg/Nm^3 = 452,590,600 Kg/Yr

452,599,600 Kg/Yr x 42.1 Kcal/Kg = 1.905 x 10^{10} Kcal/Yr

1.905 x 10^{10} Kcal/Yr x 3.9685 BTU/Kcal = 7 599 x 1010 BTU/Yr

Simple Payback - Domestic Price

7.599 x 1010 BTU/Yr x $0.715/$10^6$ BTU = $51,407/Yr

$35,000/$51,407 = 0.68 Yr = 8.2 months

Simple Payback - World Price

7,599 x 10^{11} BTU/Yr x $2.10/$10^6$ BTU = $158,739 Yr

$35,000/$158,739 = 0.22 Yr = 2.6 months

APPENDIX A-2

Vendor Information

AACC/Zircoa™

HIGH TEMPERATURE OXYGEN SENSORS

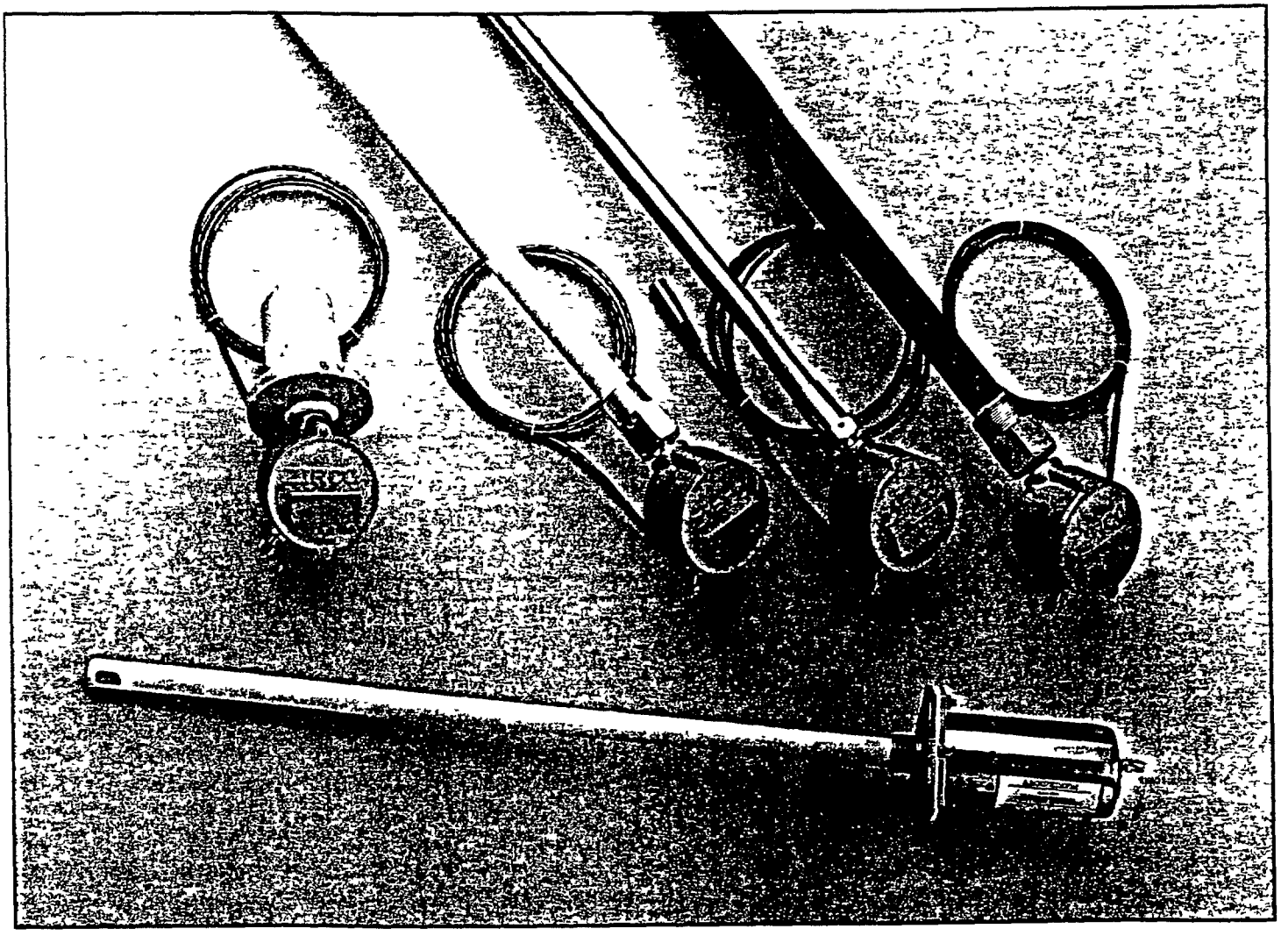

Model 8212

This sensor is designed to fulfill the special requirements of the Glass Industry Model 8212 provides reliable O_2 measurement in positive pressure tanks, even in conditions of significant "Batch Carryover"

Model 8081

The versatility of this "workhorse" sensor is proven by its industry-wide applications around the world. You can expect Model 8081 to provide dependable O_2 measurement in numerous coal, gas, oil and waste-fired environments

Model OX

Model OX provides the critical measurements you need in a state-of-the-art rebuildable design. Available option permits use of a portable extractive device to verify oxygen readings

Design and operating advantages common to all ACC/ZIRCOA Oxygen Sensors.

- Solid-state design.
- Integral thermocouple (B R S)
- Place directly into combustion chamber
- Operating temperature range 1200 - 2900° F (650 - 1600° C)
- Terminal head rating 300° F (150° C) maximum.
- Responds instantly to changes in furnace atmosphere
- No sample lines to plug or leak.
- No heaters to calibrate or fail.
- Little or no maintenance required.
- Optional quick-disconnect sensor lead wire
- Installation mounting assemblies available
- Accuracy of ± 5% of the observed process variable i.e pv=2.0%±0.1%

Model 8212

- 6" (152mm) sensor with ceramic mounting plug
- Mount in melter crown backwalls recuperator stacks regenerator crown/target walls
- Designed to withstand attack from high vapor pressure metals

Model 8081

- Patented boot protects electrode
- Alloy alumina and silicon carbide protection tubes available
- Lengths available from 18 to 42" (457 to 1067mm)

Model OX

- Optional verification port.
- Lengths available from 20 to 36" (508 to 914mm)
- Rebuildable
- Alloy and alumina protection tubes available

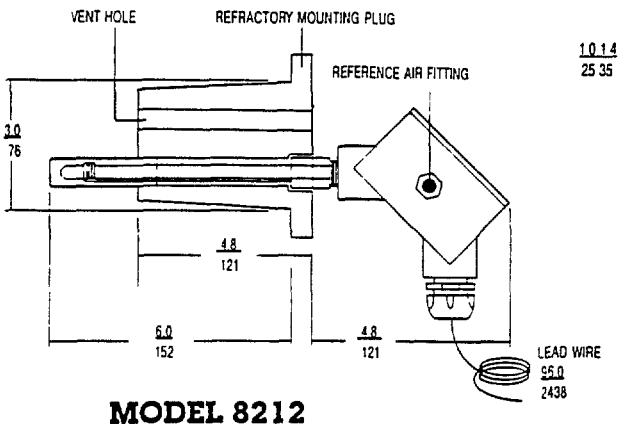

MODEL 8212

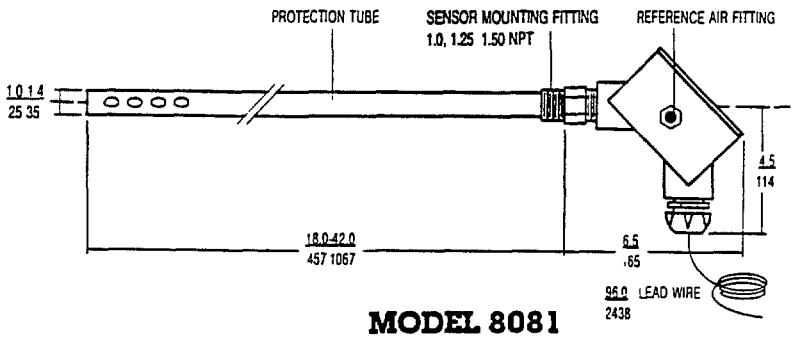

MODEL 8081

ALL DIMENSIONS
INCHES
MM

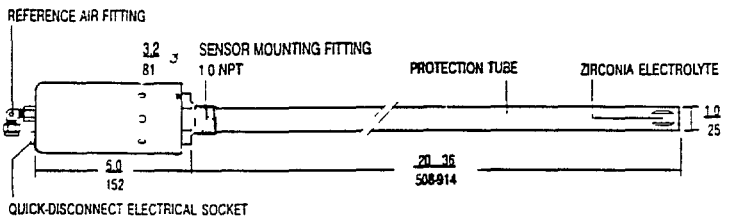

MODEL OX

For specific application information, please call:

Caution. Oxygen sensors should be used only for oxygen *trim* not direct air control. Sensors should be connected to appropriate trim or process control instruments which only allow the *fine-tuning* of the air/fuel mixture. Use of oxygen sensors for total independent control of combustion may result in combustion air shut-down which could lead to explosion and environmental (emissions) hazards.

AACC/Zircoa
DIVISION OF ZIRCOA INC
31711 SOLON ROAD
SOLON OHIO 44139
TEL (216) 349-7220
FAX (216) 248-8864

A Member of the DIDIER Didier Group

Reprinted from May 1991 issue of POWER.

Copyright 1991, McGraw-Hill, Inc. All rights reserved.

Utilities

High-temp O_2 measurement improves boiler performance

Looking for ways to improve plant heat rates Northern Indiana Public Service Co (Nipsco) has installed high-temperature O_2 sensors in the furnace and convection passes of several of its boilers, beginning with Units 7 and 8 at its Bailly generating station with good results

The problem. Units 7 and 8 are Babcock & Wilcox Co (Barberton, Ohio) coal-fired steam generators with Cyclone burners Unit 7 is a 175-MW drum boiler Unit 8 a 340-MW once-through boiler As with most utility units, excess-air control was achieved by determining O_2 levels at the economizer outlet Since both units are normally run under negative furnace draft, air can infiltrate through leaks in the boilers, ductwork, or expansion joints This air in-leakage can result in a bias in the excess-O_2 control circuit, giving indication of sufficient O_2 when, in fact, the opposite condition may be true

Enough air infiltration can lead to improper air-to-fuel ratios, poor combustion, and corrosive damage if a reducing atmosphere prevails Also, the O_2 probes and analyzers on Units 7 and 8 became increasingly unreliable Repairs to maintain the economizer-outlet system had become excessive and costly The result? The O_2 control system often operated with one or more probes out of service, making it more difficult for the operators to monitor and maintain excess-O_2 levels which led to a lack of confidence in the system

To solve the problem of biased excess-air readings, Nipsco started experimenting with permanently installed high-temperature O_2 probes in the upper furnace of Unit 7 These criteria were established as a basis for the purchase of a new system

- Low maintenance requirements
- Continuous operation in the furnace section of the boiler.
- Improved probe life, with a one-year minimum desired.

A system that appeared to meet the criteria was a zirconium oxide cell mounted in a silicon carbide tube This type of probe had seen service in the glass and steel industries, but not in US utilities The probe is said to offer several advantages

- High-temperature operation, from 1200F to 2900F
- Fast response.
- No sensor calibration required.
- No heater calibration or failure.

Probe operation. The high-temperature capability of the new O_2 probes allows their permanent installation in an area of the furnace other than the economizer outlet. The high-temperature cell is exposed to a reference gas (instrument air) on one side of the cell, process gas on the other (Fig 1) Zirconia oxide cells behave as solid-state electrolyte at high temperatures in the presence of a catalyst Under isothermal conditions, and when O_2 partial pressures differ on either side of the cell, an emf inversely proportional to O_2 content in the process gas is developed.

Proper functioning of the zirconia oxide cell is achieved above a minimum recommended temperature of 1100F Because the old probes (also zirconium oxide cells) had to operate at temperatures of 850F or less at the economizer outlet, a heater assembly and temperature controller were required to maintain cell temperatures greater than 1100F Since heaters aren t required with the new high-temperature probes, calibration requirements are eliminated

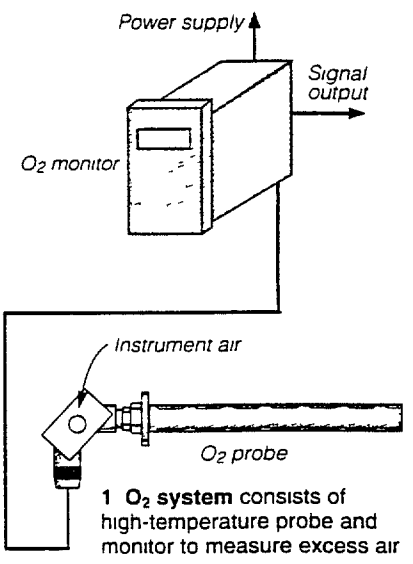

1 O_2 system consists of high-temperature probe and monitor to measure excess air

Probe testing. At Unit 7, two high-temperature O_2 probes were initially installed in the inspection ports on the front wall of the furnace (Fig 2), with a monitor for each installed at an elevation 88 ft below the probes in the burner-control cabinet room Although performance was satisfactory at first, two months later one of the probes failed, breaking off at a point beyond the inside of the front-wall tubes It was decided that excessive amounts of slag collecting on the probe had caused the failure, rather than stress caused by constant vibration experienced at this location

The next step was to install a probe with a stainless steel protection tube (Fig 3), instead of the standard silicon carbide tube, to see if it could better withstand the extreme conditions in the furnace. After only three days of operation, this probe failed—an excessive amount of slag had accumulated on its tip. The other probe failed after four months of continuous operation. The cause again appeared to be from slag

Since probe performance otherwise was satisfactory, an outer protection tube was added to increase longevity The longest achievable run with this added protection was only a probe life of three months The outer tube also had an adverse effect on the accuracy of the reading if extreme care was not taken in its installation

Improved location. Obviously, the location of the probes had to be changed. At the front wall of the furnace, operation was completely unpredictable and uncontrollable, rendering the probes unsuitable for use in an automatic control system A location in Unit 7 that could

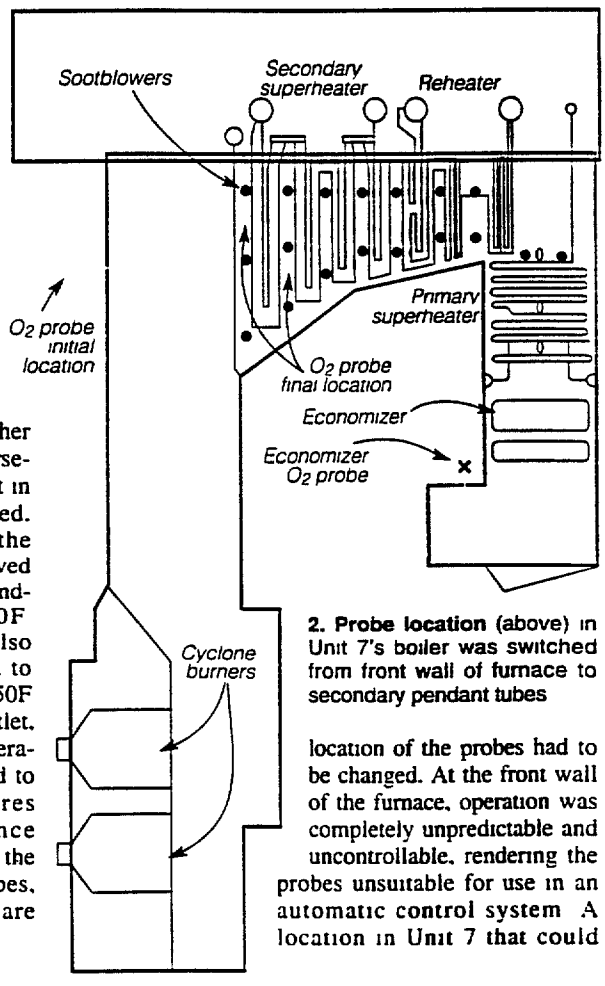

2. Probe location (above) in Unit 7's boiler was switched from front wall of furnace to secondary pendant tubes

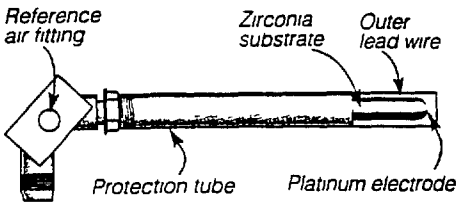

3. Protection tube (right) of stainless steel is aimed at improving probe's ability to withstand extreme furnace conditions

greatly improve the service life of the high-temperature O_2 probes appeared to be in the superheater area of the boiler convection pass Rather than being exposed to harsh environmental conditions in the open area of the furnace the probes would have maximum protection within the secondary pendant tubes (Fig 2).

Consequently, four O_2 probes were installed in the secondary superheater section of the furnace—two in each sidewall. A potential risk in putting them there was they would be close to the sootblowers. After the probes were in service, the sootblower nearest each probe was operated. It was found that sootblower operation would not damage the probes The O_2 system could now be monitored to evaluate the performance and longevity of the probes.

The bottom line. Initial trials on Unit 7's high-temperature O_2 system show that the probes have good potential for application to utility boilers The knowledge gained from these trials was put to good advantage when a high-temperature O_2 system for Unit 8 was installed, including four probes in the pendant reheat area of the convection pass. After continuous operation for over a year, none of Unit 8's probes have failed.

Results to date have shown differences of O_2 measurement taken at the economizer of 0 4% to 2.5% when compared to the high-temperature probe readings Probe performance has been so successful that the economizer O_2 system will be phased out at Nipsco Also, operator confidence in O_2 measurement of flue gas has been restored **Tom Elliott**

HI-TEMP CARBON AND OXYGEN SENSORS, ELECTRONICS AND ACCESSORIES.

- Simple, Cost Effective Technology
- Integral Thermocouples
- 1600°C (2900°F)
- Industry-Specific Models Available
- Matched Accessories

AACC/Zircoa™

31711 Solon Rd., Solon OH 44139 Tel:(216)349-7220
FAX:(216)248-8864

WORLD CLASS 3000

OXYGEN ANALYZER WITH CONTROL ROOM ELECTRONICS

FEATURES

- *Totally Field Repairable Probe*
- *Patented Electronic Cell Protection*
- *Rugged 316 SS for all Wetted Parts*
- *Flexible Electronics Configuration*
- *Control Room Electronics Module can be Integrated with up to 8 World Class 3000 Probes (16 with Master/Slave) Averages up to 8/16 World Class 3000 Probes*
- *Easy Calibration*
- *No Potentiometers to Adjust*
- *Quick Change Diffusion Element*
- *Field-Repairable Cell Design*
- *Field-Repairable Heater/ Thermocouple*
- *Flame Arrestor (Optional)*

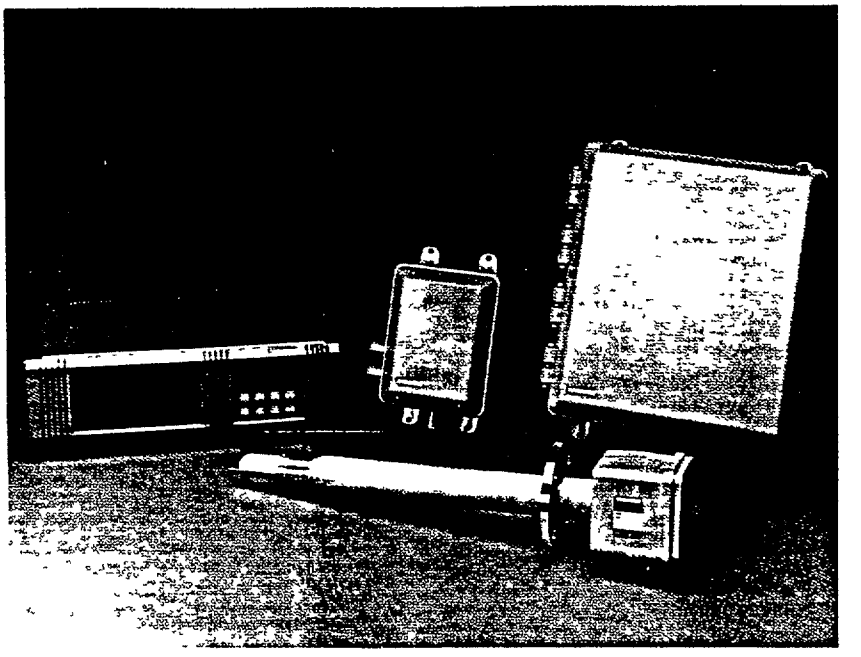

WORLD CLASS TECHNOLOGY FROM THE WORLD LEADER

Rosemount is the leader in oxygen flue gas analyzer technology Rosemount incorporated the Hagan analyzer and combustion expertise The Hagan in situ, zirconium oxide oxygen analyzer has long been established as the industry-standard. Rosemount has combined this Hagan expertise with state-of-the-art features into one package — the World Class 3000 Oxygen Analyzer The World Class 3000 is established as the standard-of-the-industry

The World Class 3000 is totally field repairable as internal components are conveniently accessible for using in-house service personnel For example, the heater/thermocouple probe assembly can be replaced and put back into service by in-house personnel in one-half hour or less This repair is made without requiring the probe tube to be removed from the process

The Hagan zirconium oxide sensor cell incorporates a patented electronic cell-protection feature that automatically protects the sensor electrodes from reducing atmospheres often found in many combustion processes

For those applications where more than one oxygen analyzer will be installed on-site, the World Class 3000 Oxygen Analyzer together with the microprocessor-based CRE 3000 Control Room Electronics module is a cost-effective solution

The CRE 3000 Control Room Electronics module allows interfacing with up to eight World Class 3000 probes (16 with master/slave) via the HPS 3000 Field Interface Module This flexible, easily expanded, electronics arrangement allows the World Class 3000 probes to be linked to the Control Room Electronics module without the added cost of requiring intelligent field electronics (IFT 3000)

The CRE 3000 improves the accuracy of the combustion control process as it averages the oxygen results thereby reducing errors due to stratification Up to 4 averages of any probe combinations can be user-defined.

The HPS 3000 Field Interface Module provides local power to the oxygen probe. It is connected to the CRE 3000 at a distance of up to 1200 feet with low cost signal cable The HPS 3000 module is housed in a standard NEMA 4X (IP65) enclosure for full weather and corrosion-proof protection It is also available in an optional explosion-proof Class 1, Division 1 enclosure to allow low-cost adaptability of the World Class 3000 electronics to hazardous gas areas.

Users with multiprobe applications may also choose an optional MPS 3000 Multiprobe Test Gas Sequencer The MPS 3000 provides automatic test gas sequencing for up to four (4) World Class 3000 probes to accommodate fully automatic micro-processor-based calibration of the analyzer packages

Supersedes Product Data 106-300NC,
Pages 1-8, dated March, 1992

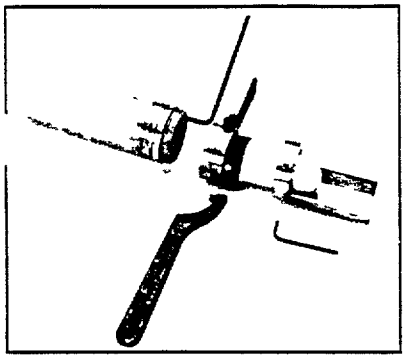

Filter Head Assembly

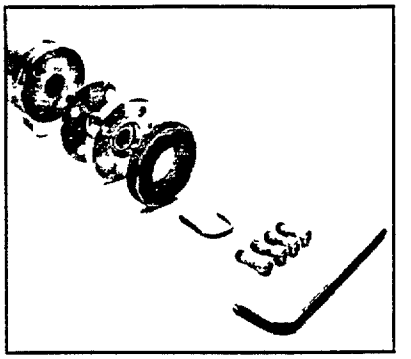

Sensor Cell Assembly

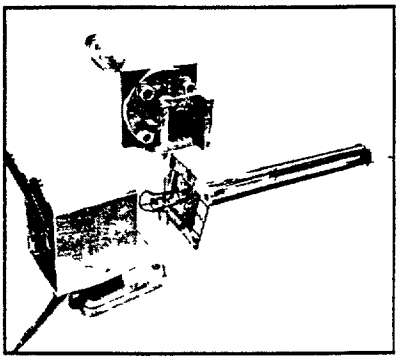

Heater Thermocouple Assembly

OXYGEN SENSOR

Features	Benefits
Rapid, accurate and reliable measurement of excess oxygen with a single, in situ probe	Significant fuel savings normally pay for analyzer in less than one year Significant enhancement in safety
Electrodes are self protected by patented electronic diffusion limited current mode of operation	Provides long life for sensing element even in the presence of sulphur and reducing atmospheres
No sample system, no sample probes, no scrubbers and no pumps are necessary, test gas calibration check without disturbing probe	Low installation and low maintenance costs
High speed of response	Ideal for closed loop control
Solid zirconium oxide electrolyte	Provides high reliability
Field-replaceable cell	Ease of maintenance
Suitable for use in temperatures up to 1300°F (700°C)	May be used with any fuel Absolutely no condensation
Material of construction 316 LSS (all wetted parts)	High resistance to corrosion
Sensitivity of cell increases logarithmically when oxygen decreases	Very useful for low oxygen levels Ideal for low excess air burners

ADDITIONAL FEATURES

- Output voltage and sensitivity increase as the oxygen concentration decreases
- Use with any fuel including coal or residual fuel burners
  Diffusion element keeps cell clean while the V-deflector protects the diffusion element
- Unique, patented electronic cell protection feature automatically protects sensor cell when analyzer detects reducing atmospheres
- Output suitable for use with receivers such as indicators, recorders, controllers, data loggers or computers
- Optional flame arrestor
- Optional abrasive shield for extremely harsh environments, including high velocity particulates in flue stream, installation within 10 ft (3m) of soot blowers or heavy salt cake buildup Specific applications pulverized coal, recovery boilers and lime kilns

DIGITAL ELECTRONICS FEATURES

- Control Room Electronics module (CRE 3000) can interface with up to eight (8) World Class 3000 probes (16 with master/slave) Provides all necessary intelligence for controlling the probe and optional MPS 3000 Multiprobe Gas Sequencer
- CRE 3000 Electronics provides user friendly, menu-driven operator interface with context-sensitive, on-line help
- CRE 3000 Electronics averages the process data as defined by user This reduces inaccuracies due to stratification
  Remote contact initiates calibration
  HPS 3000 Field Interface Module allows interfacing of World Class 3000 probe and CRE 3000 without requiring intelligent field electronics or expensive cabling
- Optional explosion-proof HPS 3000 enclosure allows low-cost adaptability to World Class 3000 electronics in hazardous areas
- Optional MPS 3000 Multiprobe Test Gas Sequencer provides fully automatic test gas calibration and reference air for up to four (4) World Class 3000 probes MPS 3000 can be located up to 300 ft (91m) from World Class 3000 probe
- Optional stack temperature and combustion efficiency measurement Stack thermocouple required
- Probe heater over temperature protection with software disable as standard Hardware disable (line voltage relay) requires one additional twisted pair HPS/CRE cable

WORLD CLASS FAMILY OF ELECTRONICS

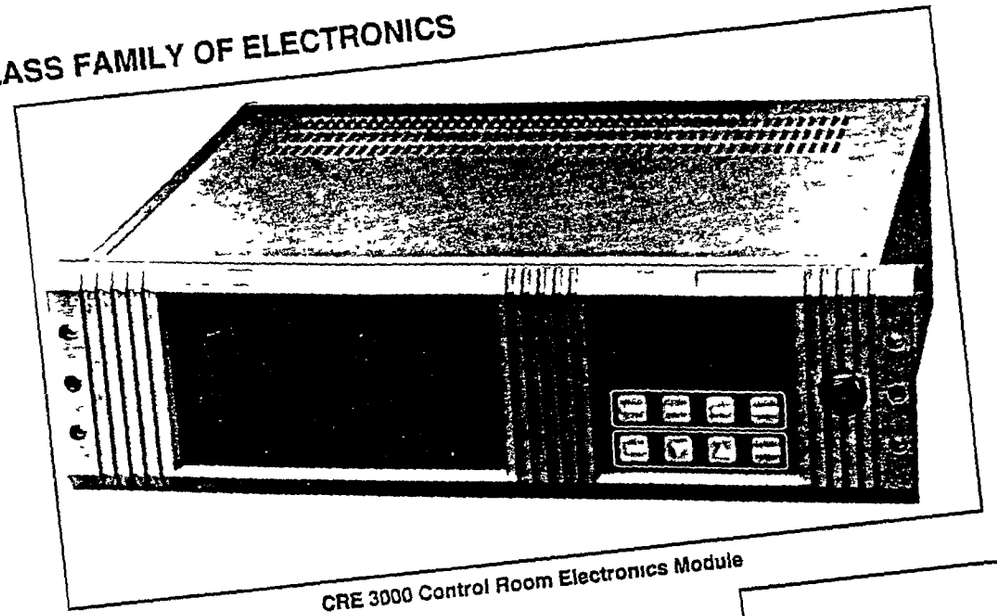

CRE 3000 Control Room Electronics Module

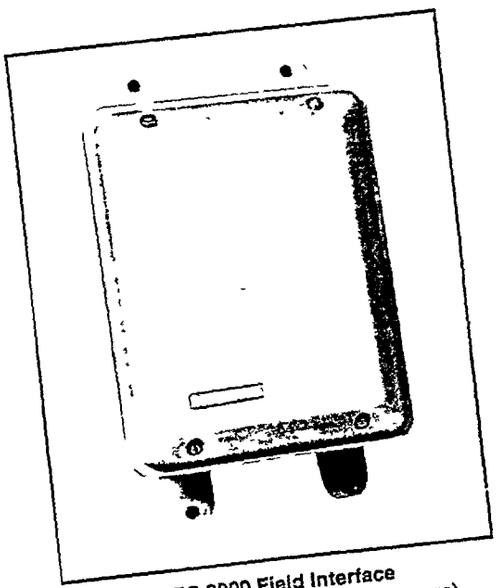

HPS 3000 Field Interface
(NEMA 4X Non-hazardous Enclosure)

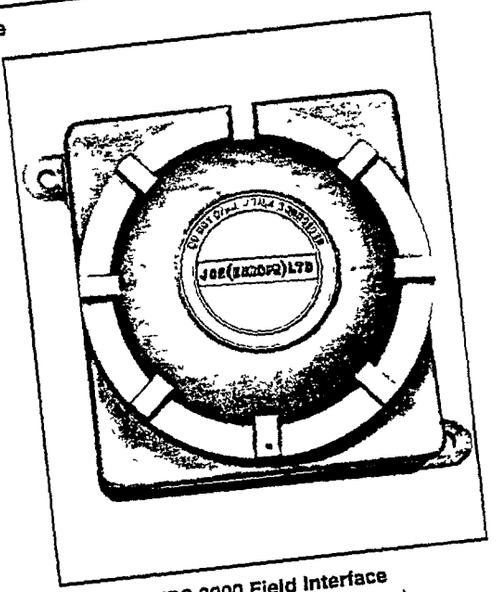

HPS 3000 Field Interface
(Explosion-Proof Enclosure)

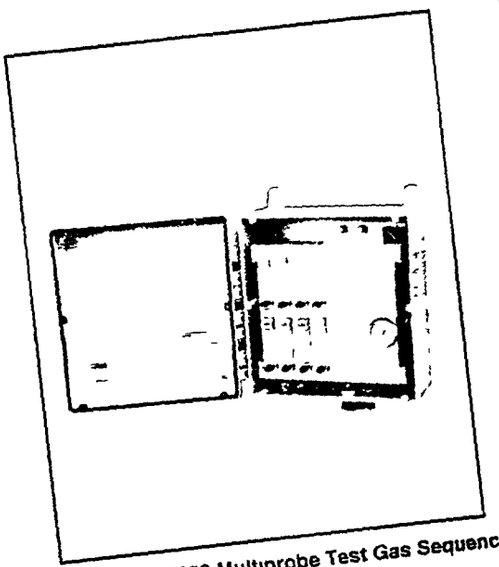

Optional MPS 3000 Multiprobe Test Gas Sequencer

SPECIFICATIONS①

OXYGEN SENSING EQUIPMENT

'robe lengths, nominal. 18 inches, 3 feet, 6 feet, 9 feet, 12 feet depending upon duct dimension
Probe material of construction: 316 LSS (all wetted parts)
Temperature limits for probe in process measurement area· 50 to 1300°F (10 to 700°C)
Cell speed of response 1 millisecond
Probe reference air flow (optional) 2 SCFH clean, dry instrument quality air (20 95% O_2) Reference air set supplied as standard

Calibration gas mixtures: Rosemount Test Gas Kit Part No 6296A27G01 contains 0 4% O_2N_2 Nominal and 8% O_2N_2 Nominal Other suitable gas mixtures can be user supplied
Calibration gas flow: 5 SCFH
Approximate shipping weights:
18 inch (457 mm) package: 55 pounds (24 97 kg)
3 foot (0 91 m) package: 60 pounds (27 24 kg)
6 foot (1 83 m) package: 66 pounds (29 94 kg)
9 foot (2.74 m) package: 72 pounds (32 66 kg)
12 foot (3.66 m) package: 78 pounds (35 38 kg)

CRE 3000 CONTROL ROOM ELECTRONICS

Ambient environment requirements Clean, Dry
Ambient temperature range. 40 to 120°F (4 to 50°C)
Vibration: Slight: 30 degree drop test
Number of probes 8 maximum, expandable to 16 with slave CRE 3000
Communications. 1 RS 232 for communication with slave CRE 3000 (max 50 feet (15m)
Analog outputs 2-12 isolated outputs 0-20 mADC, 4-20 mADC into 950 ohm max, 0-10 VDC into 2K ohm min
O_2 indication (analog output) ±0 1% O_2 or ±3% of reading, whichever is greater
Power supply· 110/115/220V ±10% Vac at 50/60 Hz
Power requirements 100 VA

System speed or response (amplifier output)· less than 3 seconds
Resolution sensitivity — Transmitted Signal 0 01% O_2
O_2 range: Field Selectable (0-1%, 0-5%, 0-10%, 0-25%, 0-100%)
Programmable contact outputs: 8 available, Form-C, 48 V max, 100 mA max
Indicators: LED indicators for system failure (failure description available on LED panel) Calibration in progress for each of 8 probes, O_2 Hi/Lo Alarm for each of 8 probes Probe failure for each of 8 probes
Programmable displays 2 line, 0 8 inch high, 8 digit, alphanumeric LED displays for individual or averaged results
Operator interface: 4 line by 20 character backlight LCD alphanumeric display, 8 key general purpose keyboard.
Approximate shipping weight: 35 pounds (15 88 kg)
Averaging· 4 user-definable averages of 2 to 8 probes

HPS 3000 FIELD INTERFACE

Electrical classification. NEMA 4X (IP65) Optional - Class 1, Division 1, Group B
Humidity range: 95% Relative Humidity
Ambient temperature range: -20 to 140°F (-30 to 60°C)
Vibration: 5 m/sec², 10 to 500 xyz plane
External electrical noise. Minimum Interference
Cabling distance between HPS 3000 and probe. Maximum 150 feet (45 m)
Cabling Distance between HPS 3000 and CRE 3000. Maximum 1200 feet (364 m)
Approximate shipping weight 12 pounds (5 44 kg)
Power supply 100/115/220V ±10% Vac at 50/60 Hz
Power requirements· 200 VA

MPS 3000 MULTIPROBE TEST GAS SEQUENCER (OPTIONAL)

Electrical classification: NEMA 4X (IP65)
Humidity range: 95% Relative Humidity
Ambient temperature range: -20 to 140°F (-30 to 71°C)
Vibration· 5 m/sec², 10 to 500 xyz plane
External electrical noise: Minimum Interference
Piping distance between MPS 3000 and probe: Maximum 300 feet (91 m)
Cabling distance between MPS 3000 and CRE 3000: Maximum 1000 feet (303 m)
Approximate shipping weight: 35 pounds (15 88 kg)
Power supply: 100/115/220V ±10% Vac at 50/60 Hz
Power requirements: 15 VA
Piping requirements: 1/4" o.d. tubing, 1/4" NPT bulkhead connectors (high gas in, low gas in, ref air in, 4 x test gas out, 4 x ref air out)

① All static performance characteristics are with operating variables constant
Specifications subject to change without notice

WORLD CLASS 3000 MULTIPROBE APPLICATION WITH CONTROL ROOM ELECTRONICS

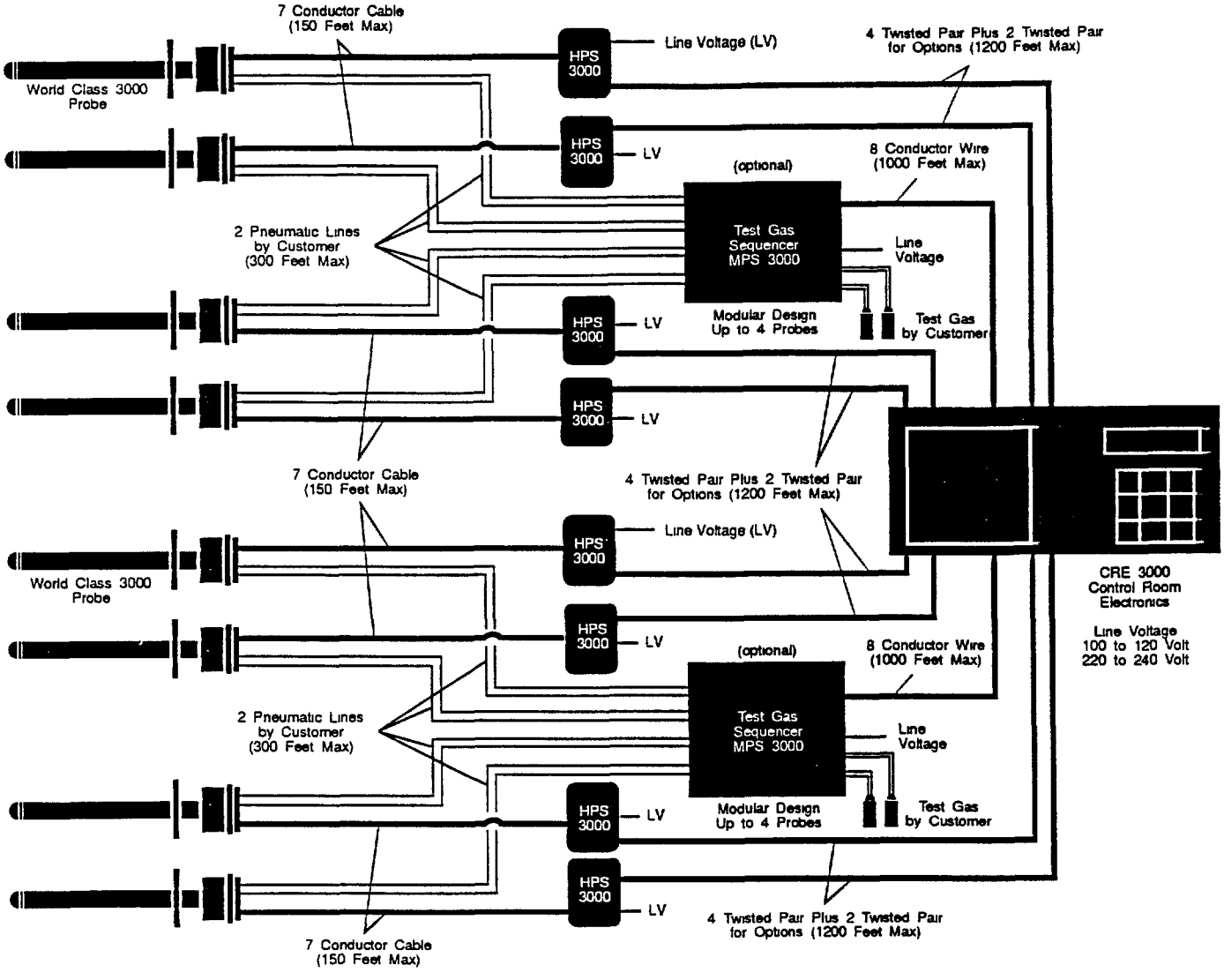

Recycled Paper

Printed in the USA
Rosemount Analytical Inc 1993

Rosemount Analytical Inc

ROSEMOUNT® Measurement Control Analytical

The 1261 Calorimeter

A self-contained oxygen bomb calorimeter with automatic microprocessor control for rapid and precise calorific tests with minimal operator attention.

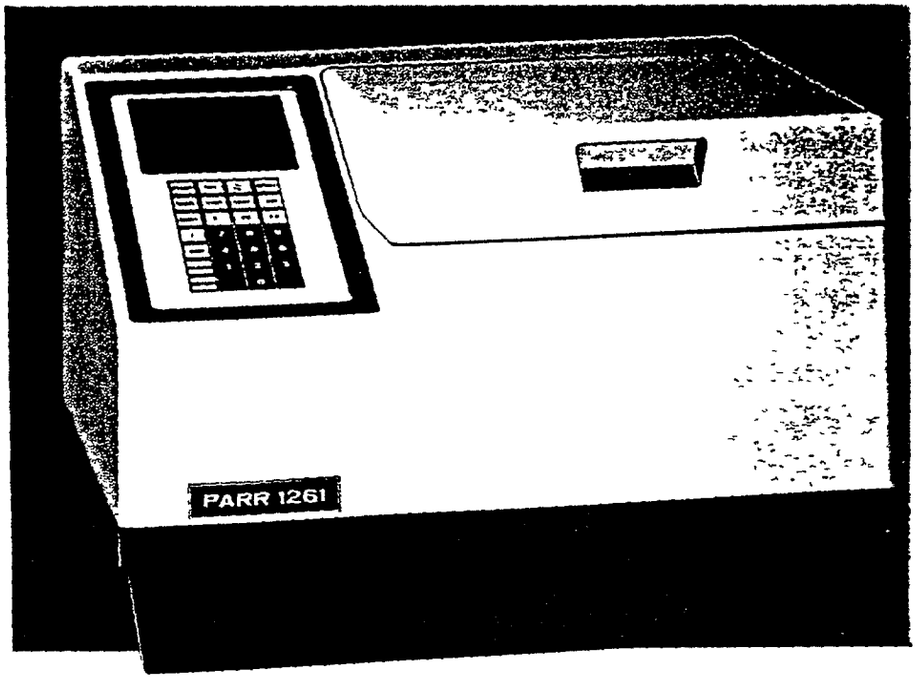

RECOMMENDED FOR

Coal mine, coal preparation plant, commercial inspection, coal burning utility and other industrial laboratories where calorific tests of solid, liquid or refuse-derived fuels are run daily on a routine basis, and where rapid tests with good repeatability are required. Although principal uses for the 1261 Calorimeter are found in coal laboratories, it has equally important applications for determining the calorific value of other solid and liquid fuels. Firms involved in waste disposal management find the 1261 Calorimeter a reliable means for monitoring the energy content of refuse fuels. Equally important applications are found in food laboratories for determining calorific values for foodstuffs and animal feed mixtures, in university laboratories for teaching purposes and for high precision energy research projects.

A COMPLETE, SELF-CONTAINED OPERATING UNIT

All sensors, controls and jacketing in the new Parr 1261 Isoperibol Calorimeter are built into a single, compact cabinet to provide a self-contained operating unit consisting of:

- A temperature-controlled, insulating water jacket with a built-in circulating system and an electric heater
- An oval calorimeter chamber and bucket.
- An 1108 oxygen combustion bomb
- A built-in automatic system for charging the bomb with oxygen
- A high precision electronic thermometer.
- A sealed, touch-panel keyboard for data entry and operation control.
- A bright, LED display for operator prompting, status indication, data verification and report review

FULLY INTEGRATED MICROPROCESSOR CONTROL

All steps in the test procedure are managed by a microprocessor control system using third generation hardware and software pre-programmed to.

- Operate the calorimeter in either the conventional isoperibol/equilibrium mode or in a faster isoperibol/dynamic mode.
- Monitor and control the jacket temperature.
- Ascertain equilibrium, fire the bomb, confirm that ignition has occurred and monitor the temperature rise.
- Terminate the test within operating parameters selected by the user and check for errors.

A BUILT-IN MICROCOMPUTER

All data involved in a calorific test is handled automatically by a dedicated microcomputer which will:

- Accept and store all sample weights and temperature data.
- Apply all necessary corrections for acid, sulfur and fuse.
- Compensate for any added combustion aid or "spiking".
- Compute and report the heat of combustion in units selected by the user.
- Transmit test results to an alpha numeric printer (not included with the calorimeter)
- Accept sample weights directly from an analytical balance using an appropriate interface.
- Communicate with and transmit calorific data to a central computer and/or other instrumentation in a Smart Link network.

Isoperibol Calorimetry

A classical method—improved with automatic control.

Provides rapid tests in the 1261 Calorimeter with excellent repeatability, using either the CLASSICAL EQUILIBRIUM METHOD or a RAPID DYNAMIC METHOD which cuts the time for an individual test almost in half.

THE ISOPERIBOL/EQUILIBRIUM METHOD

The excellent jacket temperature control provided in the 1261 Calorimeter is ideal for test runs using the classical isoperibol method. In this procedure the jacket temperature is held constant throughout the test while the controller continuously monitors the temperatures in the jacket and in the bucket and performs the integration needed to account for any heat leak resulting from any differences between bucket and jacket temperatures during the run The test continues until the controller determines that equilibrium has been reached, usually within 8 to 10 minutes after firing, at which point it signals the operator to return to the calorimeter to remove the bomb and prepare it for the next test.

The operator does not have to wait for the jacket temperature to cool before starting another run. A new test can be started immediately. The jacket temperature is controlled automatically and is usually set slightly higher than room temperature, although any temperature preferred by the operator can be used. Obviously, for best results all tests should be conducted within the same operating range.

THE ISOPERIBOL/DYNAMIC METHOD

As an alternative to the equilibrium method, Parr has developed an Isoperibol/Dynamic method for use in the 1261 Calorimeter which cuts the time required for an individual test almost in half. Using this procedure the test is run in the same manner as described above for the equilibrium method, but with the controller instructed to employ a sophisticated curve matching technique to compare the temperature rise with a known thermal curve for the system. Using this comparison, the controller can extrapolate and predict the final temperature without waiting for it to develop, making it possible to terminate the test and compute the calorific value of the sample in periods as short as 3 to 4 minutes after firing. The savings in operating time with this method will become particularly significant when running multiple samples

ATTAINABLE PRECISION

The precision attainable with the rapid Isoperibol/Dynamic method is fully comparable to results obtained with the Equilibrium method. Routine comparison tests with standard samples have shown standard deviations of 0 05 to 0 08 percent of the determined value for both the Isoperibol/Dynamic and the Isoperibol/Equilibrium methods. It should be noted, of course, that in comparison tests with a non-homogenous material such as coal, the results may show a wider spread than tests with a uniform sample such as benzoic acid. Nevertheless, all results obtained with the 1261 Calorimeter should fall well within approximately one-half of the 50 Btu/lb repeatability limits specified in standard ASTM/ANSI test methods. Replicate tests with a bituminous coal sample will seldom differ by more than 30 Btu/lb.

COMPARATIVE OPERATING SPEEDS

1261 Calorimeter	Operating Mode	
	Isoperibol/ Equilibrium	Isoperibol/ Dynamic
Time for a single test	10 to 12 min	6 to 8 min
Complete tests per hour	5 to 6	8 to 10

49

The 1261 Calorimeter

Operates in a compact, self-contained jacket with a built-in oxygen filling system.

EFFECTIVE THERMAL JACKETING

Outstanding thermal jacketing is provided in the 1261 Calorimeter by a circulating water system which maintains a forced flow around the sides and bottom of the bucket chamber and through the cover as well. The water in this system is recirculated continuously by a built-in, high capacity pump. Since all tests are run by isoperibol methods, the jacket temperature remains constant during a run and no water additions are needed. Also, no water additions or waiting period are required at the end of a run since the jacket does not have to be recycled back to a fixed starting temperature. Jacket heating is provided by a sealed immersion heater operated by the calorimeter controller in conjunction with a built-in thermistor probe.

MOLDED FIBERGLASS AND BRASS CONSTRUCTION

To ensure minimal heat leak and long service life, both the outer case and the water jacket are made of a high strength, compression molded, fiberglass reinforced polyester resin. These parts are assembled into a sturdy, light weight structure which can be used with acidic water supplies or in a corrosive laboratory atmosphere without damage to the instrument. The inner bucket chamber is made of nickel brass for good corrosion resistance and proven heat transfer characteristics.

A RELIABLE OXYGEN BOMB

Each 1261 Calorimeter is equipped with a Parr 1108 Oxygen Bomb in which samples can be burned completely and safely with full recovery of all combustion products. The bomb is held in an oval bucket, covered with two liters of water. An impeller driven by a motor mounted within the cover produces excellent circulation around the bomb.

A BUILT-IN OXYGEN FILLING SYSTEM

To increase the speed, reliability and safety of the bomb filling operation, the 1261 Calorimeter has a built-in automatic system for filling the bomb with oxygen to the desired operating pressure This is installed within the calorimeter, leaving only a short filling hose extending from the jacket To fill the bomb the operator simply slips a connection fitting onto the bomb inlet valve and pushes a button to start the filling sequence Filling then proceeds automatically at a controlled rate to a pre-set pressure. He then lifts

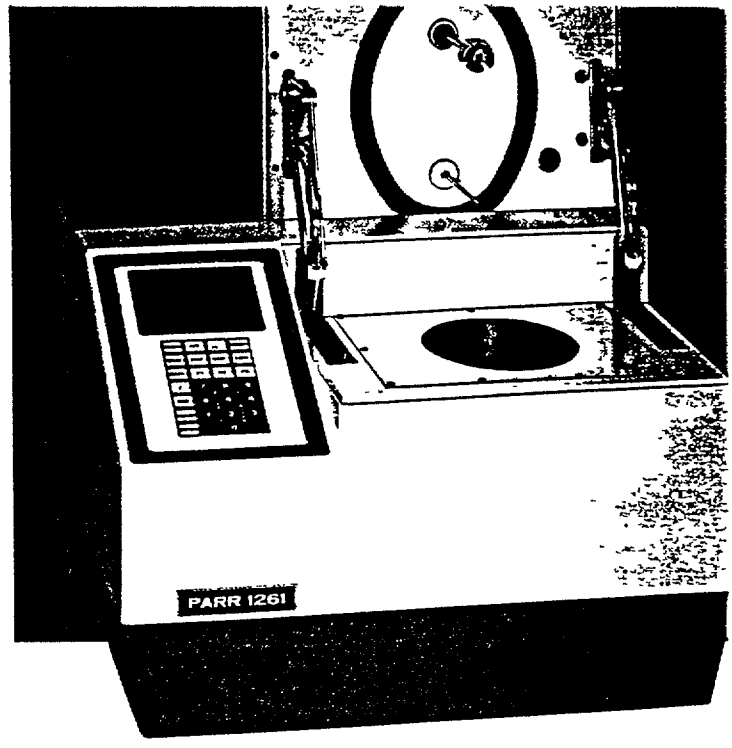

the connector from the bomb and proceeds with the test. If, for any reason, the bomb pressure did not reach the desired level, an error message will indicate a low charge The filling rate is regulated so that oxygen enters the bomb at a uniform, controlled rate, avoiding any sudden blast that might blow a powdered sample out of the combustion cup. Safety provisions are included to prevent an accidental overcharge to the full pressure of the oxygen supply tank.

PRECISE ELECTRONIC THERMOMETRY

Temperatures are measured with a high precision electronic thermometer built into the calorimeter, using a specially designed thermistor network to obtain excellent linearity and high resolution in differential temperature measurements. This custom designed system with its associated software provides a uniform scale over a wide range of operating temperatures so that the energy equivalent (EE value) for the calorimeter remains remarkably constant as compared with less stable systems using diodes or other temperature sensors This stability is confirmed by many users who report that they find it necessary to recheck the energy equivalent only once or twice monthly unless a major component of the system has been changed.

The temperature sensor is sealed in a 1/8" dia stainless steel probe held in a fixed mounting on the calorimeter cover, where it is raised and lowered with the cover Measurements over the 20° to 40° C working range can be obtained with 0.0001° C resolution The absolute accuracy is less precise (+/−0 1° C) but this does not affect differential measurements. Tailored software converts all readings to Celsius values instead of ambiguous resistance units No mercurial thermometers are required.

The 1261 Calorimeter

Convenient touch-panel keyboard operation with many options

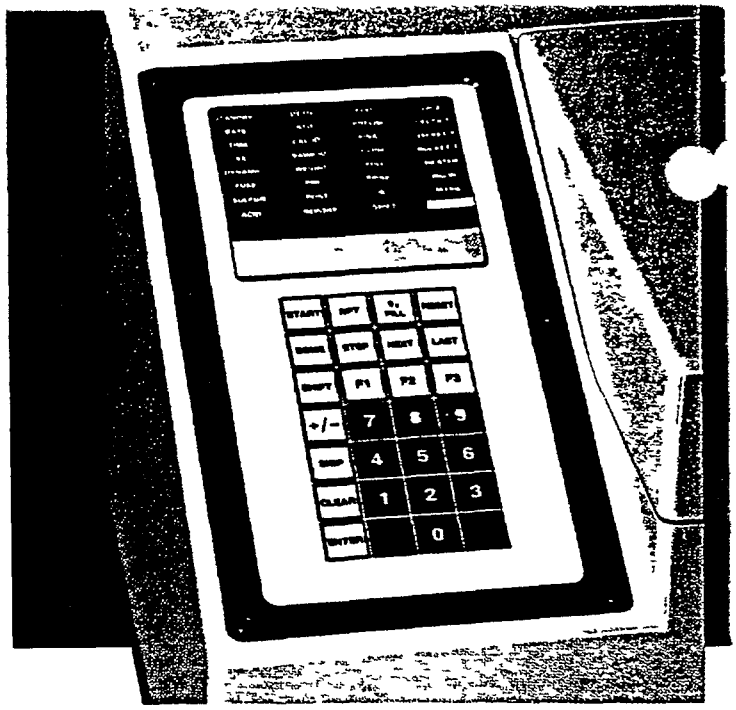

MANY UNIQUE FEATURES

All steps in the operation of a 1261 Calorimeter are controlled from a sealed, touch-panel keyboard mounted on the calorimeter together with a bright LED display for data verification and prompting From this keyboard the operator can control all operations involved in a calorific test, using the many unique features built into this automatic system, including:

Selectable procedures. The operator can choose either the conventional Isoperibol/Equilibrium test method or a faster Isoperibol/Dynamic procedure, depending upon the speed desired for his particular application.

Automatic control. The microprocessor will (a) continuously monitor and control the jacket temperature, (b) detect equilibrium, fire the bomb, confirm that ignition has occurred and monitor the temperature rise, and (c) terminate the test within operating parameters selected by the user and check for errors.

Automatic computation. The microcomputer will not only collect and evaluate all data, but it will also (a) apply the necessary correction for heat loss, (b) calculate and apply the appropriate corrections for acid, sulfur and fuse, and (c) compute and report the heat of combustion in units selected by the user

Data acquisition and storage. All sample weights and temperature data are accepted and retained by the calorimeter

Large memory capacity. Data for up to 175 tests can be retained in the memory until called up by the operator.

Back-up power supply. Battery back-up is provided to protect the memory so that no data will be lost if the power should fail.

Operator prompting. Clear, LED actuated messages describe the current status of the test and identify the specific data which must be entered so that a test or reporting procedure can continue

Menu driven setup program. When operated with a 1755 Printer, the calorimeter may be configured automatically using a menu driven, conversational program provided in the calorimeter firmware This setup program is available at any time to set, change or view the commonly used operating parameters.

Diagnostic tests. The controller will make extensive diagnostic tests to ensure that the calorimeter is functioning properly and to identify any errors or problems.

AUTOMATIC STANDARDIZATION

The 1261 Calorimeter will automatically generate its energy equivalent (EE value) from a series of standardization tests, calculating a mean value from either (a) all standardization tests, or (b) from the last 10 tests for each bomb/bucket combination. The user can enter the maximum relative standard deviation he will accept for a series of standardization tests and the calorimeter will advise him if his standardization fails to meet this criteria. Energy equivalent values for up to eight bomb/bucket combinations can be stored in the computer.

MAINTAINS STANDARDIZATION

One of the most important characteristics of the 1261 Calorimeter is its ability to maintain a constant standardization. There should be no annoying fluctuations in the energy equivalent from morning to afternoon, or from winter to summer. This can be attributed largely to an effective water jacket which isolates the calorimeter from temperature changes in the laboratory and to a system with no paths for significant heat leaks Also, any change in pressure in the water supply line will not affect calorimeter operations or change the energy equivalent since the calorimeter does not require a pressurized water supply for its operation. Features introduced when the calorimeter is operated with the recommended 1563 Water Handling System add further to its ability to maintain constant standardization, since the 1563 System ensures that the bucket will always be filled with water at a constant temperature within +/−0.5° C, and the volume of water placed in the bucket will always be the same when delivered from an automatic pipet.

Options and Specifications

MANY USER OPTIONS

Although specific procedures are recommended, various options are available to the user

- Program parameters can be adjusted to accommodate unusual sample sizes, burning rates and precision requirements
- The calorimeter can be programmed to accommodate any reagent concentrations selected by the user
- Calorific values can be reported in any of several measurement units.
- The calorimeter program can be adjusted to compensate for the subtle differences in the way acid correction values are handled in ASTM, BS and ANSI Methods.
- Programmable function keys are available for operating convenience.
- Program controls can be password protected, if desired.
- User selectable default parameters.
- A bomb usage tally can be maintained to notify the user when each bomb should be serviced.
- Program parameters can be selected to support all currently manufactured Parr combustion calorimeter bombs.

PRINTED REPORTS

A printed record of all essential data and results from each test, including detailed error and diagnostic messages, can be obtained by connecting the calorimeter to a Parr 1755 Printer described on page 9, or to any 40/80 column commercial printer compatible with an RS232C output

AUTOMATIC DATA TRANSFER

The calorimeter is Smart Link ready for use with any of the balance, sulfur or computer interfaces designed for this system, as described on pages 11 & 16.

COMPATIBLE MODULAR DESIGN

The 1261 Calorimeter is fully compatible with existing Parr bombs, calorimeter controllers, closed-circuit water handling systems and all Parr Smart Link devices, making it easy to fit the instrument into an existing laboratory set-up Modular design with all electronics assembled in a removable chassis simplifies trouble shooting problems Also, the calorimeter is equipped so that it can be connected through a phone modem direct to the Parr Instrument Company factory computer for trouble shooting or for program parameter up-dates

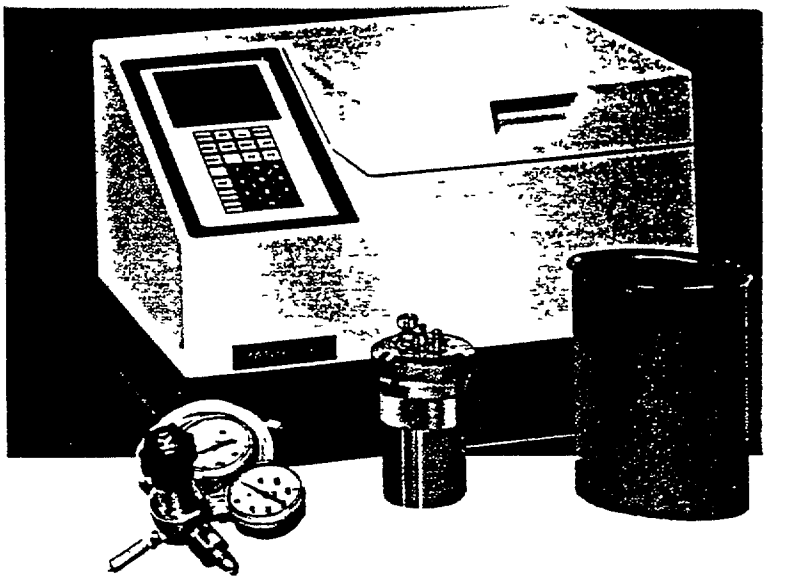

SPECIFICATIONS

Available Test Procedures	Isoperibol/Equilibrium Isoperibol/Dynamic Determination Standardization
Stored Energy Equivalent EE Values	8
Corrections for Acid, Sulfur and Fuse	Automatically from Sulfur Analyzer, by Operator Entry, or by Fixed Corrections
Data Display	LED
Operator Prompting	LED
Diagnostics	LED with printed error and diagnostic messages
Storage Capacity, normal	175 Tests
Electrical	Separate Models: 110-125 v 60 Hz 210-250 v 50 Hz
Power Requirements	1000 watts, maximum
Dimensions	20" wide, 15"deep, 14" high

ACCESSORIES

Six fuel capsules, fuse wire for 500 tests and a stand for holding the bomb head during assembly are furnished with each calorimeter, also a bottle of 100 benzoic acid pellets for standardizing the calorimeter and complete operating instructions

ORDERING INFORMATION

1261EA **Isoperibol oxygen bomb calorimeter with 1108 oxygen bomb, 115 v 60 Hz.** (For 230 v 50 Hz, use Cat No. 1261EF)

50

The 1760 Sulfur Analyzer

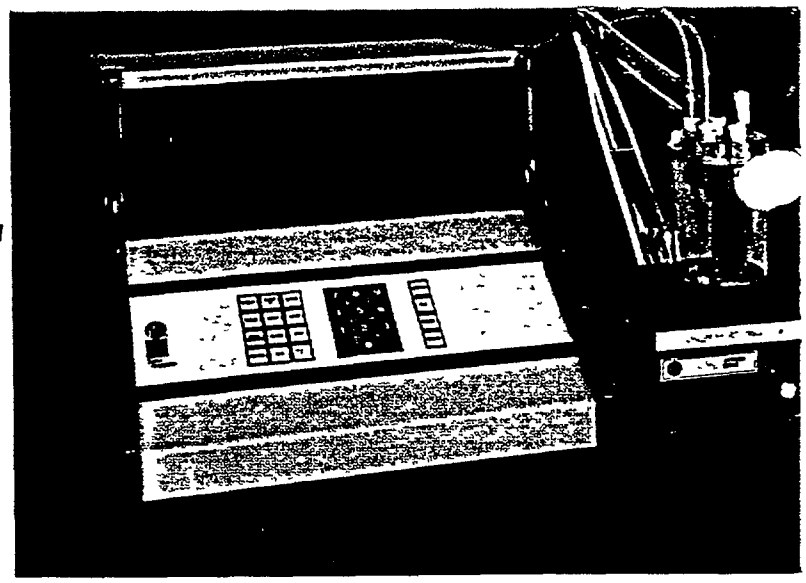

An automatic titrimetric system for rapid sulfur determinations following combustion in a Parr oxygen bomb.

RECOMMENDED FOR

Coal mine, coal preparation plant, coal burning utility, commercial inspection and other industrial laboratories where sulfur determinations for solid or liquid fuels and combustible wastes are run daily on a routine basis, and where rapid tests with good repeatability are required. It is also an attractive, moderately priced, automatic system for laboratories where calorimetric tests are run on an intermittent basis, and where reliable results with good repeatability are required.

COMPATIBLE WITH BOMB CALORIMETRY

Although the 1760 Analyzer can be operated as a stand-alone instrument, in most installations it will be used in conjunction with a Parr oxygen bomb calorimeter. In these cases, sulfur determinations will be made using the calorimetric sample and no additional sample or weighings will be required. The operator will simply collect the washings from the bomb following a calorimetic test and place them in the Analyzer to obtain:

- A complete sulfur determination in less than five minutes for samples ranging from 0.1 to 5 percent sulfur, with accuracy and precision well within ASTM test requirements
- Automatic titration of the total acid in the bomb washings as required to calculate the calorific value of the sample
- Full communication capabilities for automatically transferring sulfur and total acid values to a Parr Calorimeter or Calorimeter Controller, and/or to a 1750 Proximate Analyzer or computer for incorporation into calorimetric, proximate, or other complete fuel test reports.

PROVEN PROCEDURES

For more than 50 years, standard ASTM methods for determining sulfur in solid and liquid fuels have been based upon the analysis of bomb washings following combustion of a sample in an oxygen bomb This same reliable procedure is used to prepare samples for the 1760 Analyzer, ensuring complete conversion of all sulfur to soluble sulfates in the process But the final sulfur assay is made by a rapid titrimetric procedure instead of the tedious gravimetric method This procedure is based upon a method described by Hicks, Fleenor and Smith* in which the soluble sulfates in the bomb washings are titrated with a lead perchlorate solution to obtain a lead precipitate The titration is performed in a non-aqueous medium to ensure complete precipitation and a sharp end-point as determined with a lead-ion selective electrode. Titration in the 1760 Analyzer preceeds automatically under microprocessor control, determining first the total acid in the bomb washings, then bringing the solution to the proper pH for the sulfate titration and continuing to an end-point from which the Analyzer will calculate and report the sulfur content of the sample. Chloride and other ions found in many coal samples do not interfere with this ion-specific titration.

A COMPACT, AUTOMATIC TITRATION SYSTEM

Automatic titration in the 1760 Sulfur Analyzer is conducted in a 600 ml beaker held on a magnetic stir plate using a stir bar for agitation All of the necessary electrodes and reagent discharge tubes are mounted on a non-metallic cover attached to an adjustable arm arranged so that all sensor and tubes can be lowered into the beaker and raised as a unit. Reagents used in fixed amounts are delivered from bottles with attached manually operated automatic pipets furnished with the instrument. The titrants are fed by high precision metering pumps driven by high resolution stepper motors operating under microprocessor control. All reagent concentrations have been selected to produce good precision with optimum operating speed.

SAMPLE SIZE

The 1760 Sulfur Analyzer is designed for use with one gram samples, the size usually burned in Parr oxygen bombs. This amount of sample works well for materials having sulfur contents between 0 1 and 5 0 percent. If the sulfur content runs higher, the sample size should be reduced so that the amount of sulfur in the test does not exceed 75 milligrams

RAPID TESTS

Both the total acid and percent sulfur can be determined within five minutes after completion of the bomb process. The time required for the automatic titration will be roughly proportional to the amount of sulfur in the sample

*"The Rapid Determination of Sulfur in Coal," Analytical Chemica Acta., 68, 480-3 (1974)

51

USE WITH EXISTING EQUIPMENT

The 1750 Analyzer does not require a special oven, furnace or analytical balance. Existing procedures do not have to be changed. All drying and ashing operations are performed in the same oven and furnace normally used for standard ASTM proximate analyses. The Analyzer can be programmed to communicate with any of the commonly used digital analytical balances. Samples can be weighed and treated in any order with the Analyzer accepting data from a balance as generated, organizing and storing it in the correct order under operator assigned sample numbers. The operator can override the automatic data system at any time to enter weights manually, if necessary. Weights taken on a non-digital trip balance or scale to determine air-dry loss (ADL) can be entered manually, or the ADL value can be calculated and entered separately ADL values can also be determined automatically using a 1750A Air-dry Loss Interface connected to a top loading balance. With this arrangement the 1750 Analyzer can be instructed to obtain ADL/total moisture values direct from the 1750A Interface.

CONVENIENT KEYBOARD OPERATION

With the 1750 Analyzer connected to a digital analytical balance, each weighing will be shown on the LED display on the Analyzer for confirmation before it is entered into memory The operator will then use the touch panel keyboard to identify each entry as to the test (moisture, ash, volatile matter or air-dry loss) and the function (tare, gross or final weight) to which the data applies The Analyzer will also prompt the operator to identify the data with a valid sample number before it is entered.

```
PROXIMATE ANALYZER      REVISION 50.33E

SAMPLE  ID        25        FINAL REPORT

            ADL     MOIST    ASH      VM
TARE        2218.  15.6908 17.6908 16.7701
GROSS       6711.  16.6925 18.6741 17.7709
FINAL(%)    6577.  16.6741 17.8542 17.4792

AS RECD      2.98    4.76   16.12   29.50
AS DETR              1.84   16.62   27.31
DRY                         16.93   27.82
DAF                                 33.49

             FC     SULFUR   BTU
AS RECD     52.62    2.13 12122.8
AS DETR     54.24    2.25 12495.2
DRY         55.25    2.29 12729.9
DAF         66.51    2.76 15322.7
```

Printout from 40-Column Printer

SELECTABLE REPORTS

The user can select from a variety of preprogrammed options when obtaining final reports from the Analyzer. Proximate analyses can be obtained for an individual sample or from a full range of tests. All supporting raw data can be included in the report, or the report can be condensed to show only final values

AIR-DRY LOSS INTERFACE

Air-dry loss determinations are usually made using large (1000 gram) samples on a top-loading balance, often located in a facility outside of the laboratory where other coal tests are performed. To facilitate the transfer of ADL test data to the Proximate Analyzer, Parr offers the **1750A Air-Dry Loss Interface** which can be connected directly to a digital top-loading balance at the location where ADL weighings are performed. Tare, gross and final weights can then be collected automatically in the 1750A Interface and transmitted to the 1750 Proximate Analyzer over a Smart Link for incorporation into the final proximate analysis report. Without this arrangement, ADL weighings must be entered into the Analyzer through the keyboard.

The 1750A Interface looks and works exactly like the 1750 Proximate Analyzer, but it will be instructed to gather and transmit only ADL data. Again, the user must specify the make and model of his balance when ordering the 1750A Interface so that the proper communications protocols and cables can be furnished.

INSTALLATION ASSISTANCE

Installation and operation of the 1750 Proximate Analyzer should proceed smoothly with little difficulty using the detailed instructions furnished with each instrument But, since each installation is unique, users are urged to call the Parr Instrument Company direct (309/762-7716) for assistance in adapting peripheral devices to a 1750 Proximate Analysis System.

ORDERING INFORMATION

1750	**Proximate analyzer** with connecting cable to an analytical balance (specified by the user) 115/230v, 50/60 Hz.
1750A	**Air-dry loss interface,** 115/230v, 50/60 Hz.
A597E	**Smart link cable,** 25 ft

52

The 1750 Proximate Analyzer

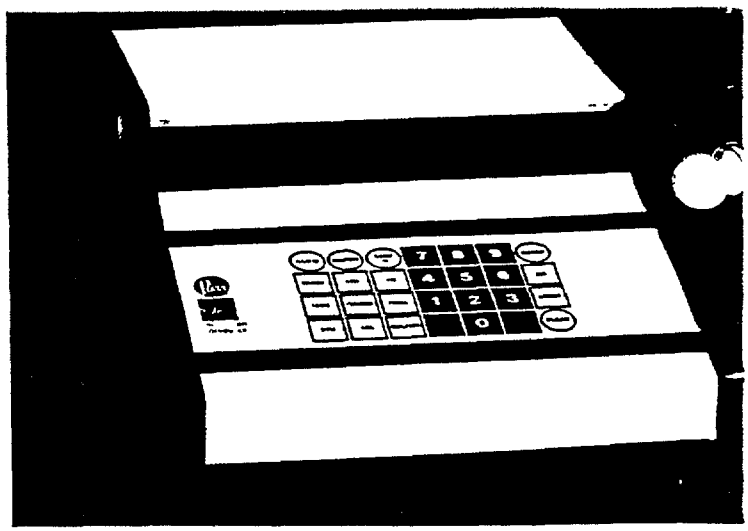

A rapid data processing system for calculating and reporting the proximate analysis of coal.

RECOMMENDED FOR

Assembling data, calculating and reporting the proximate analysis of coal, coke and related fuel samples as tested in coal mine, coal preparation plant, coal burning utility, commercial inspection and other industrial laboratories where coal samples are tested daily on a routine basis.

A FULLY INTEGRATED DATA PROCESSING SYSTEM

The proximate analysis of a coal sample is a tedious procedure involving several separate weighings and producing considerable data as needed to calculate:

Air-dry moisture **Volatile matter**
Total moisture **Fixed carbon**
Ash

There is no way to avoid the individual weighings and heatings involved in these separate determinations, but the data entry, data processing and reporting functions can be speeded and simplified considerably using the convenient microprocessor system provided by a Parr 1750 Proximate Analyzer.

Operating in conjunction with a moisture oven, furnace and analytical balance already on hand in a user's laboratory, the 1750 Proximate Analyzer will

- **Accept and retain all individual weighings** obtained during the series of steps required to determine air-dry moisture, total moisture, volatile matter, fixed carbon and ash.
- **Organize and store all test data** for up to 100 samples, accepting the data as it becomes available from a digital balance Samples can be weighed and treated in any order with the Analyzer accepting the data as generated, organizing and storing it in proper sequence under operator assigned sample numbers
- **Collect and store sample weights for calorimetric determinations.** If a 1750 Proximate Analyzer is used with a 1261 Calorimeter (or with a 1241 Calorimeter equipped with a 1720 or 1730 Controller) the 1750 Analyzer will provide all of the functions of a 1741 Balance Interface, and a separate Balance Interface will not be required. Each weighing will be shown on an LED display before it is entered into memory, with the Analyzer prompting the operator to identify each entry with a valid sample number. Weights can also be entered from a keyboard The Analyzer will collect and hold all sample weights for calorimetric determination until called up by the calorimeter.
- **Collect and store sulfur values** from a 1760 Sulfur Analyzer to be included in a consolidated proximate analysis report.
- **Calculate air-dry moisture, total moisture, volatile matter, fixed carbon and ash** for each sample on any of four reference bases:

As-received	**(AR)**	**Dry**	**(DRY)**
As-determined	**(AD)**	**Dry, ash-free**	**(DAF)**

- **Convert calorific and sulfur values** to any of the moisture reference bases listed above.
- **Produce a consolidated proximate analyses report** for each valid sample (including calorific value and sulfur) by feeding all collected reports to any of the following:
  A Parr 1755, 40-column printer or an 80-column commercial printer.
  A 1261 Calorimeter with a Parr 1755 Printer
  A central computer.
  A laboratory or personal computer connected on a Parr Smart Link.
- **Produce full or partial reports** at any time for an individual sample or for a full range of tests Reports can include all supporting raw data or can be condensed to show only final values.

52

CONTROLOTRON

Models 990DBN
and 990DBP

Universal Dedicated & Portable Dual Path Clamp-On Transit-Time Flowmeters

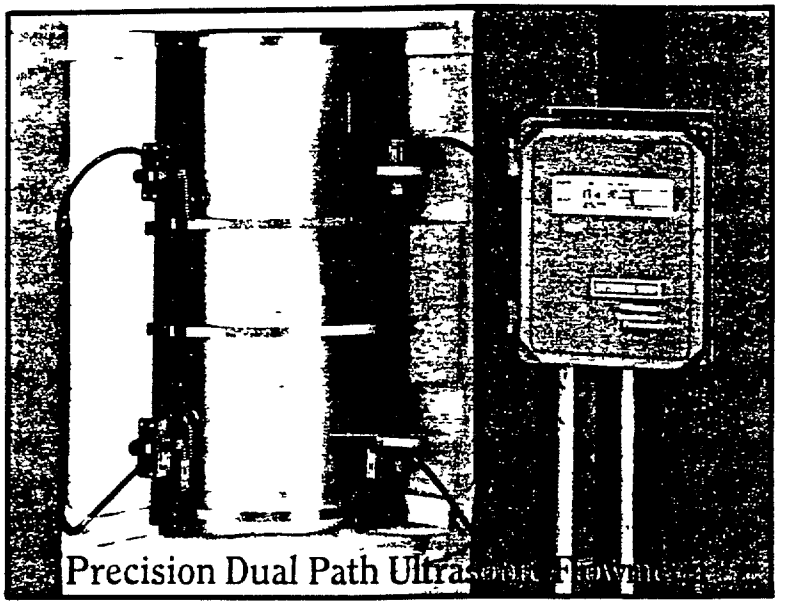

DESCRIPTION

Models 990DBN and 990DBP are precision Dual Path Universal Clamp-On Transit-Time Ultrasonic Flowmeters of NEMA 4X and Portable construction respectively They are intended for application wherever high accuracy, for either custody transfer or regulatory requirements, is demanded They maintain their high performance even when located close to elbows or other upstream disturbances Both offer field programmability for essentially any pipe size and operate with essentially any liquid. They replace and outperform most conventional intrusive flowmeters even in their best applications and provide all industry standard analog and digital data outputs, LCD Digital or Graphics display, with integral Datalogger and Stripchart printout

Series 990DB Uniflow measures flow by means of two orthogonal ultrasonic beams, preferably operated in the reflect mode This makes the system extremely resistant to flow profile distortion, crossflow or flow swirl errors, normally caused by upstream bends, gate valves or short straight run conditions Its Clamp-On construction makes it simple to install in existing installations, or as a precision replacement for high maintenance Turbine, Venturi and Wetted Transducer 4 Path Chordal ultrasonic flowmeters

The 990 Family includes both Dedicated and Portable models Portable models can be used to quickly evaluate the performance which will be provided by the Dedicated models Dedicated NEMA 4X 990DB models are suitable for operation in almost any environment, indoors or outdoors, and at pipe temperatures up to 500°F

FUNCTIONS

Series 990D offers the following optional functions

- Industry Standard Analog and Digital Data Outputs
- Digital Flow Rate and Total Display
- Graphics Display with Stripchart and Datalogger
- RS-232 Serial I/O Data/Command Communication
- Field Programmable Status Alarms Relay Outputs
- Memorized Flow, Site and Diagnostic Data Printout

FEATURES

- Universal Applicability
- Outperforms Conventional Intrusive Flowmeters
- Lower Cost/Higher Reliability than Intrusive Flowmeters
- User Friendly Menu Driven Field Programmable Site Setup
- Non-Intrusive Universal Clamp-On Transducers
- MultiPulse® Transmission
- No Cutting of Pipe Ever Required
- Batch and Sampling Capability Built In
- Calibratable to 1/4% of Flow Rate
- Bi-Directional Flow Measurement

54

WHAT IT DOES

Models 990DBN and 990DBP measure the flow of most liquids in most pipes between 6 and 360 inch diameter, and with flow rates of ±40 ft/sec, and temperatures up to 500°F They are intended as high performance replacements for Turbine, Venturi and 4 Path Wetted Chordal ultrasonic flowmeters

HOW IT WORKS

System 990DB Dual Path transducers operate in Reflect mode to prevent crossflow error Orthogonal transducer path orientation prevents error due to distorted flow profile

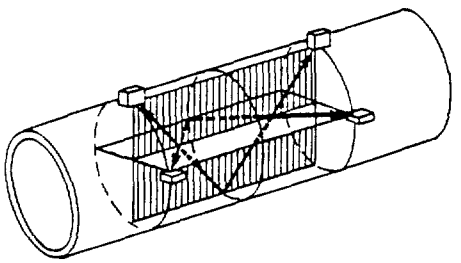

WHERE TO USE

Series 990DB is intended for high precision or custody transfer applications of petroleum products, chemicals or water Dual orthogonal path Reflect Mode operation, equivalent to 4 paths, is highly resistant to distorted flow profile, crossflow and swirl conditions This makes 990DBN ideal for Nuclear Feedwater, Interstate Oil Pipeline, Hydro-Power Turbine and Irrigation Turnout flow measurement applications The 990DBP is functionally identical to the NEMA 4X 990DBN Portability facilitates use as a test device, or in applications which do not require continuous flow measurement

SPECIFICATIONS

APPLICABILITY

LIQUIDS. Any sonically conductive homogeneous fluid
LIQUID (PIPE) TEMPERATURE. −40°F to +250°F Standard
−80°F to +500°F Optional
PIPE SIZES 6 to 360 inches OD
PIPE MATERIAL: Any sonically conductive pipe material Metal, Glass, Plastic, etc
PIPE WALL THICKNESS. 0 05 to 3 00 inches
LINER MATERIAL. Any sonically conductive material Glass Plastic, Cement, etc , intimately bonded to the pipe interior
LINER THICKNESS. Up to 1 inch, dependent on material
FLOW VELOCITY RANGE. ±40 fps, min , dependent on pipe OD and mounting track type

991 CLAMP-ON TRANSDUCERS

PIPE SIZE RATINGS
- Group 3 6 to 24 inches, OD
- Group 4 20 to 48 inches, OD
- Group 5 36 to 360 inches, OD

RATING. Intrinsically safe. Radiation Resistant and Submersible available
CONSTRUCTION: Aluminum, stainless steel and special alloy or plastic
CONNECTORS. Conduit for NEMA 4, BNC for Portable

992 MOUNTING TRACKS

- Available in Direct or Reflective Mounting for all transducer sizes in standard pipe diameter ranges
- PinStop transducer spacing standard for all models

994 FLOW COMPUTER

- POWER. 20 W, 9 to 36 VDC or internal Battery, 100/115 or 230 VAC, 1ϕ
- TEMPERATURE: −5°F to +115°F (except for Graphics Models)
- SIZE. 10.5"W, 9" D, 13" H
- WEIGHT 12 8 pounds
- RATING. Intrinsically safe, NEMA 4X with cover closed
- MODULES. Plug-In Interchangeable W/O special tools
- RANGES. Size 4 Transducer Sizes 3 and 4
  Size 5. Transducer Sizes 3, 4 and 5

994 PERFORMANCE (Standard Conditions)*

- SENSITIVITY: 0.001 fps at any flow rate including zero
- LINEARITY: 0 003 fps
- RESPONSE BANDWIDTH: 10 Hz (settable)
- SLEW RATE. 20 ft/sec/sec
- FLOW PROFILE COMPENSATION Via liquid viscosity entry
- ZERO DRIFT STABILITY: 0 005 fps for transducer sizes 3 to 6

995 HAND HELD CONTROL/DISPLAY TERMINAL

- 2 Row 32 character Liquid Crystal Display
- 30 Keys, Numeric or Function identified

* Submit Application Information Form for estimate of performance under specific application conditions.

55

HOW TO ORDER & SPECIFY SERIES 990DB

Selecting the most appropriate model and optional functions and features, offered in System 990DB, is quite simple, especially if you follow the procedure below However, feel free to call on your local Controlotron representative for assistance if needed

The Uniflow part numbering system is a guide to the process of selecting your preferred model, as well as producing the part numbers of all the system components The procedure below gives you an opportunity to consider the many Uniflow system options offered Check with your local Controlotron representative to assure selection of compatible Dedicated model functions Note, however, that standard Portable Uniflow Systems are supplied fully loaded, with all available functions and features

System 990 Dedicated Models use a "Building Block" System This permits you to order only those functions that you actually need for your application, so as to keep your costs as low as possible If, at a later time a new function is required, most can be added merely by plug-in of the desired Function Module into a compatible 994 Flow Computer

Uniflow Systems include the following Components

- **Series 991 Transducers**
- **Series 992 Transducer Accessories**
- **Series 994 Flow Computer and Function Modules**
- **Series 995 Hand-Held Control Display Unit**
- **Series 996 Remote Accessories**

Specifying and ordering System 990 Uniflow equipment involves the following steps

1. Specify the Components of your selected system, choosing the component options which contain your desired features
2. Specify the desired optional plug-in Function Modules and/or Remote Accessories by part number below
3. Obtain the price and delivery of your selected components, and place your order with Controlotron either through your local Representative or Factory Direct

Listed below are the part numbers for all Uniflow system components To construct the component part number which has your desired options replace the part number LETTERS with the appropriate CODE symbols listed below

991ABC-D TRANSDUCER	**A=MODEL** N=NEMA 4	**B=TYPE** M=Metal Body P=Plastic Body V=Sonic Velocity	**C=TEMPERATURE** S=250°F max H=375°F max VH=500°F max *	**D=SIZE** 3=6" to 24" pipe OD 4=20" to 48" pipe OD 5=36" to 360" pipe OD				
992MTABCD-E MOUNTING TRACK	**A=MODEL** N=NEMA 4	**B=TYPE** D=Direct Beam R=Refelct Beam	**C=STYLE** M=Metal XDCR P=Plastic XDCR	**D=MATERIAL** A=Aluminum S=Steel SH=For VH XDRS	**E=PIPE OD RANGE (min)*** 3=6" to 24" pipe OD 5X=6' to 10' pipe OD 4=20" to 48" pipe OD 5Y=10' to 18' pipe OD 5=36" to 84" pipe OD 5Z=18' to 30' pipe OD * See 990SLECT Manual			
992CAB-C TRANSDUCER CABLE	**A=MODEL** N=NEMA 4	**B=ENVIRONMENT** S=Standard Temp W=Submersible Kit	**C=LENGTH** C=Length in ft	**992MTM-A MAGNETIC TRACK MOUNT KIT**	**A=PIPE OD RANGE** 4=20" to 48" pipe OD 5=48" to 216" pipe OD 6=18' to 30' pipe OD			
993ABC APPLICATION FUNCTION AND CONTROL MODULE	**A=MODEL** C=Control Only Module M=Memory and Control Module		**B,C=CODES RESERVED**					
994ABCD-EF FLOW COMPUTER	**A=MODEL** DBN=NEMA 4X DBP=Portable	**B=PIPE OD RANGE** 4=6" to 48" 5=6" to 216" 6=6" to 360"	**C=DISPLAY** B=Blind G=Graphics D=Digital GL=Lighted Graphics	**D=POWER SOURCE** S=100/115 VAC M=230 VAC B=9 to 36 VDC SB=115 VAC + Battery MB=230 VAC + Battery	**E=PROGRAM LOAD** 1=Basic Data 2=Add RS-232 & Datalog 3=Add Graphics + Stripchart	**F=SPECIAL** N(n)=CC Nuclear Grade S(n)=Intrinsically Safe		
994-7 ANALOG COMPUTER	Provides Programmable Isolated 4 to 20 mA 0 to 10 VDC and Pulse Rate Outputs one required per channel							
994-10ABC ALARM RELAY MODULE	**A=MODEL** N=NEMA 4	**B=TYPE** A=Normally Open B=Normally Closed	**C=RATING** D=Dry Reed (10 VA max) M=Mercury Wetted (50 VA max) (Not available in Portable Units or in NC Type)					
994-11ABC LCD DISPLAY COMPUTER	**A=MODEL** D=Digital Display G=Graphics Display	**B=TYPE** D=Dual Path	**C=CODE RESERVED**					
994-12ABC RS-232 I/O MODULE	**A=MODEL** T=995 Hand Held Terminal Driver Only S=RS-232 and 995 Drivers		**B,C=CODES RESERVED**					
995T HAND-HELD CDU TERMINAL	**996P PRINTER**	**996P-5 PRINTER PAPER, 5 PACK REFILLS**	**996PSP-A PIPE SIMULATOR**	**A=XDCR SIZE** A=0 1 2 3 or 4	**996DABC REMOTE DISPLAY**	**A=TYPE** D=Digital	**B=MODEL** N=NEMA 4X P=Panel Mount	**C=POWER SOURCE** S=110/115 VAC M=230 VAC

* Transducers operated above 400°F will require periodic refurbishment, with periodicity proportional to operating temperature For extreme temperature operation, factory consultation is recommended

TYPICAL SPECIFICATIONS

The flowmeter furnished shall be the Controlotron System 990DB Uniflow Clamp-On Dual Path Transit-Time Ultrasonic type, or approved equivalent, and shall contain the features listed below

- MultiPulse™ Flow Detection
- TransX™ Ultrasonic Transmission Optimization
- Metallic Mode Conversion Wide Beam Transducers
- Made in USA
- PinStop Universal Mounting Track (no ruler scales)
- 64 × 256 Pixel Graphics Display
- Programmable Stripchart Option for Flow, Liquid Data
- Programmable 64K Memory Datalogger Option
- All Modules Plug-In, including Power Supply
- Numeric Entry Only Hand-Held Programming
- Full Diagnostic Data Access
- Plug-In Function Options
  - Analog Data 0 to 10 VDC & Isolated 4 to 20 mA
  - Alarm Relay Module 8 Programmable Relays
  - Digital and Graphics Display Computer/Driver
  - RS-232 Serial Data I/O Selectable Baud Rates
- Intrinsically Safe Construction
- Reflect or Direct Transmission Mode
- Simultaneous Individual Beam & Summed Data Display

A WORD ABOUT CONTROLOTRON

Controlotron, completing its third decade of operation, specializes in the manufacture of proprietary instruments for the measurement and control of liquids All Controlotron products are derived from Company sponsored research and development programs, the heart of our continued ability to provide new and unique instruments of outstanding value and performance characteristics, such as

Portable System 990 UNIFLOW
MultiPulse™ Transit-Time Flowmeter

Dedicated System 990
MultiPulse™ Transit-Time Flowmeter

Portable System 190 Spectra.
Portable Fourier Flowmeter

Dedicated System 190 Spectra
NEMA 4X Fourier Flowmeter

Portable 990E
Thermal Energy Flowmeter

Dedicated 990E
Thermal Energy Flowmeter

Your Local Representative

RENTAL/ PURCHASE PLAN

Users who wish to familiarize themselves with Models 990DBN and 990DBP prior to purchase may avail themselves of Rental plans (where available) Advance purchase of the 990DB Field Manual will provide detailed information beyond this brochure

CUSTOMER SERVICE

Users of Controlotron instruments enjoy the benefit of worldwide customer service organizations, available on short notice for training, application, installation, demonstration, and maintenance services Contact us or your local representative for details on these services.

2 YEAR WARRANTY

System 990 carries a limited 2 year warranty, from date of shipment, against intrinsic defects

CONTROLOTRON

155 Plant Avenue, Hauppauge, New York 11788 Phone (516) 231-3600 • Fax (516) 231-3334 • Telex 961-447

High Performance. Low Maintenance. Lower Costs.

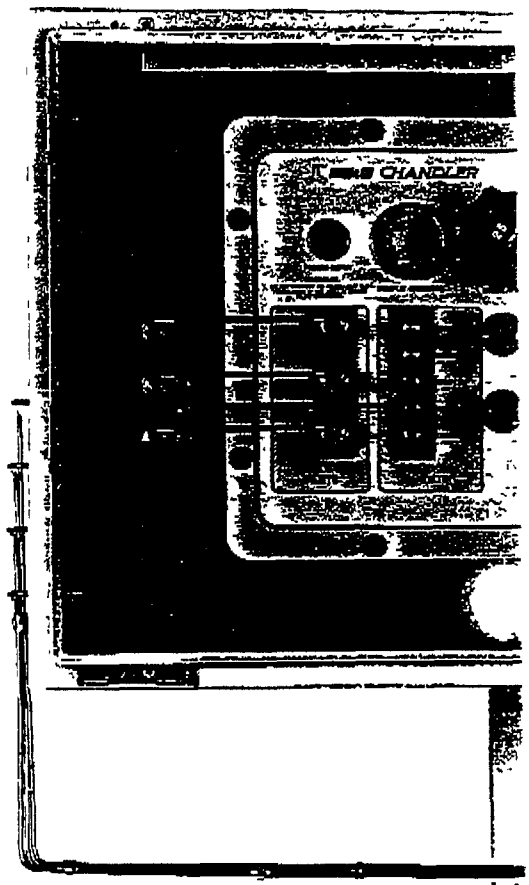

For years, the natural gas industry has needed a more reliable, field-ready on-line BTU Analyzer. One that would be easier to install, easier to operate, and easier to maintain. With true, bidirectional communications for remote control and troubleshooting. And lower costs.

Today, EG&G Chandler — a Fortune 200 company and one of the most trusted names in oil and gas equipment for over 45 years — has met the need.

The Model 2920 On-Line BTU Analyzer.

The Model 2920 BTU Analyzer System is a stand-alone gas chromatograph designed to measure the heating value of up to six natural gas streams.

Built to withstand harsh environmental conditions, it delivers the repeatability and accuracy of a laboratory gas chromatograph

Easy, On-Site, One-Site Installation.

Unlike other on-line systems, the Model 2920 System is installed on-site in a single meter house. Electronics, the chromatograph and the stream selector are all located in one structure. This makes routine maintenance easier — and dramatically reduces installation costs

Factory Mutual System

It takes only hours — not days — to put the Model 2920 System into operation, delivery to on-line analysis.

The analyzer and related options are FM-approved for use in Class I, Division 2, Groups C & D environments, with operating temperatures from -25° to 45°C (-10° to 110°F).

Flexible, Modular Design.

The Model 2920 System was designed for easy installation and maintenance.

The system consists of two compact, self-contained modules housed in rugged NEMA-4 cases. One module contains the gas chromatograph and the twin, on-board computers that run analysis operations and communications. The other module contains the stream selection unit, valving for automated gas calibration, and alarm relays.

The result? An on-line BTU Analyzer you can easily configure to match available space. The system's modular components also allow fast, easy field-repairs, for minimum downtime.

ISO 9001 CERTIFIED

58

No Learning Curve.

Some systems are so complicated, it takes hours of training and service-support to put them to work.

The Model 2920 System does away with the learning curve. The menu-driven operating system is so user-friendly, even an untrained layman can learn to run it — in minutes.

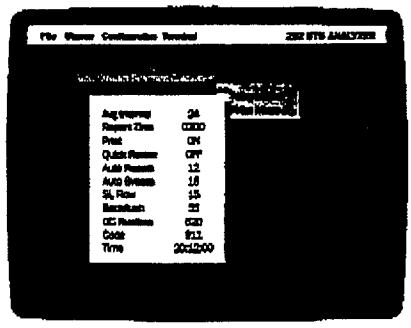

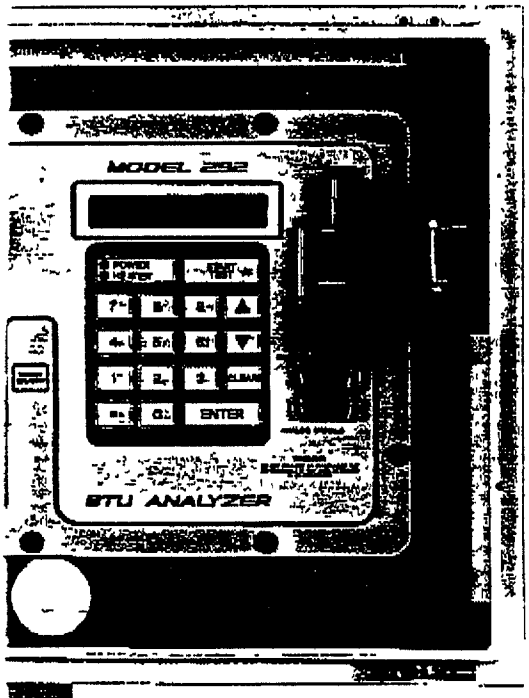

Easy To Install. Easy To Use. Easy To Maintain.

- Flexible, One-Site, One-Structure Installation For All Components. Competitor's Components must be separated.
- FM-Approved For Class I, Division 2, Groups C& D Environments.
- Dual, On-Board Computers For Simultaneous Operation & Communications.
- Remote Communications, Diagnostics & Control.
- Up To Six Natural Gas Streams.
- Accuracy Unsurpassed In The Industry.
- Repeatability Better Than ±0.5 BTU/ 1000 BTU.
- Automatic Calibration.
- Automatic Restart After Power Outages.
- Built-In Data Protection.
- Easy Maintenance Modular Design.
- Built-In Diagnostics.
- Parallel Port For Standard Printer.
- PC-Based Remote Control; Easy Interface With Industry Standard Communication Software.
- Compliance With Industry Standards: GPA, ASTM, ISO, AGA.

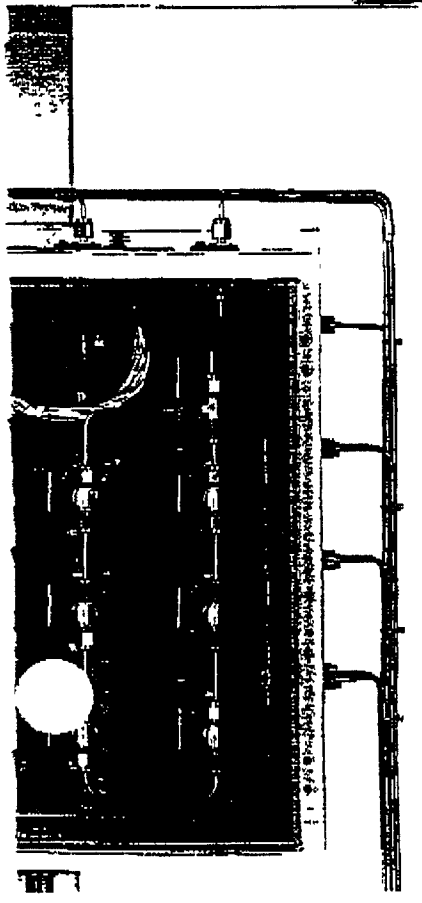

Total Off-Site Communications & Control.

Communicating with the Model 2920 System is as easy as dialing your phone. Using any computer and a standard modem, you have immediate access to all system functions and reports.

Monitor operations. Modify configuration or operating parameters. Run diagnostic tests. All from your office, home, lab, or hotel room. Even while the machine is performing an analysis.

The benefits are obvious. No more long drives to sites to modify programs or verify that your system is working properly. With the Model 2920 System, anything you can do at the unit's keypad you can also do via modem.

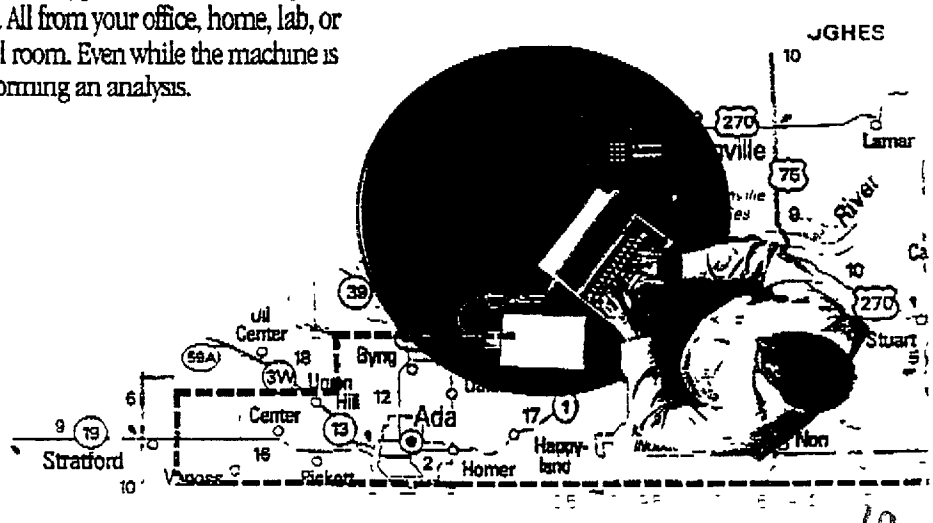

Easy Operation.

With the Model 2920 System, a simple menu guides the user through every operation step-by-step — prompting the operator for information to configure parameters for gas analysis, calibration, data retrieval, and diagnostics.

- Sampling time can be set or adjusted quickly and easily
- SI (kJ/m³) units or English units (BTU/Scf) are simply selected from the menu.
- Samples are automatically purged between analyses.
- Calibration is quick — and automatic.
- Data are password-protected to prevent tampering.

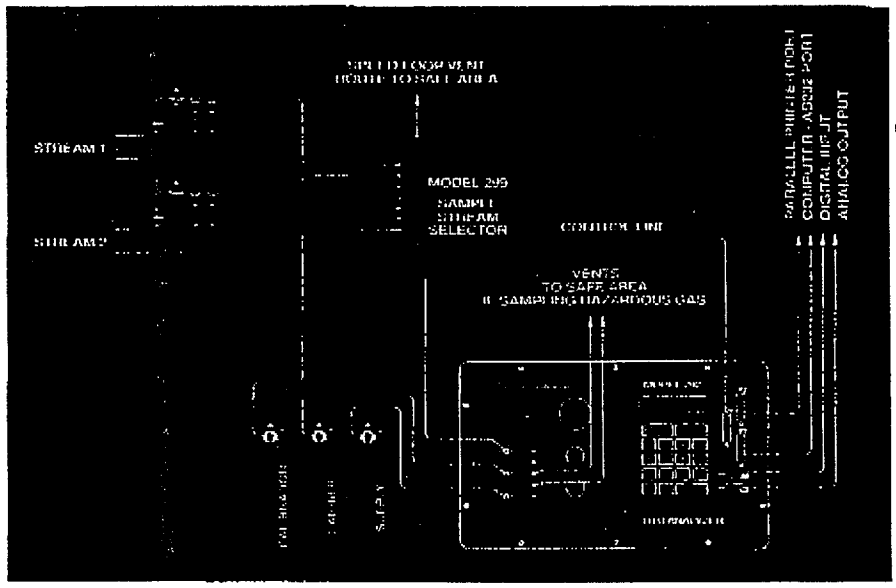

Proven Performance.

The Model 2920 System uses field-proven technologies and industry-standard gas chromatographic techniques. And it's been performance-tested in a variety of real-world applications.

With some systems, you have to wait until analyses are completed before you can communicate with the remote unit. With the Model 2920 System, you have uninterrupted access to data and controls, even during analysis. That's because the Model 2920 uses not one but two powerful, on-board computers. While one computer performs analyses, the other handles communications.

Advanced, built-in programming allows the unit to calculate heating value, relative density, and compressibility via the AGA 8 method. The system also analyzes composition with exceptional accuracy.

Oven temperature is precisely controlled to within ±0.01°C, eliminating errors caused by ambient temperature fluctuations. Analysis repeatability is better than ±0.5 BTU / 1000 BTU.

Our standard columns have an expected life span of 10 years. The proprietary manufacturing process ensures that the instrument will maintain superior test repeatability and accuracy over its entire service life.

A Thermal Conductivity Detector (TCD) gives you extremely high sensitivity to low concentrations of components.

For protection from harsh field conditions, all Model 2920 System components are encased in a rugged, weather-proof and moisture-resistant NEMA 4 package.

Value-Extra Features.

The Model 2920 System was designed and built to deliver more for your money. To meet that objective, we've included a long list of hardworking, easy-to-use extra features.

These features include *Automatic Calibration* at user-defined intervals, *Automatic Shutdown and Restart for Power Failures*, with built-in Data Protection: and eight programmable *High/Low Signal alarms*.

Best of all, the Model 2920 System can eliminate the "hidden costs" of other on-line systems — for training, multi-structure installation, programming, support, and other items that don't show up in the quoted price.

Dollar for dollar, feature for feature, no other BTU Analyzer even comes close, in performance, ease of use, or value.

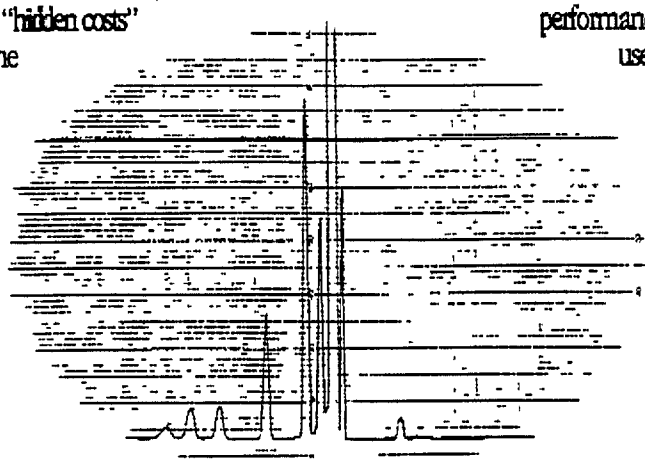

Don't Pay More For Less.

For a complete demonstration of Model 2920 System capabilities, simply give us a call.

EG&G INSTRUMENTS CHANDLER

P O Box 470710 • Tulsa, Oklahoma, U.S.A. 74147-0710
Telephone: (918) 250-7200 • FAX (918) 459-7199 • TELEX 205843

Specifications.

ENVIRONMENTAL REQUIREMENTS:

- Operating Temperature Range: -25° to 45°C (-10° to 110°F)
- Environmental Rating: Approved by Factory Mutual Research Co. for use in Class I, Division 2, Groups C & D locations.
- NEMA 4 enclosure

INTERFACE SPECIFICATIONS:

- Printer: Parallel/Centronics
- Computer: RS232C (DTE), 2400 Baud, 8 data bits, no parity, 1 stop bit

ANALOG OUTPUT SPECIFICATIONS:

- The analog output for a chart recorder is 0-10 Vdc, 1000 OHMS source impedance.

PRINTER SPECIFICATIONS:

- Printer: Epson 9-pin or equivalent with parallel (Centronics) interface

POWER REQUIREMENTS:

- Power: 110 or 220 Volts ±10%, 50/60 Hz, 250 VA max., 40 W operating

GAS REQUIREMENTS:

- Carrier Gas: Helium (Zero Grade, 99.995% pure)

  Pressure: 1035 kPa (150 psig)

  Connection: Stainless steel tubing provided with the analyzer. Flexible plastic tubing is NOT recommended.
- Supply Gas: Dry Instrument Air, Nitrogen or other inert gas (Instrument grade)

  Pressure: 520 kPa (75 psig)

  Connection: Hose provided with analyze or other clean tubing rated for the pressure.
- Sample Gas: Analyzes dry pipeline quality natural gas that contains: nitrogen, methane, carbon dioxide, ethane, propane, i-butane, n-butane, i-pentane, neo-pentane, n-pentane, C_6 and heavier components

  Maximum inlet pressure: 21 MPa (3000 psig)

  Minimum inlet pressure: approximately 3.5 kPa (0.50 psig)

  Connection: Stainless steel tubing provided with the analyzer or other tubing rated for the pressure.

EG&G Instruments Chandler / Model 292 BTU Analyzer

Test time: Mar. 10 93 18:11 — Calibration #: 3
Test #: 165 — Stream #: 1 — Location No. 930308

	Standard / Dry Analysis				Saturated / Wet Analysis		
	Mole%	BTU*	R.Den.*	GPM**	Mole%	BTU*	R.Den*
Methane	95.027	962.02	0.5264	-	93.373	945.28	0.5172
Ethane	2.420	42.92	0.0251	0.6471	2.378	42.17	0.0247
Propane	0.667	16.83	0.0102	0.1839	0.656	16.53	0.0100
i-Butane	0.160	5.21	0.0032	0.0523	0.157	5.12	0.0032
n-Butane	0.134	4.37	0.0027	0.0421	0.131	4.29	0.0026
i-Pentane	0.051	2.03	0.0013	0.0185	0.050	1.99	0.0012
n-Pentane	0.023	0.93	0.0006	0.0084	0.023	0.91	0.0006
(C_6+)	0.079	3.99	0.0025	0.0339	0.077	3.92	0.0025
Moisture	0.000	0.00	0.0000	-	1.740	0.88	0.0106
Nitrogen	0.371	0.00	0.0036	-	0.365	0.00	0.0035
(CO_2)	1.070	0.00	0.0163	-	1.051	0.00	0.0160
Total	100.00	1038.3	0.5917	0.9861	100.00	1021.1	0.5922

** Uncorrected for compressibility at 60 0F & 14.730PSIA.*
*** Liquid Volume reported at 60.0F*

		Standard / Dry Analysis	Saturated / Wet Analysis
Molar Mass	=	17.138	17.153
Relative Density	=	0.5928	0.5934
Compressibility Factor	=	0.9978	0.9977
Heating Value	=	22938. BTU/lb	22538. BTU/lb
Heating Value	=	1040.6 BTU/CF	1023.5 BTU/lb
Absolute Gas Density	=	45.3666 lbm/1000CF	45.4117 lbm/1000CF

Unnormalized Total: 100.038
Last Calibrated with Calgas of 1050.3 BTU/CF Mar. 10 93 16:31
C_6+ Last Update. Mar. 02 93 14:11
C_6+ BTU/CF 5065.8, C_6+ lbm/Gal 5.6425, and C_6+ Mol.Wt. 92.00.

▲ *Typical BTU Analysis Report*

EG&G INSTRUMENTS CHANDLER
P.O. Box 470710 • Tulsa, Oklahoma, U.S.A. 74147-0710
Telephone: (918) 250-7200 • FAX: (918) 459-7199 • TELEX 205843

ISO 9001 CERTIFIED

The Model 292 can also be configured for use at a stationary location. Ask for our brochure on the Model 2920 System for Stationary Applications.

Data Storage and Recall

The Model 292 has a storage capacity that holds data from as many as 64 analyses. The stored data are compiled into a report and filed by location number (sample site), which you enter on the keypad. When an operator enters a previously-used location number, the panel display indicates previous analyses stored under that number. This gives the operator instant access to a complete history of all data taken at that site.

The stored reports can be transferred to a printer or transferred to a computer at any time. Transferring the reports to a computer requires an accessory communication driver software package such as Procomm® and a modem in the computer.

Calibration

The Model 292 Portable BTU Analyzer is fully-calibrated when it leaves the factory. An operator can recalibrate the unit periodically to verify its superior repeatability. This is easy to accomplish using calibration gas, the keypad, and calibration software that is programmed into the unit. If no other calibration data are entered, the Model 292 will default to the original input provided at the factory. The date and heating value of the calibrated gas will be printed automatically on each analysis report. A calibration report can be re-printed at any time.

Equipment Supplied with Each Instrument

- Set of computer cables
- Two 10 ft by 1/8" OD flexible SS tubes, for carrier and sample gas.
- One 8 ft by 3/16" ID black nylon hose for supply gas.
- Operation Manual.
- Factory Calibration Specs.

Specifications

Gas Inputs

Carrier Gas: 99.995% Helium, 1034 kPa (150 psig)

Supply Gas for Switching Valve: Nitrogen, Helium, or Instrument Air, 552 kPa (80 psig)

Connectors

Parallel Printer: Epson-compatible dot matrix printer

Computer RS232C: for serial communication (DTE) - typically through a modem

Analog Output: 0-10 VDC signal for plotting Chromatogram

System Interface: Digital I/O for use only with our Model 2920 System for Stationary Applications; RS232 serial communication (DTE)

Signal Input: Reserved for future system applications

Displayed Results

Compositional Analysis (mole %)

Heating Value;

kJ/m^3 (Btu/SCF) - Standard and Saturated

kJ/kg (Btu/lb mass) - Standard and Saturated

Compressibility Factor

Relative density

Absolute gas density, kg/m^3 (lb mass/1000 SCF)

Repeatability

Within ±1.0 Btu/1000 SCF

Voltage Requirements

120 VAC ±10% 50/60 Hz,
or
220 VAC ±10% 50/60 Hz

Can be operated with an Inverter from 12 VDC (see Inverter in Accessories)

External Tube Connections

Three Inlets: 1/8" NPT (female).

Five Vents: 1/16" tube.

(See Accessories for metric adapters)

Specifications (continued)

H_2S

The unit can operate with gas streams that contain H_2S without excessive degradation. The minimum detectable limit for H_2S is 2500 ppm.

Electrical Classification

Approved by FM (Factory Mutual) for Class 1, Division 2, Groups C & D specifications

Weights and Dimensions

Net Weight: 14 kg (30 lb)

Cabinet Dimensions:
46 x 28 x 48 cm
(18 x 11 x 19 in.)

Shipping Weight: 25 kg (55 lbs)

Shipping Dimensions:
58 x 58 x 56 cm
(23 x 23 x 22 in.)

Ordering Information

Model 292-20 BTU Analyzer, 120 VAC or 220 VAC (specify voltage when ordering). Complete with all the equipment listed. Order accessories from the following list.

Accessories

Inverter to provide operating power from a truck or auto battery:
Part #300-27404,
12VDC to 120VAC.
Part #300-28656,
12VDC to 220VAC.

Transmitter
Model 298 Four-Channel 4-20 mA Current Transmitter. Permits the transfer of any 4 of 43 parameters measured during a test (such as Heating Value, %N_2, %CO_2, %CH_4, Relative Density, etc.) to an external recording or storage device.

Portable Bottle Option
Model 292-400. Includes two regulators, gauges, bracket, carrying case, and two DOT-Approved aluminum bottles with a capacity of 195 liters (6.9 cubic feet)

APPENDIX B

Audit Records

SERIAL # 11003249

BURSHTYN STEAM T+P NORMAL

SERIAL # 11003249 P=130 ATM T=575 C

SERIAL # 11003249

ENERAC MODEL 2000

SERIAL # 11003249

ENERAC MODEL 2000

COMBUSTION TEST RECORD

FOR: BURNS & ROE NO 4 165 MW

TIME: 10:53:29 LEFT FRONT

DATE: 03/06/95

FUEL POLSKY COAL

COMBUSTION EFFICIENCY:	75.1	%
AMBIENT TEMPERATURE:	22	°C
STACK TEMPERATURE:	42	°C
OXYGEN:	05.3	%
CARBON MONOXIDE:	7	MGM
CARBON DIOXIDE:	14.0	%
COMBUSTIBLE GASES:	OVER	%
STACK DRAFT (INCHES H20):	- 6.2	
EXCESS AIR:	33	%
OXIDES of NITROGEN:	216	MGM
SULFUR DIOXIDE:	OVER	MGM
CARBON MONOXIDE ALARM:	1990	PPM

MODE:MGM OXY_REF=TRUE%

SERIAL # 11003249

SERIAL # 11003249

ENERAC MODEL 2000

COMBUSTION TEST RECORD

FOR: BURNS & ROE

TIME: 10:58:03

DATE: 03/06/95

FUEL POLSKY COAL

COMBUSTION EFFICIENCY:	88.4	%
AMBIENT TEMPERATURE:	22	°C
STACK TEMPERATURE:	29	°C
OXYGEN:	05.7	%
CARBON MONOXIDE:	14	MGM
CARBON DIOXIDE:	13.6	%
COMBUSTIBLE GASES:	OVER	%
STACK DRAFT (INCHES H20):	- 8.6	
EXCESS AIR:	36	%
OXIDES of NITROGEN:	363	MGM
SULFUR DIOXIDE:	OVER	MGM
CARBON MONOXIDE ALARM:	1990	PPM

MODE:MGM OXY_REF=TRUE%

SERIAL # 11003249

ENERAC MODEL 2000

COMBUSTION TEST RECORD

FOR: BURNS & ROE No. 4

TIME: 10:59:19 LEFT REAR

DATE: 03/06/95

FUEL POLSKY COAL

COMBUSTION EFFICIENCY:	81.7	%
AMBIENT TEMPERATURE:	22	°C
STACK TEMPERATURE:	33	°C
OXYGEN:	06.9	%
CARBON MONOXIDE:	7	MGM
CARBON DIOXIDE:	12.6	%
COMBUSTIBLE GASES:	OVER	%
STACK DRAFT (INCHES H20):	- 3.5	
EXCESS AIR:	47	%
OXIDES of NITROGEN:	406	MGM
SULFUR DIOXIDE:	OVER	MGM
CARBON MONOXIDE ALARM:	1990	PPM

MODE:MGM OXY_REF=TRUE%

SERIAL # 11003249

SERIAL # 11003249

ENERAC MODEL 2000

COMBUSTION TEST RECORD

FOR: BURNS & ROE

TIME: 11:04:09 No. 4

DATE: 03/06/95 RIGHT REAR

FUEL POLSKY COAL

COMBUSTION EFFICIENCY:	72.2	%
AMBIENT TEMPERATURE:	22	°C
STACK TEMPERATURE:	36	°C
OXYGEN:	05.4	%
CARBON MONOXIDE:	138	MGM
CARBON DIOXIDE:	13.9	%
COMBUSTIBLE GASES:	OVER	%
STACK DRAFT (INCHES H20):	- 7.0	
EXCESS AIR:	34	%
OXIDES of NITROGEN:	373	MGM
SULFUR DIOXIDE:	OVER	MGM
CARBON MONOXIDE ALARM:	1990	PPM

MODE:MGM OXY_REF=TRUE%

65

SERIAL # 11003249
SERIAL # 11003249

ENERAC MODEL 2000
COMBUSTION TEST RECORD

FOR: BURNS & ROE

No. 4

TIME: 11:08:05
DATE: 03/06/95

RIGHT FRONT

FUEL POLSKY COAL

COMBUSTION EFFICIENCY:	79.7	%
AMBIENT TEMPERATURE:	22	°C
STACK TEMPERATURE:	36	°C
OXYGEN:	05.9	%
CARBON MONOXIDE:	11	MGM
CARBON DIOXIDE:	13.5	%
COMBUSTIBLE GASES:	OVER	%
STACK DRAFT (INCHES H2O):	- 6.0	
EXCESS AIR:	38	%
OXIDES of NITROGEN:	356	MGM
SULFUR DIOXIDE:	3359	MGM
CARBON MONOXIDE ALARM:	1990	PPM

MODE:MGM OXY_REF=TRUE%

SERIAL # 11003249
SERIAL # 11003249

ENERAC MODEL 2000
COMBUSTION TEST RECORD

FOR: BURNS & ROE

TIME: 11:17:20
DATE: 03/06/95

FUEL POLSKY COAL

COMBUSTION EFFICIENCY:	OVER	%
AMBIENT TEMPERATURE:	23	°C
STACK TEMPERATURE:	46	°C
OXYGEN:	08.5	%
CARBON MONOXIDE:	0	MGM
CARBON DIOXIDE:	11.1	%
COMBUSTIBLE GASES:	1.62	%
STACK DRAFT (INCHES H2O):	- 4.4	
EXCESS AIR:	66	%
OXIDES of NITROGEN:	141	MGM
SULFUR DIOXIDE:	1334	MGM
CARBON MONOXIDE ALARM:	1990	PPM

MODE:MGM OXY_REF=TRUE%

O_2 READINGS SAME BURSHTYN

SERIAL # 11003249 535C (575 DESIGN)

ENERAC MODEL 2000

COMBUSTION TEST RECORD

FOR: BURNS & ROE 115 ATM (130 DESIGN)

No. 5 95 MW

TIME: 11:20:45

DATE: 03/06/95

LEFT FRONT

FUEL RUS GAS 60%
MAZUT 40%

COMBUSTION EFFICIENCY:	OVER	%
AMBIENT TEMPERATURE:	23	°C
STACK TEMPERATURE:	47	°C
OXYGEN:	09.1	% ←
CARBON MONOXIDE:	0	MGM
CARBON DIOXIDE:	06.7	%
COMBUSTIBLE GASES:	1.75	%
STACK DRAFT (INCHES H20):	- 4.7	
EXCESS AIR:	69	%
OXIDES of NITROGEN:	152	MGM
SULFUR DIOXIDE:	1389	MGM
CARBON MONOXIDE ALARM:	1990	PPM

MODE:MGM OXY_REF=TRUE%

SERIAL # 11003249

SERIAL # 11003249

ENERAC MODEL 2000

COMBUSTION TEST RECORD

FOR: BURNS & ROE

TIME: 11:25:18 No. 5 95 MW

DATE: 03/06/95 LEFT REAR

FUEL RUS GAS 60%
MAZUT 40%

COMBUSTION EFFICIENCY:	OVER	%
AMBIENT TEMPERATURE:	23	°C
STACK TEMPERATURE:	37	°C
OXYGEN:	06.9	% ←
CARBON MONOXIDE:	0	MGM
CARBON DIOXIDE:	07.9	%
COMBUSTIBLE GASES:	1.19	%
STACK DRAFT (INCHES H20):	- 6.7	
EXCESS AIR:	44	%
OXIDES of NITROGEN:	207	MGM
SULFUR DIOXIDE:	1026	MGM
CARBON MONOXIDE ALARM:	1990	PPM

MODE:MGM OXY_REF=TRUE%

SERIAL # 11003249
SERIAL # 11003249

ENERAC MODEL 2000
COMBUSTION TEST RECORD

FOR: BURNS & ROE

TIME: 11:28:59 No. 5 95 MW
DATE: 03/06/95 RIGHT REAR

FUEL RUS GAS 60%
NATGAS 40%

COMBUSTION EFFICIENCY:	OVER	%
AMBIENT TEMPERATURE:	23	°C
STACK TEMPERATURE:	41	°C
OXYGEN:	08.1	% ←
CARBON MONOXIDE:	0	MGM
CARBON DIOXIDE:	07.2	%
COMBUSTIBLE GASES:	1.36	%
STACK DRAFT (INCHES H20):	- 23.7	
EXCESS AIR:	57	%
OXIDES of NITROGEN:	172	MGM
SULFUR DIOXIDE:	955	MGM
CARBON MONOXIDE ALARM:	1990	PPM

MODE:MGM OXY_REF=TRUE%

SERIAL # 11003249
SERIAL # 11003249

ENERAC MODEL 2000
COMBUSTION TEST RECORD

FOR: BURNS & ROE

TIME: 11:31:57 No. 5 95 MW
DATE: 03/06/95 RIGHT FRONT

FUEL RUS GAS 60%
NATGAS 40%

COMBUSTION EFFICIENCY:	OVER	%
AMBIENT TEMPERATURE:	23	°C
STACK TEMPERATURE:	37	°C
OXYGEN:	10.8	% ←
CARBON MONOXIDE:	0	MGM
CARBON DIOXIDE:	05.7	%
COMBUSTIBLE GASES:	1.17	%
STACK DRAFT (INCHES H20).	- 40.2	
EXCESS AIR:	95	%
OXIDES of NITROGEN:	125	MGM
SULFUR DIOXIDE:	829	MGM
CARBON MONOXIDE ALARM:	1990	PPM

MODE:MGM OXY_REF=TRUE%

EUGENE ZADOROJNY

Burshtyn 6 March 1995 Boiler Tests	Polsky Coal - 95% Rus Nat Gas - 5% No 4 Boiler		Design: 200 MW, 130 ATM, 575C Actual 165 MW				Rus. Gas - 60% Mazut - 40% No 5 Boiler		Design: 200 MW, 130 ATM, 575C Actual: 95 MW, 115 ATM, 535C	
	L Front	L. Rear	ID Fan	I.D. Fan	R. Rear	R. Front	L. Front	L. Rear	R. Rear	R. Front
Efficiency %	--	--	70.2	74.8	--	--	--	--	--	--
Stack Temp °C	42	33	122	130	36	36	47	37	41	37
Oxygen % O_2	5 3	6.9	12 8	11.3	5.4	5.9	9 1	6.9	8.1	10.8
Carbon Monoxide CO	7 MGM	7	11	14	138	11	0	0	0	0
Carbon Dioxide CO_2	14 0	12 6	7.3	8.7	13.9	17.5	6 7	7.9	7.2	5.7
Combustible Gas %	>	>	2.38	2.39	>	>	1.75	1.19	1 36	1.17
Stack Draft mm	-157	-216	-1334	-1316	-178	-154	-119	-175	-602	-1036
Excess Air %	33	47	151	115	34	38	69	44	57	95
NO_x Mg/Nm^3	216	406	227	222	373	356	152	207	172	125
SO_2 Mg/Nm^3	>	>	1605	1792	>	3359	1389	1026	955	829

Note: Existing oxygen analyzers O_2 readings were similar to Enerac values

APPENDIX C

Power Plant Data

BEST AVAILABLE COPY

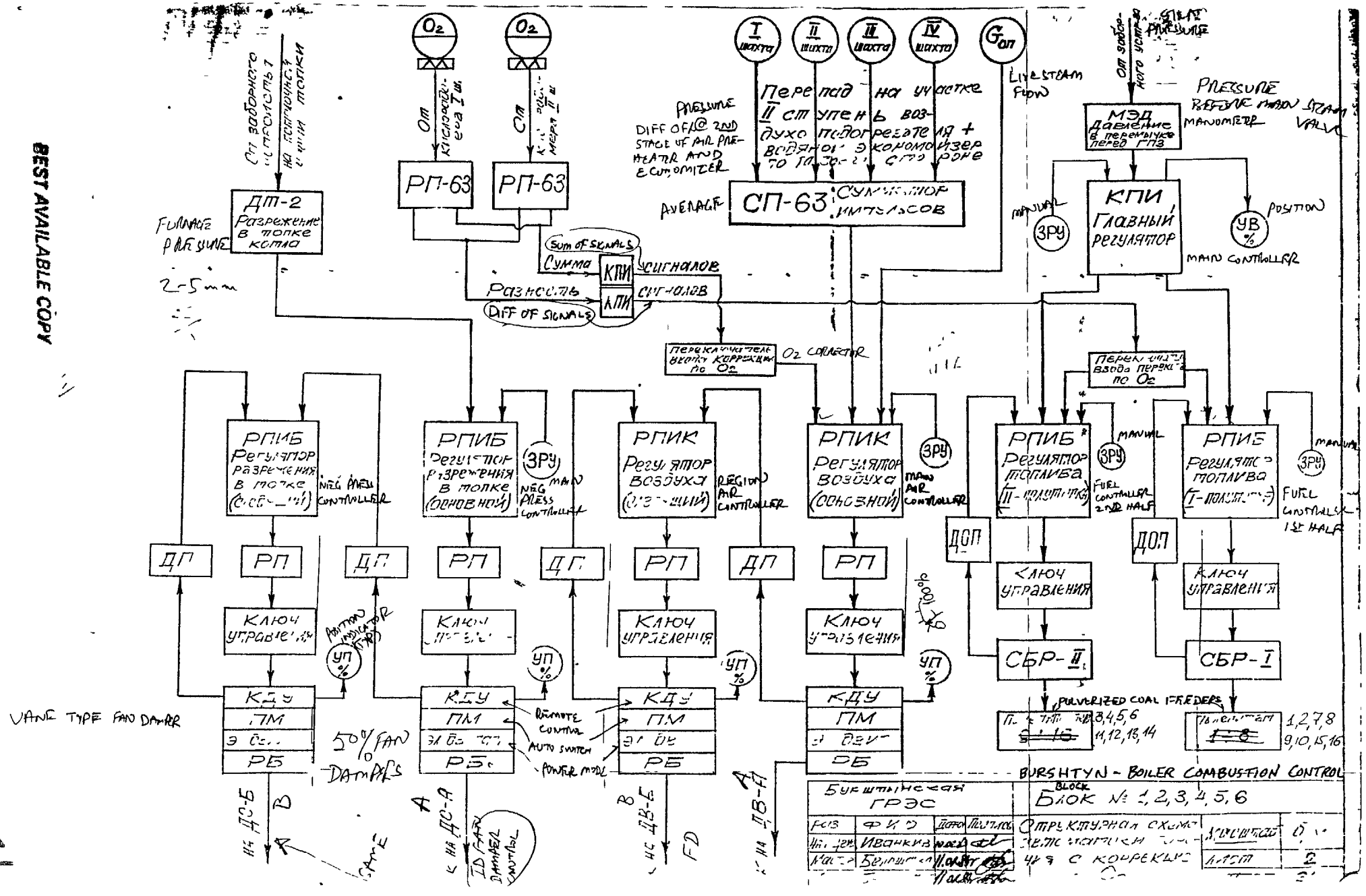

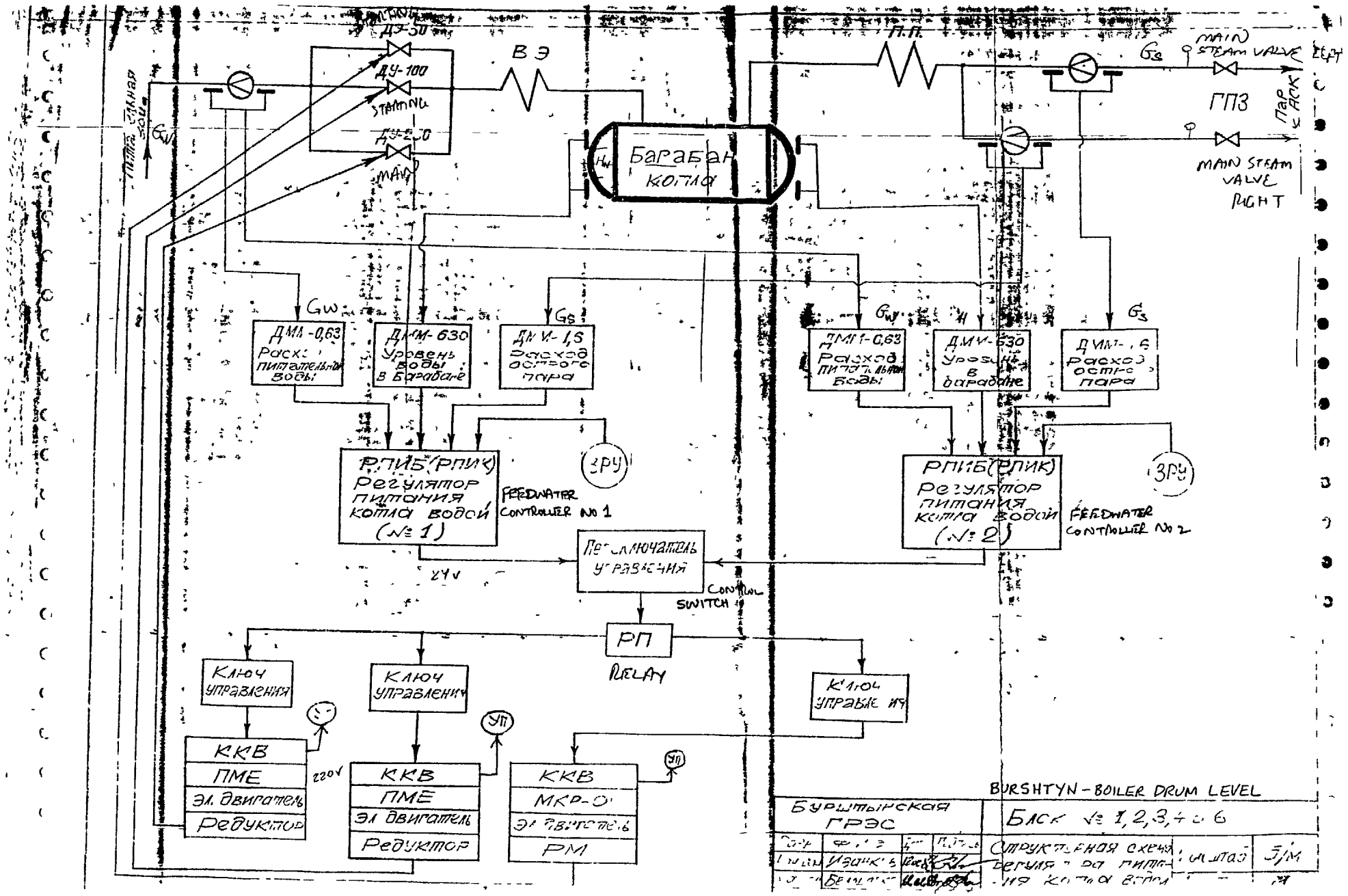

BEST AVAILABLE COPY

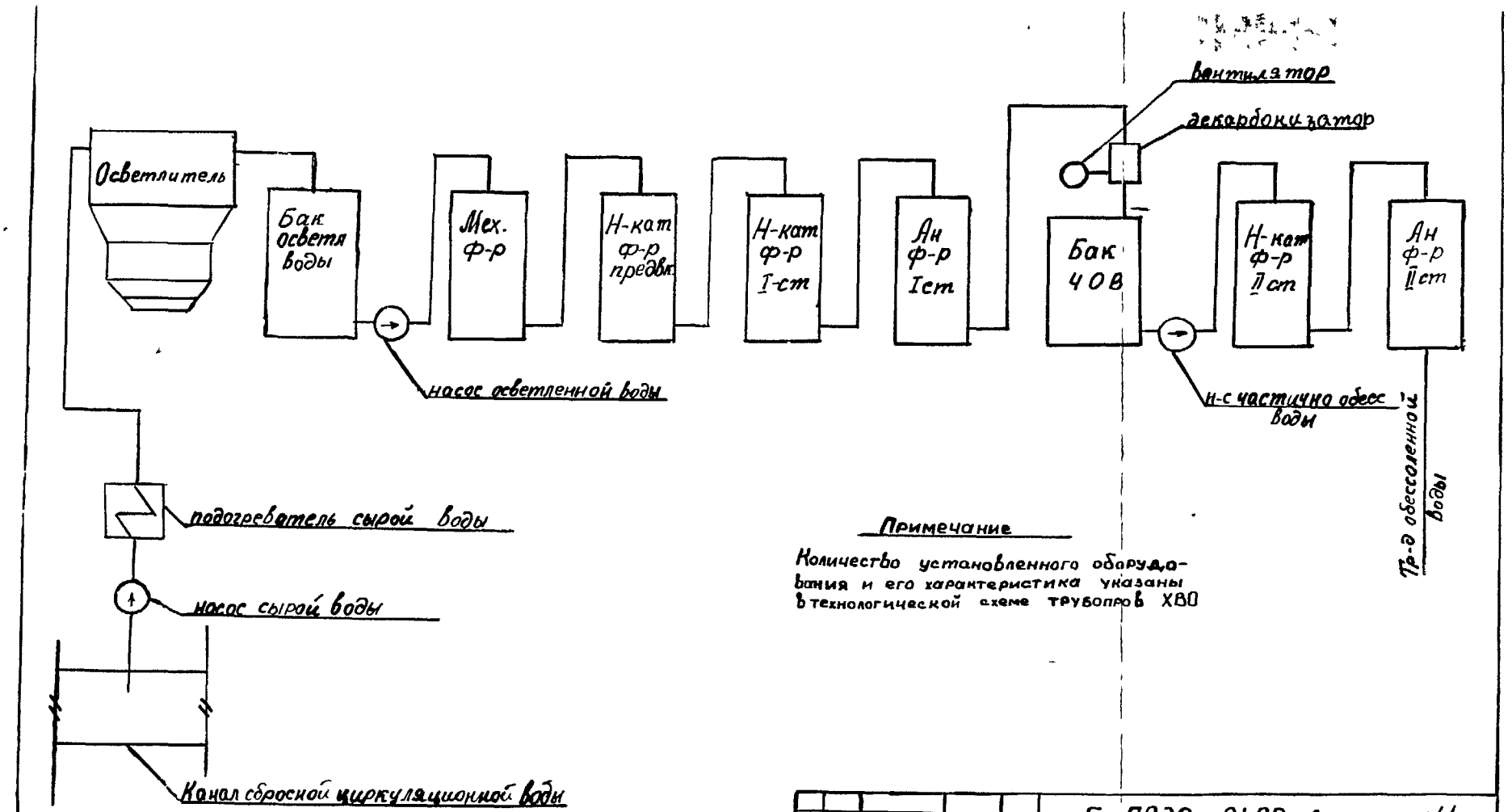

Примечание

Количество установленного оборудования и его характеристика указаны в технологической схеме трубопров ХВО

Изм.	Лист	N докум.	Подпись	Дата	Бу ГРЭС - 2400 мвт	N1
Разраб.		Шварав			ХВО производительность 250 т/час	
Нач. цеха		Фадк				
Нач. ПТО		--				
Гл. инжен.					Принципиальная схема обессоливающей установки	Бу ГРЭС ПЭО „Львовэнерго"

BEST AVAILABLE COPY

BURSHTYN
COAL QUALITY

The quality of the coal shipped to the power station was determined by analyses of samples taken manually from the railway cars. Quality of the coal fed to the furnace was determined by analyses of samples taken automatically before the conveyor belts of the bunker gallery.

Average annual ash moisture and heat values of the burned coal were as follows:

1993	42.1%	9.9%	3294 kcal/kg
1994	39.7%	8.7%	3679 kcal/kg

The heat value of coal in 1994 comparing to that in 1993 increased due to lessening of coal slime, the Promproduct coal, and Donbass high-ash coal supply. At the same time, shipment of higher heat value coal from Western Donbass region increased. In 1994 the quality of 22% of the coal received by the power plant during the year was checked. Actual ash content in the coal turned out to be 2.4% higher than that put in the attached quality certificates. At some deliveries the disparity reached 19-20%.

In the 4th quarter the mine "Zakhidnodonbasska" drastically worsened the quality of its coal. The disparity concerning ash content raised to 6-8%. During the year 1994, 66 claims were made for inadequate coal quality. The total price of the claims was 2565.7 mln. krb. (for 34591 tons of coal). 59 claims with the total price of 2037.9 mln. krb. (for 34469 tons of coal) were met. 22 claims which total price is 541.8 mln. krb. (for 10275 tons of coal) are under consideration.

During the last year 147 claims were made for failure in performing of obligations for coal supply. The total price of the claims was 756.4 mln. krb. (for 4402 tons of coal). 85 of these claims with the total price of 360.4 mln. krb. for 3083 tons of coal were satisfied. 8 claims with the total price of 38.3 mln. krb. (for 226 tons of coal) were declined. 54 claims with the total price of 357.7 mln. krb. (for 1093 tons of coal) are under consideration.

During the last year 63 claims with the total price of 2854.2 mln. krb. were made for late fuel delivery. 50 of these claims with the total price of 1365 mln. krb. were considered and satisfied. The mentioned amount of money was not transferred to the account of Burshtyn Power Plant due to shortage of funds at the account of the Directorate of L'viv Railroads. (The payment orders are in the card index file.) During the last year 349.3 mln. krb. was received for the claims carried-over from 1993 for late fuel delivery. 13 claims with the total amount of 1489.2 mln. krb. are under consideration.

BURSHTYN

Polsky Mixed			%
C	=	0.584	58.4
H_2	=	0.020	2.0
N_2	=	0.015	1.5
O_2	=	0.015	1.5
S	=	0.018	1.8
W	=	0.091	9.1
Ash	=	0.257	25.7
		1.000	100.0

Kcal/Kg x Kg/2.2046 Lb x 3.9685 BTU/Kcal = 1.8

1.8 x Kcal/Kg = BTU/LB

W_a = $11.5C + 34.5 (H_2 + O_2/8) + 4.3 S$

= $11.5 (0.584) + 34.5 (0.02 + 0.015/8) + 4.3 (0.018)$

W_a = 7.55 LBS AIR/LB FUEL

W_{H2O} = $9H + W + 0.014 W_a$

= $9 (0.02) + 0.091 + 0.014 (7.55)$

W_{H2O} = 0.377 LBS WATER/LB FUEL FORMED FROM COMBUSTION

HHV = LHV + 1040 x H_20 BTU/LB

= (1.8 x 4974 Kcal/Kg) BTU/LB + 1040 (0.377)

HHV = 9345 BTU/LB

BURSHTYN

Polsky Coal Pure

Proximate	Primary	Alternate Mine
Fixed Carbon	29.9	(31.0)
Volatiles	38.0	(34.0)
Ash	23.0	(27.0)
Water	9.6 - 12	(8.0)
		(0.6 - 0.8 S)

Combustibles			As Received			1-(W+A)/100 = 0.679
C	=	82.0	C	=	55.670	
H	=	5.0	H	=	3.395	
N	=	1.5	N	=	1.019	
O	=	10.3	O	=	6.994	
S	=	1.2	S	=	0.815	
			W	=	9.1	
		100	Ash	=	23.0	
					99.993	

Ash Fusion C

t_1 = 960
t_2 = 1266
t_3 = 1400

Burshtyn Taganrog TP-100 Boilers Rated 1270°C
Problem with slagging on superheaters derated
to 170 MW and increase excess air (LAMBDA)

Russian Natural Gas

H_2	=	1.1	C	=	0.721	Kcal/Kg x Kg/2.2046 Lb x 3.9685 BTU/Kcal = 1.8
CH_4	=	95.0	H	=	0.24	
C_2H_6	=	0.5	O	=	0.01	1.8 x Kcal/Kg = BTU/LB
C_3H_8	=	0.5	N_2	=	0.026	
N_2	=	1.5			0.997	LHV = 7840 to 8000 Kcal/Kg
O_2	=	0.5				
		99.1				

$$MW = 2\,H_2 + 16\,CH_4 + 30\,C_2H_6 + 44\,C_3H_8 + 28\,N_2 + 32\,O_2$$

$$= (2 \times 0.011) + (16 \times 0.95) + (30 \times 0.005) + (44 \times 0.005) + (28 \times 0.015) + (44 \times 0.005)$$

$$MW = 16.232$$

Conversion of Volumertric to Weight Analysis

$$C = (12\,CH_4 + 24\,C_2H_6 + 36\,C_3H_8) / MW$$

$$C = ((12 \times 0.95) + (24 \times 0.005) + (36 \times 0.005)) / 16.232 = 0.721$$

$$H = (2\,H_2 + 4\,CH_4 + 6\,C_2H_6 + 8\,C_3H_8) / MW$$

$$H = ((2 \times 0.011) + (4 \times 0.95) + (6 \times 0.005) + 8 \times 0.005)) / 16.232 = 0.24$$

$$O = 32\,O_2/MW = 32 \times 0.005 / 16.232 = 0.01$$

$$N_2 = 28\,N_2/MW = 28 \times 0.015 / 16.232 = 0.026$$

$$W_a = 11.5C + 34.5\,(H - O/8) + 4.3\,S$$

$$= (11.5 \times 0.721) + 34.5\,(0.24 - 0.01/8) + (4.3 \times 0)$$

$$W_a = 16.528 \text{ LBS AIR/LB FUEL}$$

$$W_{H2O} = 9H + W + 0.014\,(1 + X)\,W_a,\ (1 + X = 1) \text{ Excess Air, Stochiometric}$$

$$= (9 \times 0.24) + 0 + (0.014 \times 16.528)$$

$$W_{H2O} = 2.39 \text{ LBS WATER/1 LB FUEL FORMED FROM COMBUSTION}$$

$$HHV = LHV + 1040 \times W_{H2O}$$

$$= (1.8 \times 7840) + (1040 \times 2.39)$$

$$HHV = 16{,}598 \text{ BTU/LB LOW VALUE}$$
$$= 16{,}886 \text{ BTU/LB SPECIFICATION}$$

Russian Natural Gas

H_2	=	1.1
CH_4	=	95.0
C_2H_6	=	0.5
C_3H_8	=	0.5
N_2	=	1.5
O_2	=	0.5
		99.1

Ft^3 Dry Flue Gas/ Ft^3 Gas = $(0.0189\ H_2) + (0.0856\ CH_4) + (0.1524\ C_2H_6)$

$+ (0.2190\ C_3H_8) + (0.01\ N_2) + (0.0378\ O_2)$

= 8.335

$Ft^3\ CO_2$/ Ft^3 Gas = $(0.01\ CH_4) + (0.02\ C_2H_6) + (0.03\ C_3H_8) + (0.01\ O_2)$

= 0.986

CO_2% = 100 x $Ft^3\ CO_2/Ft^3$ Flue Gas = 0.986/8.335

CO_2 = 11.83% Ultimate for Perfect Combustion

Mazut		Dry	Wet
C	=	84.7	80.47
H_2	=	10.7	10.17
N_2	=	0.9	0.86
O_2	=	0.7	0.67
S	=	3.5	3.33
W	=	0.0	5.0
Ash	=	0.14	0.13
		100.64	100.63

W_a = 11.5C + 34.5 (H - O/8) + 4.3 S

= 11.5 (0.8047) + 34.5 (0.1017 - 0.0067/8) + 4.3 (0.0333)

W_a = 12.88 LBS AIR/LB FUEL

W_{H2O} = 9H + W + 0.014 (1 + X) W_a, (1 + X = 1.0) Excess Air Stochiometric

= 9 (0.1017) + 0.05 + 0.014 (1.0) 12.88

W_{H2O} = 1.15 LBS WATER/1 LB FUEL FORMED FROM COMBUSTION

HHV = LHV + 1040 x W_{H2O}

= (1.8 x 9568 Kcal/Kg) BTU/LB + (1040 x 1.0)

= 18,414 BTU/LB

Mazut

C	=	80.47
H_2	=	10.17
N_2	=	0.86
O_2	=	0.67
S	=	3.33
W	=	5.0
Ash	=	0.13
		100.63

Ft^3 Flue Gas/ Lb Fuel $= 1.505C + 3.57\ H_2 + 0.557\ S + 0.135\ N_2 - 0.448\ 0_2$

$= 1.505\ (80.47) + 3.57\ (10.17) + 0.557\ (3.33) + 0.135\ (0.86) - 0.448\ (0.67)$

$= 158.68\ Ft^3$ Flue Gas/Lb Fuel

$Ft^3\ CO_2$/ Lb Fuel $= 0.315C = 0.315\ (80.47) = 25.348$

$CO_2\%$ $= 100 \times Ft^3\ CO_2/Ft^3$ Flue Gas $= 25.348/158.68$

CO_2 = 15.97% Ultimate for Perfect Combustion

BURSTHYN

1994	Jan	Feb	Mar	Apr	May	Jun	Jul	Aug	Sept	Oct	Nov	Dec	Total
Fuel Consumption													
Coal 1000 ton	238.7	265.9	270.2	236.6	146 6	1261 2	267.1	263.3	254.6	326 3	324.7	328.0	3083.3
Gas MLN M^3	52.0	37.0	33.0	45.7	54.0	52.1	65 0	71.0	67 5	63 0	62.5	75.0	677.8
Mazut 1000 ton	17 0	18.4	21.0	10 6	6 1	4.7	8 4	6 3	6.9	13 8	22.3	28.2	163 9
Power Generation 1000 KW/H	603793	572957	584126	527426	423273	438597	654426	665594	655410	786921	802779	910778	7626080
Hot Water (Release) G Cal	18702	28244	21849	15044	6047	2690	1886	3284	3310	10504	23667	24130	159357
Steam (Release) G.Cal	--	2998	1727	2042	1502	1270	950	810	900	1752	1926	2500	18376
Service Water Consumption 1000 M^3	2098 9 64 8 108 0	1998 60.7 90.0	2028 6 66 9 108	1924 68 108	1623 66.9 81.8	1719 76.4 108	2114.1 66 9 117 4	2209 6 70 6 117 9	2201 73 5 109 8	2596 73.5 109 8	2868 68.3 108	2916 5 64.8 108 0	26301 826 9 1271 9
Waste Water	120.5 M^3/H of waste water used for ash removal												

Coal = KRB 3,200,000 - 4,000,000/T =$25 - 31 75/MT
Mazut = KRB 13,500,000/T = $107/MT
Official 3/95 = KRB/$ = 125,000

BURSHTYN
NATURAL GAS PRICING

	Consumption		Power Plant	Gasprom			KRB/ 1000 Nm^3	$/ 1000 Nm^3	$/ 10^6 BTU	$ Lost
1994	Tonnes	10^6 Nm^3	Kcal/Kg	BTU/Ft^3	Kcal/Kg	DIF				
January	37,489	52	8,097	658	8,120	-23	422,399	11.42	0 49	1,677
February	26,675	37	8,070	664	8,200	-130	477,758	10.43	0 44	6,055
March	23,791	33	8,805	659	8,130	-45	634,600	13 79	0 59	2,507
April	33,164	46	8,093	658	8,120	-27	642,057	13.96	0 60	2,132
May	38,931	54	8,080	654	8,080	0	638,892	13 77	0 60	0
June	37,489	52	8,078	656	8,100	-22	640,473	13.63	0 59	1,931
July	46,862	65	8,090	660	8,150	-60	762,245	17 21	0 74	8,257
August	51,187	71	8,130	663	8,180	-50	646,799	13 94	0 60	6,094
September	48,303	67	8,137	660	8,150	-13	862,300	14 71	0 63	1,571
October	45,420	63	8,113	662	8,170	-57	838,987	10 42	0 45	4,137
November	45,420	63	8,000	654	8,074	-74	3,358,032	27 41	1 19	15,873
December	18,024	25	8,010	650	8,020	-10	4,913,882	37 60	1 64	1,173
Annual	452,755	628	-	657 5	8,124	-42	-	15 84	0 68	$51,407

Total $9,947,240

Coal = 3,200,000 IKRB) - 4,000,000 = $25 - 31 75/$m^T$

Mazut = 13,500,000 = $107/$m^T$

Official 3/95 126,000 KRB/$

X Kg x Delata Kcal/Kg x 3 9685 BTU/Kcal x $/$10^6$ BTu = $Lost

$/1000 Nm^3 x Nm^3/35 31 ft^3 x ft^3/X BTU x 10^6/1 = $/$10^6$ BTU = 28 32 x $/1000 Nm^3 X BTU/ft^3

UKRAINE 1994

AVERAGE MONTHLY EXCHANGE RATES $/KRV

January	37,000
February	45,800
March	46,000
April	46,000
May	46,400
June	47,000
July	44,300
August	46,400
September	58,600
October	80,500
November	122,500
December	130,700

Foreign exchange rate KRV UA to USD, DM, SUR for '93, '94, '95

date	Street Market buy	Street Market sell	UICE Auction Rate	NBU Official Rate
20/01/93				650 79
				398.16
				-
06/02/93		1103		937.57
				576 15
				-
05/03/93		1701		1233 11
				746 52
				-
14/04/93				3002 02
				1886 07
				-
11/10/93				15720
				-
				-
14/11/93				25000
				-
				-
05/02/94	45800	46000		
	26500	27200		
	24	24 5		
09/05/94	46000	47000		12610
	26400	27100		7660
	24 2	25		6 8
16/05/94	45500	46500		13100
				-
				8 5
23/05/94	47600	48800		
	28000	-		
	23 8	24 5		
30/05/94	53000	55000	37950	14100
	31000	-	24100	8550
	25 6	27	22 2	7 4

date	Street Market buy	Street Market sell	UICE Auction Rate	NBU Official Rate
06/06/94	48000	49000	39970	15100
	28400	29300	24200	9190
	24	24 5	20 92	7 9
13/06/94	47000	48000	39970	16500
	28000	28800	24100	10040
	24	24 5	20 92	8 6
20/06/94	46000	47000	39970	17500
	27500	28500	24100	10650
	22 5	23 5	20 32	8 9
04/07/94	43000	44500	39970	19500
	27000	27500	24850	12220
	21	23 5	20	9 8
11/07/94	44000	45000	39970	19500
	26500	27500	24850	12220
	20.5	22	19 5	9.8
18/07/94	45250	46400	39970	19500
	28250	29000	25600	12720
	21.4	22.25	19.5	9.6
25/07/94	44750	45700	39970	19500
	28000	29500	25000	14490
	21	22	19 5	9 6
01/08/94	44000	45000	39970	19500
	27500	28300	25600	12400
	20 1	20 7	19.5	9 5
08/08/94	43500	44500	39970	19500
	27500	28300	25600	12900
	19 65	20 4	19 5	9 4
15/08/94	44850	45900	39970	20500
	28000	29000	25600	12940
	20	20 5	19 5	9 7
22/08/94	47000	48000	40500	20500
	29400	30100	25300	13230
	19 7	20 3	19 8	9 6

Foreign exchange rate KRV UA to USD, DM, SUR for '93, '94, '95

date	Street Market buy	Street Market sell	UICE Auction Rate	NBU Official Rate
29/08/94	52500	53800	40400	20500
	33200	34000	25600	13240
	22 7	23 5	-	9.5
05/09/94	49000	50200	41600	22000
	31500	34000	25600	13700
	22	22 5	21	9 5
12/09/94	53200	54200	43500	24000
	33000	34000	26800	15470
	22 5	23 5	20 32	8 9
19/09/94	61500	62800	47200	29000
	39000	40000	25800	16820
	24 5	25 2	25 8	11.3
26/09/94	71000	72500	47200	28000
	45500	46500	25800	18100
	27 5	28 2	25 8	11.4
03/10/94	65000	66500	54000	30000
	42000	43000	35000	19370
	22 5	23.2	-	11.4
10/10/94	86000	90000	65000	35000
	55000	57000	-	22660
	27 5	29	-	12.4
24/10/94	93000	95000	75100	43000
	60500	62000	50400	28640
	28	29	28	14.3
31/10/94	78000	80500	78600	78600
	52000	53900	52600	52600
	27	33	28	28
07/11/94	100000	105000	79800	78600
	61500	64500	58100	52600
	30	31.5	-	28
14/11/94	130000	136000	85100	85100
	80200	84200	58100	58100
	38 1	40	26 5	26

date	Street Market buy	Street Market sell	UICE Auction Rate	NBU Official Rate
21/11/94	135000	141500	85100	91200
	90000	91800	58100	60500
	38 2	42 5	26	26 5
29/11/94	125000	129000	104200	104200
	80000	86000	65000	65000
	38	40	30 2	30 2
05/12/94	129500	135000	110200	110200
	82000	86000	71000	71000
	38 5	40	34	34
12/12/94	129000	133000	110000	110000
	80000	83000	71000	71000
	36 8	38	33.5	33.5
19/12/94	130500	135000	109800	110000
	82000	85500	70900	71000
	36 5	40	34	33 5
26/12/94	131000	135000	107900	107900
	81000	85000	70100	68620
	36	38	27	31.2
30/12/94	133500	137000	104200	104200
	81000	84000	63000	66130
	35	38	26	29 4
06/01/95	147500	157500	104000	104000
	86000	94500	62500	66870
	36	38	28 8	29.3
23/01/95	143000	154000	110200	106400
	88000	91000	69200	69250
	33 5	36	27 8	27 6

APPENDIX D

List of Contacts Made During Plant Audits

PERSONS MET DURING MEETINGS AT
THE BURSHTYN POWER PLANT

	IGOR I. BOZENENKOV	-	DIRECTOR
1.	Vladimir Zdanovsky	-	Chief Engineer
2.	Gennadiy Kunovsky	-	Deputy Director
3.	Orest Daniluk	-	Deputy Director
4.	Nikolay Kobzev	-	Deputy Chief Engineer
5.	Ivan Berkosha	-	Chief of Technical Department
6.	Tanasiy Semotyuk	-	Chief of Maintenance Department
7.	Ivan Jatsikovich	-	Deputy Chief of Technical Department
8.	Antonina Styranivskaya	-	Engineer of Maintenance Department
9.	Michail Zdanovsky	-	Deputy Chief of Maintenance Department
10.	Igor Bilas	-	Engineer of Maintenance Department
11.	Victor Matievsky	-	Chief of Boiler Automation Department
12.	Vasiliy Kriviy	-	Chief of Electric Works
13.	Alexander Ivasenko	-	Deputy Chief of Electric Works
14.	Nina Krijanovskaya	-	Electro Laboratory Engineer
15.	Uriy Trishyuk	-	Chief of Computer Department
16.	Lubomir Genega	-	Engineer of Computer Department
17.	Yaroslav Pyreeg	-	Programming Engineer
18.	Anna Prusak	-	Data Collection Engineer
19.	Roza Poloshyuk	-	Water Treatment Engineer

APPENDIX E

Abbreviations and Unit Conversions

ABBREVIATIONS AND UNIT CONVERSIONS

AC	=	alternating current
amps	=	amperes
atm	=	atmosphere = 14.696 pounds per square inch
bar	=	100,000 pascals = 14.504 pounds per square inch
BTU	=	British thermal unit
cfm	=	cubic feet per minute
cm	=	centimeter = 0.3937 inches
cm^2	=	square centimeter = 0.155 square inches
CO	=	carbon monoxide
CO_2	=	carbon dioxide
DC	=	direct current
°C	=	degree CelsiusT[°C] = (5/9)*(T[°F] -32)
°F	=	degree Fahrenheit
°R	=	degrees RankineT[°R] = T[°F] + 460
ECO	=	Energy Conservation Opportunity
eff	=	efficiency
ex air	=	excess air
ft^2	=	square feet
ft^3	=	cubic feet
Gcal	=	gigacalorie = 1 billion calories = 3.968 million BTU
GJ	=	gigajoules = 1 billion joules
gph	=	U.S. gallons per hour
gpm	=	U.S. gallons per minute
GWh	=	gigawatt hours = 1 billion watt hours
H_2	=	hydrogen
H_2O	=	water
H_2SO_4	=	sulfuric acid
hectare	=	10,000 square meters = 2.471 acres
hectoliter	=	100 liters = 26.42 U.S. gallons
Hg	=	mercury
hr	=	hour
Hz	=	hertz = cycles per second
J	=	joules
kcal	=	kilocalories = 1 thousand calories = 3.968 BTU
kg	=	kilogram = 2.2046 pounds
Kgcc	=	7,000 kcal = 27,776 BTU
kJ	=	Kilojoules = 1 thousand joules = 0.947813 BTU
km	=	kilometer = 0.621 miles
kN	=	kilonewton = 1 thousand newtons
kp	=	kopec = 1/100 ruble
kPa	=	kilo pascals = 1 thousand pascals = 0.14504 pounds per square inch
kV	=	kilovolts = 1 thousand volts
kVA	=	kilovolt-amperes
kVAr	=	kilovars = 1 thousand volt-amperes (reactive)
kW	=	kilowatt = 1 thousand watts
kWh	=	kilowatt hour = 1 thousand watt hours

lbs	=	pounds
liter	=	0.2642 U.S. gallons = 0.03531 cubic feet
m	=	meter = 39.37 inches
m^2	=	square meter = 10.76 square feet
m^3	=	cubic meter = 35.31 cubic feet
mA	=	milliampere = 0.001 amperes
MCal	=	megacalorie = 1 million calories
metric ton	=	1 thousand kilograms = 1.1023 U.S. tons
mg	=	milligrams
min	=	minute
MJ	=	megajoules
mm	=	millimeter = 0.03937 inches
MPa	=	1 million pascals = 145.04 pounds per square inch
MVA	=	megavolt-amperes
MW	=	megawatt = 1 million watts
MWh	=	megawatt hours = 1 million watt hours
NG	=	natural gas
nm	=	nanometer
Nm^3	=	cubic meters at standard conditions of temperature and pressure (20°C and 1 atmosphere)
NO_x	=	nitrogen oxide
O_2	=	oxygen
P	=	pressure
PC	=	personal computer
ppm	=	parts per million
psi	=	pounds per square inch
psig	=	pounds per square inch (gauge)
R	=	ruble
s	=	second
SO_2	=	sulfur dioxide
sq ft	=	square feet
Tcal	=	tetracalorie = 1 trillion calories = 3.968 billion BTU
T	=	temperature
TPS	=	Thermal Power Station
V	=	volts
VA	=	volt amps
VARs	=	volt-amps reactive
yr	=	year

APPENDIX F

Letters of Receipt for Equipment
Energy Audit Items Lists

Міністерство енергетики та електрифікації України
БУРШТИНСЬКА ДЕРЖАВНА РАЙОННА ЕЛЕКТРОСТАНЦІЯ
BURSHTYN БУРШТИНСЬКА ДРЕС

285127 м. Бурштин Івано-Франківської області
Телефон 57-480 телетайп 292140 "Лінза" телефакс 57230

6 03 95 N 09-291

На N _____ від _____

Расчетный счет 00022190I в Бурштынском Промсвязьбанке г.Бурштын МФО 336417 индекс 285127.

Настоящим подтверждается, что представителем американской компании "Бернз энд Роу" Джоном Холбергом переданы Бурштынской ТРЕС следующие электронно-измерительные приборы:

I. Модель 2000 "ЕНЕРАК", Анализатор процесса сгорания, включая:
   - зонд;
   - программное обеспечение Виндоус.
2. Флюк. Модель 4I. Анализатор гармоник электричества, включая:
   - клеши для тока 500 А;
   - клеши для тока I000 А ;
   - программное обеспечение ;
   - портфель для прибора.
3. "Минолта" 300 НФ/300
   Бесконтактный определитель температуры.
4. Переносной компьютер фирмы Тексас.
5. Принтер "Окидата". Модель 380.
6. Сопутствующее оборудование:
   - 2 комплекта кабелей для модема;
   - устройство для подзарядки батарей;
   - аккумуляторы типа "С"
   - конвертор напряжения и вилки;
   - модем;
   - программа для установки русского языка
   - руссифицированная клавиатура
   - программное обеспечение Ворд Перфект;
   - программное обеспечение Виндоус
   - программное обеспечение "Лотос"
   - программное обеспечение Проком Плас

06 0. 95 97

Приборы были закуплены, доставлены и переданы Бурштынской ГРЭС в рамках программы Агенства по Международному Развитию США "Повышение эффективности работы украинских ТЭС".

Приборы переданы Бурштынской ГРЭС в качестве безвозмездной помощи Украине со стороны правительства США в рамках двухсторонней договоренности и технико-экономическим содействии Украине со стороны США.

John E. Hallberg

Д.Холберг, ст.инженер

"Бернз энд Роу

Директор
Бурштынской ГРЭС

.И.Бозененков

Министерство энергетики и электрифікації України
Бурштинська державна районна електростанція
БУРШТИНСЬКА ДЕРЖАВНА РАЙОННА ЕЛЕКТРОСТАНЦІЯ
3 ДЕЕС СССР

TOTAL P.03

93

ENERGY AUDIT ITEMS

POWER PLANT ENERGY SAVINGS

Deaerator vents

Steam Traps

Boiler Blowdown

Mazut tanks vents & leaks

Leaks - Steam & feedwater & compressed air and Nat. gas

Boiler leaks - fire box, flue gas ducts

ID fan wear, eff., leakage

FD Fans wear, eff., leakage

Air heater leakage, ESP leakage, efficiency if coal

Insulation-boiler, heaters, deaerator, piping, duct work

Generator losses - cooling system eff. (scale, crud)

Condenser/vac - leakage, cooling water fouling

ASME Short form (heat rate) & PT6 abbreviated

Boiler feed pumps - seals leakage

Valve Stem packing leaks

Turbine lube oil system - cooling system (scale, crud)

Boiler combustion - excess air, orsat, fuel flow, air flow, temp, press., burners, carbon losses

Electrical losses - transformers, large motors

District heating water losses (quantify)

ВОПРОСНИК ПО УЛУЧШЕНИЮ КПД СГОРАНИЯ НА УКРАИНСКИХ ЭЛЕКТРОСТАНЦИЯХ

Следующая работа будет проведена на каждой из электростанций, как минимум:

* Представление и обмен информацией с руководством станции

* Обсуждение и представление обьема работ

* Оценка технических и организационных возможностей

* Установление возможных направлений сотрудничества

* По возможности определение помощи на местах

* Определение и координирование рабочего графика

* Дискуссии с персоналом, отвечающим за работу станции

* Определение наличия существующих источников информации и данных

* Определение данных о работе станции на всем протяжении ее существования

* Визит на станцию для определения требований к выбранному измерительному оборудованию:

  Анализаторы сгорания
  Счетчики потока топлива (газ, нефть или уголь)
  Кислородные анализаторы

* Ознакомление с существующими чертежами по трубопроводам и измерительной технике для определения местонахождения пунктов мониторинга

* Определение физического местоположения для установки первичного элемента

* Определение местоположения для установки дистанционных модулей мониторинга

* Подбор персонала для обучения на местах навыкам проведению аудита

CHECKLIST
IMPROVING COMBUSTION EFFICIENCY
UKRAINIAN POWER PLANTS

The following work will be performed at each plant, as a minimum·

- Introduction and information exchange with plant management
- Discussion and presentation of the scope of work
- Identify the persons to be assigned for hands-on audit training
- Provide training and assistance to the team selected on the use of the demonstration portable instrumentation
- Perform audit tests
- Leave behind the demonstration portable instruments
- Determine physical locations for installing the stationary instruments
- Determine locations for installing the remote monitoring modules
- Determine physical characteristics related to the locations for the stationary instruments

ПЕРЕЧЕНЬ МЕРОПРИЯТИЙ ПО ПОВЫШЕНИЮ ЭФФЕКТИВНОСТИ ПРОЦЕССОВ ГОРЕНИЯ ТОПЛИВА НА УКРАИНСКИХ ЭЛЕКТРОСТАНЦИЯХ.

В качестве программы минимума на каждой станции будет произведен следующий объем работ:

- Представление и обмен информацией с администрацией станции;

- Обсуждение и представление объема работ;

- Назначение персонала для проведения аудита;

- Обучение и помощь в обучении выбранного персонала по вопросам применения портативного оборудования;

- Передача демонстративного портативного оборудования;

- Определение места для установки стационарного оборудования;

- Определение места для установки дистанционных измерительных модулей;

- Определение физических характеристик оборудования ТЭС для установки стационарных приборов;

APPENDIX G

Reference

1. Plant Audit Visit Trip Report, October 1994
2. Preliminary Audit Report, December 1994
3 Plant Audit Visit Trip Report, Team #2, March 1995
4. Follow-up Audit Trip Report, July-August 1997

DRAFT

TRIP REPORT

DELIVERY ORDER NO. 6 - TASK 2

ENERGY EFFICIENCY AND RELIABILITY

OCTOBER 8-11, 1994

BURSHTYN CHP PLANT

A reconnaissance visit was made to the Burshtyn Combined Heat and Power (CHP) Plant to meet with key personnel and to gather information and data regarding the CHP plant, operations, performance and problems. The following key personnel were identified and/or met with:

Igor I. Bozenenkov - Director
Orest O. Daniluk - Deputy Director (Technical)
Ginady - Deputy Director (Economics)
Voldodymyr G. Zdanovsky - Chief Engineer
Nickoli Kobzev - Deputy Chief Engineer for Reconstruction and Development
Ivan Berkosha - Chief of Technical Department
Andre Fedunkef - Chief, Boilers and Turbines
Victor Matievsky - Chief, Instrumentation
Olga Baron - Deputy Chief of Water Treatment

PURPOSE

The purpose of this trip was to identify deficiencies in existing instrumentation required for monitoring, controlling and recording performance of CHP Plant steam boilers combustion efficiencies and water and steam quality as described in delivery order No. 6. This information is required for defining Scope of Work and necessary instrumentation and equipment required for performing the CHP Plant Energy Audit to be described in the Deliverable "Project Plan" to be submitted for USAID/Kiev approval.

DISCUSSION

General Description of the Plant

See attached previously written report. Block 12 is now under reconstruction including turbine repair, new HP and LP cylinders, and a new 99% efficient Russian electrostatic precipitator. The next precipitators for block 11 and block 7 reconstruction in 1995 will be Ukrainian manufacture. The boiler has all critical pressure parts and membranes replaced and the steam drum checked, with an expected 20-25 year life extension. This will restore the rating of block 12 to upgraded 225 MW design and will be finished in April 1995.

Transmission distribution levels are 220 KV, 330 KV and 400 KV.

The L'VIVENERGO System is comprised of the following plants:

1. BURSHTYN - 2400 MW
2. KALUSH TPP - 160 MW
3. DOBROTVOR APP - 900 MW
4. IVANOFRANKOVSK - 5 MW Thermal
5. L'VIV TPP - 10 MW

Coal Feed System

The Burshtyn power station has more than thirty (30) suppliers of anthracite coal located in the Ukraine, Donbas, Poland, Lublin, Russia, Kubits, and Kazakstan, so there is considerable variation in fuel characteristics. Generally, the coal has a high volatiles content of about 30%, an ash content of 24-55%, a moisture content of 7-20%, a sulfur content of 1.5-3.7%, and a heating value of 2500-5000 kcal/kg. Because of the importance of this plant for power export, there are two main coal conveyors from reclaim, one to each end of boiler house.

Each of the twelve boilers has two raw coal bunkers which are fed from the tripper belts. Coal from each bunker is fed on two constant speed conveyors (except block 5 variable speed) to the ball mills and the height of a gate on each conveyor can be varied to produce a given volumetric feed rate. Flue gas is fed to the ball mills to dry the coal.

Pulverized coal from each ball mill is transferred to a cyclone separator and then from a pulverized coal bunker through motor driven rotary vane feeders to each of the sixteen (16) burners on a boiler. The speed of these rotary vane feeders can be varied to produce different coal feed rates.

Natural Gas and Mazut Feed Systems

Natural gas is the startup fuel and is used between 0% and 30% load (60 MW for each block). Each boiler has two natural gas supply lines, a 0-2000 m^3/hr startup line and a 18-64,000 m^3/hr full flow line. Both lines to all twelve boilers include flowmeters and pressure indicators so that the mass flowrate of natural gas can be determined, but mass flowrate cannot be directly indicated or recorded. However, main gas flow to the power plant is measured and recorded. Because of possible variations in heating value, installation of an on-line calorimeter would account for errors in fuel gas delivery by measuring and recording Kcal/Nm^3, Sp. gr. and Wobbe index. Accurate heat input to individual boilers can be derived from this data.

Mazut is an emergency backup fuel. It is unloaded from 12 rail cars at a time to underground concrete tanks, then pumped to and stored in four (4) 20,000 m^3, (2) 2,000 m^3, and (2) 1,000 m^3 storage tanks. At present, tank level cannot be determined accurately.

Mazut is supplied to all of the boilers at 130 C and about 20 atm in a recirculating piping system. The oil lines have thick plate orifices and DP cells, and the flow meters do not work because the DP taps become plugged and tar solids build up on the orifice plates. Because these boilers burn up to 20% mazut, more accurate non-invasive type flow elements such as ~~Coriolis~~ SONIC

mass flow meters must be installed for monitoring and controlling fuel input. Each boiler has a 159 mm diameter 0-20 T/H mazut supply line and a 66 mm diameter 0-10 T/H mazut return line.

Combustion Controls

Combustion control is remote manual from a central control room. Operators can adjust gas control valve position, mazut control valve position or rotary vane coal feeder speed so that the quantity of steam is sufficient to maintain turbine load. Operators can also adjust FD and ID fan dampers based on absolute pressure in a furnace, but the four O_2 analyzers per boiler are known to be inaccurate, therefore air flow control is also based on guesswork.

The existing 0_2 analyzers of Russian design and manufacturer require frequent maintenance and calibration. The steam boilers flue gas samples are drawn from the backpass after the superheater and before the first stage reheater where pressure is slightly negative, temperature about 550 C +/-. The sample line is about 108 mm in dia. and about 70 m long. Although these analyzers are functional, they are subject to drift and significant lag time as well as inaccurate readings due to air in-leakage. This results in less than optimum control of excess air for efficient combustion which results in waste of fuel.

Environmental Monitoring

Downwind dispersion concentrations of ash, NO_x, SO_2, CO_2 are checked once per month by power plant laboratory at 2.5, 5.0, 8.0 and 10 Km. The government district center sanitary laboratory in L'VIV makes random tests when plant is at full load.

Condenser Cooling Water

Condenser cooling water is taken from an artificial lake which was created by damming a river at the same time the plant was constructed. The lake is used as a fish farm and chemicals cannot be used to maintain condenser cleanliness, therefore condenser fouling with $CaCO_3$, $MgCO_3$ and organics is a significant problem.

Each condenser is cleaned twice per year and the average deposit thickness at the time of a cleaning is 3-4 mm. At the time of a condenser cleaning, there is a loss of condenser vacuum from 0.036 kg/cm^2 to 0.039 kg/cm^2 absolute pressure which causes a 5 MW loss in generator output. Two condensers have Ukrainian design ball cleaning systems which were installed in 1990.

Boiler Makeup Water and City Water Treatment

Lake water makeup is heated and sent to four (4) 150 T/H clarifiers and six (6) 3.0 meter diameter anthracite filters. From that point water is sent to the city hot water district heating system softeners and to the boiler makeup water demineralizer. City water demand is 300 T/H and boiler makeup water demand is 240 T/H, and these two flows should be within the design rating of the equipment. However, the ion exchange material in the demineralizer is in such

poor condition that 100 T/H are consumed in regenerating it. Also, the clarifiers are overloaded, suspended solids are overflowing, and large quantities of water are needed to backwash the filters.

As a result of these conditions, the plant can meet a demand of 240 T/H for boiler feedwater, but can only supply 200 T/H to the city. The quality of city water is also not good due to high bacteria count. Another result of these conditions is high consumption of sulfuric acid and caustic soda for demineralizer regenerations.

Rehabilitation Plans

IMPRESSARIO AGRUPADOS, an engineering consulting firm from Spain conducted a major rehabilitation study in 1993 for EBRD. They evaluated seven alternatives for rehabilitation, including rebuilding boilers and replacing turbines with upgraded 225 MW machines, adding scrubbers, precipitators, replacing boilers with circulating fluidized bed (CFB) boilers, and gas turbine combined cycle repowering.

They are very interested in learning more about CFB technology as a solution to the problems resulting from poor coal - SO_2, NO_X, and high maintenance on the old Taganrog PC boilers.

They are also interested in western technology for instrumentation and control, and want to upgrade the automation on the rehabilitated block 12 as a demonstration project. Experience gained from application of a Distributed Control System (DCS) to block 12 would be applied to the 1995 reconstruction of blocks 11 and 7.

A list of priority instruments (attached) was provided itemizing as a minimum primary field instruments (transmitters, etc.) which are presently needed for block 12.

They are planning to add one or two gas fired peaker boilers to meet additional hot water district heating demand from city.

Power plant design work is being done by Ukraine Teploelectroproject, L'VIV Research Institute and Transmission design is being done by Electrosetproject in L'VIV.

Management Capabilities

The CHP plant management gathers detailed information and performance data on all aspects of the equipment operation and maintenance. Therefore, data on gas and mazut fuel consumption, gross and net KW output, steam and hot water (gcal heat) for monthly (heating periods) and annual basis is easily obtained. This data will be used for comparing CHP plant performance audit before and after implementation of "no cost - low cost" efficiency improvement equipment and procedures to improve monitoring and energy management.

The plant personnel are very knowledgeable and cooperative. They are aware of equipment and instrument deficiencies and the need for upgrading and applying western technology for improving combustion and energy efficiency.

RECOMMENDATIONS

BURSHTYN CHP PLANT

Audit Equipment

(1) Portable combustion analyzer (with spare cells)

(1) Laptop computer with software

(1) Heat spy (portable infrared temperature monitor)

Combustion Controls - Purchase the following for installation by plant personnel:

(2) On-line coal analyzers for moisture, ash, and heat capacity (Proximate)

(1) On-line calorimeter for natural gas (Kcal/Nm^3, Wobbe index)

(12) Mazut flowmeters for 159 mm diameter supply lines

(12) Mazut flowmeters for 60 mm diameter return lines

(8) Mazut tank ultrasonic level transmitters

(1) Combustion control system for Block 12

(1) CEM system for one of the three stacks

(48) O_2 analyzers rated for 570°C (500 mm wall, 40-70 m length)

(List) Priority instruments for Block 12 (transmitters, etc.)

Water Treatment Equipment - Purchase the following for installation by plant personnel:

(10) Ukrainian manufactured condenser ball cleaning systems (approximate cost = 150,000 roubles each - 1990)

(6) pH analyzers

(2) Silica analyzers

(78) Cubic meters of weak acid cation resin

(90) Cubic meters of strong acid cation resin

(26) Cubic meters of weak base anion resin

(10.5) Cubic meters of strong base anion resin

(1) Ammonium cycle condensate polisher rated for 500 m^3/hr

Laboratory Equipment - pH and silica

(1) Parr or equal bomb calorimeter for coal and mazut analysis

(1) pH meter

(1) Silica analyzer

BURSHTYN CHP PLANT

DESIGN COAL ANALYSIS (200 MW)

TAGANROG T-TYPE TP100 BOILERS

As	=	36.0%
C	=	40.7%
O_2	=	6.2%
H_2	=	2.2%
S	=	2.5%
N	=	0.9%
H_2O	=	11.0%
Volatile	=	38.6%
Q	=	3800 Kcal/Kg

PRESENT COAL ANALYSIS VARIATIONS (170 MW)

One Million Ton Storage, 30 Sources of Supply

	Minimum	Average	Maximum
Moisture	7%	12%	20%
Ash	24%	35%	55%
Kcal/Kg	2500	3200	5000
Sulfur	1.5%	2.4%	3.7%
Volatiles	30%	30%	42%
Holdup time, hrs	1 Hr	2 Hrs	3 Hrs

BOILERS PERFORMANCE

BURSHTYN CHP PLANT

	Tagaurog	Air Heaters	Design Efficiency	Present Efficiency
Units 1 - 7	TP-100	4 - Ljungstrom air heaters/ boiler	90%	87%
		Units 1, 4 & 5 reconstructed with pipe air heaters		
Units 8 - 12	TP-100A	Pipe air heaters	91%	89%

Note: Design excess air less than 40% with 5000 Kcal/Kg coal
Now excess air is 55 to 80%

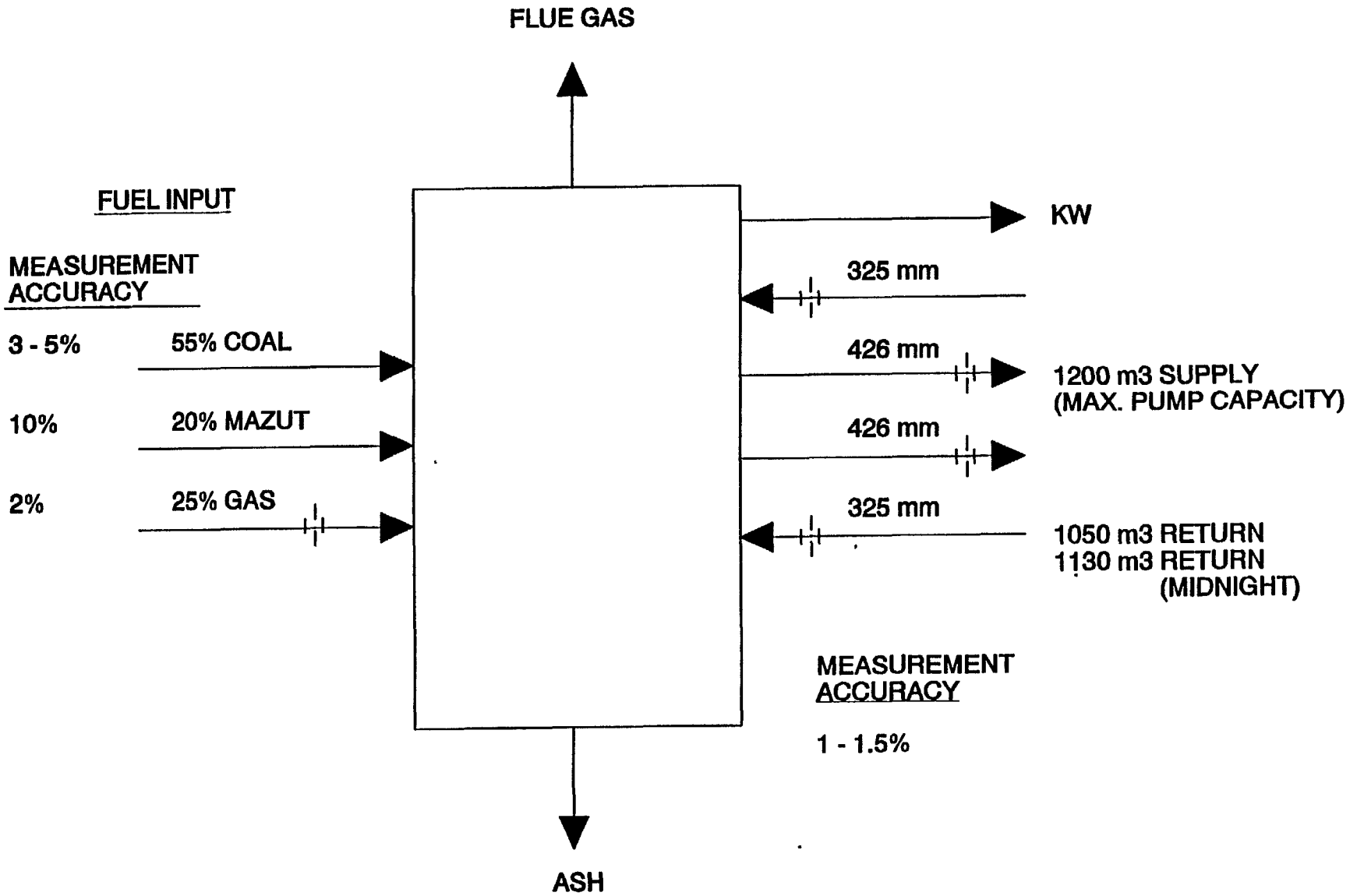

BURSHTYN CHP PLANT

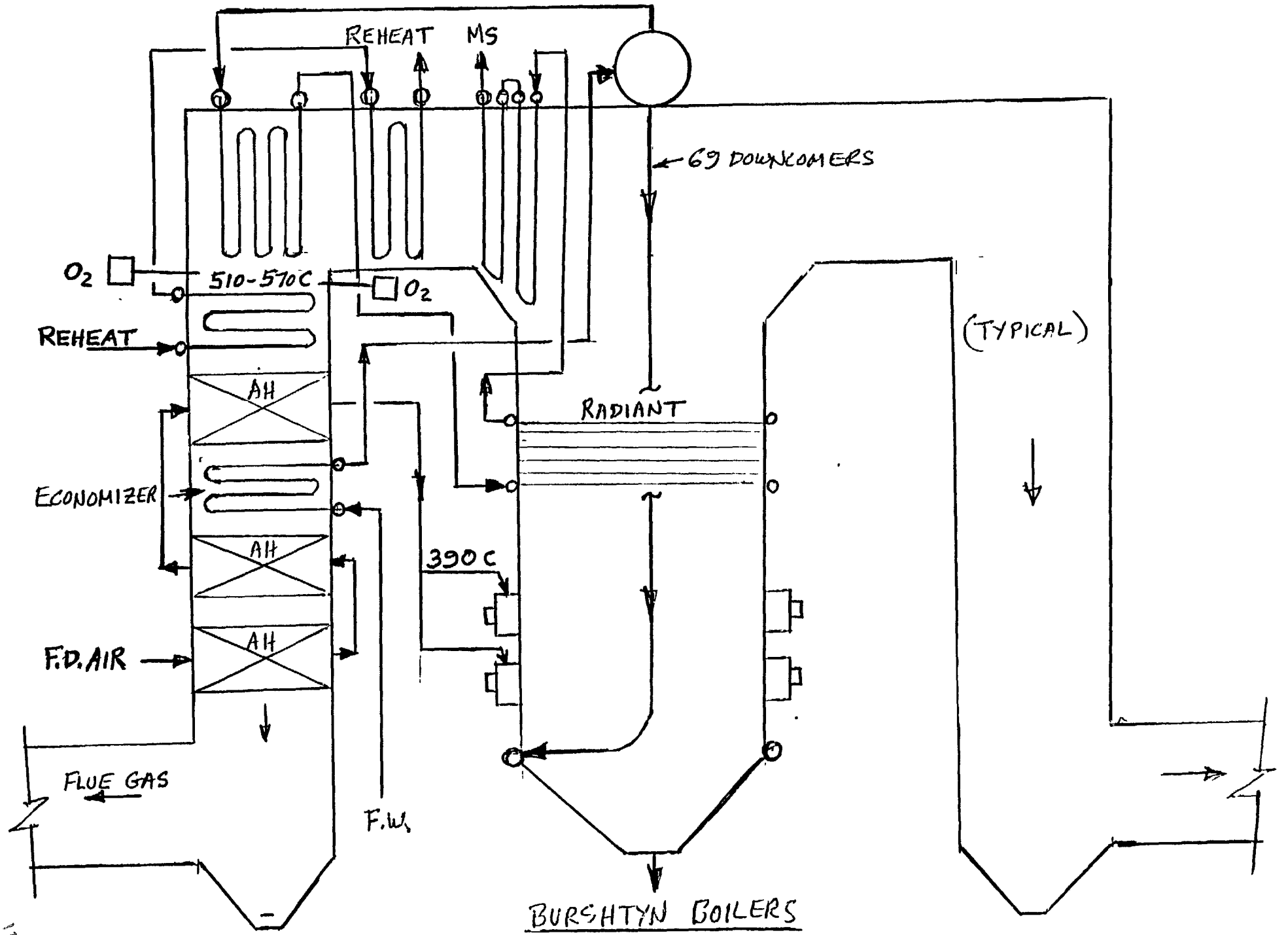
REHEAT
MS
69 DOWNCOMERS
O_2
510-570C
O_2
REHEAT
AH
RADIANT
(TYPICAL)
ECONOMIZER
AH
390 C
AH
F.D. AIR
FLUE GAS
F.W.
BURSHTYN BOILERS

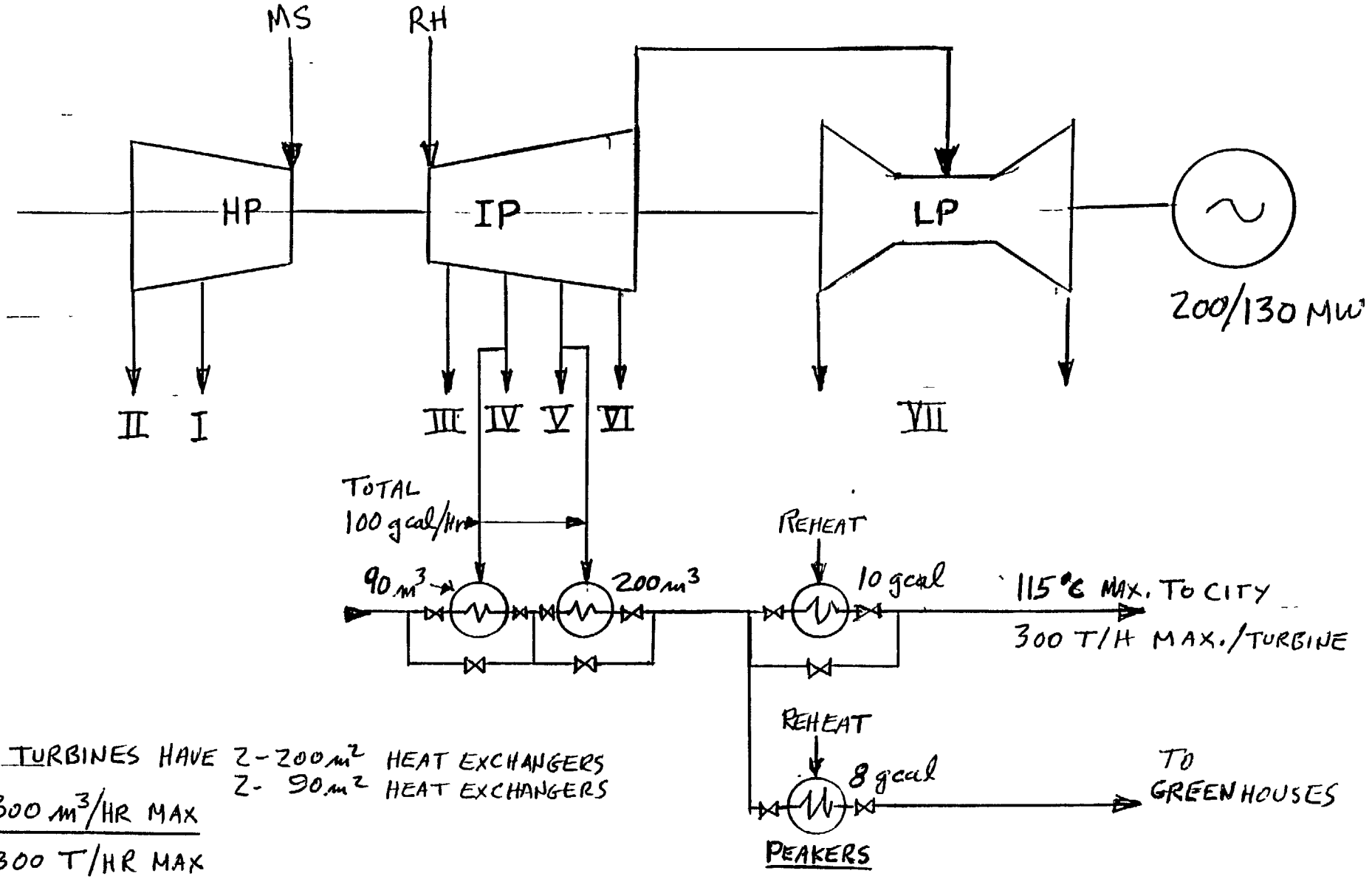

11 TURBINES HAVE 2-200 m² HEAT EXCHANGERS
2- 90 m² HEAT EXCHANGERS

300 m³/HR MAX

3300 T/HR MAX

1200 T/HR MAX PUMP CAPACITY

K-200-130-1

BURSHTYN CHP TURBINES

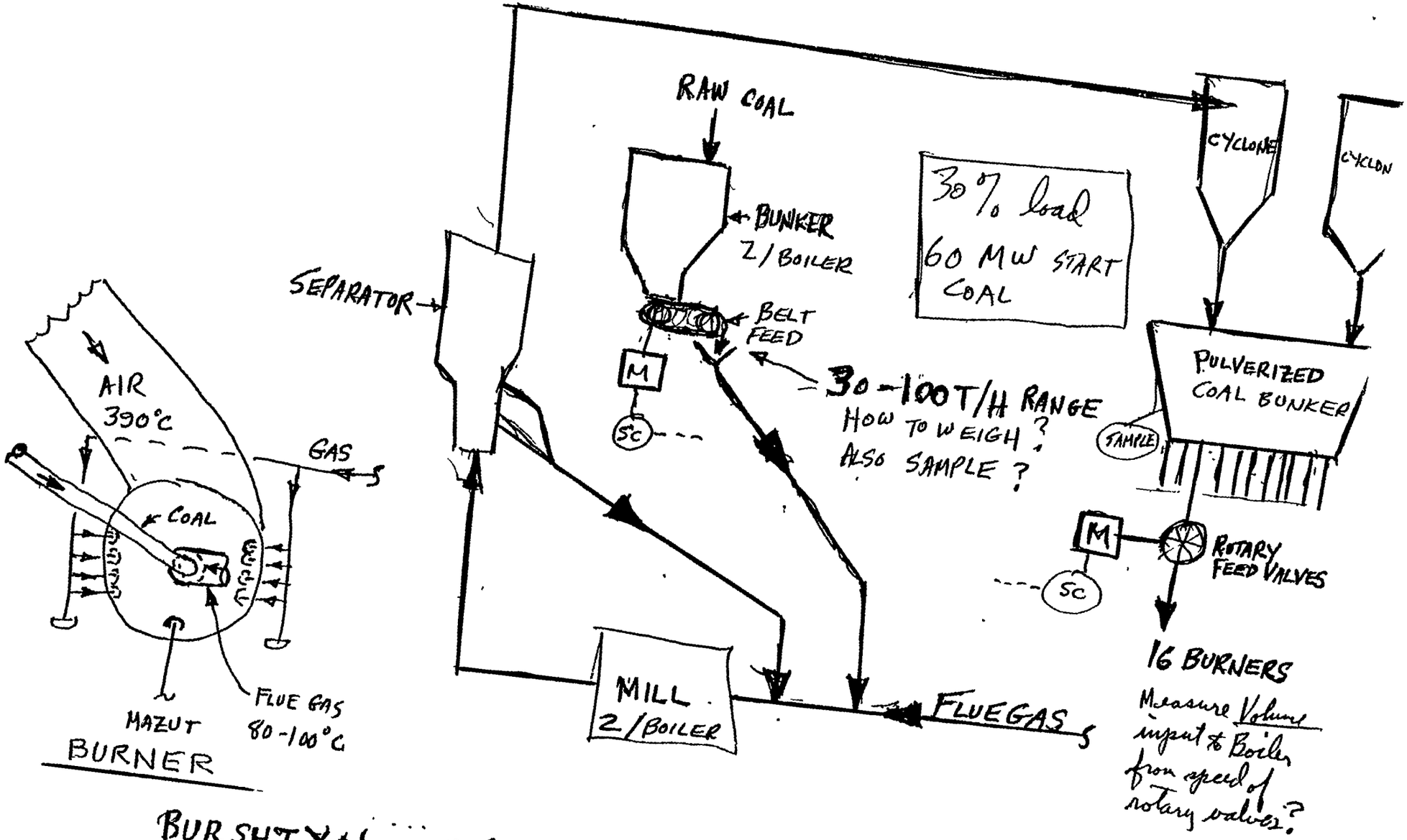

BURSHTYN Sat 8 October 1994

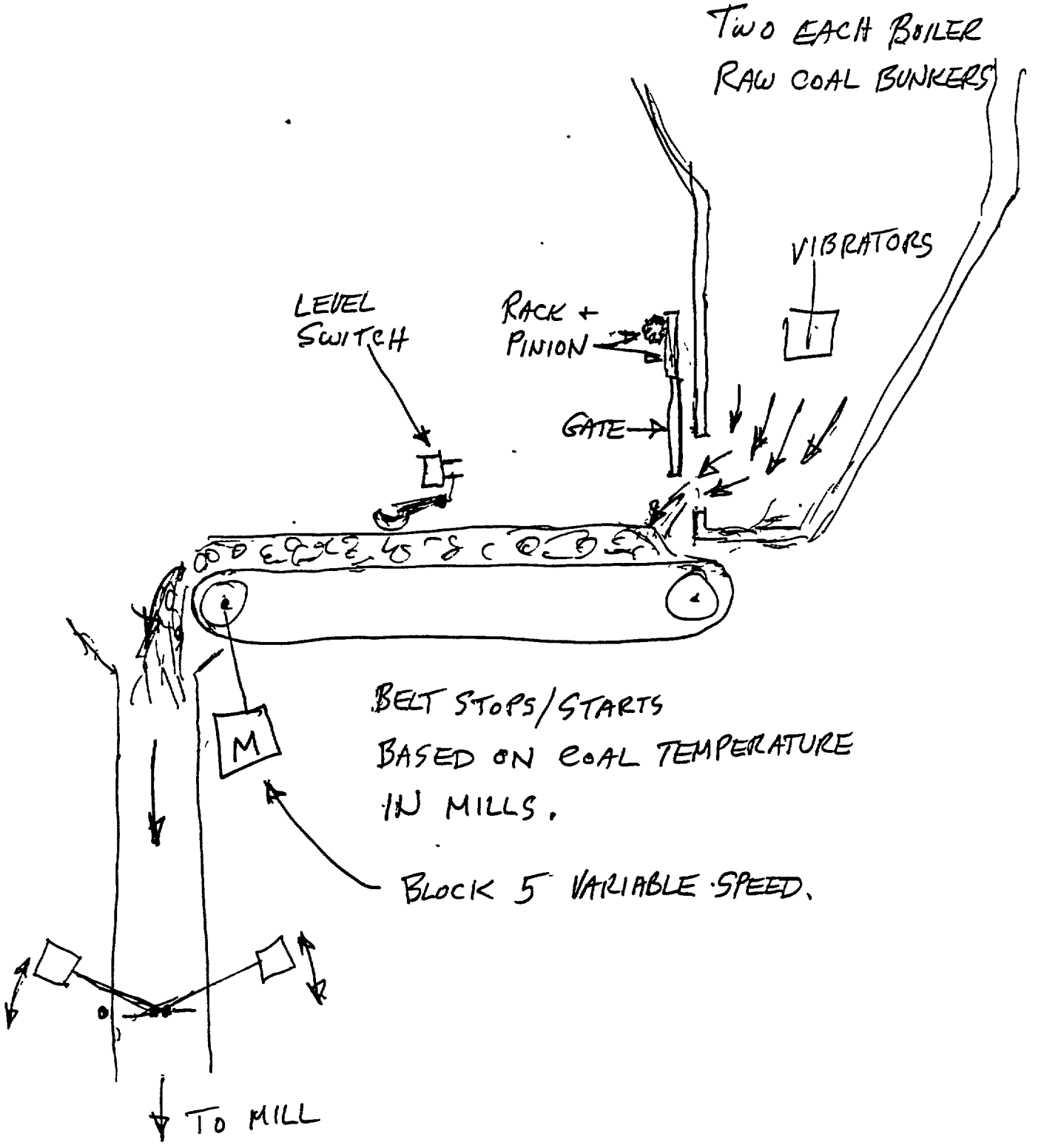

BURSHTYN

MON 10 OCT 1994

BURSHTYN
SHUTDOWN
SCHEDULE

"ЗАТВЕРДЖУЮ"
Головний інженер БуДРЕС
Здановський В.Г.
22 червня 1994р.

ПОПЕРЕДНІЙ ГРАФІК
ремонтів енергоблоків Бурштинської ДРЕС на 1995 рік.

		JAN	FEB	MAR	APR	MAY	JUNE	JULY	AUG	SEP	OCT	NOV	DEC
	вид рем	січень	лютий	березень	квітень	травень	червень	липень	серпень	вересень	жовтень	листопад	грудень
1	П		DATES					10 — 22					
2	С		13 —	— 14									
3	К П	—	— 10									6 —	— 18
4	С								28 —	— 25			
5	П					8 —	— 21						
6	С						5 —	— 3					
7	К			13 —	RECONSTRUCTION					— 14			
8	П										2 —	— 14	
9	П										23 —	— 4	
10	П				10 —	— 22							
11	К							31 —	RECONSTRUCTION				
12	П											27 —	— 9

Заступник головного інжинера Домрян М.М.

Начальник ВПР Гртнчук Е.К.

112

PRIORITY LIST OF INSTRUMENTS

П Е Р Е Ч Е Н Ь

автоматических регуляторов блоков 200 МВт
Бурштынской ГРЭС
BURSHTYN

№ п/п	Наименование регулятора	Наименование импульсов	К-во сигналов	Тип выходного сигнала
I	2	3	4	5
I.	Регулятор питания № I	I. Расход питательной воды 2. Расход острого пара 3. Уровень в барабане	3	0÷5 мА
2.	Регулятор питания № 2	I. Расход питательной воды 2. Расход острого пара 3. Уровень в барабане	3	0÷5 мА
3.	Регулятор топлива (на угле)	I. Давление острого пара в перемычке перед турбиной 2. Сигнал обратной связи от СБР 3. Коррекция по О2	5	0÷5 мА
4.	Регулятор топлива (на газе)	I. Давление острого пара в перемычке перед турбиной 2. Расход газа на котел 3. Давление в барабане котла	3	0-5 мА
5.	Регулятор разрежения в топке котла	I. Разрежение в топке котла 2. Сигнал обратной связи основного регулятора 3. Сигнал обратной связи следящего регулятора	3	0-5 мА

I	2	3	4	5
6.	Регулятор воздуха	I. Сигнал по перепаду воздуха "калорифер - II ступень воздухо - подогревателя" 2. Сигнал по расходу острого пара 3. Сигнал обратной связи основного регулятора 4. Сигнал обратной связи следящего регулятора 5. Корекция по 02.	9	0÷5 мА
7.	Регулятор температуры пара ШШ; I-IУ потоки	I. Сигнал по температуре пара соответствующего потока (I÷IУ) до впрыска 2. Сигнал по скорости изменения температуры за впрыском	8	0÷5 мА
8.	Регулятор температуры пара промперегрева, I÷IУ потоки	I. Сигнал по температуре пара соответствующего потока (I÷IУ) 2. Сигнал по скорости изменения температуры за впрыском.	8	0÷5 мА
9.	Регулятор непрерывной продувки котла	I. Сигнал по расходу острого пара 2. Сигнал по расходу продувочной воды	2	0÷5 мА
10.	Регулятор ВКШ	I. Сигнал по давлению в коллекторе пара на горелки котла	1	0÷5 мА
11.	Регулятор фосфатирования	1. Сигнал по pH котловой воды	1	0-5 мА

1	2	3	4	5
12.	Регулятор уровня в ПВД-5	1. Сигнал по уровню в ПВД-5 2. Сигнал обратной связи	2	0÷5 мА
13.	Регулятор уровня в ПВД-6	1. Уровень в ПВД-6 2. Сигнал обратной связи по положению клапана	2	0÷5 мА
14.	Регулятор уровня в ПВД-7	1. Уровень в ПВД-7 2. Сигнал обратной связи по положению РО	2	0÷5мА
15.	Регулятор уровня в ПНД-4	1. Уровень в ПНД-4 2. Обратная связь по положению РО	2	0÷5 мА
16.	Регулятор уровня в ПНД-3	1. Уровень в ПНД 2. Обратная связь по положению РО	2	0÷5 мА
17.	Регулятор уровня в ПНД-2	1. Уровень в ПНД-2 2. Обратная связь по положению РО (в ЛОК) 3. Обратная связь по положению РО (в конденсатор)	3	0÷5 мА
18.	Регулятор уровня ОПУ (ПН-100)	1. Уровень в ОПУ 2. Обратная связь по положению РО	2	0÷5 мА
19.	Регулятор уровня в конденсаторе	1. Уровень в конденсаторе 2. Обратная связь по положению РО	2	0÷5 мА
20.	Регулятор уровня в деаэраторе 6АТа	1. Уровень в Д-6 ата 2. Обратная связь по положению Ро	2	0÷5 мА

115

1	2	3	4	5
21.	Регулятор давления пара на уплотнения	1. Давление в коллекторе уплотнений	1	0÷5 мА
22.	Регулятор давления в деаэраторе 6 ата	1. Давление в Д-6ата	1	0÷5 мА
23.	Регулятор давления РОУ-25/10	1. Давление в коллекторе РОУ-25/10	1	0÷5 мА
24.	Регулятор уровня в основном бойлере	1. Уровень в основном бойлере 2. Обратная связь по положению Ро	2	0÷5 мА
25.	Регулятор уровня в пиковом бойлере	1. Уровень в пиковом бойлере 2. Обратная связь по положению РО	2	0÷5 мА
26.	Регулятор температуры сетевой воды	1. Температура сетевой воды 2. Температура окружающего воздуха	2	0÷5 мА
		ИТОГО:	73	

116

CHECK LIST
IMPROVING COMBUSTION EFFICIENCY
UKRAINIAN POWER PLANTS

The following work will be performed at each plant, as a minimum:

- Introduction and information exchange with plant management
- Discussion and presentation of the scope of work
- Assess both technical and managerial capabilities
- Establish points of contacts
- Identify any local support, if available
- Identify and coordinate the work schedule
- Discussion with key personnel regarding operation of the plant
- Determine the availability of the existing sources of information and data
- Determine the plant historical operating data
- Walk through the plant to determine the requirements for selected instrumentations:

  Combustion analysers
  Fuel flow meters, gas, oil or coal
  Oxygen analyzers

- Review of existing P&ID's to determine locations of monitoring points
- Determine physical locations for installing the selected primary element
- Determine locations for installing the remote monitoring modules
- Identify the persons to be assigned for on-the-job audit training

ENERGY AUDIT ITEMS

POWER PLANT ENERGY SAVINGS

Deaerator vents

Steam Traps

Boiler Blowdown

Mazut tanks vents & leaks

Leaks - Steam & feedwater & compressed air and Nat. gas

Boiler leaks - fire box, flue gas ducts

ID fan wear, eff., leakage

FD Fans wear, eff., leakage

Air heater leakage, ESP leakage, efficiency if coal

Insulation-boiler, heaters, deaerator, piping, duct work

Generator losses - cooling system eff. (scale, crud)

Condenser/vac - leakage, cooling water fouling

ASME Short form (heat rate) & PT6 abbreviated)

Boiler feed pumps - seals leakage

Valve Stem packing leaks

Turbine lube oil system - cooling system (scale, crud)

Boiler combustion - excess air, orsat, fuel flow, air flow, temp, press., burners, carbon losses

Electrical losses - transformers, large motors

District heating water losses (quantify)

PRELIMINARY AUDIT REPORT
IMPROVING COMBUSTION EFFICIENCY

BURSHTYN POWER PLANT
(OCT. 8 THRU OCT. 11, 1994)

PREPARED BY: BURNS AND ROE, INC. ORADELL
JOHN E. HALLBERG, P.E.
CLIFF CROSMAN

DECEMBER 1994

5906-02/Cover/12/9/94

PRELIMINARY AUDIT REPORT
IMPROVING COMBUSTION EFFICIENCY

BURSHTYN POWER PLANT

TABLE OF CONTENTS

	PAGE
EXECUTIVE SUMMARY	1
INTRODUCTION	4
GENERAL DESCRIPTION OF THE PLANT	4
COAL FEED SYSTEM	4
NATURAL GAS AND MAZUT FEED SYSTEMS	5
COMBUSTION CONTROLS	5
ENVIRONMENTAL MONITORING	5
CONDENSER COOLING WATER	6
BOILER MAKEUP WATER AND CITY WATER TREATMENT	6
DISTRICT HEATING	6
REHABILITATION PLANS	6
MANAGEMENT CAPABILITIES	7
ATTACHMENTS 1 TO 13	

120

PRELIMINARY AUDIT REPORT

IMPROVING COMBUSTION EFFICIENCY

BURSHTYN POWER PLANT
(Oct. 8 Thru Oct. 11, 1994)

EXECUTIVE SUMMARY

The preliminary audit activities consist of a reconnaissance visit made to the plant to meet with key plant personnel, to establish local contacts, to collect information regarding boilers, combustion process and controls, fuel management and general plant operations.

The energy saving program consists of providing instrumentation equipment to improve combustion efficiency of the boilers, as a first step towards the life extension of the plant. The implementation of this program is in two phases. During the first phase in order to demonstrate the improvement of boiler's combustion efficiency, the instruments to be installed are listed under Low-Cost, No-Cost Short Term Recommendations and are related to one boiler except as noted. Based on operation results the program may be expanded to the balance of the boilers in the plant. Implementation of the second phase is addressed under the Medium to Long-Term Recommendations.

Based on the preliminary survey of this plant the following are Low-Cost, No-Cost Short Term and Medium and Long Term recommendations:

Low-Cost, No-Cost Short Term Recommendations

1) One (1) Portable combustion analyzer (with spare cells) with probes

2) One (1) Laptop computer with software

3) One (1) Heat spy (portable infrared temperature monitor)

4) One (1) Portable multimeter ac power analyzer

5) One (1) On-line calorimeter for natural gas (Kcal/Nm^3, Wobbe index)

6) One (1) Mazut flowmeter for 159 mm diameter supply line

7) One (1) Mazut flowmeter for 60 mm diameter return line

8) Eight (8) Mazut tank ultrasonic level transmitters

121

9) Four (4) O_2 analyzers rated for 570°C (500 mm wall, 40-70 m length)

10) Two (2) On-line coal analyzers for moisture, ash, and caloric value-(Proximate)

11) Laboratory equipment

   a) One (1) Parr or equal bomb calorimeter for coal and mazut analysis

   b) One (1) pH meter

   c) One (1) Silica analyzer

<u>Medium to Long-Term Recommendations</u>

1) One (1) combustion control system for Unit 12

2) Eleven (11) Mazut flowmeters for 159 mm diameter supply lines

3) Eleven (11) Mazut flow meters for 60 mm diameter return lines

4) One (1) CEM (Continuous emission monitoring) system for one of the three stacks

5) (List) Priority instruments for Unit 12 (see attachment)

6) Water Treatment equipment

   a) Six (6) pH analyzers

   b) Two (2) Silica analyzers

   c) Seventy eight (78) Cubic meters of weak acid cation resin

   d) Ninety (90) Cubic meters of strong acid cation resin

   e) Twenty six (26) Cubic meters of weak base anion resin

   f) Eleven (11) cubic meters of strong base anion resin

   g) One (1) Ammonia cycle condenser polisher rated for 500 m^3/hr

   h) Ten (10) condenser ball cleaning systems similar to the existing systems installed in 1990

   i) Forty four (44) O_2 analyzers rated for 570°C (500 mm wall, 40-70m length)

122

The above recommendations are preliminary and subject to further review and refinement based upon completion of final audit and associated tests and measurements.

123

INTRODUCTION

ENERGO SYSTEM:	LVIVENERGO
LOCATION:	60 KM SOUTH OF LVIV
INSTALLED CAPACITY:	2400 MW (12 X 200 MW)
COMMISSIONED:	1965-1969
FUEL:	ANTHRACITE, GAS AND MAZUT

GENERAL DESCRIPTION OF THE PLANT

Unit 12 is now under reconstruction including turbine repair, new HP and LP cylinders, and a new 99% efficient Russian electrostatic precipitator. The next precipitators for Unit 11 and Unit 7 reconstruction in 1995 will be Ukrainian manufacturer. The Unit 12 boiler has all critical pressure parts and membranes replaced and the steam drum checked, with an expected 20-25 year life extension. This will restore and upgrade the rating of Unit 12 to 225 MW, and will be finished in April 1995.

COAL FEED SYSTEM

The Burshtyn power station has more than thirty (30) suppliers of anthracite coal located in the Ukraine, Donbas, Poland, Lublin, Russia, Kubits, and Kazakstan, so there is considerable variation in fuel characteristics. Generally, the coal has a high volatiles content of about 30%, an ash content of 24-55%, a moisture content of 7-20%, a sulfur content of 1.5-3.7%, and a heating value of 2500-5000 kcal/kg. Because of the importance of this plant for power export, there are two main coal conveyors from reclaim, one to each end of boiler house.

Each of the twelve boilers has two raw coal bunkers which are fed from the tripper belts. Coal from each of the two bunkers is fed on a constant speed conveyor (except Unit 5 which is variable speed) to the ball mills, and the height of a gate on each conveyor can be varied to produce a given volumetric feed rate. Flue gas is fed to the ball mills to dry the coal.

Pulverized coal from each ball mill is transferred to a cyclone separator and then from a pulverized coal bunker through motor driven rotary vane feeders to each of the sixteen (16) burners on a boiler. The speed of these rotary vane feeders can be varied to produce different coal feed rates.

124

NATURAL GAS AND MAZUT FEED SYSTEMS

Natural gas is the startup fuel and is used between 0% and 30% load (60 MW for each unit). Each boiler has two natural gas supply lines, a 0-2000 m^3/hr startup line and a 18-64,000 m^3/hr full flow line. Both lines to all twelve boilers include flowmeters and pressure indicators so that the mass flowrate of natural gas can be determined, but mass flowrate cannot be directly indicated or recorded. However, main gas flow to the power plant is measured and recorded. Because of possible variations in heating value, installation of an on-line calorimeter would account for errors in fuel gas delivery by measuring and recording Kcal/Nm^3, Sp. gr. and Wobbe index. Accurate heat input to individual boilers can be derived from this data.

Mazut is an emergency backup fuel. It is unloaded from 12 rail cars at a time to underground concrete tanks, then pumped to and stored in four (4) 10,000 m^3, (2) 2,000 m^3, and (2) 1,000 m^3 storage tanks. At present, tank level cannot be determined accurately.

Mazut is supplied to all of the boilers at 130°C and about 20 atm in a recirculating piping system. The oil lines have thick plate orifices and DP cells, and the flow meters do not work because the DP taps become plugged and tar solids build up on the orifice plates. Because these boilers burn up to 20% mazut, more accurate non-invasive type flow elements such as Coriolis mass flow meters must be installed for monitoring and controlling fuel input. Each boiler has a 159 mm diameter 0-20 T/H mazut supply line and a 66 mm diameter 0-10 T/H mazut return line.

COMBUSTION CONTROLS

Combustion control is remote manual from a central control room. Operators can adjust gas control valve position, mazut control valve position or rotary vane coal feeder speed so that the quantity of steam is sufficient to maintain turbine load. Operators can also adjust FD and ID fan dampers based on absolute pressure in a furnace. The existing 0_2 analyzers of Russian design and manufacturer require frequent maintenance and calibration. Flue gas samples are drawn from the backpass after the superheater and before the first stage reheater where pressure is slightly negative, temperature about 550°C +/-. The sample line is about 108 mm dia. and about 70 m long. Although these analyzers are functional, they are subject to drift and significant lag time as well as inaccurate readings due to air in-leakage. This results in less than optimum control of excess air for efficient combustion which results in waste of fuel.

ENVIRONMENTAL MONITORING

Downwind dispersion concentrations of ash, NO_x, SO_2, CO_2 are checked once per month by power plant laboratory at 2.5, 5.0, 8.0 and 10 Km. The government district center sanitary laboratory in L'VIV makes random tests when plant is at full load.

CONDENSER COOLING WATER

Condenser cooling water is taken from an artificial lake which was created by damming a river at the same time the plant was constructed. The lake is used as a fish farm and chemicals cannot be used to maintain condenser cleanliness. Therefore, condenser fouling with $CaCO_3$, $MgCO_3$ and organics is a significant problem.

Each condenser is cleaned twice per year and the average deposit thickness at the time of a cleaning is 3-4 mm. At the time of a condenser cleaning, there is a loss of condenser vacuum from 0.036 kg/cm^2 to 0.039 kg/cm^2 absolute pressure which causes a 5 MW loss in generator output. Two condensers have Ukrainian design ball cleaning systems which were installed in 1990.

BOILER MAKEUP WATER AND CITY WATER TREATMENT

Lake water makeup is heated and sent to four (4) 150 T/H clarifiers and six (6) 3.0 meter diameter anthracite filters. From that point, water is sent to the city hot water district heating system softeners and to the boiler makeup water demineralizer. City water demand is 300 T/H and boiler makeup water demand is 240 T/H, and these two flows should be within the design rating of the equipment. However, the ion exchange material in the demineralizer is in such poor condition that 100 T/H are consumed in regenerating it. Also, the clarifiers are overloaded, suspended solids are overflowing, and large quantities of water are needed to backwash the filters.

As a result of these conditions, the plant can meet a demand of 240 T/H for boiler feedwater, but can only supply 200 T/H to the city. The quality of city water is also not good due to high bacteria count. Another result of these conditions is high consumption of sulfuric acid and caustic soda for demineralizer regenerations.

DISTRICT HEATING

Steam is extracted from each turbine IP Cylinder to supply the district hot water heating of the nearby city and greenhouses.

REHABILITATION PLANS

IMPRESSARIO AGRUPADOS, an engineering consulting firm from Spain, conducted a major rehabilitation study in 1993 for EBRD. They evaluated seven alternatives for rehabilitation, including rebuilding boilers and replacing turbines with upgraded 225 MW machines, adding scrubbers, precipitators, replacing boilers with circulating fluidized bed (CFB) boilers, and gas turbine combined cycle repowering.

The station is very interested in learning more about CFB technology as a solution to the problems resulting from poor coal - SO_2, NO_x, and high maintenance on the old Taganrog

126

PC boilers.

They are also interested in western technology for instrumentation and control and want to upgrade the automation on the rehabilitated Unit 12 as a demonstration project. Experience gained from application of the Programmer Logic Controllers (PLCs) to Unit 12 would be applied to the 1995 reconstruction of Units 11 and 7.

A list of priority instruments was provided itemizing as a minimum primary field instruments (transmitters, etc.) which are presently needed for Unit 12.

They are planning to add one or two gas fired peaker boilers to meet additional hot water district heating demand from city.

Power plant design work is being done by Ukraine Teploelectroproject, L'VIV Research Institute and Transmission design is being done by Electrosetproject in L'VIV.

MANAGEMENT CAPABILITIES

The power station management gathers detailed information and performance data on all aspects of the equipment operation and maintenance. Therefore, data on gas and mazut fuel consumption, gross and net KW output, steam and hot water (gcal heat) for monthly (heating periods) and annual basis is easily obtained. This data will be used for comparing plant performance audit before and after implementation of "no cost - low cost" efficiency improvement equipment and procedures to improve combustion efficiency of the plant.

The plant personnel are very knowledgeable and cooperative. They are aware of equipment and instrument deficiencies and the need for upgrading and applying western technology for improving combustion efficiency of the boilers.

ATTACHMENT 1

BURSHTYN CHP PLANT

DESIGN COAL ANALYSIS (200 MW)

TAGANROG T-TYPE TP100 BOILERS

As	=	36.0%
C	=	40.7%
O_2	=	6.2%
H_2	=	2.2%
S	=	2.5%
N	=	0.9%
H_2O	=	11.0%
Volatile	=	38.6%
Q	=	3800 Kcal/Kg

PRESENT COAL ANALYSIS VARIATIONS (170 MW)

One Million Ton Storage, 30 Sources of Supply

	Minimum	Average	Maximum
Moisture	7%	12%	20%
Ash	24%	35%	55%
Kcal/Kg	2500	3200	5000
Sulfur	1.5%	2.4%	3.7%
Volatiles	30%	30%	42%
Holdup time, hrs	1 Hr	2 Hrs	3 Hrs

BOILERS PERFORMANCE

BURSHTYN CHP PLANT

	Tagaurog	Air Heaters	Design Efficiency	Present Efficiency
Units 1 - 7	TP-100	4 - Ljungstrom air heaters/ boiler	90%	87%
		Units 1, 4 & 5 reconstructed with pipe air heaters		
Units 8 - 12	TP-100A	Pipe air heaters	91%	89%

Note: Design excess air less than 40% with 5000 Kcal/Kg coal
Now excess air is 55 to 80%

ATTACHMENT 2

D \HALLBERG\CROSMAN3

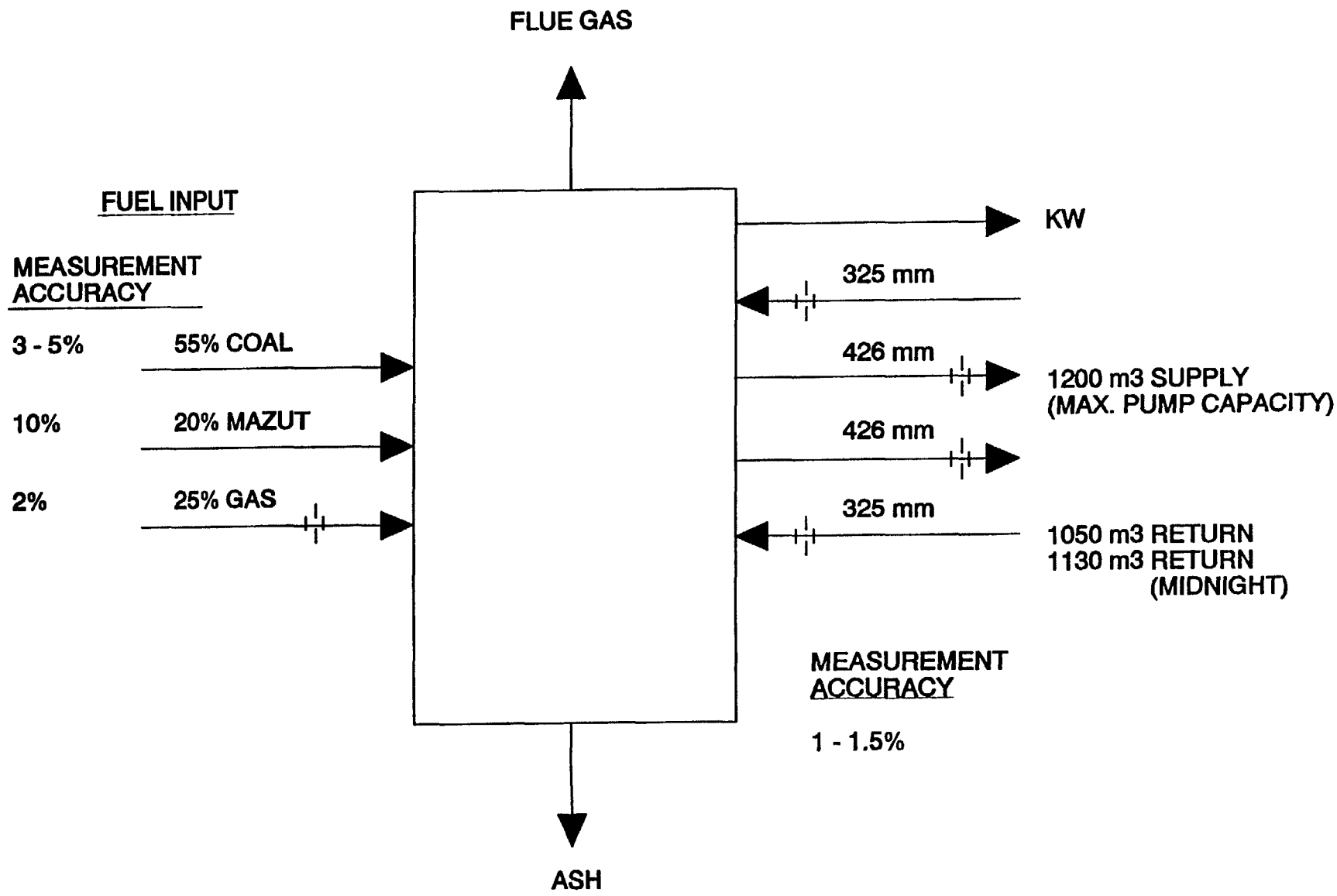

BURSHTYN CHP PLANT

ATTACHMENT 3

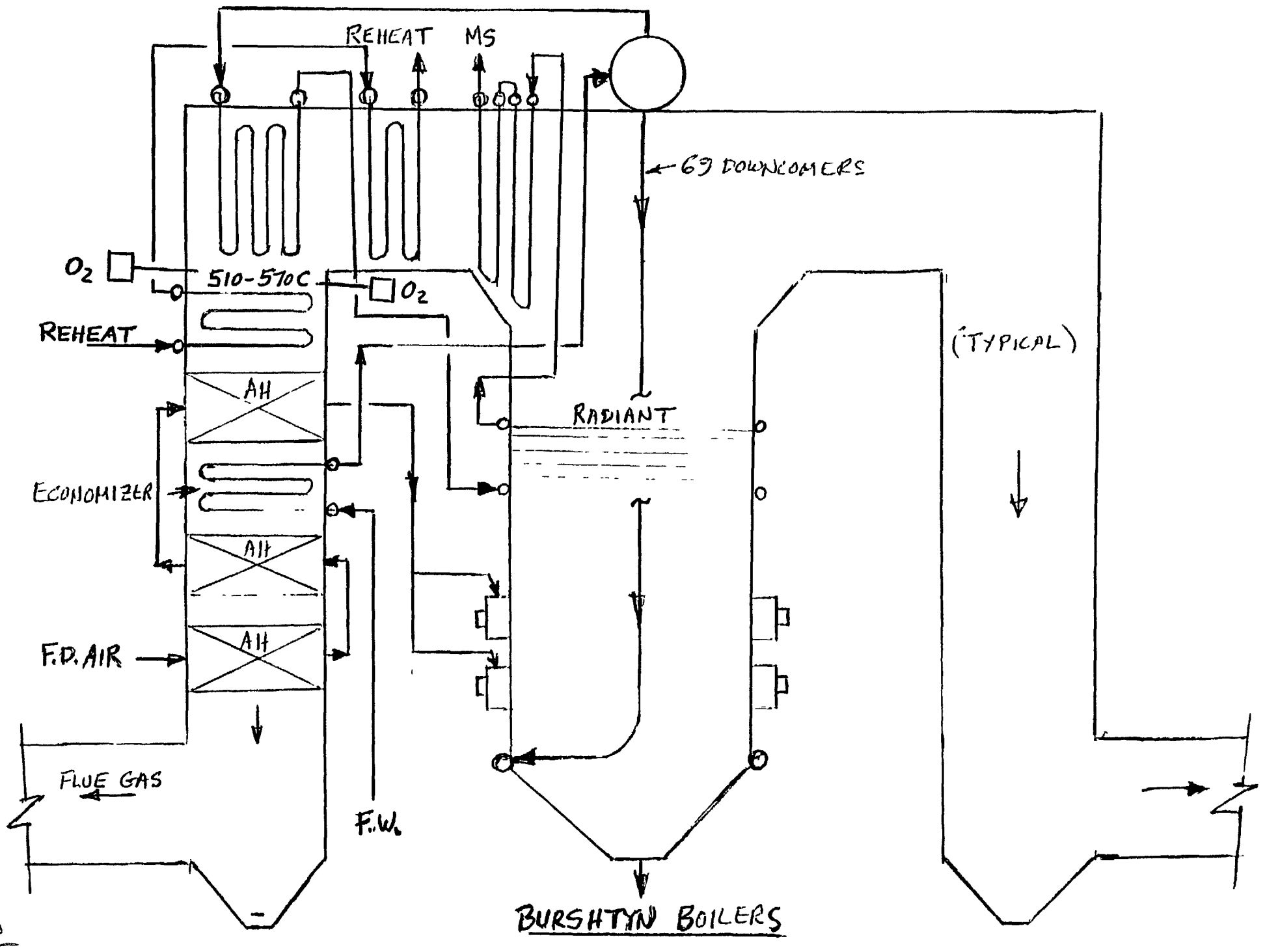

ATTACHMENT 4

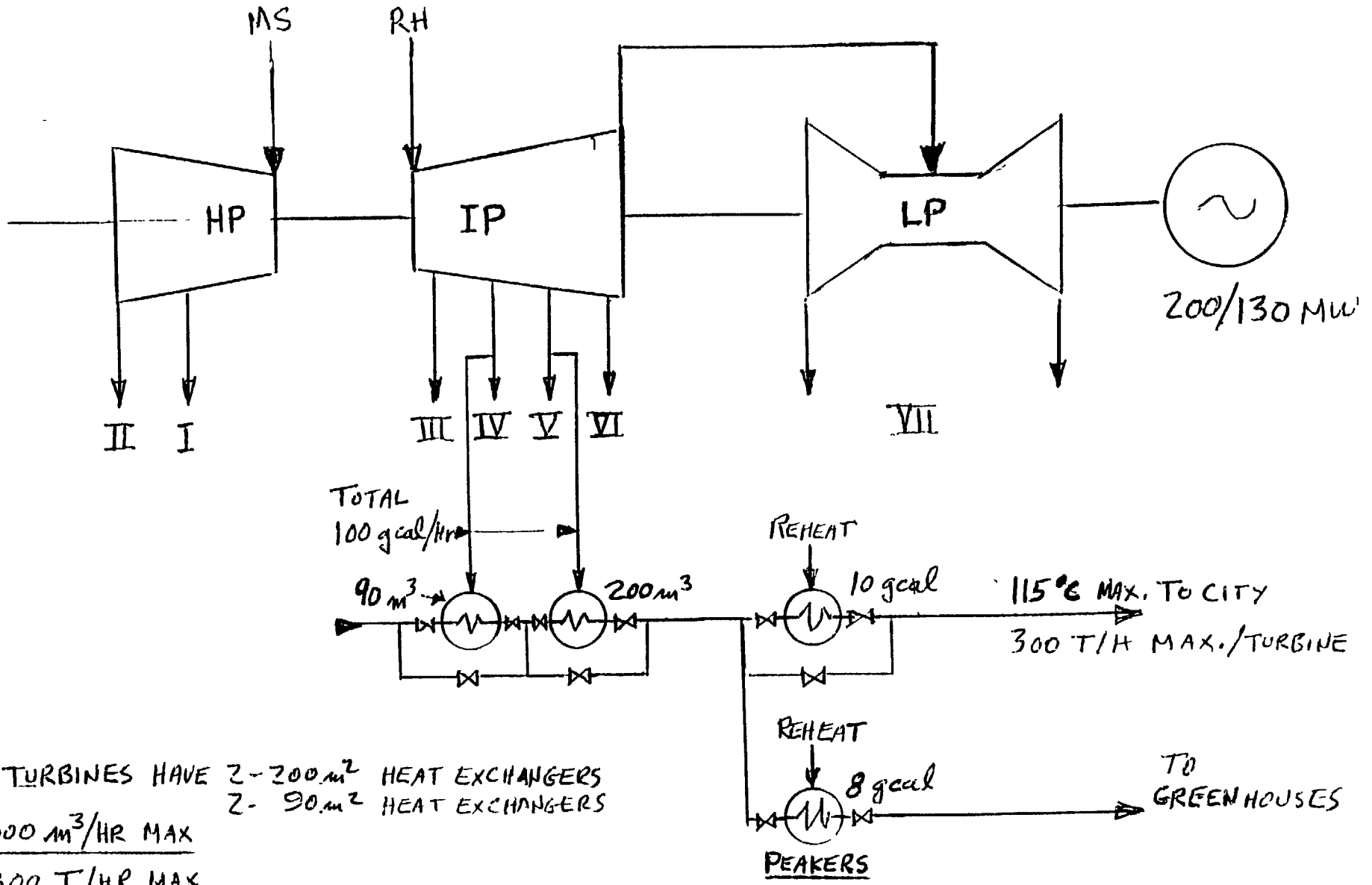

11 TURBINES HAVE 2-200 m² HEAT EXCHANGERS
2- 90 m² HEAT EXCHANGERS

300 m³/HR MAX

3300 T/HR MAX

1200 T/HR MAX PUMP CAPACITY

K-200-130-1

BURSHTYN CHP TURBINES

ATTACHMENT 5

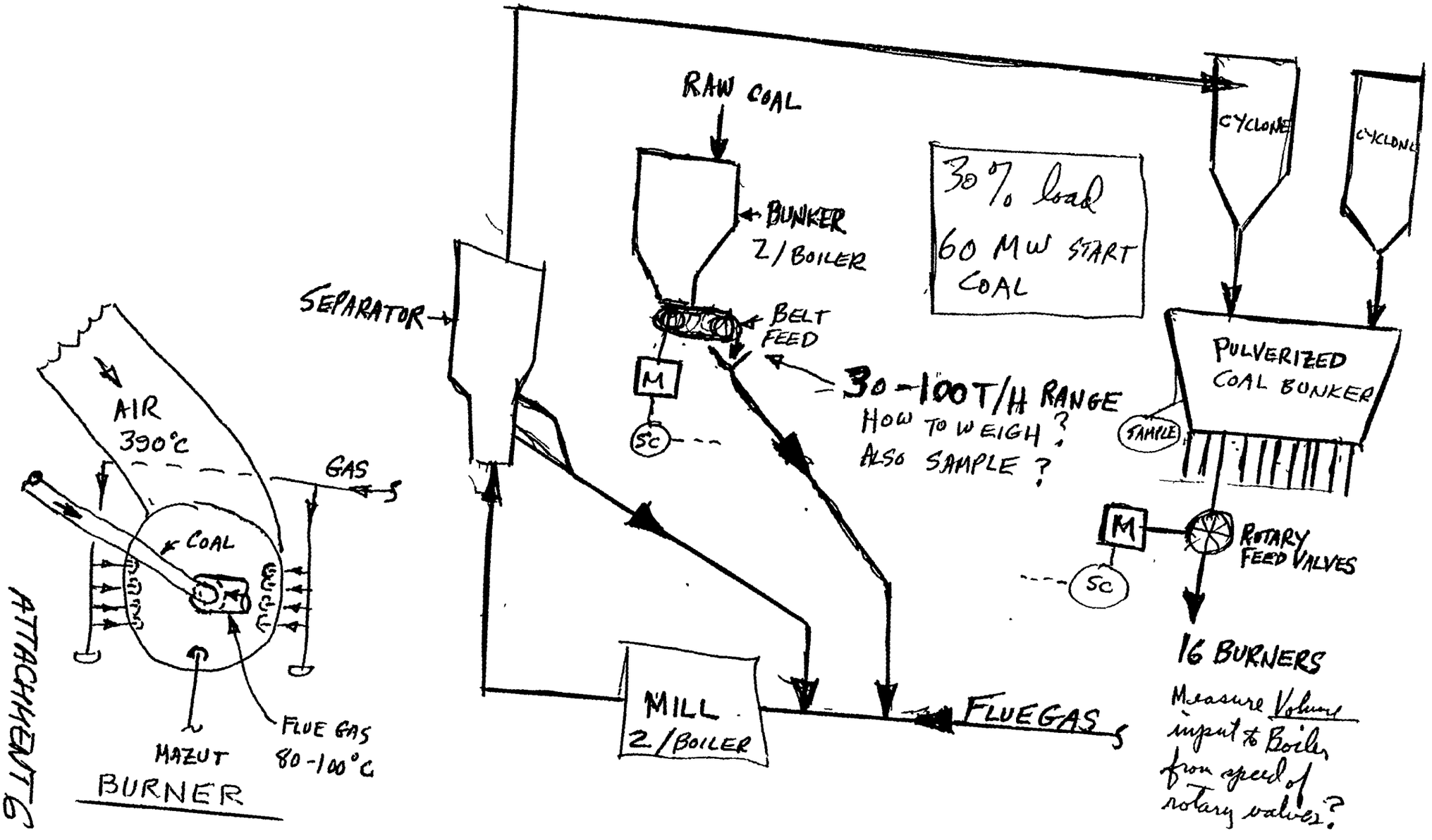

ATTACHMENT 6

BURSHTYN Sat 8 October 1994

ATTACHMENT 7

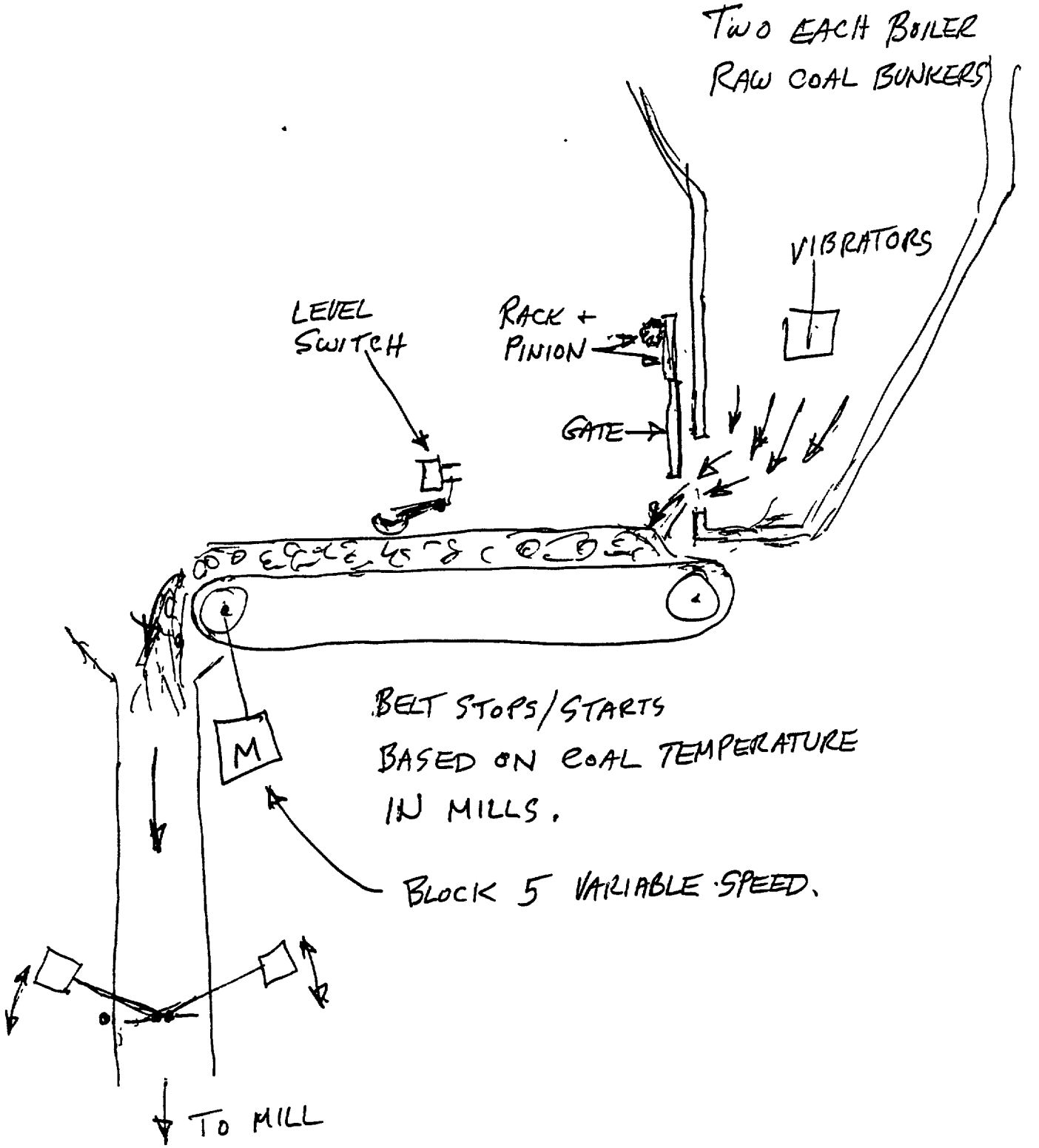

BURSHTYN

MON 10 OCT 1994

BURSHTYN
SHUTDOWN
SCHEDULE

"ЗАТВЕРДЖУЮ"
Головний інженер БуДРЕС
Здановський В.Г.
22 червня 1994р.

ПОПЕРЕДНІЙ ГРАФІК
ремонтів енергоблоків Бурштинської ДРЕС на 1995 рік.

	Від рем	JAN січень	FEB лютий	MAR березень	APR квітень	MAY травень	JUNE червень	JULY липень	AUG серпень	SEP вересень	OCT жовтень	NOV листопад	DEC грудень
1	П		DATES					10 — 22					
2	С		13 —	— 14									
3	К П	—	— 10									6 —	— 18
4	С								28 —	— 25			
5	П					8 —	— 21						
6	С						5 —	— 3					
7	К			13 —	RECONSTRUCTION					— 14			
8	П										2 —	— 14	
9	П										23 —	— 4	
10	П				10 —	— 22							
11	К							31 —		RECONSTRUCTION			
12	П											27 —	— 9

Заступник головного інженера Домрян М.М. Начальник ВПР Гргнчук Е.К.

ATTACHMENT 8

ATTACHMENT 9

PRIORITY LIST OF INSTRUMENTS

П Е Р Е Ч Е Н Ь

автоматических регуляторов блоков 200 МВт
Бурштынской ГРЭС
BURSHTYN

№ п/п	Наименование регулятора	Наименование импульсов	К-во сигналов	Тип выходного сигнала
I	2	3	4	5
I.	Регулятор питания № I	I. Расход питательной воды 2. Расход острого пара 3. Уровень в барабане	3	0÷5 мА
2.	Регулятор питания № 2	I. Расход питательной воды 2. Расход острого пара 3. Уровень в барабане	3	0÷5 мА
3.	Регулятор топлива (на угле)	I. Давление острого пара в перемычке перед турбиной 2. Сигнал обратной связи от СБР 3. Корекция по О2	5	0÷5 мА
4.	Регулятор топлива (на газе)	I. Давление острого пара в перемычке перед турбиной 2. Расход газа на котел 3. Давление в барабане котла	3	0-5 мА
5.	Регулятор разрежения в топке котла	I. Разрежение в топке котла 2. Сигнал обратной связи основного регулятора 3. Сигнал обратной связи следящего регулятора	3	0-5 мА

136

I	2	3	4	5
6.	Регулятор воздуха	I. Сигнал по перепаду воздуха "калорифер - II ступень воздухо - подогревателя" 2. Сигнал по расходу острого пара 3. Сигнал обратной связи основного регулятора 4. Сигнал обратной связи следящего регулятора 5. Коррекция по О2.	9	0÷5 мА
7.	Регулятор температуры пара ШШ; I-IУ потоки	I. Сигнал по температуре пара соответствующего потока (I÷IУ) до впрыска 2. Сигнал по скорости изменения температуры за впрыском	8	0÷5 мА
8.	Регулятор температуры пара промперегрева, I÷IУ потоки	I. Сигнал по температуре пара соответствующего потока (I÷IУ) 2. Сигнал по скорости изменения температуры за впрыском.	8	0÷5 мА
9.	Регулятор непрерывной продувки котла	I. Сигнал по расходу острого пара 2. Сигнал по расходу продувочной воды	2	0÷5 мА
10.	Регулятор ВКШ	I. Сигнал по давлению в коллекторе пара на горелки котла	1	0÷5 мА
11.	Регулятор фосфатирования	1. Сигнал по pH котловой воды	1	0-5 мА

137

1	2	3	4	5
12.	Регулятор уровня в ПВД-5	1. Сигнал по уровню в ПВД-5 2. Сигнал обратной связи	2	0÷5 мА
13.	Регулятор уровня в ПВД-6	1. Уровень в ПВД-6 2. Сигнал обратной связи по положению клапана	2	0÷5 мА
14.	Регулятор уровня в ПВД-7	1. Уровень в ПВД-7 2. Сигнал обратной связи по положению РО	2	0÷5мА
15.	Регулятор уровня в ПНД-4	1. Уровень в ПНД-4 2. Обратная связь по положению РО	2	0÷5 мА
16.	Регулятор уровня в ПНД-3	1. Уровень в ПНД 2. Обратная связь по положению РО	2	0÷5 мА
17.	Регулятор уровня в ПНД-2	1. Уровень в ПНД-2 2. Обратная связь по положению РО (в ЛОХ) 3. Обратная связь по положению РО (в конденсатор)	3	0÷5 мА
18.	Регулятор уровня ОПУ (ПН-100)	1. Уровень в ОПУ 2. Обратная связь по положению РО	2	0÷5 мА
19.	Регулятор уровня в конденсаторе	1. Уровень в конденсаторе 2. Обратная связь по положению РО	2	0÷5 мА
20.	Регулятор уровня в деаэраторе 6АТа	1. Уровень в Д-6 ата 2. Обратная связь по положению Ро	2	0÷5 мА

1	2	3	4	5
21.	Регулятор давления пара на уплотнения	1. Давление в коллекторе уплотнений	1	0÷5 мА
22.	Регулятор давления в деаэраторе 6 ата	1. Давление в Д-6ата	1	0÷5 мА
23.	Регулятор давления РОУ-25/10	1. Давление в коллекторе РОУ-25/10	1	0÷5 мА
24.	Регулятор уровня в основном бойлере	1. Уровень в основном бойлере 2. Обратная связь по положению Ро	2	0÷5 мА
25.	Регулятор уровня в пиковом бойлере	1. Уровень в пиковом бойлере 2. Обратная связь по положению РО	2	0÷5 мА
26.	Регулятор температуры сетевой воды	1. Температура сетевой воды 2. Температура окружающего воздуха	2	0÷5 мА
		ИТОГО:	73	

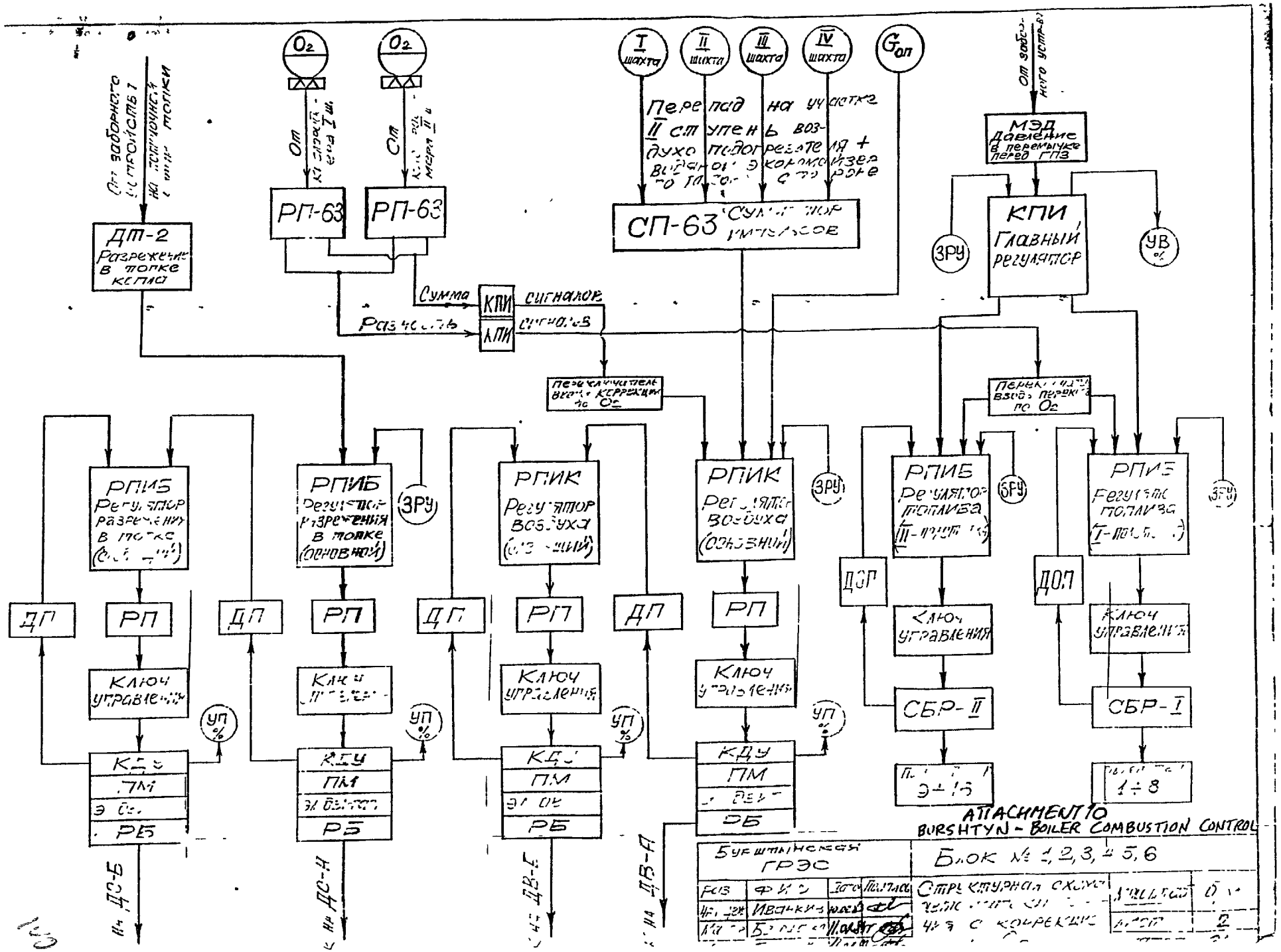
ДТ-2
Разрежение в топке котла
РП-63
РП-63
Сумма
Разность
КПИ
КПИ
сигналов
СП-63
Переключатель входа коррекции по O_2
РПИБ
Регулятор разрежения в топке (основной)
РПИБ
Регулятор разрежения в топке
РПИК
Регулятор воздуха
РПИК
Регулятор воздуха (основной)
РПИБ
Регулятор топлива
РПИБ
Регулятор топлива
МЭД
Давление в перемычке перед ГПЗ
КПИ
Главный регулятор
ЗРУ
УВ %
ДП
РП
Ключ управления
УП %
КДУ
ПМ
РБ
ДОП
СБР-II
СБР-I
Э ÷ 15
1 ÷ 8
ДС-Б
ДС-А
ДВ-Б
ДВ-А
Бурштынская ГРЭС
Блок № 1, 2, 3, 4, 5, 6
Структурная схема
ATTACHMENT 10
BURSHTYN - BOILER COMBUSTION CONTROL

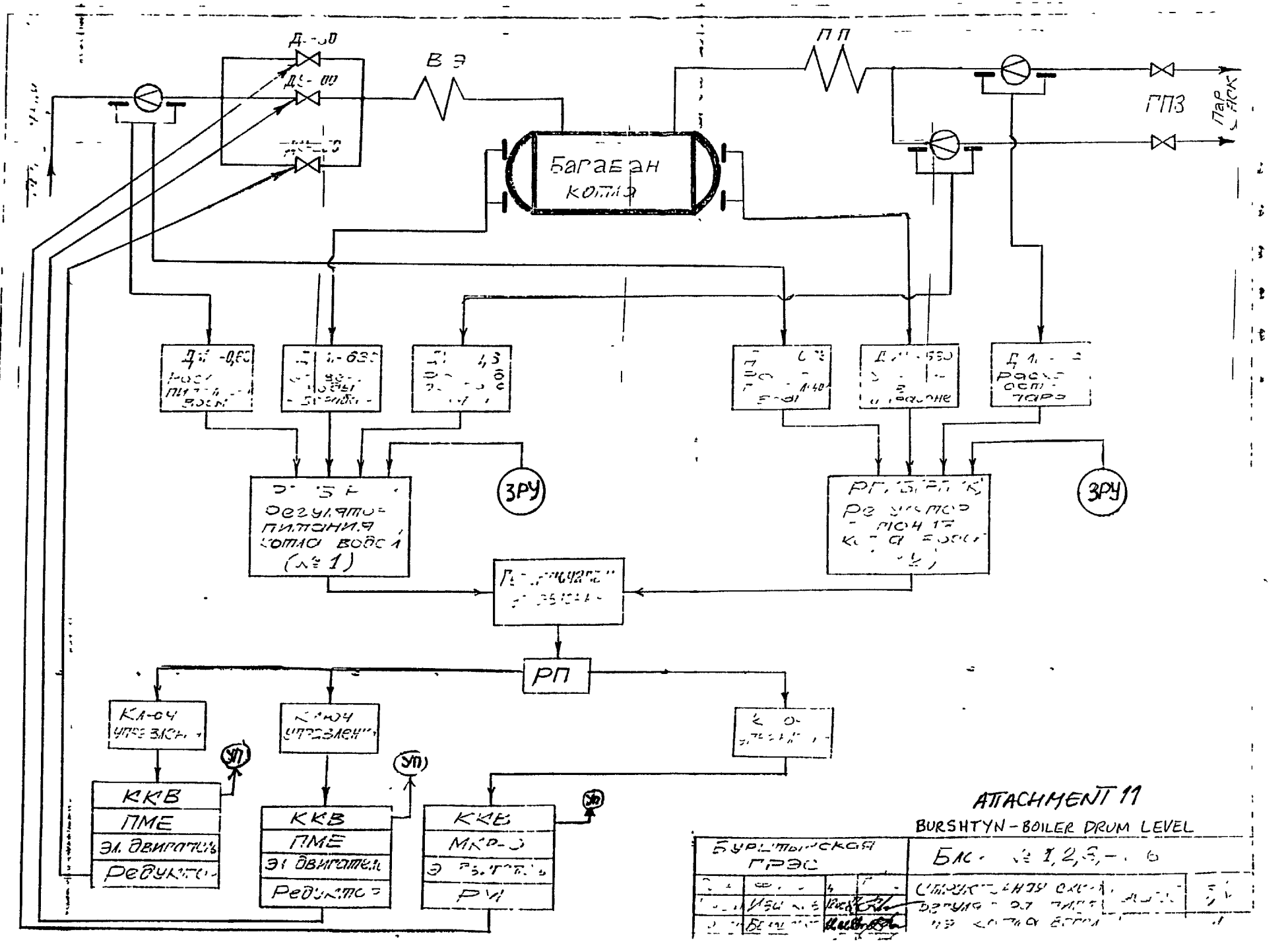

ATTACHMENT 11

BURSHTYN-BOILER DRUM LEVEL

Бурштынская ГРЭС		Блок № 1,2,3,-6	
Изм.	Лист	Подпись	Дата

BEST AVAILABLE COPY

BEST AVAILABLE COPY

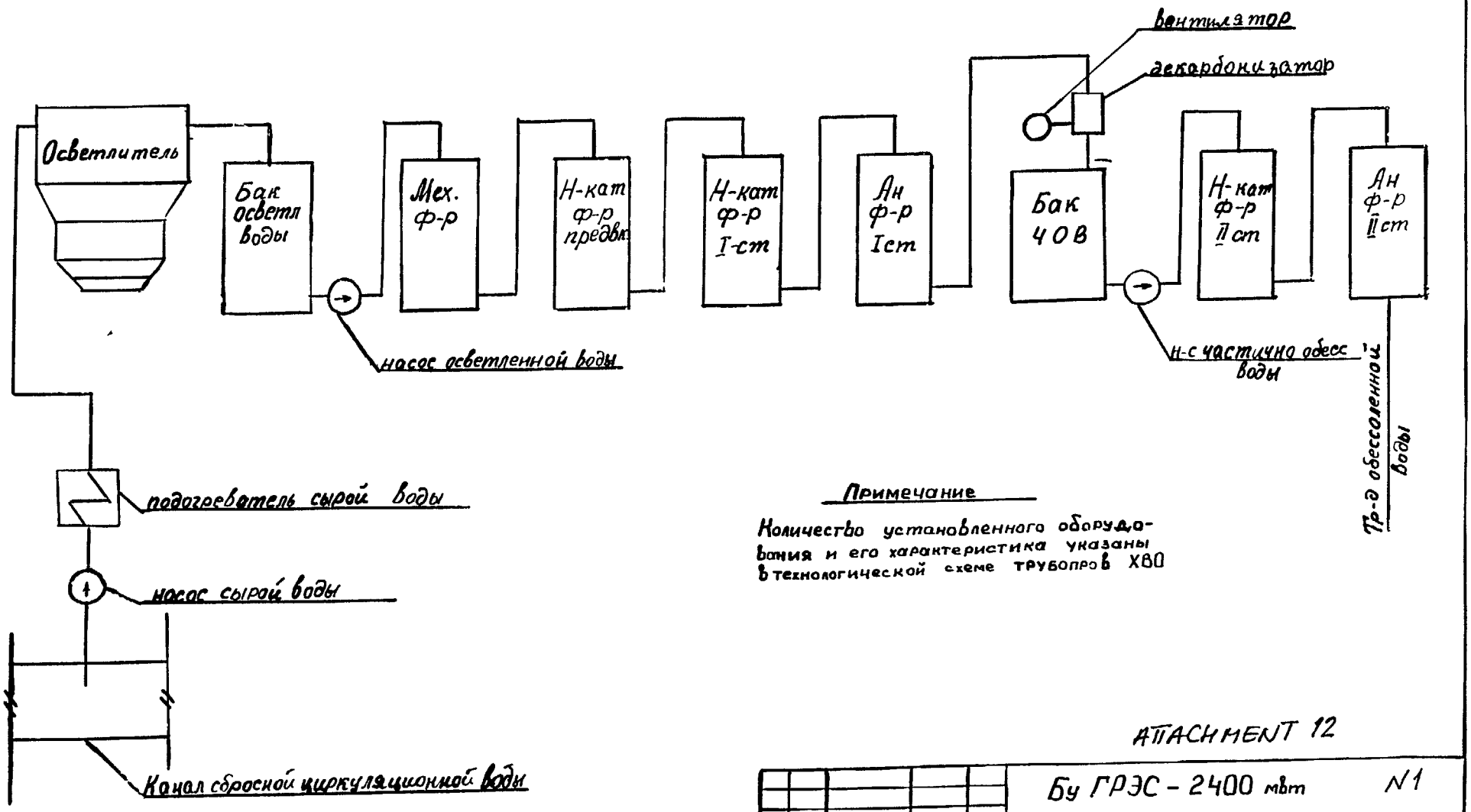

Примечание

Количество установленного оборудования и его характеристика указаны в технологической схеме трубопров ХВО

ATTACHMENT 12

Изм	Лист	N докум.	Подпись	Дата	Бу ГРЭС - 2400 мвт N1
Разраб	Шварав				ХВО производительность 250 т/час
Нач. цех	Фалк				
Нач ПТО					Принципиальная схема обессоливающей установки
Г. инжен					Бу ГРЭС ПЭО „Львовэнерго"

142

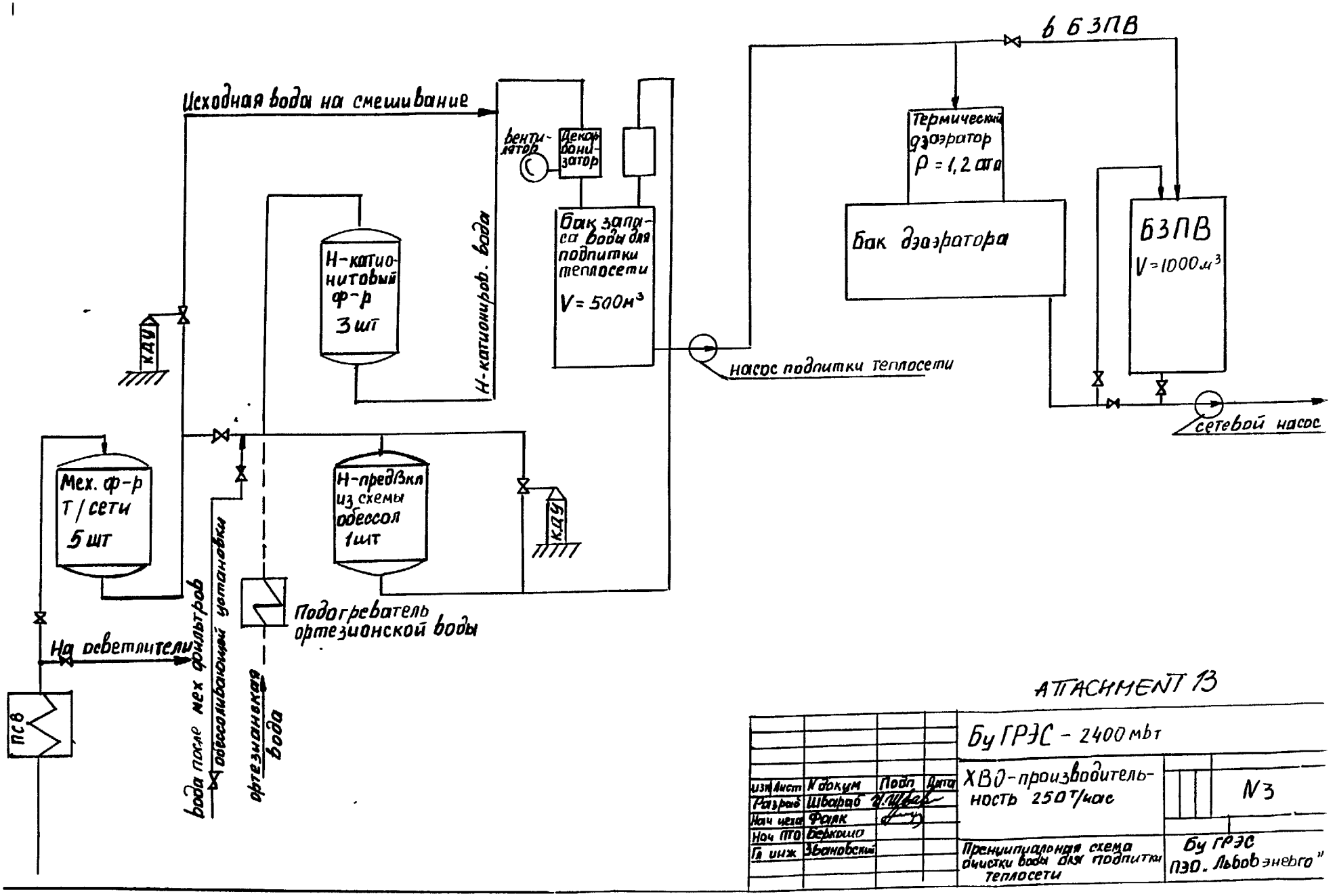

ATTACHMENT 13

				БуГРЭС – 2400 мвт	
Изм	Лист	N докум	Подп	Дата	ХВО-производительность 250 т/час	N3
Разраб	Шварцб				
Нач цеха	Фаяк				
Нач ПТО	Берковцо				
Гл инж	Звановский				Принципиальная схема очистки воды для подпитки теплосети	БуГРЭС ПЭО. Львовэнерго"

TRIP REPORT

PLANT AUDIT VISITS

ODESSA, SIMFEROLPOL, KRIVOI ROG AND BURSHTYN

TEAM NO. 2

UKRAINE

Prepared by: P. Gupta 4/7/95
for John E. Hallberg, P.E./Date

Prem Gupta 4/7/95
Prem Gupta/Date

April, 1995

Burns and Roe Enterprises, Inc.
Oradell, New Jersey 07649

5906-01/02A/TRIP/4/7/95

144

TRIP REPORT

1.1 Introduction

USAID/ENI retained Burns and Roe Enterprises, Inc. (BREI) to perform plant audit visits to seven Ukrainian Thermal Power Plants (TES).

The objective of these audit visits is to improve the combustion efficiency of the Ukrainian Power Plants.

Burns and roe performed the plant audit visits during a Feb 6--Mar 11 trip to the Ukraine in accordance with the Delivery Order objectives. The following report describes the activities of Team #2 (John E. Hallberg, P.E. and Prem Gupta), which visited Odessa CHP plant, Simferopol CHP plant, Krivoi Rog TPP and Burshtyn TPP. A report describing the activities of Team #1 (Selisett Corban, P.E. and George Keller, P.E.) which visited Kourakhovska, Uglegorsk and Zmiev TES was issued separately.

1.2 Work Plan

The following work was planned for each plant audit visit:

- Perform introduction and information exchange with the plant management.
- Discuss and present scope of the work.
- Identify personnel to be assigned for hands-on audit training.
- Provide training and assistance to the team selected for the use of the demonstration portable instrumentation.
- Perform audit tests.
- Turn over the demonstration portable instrumentation to the plant management and sign the papers.
- Determine best location for installing stationary instruments.
- Determine best location for installing receiver instruments.
- Define process and environmental conditions as well as length of the cable runs.

145

1.3 Trip Report and Findings

1.3.1 Mon. and Tue., Feb. 6-7, 1995 - Travel to Kiev.

Feb. 8 through Feb . 15, 1995 - In Kiev.

The following activities took place during this time:

- Meetings and introductions at the office of USAID/Ukraine Mission with Dr. Osborn and Andrei Parinov of USAID/KIEV.
- Meetings and introductions at the office of IDEA/KIEV with Darian Daichok and his staff.
- Arrangements for expediting delivery of USAID equipment from USA to Kiev.
- Arrangements for custom clearance.
- Arrangements for delivery of USAID equipment to the office of IDEA/KIEV
- Arrangements for safekeeping of USAID equipment.
- Inspection and check-out of the arrived USAID equipment.
- Powering up and installation of the software programs for seven TI computers.
- Dry run with nine portable analyzers.
- Local procurement of the missing accessories.
- Arrangements for reliable vehicles, translators and safe travel in Ukraine.

1.3.2 Thurs. Feb. 16, 1995 - Travel to Odessaenergo - Odessa CHP Plant

Feb. 17 through Feb. 21, 1995 - In Odessa CHP Plant

On Feb. 7, we went to the plant with messrs Andrew Parinov (USAID), Andryi Kononov and Vitali Plotnikov (IDEA) and met with George Vukozich, the plant director. We worked in the directors office setting up the equipment, demonstrating its use and discussing the program for combustion efficiency.

On Feb. 18 we spent some time letting the two selected engineers practice setting up the Enerac Combustion Analyzer and going through the functions. We then went to the boiler house to run some tests. We set up at the crossover to the convection pass near the extraction point for the

146

existing oxygen analyzers on power steam boiler 5 - left side. The boilers were burning natural gas. We took two samples on the left side, then took one sample on the right side and got off the boiler when the reading showed carbon monoxide went over range with excess air reading moving between 0 and 2 percent. We were informed that the FD fan on the right side was not operating because of breakdown. The plant immediately reduced load on this boiler.

We ran three tests on the left side of boiler No. 7. The combustion efficiency was fair but could be improved by reducing excess air.

We continued our discussions with the engineers requesting information and data required for our audit report and planning our work for Monday.

On Feb. 20, we met with the Chief of the laboratory, Antonina Ogorodnikova to gather data and information on natural gas and mazut. We obtained test data for 1994 giving monthly average, maximum and minimum heat contents in KJoules/Nm^3 and Kcal/Nm^3 with total gas consumption by month in million Nm^3 and corresponding pricing. It appears that Odessaenergo is being sold short by an average 115 Kcal/Nm^3 by Gasprom. This is why they place such a high priority in obtaining an online recording calorimeter to prove the delivery of gas.

We went to the offsite hot water peaker boilers (3) and steam boilers (2) to look at locations to put in-situ oxygen probes and locate flow meters for mazut and get measurements. the assigned engineers were also made familiar with the operation of "Heat Spy" and Fluke harmonic analyzer.

Past noon we took the combustion analyzer to get more test data on boilers No. 5 and 7, except this time at the I.D. fans. One test was made on each side of boiler No. 7. The oxygen and excess air readings were very high, partly due to air leakage from the air heaters. We discussed the readings with the Chief Engineer of the power plant Oleg Yarotskiy and boiler expert from Odessaenergo Nicolai Marenkov. They agreed to make a slight adjustment to reduce excess air to tune the boiler and we took additional readings. The results were significant, proving to the engineers the value of this instrument for saying fuel.

We returned to the Director's office to gather the remaining information from the plant. We were given copies of boiler control diagrams, dimensions for cable runs for oxygen analyzers, etc. We also were given a letter of receipt for the equipment given to them. The engineers will provide additional test runs for our use.

1.3.3 <u>Tuesday, Feb. 21, 1995</u> - Travel to Krymenergo - Simferopol CHP Plant

<u>Feb. 21 through Feb. 24</u> - In Simferopol CHP Plant

On Feb. 21 evening we arrived at the power plant. The plant Director Alexander Chuprinko and Deputy Director Oleg greeted us. He gave a brief description of the power plant. Andryi Kononov and Vitali Plotnikov met us and made introductions.

147

On Feb. 22, we brought the equipment to the Deputy Director's office. Three representative engineers from Crimenergo as well as many engineers from the power plant staff were present. Andryi Kononov gave an introduction on the purpose of the combustion efficiency program by USAID. We then gave a brief description of our scope of work and handed out copies of the checklist "Improving Combustion Efficiency" in Russian language. We also provided a list of information required for preparing our audit report.

We set up all of the instruments and demonstrated the functions and operation of the Enerac Combustion Analyzer. By noon we brought the analyzer to the boiler house and took tests at right and left side of No. 1 steam boiler near the extraction points for existing oxygen analyzer The two extraction pipes connect to a common shunt pipe to the I.D. fan suction. A single extractive type paramagnetic oxygen analyzer pulls a sample below the intersection of the two pipes. The Enerac indicated the same concentration as the existing analyzer, which was calibrated in January 1995, is installed on the newest boiler and the operators feel confident in its accuracy. A second set of tests were taken at the I.D. fan inlet.

The operators were requested to slightly close the FD fan inlet vane damper to reduce the amount of excess air. This test showed 0.1% increase in boiler efficiency, a 0.8% reduction in oxygen, a 0.4% increase in carbon dioxide and a 8% reduction in excess air.

We made a tour of the turbine building and the gas turbines and returned to the Deputy Director's office to discuss the information we required, and to learn more about the power plant. We were given a description of the plant water systems. They gave us copies of boiler control diagrams.

On Feb. 23, we went to the hot water boilers to take combustion tests. No. 1 boiler was shut down and No. 2 boiler was operating full load on natural gas. These boilers burn only mazut during winter when natural gas is curtailed to supply domestic use. We could not find a good sampling point before the convection backpass, so we took flue gas samples from a sample point ahead of the I.D. fans. The sample pipe was too small to insert the Enerac probe to get stack temperature. A hose was used to connect the probe to the sample pipe. Therefore, the efficiency numbers are not valid. Four tests, two before and two after reducing excess air showed some impressive results. Carbon monoxide can be reduced by further tuning of burner registers and fan dampers to improve turbulence in the furnace.

We opened the rear wall access door on No. 1 boiler at the upper backpass to determine a good location for a single oxygen probe, heater and calibration unit. Two tubes will have to be bumped to make an opening for the oxygen probe. The plant engineers didn't have any problem with doing this. Gas temperature is about 800C.
We obtained sizes, temperatures and flow rates for mazut flow meters. There are four hot water supply, four hot water return lines to district heating and two industrial steam supply lines with no condensate returns. They do not have any problems measuring these flow rates.

We met with Ludmilla Lavilla, the Chief of the water treatment and chemical laboratory to

discuss analytical instrumentation priorities and specifications for the power plant. Makeup water for the power plant comes from the Simferopol reservoir. The water is lime softened in clarifiers, from which the water flows to two treatment plants consisting of anthracite filters, activated carbon filters and two stages of sodium form cation exchange softeners.

Softened water is supplied to the cooling towers, boilers, and district heating system. They have had serious problems of organic fouling of cation resins due to oil breakthrough from the activated carbon filters. The hydrocarbon carryover goes with the feedwater to the boilers and results in carbonaceous deposits in the superheater tubes, resulting in reduced heat transfer, increased fuel consumption when steam temperature drops, hot spots on tubes and possible tube ruptures. Their most urgent need is to obtain two oil in water analyzers to detect hydrocarbon breakthrough from the two activated carbon trains for cleaning and reactivating the carbon.

Another very high priority instrument need by the power plant is an online natural gas calorimeter to certify the delivery of gas from Gasprom, Russia. We were given data for 1994 of laboratory tests showing the heat content of gas actually delivered being lower on average than the gas heat content the power plant was paying for. Although this analyzer does not contribute directly to reducing energy consumption, it will prove the loss of thousands of dollars each year of energy paid for but not received.

Later we received copies of gas and mazut data for consumption and pricing, and a letter of receipt for the equipment. The engineers said they would use the Enerac combustion analyzer to do tuning of the boilers over the next week and send us the results.

We met with the Chief Engineer of Krimenergo, Alexander P. Opatko . We discussed a broad range of subjects regarding the plans and projects for energy development in the Crimea. He placed major emphasis on the recent Ukraine Presidential Decree for development of alternative energy technologies, which Crimea, like California, has a rich potential. As a result of the extensive drilling program over the past ten years exploring for gas and oil, geothermal resources have been discovered which could provide up to 40% of Crimea heating needs. He is very much interested in our experience in geothermal technology and would like to develop greater U.S. cooperation in engineering, development and equipment. He also would like to learn more about other mature U.S. alternate technologies such as refuse burning, wind power, energy storage and solar.

On Feb. 24, the plant engineers were using the combustion analyzer on their own taking tests and tuning the boilers. We spent the day in discussions with the Deputy Director reviewing the information we received, getting clarifications and translations of some terms.

1.3.4 Saturday, Feb. 25, 1995 - Travel to Dniproenergo-Krivoi Rog Power Plant

We met the Director, Deputy Director, Plant Chief Engineer and the Chief Engineer of Krimeaenergo before departing for Dniproenergo-Krivoi Rog Power Plant. The Chief Engineer of Krimeaenergo again emphasized the hope for future cooperation on alternative energy

technology and requested information, brochures and qualifications.

Feb. 26 Through March 1 - In Krivoi Rog Power Plant

On Feb. 27, we brought the equipment to the power plant and set it up in the archives library. We then went to meet the Director Valeriy Chebotar and the Chief Engineer Vladimer Ludekof and gave a brief introduction and description of the instruments we brought for them and presentation of our scope of work. The Director gave a description of the power plant. The Director and Chief Engineer then came with us to the library to look at the instruments. They then called for specialists to come meet with us.

We first met with Vadim Necrasov, Chief of water treatment and chemical laboratory and Svetlana Kikolionkova, Engineer - chemical laboratory. We discussed boiler water chemistry and fuel analyses and requested data on coal, mazut and natural gas.The most critical need is for online monitoring of oxygen in feedwater and silica (SiO_2) after the demineralizer for makeup to the condensers. Each unit has a condensate polisher. They also expressed a critical need for an online natural gas calorimeter measuring Kcal/Kg and Sp.G. and a laboratory calorimeter for measuring coal and mazut heating value in Kcal/Kg.

We were then introduced to the boiler engineers and electrical engineers who would be responsible for the instruments we brought.

We demonstrated the functions and operation of the Enerac and let the two assigned engineers practice using the instrument. We were given monthly data for 1994 consumption and prices of coal, gas and mazut.

HHV of TP coal, mazut and Russian natural gas was calculated and programmed into the Enerac with the Texas Instrument computer. We then went to No. 5 block right boiler (TPP-210A) to take some tests. We tried to get a sample at the convection backpass (about elev. 26000) where the existing oxygen analyzer extraction point is located. This location is between the backpass and furnace above the three back burners. The engineer tried to insert the probe into a sample port, but it hit something and would not go through.

We went back to No. 5 unit and took four good tests, one each through the center thermocouple insertion point ahead of each regenerative air heater.

During dinner meeting, Dr. Osborne (USAID) asked why the CIS has not used Enerac type analyzer before, to the Director and Chief Engineer. They explained that the former Soviet Union did not have the advanced manufacturing capabilities to make this kind of computerized analyzer. We explained that it is only in the past few years that the state-of-the-art electrochemical specific gas sensors have been developed in the U.S. and Europe and that the Enerac is presently the most advanced U.S. made analyzer which is computer programmable. Up to this time the Orsat flue gas analyzer has been the most accurate method for testing flue gas composition by volume for CO, O_2, CO_2, and N_2 by difference. The disadvantage in it's

use is that it takes a lot of time to set up and use, and the operator has to be experienced and constantly practice in order to get accurate readings.

On March 1, we met with the Chief Engineer, his assistant and the two boiler engineers to discuss the combustion efficiency test results and other items. Mr. Ken Carlson, BRC Project Director from Washington, D.C. was present at this meeting. The Chief Engineer seemed to be impressed at the readings shown on the Enerac printout from the previous afternoon's tests. Considering the quality of coal being burned and less than full load at 225 MW, the test results were good, indicating that the boilers were performing well. He noticed the higher flue gas temperature from the left furnace burning 15% natural gas (323,319C) vs. the right furnace burning 5% natural gas (303,304C). He recognized that improvement in performance can be made because of unburned combustible and carbon monoxide levels, where carbon dioxide levels could increase closer to the ultimate level for perfect combustion. They made several copies of the Enerac printouts for the engineers to have.

We were told that Unit 5 was reconstructed about five years ago. Unit 6 is presently disassembled and undergoing reconstruction after five years of operation. There is a lot of fireside deposits on furnace wall tubes and convection backpass tubes which results in loss of boiler efficiency. There is a lot of concern about ash slagging on the superheaters and reheaters from the different coals they receive, and they would like to get a laboratory instrument for determining ash fusion temperature to determine slagging characteristics and thus have better control over the fuel mix and boiler operation.

Because of a shortage of mazut, they presently use natural gas for flame stabilizing. They presently get coal from Donetsk, Lugansk and Kuznetsk fields. The coal is received at two car dumpers, sent to the fuel yard and mixed with dozers. From the reclaim the coal goes to the mills and it cannot be determined what kind of coal or characteristics goes to the boilers. Up to five times a day the fuel characteristics going to the boilers could change. There is usually about a four hour lead time because of holdup time in hoppers.

They could see the advantages of having nuclear dual gamma ash gage on the coal conveyors going to the boilers. This instrument could give real time readouts of percentage ash and moisture, which would allow the operators to choose the mode of operation of boilers to adjust for changes in moisture, ash content and volatiles. However, they are concerned about the cost, would much prefer to have laboratory instruments to determine proximate analyses (fixed carbon, volatiles, ash, moisture), heating value and ash fusion temperature. If they can register these instruments with the National Standardization Committee, they will be able to test coal deliveries and issue claims to suppliers for deficiencies in quality.

They urgently need an online gas calorimeter because they are being shorted on heat content by Gasprom. Their laboratory calorimeter is not commercial (certified), the tests are not continuous so they cannot make a claim for credits. We were given test results for monthly averages for 1994 as well as gas consumption.

151

We discussed the possibility of installing in-situ zirconium oxide oxygen probes on at least one unit, two furnaces, two per furnace, four required. If so, they would prefer installing at same location as existing extraction points to be able to compare with Russian made extractive type oxygen analyzer. Maintenance, calibration and accuracy for existing analyzers is very good and operators have high confidence in the readings. They would rather see the money spent on other higher priority instruments they need. We discussed the possibility of using infrared (1R) type carbon dioxide analyzers in addition to the existing oxygen analyzers.

We obtained line sizes and design information for specifying sonic flow meters for two supply and two return mazut lines serving the boilers. We talked about the possibility of using the pulverized coal feeders to measure revolutions with counter switches and summing to measure fuel feed to boilers. The engineers think there would be 20-25% error due to wear and spacing of feeder plates. This idea needs to be further explored.

The electrical engineer found the heat spy so useful in the first day of use that the chief engineer would like to obtain a second one. The electrical engineer found some hot spots on generator buses and some hot contacts on switchgear and they were going to immediately take action to do maintenance. Also, he will put the power analyzer to use to look for transmission and switchyard problems and he will run tests on fan and pump motors to check the motor efficiencies and the pump and fans performance.

The chief engineer asked if we knew of analytical instrumentation for performing waveform analysis to determine vibration harmonics in balancing turbine generators. They do not have the technology to balance rotors adequately after overhaul and repairs, and have sustained large economic losses to maintenance and operation from damage to bearings and blading. We said we would get them information on portable Fourier waveform harmonic analyzers and orbit vector plotters with associated computer interface equipment, transducers, fittings, cables, etc.

They also want to learn about U.S. technology for identifying hidden cracks in weld joints in complex shapes and sections in supercritical steam service. They have dye penetrant, mag particle, ultrasonic and X-ray NDT, but their X-ray equipment does not have the needed energy level film resolution.

For the Enerac combustion analyzer, they said it would be difficult to obtain the necessary specification calibration gases of good quality and would prefer to have the calibration gas kit provided. This is an action item, to determine if these gases can be obtained in Kiev to specification and furnished to the power plants. It is necessary to calibrate the analyzer about every three to four months.

If in-situ oxygen analyzers are provided, it is necessary to furnish S.S. tubing since it is very difficult to obtain. They also need the necessary lengths of twisted wire, and interconnecting cables.

152

1.3.5 Thursday, March 2 - travel to Lvivenergo - Burshtyn Power Plant

March 3 through March 7 - In Burshtyn Power Plant

On March 3, we met with the Chief Engineer of the Power Plant. The chief engineer then called in a group of engineers and specialists. We presented our plan and explained the scope of work. We then had all the equipment brought into the chief engineer's office and we set it up and showed it to the specialists.

At noon we met Dr. Osborne and Andrew Parinov (USAID), Darian Diachok, and Andrei Kononov (IDEA) for a few minutes to give a status on successes of the three previous plant visits.

We trained the two assigned boiler engineers for operation of the Enerac. We asked for analyses of the coals being burnt in the plant.

On March 4, we met with Orest Daniluk, Deputy Director. He said one of their biggest problems is losing their technical specialists. Many of the engineers have gone on to work in foreign countries or gone into positions in ministries or government. The present Director in the Ministry of Energy Vilen Semenuk was formerly Chief Engineer at Burshtyn and the present Chief Engineer of Lvivenergo Stephan Melnir was also Chief Engineer at Burshtyn.

On March 6, we were given the analysis for Polsky coal. We calculated the higher heating value (HHV) and programmed the Enerac. We then went to Unit (block) No. 4 to run tests. These units have the dual block Taganrog TP-100 (two boilers per turbine) T-type boilers. We took four flue gas samples at the same locations where the existing Russian extractive type analyzers are connected. Therefore, the "stack" temperature readings are not correct, resulting in invalid efficiency calculation results. However, the flue gas constituent values are directly measured, except CO_2 which is calculated based on fuel analysis and the measured oxygen content. This 200 MW rated unit was burning about 95% Polsky coal with about 5% gas at a maximum derated output of 165 MW. The Enerac readings for oxygen corresponded very close to the oxygen readings from the existing Russian analyzers.

The operators felt quite confident in the O_2 analyzer readings, however, the instruments have to be routinely maintained and calibrated. We then took flue gas samples at the two I.D. fans to compare reading to see how much leakage there was from the air heaters. This unit had the Ljungstrom regenerative air heaters replaced with tubular air heaters during reconstruction. However, all the readings, including oxygen and excess air, indicated significant air inleakage, probably most from ductwork and precipitator leaks.

We then went to Block 5 boilers and took flue gas samples at the same extraction points as the existing oxygen analyzers. These boilers were burning 60% natural gas and 40% mazut, at 95 MW load and reduced steam pressure and temperature. The oxygen levels were high due to somewhat high excess air. The high oxygen readings correlated with the control room

153

readings from the existing extractive oxygen analyzers.

We met with Nikolai Kobyev, Deputy Chief Engineers for reconstruction and Development, to discuss the priorities for instrumentation needs as identified during previous trip. The same issue about natural gas heat content at other power plants was raised and we were given data for 1994 showing the Gasprom values and Burshtyn laboratory values. The data indicates that they are not receiving the fuel energy that they are paying for. Although an on-line gas calorimeter does not contribute directly to improving "combustion" efficiency, it may be a tool for recording actual gas energy consumption and reduction of payments for imported gas.

We talked about the problem of the existing extractive oxygen analyzers requiring so much maintenance and calibration. Because of a previous discovery that the shunt line from backpass to I.D. fan was filled with acidic sludge, and fouled the analyzers, we suggested to Nickolai that maybe two couplings could be welded on the shunt line bend near the backpass to inject steam to flush the sludge in the pipe by high velocity into the backpass to clear the holes in the pipe, and to the I.D. fan duct connection. They should disconnect the sample hose to analyzer before flushing the line. Nicolai thinks this is a good idea and said they will try this on one boiler. He thinks that instead of buying new in-situ oxygen analyzers, the money can be better spent on more important and useful instruments. They have received four of new improved but similar design analyzers manufactured in Kiev, which will be installed on Unit 3 which is presently under reconstruction.

On March 7, we again met with Nickolai to continue our discussions on priorities of necessary instruments. We talked about a possible way to measure pulverized coal feed from the bunkers to the burners by counting revolutions of the rotory feeders and totalizing electronically since these are volumetric feeders. Since the rotary plates wear over time, the question is of how much the accuracy would deteriorate over time. Nicolai thought this might be a good idea to look into further, and would be a lot less expensive than putting weight transducers on the two belt feeders from the raw coal bunkers to the pulverizers.

Nickolai was the person who during our last trip asked about an ash gauge. We showed him the literature form the three manufacturers of the dual gamma nuclear gauges and the budget pricing. He described their existing sampling and analysis system and procedures.

In 1994 they paid 2.2 billion KRB ($24,000) in fines for emissions based on the delivery analyses of sulfur in coal and mazut and then calculating SO_2 and SO_3 concentrations in mass flow of flue gas based on boiler loads. The calculated results are only educated estimates at best based on the accuracy of sulfur contents variations over time and estimates of the tons of coal burned. They have a Zeigler CEM installed for No. 3 stack (Units 1, 4, 9, 10, 11, 12) which was purchased by the Ministry in U.S.A. and installed by MLV, an Austrian company, and the power plant paid for it. They cannot use it now because they need about $4000 to $6000 to purchase calibration gases and pay for renewal of the service contract. They also have a one year old German manufacture IMR combustion analyzer similar to the Enerac, except conforming to European standards using the Seigert equation. They need a new oxygen sensor,

154

which typically for all electro-chemical oxygen cells last about one year. They also need the special calibration gases and service on the analyzer.

They also placed a high priority on getting better level gauges on four main mazut storage tanks to measure deliveries and consumption of mazut. The present level instruments are pressure transducers near tank bottom, indicating level based on height and density of liquid. The gauges are not very accurate due to variations of density of mazut and water content and plugging of the tank nozzles with crud.

New ultrasonic level instruments would provide accurate level readings, and are not that expensive.

They found the heat spy to be so useful that they would like to obtain a second instrument to be used by their electrical maintenance engineers to locate hot spots in switchgear contacts, transformers, motors and generators. They also asked about vacuum leak detector instrumentation and techniques for identifying and locating condenser vacuum leaks.

1.3.6 On March 8, we left Bursktyn for Kiev. On March 9, debriefing was held with Dr. Osborne, Darian Diachok, Andrew Parinov and Andryi Kononov, and Tom Kerney of the World Bank, to participate in completion of filming of a TV documentary on the USAID and World Bank roles in the Ukraine energy program.

TRIP REPORT

Delivery Order No 6 - Energy Efficiency and Reliability, Ukraine
Subtask 2 3 - Implementation Phase (Follow-up Visit)
July 21 to August 9, 1997

INTRODUCTION

USAID has provided funds for Burns and Roe Enterprises, Inc to procure and supply energy efficiency instruments and perform plant audit visits at seven Ukrainian Thermal Power Plants The objective of these visits has been to improve combustion and boiler efficiencies, improve monitoring and energy management

During February - March of 1995, each plant was provided with an Enerac combustion analyzer, a laptop computer and printer, an infrared thermometer and a Fluke power analyzer

Burns and Roe engineers conducted follow-up visits and training during July 22 - August 16 in Ukraine in accordance with the Delivery Order objectives The following report describes the activities of John E Hallberg, P E and Alexander Filippov who visited Krivoi Rog TPP, Simferopol CHP Plant, Odessa CHP Plant and Burshtyn TPP A report describing the activities of George Keller, P E who visited Zmiev, Uglegorsk and Kourakhovska Power Plants is issued separately.

WORK PLAN

For each power plant

1. Review the steps taken by the plant for implementation of recommendations and assist in completion
2. Provide additional training and assistance on installation and use of the equipment
3. Refine and finalize the audit report and the recommendations for short and long term actions based on follow-up discussions with power plant personnel and minor additional audit work, if necessary
4. Measure actual energy savings based on audit recommendations and equipment installation, if measurements are not possible, estimate and provide the rationale of the method that is used for estimation

TRIP REPORT AND RESULTS

Mon & Tue, July 21-22, 1997 - Travel to Kiev, Ukraine
Wed, July 23, 1997 - Travel to Krivoi Rog (Zelenodolsk)
Thr & Fri, July 24-25, 1997 - In Krivoi/Rog TPP

PERSONS MET DURING MEETINGS

Vladimir F. Soroka - Chief Engineer (new)
Peter Solovey - Chief of Maintenance Department
Rjabokon Nikolay - Deputy Chief of Automation

156

Vladimir Pachura - SeniorMaster, Head of Automation Department
Anatolij Propopenko - Electrical Specialist
Vasily Bokiy - Infrared Thermometer
Andrey Kolobayev - Fluke power analyzer, Ultrasonic flow meter

INSTRUMENTS SUPPLIED TO KRIVOI ROG TPP

Zirtek oxygen analyzers, 4 probes for 2 boilers, 2-two channel analyzers
Panametrics two channel ultrasonic flow meter
Instromet natural gas chromatograph, display unit and accessories
Oxygen cell and consumables for Enerac

DISCUSSION

Of all the personal contacts made in February, 1995, we met only one person, Peter Solovey - Chief of Maintenance Department The former Chief Engineer, Vladimir Luchnikov was promoted two years ago to First Deputy Minister of Energy in Kiev The new Chief Engineer - Vladimer Soroka was promoted from the Boiler Department He was very busy and did not seem to be familiar with the work we were doing

There is a Canadian company at the plant working on "Group Project Implementation", a $260 million World Bank loan for rehabilitation of Units 6, 7 & 8 It was said that they are preparing tenders This firm has installed a satellite system for telephone, fax and E-mail

They find the Enerac combustion analyzer to be very good compared to other instruments However, they do not see any advantages to use it effectively in this plant on the supercritical boilers, as there are no appropriate measuring ports They claim that the instrument is expensive to maintain, requiring calibration every three months, with a calibration gas kit which they do not have Also, the oxygen sensor must be replaced every year They recently received a new sensor, but haven't installed it yet because they cannot calibrate it (supplemental calibration gas kits have been reordered for each plant)

The infrared thermometer is used a lot in the Electrical Department for checking contacts Mechanical technicians use it on generator and turbine where they cannot measure direct It is used for routine maintenance measuring hot spots on bus connections, at distribution substation, on motors, bearings, transformer bushings, insulators, etc They now use the infrared thermometer in place of manual hand test for rotor and stator "hot spots" They also use it on heat exchangers to find scale and sludge build-up in heat exchangers

Sometimes the technical people will not believe the instruments, but will trust their experience or hand or senses An example is for coal mill bearings where many have been destroyed, but the infrared thermometer can find hot spots quickly and save a lot of money It would be very useful for operations to have this instrument, everybody who needs it, instead of one man It would be best for each control room to have one

Last Monday, 21 July, they started using the Panametrics ultrasonic flow meter to measure

157

cooling water flow to condensers. Next they plan to measure boiler feedwater and district heating water flow rates They recognize many opportunities for using this instrument to save energy The most important use is for balancing the district heating demand load

A practical example we observed was to measure the flow rates of 25 cu m/sec through a filter with new media installed The chemists said flow rate would decrease due to increased pressure drop, but there was no way to check it. In a matter of a few minutes, the specialist confirmed the flow rate with the ultrasonic flow meter

Another example is where they plan to check mazut flow to quantify measurement differences and losses This morning they could not account for 80 tonnes of mazut burned in three boilers, how much per boiler and why Was it easier to burn the mazut than poor coal in one of the boilers, or was the coal unusually bad that night?

They requested technical literature on doppler ultrasonic flow meters for use in open channel flow measurements in cooling water flumes

They installed oxygen analyzer probes on the base loaded Unit 1 dual boilers, two probes per boiler with signals to two dual channel analyzers installed in the control room behind the main panel Jerry Harger from Zirtek commissioned the instruments in June and trained the personnel

During startup, one electronic board failed and Zirtek replaced it Out of 8 probes (4 spare), four were damaged, the ceramic broken One analog output for the plotter failed after Jerry Harger left The analog outputs are connected to their strip recorders They plan to move the analyzers (display) to the front panel as operators become confident in readings. The oxygen readings were averaging about 4%, temperature about 700°C Air heater temperature as about 500°C +

Reference air for the probes is temporarily supplied from compressed air cylinders, good for one week The only compressed air available is plant air which is wet and dirty with oil They plan to install a coalescer and filters

Positive advantage of the zirconium oxide probes is that they are "ten times less maintenance" and very stable Two maintenance technicians work full time on the Soviet made paramagnetic oxygen analyzers to repair and adjust them Every morning they have to blow down, clean and adjust them on all the boilers, and whenever operators call them to check on erratic readings

The Instromet Encal Gas Chromatograph was received in May and they had not yet installed it We looked at the instrument in the shop and answered questions about connections They have been studying the Russian language manuals

We went to the natural gas metering substation to look at where they planned to install the

158

chromatograph They believe the control house is too small and want to build a new 3m x 3m brick building, but have no money They are concerned about regulations, safety and maintenance. They will take the sample line off of main before orifice run. They are planning to install display control unit in laboratory. After much discussion, they think they can clean up the control house and install GC in there by August 8.

The employees haven't been paid until today, 25 August, 30% of their December 1996 salary The plant could not even find enough money to buy milk for the kindergarten children. They need money to buy freon for the turbine building overhead crane cab air conditioner, where temperature reaches 120°F

It is hard to get people motivated, even though they are highly skilled and experienced The plant still generates power when they can get enough fuel, and do not get paid for the power It is a catch-22 situation where they know they need modern instruments to measure and analyze fuels to save large sums of money and energy, but no money to even buy spare parts and supplies

We did not get information on results from using the Fluke power analyzer as the specialist was said to be on vacation

Sat, July 26, 1997 - Travel to Simferopol
Sun, July 27, 1997 - Rest and writing notes
Mon and Tues, July 28-29, 1997 - In Simferopol CHP Plant

PERSONS MET DURING MEETINGS:
Anatoliy K Voronovskiy - Chairman of the Board, Director, Krimenergo
Alexander Chuprinko - Director of Simferopol Power Plant
Vladimir Cherkosov - Chief Engineer
Vasily V. Kurinnoy - Worked at all seven power plants
Valery Babichev - Chief of Technical Department (computer expert)
Alexander Dubinets - Chief of Electrical Works
Valery Duzhenko - Chief of Electrical Laboratory
Sergey Kojevnikov - Chief of Boiler and Turbine Works
Alexander Litvinov - Chief of Automatic and Measuring Equipment Department

INSTRUMENTS SUPPLIED TO SIMPEROPOL CHP PLANT
Zirtek oxygen analyzers (2) probes for one boiler, one two-channel analyzer
Panametrics two channel ultrasonic transit time flow meter
Panametrics one channel ultrasonic transit time flow meter
Instromet natural gas chromatograph, display control unit and accessories
Oxygen cell and consumables for Enerac

DISCUSSION
Valery Babiehev - Chief of Technical Department is trying to develop a computerized

159

information system for the plant and would like to combine the data from all instruments into one program He has written a program in C-language for downloading data from the Panametrics He asked where is the program from Panametrics for downloading data to a computer They use the flow meter every day for measuring hot water flow and mazut flow to boilers

They do not have a program diskette for the Enerac S N 11003252. They used to buy reference gases to calibrate instruments in plant, but now calibrate the Enerac and use it to check other instruments But they cannot use it to plot and analyze data on the printer as described in the manual, and wonder if there is special software to make it work We were given a document showing calculation of efficiency and energy savings of about $34,000 during 1995 using the Enerac We were also given a document from the Central Crimean Regional Department of Environmental Protection regarding a dispute in comparison of inspector using coloremetric burettes to test flu gas vs Enerac readings always being lower and a requirement to do parallel tests with the Donorgres Laboratory "TESTO-33" instrument

The Electrical Department has been using the Fluke power analyzer extensively to measure current, voltage and phase angles with very good results They measure voltage on busses, current on current transformers

The accuracy of the Fluke is higher than measuring equipment in the plant for measuring voltage and current They trust the instrument very much and use it to check other measuring instruments When testing phases on a group of transformers at the gas turbines, they found an unbalance They could perform maintenance on the scheme, but the cost would be higher than the energy losses

They used the Fluke to try to find the weak points in boiler feedwater pump motors and identified that stator winding need to be replaced They also discovered that copper rotor bars end connections were weakening, resulting in losses The problem is that these are old 3 KV motors no longer made, as 6 KV is standard

They also found a small 200W unbalance of about 20% at administration building where one phase was overloaded and they corrected it The important lesson is that the Fluke is useful for identifying energy losses

The infrared thermometer Minolta Cyclops is used to check for heat losses from boilers, drum insulation, steam lines, etc They found bad insulation on a stream drum and replaced it They tried to check the accuracy of instrument against a thermocouple and found 40°C difference They do not trust the accuracy, but said they do not have a manual in Russian or table of emissivities We mentioned that the Mikrom manual was translated and should be similar

They used the instrument to find a steam leak under insulation in the main building They

160

were starting a boiler, 370°C, 40 kg/cm^2 and saw there was a problem, valve was steaming, not normal They measured insulation temperature difference near the valve and found a 10 cm crack on weld of 325 x 24 mm pipe

We went to the power plant control room to look at the Instromet Encal gas chromatograph (GC) display mounted in the main panel Above it is mounted a data logger which can input real time heat content from the GC to record total from metered gas flow At present, they input a fixed value of KCal/cu m.

We then went to the gas metering substation to see the GC installation They ran new shielded cable about 3000 ft from GC to control room display control unit They took a sample line from downstream of orifice meter run to control house where GC is mounted on the wall They added a filter in the sample line with silica gel dissicant for removing moisture and crude from gas sample All tubing and wiring is installed, waiting for calibration gases to clear customs in Kiev, so the startup engineer can travel to commission the GC. Their biggest concern is the need for a spare electronics display board Attached is a diagram of the system

We went to look at the installation of oxygen analyzers on one of the two large hot water heating boilers The electronic two-channel analyzer display unit was mounted in the boiler control panel They mounted the probes below the observation ports on backpass of the boilers They made up an extra pair of flange-nozzles and installed them in the second boiler so the probes could be switched to that boiler when operating.

They mounted the reference air control panel between the two boilers with cable and copper air tubing run to both They found a very small air blower-compressor salvaged from an old hydrogen analyzer, which they mounted inside the cabinet

We were provided with a table of consumption, heating values and prices for natural gas and mazut for 1996-1997, attached In-plant cost to produce electricity is 5 3 Kp/KWh (2 91¢/KWh), and Kremenergo sells at 7 11 Kp/KWh (3 91¢/KWh)

Wed, July 30, 1997 - Travel to Odessa
Thr & Fri, July 31-Aug 1, 1997 - In Odessa CHP Plant

PERSONS MET DURING MEETINGS
George Vukovich- Director
Oleg Yarotski - Chief Engineer - Power Plant
Sergey Donchenko - Chief of Instrumentation
Valerie Gurburov - Equipment Engineer
Antonina Ogorodnikova - Chief Chemist

INSTRUMENTS SUPPLIED TO ODESSA CHP PLANT
Zirtek oxygen analyzers, 2 probes for one boiler, 1 two-channel analyzer

161

Instromet natural gas chromatograph, display control unit, accessories

Silica Analyzer	--	In Customs
Conductivity Meter	--	In Customs
pH meter	--	In Customs
Oil in water analyzer	--	In Customs

DISCUSSION

The power plant is in the process of being transferred to Municipal ownership and control, not privatized. The only instruments to pass Customs clearance were the gas chromatograph (GC) and boiler oxygen analyzers The other instruments are on plant territory one month in custody under Customs control They do not know when released

The Enerac, infrared thermometer and Fluke power analyzer are in the custody and being used by the firm "Energo Naladka (Energy Adjustment) Enterprise"

The Enerac was used intensely until February 1996 when the oxygen cell failed They now have a new cell, but no calibration gas kit or instructions They provided a detailed write-up on its use and energy savings (attached).

The Minolta Cyclops infrared thermometer was used to measure boiler and piping insulation, temperatures of bearings, motors, buss connections to 6 KV, 6-110KV contacts, etc. They provided a detailed write-up on its use (attached)

We could not get any information about use of the Fluke power analyzer or results They provided a letter that did not give any real descriptions of its usefulness

We looked at installation of the oxygen probes and reference air cabinet at about 24 m elevation They used an old soft drink dispenser cabinet, modified the compressor for air, added an accumulator tank and filter and mounted the control air cabinet inside it They also found some additional copper tubing from salvage The analyzer display unit is mounted in the main boiler control panel, with a cutout for mounting a strip chart recorder

It was decided to mount the Instromet Encal gas chromatograph in the chemical lab since there is a sample line already installed The GC cabinet is mounted on the wall, display control unit sitting on a desk, and electrical outlets installed No tubing was installed, but can be quickly completed There was a lot of discussion whether the GC should be installed at the gas metering substation

They have a data logging system similar to Simferopol scheme, except they used a Pentium computer for logging

We were provided a list of data for gas and mazut consumption, heat contents and prices

In Plant Cost to Produce	Import Power	Annual Ave. Cost	Avg. Sell
Winter - 3 Kp/KWh (1 65¢)	6 5 Kp/KWh (3 57¢)	6 5 Kp/KWh (3 57¢)	8
Summer - 20 Kp/KWh (10 9¢)	6 5 Kp/KWh (3 57¢)	6 5 Kp/KWh (3 57¢)	8

ODESSA - 31 July 1997

In the result of the computation modes and elimination of the insulation defects carried with application of instruments Enerac + Cyclops, these were achieved economy of fuel in terms of the condition of fuel. (7000 KCal/Kg)

Consumption of Conventional Fuel		Savings
1995	878 tons	0 4%
1996	724 tons	0 4%
1997	222 tons	0 2%

For the period of operation of the gas analyzer Enerac 2000 between March 1995 and December 1996, a brigade team of adjusters and engineers of the Central Research and Technical Department of Odessa Energy Adjustment, there were fulfilled the works that are similar for 9 out of 14 installed boilers

Odessa Heat Power Plant - Mode and ecological and heat and technical tests of the steam boilers KU-1

1 TP-170, Station #5, 6, 7, and 8 adjustments of the furnace mode, ecological and heat and technical tests with optimization of the harmful substances in the coming out smoke output gases

2 TP-47, Station 10 adjustment of the furnace mode, ecological and heat and chemical adjustment with optimization of exhaust of the harmful substances into the atmosphere in the coming out smoke gases

At the boiler of KU-2

1 GM-50, Station 1, 2, 3 adjustment of the furnace mode, ecological, heat and technical adjustment with optimization of the exhausted harmful substances,

At the boilers of the water heating boiler house of Odessa Heat Power Plant.

113

1 PTVM-100, Station 2 - adjustment of the furnace mode, ecological, heat and technical adjustment with optimization of the exhausted harmful substances

At the enterprises of Odessa Heat Supply Network·

1 There were carried out ecological, heat and technical tests of the water heating boilers at the following boiler houses

Severnaya-1 - Northern	Boilers PTVM-50, No 1 and 2 Boilers PTVM-100, No 3 and 4
Yuzhnaya-1 - Southern	Boilers PTVM-50, No 1, 2, 3 and 4
Chuboska -	Boilers KBGM-50, No 3 and 5

Besides on the steam boilers of Odessa Steam Power Plant they regularly carried out work aimed at correcting the mode guidelines after a long term non-operation of the equipment, in case of operating the boilers, on a combined fuel (gas + mazut), determination of the operation characteristics of the boilers on the ground of the results of the gas analysis (leakages along the gas path of boiler) There were also carried out express tests of the boilers before their repair and after repairing to evaluate the fulfilled repair works

CONCLUSIONS

During the period of operation of the instrument Enerac 2000, the specialists from the group for adjustment of the heat and technical equipment of Enterprise Adjustment one can come to the following conclusions

- Operation of the instrument for determination and adjustment of the optimal combustion mode for a set load gives reduction of the working time by 50-60%

- The efficiency of carrying out of adjustment and regulation (controlling) of the furnace process as the boiler is rising on account of reduction of the time for making samples, and it increases the capacity of the boiler by 0 8 - 1 2% due to the precision of the instrument readings

- Work with the instrument Enerac 2000 is of large effect in the work of the operations people of the boilers concerning corrections of the furnace mode when working in the non-stationary modes of the boiler work, as well as it gives a large reduction of time when fulfilling the mode and adjustment and also ecological and heat and technical tests of a boiler with the aim of making the mode guidelines as well as the ecological and heat and technical characteristics of the boiler

Remarks (or comments) (concerning the organization and service maintenance)

- A low life time resource of the oxygen sensor life (1 year)
  Service maintenance is not available
  (they were talking about having a representative in Moscow, but from the standpoint of Ukraine, that is another country abroad, another currency and problem of logistics Should have representative in Kiev or another large city)
- The instrument has not been registered or certified with the State Standards of Ukraine

REVIEW ON FUNCTIONING OF METER CYCLOPS 300AF/300

The instrument is used for precise measurement of the temperatures of surfaces without direct contact with the medium in the range from -50 to 1000°C The adjustment people of the enterprise "Odessa Energo Naladka" used the instrument for the following purposes

1 Measuring temperatures of the outside surfaces of the cover boiler aggregates at Odessa Heat Power Center to determine the heat losses into the surroundings

2 Measuring temperatures of surfaces, insulation of the steam and hot water pipelines for restoring and repairing the heat insulation of the pipelines

3 To check the temperatures of heating the cases of the bearings of the rotating mechanisms and the temperature of heating the motors

4 To check the temperatures of connections of the buss lines in the distributive devices with the voltage of 0 4-6 KV

5 To check the temperature of connections of the buss lines of open distributing devices with the voltages of 6-110 KV, at transforming substations

Usage of the instrument cyclops 300AI/900 resulted in identification of the places of damaging the outside cover of the boilers and insulation of the pipelines Elimination of damaging of the cover and restoration of the pipeline insulation made in due time resulted in reduction of the heat losses into the environment from 0 05-0 15%

Checking of temperatures of the bearings in rotating mechanisms (fans, smoke suckers (I D Fans), pumps, etc) allowed to replace them in due time preventing getting of the equipment out of order

The systematic checking of the temperature of the connections of buss in the distributing devices and at the substations permitted to prevent the emergency situations at the Odessa Heat Power Center

CONCLUSIONS

The instrument is reliable and suitable in operation, it has small overall size Providing availability of a printer, its possible to register the readings

availability of a printer, its possible to register the readings

REMARKS

1 The instrument has not been certified with the State Standards of Ukraine

2 Service maintenance is not available

Sat, August 2, 1997 - Travel to Burshtyn
Sun, August 3, 1997 - Rest and Writing
Mon and Tue, August 4-5, 1997 - In Burshtyn Power Plant

PERSONS MET DURING MEETINGS

Vasyl' Bendasiuk - Director (New)
Igor I Bozenenkow - Deputy Director - Foreign Affairs (Former Director)
Orest Daniluk - Deputy Director - Technical
Nikolay Kobzev - Deputy Chief Engineer for Reconstruction and Development
Gorgory Stepas - Deputy Chief Engineer - Operations
Ivan Berkosha - Chief of Technical Department
Tanasiy Semotyuk - Head of Adjustments Workshop
Mykola Korvotsky - Head of Chemical Workshop - GC
Peter Chopik - Senior Forman Automation Workshop - O_2 Analyzers
Dept of Automatic Control Systems
Michail Zelanovsky - Deputy Chief of Adjustment Dept - Enerac, Infrasec
Yaroslav Pyrihh - Computer Specialist
Nina Kryzhanovskaya - Senior Foreman - Electrical Department

INSTRUMENTS SUPPLIED TO Burshtyn

Zirtek oxygen analyzers, 2 probes for one T-boiler, 1 two-channel analyzer
Panametrics two channel ultrasonic transit time flow meter
Instromet natural gas chromatograph, display control unit and accessories
Oxygen cell and consumables for Enerac

DISCUSSION

There have been significant management changes and financial problems at this power plant which seem to have had a negative effect on employee morale and successful results with USAID energy efficiency and monitoring instrumentation

The new Director, Vasyl' Bendasivk, came from Dobrotvotor APP 900 MW power plant There was a fluidized bed boiler project at that plant which is no longer operating The former Director is now Deputy Director of Foreign Affairs There seems to be a lot of political in-fighting and lack of support for highly skilled and experienced technical specialists wanting to see progressive improvements made

They are in the process of another organizational change in Lvivenergo where 300 new

166

paid December salary

It is difficult for employees to be motivated when last week they received only 20% of their February salary The power that the plant generates for domestic and export consumption is paid for in bartered goods, not cash

About the Enerac combustion analyzer, they asked why the manual has detailed instructions for plotting and emissions analysis, but the instrument says "no function" The built-in printer is supposed to print curves, but it does not work They can only get plots on computer screen by using Enercomp for Windows They had discussions with Uglegorsk power plant about the Enerac Also, the refresh diskette is a 5 25 in floppy, whereas the TI laptop has a 3 5 in drive Enerac S N 11003249 They used it for a while to measure CO_2 and NO_X in flue gas

They also have a German IMR combustion analyzer (1994) similar to Enerac, which also needs an oxygen sensor, calibration gases and service, but no money to purchase

They report that the Zeigler UNICON CEM system installed on stack No 3 several years ago is still non-functional because they need calibration gases The probe in stack is damaged because of lack of use and no maintenance They said $455,000 was wasted They said the amount of fines for emissions has decreased because the number of units operating has decreased Fees (fines?) paid for emissions in 1996

Emissions	Hrvina	
Soot	212,588	
Sulfur Anhydride	459,107	
NO_X	76,352	
CO	4,538	
V_2O_5	404	
	752,989	$413,732

They also have a flue gas analyzer ANALIT-PRIBOR which was manufactured in Kiev It is reported to be a microprocessor type photo sensitive spectrum analyzer measuring CO_2, CO, SO_2, NO_X, NO, NO_2, and having a long life The instrument is not portable, but compact in size and easily moved It was installed on Unit 9 for awhile near I D fan, but removed because it was getting damaged in the dirty atmosphere

The infrared thermometer was used up until six months ago to find problems, but batteries died and they cannot find 2 Hrvina ($1 10) to buy four new ones The electrician used it to check a large "fuse" on a transmission tower which was overheating from a short circuit and could have been a serious safety incident They used it to check insulation and covers on boiler burners They also used it to find and repair insulation on steam lines from boilers They did not seem to be aware of other uses for checking temperatures of motors, bearings, contacts, etc The electricians apparently refused to use it

167

The infrared thermometer was used up until six months ago to find problems, but batteries died and they cannot find 2 Hrvina ($1 10) to buy four new ones The electrician used it to check a large "fuse" on a transmission tower which was overheating from a short circuit and could have been a serious safety incident They used it to check insulation and covers on boiler burners They also used it to find and repair insulation on steam lines from boilers They did not seem to be aware of other uses for checking temperatures of motors, bearings, contacts, etc The electricians apparently refused to use it

They recently received the Panametrics two-channel ultrasonic flow meter and training on how to use it. The technical specialist has studied the manual and plans to use it for measuring mazut

The Fluke power analyzer is being used for measurements only in secondary circuits up to 100V, 0 2, 0 3, 0 5 amp A more suitable application would be in primary circuits It has been useful for preparing current phase diagrams and use in HV switchyard circuits for checking measurements from current and voltage transformers

They know that harmonics from large motors are a serious problem and the Fluke would be a valuable instrument for analyzing, but it is not the responsibility of their department

The Instromet gas chromatograph has not yet been installed because of financial problems, and trying to decide where it should be located They said there is no space in the natural gas metering substation control house, and have decided to remodel a secure room near Unit 2 They have a contract with another organization to install about 50m of sample line from the main gas distribution line to boiler room They will raise walls to ceiling to enclose room and provide insulation They were asked where they will vent sample and calibration gases to atmosphere and where KCal output signal would be integrated with meter station flow, pressure and temperature logging on computer They do not yet know The instrument and accessories are still packed in boxes and it is questionable if equipment will be installed and commissioned by the end of August

The two Zirtek oxygen probes are installed on Unit 3 boiler angled downward above a burner on each side This is not a good location because of the possibility of flame impingement and high temperature and slag damage Zirtek engineer recommended location higher up in radiant section in fire box Recommended temperature range for zirconium oxide cell long term performance is 600 to about 1200°C

The reason probes were installed on Unit 3 is the fuel split is about 90% coal, 5% gas and 5% mazut and burner design results in unstable flame and inefficient combustion During the commissioning test, oxygen was measured at 11-12% and 870-900°C The boiler is presently shut down for repairs

Some of the experts wanted to install probes the same way at all 16 burners Our impression is that they do not want to relocate the probes higher in the furnace

168

but recognition of the creativity and innovation of many talented specialists which can go a long way to help solve problems and improve energy efficiency in many small ways in the Burshtyn power plant

Wed. August 6,1997 - Travel to Kiev
Thur & Fri. August 7-8, 1997 - Kiev meetings, trip report
Sat. August 9, 1997 - Travel to USA

State Committee of the Autonomous Crimean Republic for the Environment and Natural Resources Protection
The Central Crimean Regional Department for Nature Protection

March 12-25 1997

"Krymenergo" GAEK
Ministry for Power Engineering of Ukraine
74, Kievskaya Str.
Account 221902 in "Pzominvest Bank" kRB
MFO 324430, OKPO 00131400

Statement of Checking How the Legislation on Water Protected Facilities is Observed

I, the State Inspector at the Central Crimean Regional Natural Protection Office, Ms I P Shcherbakova, in the presence of the representatives from "Krymenergo" GAEK - Engineer of the Industrial & Technical Department, Ms O Yu Valia-Yeva, Senior Engineer from Simferopol HPP, Ms V N Cherkassova, have carried out checking how the legislation on the water protected facilities is observed at the Heat Power Plant named after V I Lenin, the latter being an independent structural unit within "Krymenergo" GAEK (the provisions on the structural unit of December 1, 1995) The checking has been performed on the ground of the Law of Ukraine "on the natural environment protection" The checking resulted in finding out the following

In 1996, at Simferopol HPP, there was produced

- Power energy - 294,713 MW - h
- Heat energy - 350,976 Gcal
- Reactive energy - 72,724 8 MVar

Between January and February in 1997, there was produced

- Power energy - 57,557 MW - h
- Heat energy - 132,276 Gcal

The consumption of fuel in 1996 was

- Natural gas - 123,336 thousand m^3
- mazut - 9,891 ton

at the average sulfur content of 1 7%

170

In January 1997, there was consumed.

- of the natural gas - 18,812 thousand m^3 at the lowest fuel combustion heat Q = 7,800 KCal/m^3

- of mazut - 0 ton

At the moment of the inspection, there are in operation

- two power boilers - BKZ-160-100FB
- one water heating boiler KVGM-100
- a steam turbine T-34155-90
- a generator at No 3 in the synchronous compensater mode

The gas and turbine plants do not function due to the absence of the fuel

The enterprise was given the developed and approved standards of MAE levels valid until January 1, 1998 Until the same date, there is valid the permission to release the harmful substances into the atmosphere in the amount of 3,893 086 ton/yr (887 286 g/s)

According to the report - 2TP-air in 1996, the exhausts amounted to 761 610 t/yr, including there

- the mazut ash - 4 930 ton/yr,
- sulfur anhydride - 354 930 ton/yr,
- nitrogen dioxide - 401 760 ton/yr

The others include - the mazut ash (4 920 ton/yr)

The standards concerning the maximum admitted exhausts by each boiler when working on mazut set the exhausts of the mazut ash in recalculation on the vanadium pentaoxide The quantity of the given substance is determined by calculation, but in Chapter 2 of the Report 2TP-air is not specified for the given substance

According to an agreement with DONORGRES, there is fulfilled each quarter inventory of the exhausts sources given by each boiler with submitting a statement on the efficiency and the exhausts into the atmosphere due to the data from the reports and the instrumental measurements in 1996 the CO_2 content in the flue gases is absent

At the HPP there are monthly calculated exhausts of the harmful substances with taking into account the values of the sulfur content of the fuel determined by the laboratory of the enterprise, and the same is done concerning its lowest combustion heat

However, there are no records kept in the register books of the exhausts into the atmosphere, nor is kept the register for the exhausts measurements (the forms of the registers were recommended due to "Instructions for organizing control of the exhausts at a HPP" - RD 34 02.306-88) Enerac-2000 was not used by the laboratory of the HPP during 1996 due to the resource of the oxygen analyzer to be over

On March 18, 1997, the laboratory of the State Committee for the Natural Resources and Environment, p20 - function together with the laboratory of the HPP performed parallel taking samples from the operated boiler systems The laboratory of the State Committee used the national production instrument - "Inspector - 1 - Express-Method", the Laboratory of the HPP used "Enerac-2000

The comparison of the results shows discrepancy between the values concerning the exhausts For example, when the steam boilers BKZ-160-FB on No 1 are being operated, the analytical control instrument registers absence of CO in the fuel gas exhausts (Enerac-2000), the express-method "Inspector" determines their presence on the level of 62 5 mg/m, that is within the process requirements and corresponds to the approved maximum admitted exhausts levels

Analysis for the Boiler BKZ-160-100FB at No 3 was not performed by the laboratory of the State Natural Protection Committee due to the mismatching the sample-taking holes

In the exhausts of the water heating boiler KVGM-100 at No 1, measurements with both the instruments show presence of CO, the values determined by the laboratory of the State Committee is higher in this case too than those determined by the HPP

The values for the nitrogen oxide exhausts are practically the same, except for the exhausts from BKZ-160-100FB at No 1, the reading from Enerac-2000 is 102 5 mg/m^3, the reading from "Inspector" is 150 mg/m^3 The results of the checking measurements are attached

As the method of "Inspector 1" is a test-method, it is suggested to carry out two parallel measurements by Enerac-2000 and using the instruments "TESTO-33" from the laboratory of DONORGRES The results shall be in written form submitted to the inspection

Concerning formation and arrangement of the wastes, there has been found as follows

According to the data from the HPP, the territory is made up of three areas with the total area of 26 88 hectares

- 1 - 23 18 he - the industrial area
- 2 - 3 09 he - the ash-dumping area
- 3 - 0 6 he - an area in the collective orchards zone

In the limits on arrangement of the wastes issued by the State Committee for the Natural

Protection valid for 1997, there were not set the wastes resulting from draining the sewage waters at the ash-dumping area

The construction and installation works office "Krymenergostroi" has not submitted the act on setting the borders of the area in the nature

State Inspector / Signature / I P Shcherbakeva

Persons present at the time of the inspection

Engineer of "Krymenergo" GAEK O Yu Valiayeva
Chief Engineer of Simferopol HPP V N Cherkesov

On the ground of the above said, there is suggested

1 To make an additional checking of the exhausts of the harmful substances into the atmosphere

2 To keep records in the register for exhausts and in the register for measurements of the exhausts into the atmosphere - The grounds for that - "Instructions for organization of the control over the exhausts at the HPP" - RD 36 02 306-88

173

ODESSA CHP PLANT
Fuel Consumption

Month	X1000 m^3 Gas			Mazut	
	Consumption	Measured Calories	Contract Calories	Consumption	Calories
1-95	26350	7922	7979	3858	9630
2-95	23373	7907	7865	842	9630
3-95	23224	7894	7953	105	9630
4-95	17588	7872	7959	--	--
5-95	8179	7865	7918	--	--
6-95	1722	7850	7860	1045	9630
7-95	--	--	--	3217	9630
8-95	--	--	--	3173	9750
9-95	284	7850	7922	3810	9750
10-95	10143	7850	7922	407	9750
11-95	16623	7845	7922	2901	9750
12-95	20029	7834	7870	8277	9613
Total	147515	7879	7850	27635	9670

ODESSA CHP PLANT
Fuel Consumption

Month	X1000 m^3 Gas			Mazut	
	Consumption	Measured Calories	Contract Calories	Consumption	Calories
1-96	23557	7870	7946	6947	9530
2-96	20496	7890	7952	4477	9530
3-96	22081	7861	7927	3234	9639
4-96	15165	7820	7870	--	--
5-96	8828	7831	7850	--	--
6-96	6868	7862	7910	1007	9680
7-96	5583	7865	7890	1853	9652
8-96	6955	7865	7910	1117	9530
9-96	3605	8037	7998	50	9530
10-96	2027	8046	7965	1170	9530
11-96	10672	8028	7957	--	--
12-96	21492	8012	7945	51	9530
Total	147329	7902	7967	19906	9567

ODESSA CHP PLANT
Fuel Consumption

Month	X1000 m^3 Gas			Mazut	
	Consumption	Measured Calories	Contract Calories	Consumption	Calories
1-97	27380	7996	7924	--	--
2-97	25122	7905	7922	--	--
3-97	20271	7960	7917	--	--
4-97	14130	7927	7945	--	--
5-97	8901	7923	7960	--	--
6-97	7915	7902	7984	--	--
7-97	7705	7907	7995	--	--

Gas \$83/1000 m^3 Mazut \$95 to \$118 per tonne

COAL CONSUMPTION

	1995 P		1996 P	
	B (T)	Q p	*B (T)	Q p
I	379710	7097	367645	4285
II	298164	4393	256612	4210
III	320951	4509	264699	4354
IV	279651	4210	216863	4333
V	309413	3910	254222	4583
VI	319353	4022	255993	4747
VII	288009	3982	260548	4715
VIII	362394	4092	231768	4743
IX	391070	3672	231428	4717
X	419617	3608	229952	4496
XI	344118	3779	247744	4413
XII	311231	4437	268332	4106
Pic	4023711	4037	3085806	4464

NATURAL GAS

	1996 P		1997 P	
	B (T)	Q p	*B (T)	Q p
I	22069	8030	41599	8043
II	15726	8023	14889	8078
III	7813	8040	13023	8125
IV	1178	8030	20083	8115
V	--	--	34271	8100
VI	--	--	36519	8097
VII	--	--	23345	8123
VIII	14068	8098		
IX	25593	8110		
X	17410	8135		
XI	14222	8123		
XII	33175	8130		
Pic	151254	8092		

7/29/97

Simferopol Power Plant

Mazut and Natural Gas Consumption

1996: Total
Gas 123,336,000 Nm^3
Mazut 9891 tons

Heat Content (Average) Gas 7969 $Kcal/Nm^3$
$83/1000 M^3 Mazut 8767 $Kcal/Nm^3$

Elec = 5 3 Kopecks/KWH Cost, 7 11 Kopecks/KWH Krimenergo Sells

Month 1996	X1000 Nm^3 Gas			Mazut	
	Consumption	Measured Calories	Contract Calories	Consumption	Price/ton
Jan	13456		7924	279 tons	USD 194
Feb	13203		7879	634 (8660 Kcal)	197
Mar	10472	7858/8076	8796	3063	197
Apr	7258			912	197
May	6806			---	
June	7161	8435	8410	---	
July	9891	8651	8778	246	200
Aug	13478	8736	8875	---	
Sept	8447	8667	8930	1193 (9208 Kcal)	180
Oct	4580	8444	8835	2717	170
Nov	11263	7862	8135	142 (8602 Kcal)	180
Dec	17321	7841	7986	327 (8800 Kcal)	180

Simferopol Power Plant

Mazut and Natural Gas Consumption

Month 1997	X1000 Nm^3 Gas			Mazut	
	Consumption	Measured Calories	Contract Calories	Consumption	Price/ton
Jan	18812	7886	8097	---	185
Feb	17551	7841	7967	301	185
Mar	18526	8092		138	190
Apr	14817	7879		598	190
May	12531	8343		25	190
Jun	12674	8246		---	190

18