PN-ACC-255

Dispatch Center Upgrade Feasibility Study

Final Report

Prepared for:
Lithuanian State Power System
Vilnius, Lithuania

Prepared by:
USAID Team

Electrotek Concepts, Inc.
EPIC Engineering

September 1995

TABLE OF CONTENTS

1 INTRODUCTION 1
- 1 1 BACKGROUND 1
- 1 2 THE EXISTING CONTROL SYSTEM COMPLEX 2
- 1 3 STATE-OF-THE-ART OF EMS TECHNOLOGY 3
  - 1 3 1 System Migration 4
  - 1 3 2 The Open System 5
- 1 4 STUDY OBJECTIVES AND SCOPE 8
- 1 5 THE STUDY APPROACH 10
- 1 6 REPORT ORGANIZATION 11

2 CURRENT DISPATCHING SYSTEM 12
- 2 1 POWER SYSTEM OPERATION 12
- 2 2 ORGANIZATION AND FACILITIES 12
- 2 3 NATIONAL CONTROL SYSTEM LIMITATIONS 15
  - 2 3 1 Control System Description 15
  - 2 3 2 Control System Required Improvements 23
- 2 4 ENTERPRISE SYSTEM LIMITATIONS 24
  - 2 4 1 Enterprise System Descriptions 24
  - 2 4 2 Enterprise System Required Improvements 25
- 2 5 COMMUNICATION SYSTEM LIMITATIONS 27
- 2 6 ASSESSMENT OF FUTURE OPERATIONAL NEEDS 28
  - 2 6 1 National Center Needs 30
  - 2 6 2 Enterprise Center Needs 31
  - 2 6 3 EMS Telecommunications Needs 31

3 CONTROL SYSTEM UPGRADES REQUIRED 32
- 3 1 GENERAL EMS REQUIREMENTS 32
- 3 2 DC VILNIUS REQUIREMENTS 36
  - 3 2 1 DC Vilnius SCADA Functions 36
  - 3 2 2 DC Vilnius EMS Functions 44
  - 3 2 3 DC Vilnius Hardware and Facility Requirements 58
- 3 3 ENTERPRISE DISPATCH CENTER REQUIREMENTS 60
  - 3 3 1 ENE Center Functions 60
  - 3 3 2 ENE Hardware and Facility Requirements 62
- 3 4 RTU FUNCTIONAL REQUIREMENTS 63
  - 3 4 1 CPU/Memory 65
  - 3 4 2 Communications 65
  - 3 4 3 Analog Inputs 66
  - 3 4 4 Analog Outputs 66
  - 3 4 5 Digital Inputs 66
  - 3 4 6 Accumulator Inputs 66
  - 3 4 7 Digital Outputs 67
  - 3 4 8 Control Outputs - SBO 67
  - 3 4 9 Sequence of Events Inputs 67
  - 3 4 10 Power and Environmental Requirements 68
- 3 5 EMS COMMUNICATIONS SYSTEM REQUIREMENTS 68

4 BENEFITS OF UPGRADES 70
- 4 1 ECONOMIC JUSTIFICATION 70
- 4 2 INTANGIBLE BENEFITS OF THE SCADA/EMS 72

5 BUDGETARY ESTIMATION OF PROJECT COSTS 74

5 1 PHASE 1 BUDGETARY ESTIMATES 74
5 2 PHASE 2 BUDGETARY ESTIMATES 75
6 EMS IMPLEMENTATION AND STAFFING 76
6 1 GUIDELINES FOR PROCUREMENT 76
6 2 STAGED IMPLEMENTATION 77
6 2 1 SCADA . 77
6 2 2 ENE SCADA 77
6 2 3 RTUs . . 79
6 2 4 Applications . 79
6 3 ORGANIZATION AND STAFFING REQUIREMENTS 79
6 3 1 Project Organization and Management . 79
6 3 2 Permanent System Staff . 82
6 3 3 Staff Training Requirements 82
6 4 TIME PHASED IMPLEMENTATION OF THE ENE CENTERS 82
6 5 FINANCING AND PROCUREMENT 83
7 SUMMARY, CONCLUSIONS AND RECOMMENDATIONS 84

1. INTRODUCTION

1.1 BACKGROUND

This report concludes a feasibility study, conducted by EPIC Engineering, Inc , under subcontract to Electrotek Concepts, Inc , for the Lithuanian State Power System (LSPS) to upgrade the LSPS nationwide, hierarchical EMS/SCADA System The study was funded by a grant from the United States Agency for International Development (USAID) to Electrotek Concepts and was part of a larger Regional Energy Efficiency Project covering Eastern Europe and the Baltics (Contract 180-0030 Electrotek Concepts) The feasibility study was performed during the period February through October 1993 The study was carried out with close collaboration between LSPS staff and EPIC and Electrotek's senior consultants The Lithuanian Energy Institute in Kaunas provided invaluable support in data collection, administration and coordination The LSPS plans and internal study results were carefully reviewed and used as a starting point for the material presented here

During this period, Lithuania was negotiating with the World Bank for a loan One component of the loan was the upgrade of the transmission system Justification for this component of the loan was needed in order to provide the World Bank the technical and cost justifications needed for loan consideration It was mutually agreed by USAID, LSPS and Electrotek that this study would provide the necessary justification for this request Therefore, in order to stay within budget and schedule, the feasibility study emphasized the cost and benefits of the upgrades while somewhat reducing the lower level technical details

The primary motivation for upgrading the LSPS control system is the need for increased efficiency in the operation of the power system Actions were already underway to migrate the current system to a state-of-the-art EMS system that will result in substantial fuel cost savings and improved security Secondary motivations for replacing the system are increased stability, reduction in maintenance costs and increased availability of expansion and replacement parts

The purpose of the study was to determine the operational needs of LSPS, evaluate alternatives for upgrading the system, recommend solutions, and estimate the project's staffing and cost requirements The scope of the study included three major areas

- DC Vilnius EMS/SCADA - Review the current situation with the EMS/SCADA and recommend a course of action that will produce the maximum cost saving during the next five years
- Enterprise (ENE) SCADA Systems - Evaluate the ENE SCADA capabilities and recommend a course of action for upgrading them to provide the desired functions and to best support the upgrades to the DC Vilnius system

- Communication Network - Evaluate the current communication network with respect to maintainability and its ability to support the above upgrades and recommend a course of action which will best accomplish this

The study has resulted in an overall system design and implementation plan that requires coordinated changes in all three areas However, the communication system issues are broader in scope since the communication network must support LSPS corporate needs and could involve cooperation/coordination with other agencies such as the telecommunication ministry and the gas companies in order to achieve a viable cost effective solution Therefore, the communication network issues are addressed herein only to the extent they are directly relevant to the dispatching functions The majority of the report is devoted to the dispatch centers and the data acquisition equipment in the network

1.2 THE EXISTING CONTROL SYSTEM COMPLEX

The current dispatch system consists of a four level hierarchy, with DC Baltija, located in Riga, Latvia, at the top of the hierarchy as shown in Figure 1 1 The second level, the Dispatch Center at Vilnius, links to six Enterprise centers Each Enterprise Center controls remote terminals in one or more District Centers Remote Terminal Units (RTUs) in the 330 kV network connect to Vilnius either directly or via a store and forward concentrator/multiplexer at each Enterprise center

A description of the Lithuanian State Power System control centers and their functions follows

- DC Baltija - The dispatch center DC Baltija is the coordination center for the Baltic States including Latvia, Lithuania and Estonia This dispatch center is responsible for control of the 330 kV network, for coordinating the energy balance of Lithuania, Latvia and Estonia, and for energy imports and exports to areas in Russia, (Kaliningrad) and Belarussia Russia controls the system frequency

- DC Vilnius - The Dispatch Center DC Vilnius is responsible for operation of the Lithuanian 330 kV network and some of the 110 kV network, including generation schedules and system security This is the National Dispatch Center (NDC) for LSPS DC Vilnius currently has no responsibility for frequency or interchange regulation Decisions which affect the operation of the interconnection are coordinated with DC Baltija The dispatcher of the Lithuanian State Power System is operatively responsible to the dispatcher at DC Baltija.

- Enterprise Centers - The seven Enterprise Centers (ENEs) carry out all DC Vilnius' control orders, maintain the electrical system and control system equipment and are responsible for delivery of power to the 35 kV and 10 kV networks of the District Dispatch Centers

- District Dispatch Centers - The District Dispatch Centers, approximately 50 in number, are responsible for the 35 kV and 10 kV systems

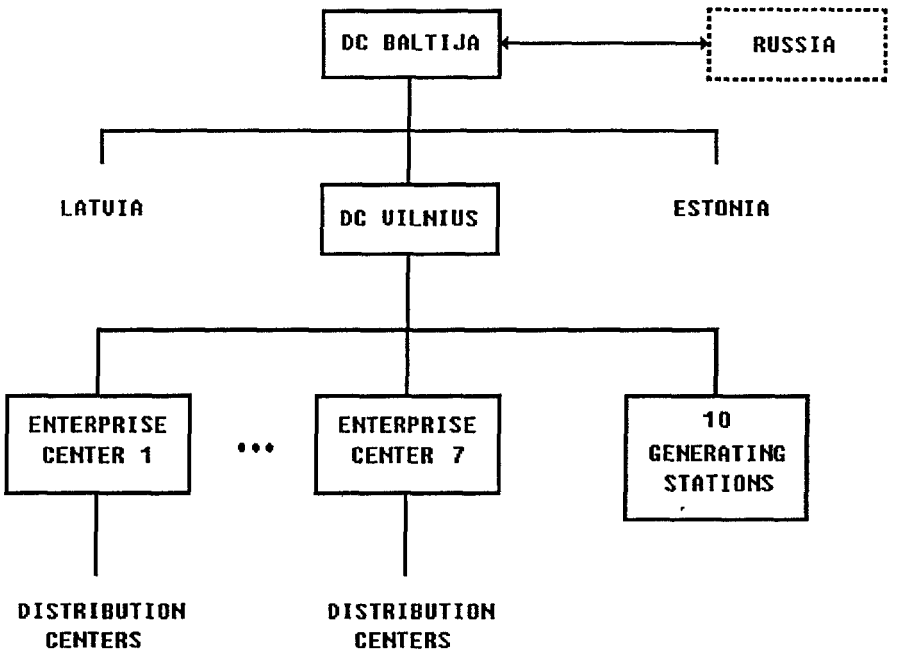

FIGURE 1.1 BALTIC-LITHUANIAN SYSTEM HIERARCHY

1.3 STATE-OF-THE-ART OF EMS TECHNOLOGY

The state-of-the-art in EMS technology has recently taken an impressive leap forward with the advent of powerful, inexpensive computers The SCADA/EMS developments that began in the early 1960's are being converted to the more portable operating systems, the use of C language, and ported to the new generations of powerful RISC

workstations and PCs Two things have contributed to this increased progress, both of which came from the world of business computing First, the advances in computers in the last 10 years have virtually removed the constraints imposed on applications by a shortage of memory, disk storage and computational power Second, the advent of local and wide area networks, built according to internationally accepted standards, has made distributed processing a reality Distributed processing relieves the system developer from the artificial burden of trying to make the entire SCADA/EMS, with its attendant man-machine, data acquisition, alarm processing, power system applications and other functions, run on a single machine

The combination of these two factors has revolutionized the thinking of SCADA/EMS designers Lack of processing power, formerly a major bottleneck in system design, is now a minor technicality Increasing the capability of the processors generally requires only a few thousand dollars and even the PCs of today can supply many times the power previously available from the mini-computers of a few years ago Techniques that were once dismissed as impractical for real-time systems can now be implemented Relational databases, using the Structured Query Language (SQL) are now commonplace in recently developed systems for data engineering and for handling applications such as historical data processing and reports Each year new and more powerful processors become available and the availability of standardized software increases

Distributed processing is now probably the single most effective tool to satisfy the automation needs of large enterprises like the electric utility companies It allows the addition of hardware and software for parallel operation in a system, thus simplifying the scheduling and distribution of the system load and making the entire system more robust It makes it possible to install resources that exactly meet today's requirements with the certain knowledge that the system can be upgraded as the requirements increase Because of the possibilities inherent in distributed processing, many utility companies are now seeking to interconnect all the computational systems within their organization to promote the smooth flow of information both up and down and across the organization One of the most notable things to result from the distributed processing capability is the system migration concept for the installation or upgrade of a SCADA/EMS

1.3.1 System Migration

System migration takes two forms First, it is possible for a utility to buy a new system that meets only their immediate needs and to add to that system as needs increase Additions are possible using products from one or more hardware and software vendors. By following the rules for distributed processing, the user may develop his own programs or port programs that he has already developed for previous systems. In this manner the system can grow or migrate from one set of functionality to another Second, it is possible for a utility to add equipment to an existing system to replace functions or groups of functions The goal can be prolonging the life of the existing system, eventually replacing the system in a step by step process or both Projects representing both the first and second forms of migration are now in service

The result of the trend toward migration means avoiding multi-million dollar, total system replacements and using a free market approach to buying each individual software package based on its own merits As a by-product of the process, the dependency on a single vendor that has long characterized the SCADA/EMS marketplace is disappearing Many SCADA and power system application developers are now offering their products on both personal computers and workstation platforms Implementation assistance and training are offered separately on an as needed basis

1.3.2 The Open System

Historically, and until fairly recently, EMS/SCADA systems used large, centralized computer architectures, usually in a dual redundant configuration, with graphical user interface consoles and often with front-end communication processors The main processors performed all of the functions including both the SCADA and the advanced applications Typically the entire system was supplied by a single vendor and the interfaces between subsystems were not publicly available or poorly defined Integrating third party applications was difficult and expensive Because additional computing power could not be added in small increments, satisfying additional needs involved replacement of the entire system, which was expensive and time consuming

These disadvantages have been overcome by the new open and distributed architecture for EMS systems The IEEE Working Group on Energy Control Centers defines Open Systems as

> ***Open Systems**: The ability to enhance or completely replace an existing EMS, in part or in its entirety, without relying on one vendor for its implementation*

By definition, an Open System must have the following properties

- Uses vendor independent standards that are publicly maintained and supported
- Uses hardware independent operating systems
- Has standard application program interfaces
- Uses standard communication protocols
- Provides a common graphical user interface for all applications
- Has the ability to upgrade selective portions of the software and hardware

The above properties can be realistically realized only in a distributed environment The open, distributed environment has the following desirable properties

1 Interoperability - is the ability of computers from different vendors to exchange information

2. Scalability - the entire system can be implemented on a range of platforms from large multi-computer systems to a single workstation

3 Portability - is the ability to use software on a variety of hardware platforms

4 Extensibility - is the ability to add resources in increments as the needs change with minimal impact on the remaining system

5 Evolution and Adaptability - The technology will continue to evolve and the system must be able to evolve and adapt to these changes

6 Use of the client server architecture

The concept of distributed processing has become so well accepted that international standards have been established as guidelines so that products from all vendors who follow the rules can function together IBM describes the distributed processing environment as follows

> *"Distributed processing is the shared processing of information among two or more application processes that can be at different locations within a communications network*
>
> *The application and the location of the data to be manipulated or shared determine the distributed processing requirements*

A distributed application consists of two or more application processes, each on a separate central processing unit (CPU) Each application process might perform a different processing function for the application Intermediate results might be sent from one application process to another until the final result is reached Using an established communications dialog, the application processes use the communications network to exchange information and data "

The role of industry accepted standards is fundamental in developing an open, distributed system Standards can be developed by international bodies such as ISO, CCITT, IEC, IEEE or standards can be de facto, i e , widely supported by suppliers and users, or standards can be just widely used technologies Standards for EMS/SCADA systems involve the Operating System, the Graphical User Interface (GUI), Data Communication and Networking protocols, Data Base Access, Application Level Interfaces, and Computer Networking including personal computers (PC s).

The Operating System standard is POSIX which actually defines the interface between the application and the operating system(OS) Any OS can provide this POSIX compliance and POSIX compliant operating systems are available on many hardware platforms POSIX was first developed by IEEE and is based on UNIX It has been adopted in ISO Microsoft's DOS/Windows/Windows NT is a de-facto desktop standard because of the huge installed base More loosely, UNIX in its many variants is considered an open operating system

Graphical User Interface X/Windows is a windows management system which makes display functions independent of the hardware and operating system platforms. MOTIF provides a set of high level graphical elements layered on X/Windows

INTRODUCTION

Data Communication and Networking Standards are based on several sources The OSI seven layer reference model, developed by the ISO, is the most widely accepted profile and contains a set of ISO standards for each of the seven layers, which are

Application
Presentation
Session
Transport
Network
Link
Physical

The application layer includes standards for file transfer, message handling, electronic mail, virtual terminal, etc and is the layer to which the user applications interface The link layer includes Ethernet CSMA/CD, token ring, token bus, while the Network Layer includes X 25 This standard is primarily designed for heterogeneous computer-computer communication

There are also ISO standards for network management and security which do not belong to a specific layer

TCP/IP, while not yet an ISO standard, is a de facto standard because of its widespread use and is supported by all UNIX systems

Data Base Access The use of relational data bases is gaining increasing acceptance for data base generation and maintenance as well as for storing, retrieving, analyzing and viewing historical data SQL is the main query language for these data bases

Application Program Interfaces. The application program interfaces (API) are a critical component of the open architecture Essentially, standard APIs allow application programs to communicate with each other and with system software In an EMS, APIs may exist for data base access, for alarm and event initiation, for user interface and so on API was the subject of a recently concluded project by EPRI in which all of the major EMS/SCADA suppliers in the United States as well as the major U S consultants and third party developers participated

Networking and PC interfaces. PCs are used extensively for spreadsheets, word processing, and other desktop applications In most organizations, PCs are on a LAN and interfaces to them are now required from EMS systems Novell, IBM and Microsoft implementations have established the standards in this area

Industry specific standards There are also several industry specific standards In the electric utility industry, ELCOM and ICCP (which replaces the WSCC and IDEC protocols) are used for inter-control center communication in Europe and North America respectively and they are being considered by the IEC for inclusion in IEC 870. The Electric Power Research Institute (EPRI) in the U S has developed a Utility Communication Architecture (UCA) which uses the OSI seven layer model to develop the UCA profile for use by electric utilities Standards for communication with Remote Terminal Units (RTUs) are also defined and included in IEC870-5 A variant of this

protocol called the DNP(Distributed Network Protocol) was developed by Harris Corp in Canada and permits multiple master stations to RTU communication In early 1994, the IEEE selected the DNP and the IEC870-5 (second choice) as the interim standards A new MMS based standard is also under development under the EPRI UCA initiative

Nevertheless, it is important to realize that open systems are not easy to design and build EMS/SCADA systems have very stringent requirements which are not easily met in spite of the conceptual simplicity of the open architecture These requirements are

Performance The performance of the system is of paramount importance Execution times of complex applications, display of critical information in a timely manner, and the need to process data and alarms when there is a system disturbance impose severe demands on the system

Availability Critical functions are required to have such high availability that redundant hardware is usually necessary

Data Integrity and Security The data must be reliable, timely and accommodate a diverse group of users It must be available to the entire enterprise, but must be protected from unauthorized use

Transparency The dispatcher and other users must not be required to "understand" the precise architecture In other words, to the user, the system must appear as one integrated system and not require him to know how it is structured

Support Mixing and matching hardware and software from multiple independent sources requires careful consideration of on-going support, maintenance and upgrade needs

From the preceding discussion it is clear that any new system should conform to standards which are widely used in the industry Purchase of closed, proprietary systems should be avoided This is necessary to enable the system to evolve, reduce the life cycle costs, and to take advantage of technological advances To mitigate possible schedule and budget risks, it is very strongly recommended that systems be purchased only from experienced suppliers

1.4 STUDY OBJECTIVES AND SCOPE

The primary objective of this study is to define a plan that will enable the LSPS to upgrade their data acquisition and control equipment to streamline the operation of their transmission system and to operate it more economically The recommended solution takes into consideration both the immediate and long term goals of LSPS and will equip them to adapt to future power system needs It is designed to minimize the effect of the constantly changing computer technology by allowing incorporation of new developments as they occur

Another objective is to provide an assessment of the costs involved in achieving the upgrades and to justify incurring these costs The estimated costs are based on current prices for electric utility hardware and software available in the marketplace

This study should form the basis for development of a tender document for an international procurement process Because of this, the document describes the existing system in some detail and the proposed solution takes specific advantage of the products available in today's market

The full scope of the study involved the following activities

1 Review of the existing LSPS system and assessment of its strengths and weaknesses relative to the goals

2 Identification of the functional requirements for the Lithuanian National Control Center and the requirements it imposes on other parts of the LSPS system

3 Development and evaluation of alternative configurations and approaches for the development of the LSPS SCADA/EMS and recommendation of the preferred alternative

4 Analysis of the communication requirements for the recommended multi-tiered system and analysis of the existing communication facilities to determine a recommended solution

5 Determination of the staffing, training and implementation efforts required by LSPS personnel in order to install the software and hardware and integrate the system

6 Development of the preliminary implementation plan for all the recommended upgrades, budgetary cost estimates and a preliminary time schedule

The study addresses three areas which play a major part in achieving the desired goals

- DC Vilnius Upgrade - The existing data acquisition equipment in DC Vilnius will be upgraded to a modern EMS/SCADA to provide the data and control capability necessary to manage the power system more efficiently This is a key part of the overall strategy as the near term fuel savings achieved by such a system are sufficient to justify the upgrades The goal is to have the system in place by early 1995 to maximize these short term savings The system must have the same capabilities to communicate with RTUs as described for the Enterprise centers as it will connect directly to some RTUs and will have to communicate with some Enterprise centers before they are upgraded. The implementation of the SCADA capability will open the way for installation of modern applications programs which in turn will provide the operational improvements leading to cost savings

- The Enterprise Centers Upgrade - These centers will be upgraded to modern SCADA systems capable of communicating with "state-of-the-art" RTUs and at the same time capable of communicating with the existing RPT-80, multiplexer and the MKT-2 RTU The ability of the SCADA systems to communicate with these three

types of devices allows the migration to take place in controlled steps and to obtain benefits of the migration as soon as possible The goal is to make it possible to replace the existing RTUs with more modern RTUs capable of supporting a full SCADA/EMS The main functions required in the short term are the collection of energy values, tie line values, generation and system frequency data to support the generation control function Only certain RTUs must be replaced in order to gain a large share of the cost savings Likewise, only certain capabilities of the RTUs may be necessary in the beginning, but remote additional functions may be activated as required without adding hardware or software

- The Communications Network - Reconfiguration of the communication network plays an important part in the proposed design The existing lines will be reconfigured to produce a "star" network connecting a modern SCADA system at each of the Enterprise centers directly to the SCADA/EMS at DC Vilnius Each of the Enterprise centers will form the center of a second "star" connecting to each of the RTUs in its area Because the existing communications system was not fully utilized, it can be reconfigured to serve the needs of the new system in the near term Thus, while the communications network will have to be upgraded eventually, it is not a prerequisite to the planned computer systems upgrades

The changes described above are a part of an overall plan to migrate the existing system from a data acquisition role to a full SCADA/EMS capability in a short period of time The goal is to allow LSPS to operate the power system efficiently and to provide a system that can easily and economically evolve to meet future needs This is best accomplished by using open system techniques to the extent they are available and avoiding solutions that use proprietary hardware and software as much as possible

1.5 THE STUDY APPROACH

The study began by developing a complete understanding of the LSPS operational requirements and determining what upgrades, if any, would be necessary to bring the operational procedures and standards up to the level expected by utilities with modern SCADA/EMS facilities The first step was to review internal LSPS documentation to develop an understanding of the system This activity was prerequisite to a trip to Vilnius to further discuss the existing system and future plans in detail. With this understanding of the needs the study concentrated on identifying specific functional requirements and the planning activities needed to implement and support them

The fact finding portion of the study showed that LSPS had already begun the migration of their system by replacing their mainframe computer with a Novell LAN which provides the same functionality Careful study of this system and discussions with LSPS made it clear that the continuation of the migration already begun should be one of the alternatives for implementation of the final system The final plan takes advantage of work already done and, by pursuing several in parallel activities, should allow completion of the final system in about one year

In addition to the information provided by LSPS, studies previously prepared by the world bank for Lithuania and other countries provided valuable source material for understanding both the LSPS situation and the general situation with emerging Block

countries This information contributed heavily to both the findings of the study and the cost justification of the recommendations

1.6 REPORT ORGANIZATION

The document is preceded by a management summary which is a brief management level summary of the report giving only a top level description of the goals, procedure and findings

- SECTION 1 - INTRODUCTION, explains the background, the control system, state-of-the-art for SCADA/EMS, scope of study, study approach and document organization

- SECTION 2 - CURRENT DISPATCHING SYSTEM, explains the current method of operation, organization and facilities It addresses the limitations of the national control system, the Enterprise centers and the communications system and assesses their future operational needs

- SECTION 3 - CONTROL SYSTEM UPGRADES REQUIRED, details the required upgrades in terms of general EMS, DC Vilnius, Enterprise, RTUs and communications system

- SECTION 4 - BENEFITS OF UPGRADES, defines the operational and economic benefits expected as a result of the recommended upgrades

- SECTION 5 - BUDGETARY ESTIMATION OF PROJECT COSTS

- SECTION 6 - EMS IMPLEMENTATION AND STAFFING, explains the terms of estimated LSPS man-hours and personnel categories

- SECTION 7 - SUMMARY, CONCLUSIONS AND RECOMMENDATIONS, contains a summary of the study and a concise presentation of the conclusions and recommendations resulting from the study

2. CURRENT DISPATCHING SYSTEM

2.1 POWER SYSTEM OPERATION

LSPS and the other Baltic countries operate as a power pool, according to agreements between the ministries of energy in the member countries The operation of LSPS and the utilities in all the Baltic countries is controlled at the highest level from a central location Each member utility has a national dispatch center responsible for generation and high voltage transmission within its country Network control, interchange, short term and long term scheduling are done under the supervision of the central dispatch center at Riga, DC Baltija

Each of the member companies prepares an annual and a periodic forecast of its load and generation DC Baltija uses these inputs to plan and schedule the operation of the entire pool and sends each of the member utilities a daily plan for generation, exchange and control of their generation network

LSPS has no automatic generation control capability All control of the generation is by verbal orders on the telephone or by FAX There is some equipment for reactive power control but no software to assist LSPS in optimizing its use The system losses are 10% to 15%, providing an excellent opportunity for savings due to increased efficiency

LSPS has already begun the system migration task by replacing the functionality of their mainframe based system with a Novell Netware local area network However, the RTUs are limited and expensive to maintain The concentrators lack sufficient memory and processing power to effectively utilize the communication lines The communications equipment is aging, but with replacement of the other portions of the system, can be upgraded at a slower pace

Acknowledging the fact that the system is in a state of change, this chapter describes what is currently available in the control system, communications system and the remote equipment It further cites the problems with the existing equipment and forms the basis for the recommended changes found in a later chapter

2.2 ORGANIZATION AND FACILITIES

The current dispatch system consists of a four level hierarchy, with DC Baltija, located in Riga, Latvia, at the top of the hierarchy as shown in Figure 2 1 The second level is the Dispatch Center at Vilnius which is linked to seven Enterprise centers Each Enterprise Center is linked to remote terminals in one or more District Centers Remote Terminal Units (RTUs) are linked to Vilnius either directly or via a store and forward concentrator/multiplexer at each Enterprise center

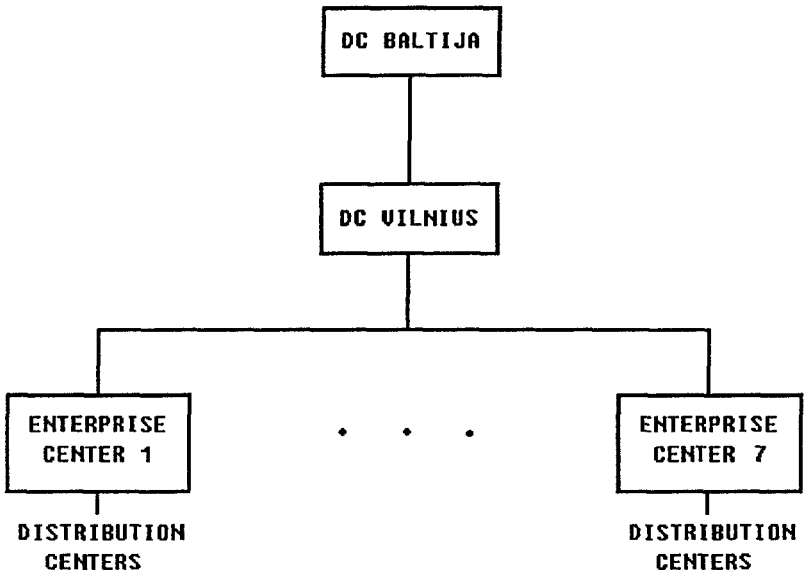

Figure 2.1 LSPS System Heirarchy

CURRENT DISPATCHING SYSTEM

A description of the Lithuanian State Power System control centers and their functions follows

- DC Baltija - the coordination center for the Baltic States, Latvia, Lithuania and Estonia The data and control links are automatic for limited amounts of power system data, and an electronic mail link is used for alphanumeric data such as scheduling information

  This dispatch center is responsible for coordinating the energy balance of Lithuania, Latvia and Estonia, and for energy imports and exports to areas in Russia (including Kaliningrad) and Belarussia Russia (at Moscow) controls the system frequency

  The Dispatchers at DC Baltija prepare the generation and interchange schedules for all the member power companies, using forecasts solicited from each company Based on these inputs and equipment availability, DC Baltija formulates a combined forecast and an hour by hour generation schedule each day for the next 24 hours These data are read into the computer daily in an area called "The Dispatcher's Register for 24 Hours " DC Baltija prepares Registers to cover the next day (24 hour period) and sends one to each member company by telex each day DC Baltija prepares schedules for Saturday, Sunday and Monday and sends them out on Friday The dispatcher of DC Baltija supervises and controls interconnected electrical flows and generating reserves for the power stations designated in the register for operation that day

  To accomplish this, the dispatcher of DC Baltija directly operates or orders the operation of

  - All the interconnected overhead lines of 330 kV
  - Other 330 kV power lines
  - 50 MW (and more) units of thermal power stations, including Ignalina
  - 20 MW hydropower units
  - Communication and remote control equipment serving DC Baltija
  - Inter-system automatic load monitoring and load shedding

  The dispatcher at DC Baltija is also responsible for formulating the generation and power exchange plans for each of the member centers in the Baltic system

- DC Vilnius - the main dispatching center for Lithuania, coordinates generating stations, enterprise centers and the 330 kV and the 110 kV transmission lines within the country

  The Dispatch Center at Vilnius is responsible for operation of the Lithuanian 330 kV network and some of the 110 kV network, including generation schedules and system security. DC Vilnius is not responsible for frequency or interchange regulation Decisions which affect the operation of the interconnection are coordinated with DC Baltija The dispatcher of the Lithuanian State Power System is operatively responsible to the dispatcher of DC Baltija

The following people and organizations are directly responsible to the dispatcher at DC Vilnius

- Shift leaders of power stations (10 power stations)
- Dispatchers of central dispatch offices in the electrical network
- Enterprise center operators (7 electrical network enterprises)

- Enterprise Centers - The seven Enterprise Centers (ENEs) carry out all control orders from DC Vilnius, maintain the electrical system and control system equipment and are responsible for delivery of power to the 35 kV and 10 kV networks of the District Dispatch Centers

- District Dispatch Centers - The District Dispatch Centers, approximately 50 in number, are responsible for the 35 kV and 10 kV systems

2.3 NATIONAL CONTROL SYSTEM LIMITATIONS

2.3.1 Control System Description

The LSPS control system was originally made up of "one-on-one" data gathering and remote control systems In this system there was one master station and one remote station for each remote location This system did not make efficient use of the communications lines and, because of the large number of master station units, required a high level of maintenance

Figure 2 2, Original System Concept, shows the original configuration of DC Vilnius and the Vilnius Enterprise center This configuration was the same for all the Enterprise centers where the connection from DC Vilnius was to a single RTU

Through a series of upgrades, the original system was replaced by one consisting of two central mainframe computers at DC Vilnius and a concentrator/multiplexer at each of the Enterprise centers To accomplish this, LSPS replaced the master stations of the previous "one-on-one" systems with the RPT-80 multiplexer/concentrator unit LSPS did this at the Enterprise centers and at DC Vilnius, resulting in a great improvement in the functionality of the system, faster response times and lower maintenance of the interface equipment The RPT-80 is an intelligent device capable of supporting multiple RTUs, providing a local interface to display the real-time data and forwarding the real-time data to an RPT-80 at another location Making use of these functions, LSPS designed and is now implementing a two-tiered data acquisition system with the master station, using two mainframe computers, located at DC Vilnius and submasters located at each of the Enterprise centers

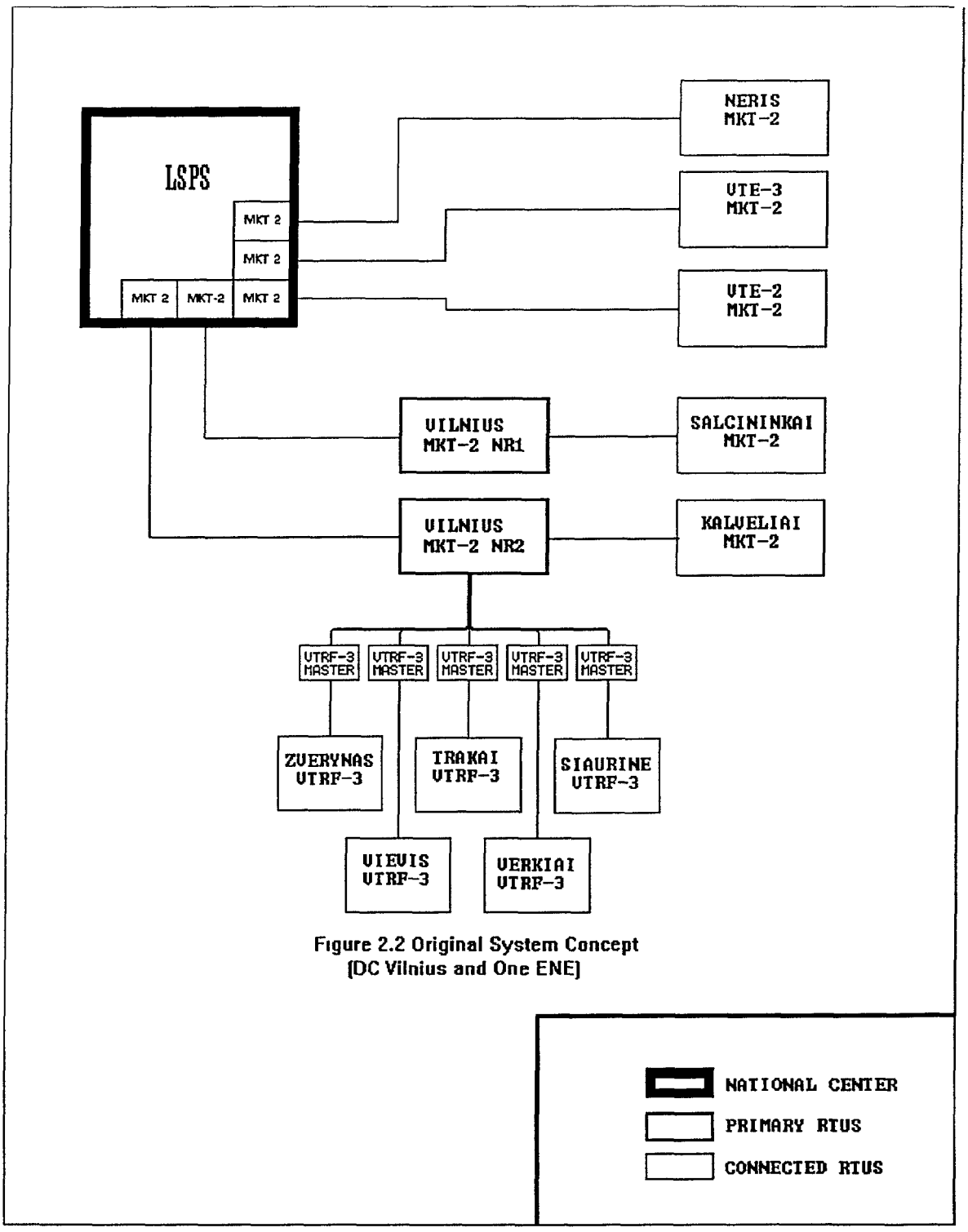

Figure 2.2 Original System Concept
[DC Vilnius and One ENE]

Figure 2 3, Multi-Tiered System, shows the intended configuration of DC Vilnius using the RPT-80 as a data concentrator This configuration allows the direct connection of MKT-2 RTUs with a limited local presentation capability and the periodic routing of data to DC Vilnius The RPT-80 has two distinct advantages in that it can collect and buffer the data from the other RTUs and transmit it over a higher speed, 9600 bps, line This approach allows much better utilization of the existing communications system and a considerable reduction of receiving equipment in DC Vilnius, which now can receive data from all the ENEs using only two RPT-80s

The mainframe computers, however, proved to be undependable and caused both maintenance and availability problems As a result, LSPS decided that a parallel effort would be made during the course of the upgrade to replace the mainframe computers with a LAN based system Because of financial constraints, LSPS chose Novell Netware and DOS based personal computers to implement the alternative system The Novell LAN is now operational and can be run in parallel with the mainframe computers

The Novell Netware system is now installed at DC Vilnius and is operational Some portions of the ENE systems have been installed, but not all Figure 2 4, Current System Diagram, shows the overall connection of the system While the system is not complete in some areas, it is operating with data from the remote terminals and enough of it is in place that the mainframe computers have been retired The master station is installed in the configuration shown in Figure 2 5, Existing Operations Information Complex (OIK) This system has been selected as the starting point for the purposes of this report The following description explains the concept of the current system, a concept which will be retained for the recommended system

Data comes to the data collection center in a protocol developed in-house with programs written for the RPT-80 and the personal computer

The data collection computer receives the data and routes it to the database on the Novell server via the Novell Netware LAN The data is stored in "real-time" data files on the Novell server as follows

- TM - Telemeasurements or analog inputs
- TS - Telesignals or status and indication values
- C - Calculated Values

In addition to processing the incoming data and forwarding it to the server database, the data collection station prepares and maintains historical data on the server The following values are saved for the time periods indicated

- 10 second data files (for 24 hours)
- 2 minute data files (for 7 days)
- 1 hour data files (for 2 months)

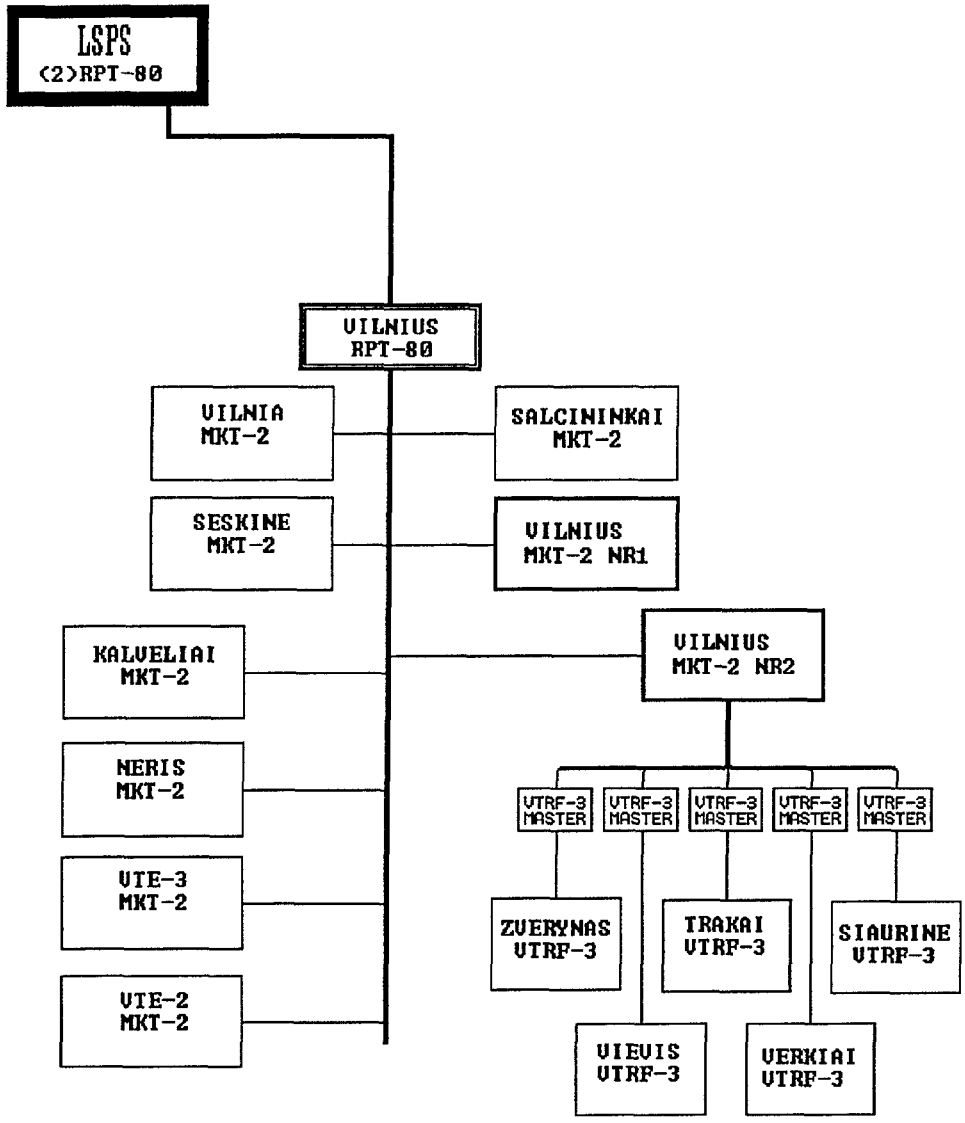

Figure 2.3 Multi-tiered System
(PLANNED FUTURE STATE)

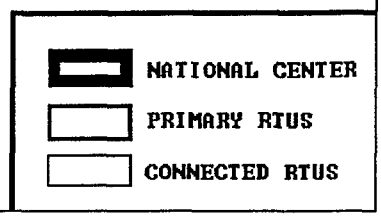

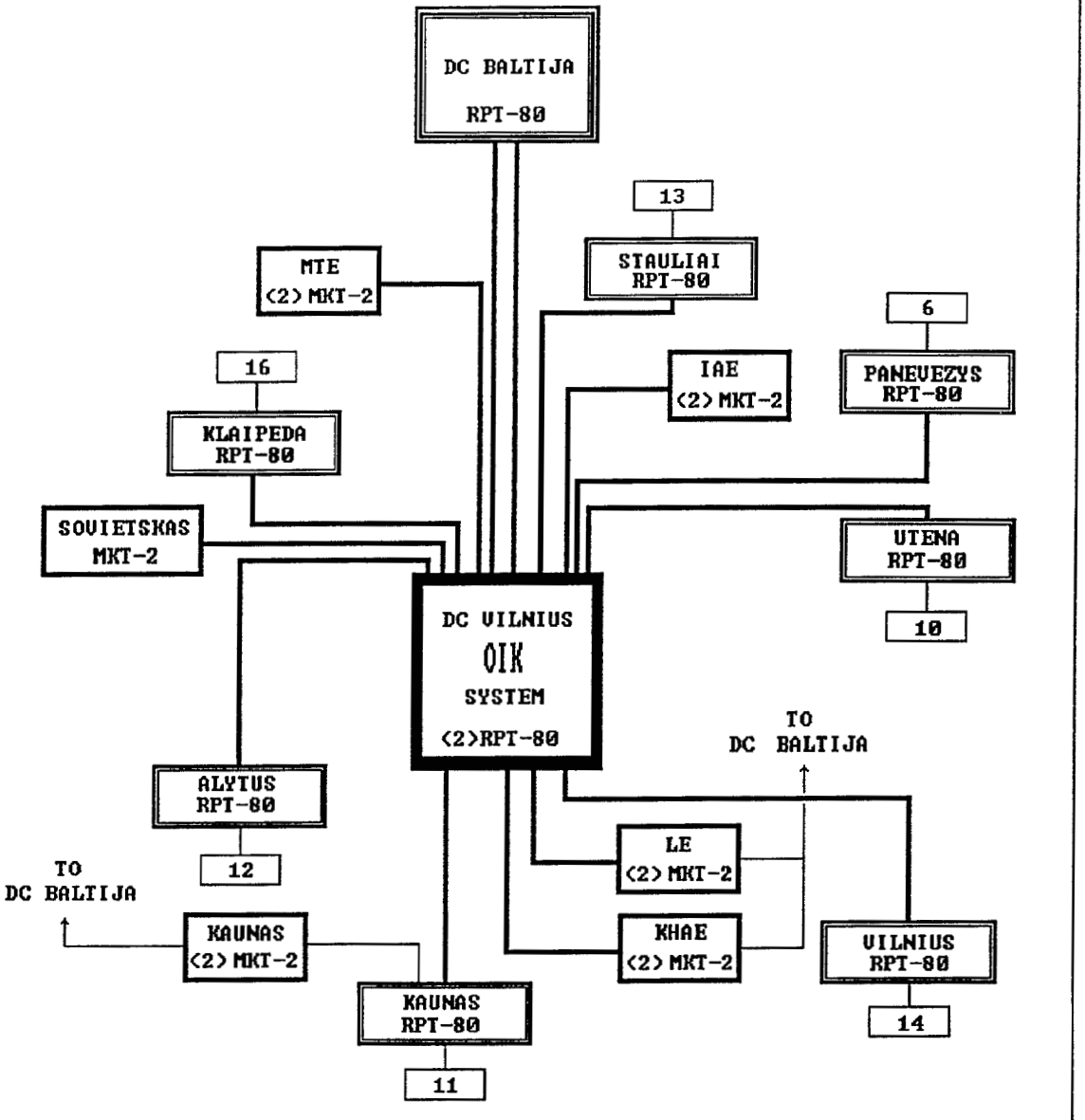

Figure 2.4 Planned OIK System and Field Modifications

(Recommendations use this as a starting point.)

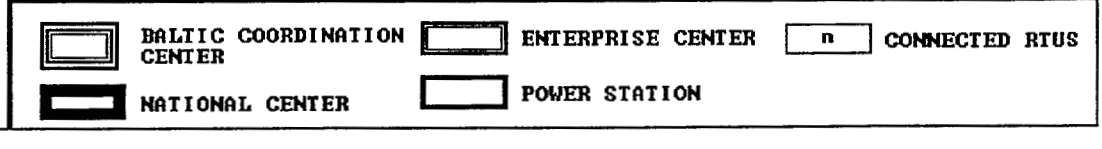

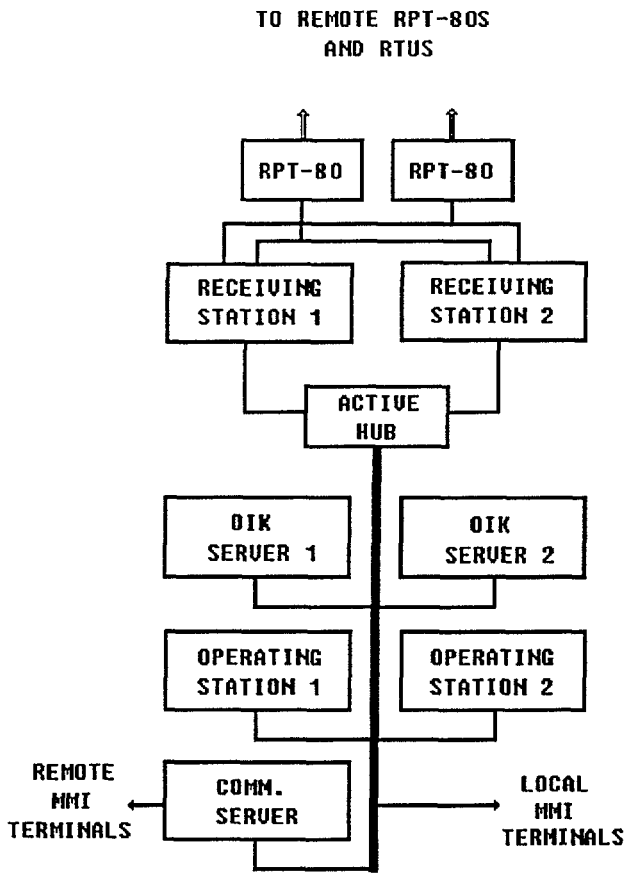

FIGURE 2.5 EXISTING
OPERATIONS INFORMATION COMPLEX
(OIK)

The current servers do not support automatic failover with all disk data being saved during the transition and made available to the replacement unit The next version of the Novell Netware (4 0) will support disk mirroring which will make the automatic failover of the servers possible This is planned as a future upgrade

The RPT-80s are in redundant pairs with both receiving the same information (note that this is a cyclic system and there is no outgoing data) Each of the data collection stations is active with both of the RPT-80s, but only one unit of the pair stores data in the Novell server as determined by a failover assignment file in the Novell server It is also possible to duplicate real-time displays and use them to display estimated data instead of the telemetered values

The local workstations are connected to the server via the Novell Netware LAN For efficiency they have the backgrounds for the commonly used CRT pictures stored on their local disks These pictures can be used to display the predefined data When a picture is displayed the real-time data are requested from the server and arrive at 10 second intervals A remote workstation may operate the same as a local workstation or it may only receive mail messages Mail messages are used for transferring planning, forecasting and similar information A remote terminal was installed at DC Baltija on April 15, 1993, for mail message use

LSPS is already using several power system applications programs For example, LSPS now has two off-line Load Flow programs which they use for line outage evaluations and for setting transformer taps LSPS have funded a State Estimation program which is nearing completion and is now in test LSPS plans to run this program on the Novell LAN system using real-time data in the near future

2.3.1.1 Generating Stations

Generator controllers which allow control from a remote location are available only at Ignalina and the Lithuanian Thermal Power station The equipment is obsolete and needs to be replaced Modern generator controllers, allowing control by RTU output pulses or setpoints, need to be installed at each generating station which is to be controlled All generating stations have MKT-2 RTUs connected to DC Vilnius either directly or through one of the concentrators at the nearest ENE, but none of these RTUs has provision for remote control commands These RTUs must be replaced by RTUs with control outputs

The generating plants and their overall capacity in megawatts are shown in Table 2 1 The total generating capacity is 5,178 MW, excluding the pumped storage capacity of Kruonis.

Table 2 1 Generating Capacity

Power Station	Capacity MW
Elektrenai TPP	1,800
Vilnius CHP	384
Kaunas CHP	183
Kruonis (pumped hydro)	400
Mazeikiai CHP	194
Klaipeda	11
Kaunas Hydro	106
Ignalina	2,500

2.3.1.2 Remote Terminal Units (RTUs)

The RTUs were manufactured by Soviet companies some years ago, but are now obsolete and are no longer manufactured There are several different types with different characteristics and communication speeds. The currently installed types of RTUs are listed and described below Only the first two, RPT-80 and MKT-2, communicate with DC Vilnius All the others communicate only with the ENE centers

- RPT-80

  The RPT-80 is a concentrator/multiplexer which has the ability to act as a direct interface to the MKT-2 RTU, the most widely used of the current RTUs The RPT-80 also has the ability to route data to another RPT-80 with its own protocol or to route data to a terminal or computer system in an ASCII protocol, which allows the data to be either displayed or processed When the current changes to the system are complete there will be two RPT-80s in each Enterprise center and two in DC Vilnius

  The RPT-80 has a maximum of 64 transceiver channels, each of which can transmit a maximum of 248 information bytes (a byte may contain a single analog measurement or eight status bits) at a maximum rate of 200 bps Because of the small random access memory available, the RPT-80 is limited to 1024 transmitted bytes and can receive and process only 2048 information bytes.

- MKT-2

  There are 77 MKT-2 RTUs in the LSPS system Each was connected to a single master station in the beginning but now are connected to the RPT-80 units The MKT-2 is a cyclic remote unit, that is, it sends data continuously, repeating the same sequence of data items over and over The MKT-2 does not provide for control of power system equipment and is used exclusively for data acquisition Each MKT-2 provides for 30 telemetered measurements, each of which may be either an 8 bit analog value or a group of 8 indications Special additional

equipment has been designed to provide 16 power meters (pulse accumulators), but this has not proven successful

- TM-800

  The TM-800 remote terminal has a single message which includes 20 status measurements and one analog measurement The single analog in each message can represent one of 15 measurements The analog measurement to be received is determined by a control message from the master station which selects the analog input to be sent in all subsequent messages This makes it possible to cycle through the 15 analogs sequentially, one per message until all have been read However, the extra control message required to switch the analog input for each read message doubles the bandwidth required and halves the already low capacity of the line Control is available for this RTU with a possibility of 20 remote management commands The RTU operates at a telecommunication rate of 50 bps

- VRTF-3

  The VRTF-3 RTU supports 80 status measurements and 40 remote management commands No analog measurements are supported The RTU operates at a telecommunication rate of 40 bps

  The messages utilize a pulse length modification to encode the status of the breakers and the desired controls

- UTB-3

  The UTB-3 Supports 80 status measurements and 40 remote management commands The UTB-3 supports no analog measurements The operating principles are the same as those of the VRTF-3 but the VRTF-3 is based on transistors while the UTB-3 is based on relays The message structure is like VRTF-3, but the UTB-3 sends a message only when a change of status occurs The RTU operates at a telecommunication rate of 40 bps

2.3.2 Control System Required Improvements

The Novell Netware system, in its current configuration, is not adequate to support all the functions of a full blown EMS in a national control center While it is adequate for the today's data acquisition function, it will not handle the increased data requirements imposed by modern application and control programs Further, it will not provide adequate processing capability for running the power system application programs at the speed and frequency found in a modern control center In order to realize maximum savings from more efficient operation of the power system and decreased maintenance of the control system the system must be upgraded

There are, however, definite advantages to the existing system which make the task of upgrading more straightforward The system's networked concept is sound and the system can be readily expanded to provide the computational power required for an

EMS LSPS has done a considerable work on the man-machine interface which will directly apply to the future system The system can be upgraded by adding new processors and functions to the LAN without necessitating changes to the over sixty data terminals already in place A database has been defined and is currently in use to collect the data This central database concept can be modified to accept data from other sources such as modern SCADA and applications software The LSPS system is based on the widely used Novell Netware software which will likely be supported and upgraded over the life of the system

2.4 ENTERPRISE SYSTEM LIMITATIONS

2.4.1 Enterprise System Descriptions

Except for the RPT-80 concentrator/multiplexer, which is common, the Enterprise centers have different levels of data acquisition and control equipment Some centers have personal computers linked to the RPT-80 concentrators, which allow retention of data rather than just a real-time interface, while others do not In two cases the planned concentrator/multiplexer is not yet installed and the RTUs connect directly to DC Vilnius Control of the power system equipment is handled with direct wiring from the mapboard and through existing "one-on-one" control systems Some of the data from the one on one master stations is routed to the RPT-80 for delivery to DC Vilnius

There are three levels of implementation in the ENEs dispatch centers This is a result of the changes which are now under way to route the MKT-2s and other remote RTUs through the RPT-80 in every system. Note that the RTUs of each ENE are connected to a local control panel and mapboard and, where it is supported, the ENE operator can control breakers at this level The goal is to have all ENE centers brought up to a minimum standard

The first configuration, shown in Figure 2 6(part I), Original ENE Equipment, shows the original RTU configuration It consists of an MKT-2 used as a concentrator to send data to DC Vilnius The outputs of remote units coming into the ENE are used as inputs for the MKT-2 unit which originally provided the information to a corresponding MKT-2 master station at DC Vilnius, but now sends it to an RPT-80

The second configuration, shown in Figure 2 6(part II), ENE with Concentrator, is the second step in the evolution of the ENEs and contains an RPT-80 as a concentrator to send data to DC Vilnius It does a much better job than the MKT-2 in the concentrator role because it has a memory which allows it to receive data on several low speed lines and transmit it on a single high speed line A terminal can be added to the RPT-80 which allows the user at the ENE to view the real-time data as it is updated Only the latest version of the received data can be viewed from this terminal and no storage is devoted to SCADA applications

The third configuration, shown in Figure 2 6 (part III), ENE in Completed Form, represents the final step in the migration plan currently underway It also consists of an RPT-80 used as a concentrator to send data to DC Vilnius, but the RPT-80 is also interfaced to a local DOS computer which allows a database to be maintained with

some level of SCADA functionality Note that even in this configuration the RPT-80 is connected directly to the RPT-80 at DC Vilnius No form of data reduction, such as change detection and data by exception, is done and no return traffic from DC Vilnius for control or selective data requests has been implemented A second DOS computer can be added for the reception of mail messages so the ENE can receive schedules and reports from DC Vilnius

We will describe the third system in more detail because it is our departure point for the recommended replacement system

The system installed in the ENEs should be capable of providing several levels of functionality to fit the requirements of each center, but the basic system configuration from the smallest to the largest should be compatible and the common parts identical to reduce the requirements of training, maintenance and spare parts Since the distributed, multi-tiered system approach is being used, the advanced functionality needed for DC Vilnius must be supported at each ENE center

This system should provide an interface to the existing RTUs, a local man-machine interface for SCADA operation, while still performing the functions now performed by the RPT-80 The placement of each of these systems must be coordinated with the center in Vilnius and the RPT-80 units should be retired as the new ENE hardware is installed

2.4.2 Enterprise System Required Improvements

The RPT-80 in the Enterprise centers has a limited man-machine capability allowing the viewing of only real-time data via tabular screens Even with a PC attached it has limitations because neither it nor the MKT-2 RTUs support the full range of modern RTU functions

While mapboard switch control is available at the ENEs for some breakers, there is no modern control system capability at this level The security of the control equipment is not high enough and the equipment is obsolete The operators should have control of the system from a modern SCADA console which allows viewing of a complete set of necessary operating information This functionality includes display of dynamic data on one line diagrams, alarm and event processing, report generation, historical data processing and much more

- Generating Stations

  It is recommended that suitable generator controllers be purchased to allow the future implementation of Automatic Generation Control at a national or "Baltic Pool" level The generator controllers, where they exist, are outdated and difficult to maintain These need to be replaced with units which are compatible with modern remote control systems

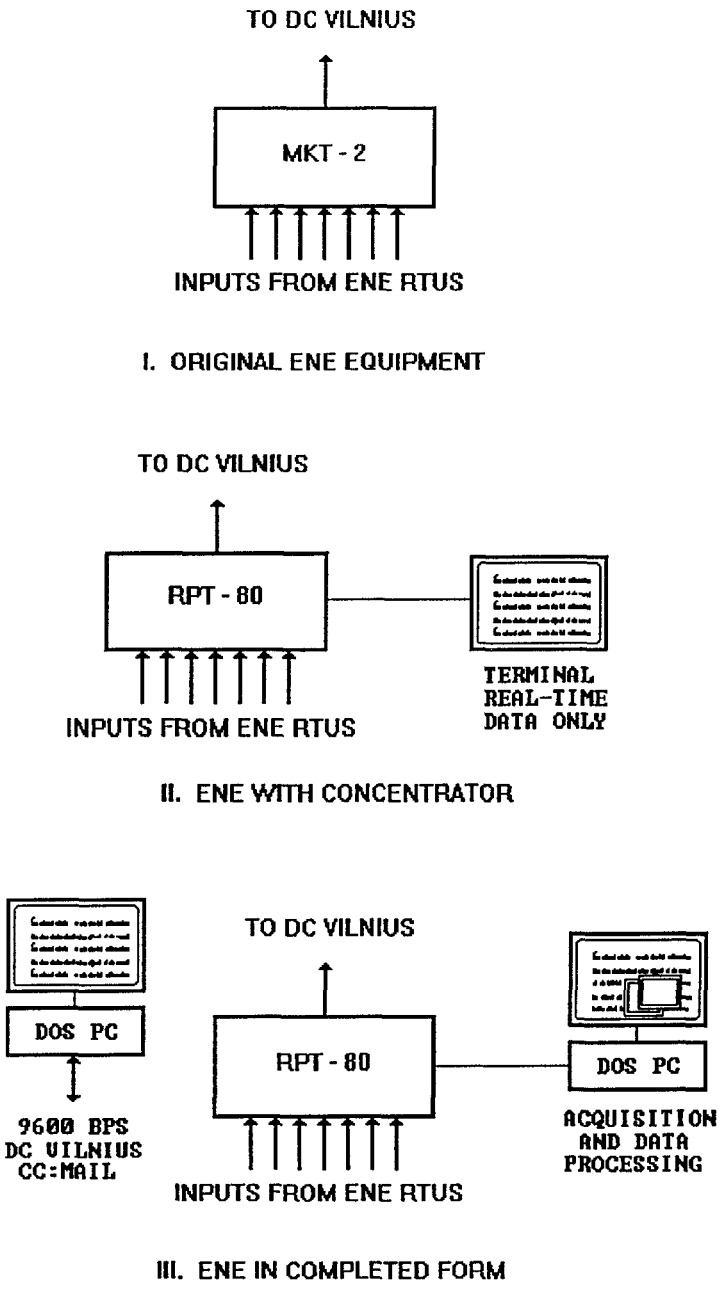

Figure 2.6 ENE IMPLEMENTATIONS

- Remote Terminal Units (RTUs)

  Of the current RTUs, only the RPT-80 is a reasonably modern, intelligent device All other RTUs are older designs which are obsolete and no longer manufactured even in Russia Several Russian and Ukrainian manufacturers are working on designs for a new generation of RTUs History has shown, however, that new production from these vendors must be installed, tested, and upgraded for some time before it reliably meets the design goals This cycle takes some time and LSPS has been reluctant to purchase during the first two to three years of new product availability

  The current RTUs have no pulse accumulators and cannot be used for meter reading An attempt to add this capability to the MKT-2 RTU was not successful

  The precision of the eight bit analog measurements does not satisfy the requirements of dispatch in all cases, particularly in the case of high quantity power flows Modern RTUs are equipped with 12 bit analog resolution increasing the representable accuracy by a factor of 16

  The MKT-2 cannot receive commands and since most of the RTUs are MKT-2s it is not possible to send control commands from DC Vilnius Modern RTUs support digital controls in the form of analog outputs and pulsed outputs The control function is imperative to achieving efficient control of the generating units via an AGC program

  The RPT-80 random-access memory of 8 Kbytes is too small and severely limits its capability The RPT-80 processor's 2 MHz clock rate also severely limits its capability The concentrator function should be performed by a SCADA system computer with enough processing power to efficiently use modern data reduction techniques for the store and forward function

  The existing RTUs need to be replaced, over a period of 3 to 6 years, with modern RTUs capable of being programmed to support multiple communication channels with a number of different RTU protocols SCADA/EMS software is required to handle both modern RTUs and the existing units Once the SCADA/EMS is installed, a gradual replacement and "cutover" of RTUs should be done with minimum impact on the operation of the system Since modern RTUs are able to employ multiple communication rates, the communication system upgrades may be made virtually independently of the RTU replacement program

2.5 COMMUNICATION SYSTEM LIMITATIONS

LSPS has 1, 3 and 12 channel Power Line Carrier (PLC) communication systems and 12 and 60 channel copper cable or other physically connected communication systems as shown in Figure 2 7 Each communication system links installations of LSPS such as dispatching centers, power plants, and high voltage (HV) power substations Part of the bandwidth of each channel provides a fixed network of data links supporting up to 200 bps per channel The rest of the channel bandwidth supports a voice grade switched

telephone network Data channels of the same total bandwidth are available using PLC facilities The two types of channels are treated as if they were identical, both by the telephone system and the fixed data network Most remote devices have at least two channels available to cover loss of a single channel and LSPS has attempted to insure that one link is PLC and the other cable However, this policy has not been possible throughout the system as there are not sufficient cable facilities in some areas

A standard telephone channel allows the frequency band 0 3 kHz up to 3 4 kHz The frequency band of channels which are assigned for data transmitting is divided into two parts

a) 0 3 - 2 4 kHz for dial-up telephone channel,
b) 2 4 - 3 4 kHz for data transmitting channel

The maximum baud rate for data transmission sub-channels depends on the type of modem used, and is as follows

a) 200 baud for modem TGFM produced in Poland,
b) 200 baud for modem APST produced in Russia,
c) 100 baud for modem APT produced in Russia

The number of data transmission sub-channels which can operate in the frequency band from 2 4 - 3 4 kHz depends on baud rate The existing combinations are as follows

a) 6 sub-channels for 50 baud,
b) 3 sub-channels for 100 baud,
c) 1 sub-channel for 200 baud

This data transfer capability is clearly insufficient for a modern control system and the communication system must be improved as the data requirements for the centers increase

2.6 ASSESSMENT OF FUTURE OPERATIONAL NEEDS

The LSPS, the generating plants and the Enterprise centers must operate as a cohesive unit, carefully scheduling generation to reduce system losses At the same time the LSPS must be mindful of the present and future opportunities for interchange with its neighbors A series of changes to system operation have been mapped out through the year 2010 according to a number of different scenarios All these scenarios have one thing in common, they call for increased utilization of fossil fuel and ultimate shutdown of the Ignalina nuclear power plant LSPS needs to equip their system to operate with the highest possible efficiency in order to be able to economically supply power to Lithuania and its neighboring countries under these conditions

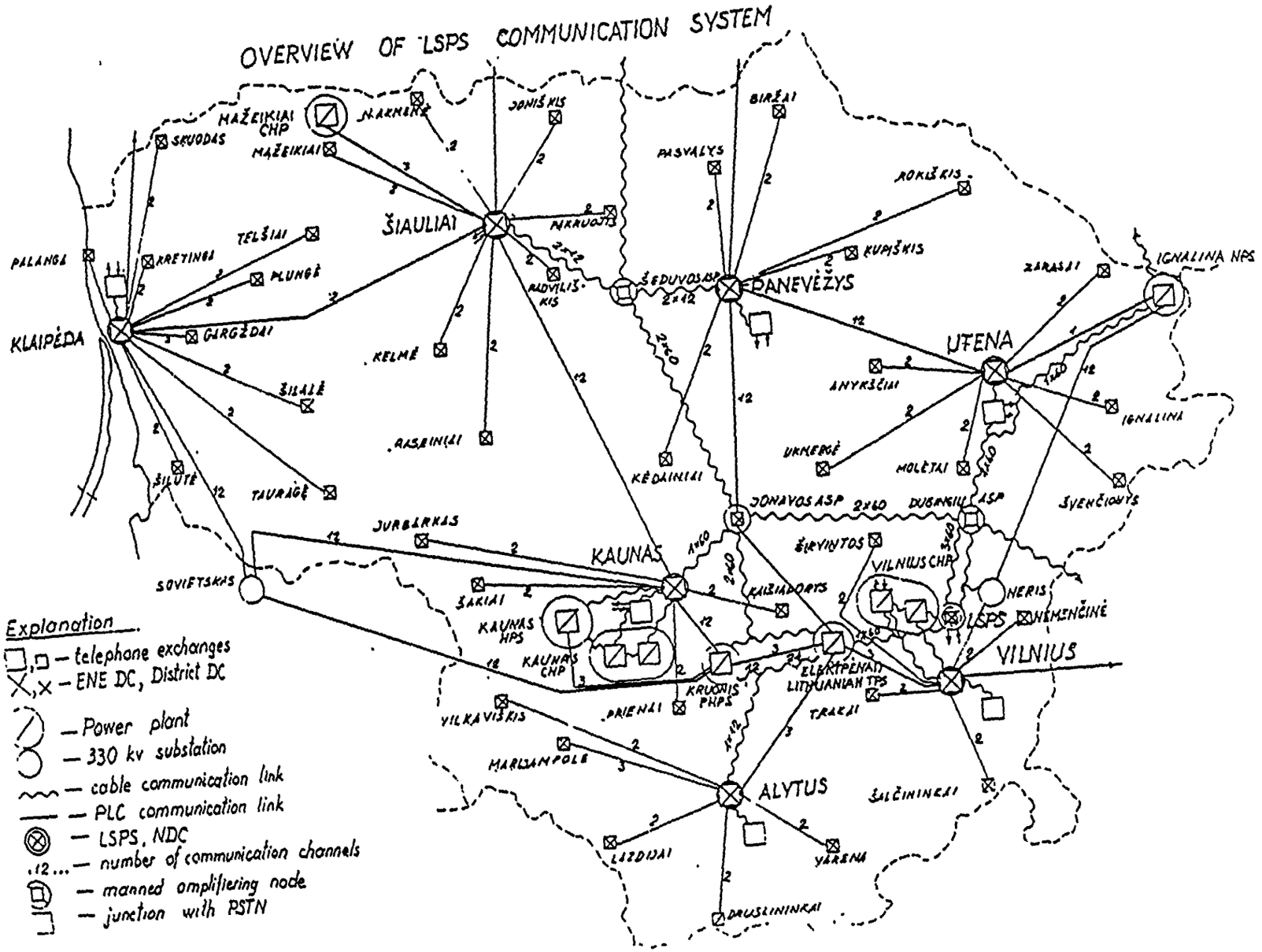

Figure 2.7 Overview of Communication System

LSPS will be well served by making the required changes to their electrical transmission control system to be able to efficiently deal with the complex operational needs during and after the transition period The future changes as they are understood today are

- A different level of cooperation with Russia
- Possible changes in the cooperation with the Baltic Countries
- Increased use of fossil fuel during planned upgrades to Ignalina nuclear units
- Emphasis on reduction of transmission losses and fuel consumption
- Careful control of interchanges with other countries

The upgrades required are outlined in the following sections

2.6.1 National Center Needs

The National Center, DC Vilnius requires several specific upgrades in concert with the overall requirements described above These changes are closely connected to other changes in the system and generally must be considered part of a concerted effort

The computer system at DC Vilnius needs to be upgraded to take advantage of the technology now available in new RTUs and readily available power applications software This should be done in an evolutionary manner, building on the Novell Netware system which has already been developed

In addition to the general data acquisition and control requirements, DC Vilnius requires the capability to quickly and efficiently determine the most economical generation scheme and automatically control the power system generation

DC Vilnius requires the ability to effectively schedule the energy in the power system and to evaluate transactions with other power companies LSPS will be required to reliably forecast load, plan for optimal use of the hydro power and effectively commit their thermal units in the most efficient way Increased capability for accurate energy accounting is also required

The power network must be robust and should avoid unnecessary transmission losses through the use of state of the art power system application programs This means that the network data quality must be improved, contingencies must be analyzed and avoided and the system operated in an optimal fashion Power system network applications are needed for this

Operator training needs to be improved to allow the operators to take full advantage of the changes in the operating tools This implies a requirement for both additional classroom training and for functional training in a simulated operational situation Training simulation software is required for the most efficient type of training

2.6.2 Enterprise Center Needs

Each of the ENEs should have a minimum functionality which makes it able to participate efficiently in the overall system It is also important that the operation of the power system from the ENEs be efficient and standardized This makes operation of the power system more effective and reduces the cost of making system improvements since they can be developed once and installed for each ENE

The computer systems in the ENEs need to be upgraded to provide a more efficient vehicle for the acquisition and transfer of data to DC Vilnius The most sensible approach is to use the same type of SCADA functionality used to upgrade the national center This will help insure interoperability when the systems are closely integrated into a multi-tiered distributed national system It will also supply all the modern SCADA functionality required to operate the ENE and take advantage of the capabilities of the new RTUs

The existing remote units need to be replaced to provide the functionality available in a modern system, to dispatch the system more efficiently The major functions now required are the acquisition of pulsed inputs (energy values) and digital, analog and pulsed control outputs for the operation of generating equipment and power system devices

2.6.3 EMS Telecommunications Needs

The telecommunications needs for the system are different, but for the immediate future, not more demanding in terms of communications equipment It is highly recommended that the communication system be upgraded in the near future because of the age of the equipment and future maintainability problems The problems and limitations of the existing communication system are

- Communication network equipment is an analog system in which the installed components have been operating for 10 to 30 years The equipment is largely out of production and is increasingly difficult to maintain It can be assumed that its performance will continue to degrade over time

- The narrow frequency band (0 3 - 2 4 kHz) prevents the employment of dial-up telephone lines for PC and telefax networking Standard modems at 2400 baud rate are required for these applications.

- The impulse interference in power lines and HV equipment affect the data channels and cause transmission errors and short-term data losses.

LSPS should plan for a phased upgrade of the communication system to provide a suitably robust and modern communications network to support a modern EMS This will include RTU channels of 1200 to 9600 bps and concentrator links from 9600 to 19,200 bps

3. CONTROL SYSTEM UPGRADES REQUIRED

3.1 GENERAL EMS REQUIREMENTS

There are general requirements on the EMS which cover the entire system and may be applied at several different locations or levels of authority and responsibility in the system These requirements are global in nature and affect the overall maintainability, usability and interoperability of the total system The top level requirements are the structure of the system and the basic functions which it is intended to supply These requirements are dealt with in more detail in the following subsections

One of the most important requirements, which applies to all aspects of the system, is the selection of widely accepted standards and strict adherence to them This procedure is vital to ensure that the component parts operate together through well designed interfaces, and equally important, that they provide the user with a consistent and easily understandable man-machine interface Examples of these standards are Motif and Common User Access (CUA) for the man-machine interface, and the ISO Open System Interconnection (OSI) for communications Similar standards are important in the selection of hardware, such as computer bus(es) and LAN hardware Throughout the system design it is important not to select major features or components which are proprietary to or available from only a single vendor

The overall LSPS system and its day-to-day operation are inherently hierarchical as described in Section 2 2 In such a system certain functional requirements involve cooperation by the hardware and software at all levels of the system as described in the following paragraphs

Data acquisition extends across all levels of the system Data must be sent from the substations to the ENE for its use in monitoring and controlling the system The same data, or a subset of it, must also be returned to DC Vilnius for the assessment and overall control of the transmission and generation systems The data should be stored in the ENE's SCADA system and forwarded to DC Vilnius on an exception basis All data must be updated at the start-up or failover of a system and all data should be sent periodically at a much slower rate to insure database integrity It should be possible to transfer the following types of information through all centers

- Analog Inputs (2 bytes)

  The new RTUs will provide analog values with greater accuracy than the existing RTUs The system will need to handle this larger value (minimum 12 bits) at all levels

- Analog Inputs (1 byte)

  Many of the original RTUs will be retained during the system upgrade The system must continue to handle this type of analog representation at all levels

- Digital Inputs

  Digital inputs must be handled in the existing format used by the RPT-80 and in the format supplied by the new RTUs This requirement applies to all centers in the system

- Pulse Counter Inputs

  Pulse counter inputs will be supplied in a 16 bit digital representation representing the number of binary counts received at the remote location during a fixed period The period will depend on the scheme adopted to convert and transfer counters The system will rationalize the incoming pulse counters and update an analog value in the database The handling of this type of data must be supported at all centers in the system

Control of power system equipment also extends across all levels of the system It must be possible to formulate and route the following control related messages between DC Vilnius and equipment in the substations of the ENE

- Digital Controls

  These are generally the on/off or open/close controls which result in the closure of a relay at the remote site to control a device such as a circuit breaker or a motor operated switch

- Pulsed Output Controls

  Pulsed outputs are generally used for control and for transformer tap changers They consist of messages that cause an RTU to generate one or more fixed length pulses to a device controller

- Setpoint Controls

  Setpoints are generally used for generator control and in some cases for setting power system devices such as tap changers They consist of messages to an RTU to generate parallel digital output value

- Control Feedback

  The system must be able to return feedback signals to the originator of a control signal to inform it of the results of his control action and the status of the device for which the control was attempted. This requires the storing and forwarding of information through the levels of the hierarchy

- Control Authority

  In a multi-tiered system, where controls are permitted from more than one level, a scheme for requesting and granting control authority must be set up This system must interoperate throughout the hierarchical system to insure that only the person currently having the authority to initiate a control action can cause that action The scheme must reflect the LSPS operating philosophy and must be built into the hardware and software of all the centers

Redundancy is necessary at all levels to insure continued operation when individual components fail Therefore the design should include redundant computers for key functions, such as the SCADA servers, redundant communication links between centers, and dual ported AGC RTUs with communication links to more than one center, as illustrated in Figure 3 1 for the suggested configuration of the SCADA/EMS at Vilnius

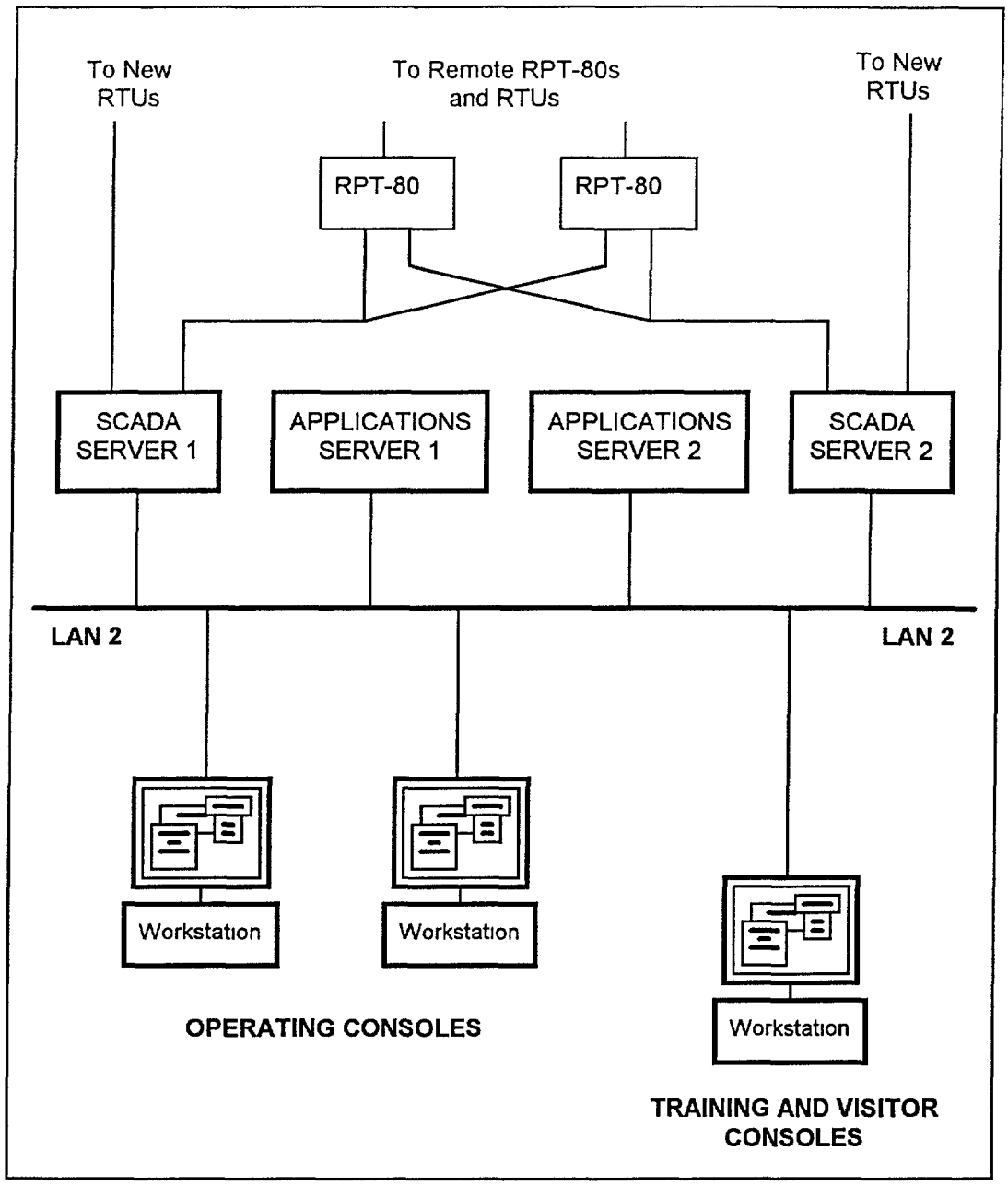

Figure 3 1 DC Vilnius SCADA/EMS Configuration

The software within each center should be designed in such a way that critical portions can continue to operate during most single component failures Each center should be able to have its most critical functions performed at another location

The mapboard capabilities need to be upgraded to show additional data and to have the ability to show line flow limit violations This may require replacing the existing mapboard or adding a large screen projection system This new device should be driven by the EMS computer.

3.2 DC VILNIUS REQUIREMENTS

DC Vilnius, as the operations center of the Lithuanian State Power System, will require a modern SCADA/EMS The SCADA/EMS will form the center of a hierarchical system that connects the seven ENE centers, all substations containing 320 kV and 110 kV equipment and all generating stations This subsection outlines the detailed requirements of the equipment and software that must be installed at DC Vilnius

3.2.1 DC Vilnius SCADA Functions

The system functions should consist of a comprehensive SCADA capability and applications programs in four areas generation control, network security, power scheduling and accounting and dispatcher training

LSPS should be able to perform the following functions from any work position in the SCADA system

- Control System Devices through RTUs
- Activate or Deactivate Communication Channels
- Activate or Deactivate RTUs
- Tag System Devices (Out of Service)
- Modify Analog Point Limits
- Acknowledge Alarms
- Manually Enter Data
- Interact with Application Programs
- Manage CRT Pages (Selection, Freeze, Print)
- Page and Scroll Displays
- Use the System Editor (Database and Equipment Definition)
- Generate and Schedule Reports
- Set System Date/Time
- Edit NDC Passwords
- Trend Data on Pen Recorders and CRTs
- Analyze Disturbance Data

The system should be based on a modern, widely used operating system with a modern and efficient windowing interface The standard software should supply the network management that allows file sharing and program to program communication among all the computers and programs on the LAN The combined system should provide a low cost, widely supported state-of-the-art platform with the expansion capability to provide for LSPS present needs and future expansion of 300%

The SCADA software should consist of modules that operate in the server, the MMI workstations and the applications servers The system modules should provide an interface to all application programs through a well-documented interface consisting of a set of generally available routines that are called by each application program to interact with the system database and/or the RTUs

3.2.1.1 Man-Machine Interface

The SCADA software should include a complete, user friendly Graphical User Interface (GUI) to provide the operator with a means of viewing and controlling the state of the power system The man-machine should utilize CRT screens, printers and mapboards to provide an efficient, consistent and user friendly presentation of information The full capabilities of the available technology should be used to present displays in an interactive windowing environment The system should support the design of custom display screens, in either tabular or graphic format utilizing no less than 16 colors, from any on-line MMI workstation

It must be possible to display real-time data on CRT screens and the data should be automatically updated as changes occur in the SCADA database Invalid or manually entered data should be clearly identified A display editor is to be provided to allow LSPS to build interactive displays The definition of a display consists of two parts, the static background information and the dynamic or foreground information that is linked to the database

The display background is built by selecting the following

- Alphanumeric Characters
- Special Symbols and Shapes
- Special Function Characters
- Color
- Size
- Tab Points

The resulting definition represents the background of the picture that will be seen when the display is called up Dynamic data will be linked to this picture to facilitate interaction between the display, the database and the operator

The following dynamic data and parameters may be selected to complete the definition of the display and link it to the database

- Status On/Off Representation
- Status Target Point
- Measurement Display Direction
- Measurement Display Type
- Measurement Display Target
- Operator Notes Display Area
- Alarm Acknowledge Target
- CRT Page Select Target
- Associated Point Names
- Text Strings
- Historical Data
- Conditional Displays

LSPS should be able to view and control the status of the power system from the interactive displays thus constructed The GUI shall enable the operator to perform actions such as

- Control of Power System Devices

- Setpoint Control

- Program Execution

  The operator shall be able to start and control the execution of application programs

- Activation/Deactivation of points, communication links

  Trend real-time and history variables This capability is needed to enable the operator to view selected variables as a function of time

- Manual Data Entry

- Access Control

  LSPS should be required to enter a password before gaining access to the system The level of authority of any user should be determined by the password he has entered The highest level of authority should have access to any point in the database and be able to redefine passwords

- RTU Editing

  The system should be equipped with an editor that supports the on line configuration of any RTU for the purpose of setting up the polling and data handling LSPS should be able to enter the name of the RTU and the data point identification information for each data type represented in the RTU

- RTU Activation/De-activation

  The operator should be able to place an RTU in the polling system and remove it from the polling system at any MMI workstation on the LAN, operating under a proper password

- Channel Editing

  The system should allow the addition and deletion of communication channels and the interactive assignment of the RTUs to the channels This should be accomplished through an interactive display page supplied with the system.

3.2 1.2 Polling System

An interactive display should be provided which allows the operator to set up the polling cycle for each existing data channel (RS-232 link) in the system The RTUs should be scanned at predefined frequencies if exception processing is not used

RTUs that include the exception processing capability should be polled at the highest rate possible, one after the other, according to the polling schedule with the period being determined by the speed of the line Even if polling by exception is used, the full complement of data should be returned periodically at a lower rate to insure database integrity

It should be possible to poll RTUs of different types on different communication channels It should also be possible to add, delete or reorder RTUs in the scan cycle of a communication channel

The polling system should support automatic switchover to a backup communication channel if the primary channel fails This function should be at a channel level and should automatically switch all RTUs on that channel at the same time

3.2.1.3 Alarm System

The conditions that cause a point to be in the alarm state should be defined when each database point is defined From that time on, the point should be monitored by the Alarm System, and if the defined alarm conditions occur, an alarm should be generated

It should be possible to designate which alarms are to be printed, posted to the event log and to sound an audible signal The latest alarms should automatically appear in an alarm list window and on the alarm summaries as defined below·

- Alarm List Window

  A list of the last twelve alarms should appear in an alarm list window on each connected workstation when SCADA software is running The twelve point IDs should be color coded depending on the state of the alarm

- Alarm Summary

  The Alarm Summary should list all points which are currently in alarm in the order of occurrence This display should allow for scrolling, window enlargement and window placement to provide a convenient method for viewing the power system alarm conditions The minimum information supplied should be

  - Date
  - Time
  - Name of Point
  - Description (Type of Alarm)
  - Current Value of Point

LSPS should be able to acknowledge alarms individually by selecting the point name in the display A global selection should also be available to acknowledge all alarms on a given page at the same time It should be possible to clear all the alarms in the summary from this display Note that the operator must be constrained to have proper authority in order to interact with the alarm system

- Selective Summaries

  LSPS should be able to select a special summary window that allows him to view only the system data points that meet one of the following criteria

  - All Analog Alarms
  - Analog Warning Alarms Only
  - Analog Critical Alarms Only
  - Rate of Change Alarms
  - Unacknowledged Alarms
  - Blocked Alarms

  It should also be possible to define summary windows which present database points having other distinguishing characteristics not necessarily associated with the alarm system Examples of desired summaries are

  - Failed Points
  - Points calculated using deactivated or failed data points as inputs
  - Control Points that have been Tagged out of service

3.2.1.4 Event System

The event system should provide LSPS with a history of key system events in an event log This log should be a normal file maintained by the operating system The SCADA software should open the log any time the primary server is on-line and record events as they occur until the size of the file reaches a maximum size When this occurs the SCADA software should close the file and open a new one with a different filename designation Management of old log files will be a LSPS responsibility

- The Event Log

  Events recorded in the event log should be presented in a dedicated window in chronological order However, LSPS should be able to select and change the order in which the fields of the event entry occur The following fields should be presented for each event:

  - Date
  - Time
  - Type of Event
  - Point Name
  - State at Time of Event
  - Description of Cause (LSPS Definable)

The event system should provide a search function that allows LSPS to search on any text string in any field The search should be possible in the forward or reverse direction and should be repeatable to find multiple occurrences of the same string The object of the search should be highlighted each time it is found

The event log should be generated as, or copied to, a standard ASCII file that can be copied and processed separately It should be possible to use commercially available sort programs and word processors to analyze the data and produce edited reports highlighting particular aspects of the event history

- Event Selection

  The user should be able to select the operator actions and power system changes that constitute events and therefore appear in the event log The following list is an example of the items that could be designated as events

  - RTU Point Operations
    (i e , selection and checkback, operation and checkback, cancel, deactivate, activate and add/delete control tag)
  - Alarm Activities
    (i e , point in alarm, return to normal, acknowledge, block)
  - Manual Entry of Data
  - Date/Time Change
  - Communication Errors
    (i e , RTU marginal, RTU failed, RTU error, channel error)

3.2.1.5 Calculation Package

Calculated values should include measured values and indication states that are derived mathematically from existing real-time, manually entered or previously calculated and stored values The calculations should be performed according to predefined equations or algorithms, and the results stored in the data base The operator should be able to define constants to be stored in the data base, and used in subsequently defined calculations The resulting stored calculated values should be processed and presented in the same manner as acquired values Calculated values should also be subject to the same rules and restrictions as acquired values

Calculations should occur on a cycle that matches the scan rate It is desirable that the time period for the calculation cycle be user adjustable to accommodate specific system needs

The following list is a minimum sample of the operators that should be supported

- Unary

  ! Logical NOT
  - Arithmetic negation
  + Unary plus

- Binary

  + Addition
  - Subtraction
  * Multiplication
  / Division
  % Remainder
  < Less than
  <= Less than or equal to
  > Greater than
  >= Greater than or equal to
  == Equality
  != Inequality
  && Logical AND
  || Logical OR
  = Simple assignment

- Functions

  Square root
  Absolute value
  Max
  Min

3.2.1.6 Historical Data Function

The SCADA software should be able to store time stamped historical values on a periodic basis and retrieve them according to the time stamp For example, a value could be stored each hour for 24 hours, and be retrieved by referencing the hour at which storage took place

It should be possible to store data values at any of the following time intervals

- Specified intervals of seconds
- Specified intervals of minutes
- Hour
- Day
- Month
- Year

Historical values should have addressability similar to telemetered values and should be available for use in Printed Reports, CRT Displays and Calculations.

3.2.1.7 Logging and Reports

The system should have a logging and reports capability that makes use of the standard printing facilities of the operating system. It should be possible to produce hardcopy of the event log, reports and the information that is viewed in displays The

software should support the use of multiple printers It should accommodate both graphic and character oriented printers The user should be able to assign the outputs to alternate printers

The printing system should automatically re-route the output of a failed printer to an alternate printer If the alternate is also unavailable the output should be stored to disk until one of the devices is available

The printing subsystem should present the normal output of the SCADA system with minimum LSPS involvement The following activities should be supported by the printing system

- Event Log

  One text printer should be designated as the primary event printer All events and alarms should be printed on this printer as they occur

- Reports

  It should be possible to create Reports using a report editor They should not be limited by the screen size and it should be possible to custom design reports to fit the dimensions allowed by the target printer It should be possible to schedule reports to print at a given time or to cause them to print on demand The user should be able to specify a unique legend to occur on every page of each report

3.2.1.8 System Maintenance Capability

A maintenance facility should be provided as a part of the SCADA system It should allow LSPS to define the parameters of the SCADA software from any MMI workstation, provided the user has the proper authority Examples of the maintenance functions that should be provided are adding/deleting RTU points and RTU's, testing changes before going on-line, adding new applications, changing communication link definitions, and re-assigning peripheral devices

3.2.1.9 System Summary Displays

The following system level display pages should be included

- Display Menu for Selection
- Alarm Summary
- Blocked Alarm Summary
- Analog Warning Alarm Summary
- Analog Critical Alarm Summary
- Tagged Device Summary
- Deactivated Device Summary
- SCADA System Equipment Status (Major System Components)
- RTU/Station Alarm Summary
- RTU/Station Measurement Point Summary
- RTU/Station Status Point Summary
- Control Pages for all SCADA and Maintenance Functions

3.2.2 DC Vilnius EMS Functions

To meet the future operational needs as described in Section 2 6 the system at DC Vilnius must contain a suite of EMS application functions to augment the SCADA functions

To meet the requirements for economic operation and energy exchange with neighboring utilities the following application programs are needed

- Automatic Generation Control - To provide the closed loop control of generation to meet demand and regulate frequency and net interchange A requirement of modern interconnected power systems
- Generation Dispatch Calculation - To meet current demand in an economic manner
- Energy Scheduling - To support energy interchanges with neighboring utilities
- Transaction Evaluation - To support economic assessment for energy exchanges with other utilities
- Energy Accounting - Accounting for energy transactions for billing and historical record keeping
- Short Term Load Forecast - for forecasting the hourly demand for several days, taking into account forecasted weather conditions
- Hydro Thermal Optimization and Unit Commitment - for scheduling generation for up to 10 days ahead and for costing longer term energy purchases and sales

To analyze power system network reliability and robustness the following application programs are needed

- State Estimator - To obtain the most accurate estimate of the system state
- Contingency Analysis - To evaluate the effects of equipment failures before they occur and permit planning and operational changes to mitigate them
- Short Circuit Analysis - To evaluate the effects of system faults before they occur and permit planning and operational changes to mitigate them
- Optimal Power Flow - To determine the operating status that will result in minimal production cost, minimize losses

A dispatcher training simulator is needed to train new dispatchers and to refresh the skills of existing dispatchers

These are standard programs and are described briefly in this section LSPS currently has a number of programs or needs that must be available in the new system These are:

- Voltage/VAR optimization in real time

- More intelligent alarm processing to alarm insecure operating states such as possible stability problems

- Locating faults
- Optimizing disconnection of 330 kV and 110 kV lines for control of overvoltages and for minimizing losses
- Centralized control of reactive power
- The ability to schedule combined heat and power plants

The applications described below must be able to meet these needs or additional applications must be provided

3.2.2.1 Generation Control Functions

AUTOMATIC GENERATION CONTROL

The objective of Automatic Generation Control (AGC) is to match the area's power generation to its time varying load demand, while keeping the frequency and the net power interchange close to scheduled values In addition, AGC should provide for time error correction and energy interchange correction The actual time error or the energy interchange error is then be included in the calculating the area control error

AGC is commonly referred to as a secondary control scheme while the local control at the plant, such as the turbine governors, constitutes the primary control. AGC sends either pulses or setpoints to the primary control system to change the MW output of the unit Note that this requires that automatic control equipment exist at the plant This equipment exists in some LSPS generating stations, but not all It should be installed in all stations to be used for control

Emergency assist and suspend control modes must be provided to handle exceptional conditions Emergency assist mode is entered when a rapid response is needed due to an unforeseen event such as loss of a unit If a disturbance causes the control error to increase above a certain magnitude, AGC should be suspended to prevent the possibility of control action exacerbating the situation

The allocation of the total required power generation among the units on control should be done in an economically optimum manner via the use of base point and participation factors

The following features must be provided

- The execution periodicity and the period for output of control actions may be changed by the engineer.
- Unnecessary control action should be avoided by using appropriate signal conditioning

- In the emergency mode, the ramping and output limits may be different to ensure more rapid response
- Additional units can be specified as being available for regulation if the regulating reserve falls below a prespecified value
- The performance of the AGC function should be monitored and the performance data displayed and stored for reporting
- The control actions should be individually tunable to the response characteristics of each generator

The AGC function should have interfaces to the following EMS

- Interchange Scheduling function
- Generation Dispatch Calculation function
- SCADA data (status of switches and breakers and metered values of actual generation and interchange)
- SCADA System (output of pulses and setpoints)
- Man-Machine Interface

GENERATION DISPATCH CALCULATION

The objective of the Generation Dispatch Calculation (GDC) is to minimize the total cost of operation for a specified load and a specified set of generating units It therefore finds widespread application in real-time control systems GDC is most often applied to thermal units However, other types of units, e g , hydroelectric, can be included if their production cost functions can be defined

The GDC function should determine

- The base points i e , the generation output that meets the current demand at minimal cost
- The participation factors that can be used to dispatch units economically for small load variations

The GDC function should be capable of executing periodically, on demand, or upon request by other programs such as AGC It should be able to handle

- Operating limits of the generators (minimum/maximum limits)
- Generator operating modes
- Heat rate curves for each unit

- Computation of incremental cost for each unit using the fuel cost and the BTU content Fuel mix options should be permitted

3.2.2.2 Scheduling and Accounting Functions

ENERGY SCHEDULING

In power systems with interconnections to surrounding systems, scheduled power and energy interchanges are referred to as transactions A transaction is characterized by the following parameters

- Name of other utility
- Transaction type
- Start date and time
- Stop date and time
- Ramp time duration or rate
- MW Amount
- Direction (sale/purchase)
- Price

The Interchange Scheduling function keeps track of transactions and accepts Operator entries of new transactions and updates to existing, transactions The net interchange, which is the algebraic sum of all transactions, should be calculated by this function and supplied to the other application functions, e g , AGC and Unit Commitment

An accounting of the hourly energy interchange should be performed and a report for the previous day should be printed after midnight for each interchanging utility

At the end of every day, all completed transactions should be printed and automatically stored in a transaction history file The transaction history file should contain data for a user specified number of days The operator should also be able to edit the data in this file in order to update and correct it

Interchange Scheduling is essentially a data entry and display function and a suitable man-machine interface should be available to assist the operator

TRANSACTION EVALUATION

Transaction Evaluation functions enable the operator to evaluate the economic costs and benefits of transactions There are two types of Transaction Evaluation commonly used Transaction Evaluation, Economy A (TEA) and the Transaction Evaluation, Economy B (TEB) transactions

An Economy A transaction is a short term transaction entered into by two utilities, for their mutual short term economic benefit

In an Economy A transaction, only the fuel costs are taken into account All costs associated with starting or stopping a unit are not considered since the unit(s) must be

on-line in any event since the utility must be able to handle possible cancellation of the transaction Economy A transactions are short term and can be canceled by either party with little notice

An Economy B transaction, on the other hand, is a long term, firm commitment to purchase or sell energy The costs associated with the start-up and shutdown of units is included in the price of the transaction When comparing Economy B transactions with Economy A transactions, several key differences should be noted

The cost basis is different. An Economy A (EA) transaction is costed solely on the basis of the difference in production cost The costing for an Economy B (EB) transaction is based on the difference in production cost and includes costs attributable to the start-up and shutdown of units

The time horizon is different. The EA transaction usually has a one hour duration and is scheduled just prior to its start time The EB transaction has a longer duration and may be scheduled for several hours to many days and is scheduled well ahead of the start time

The contractual basis is significantly different. An EA transaction is essentially a short term agreement Either side can cancel the transaction at a moments notice The price and cost benefit allocation is mutually agreed upon The EB transaction is a commitment, often with default penalties Both sides agree to the price in advance and then they see the transaction through to its completion

TEA requires only an generation dispatch calculation TEB relies on the Unit Commitment (UC) function to determine the transaction's effect on the total costs of production Phase 1 will only support the TEA TEB can only be incorporated in Phase 2 since it requires the UC function that is included in the Phase 2 applications software

TRANSACTION EVALUATION - ECONOMY A

Economy A transactions are normally made just before the beginning of the hour and have a one hour duration Of course, if the transaction is evaluated next hour and remains beneficial it may again be scheduled This may continue as long as the transaction remains beneficial to both parties

Economy A energy transactions play an important role in the optimum economic operation of an interconnected power system They allow system wide optimization without organizational changes

The TEA software determines the production cost for the next hour, given the forecast load, the scheduled transactions and status of all units TEA computes the actual incremental cost of the transaction by taking the difference between the production costs with and without the transaction

The information needed to compute the base production cost is

- on-line unit data including limits, fuel costs, etc
- system load value
- scheduled interchanges

This information may either be captured from the current real-time information or it maybe entered by the user

The TEA software should be capable of evaluating a single transaction, individually evaluating a number of proposed transactions and sequentially evaluating the additive effect of multiple transactions

The TEA function should also have a save case capability All the data within the function, both input and output, should be stored as a save case to be retrieved at a later time

TRANSACTION EVALUATION - ECONOMY B

The starting point for any TEB evaluation is a solved UC case, which provides the initial commitment schedules, unit loadings and costs The user can set up the initial case via the UC capabilities

The operator can then enter the EB transaction or transactions to be evaluated The TEB function should run the UC function with the proper combinations of transactions and produce a special TEB case.

The output data of the base case and the TEB case should be compared and TEB results generated in both summary and detailed presentation format The summary should contain hour by hour differences for

- Total cost
- Production cost
- Start-up and shut-down costs
- Unit start-up and shut-down costs
- Total generation requirements

ENERGY ACCOUNTING

The purpose of the Energy Accounting function is to produce a concise, accurate record of the energy exchanges that have taken place in the system over a specific time period, generally one day It should be presented in the form of a report that consists of at least two parts, completed transactions and a record of the scheduled versus the actual interchange that took place. The "Completed Transactions Report" records the planned interchange under each agreement and considers the total energy transfer It should include

- Name of other utility
- Transaction type

- Starting time
- Stop time
- Scheduled amount
- Transaction direction
- Transaction price

The "Scheduled versus Actual Interchange Report" should contain an hour by hour record of the planned interchange and the actual interchange that took place It should include the following items as a minimum

- The energy interchange per tie-line
- The total scheduled energy interchange
- The total metered energy interchange
- The energy interchange deviation

SHORT TERM LOAD FORECAST

A forecast of the total system load is an essential prerequisite for the optimal scheduling of the generation and transmission resources The System Load Forecast should provide an automated means for developing forecasts of hourly average and peak loads for the current day and up to eight future days A Weather Adaptive Load Forecast program is desired for the most accurate forecasts of the hourly system load for a forecasting horizon of up to 7-10 days These forecasts should be based upon actual load and weather data observed over weeks, days, and hours prior to the forecasted period The program should make use of three models

- a load forecasting model
- a weather forecasting model
- a model relating changes in weather to changes in load

With these models the program should use historical load and weather data plus predicted weather data, when available, to develop load forecasts The program should allow corrections for system conditions that affect the hourly forecast, such as holiday and known load adjustments In addition to the forecasts, the program should calculate high and low probability limits for the forecasts

To provide the best fit for the forecasting equations to the recently observed load and weather data, the models utilized should be dynamically updated to reflect actual system conditions using an exponential smoothing technique with new observations of actual load and weather

The Weather Adaptive Load Forecast program should maintain an on-line database of all information related to the forecasting function This should include

- model characteristics
- historical load data
- historical weather data
- scheduled holidays
- scheduled or known future load adjustments

The program's primary use will be in real-time to provide a forecast for use by other on-line application programs It should also be possible to use the program in an off-line mode for study purposes

The Load Forecast program should present the operator with the following information for each day of the forecast horizon By selecting a specific date, the operator should be able to review and, where appropriate, perform manual entry on the following values

- hourly load data
- hourly weather data
- indication of whether the data is observed or forecast
- hourly load adjustment
- indication of day of week
- identification of peak hour values (actual or forecast)

Historical statistical data cannot be used for load forecasting because of a rapid decline in demand since 1991

HYDRO THERMAL OPTIMIZATION (HTO)

The Short Term Hydro-Thermal Optimization function is used to develop economically optimal generation schedules for systems containing both hydro and thermal generating units Thermal coordination uses the Unit Commitment function as a subroutine to handle the thermal subproblem, thus the UC function is necessary for HTO

The optimization is usually performed on the assumption that the production cost is entirely due to the thermal production The program assumes that the hydro power resources are free and it utilizes them to minimize the thermal production cost over the entire time period of interest

The output from HTO should include

- A generation schedule for the thermal plants, including unit start-up and shut-down
- A generation schedule for all hydro plants including the Kruonis pumped hydro plant
- Optimum reservoir levels and the corresponding water values for all reservoirs at all time steps in the planning period

It should be possible to enter the MW demand to be supplied by the generating plants in two ways

- Operator entry through a CRT display

- Operator initiation of a program that, based on the Load forecast and the Interchange schedule, calculates the hourly generation needed to obtain power balance

Transmission losses should be accounted for by multiplying the MW demand by an adjustable constant The total hourly spinning reserve requirement should be input by the operator The HTO optimization problem is commonly divided into the thermal and the hydro subproblems The two subproblems are solved alternately in an iterative manner until convergence is obtained

UNIT COMMITMENT

The Unit Commitment Program (UC) determines the optimum start up and shut down schedule of thermal generating units to meet forecasted system load and scheduled interchange requirements while maintaining required reserves

UC should determine an hourly generation schedule for a specified period, up to 7-10 days, minimizing total production cost over the period while meeting hourly system load and reserve requirements subject to system and unit constraints

The generating units should be modeled by input-output data, fuel cost, and physical constraints Unit constraints such as scheduled outages, deratings, must-run times, and must-down times, should be considered during the solution

The optimization process should minimize the total cost of operation where the cost components include

- fuel cost
- start-up cost
- standby cost
- operating and maintenance costs

The optimal commitment schedule provides a start-up and shutdown schedule for each generator, as well as the loading of each generator for each hour of the study period

The generating unit model in the Unit Commitment program should take into account

- derating
- fuel costs
- start-up costs
- standby cost
- input-output data
- maintenance schedules
- minimum down-time
- minimum run-time
- operating and maintenance data
- start-up time
- unit output limits (economic, operating, and emergency)
- combined heat and power units

The system model should be comprised of the following components

- system load
- system interchange schedules
- reserve and margin requirements
- generation units
- area generation restrictions
- transmission loss sensitivity factors

The total system load can be obtained from the load forecast program or manually entered or updated by the System Operator

3.2.2.3 Network Analysis Functions

OPTIMAL POWER FLOW WITH VOLT/VAR SCHEDULING

The Optimal Power Flow should determine a system operational state that minimizes an objective while meeting specified constraints The program will normally be used to determine the settings of controllable devices to meet a certain objective while maintaining a secure network The objective could be to

- minimize the cost of producing power by generation and purchase
- minimize power losses on the network

A secure network implies that no network violations, such as transmission overloads or voltage problems, exist in the present network state The optimal power flow solution should be able to be constrained to maintain security in the present network state

It should be possible to group and prioritize the controls to be employed in the optimization solution in order to incorporate engineering judgment Controls can then used in priority order to arrive at the optimal solution

The current real-time network model or any other case stored in the database case file should be able to serve as the base case for an optimal power flow solution

The reactive power scheduler should utilize the optimal power flow calculation for optimizing reactive power controls and satisfying other system operating constraints The on-line reactive scheduling calculation should be run as part of a real-time suite of power system applications initiated cyclically or on operator demand As with all advanced applications, the reactive power scheduler/optimal power flow should also function in an off-line study mode using a save case.

In the on-line mode, the reactive power scheduler utilizes the following input data

- Predicted active and reactive demands
- Network configuration and parameters
- Generating plant schedule and expected loads
- Permitted generator operating regions in active/reactive power output planes

- Availability of reactive compensating devices (e g , shunt capacitors)
- Transformer tap options
- System voltage limits
- Other security and operational limits

It should be possible in the optimizing calculation to select and minimize one of the following

- generation cost
- active power losses
- voltage deviation

Depending on the operator's selection of the objective and the constraints he has imposed, the reactive scheduler should determine the settings for the controllable devices and present them for the operator's use in controlling the power system

The reactive schedule shall satisfy the following operational constraints

- User specified voltage limits and stability margins
- Generator MVAR output limits
- Circuit flow and other security limits
- Generator MW output limits

The control variable schedule shall include the following

- Generator MVAR set-points
- Multi-step reactive compensator switch positions and settings
- Transformer tap positions

STATE ESTIMATOR

The EMS network application programs require a consistent and reliable description of the current load flow (State) of the power system Measurements telemetered to the control center contain both process and measurement errors The scheme for processing real-time noisy measurements to yield an improved description of the current state of the power system is called State Estimation.

The state estimation should make maximum use of all information available and should contain an observability processing function in order to determine observable and unobservable areas

The state estimation software should include extensive mechanisms to produce more reliable state estimates Measurement filtering should be supplied to reduce the influence of excessive process fluctuations and the effects of measurement time skew. "Bad data" points should be identified and suppressed

The state estimation program should, as a minimum, provide the following functions

- Determination of observable areas
- Measurement filtering

- Detection and rejection of "bad data"
- Estimation of node voltages
- Filtering of measurement residuals
- Determination of the quality of the estimates
- Individual limit checks of estimated values
- Updating of measurement accuracy parameters

CONTINGENCY ANALYSIS

Contingency Analysis (CA), should simulate the effect on the power system of various credible contingencies The CA function can execute in the real time mode or in the study mode In the real time mode, CA starts from the current real-time operating state, and determines the new state after a contingency has occurred Possible violations of security limits should be detected and the operator notified All contingencies specified in a predefined contingency list should be evaluated

The number of possible contingencies in a power network can be very large and the computational burden associated with CA can thus become prohibitive Furthermore, it is difficult for operators and planners to ensure that all outages of interest have been correctly identified and assigned the appropriate priority Therefore, a fast, approximate screening procedure should be used to minimize the number of contingencies evaluated in detail by the CA function

The contingencies that lead to violations can be studied in more complete detail by using the Power Flow (PF) program In the PF, the operator can apply the contingencies to the network and obtain a full load flow solution Thus, the main purpose of the contingency analysis function will be to

- Provide assistance to the operator in achieving secure power system operation during steady-state operation.

- Provide assistance to the scheduler in preparing production and outage schedules

Two different execution modes should be available for the CA function

- Real-time mode.
- Study mode

The CA function can be executed

- As part of the real time sequence
- Automatically after topology changes
- Periodically
- Upon Operator request

In the study mode the CA function executes on demand only and can have a different contingency list. The contingency list should be operator specified through convenient data entry methods The outaged equipment can include

- Line/transformer
- Compensator/reactor
- Generator

A contingency case can consist of multiple equipment outages Each case should be associated with a priority index which can be used to group the cases that should be evaluated

For generator outages, the lost generation must be reallocated to the remaining generators using a set of distribution factors

The following quantities should be checked for limit violations

- Active Power
- MVA
- Bus Voltages

A Severity Index for ranking the severity of a contingency should be calculated for each contingency This ranking, which measures the relative effect of the contingency, can be used to re-define priority orders to ensure that the most severe outages are included in the evaluation

The man-machine interactions of Contingency Analysis should consist of

- Display for specifying contingencies
- Output and Results Displays
- Contingency Analysis Control Displays

SHORT-CIRCUIT ANALYSIS

A Short-Circuit Analysis (SCA) program for on-line computation of short-circuit current due to symmetric three-phase zero impedance faults is required

The SCA programs can be limited as follows

- Only symmetric three phase faults need be considered

- The faults occur only at network nodes and not within branches

- Only one limit needs to be tested for calculating limit violations

The results calculated by the function should include the short-circuit current at the node where the fault occurs and the current through each of the components connected to this node The voltage at the immediate neighboring nodes should also be calculated Fault currents and voltages at the far ends of lines and transformers connected to the faulted node should be obtained by using the actual voltage profile

Limit monitoring should be performed after the completion of the calculations

Execution Modes should be provided for real-time short-circuit calculation and for study-mode use of the same software In the real-time mode the short-circuit analysis should be initiated automatically after a change in the topology of the network It should also be possible to manually initiate the function and block its automatic operation

A means of initiating the function from another application program is also desirable

3.2.2.4 Training Functions

TRAINING SIMULATOR

A Training Simulator is used for training operators in management of power system and operation of the control system The simulator should be able to provide a preprogrammed training session for a trainee or provide an interactive training session, monitored and controlled by an instructor, for one or more trainees

The instructor should be able to create and test both types of session interactively with the simulator software The simulation software should allow the storage of multiple scenarios of both types As a minimum, the operator training simulator should allow for two distinct modes of operation, scenario definition and training mode

The first mode, scenario definition, should consist of defining the conditions that exist in the system at the beginning of the scenario, the changes in system conditions to take place during the training scenario and the time schedule for preprogrammed changes from the beginning to the end It should be possible to save the entire scenario under a specific identity for subsequent replay during the training mode

In the second mode, the simulation or training mode, the simulator should present the training scenario in a realistic manner showing the load and generation developing over time in the network Pre-programmed events should appear to take place and the simulator should react to operator entries as the system would All trained activities should be stored as a record of the training session and for future analysis

The software should be able to simulate pre-programmed events using a time trigger that is relative to the simulated start time. When the simulation mode is active, all disturbances activated from the instructor's console should be simulated As a minimum the following types of events should be possible to define and simulate

- Measured Value Change
- Load Data Change
- Equipment Fault
- Power System Fault

The simulation software should support the time related storage of each action taken by the operator via the control system This information should be available for reference and also in a form that will enable the instructor to rerun the sequence and display the operator actions during the training session

The simulation software should model power system objects in a realistic way to duplicate actual system operation by modeling

- Power System
- Load Models
- Power System Components
- Protective Relaying
- Control System Actions

The training simulator should allow the instructor to stop the action of the scenario, go back to a previous point and restart the action for the purpose of demonstration and discussion The instructor should be able to choose the time when the replay of the scenario is to begin He should be able to change the time of events or suppress events during the playback The instructor should have the choice of whether to replay the operator's actions or to enter them again during the repeated simulation

3.2.3 DC Vilnius Hardware and Facility Requirements

While it is too restrictive to name specific hardware in a feasibility study, it is possible to recommend certain types and families of hardware that are the most likely to provide a suitable platform The purpose of this section is to present the characteristics of hardware that has already been included in effective SCADA/EMS applications The presentation reflects the characteristics of the system being recommended for LSPS specific needs

3.2.3.1 Hardware Requirements

The study team recommends the upgrade of the DC Vilnius Data Acquisition system by migrating the existing system to a full SCADA by the addition of hardware and "off-the-shelf" SCADA software It is further recommended that the overall control system network structure be kept in place and that the data from the remote sites be collected by the Enterprise SCADAs and forwarded to DC Vilnius

The Servers are the heart of the system and there should be two or more that contain the database and the SCADA functionality These machines should be equipped with at least a Gigabyte of disk to contain the operating system, SCADA software, Power Application Software (PAS) software and databases They should be the best available in their class in order to perform the critical server functions efficiently

Two Applications Servers should be supplied to insure that the system does not become overloaded These servers should also be top of the line machines equipped with a minimum of 500 Mb of disk to contain the operating system, additional application programs, and interim storage capacity

Six Man-Machine Workstations are recommended to supply the user interface function for the operators, engineers, trainees and visitors It should be possible to locate these units anywhere in the building and not only in the control center The units

should be reasonably powerful and should be equipped with minimum 19 inch CRTs with a resolution of at least 1280 x 1024 pixels The hardware that controls the units should be capable of full graphic presentation of at least 256 colors

An Ethernet or Token Ring LAN should connect the processors, allowing high speed communications to and from the servers and between all units on the network The LAN supplied should be fully compliant to the appropriate standard (ISO 8802 3 CSMA/CD (Ethernet) or ISO 8802 5 for Token Ring) These standards are supported by all forms of UNIX and by most manufacturers of PC LAN software

A multiplexer or gateway processor should be supplied if required to interface to the RTUs and the remote centers This machine should connect directly to the Ethernet and should be accessible to both the primary and backup versions of the polling software It should allow direct connection to the RTUs and general purpose serial communications between the DC Vilnius center and other centers

The Novell interface will allow LSPS to keep the extensive man-machine capability that they have implemented during the transition phase They may elect to modify this capability later by adding graphic representation, generalized databases and tools or they may decide to replace it Either way, it will remain quite useful during the implementation and development resources can be concentrated on the SCADA/EMS functionality The hardware chosen should provide a straightforward interface to the existing Novell server

The RTUs, whether connected to an ENE or directly to DC Vilnius are considered a hardware upgrade RTUs can be added to DC Vilnius after the SCADA software is installed The addition of RTUs to an ENE requires that the SCADA software be installed at DC Vilnius and at the ENE where the RTU is added The addition of 25 new RTUs in strategic locations is recommended The SCADA software should have the ability to selectively route the data supplied by the RTUs to the LSPS database in the Novell server for presentation on the existing man-machine system

In many cases these RTU's will replace existing MKT-2 units Because of the increased capacity of the new RTUs it may be possible to replace more than one existing unit with a single replacement unit The RTUs will be able to communicate with either an ENE, DC Vilnius or both It is highly recommended that additional RTUs be purchased as soon as possible to replace the remaining old type RTUs Even though the system will converse equally well with MKT-2 units and the new RTUs the higher cost of maintenance and limited capability of the older MKT-2s are still a factor Replacement of DC Vilnius' directly connected MKT-2 units will require only changing only the termination of the incoming line at the center. RTUs can be added to an ENE after its SCADA software has been installed and checked out

3.2.3.2 Facility Requirements

The facilities required for the recommended system are as stated below Since LSPS is replacing existing systems which have a much larger space requirement than that will be required for the new system, there should be no problem with placing the new system within the existing facilities

In the recommended configuration each pair of servers requires approximately (2 M^3) Desk mount, pedestal (tower) cabinets or 19 inch rack mounting are available The power requirements are approximately 300 Watts per unit and 150 watts per screen Thus, the power for the recommended system would be approximately 3000 Watts for the computers and 900 Watts for the CRTs Standard office wiring with local surge protection should be sufficient for this hardware

The recommendation assumes that LSPS can use existing equipment to supply uninterruptable power for the new systems with existing equipment If this is not the case, additional funds should be allocated for an uninterruptable power supply

Since the system will be installed in parallel with the existing hardware, for some period of time, the facilities should be able to accommodate both the power requirements and the space requirements in addition to what exists now Eventually, only the new equipment will remain and this added requirement will only apply to the transition period

3.2.3.3 DC Vilnius Backup Requirements

In the last decade in the U S , it has become increasingly common for utilities to establish a backup SCADA/EMS for critical centers at the level of DC Vilnius The concept of the backup center is simple Some portion of the hardware and software complement of the center is implemented at a second location If there is a catastrophic event making it impossible to use the main center the backup center may be staffed with operations personnel and the system may continue to work at the same or a slightly reduced level of efficiency In order to fulfill this function, the backup center should have access to the same remote equipment as DC Vilnius and should be able to run the same application programs or at least a subset of them

Should LSPS decide that such a center is justified, it is recommended that it be placed at one of the ENEs It should be located within reasonable traveling distance of Vilnius so that trained operating personnel can get to it in the shortest possible time Operating personnel should be trained to operate from that location so that they are familiar with the location and any differences in the two centers

3.3 ENTERPRISE DISPATCH CENTER REQUIREMENTS

3.3.1 ENE Center Functions

The ENE centers have the same basic SCADA requirements as those of DC Vilnius except on a smaller scale The basic SCADA capability and software functions required are summarized here for convenience Additional functionality is required to enable the ENE SCADA to store and forward RTU data to DC Vilnius Control capability should be expanded to be able to receive control operation requests from DC Vilnius and relay them to the RTUs

3.3 1 1 Basic SCADA Functionality

The system functions should consist of a comprehensive SCADA capability and the special functions required to participate in a multi-tiered distributed system

The ENE operators should be able to perform the following functions for the portion of the SCADA system for which they have responsibility

- Control System Devices through RTUs
- Activate or Deactivate Communication Channels
- Activate or Deactivate RTUs
- Tag System Devices (Out of Service)
- Modify Analog Point Limits
- Acknowledge Alarms
- Manually Enter Data
- Interact with Application Programs
- Manage CRT Pages (Selection, Freeze, Print)
- Page and Scroll Displays
- Use the System Editor (Database and Equipment Definition)
- Generate and Schedule Reports
- Set System Date/Time
- Edit Passwords
- Trend Data on Pen Recorders and CRTs
- Analyze Disturbance Data

The system should be based on a modern, widely used operating system with a modern and efficient windowing interface The standard software should supply the network management which allows file sharing and program to program communication among all the computers and programs on the LAN The Combined system should provide a low cost, widely supported state- of-the-art platform with the expansion capability to provide for LSPS present needs and future expansion of 500%

The SCADA software should consist of modules which operate in the server, the MMI workstations and the applications servers The system modules should provide an interface to all application programs through a well documented interface consisting of a set of generally available routines which are called by each application program to interact with the system database and/or the RTUs The following specific software packages or their equivalent should be supplied

- Man-Machine Interface
- Polling System
- Alarm System
- Event System
- Calculation Package
- Historical Data Function
- Logging and Reports
- System Maintenance Capability
- System Display Pages

For a detailed description of these capabilities see Section 3 2 1 DC Vilnius SCADA Functions The same capabilities should be supplied and the software should be purchased from the same vendor for the most economical maintenance and training

3.3.1 2 Store and Forward Capability for the RTU Data

In a multi-tiered distributed system the need exists to acquire data at one level in the system and transfer that data to other levels In the case of LSPS the requirement is to acquire data from the RTUs directly connected to the SCADA system in the ENE, make that data available to the operator at the ENE and also forward it to the SCADA system at DC Vilnius There are several methods of doing this One is to periodically send all data from the lower level SCADA system to the higher level whether it has changed or not A second is to send only the changes A third is to make the lower level system look like a large RTU to the upper level system Any of these methods will meet the LSPS data transfer requirements if the line speeds are upgraded as described in Section 3 2 2

3.3.1.3 Receive and Relay Requests for Control Operation

In addition to forwarding data to DC Vilnius, the ENE SCADA system must be able to receive control command messages from DC Vilnius and forward them to the appropriate RTU as a properly formatted control command The way in which this is done will depend on the SCADA system selected, but most have a method of accomplishing it

The capability is also required to accommodate the power system application programs (such as AGC) that need to send control commands to the RTUs frequently Since the authority to control the system is generally granted by password recognition the programs that receive and act on the control commands will have to be given the required authority Likewise, the software that performs this function will have to have a high level of security built into it The system must protect against the possibility that an unauthorized person or a simple accident can result in inadvertent execution of control commands.

3.3.2 ENE Hardware and Facility Requirements

The ENE systems currently installed are of several different types These should be replaced by a standardized configuration that utilizes the same SCADA software as DC Vilnius The hardware complement for these centers should be small in the beginning but should have the ability to grow with field installed upgrades

3.3.2.1 Hardware Requirements

The hardware should be in the same family as the DC Vilnius system but a small version may be used to match reduced computational and storage requirements Two identical machines should be supplied to serve the roles of servers and man-machine terminals (GUIs) The two machines supplied should each be able to assume the role of both primary and backup server while fulfilling the role of one of the two Graphic User

Interfaces In the basic configuration there should be two computers connected in a hot standby configuration with each machine able to address the field equipment and act as a server should the other fail The hardware should support a server failover task with the necessary switches or multiplexers to support the change of roles in real-time Figure 3 2 shows the recommended hardware configuration

3.3.2.2 Facility Requirements

The recommended configuration will fit easily on a tabletop (2 M^2) if desk mount cabinets are chosen or under the table holding the CRTs if pedestal (tower) cabinets are chosen The power requirements are approximately 300 Watts per cabinet and 150 watts per screen Thus, the power for the recommended system would be approximately 900 Watts Standard office wiring with surge protection should be sufficient for this hardware

The recommendation assumes that LSPS can supply uninterruptable power for the new systems with existing equipment If this is not the case, additional funds should be allocated for an uninterruptable power supply

Since the system will be installed in parallel with the existing hardware for some period of time, the facilities should be able to accommodate both the power requirements and the space requirements in addition to what exists now Eventually, only the new equipment will remain

3.4 RTU FUNCTIONAL REQUIREMENTS

One of the most important components in a modern SCADA/EMS is the RTU The capabilities and flexibility of the RTUs have a great influence on the capabilities and flexibility of the total system Modern technological advances have made it possible to purchase RTUs at a reasonable price which provide not only sophisticated input/output capabilities and secure control of power system devices, but also intelligence which allows them to be more flexible in the communication protocol and precise time resolution of events

History has shown that RTUs have almost always outlived the computer system to which they were connected With this in mind, the RTUs should have a demonstrated, reliable product design, specifically intended for use in the electric utility industry Service and replacement parts should be guaranteed for a period of at least 15 years

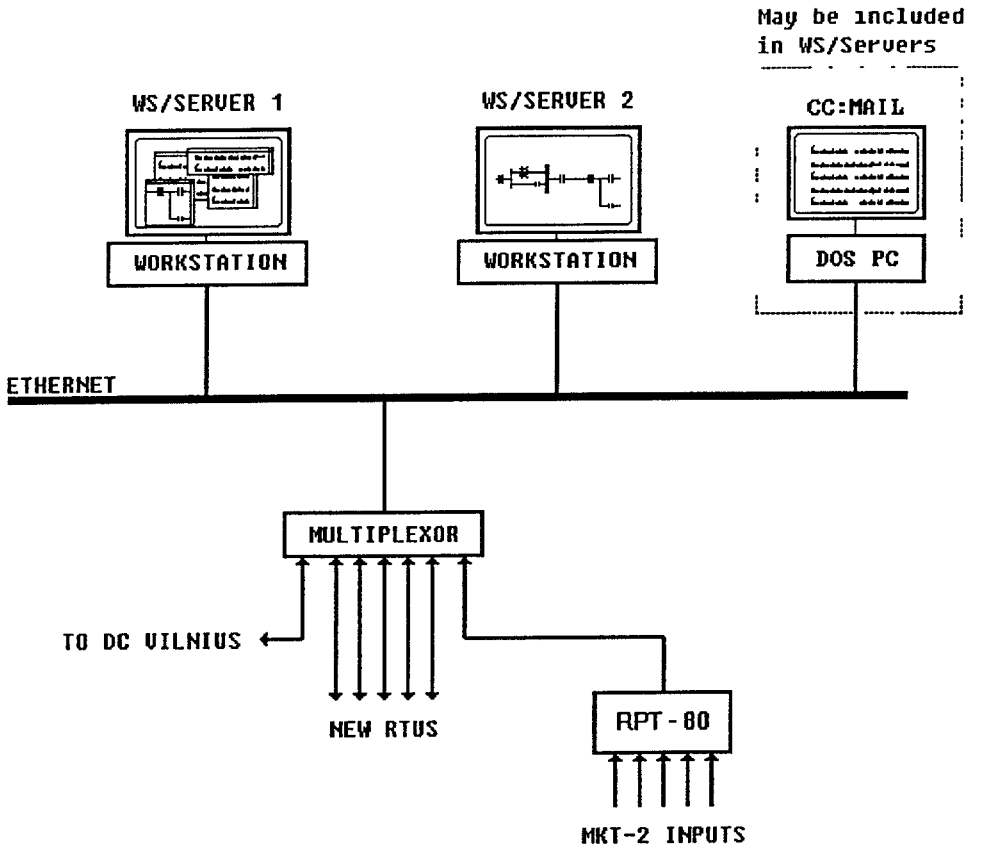

FIGURE 3.2 ENE HARDWARE CONFIGURATION

Since it is generally more economical to purchase RTUs in large groups having the same characteristics, LSPS should set up a system maximum requirement and an average requirement for the capabilities and point counts of the RTUs When purchasing the RTUs the vendor should be instructed to quote RTUs configured for the average requirement, but with enough cabinet space and connection capability for the maximum requirement The RTUs should be field expandable from the average to the maximum size

3.4.1 CPU/Memory

The RTU should be of the latest technology, incorporating at least a 16-bit microprocessor as its basic logical unit The design should provide real-time hardware interrupts so that the microprocessor can support real-time dynamic functions The micro-processor common logic section should include Random Access Memory (RAM), Erasable Programmable Read Only Memory (EPROM) and Electrically Erasable Programmable Read Only Memory (EEPROM) The RTU operating system and communications firmware should be provided in EPROM This software should not be field modifiable an any way except by EPROM replacement All owner defined parameters such as RTU station address, communication parameters and RTU configuration, should be held in non-volatile Electrically Erasable Programmable Read Only Memory (EEPROM) These parameters should be entered with a standard programming terminal and should be easily changed by a technician in the field using interactive configuration firmware None of the user enterable parameters should have to be reentered by the user in the event of a normal power failure Random Access Memory (RAM) should only be used for storing dynamically changing data and not RTU control parameters

Report by exception and forced scan of both analog and status data should be supported by the RTUs It is preferred that the changed data be entered in one or more files at the RTU and all changes be sent to the host when requested This would mean that several changes for the same point could be stored In the case of status this eliminates any special consideration for more than one change within a scan cycle

Sequential event logic should be included in the RTU software It should be possible to store sequential events and their time of occurrence in a file in the RTU for subsequent transfer to the host It should also be possible to read time from an external source and reset the basic RTU clock and any special clocks used in the time tagging of the sequence of event data

3.4.2 Communications

The RTU should provide for multiple communication paths and have the ability to communicate with multiple hosts if necessary It should also be possible to connect the same RTU to the host computer using two communication lines The RTU should appear to be the same regardless of which of the redundant communication links the host chooses It should also be possible to connect a "dumb" terminal or a PC emulating a terminal to the RTU in order to set the configuration Communications speeds of 300 to 9600 bps should be supported by the RTU for all channels Adding

channels in the field should be possible without changes to the RTU internal wiring The RTU should support multiple RS-232 communication interfaces or CCITT V 23 modems installed within the RTU with no external power required

3.4.3 Analog Inputs

The RTU should include a digital to analog conversion capability which enables it to sample multiple electrical analog input signals and convert them into a digital signals suitable for sending to the master station A single A/D converter and a modular multiplexer is acceptable provided it meets the following technical requirements The resolution of the converter should be 12 bits or better and the overall accuracy should be 0 15% of full scale over the temperature range -20 to +50°C Reference voltages for 90% and 100% of full scale should be built in allowing the host to check the accuracy of the A/D converter periodically

All analog inputs to the RTU should be converted at least once per second The analog inputs should be differential type Two unique terminals per point should be provided (+ and -) A ground terminal for the electrical shields should be provided for every two input pairs All standard input ranges (+5VDC, 0-5VDC, 1-5VDC, +1mA, 0-1mA, 4-20 mA, 10-50 mA) should be available The appropriate range should be determined by LSPS before purchasing each RTU

3.4.4 Analog Outputs

Analog outputs should be provided in the RTU and the standard output ranges(+10VDC, +5VDC, 0-1mA, 4-20mA, 10-50mA) should be available Analog outputs are generally used as setpoint values for controllers of power system devices The digital resolution of the input should be at least 12 bits The analog outputs should be optically isolated up to 1500VDC The accuracy of the analog output signal should be within 0 15% between temperatures of -20 to 50°C

3.4.5 Digital Inputs

Digital input capability should be provided on a modular basis with a first block of at least eight points It should be possible to add additional points in groups as small as 16 points Each input point must have two input terminals and the RTU must supply a DC "wetting" voltage which will be used to determine the contact position of the input contacts The digital inputs should be optically isolated up to 1500VDC Contact inputs must be equipped with debounce circuitry and/or software

3.4.6 Accumulator Inputs

A common method of obtaining watt-hour data is to use digital pulses In order to convert these pulses into an energy value the RTU must have the ability to accumulate or count the pulses Generally, the host sends a command to all remote terminals to freeze the pulses and then reads the accumulated values The hardware in the RTU must continue to accumulate pulses during the time the freeze and acquisition are going on and the newly accumulated pulses must be added to the next value for subsequent transfer. There is generally a distinction between low speed and high

speed pulsed input equipment because the lower speed pulses can be acquired and processed much more simply than high speed pulses The RTU, in any case, should be able to accommodate both as optically isolated digital inputs

3 4.6.1 Low Speed Accumulators

The RTU should be able to accommodate low speed counters of up to 20 pulses per second It should be able to resolve the difference between a two count input cycle and a single count input cycle as a result of a user entered configuration parameter Accumulator inputs must be equipped with contact debounce circuitry and/or software

3.4.6.2 High Speed Accumulators

The RTU should be able to accommodate high speed counters for the range of 20 pps up to 10k pulses per second It should be able to resolve the difference between a two count input cycle and a single count input cycle as a result of a user entered configuration parameter Accumulator inputs must be equipped with contact debounce circuitry and/or software The input filtering should be hardware selectable to fit different portions of the input speed range

3.4.7 Digital Outputs

Digital output capability should be provided by the RTU to present a timed contact closure output for the purpose of controlling a pulsed device or providing a single output to a two state device controller The time duration of the output pulse should be controllable by a count contained in the control command sent by the host

3.4.8 Control Outputs - SBO

Control outputs are similar to digital outputs except that they require two steps to complete an operation The select step should take place with the sending of a select message by the host and the return of a response message from the RTU indicating the selection has been made The next step, execution, requires an execute message from the host for the same point and a response message from the RTU indicating that the control has been accomplished The complete sequence is called Select Before Operate (SBO) The RTU should be equipped with two relays for each control pair (open/close) and should be able to selectively close the appropriate relay for the point and function requested whenever it receives a valid SBO/execute sequence

3.4.9 Sequence of Events Inputs

Sequence of events is the ability of the system to make an accurate chronological record of multiple events within the power system, saving both the event and the time it occurred at a high resolution The sequence of events function requires special software and hardware in the RTU to be able to collect and store the information It also requires a special software function to return the information to the host in an organized manner

The RTUs should have the ability to collect sequence of events information at both a 5 millisecond and a 1 millisecond rate The events must be time tagged at the leading edge of the pulse or transition and the time stored with the new value of the input The RTU should be able to store up to 512 events locally It should have a method for detecting that events have been stored and the ability to read back all the events at one time or to divide them into shorter groups and intersperse them with other RTU traffic

3.4.10 Power and Environmental Requirements

The RTU, in its standard form, should have the capability to accept 240 VAC or 120 VAC as its input power With optional hardware it should be able to operate on 129 VDC, 48 VDC or 12 VDC The power requirements for the unit should be under 15 watts in its maximum configuration

The operating temperature of the RTU should be - 5°C to + 55°C It should be able to operate in the 5% to 95% relative humidity (non-condensing) range All field connections should be able to pass the IEEE 472-1974, ANSI C37 90-1979(R1982) surge withstand tests

3.5 EMS COMMUNICATIONS SYSTEM REQUIREMENTS

The current communication system combines voice grade communications and digital data capability on the same line This causes limitations on the bandwidth available for digital data While it is possible to live with this limitation on the direct RTU communications channels both at Vilnius and at the ENEs, it will not be possible to operate between Vilnius and the ENEs on this limited bandwidth

The current data being transferred to DC Vilnius from each of the ENEs is summarized below The table shows quantity and type of data and the estimated time required to transfer all the data to DC Vilnius at each of four communications rates The column headings TS and TM are the number of status and measurement points respectively

				Seconds to Return Data at			
Center	TS	TM	Total Bits	200bps	300bps	2400bps	9600bps
Klaipeda	127	58	1472	7	5	62	15
Alytus	114	89	1936	10	6	81	20
Kaunas	265	212	4512	23	15	1 88	47
Vilnius	203	151	3280	16	11	1 37	34
Utena	73	94	1856	9	6	.77	19
Panevezys	101	82	1760	9	6	73	18
Siauliai	156	101	2288	11	8	.95	23

The table shows that for the initial system, with no data by exception techniques, the system would be very slow if only a 200 bps line were connected from each remote

center to DC Vilnius At the 300 bps rate the system is more acceptable, but would be improved by increasing the rate of the lines from Kaunas and Vilnius ENEs

While the average transmission times can be reduced with exception reporting techniques, they will still be too slow for AGC data They will also not support the surges of data during system outages and the anticipated increase in data volume as the system is upgraded

Therefore he communications system should be reconfigured and upgraded as follows

- Two 9600 bps channels between DC Vilnius and each of the ENE centers
- Two 300 baud channels between the ENE center and each of the new RTUs installed
- Two 300 baud channels between the DC Vilnius center and each of the directly connected new RTUs

4. BENEFITS OF UPGRADES

The benefits of the installation of a modern EMS and the attendant improvements to the communication system fall into several categories

- Cost savings due to improved efficiency, improved manpower utilization and reduced maintenance costs
- Increased potential revenues
- Avoided cost of outages
- Deferment of capital investments
- Earlier participation in UCPTE

Some improvements in operation and maintenance result directly from the increased efficiency and user friendliness of a modern EMS However, there are many aspects of a well engineered system which contribute greatly to the efficient operation of the power system The open nature of the system and its modern reporting tools will provide a highly adaptable vehicle for the dissemination of information to management and to other decision making departments within the utility A modern EMS will have an advanced full graphic man-machine capability which will improve the ergonomics of the workplace and the efficiency of operation Modern open systems also provide built in diagnostic capability and fault location features to allow efficient maintenance of the system While these intrinsic improvements are not specifically quantified, they are of significant value and should not be overlooked as primary benefits of the recommended upgrades

Reduced maintenance costs, improved efficiency and improved manpower utilization are based on a projection from the operation and maintenance data supplied by LSPS

The savings from deferred capital investments in power system equipment are difficult to assess because of the uncertainty in the growth of the utility's future load during this period of change in the Lithuanian economy Earlier participation in UCPTE is also thought to be critical for LSPS' future but is likewise difficult to quantify in monetary terms We have, therefore, justified the recommended upgrades solely on fuel cost savings during a fixed three year period from 1995 through 1997

4.1 ECONOMIC JUSTIFICATION

The study team has justified the implementation of the system on the basis of increased power system efficiency In short the system will be operated more efficiently, losses will be reduced and fuel efficiency will be increased These fuel cost savings may be expected from the installation of a modern SCADA/EMS which provides Generation Control Programs, Scheduling and Accounting Programs, and Network Optimization Programs In calculating these cost savings, we have assumed a

realistic scenario which covers the years 1995, 1996 and 1997 The justification for the loan is the savings only during this period The figures are based on the World Bank Report No 11632-LT, May 4, 1993, entitled Lithuania Power Demand and Supply Options The report presents ten cases which project the cost of operation of the LSPS power system through the year 2000 Cases 4 and 7 were chosen and embody the following assumptions

ITEM	CASE 4	CASE 7
Ignalina Retirement	2000	2010
Ignalina Unit Shutdown	1995-1996	1995-1997
Fossil Fuel Prices per million BTU "Base"	$3 50	$3 50
Economic Reform Scenario	Slow	Slow
Fossil Fuel Cost 1995-1997 in millions of U S dollars	194	275
Phase 1 savings in millions of U S dollars	7-11	11-16

The operating experience of utilities having installed a modern EMS has demonstrated savings associated with the applications programs recommended. The average savings to be expected in percent of total fuel costs are

1 Generation Control Programs - Automatic generation control and economic dispatch programs will reduce the cost of production by 1% The addition of contingency analysis and short circuit analysis in Phase 2 will result in a further savings of 1% of the fuel costs due to the ability to operate closer to the limits

2 Scheduling and Accounting Programs - The energy scheduling, transaction evaluation and energy accounting programs will result in savings equivalent to 3% of the fuel costs The addition of short term load forecast, hydro thermal optimization and unit commitment programs will result in an additional savings of 2% to 5% of fuel costs

3 Network Optimization Programs - Load flow and state estimation programs will result in a higher system security (a reduction in cost of outages) and higher quality measurements through the recognition and correction of faulty measurement equipment The total savings are estimated to be less than 1% of the cost of fuel for Phase 1 The increased savings with the voltage/var scheduling and the optimal power flow combined will be an additional 1% of the cost of fuel based on loss minimization and improved voltage/var control

Based on the above numbers, and experience with other systems, we estimate the total savings for Phase 1 will amount to 4-6% of the fuel costs, which at the low end, i e , Case 4, are $7 million over the three year period 1995-1997 Note that, for Case 4, one of the two units at Ignalina is shut down for two of these three years For Case 7, where effectively one unit at Ignalina is shut down for the full three years, the minimum expected savings is $11 million The additional savings realized from Phase 2 will

amount to 3% of the fuel costs, or a minimum of $5 million The minimum savings to be expected are depicted below using the numbers for Case 4

	Case 4 Gross Savings	Costs	Net Savings
Phase 1	$ 7 million	$1 4 million	$5 6 million
Phase 2	$ 5 million	$0 7 million	$4 3 million
Total	$12 million	$2 1 million	$9 9 million

The total repayment period of the investment, assuming installation is completed by early 1995, would be less than three years for Phase 1 The total payback time for Phase 2 would also be less three years, which would allow one year for procurement, integration, and installation before two years of operation

4.2 INTANGIBLE BENEFITS OF THE SCADA/EMS

The study team has provided a reasonably priced recommendation for upgrading the LSPS system to a modern SCADA/EMS installation It has been demonstrated that the installation of this system in a timely manner will produce cost savings far in excess of the price of the system There are, in addition to these economic benefits, other benefits which cannot be quantified in monetary terms It is important to understand that these factors, in the area of risk reduction and overall company improvement, should also be considered in the decision to acquire an improved system

This system represents the first step in a more comprehensive and detailed understanding of the Lithuanian power network The advanced power system applications programs, State Estimation, Optimal Power Flow and Contingency Analysis provide information about the power network which was not previously available Some of the important tangible benefits that can be expected from this increased knowledge are

- Improved, better informed operating decisions
- Timely and reliable information for exchange with neighboring utility companies
- Consistent, accurate historical data for engineering and planning staff
- Reliable, early detection of power system equipment malfunction
- More accurate data for transaction billing

The major improvements will be in the quantity, timeliness and accuracy of data about the system which will be constantly at the operators disposal

The man-machine system will, in itself, make it easier to access and use the data The operator will not only be able to see more information about the system, he will be able to perform analysis of that data, on line, to help him in his operating decisions The modern windowing approach of today's SCADA/EMS allows the operator to view a system one line diagram the alarm list and one or more data analysis or advisory

screens at the same time Access to the software tools which are used in day to day operations is simple and straightforward, requiring only a pointing device (mouse or trackball) The full graphic nature of the displays also allows the operator to view much more information on a single screen Displays can be made to show detailed concepts accurately, taking advantage of a wide choice of colors and pixel level detail to convey information

5. BUDGETARY ESTIMATION OF PROJECT COSTS

The budgetary estimates presented here address two phases of upgrade to the current system The first phase adds a modern EMS capable of serving LSPS' needs for the next 10 years The second phase allows for the addition of advanced power system application programs

5.1 PHASE 1 BUDGETARY ESTIMATES

DESCRIPTION	TOTAL (U S DOLLARS)
Consulting Services	$153,000
Electric Utility SCADA System 2 SCADA Server Workstations 2 Communications Workstations 6 Man-Machine Workstations 1 SCADA Software Package	$330,000
Software Applications Packages (Not Integrated)* Generation Control Programs 1 Automatic Generation Control 1 Economic Dispatch Calculation Scheduling and Accounting Programs 1 Energy Scheduling 1 Transaction Evaluation 1 Energy Accounting Network Analysis Programs 1 Optimal Power Flow with Volt/VAR Scheduling 1 State Estimator	$250,000
Enterprise System Upgrades 7 Small SCADA Systems (Not Integrated)*	$805,000
RTU Upgrade/Replacement 25 Programmable RTUs, Modems, etc	$380,000
Trend Chart Recorders Net Interchange Frequency Ignalina Elektrenai Kruonis (Pumped Hydro)	$50,000.
Implementation, Training and Verification	$265,000
Total Phase 1 Budgetary Price	$2,233,000

*NOTE Integration of software will be supplied by LSPS

Phase 1 LSPS Local Labor Content

Activity Description	Man-hours
Specification and Procurement	2,000
Project Management LSPS Labor	2,000
Training LSPS Labor	2,000
System Installation LSPS Labor	9,600
Verification LSPS Labor	1,000
Phase 1 Total LSPS Man-hours	16,000

5.2 PHASE 2 BUDGETARY ESTIMATES

DESCRIPTION	TOTAL (U S DOLLARS)
Consulting Services	$60,000
Electric Utility Advanced Applications Network Analysis Programs 1 Contingency Analysis 1 Short Circuit Analysis Scheduling Programs 1 Short Term Load Forecast 1 Hydro Thermal Optimization 1 Unit Commitment Training Programs 1 Training Simulator	$550,000
Implementation, Training and Verification	$100,000
Total Phase 2 Budgetary Price	$710,000
Total Phase 1 and 2 Budgetary Price	$2,943,000

Phase 2 LSPS Local Labor Content

Activity Description	Manhours
Specification and Procurement	4,000
Project Management	2,000
Implementation Consulting	3,000
Training	1,000
System Installation	3,500
Verification	1,000
Phase 2 Total Manhours	14,500

6. EMS IMPLEMENTATION AND STAFFING

6.1 GUIDELINES FOR PROCUREMENT

The procurement of a SCADA/EMS is a complex task which requires detailed planning and scheduling This procurement is a special case because the integration and final testing of the completed system will be done by LSPS in Lithuania This chapter provides some recommendations as to how to organize the tasks and insure that the system will go in smoothly It is further recommended that LSPS contract with a qualified consultant with experience in project implementation to assist in the procurement and integration The following items are particularly important for this procurement

- User Contacts

  LSPS should have contact with actual users of the software and should discuss its day to day operation and use

- Performance Verifications

  The performance of the software may be reasonably measured by preparing test databases and having them run on the type of computer favored or on one that can be reasonably compared to the type which will be installed

- Detailed Functional Specifications

  Functional specifications should be written in a three step process First, at least three likely vendors should be identified and detailed information obtained about their products Second, a list of readily available functions should be compiled and compared to LSPS needs to form a list of required functions Third, a specification which identifies the functions required by LSPS should be generated

- Detailed Interface Specifications

  This list should contain the interface requirements that are satisfactory for the software These interface requirements should comprise a common ground for all the vendors and should be based on a reasonably portable software standards

- Developing Knowledge of Software

  Undertaking the integration will require that LSPS become more knowledgeable of the software before buying it The time required to gain this familiarity will be well spent as LSPS wishes to develop the ability to maintain the software Many of the packages are available in the stand alone mode Running the software as a standalone package should allow the user to become very familiar with the software and its capabilities before beginning the integration task

- Purchasing Integration Assistance

  LSPS should plan to purchase assistance from the various software vendors in two ways First, an initial training and start-up should be purchased at a fixed price Second, integration assistance should be purchased at a rate agreed to at the time of the software purchase A time and materials rate for this type of support is typical The understanding should be that the additional assistance will not be purchased unless required by LSPS

6.2 STAGED IMPLEMENTATION

The concept of staged implementation was selected as the most efficient and economical way to get a modern SCADA/EMS installed and operational The concept is based in a large measure on the new open system technology which, among other things, allows the use of software developed by different groups and different companies to be installed and used in a single system Following this concept, it is possible to license and use both he SCADA and power system applications software and to integrate this software with the existing system It is also possible to do many of the integration tasks in parallel making use of standardized specifications to cover the interfacing, data transfer and computational requirements This plan describes the tasks to be done and the schedule which will allow them to be accomplished

The key to the fast implementation scheme for the system is that it will for the most part be a direct replacement for the existing functionality with equipment capable of but not yet utilizing the final required functionality Figure 6 1, Project Schedule, shows the expected content and duration of the project In the beginning, the SCADA systems will be used only as a data collection terminal appearing to the existing system as just a replacement for the message concentrators (RPT-80s) The new functionality will remain unused during the first stages Later, when LSPS is comfortable with the robustness of the new equipment, it can take the place of the existing units it is intended to replace

6.2.1 SCADA

The SCADA system should be installed at DC Vilnius first and it should be determined that it works as a direct replacement of the RPT-80s Note that this can be done without disconnecting the RPT-80s or changing the existing configuration. The interface between the RPT-80s and the new SCADA system can be switched between the two units until LSPS is satisfied that the new SCADA system suitable to replace the RPT-80 system

6.2.2 ENE SCADA

Placement of the SCADA systems in the ENE centers can be done on a convenience basis and the procedure will allow for the parallel operation of the two devices with a switchable line interface The SCADA system will function as an RPT-80 in the first stages and will later serve as a connecting point for RTUs

FIGURE 6.1 PROJECT SCHEDULE

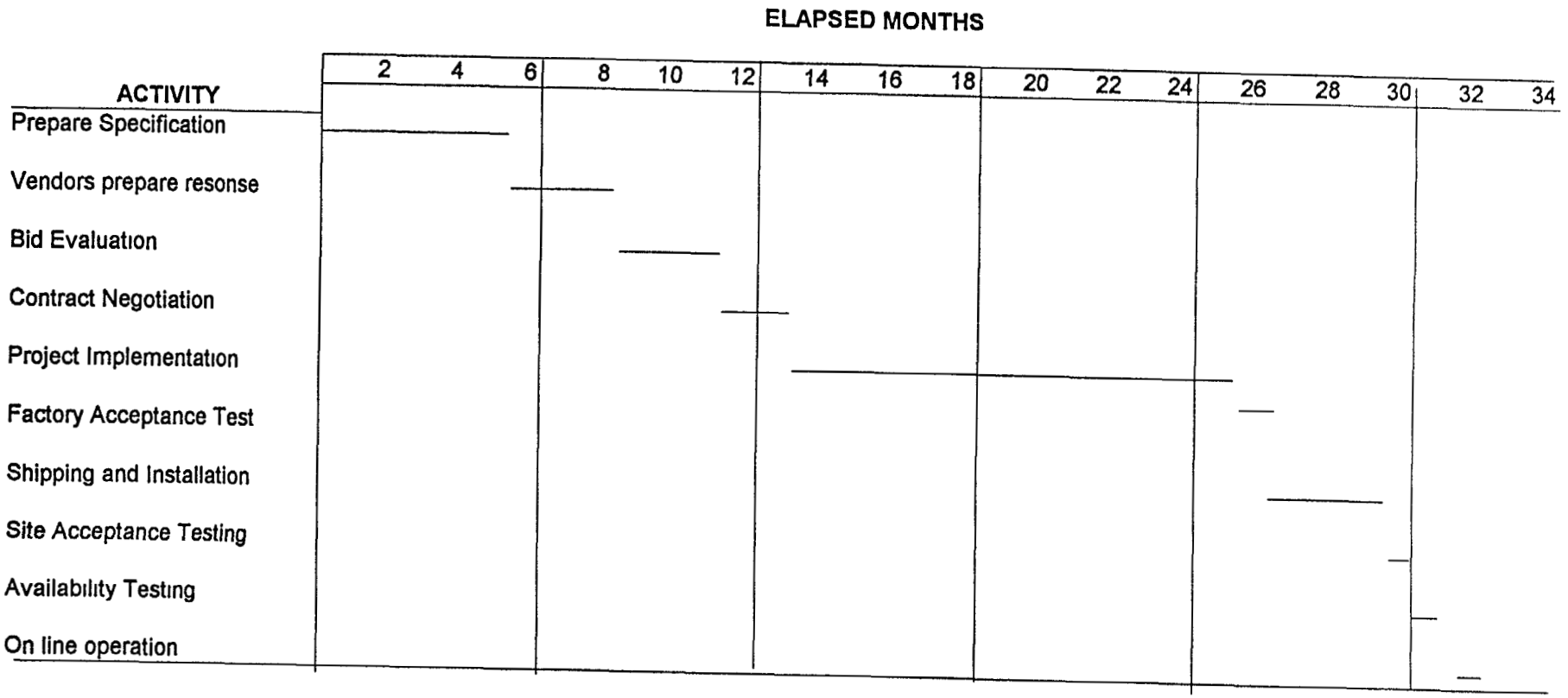

6.2.3 RTUs

The installation of RTUs is scheduled to be done on a three per week basis The new RTUs must be installed and the connections to each telemeasurement, telesignal and telecontrol point should be verified between the control centers involved and the RTU site It should be possible to connect the RTUs in parallel with the existing units in the location for the test and verification period

Connection of the RTUs to the system must be simulated as a prerequisite to purchasing SCADA software The simulation will include the actual connection of the type of RTU specified and the performance of the functions to be accomplished by that RTU before purchase of the software and hardware

6.2.4 Applications

Applications should be specified in detail, including the database interface requirements Only applications which are completed products and can be shown to run on the selected platform should be considered Depending on the database chosen for common use in the system, the capability of the applications software to adapt to this interface should be tested and verified in as much detail as possible before purchasing the software Failing this, a commitment by the software contractor to provide the interface as specified should be obtained

6.3 ORGANIZATION AND STAFFING REQUIREMENTS

LSPS should form a project team responsible for the top level design, implementation, integration, testing, and installation of the Energy Management System The members of this project team should be dedicated to the LSPS SCADA/EMS project Experience has shown that an independent and committed group capable of handling all aspects of the project is the most effective approach to meeting the design and operational goals of the system, on schedule and within budget

6.3.1 Project Organization and Management

LSPS should appoint a Project Manager with overall administrative and technical responsibility for the work to be performed LSPS In addition, the Project Manager should be responsible for the work performed by outside suppliers who will be providing equipment, programs, and services The LSPS Project Manager should provide a single point of accountability

LSPS should organize the project team as shown in Figure 6 2, Project Team Organization The groups should be dedicated to SCADA software, applications software, hardware configuration, RTUs and Communication The first group, dedicated to SCADA software, should be responsible for the specification and implementation of the SCADA software systems for DC Vilnius and each of the ENE centers The second group, dedicated to applications software, should have responsibility for the specification and implementation of power system applications software. The third group, dedicated to hardware configuration, should be concerned with the selection and purchase of computers and peripheral equipment The forth

group, in charge of RTUs and communication, should be responsible for the specification, selection and installation of RTUs and for the reconfiguration of the communications system to accommodate these RTUs There will be shared responsibilities between the groups, like the design and implementation of a shared database, that will require expertise and inputs from more than one group The project manager should assign and coordinate the work for such shared tasks between the groups

Members of the LSPS project team should work directly with the corresponding, designated contractor project managers, as was shown in Figure 6 1 The project manager or his assistant should review the progress of contractors' work on a continuous basis, approve factory and field tests, and arrange for contractor participation in progress meetings when required This will include working with the computer supplier to ensure their participation in the appropriate project tasks

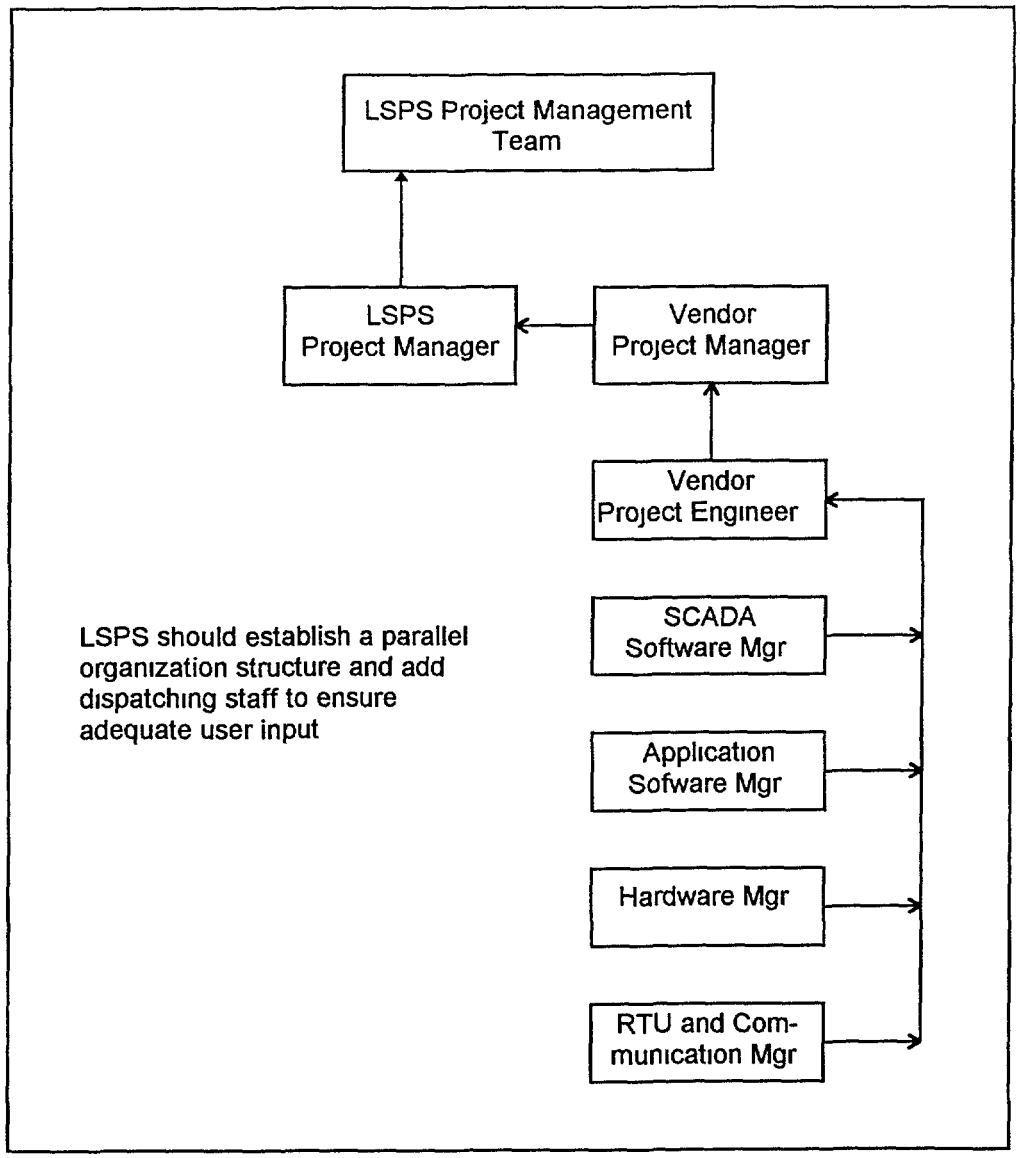

Figure 6 2 Project Organization

6.3.2 Permanent System Staff

One of the underlying principles of the open system is that upgrades and improvements may be implemented as required to keep the system both responsive to the needs of the power system and up to date in terms of the operating system and the application programs This will in the long run save millions of dollars in system replacement costs and keep the system operating at the highest practical level of performance To take advantage of this concept it is necessary to maintain a capable staff who are knowledgeable enough to maintain and upgrade the system

The permanent system staff should comprise of qualified software engineers with a power system background and experienced hardware personnel, trained to maintain the computer systems, communication equipment and RTUs supplied with the system The organization of the staff should conform with the overall organization of LSPS This will be a permanent arrangement as opposed to the temporary nature of the project team

The staff should receive training in informative instruction on an on-going basis to keep them abreast of the current advances in software and hardware technology

6.3.3 Staff Training Requirements

Training is key to the successful integration of the SCADA/EMS in Lithuania by LSPS personnel During the preparation the required training should be reviewed and specified in detail The training will differ from the type previously supplied by software and hardware vendors because it will have to be performed before the integration using the standard packages supplied by the vendors

The general categories of training that will be required are

- Orientation Courses
- Man-Machine System
- Database Use and Maintenance
- Display Compiler Use and Maintenance
- Software System Use and Maintenance
- Application Program Use and Maintenance
- Interface Training
- RTU and Communications Use and Maintenance

6.4 TIME PHASED IMPLEMENTATION OF THE ENE CENTERS

The time phased implementation of the ENE Centers will depend on the size and mobility of the team doing the installations. There should be no particular delays after the system is designed and the installation should be relatively the same at each center

Installation of one center per month and cutover as the users are comfortable with the new system The entire system should be operating within 13 months

6.5 FINANCING AND PROCUREMENT

The upgrade of the Dispatch Centers was included as a component of the larger power system rehabilitation project by the World Bank The details of the financing are contained in the World Bank Report No 12855-LT, dated May 1994, entitled " Staff Appraisal Report, Lithuania, Power Rehabilitation Project " Interested parties should refer to this report for additional details

7. SUMMARY, CONCLUSIONS AND RECOMMENDATIONS

Background

This report concludes a feasibility study, conducted by Electrotek Concepts, Inc and its subcontractor EPIC Engineering Inc , for the Lithuanian State Power System (LSPS) to upgrade the LSPS nationwide, hierarchical Energy Management System (EMS)/ SCADA system, also referred to as Dispatch Centers The study was funded by a grant from the United States Agency for International Development Agency (USAID) and performed during the period February 1993 to May 1994 The study was carried out in close collaboration with LSPS' technical and management staff LSPS' plans and internal study results were carefully reviewed and used as a starting point for the material presented in this study At the direction of USAID, the study team provided substantial support to the World Bank project staff, that was in the process of evaluating projects in Lithuania that were candidates for a loan from the World Bank The project team provided inputs to the World Bank team on technical and economic justifications for the Dispatch Center upgrade project

The primary motivation for upgrading the LSPS Dispatch Centers is the need for increased efficiency in the operation of the power system Actions are already underway to migrate the current system to a state-of-the-art EMS systems that will result in substantial fuel cost savings Secondary motivations for replacing the dispatching system are increased stability, reduction in maintenance costs and increased availability of expansion and replacement parts

The purpose of the study was to determine the operational needs of LSPS, evaluate alternatives for upgrading the system recommend solutions, and estimate the project's staffing and cost requirements The scope of the study included three main areas

- DC Vilnius - the National Dispatch Center at Vilnius Review the current situation of the EMS/SCADA functions and recommend a course of action that will produce the maximum cost savings during the next five years
- Electric Network Enterprise (ENE) SCADA systems Evaluate the ENE SCADA capabilities and recommend a course of action for upgrading them to provide the desired functions and to best support the upgrades to the DC Vilnius system
- Communication network Evaluate the current communication network with respect to maintainability and its ability to support the above upgrades and recommend a course of action which will best accomplish this

The study has resulted in an overall system design and implementation plan that requires coordinated changes in all three areas

The study began with a review of the existing power system structure, the current state of the on-going system improvement activity, LSPS operating procedures, existing control equipment, facilities and personnel The review covered the unique characteristics of the LSPS in the above areas and considered their current and planned interactions with the other power companies LSPS' changing operational needs and the effect of planned major changes in their power system were considered both to formulate a plan and to cost justify it. The fact that LSPS' only nuclear plant - Ignalina - according to the World Bank scenario, will have one unit shut

down for two to three years in the near future was an important factor in both the course of action and the recommended schedule

Conclusions

The changes currently being made in the control system are positive but not sufficient to meet all of the near term goals of LSPS The direction taken, using a LAN based system with networked PCs replacing the previous minicomputer based system, is a cost effective and sound approach At the current pace, however, it will not be possible for LSPS to design and install the needed software in time to realize the potential savings in fuel cost during the partial shutdown of Ignalina The total development time for the necessary software constrains LSPS from developing the software internally and dictates that existing software packages be purchased, modified, and integrated with the existing LAN based system

Substantial portions of the existing equipment need to be replaced to achieve the data acquisition rates commonly used in modern dispatch systems throughout the world and to support the advanced control and analysis applications needed for optimum system operation A modern SCADA processor, capable of interfacing to the Novell LAN, should be added to the LAN based system to provide for increased data throughput and use of modern Remote Terminal Units (RTU) equipment

The ENE Dispatch Centers should be upgraded to the same type of SCADA processors used in DC Vilnius The PC or workstation currently used to provide the SCADA functions should replace the existing communication concentrator and provide greater flexibility in the network connecting the remote sites to DC Vilnius The ENE system requirements are less demanding and SCADA software can run on a smaller complement of hardware It is key, however, that the software be a subset of the DC Vilnius SCADA software to reduce the initial learning curve and facilitate overall maintenance and future upgrading of the eight systems

The data communication needs for the upgraded control system will not appreciably increase in the beginning However, a longer term upgrade is necessary for the communication system The major concerns about the current system are its capacity and dependability The communication network uses analog equipment with installed components that are 10 to 30 years old The equipment is largely out of production and is increasingly difficult to maintain

It is recommended that plans be made for a phased upgrade of the communication system to provide a suitably robust and modern communication network capable of supporting a fully expanded, modern EMS This will include RTU channels of 1200 to 9600 bps and ENE to DC Vilnius links of 9600 to 19200 bps The communication system upgrade should be coordinated with LSPS' enterprisewide communication needs and upgrades

The functional requirements of the upgraded EMS/SCADA system at DC Vilnius are as follows.

1 Comprehensive SCADA functionality consisting of real-time processing of both the existing RTU/Concentrator data and of new RTU data Alarm processing, reporting, post-disturbance analysis, historical data base functions, interactive

display building, and failover and backup software, should be included The system should be based on Open System concepts

2 Generation Control functions capable of automatically allocating generation in real-time, together with a dispatch function to determine the lowest cost allocation of total demand to individual generating units
3 Energy Scheduling and Accounting functions to allow the operator to enter into energy sales and purchases agreements that reduce LSPS cost or increase revenue
4 Network Analysis Program for security assessment and optimization

The ENE system functional requirements include SCADA and communication system support for communicating with the DC Vilnius The requirements comprise of

1 Comprehensive SCADA functionality (as described for DC Vilnius above)
2 Capability to duplicate the functionality and protocol of the existing RTU/Data Concentrator
3 Sub-master capability to allow the system to function both as a local SCADA system and to as a store and forward concentrator for DC Vilnius

RTUs must also be replaced as soon as possible but can be phased in as budgetary and other constraints permit

Cost/Benefit Justification

After evaluating several technically feasible solutions, the most cost effective solution was selected The key feature of the selected approach is a migration philosophy that allows new components to work in parallel with the existing system until their functionality and robustness are verified The philosophy reduces the overall cost of the system enhancement by reducing the on-site involvement of the system vendors It takes full advantage of the proven capabilities of LSPS personnel

The total system upgrade is cost justifiable on the basis of quantifiable benefits (due mainly to reduced operating costs) The total cost of the upgrades will be recovered in three years of operation that includes reduced nuclear production Other benefits such as increased security, reduced maintenance effort, higher availability, and future expansion capability further serve to justify the project. Specific details can be found in the World Bank's Staff Appraisal Report, Report No 12855-LT, May 4, 1994.

Standard off-the-shelf systems are available from several vendors worldwide and LSPS staff can start with these and customize them to meet specific needs. This will reduce the amount of external financing needed

Recommendations

The study team considered the LSPS national and enterprise centers as a single multi-tiered entity that serves the electrical demands of Lithuania. Similarly, the existing data acquisition system and the installed communication lines are designed to store the RTU data at the ENEs and transmit it over a faster link to DC Vilnius This general structure is consistent with the LSPS operating philosophy and should be retained It also requires the least change in the day-to-day activities of the operating staff The recommended upgrades are divided into two phases as follows:

- **Phase 1**

The study team recommends the upgrade of the DC Vilnius Data Acquisition System by migrating the existing system to a full SCADA system with the addition of hardware and off-the-shelf SCADA software It is further recommended that the overall dispatch system network structure be kept in place and that the data from the remote sites be collected by the ENE SCADA and forwarded to DC Vilnius

The hardware chosen should provide a straightforward interface to the existing Novell server The computers hardware should use the UNIX operating systems (or the PC operating systems, if PCs are used)

In many cases, new RTUs will be needed and are considered a hardware upgrade and can be connected to DC Vilnius or to the ENE DCs or both A total of 25 RTUs are needed immediately at the 330 kV stations, interconnection points, generating plants and key 110 kV lines Ultimately, all RTUs all of which are old, obsolete and difficult to maintain, will have to be replaced as soon as possible

Irrespective of the specific hardware platform, it should be selected only if a full complement of the required software is available for it This software must provide the standard SCADA functionality as described in Section 3 of the report The SCADA software should support the total recommended functionality and should provide for dual, redundant SCADA server stations, redundant communications workstations, and redundant man-machine workstations It should be able to run on a minimum single CPU system and be expandable to LSPS' maximum predicted requirements

It is also recommended that the ENE systems be changed to include the SCADA hardware and software identical to that used at DC Vilnius

The procurement of the advanced control and analysis software is divided into two phases In this phase, Phase 1, which is to be implemented with the initial SCADA system, generation scheduling and control programs, and network analysis and optimization programs will be installed These programs include Automatic Generation Control, Economic Dispatch, Transaction Evaluation and Scheduling, Energy Accounting, State Estimation and Optimal Power Flow

- **Phase 2**

Phase 2 will include only the remaining application programs which consists of

Contingency Analysis
Hydro Thermal Optimization
Unit Commitment
Dispatcher Training Simulator

It is recommended that that LSPS implement Phase 1 immediately according to the following sequence of activities

1 Select consultant and prepare specifications for the Phase 1 functionality with detailed requirements for hardware and software

2 Prepare supporting information to be distributed with the Request for Proposal (RFP) to help prospective bidders understand the special requirements These include

- Interfaces to RPT-80 communication processors
- Location and sizes of new RTUs
- Data to be collected and transmitted
- Overall system topology
- Required displays
- Lithuanian language support

3 Issue the specifications - RFP, and sample interfaces
4 Evaluate proposals and select supplier
5 Train LSPS personnel
6 Proceed with the implementation plan

System commissioning should begin immediately with the installation and interfacing of the SCADA software An independent outside consultant should be retained to assist LSPS in the vendor selection and implementation tasks