PN-ACC-220

Operating and Managing Communal Solid Waste Landfills in Hungary

Local Environmental Management Project
(LEM)
Hungary

September 1994

A

Improved Public Sector Environmental Services Project

Prepared for:

Environment and Natural Resources Division
Bureau for Europe
Agency for International Development
Washington, DC

Contractor:

Research Triangle Institute
P.O. Box 12194
Research Triangle Park, NC 27709

Prepared by:

LEM Project
Hungary

Contract No. EUR-0039-C-00-2065-00

B

Operating and Managing Communal Solid Waste Landfills in Hungary

LOCAL ENVIRONMENTAL MANAGEMENT (LEM) PROJECT

Prepared by:
Research Triangle Institute (RTI)
P.O. Box 12194
Research Triangle Park, NC 27709

Funded by:
U.S. Agency for International Development
Washington, DC 20523
Contract No. EUR-0039-C-00-2065-00

September 1994

TABLE OF CONTENTS

Figures and Tables v

1 INTRODUCTION 1
- 1.1 Local Environmental Management Project Overview 1
- 1.2 Objectives of This Manual 1
- 1.3 Who Should Read This Manual? 2
- 1.4 Acknowledgments 2
- 1.5 Chapter Checklist 2

2 LANDFILL OPERATIONS 5
- 2.1 Terminology 5
- 2.2 Establishing Operating Procedures 7
- 2.3 Hours of Operation 8
- 2.4 Controlling Access to the Landfill Site 8
- 2.5 Directing Incoming Traffic 9
- 2.6 Measuring Incoming Waste 10
- 2.7 Unloading Incoming Wastes 11
  - 2.7.1 Communal Solid Waste 11
  - 2.7.2 Industrial Process Wastes 11
  - 2.7.3 Dead Animals 13
  - 2.7.4 Heating Residue 13
  - 2.7.5 Tires 13
  - 2.7.6 Brush 14
  - 2.7.7 Demolition Waste 14
  - 2.7.8 Wastes with High Moisture Content 14
- 2.8 Constructing Landfill Cells 16
  - 2.8.1 Volume Requirements 16
  - 2.8.2 Landfill Layout 16
  - 2.8.3 Sequential Filling Plan 18
  - 2.8.4 Cell Layout 22
- 2.9 Placing Cover Material 22
  - 2.9.1 Daily 22
  - 2.9.2 Intermediate 23
  - 2.9.3 Final 23
  - 2.9.4 Cover Soil 23
- 2.10 Scavenging and Recycling 25
- 2.11 Chapter Checklist 25

3 ENVIRONMENTAL MANAGEMENT STRATEGIES 27
- 3.1 Minimizing Surface Water 27
- 3.2 Groundwater Protection 27
  - 3.2.1 Leachate Generation 27
  - 3.2.2 Leachate Management 29
  - 3.2.3 Leachate Treatment 29
  - 3.2.4 Groundwater Monitoring Wells 30

TABLE OF CONTENTS (continued)

3.3 Controlling Landfill Gas 33
3.3.1 Generation 33
3.3.2 Movement 33
3.3.3 Venting and Utilization 34
3.3.4 Monitoring 34
3.4 Dust, Mud, and Litter Control 38
3.4.1 Dust 38
3.4.2 Mud 38
3.4.3 Litter 39
3.5 Reducing Noise and Odors 39
3.6 Vector Control 40
3.7 Preventing Fires 40
3.8 Chapter Checklist 41

4 EQUIPMENT 43
4.1 General 43
4.2 Equipment Functions 43
4.2.1 Waste Handling 43
4.2.2 Waste Compaction 43
4.2.3 Cover Material Handling 45
4.2.4 Support Functions 45
4.3 Required Equipment 45
4.4 Equipment Maintenance and Safety 46
4.5 Chapter Checklist 46

5 PERSONNEL 47
5.1 Job Descriptions 47
5.2 Fitness for Job, Personnel Restrictions 48
5.3 Job Training 48
5.4 Chapter Checklist 49

6 ADMINISTRATION 51
6.1 Cost Documentation and Control 51
6.2 Performance Evaluation 52
6.3 Personnel 52
6.4 Community Relations 52
6.5 Chapter Checklist 53

APPENDICES

A Hungarian Rules and Regulations Applicable to the Development and Operation of Communal Waste Landfills
B Sample Landfill Operating Rules

FIGURES AND TABLES

Figure 1. Daily Landfilling Operations 12
Figure 2. Paint Filter Test for High-Moisture Wastes 15
Figure 3. Landfill Layouts for Various Topographic Settings 17
Figure 4. Sequential Filling Plans 19
Figure 5. Landfill Final Cover 24
Figure 6. Landfill Environmental Concerns 28
Figure 7. Leachate Treatment Processes 31
Figure 8. Landfill Monitoring Activities 32
Figure 9. Methane Vents and Barriers 35
Figure 10. Methane Flares and Recovery Systems 36
Figure 11 Methane Monitoring Probe 37
Figure 12. Landfill Waste Densities 44

Table 1. Safety Suggestions for Sanitary Landfill Equipment Operators 46

1 INTRODUCTION

1.1 Local Environmental Management Project Overview

The Local Environmental Management (LEM) Project is being conducted by the Center for International Development of the Research Triangle Institute (RTI), a not-for-profit organization based in the Raleigh/Durham area of North Carolina, with the financial support of the Environmental and Natural Resources Division of the Bureau for Europe of the United States Agency for International Development (USAID). The three-year project commenced in July 1992.

During the fall of 1992, it was decided to focus the efforts of the program in Poland and Hungary, with the following three objectives: (1) to demonstrate the extent to which local governments can effectively manage their environmental problems if given adequate and consistent support; (2) to assist project municipalities in producing reliable and technically acceptable proposals for the funding of environmental projects for presentation to national and international funding agencies; and (3) to make available for use to other municipalities the replicable details as a result of the former two activities. A subpurpose of the project is to act, through the project manager, as broker-liaison by matching municipal requests for technical assistance not supplied by LEM with various USAID-supported projects that may be able to provide the needed information, data, or assistance.

Over the course of 1993, a series of detailed assessments was conducted of wastewater projects in five municipalities in Poland and solid/hazardous waste projects in four municipalities in Hungary. The assessments examined the technical, managerial, and financial aspects of the projects and outlined technical assistance and training needs. The LEM project immediately began to provide specific technical assistance, develop manuals, and prepare training sessions in support of these projects. This is one of a series of manuals the LEM project has developed to build capacity at the local level to conduct environmental improvement projects.

1.2 Objectives of This Manual

This manual has been prepared to assist Hungarian local government officials and other personnel on how to operate and manage their landfills. It is designed to explain how to operate and manage a landfill so that disposal practices will have as little impact as possible on human health and the environment. It explains who is responsible for the technical and management functions required. This document is intended to serve as a general guide, rather than a specific plan, so it can be

applied to all existing landfills in Hungary. Some suggestions in the manual may be modified slightly to reflect specific site conditions.

This manual focuses on operation and management and is not intended to serve as a landfill siting or design manual. Important landfill issues not addressed in this manual include engineering design specifications, environmental monitoring requirements, closure plans, and financial management guidelines.

1.3 Who Should Read This Manual?

This manual should be read by all Hungarian local government officials and landfill staff who have responsibility for operating and managing landfills. It should also be of value to elected members of local government assemblies who need information to justify the increased expenditures that may be required to improve landfill operations in many Hungarian cities.

1.4 Acknowledgments

This manual was primarily drafted by RTI consultants Mr. George Murray and Dr. Philip O'Leary. RTI would like to acknowledge the assistance of Dr. Gabor Peteri and Dr. Andras Kovacs, Hungarian specialists in local government who served as technical advisors and interpreters during this project. Mr. Kennedy Shaw, LEM Project Coordinator in Hungary, provided guidance during the field research and preparation of this manual.

Finally, the preparation of this manual would not have been possible without the assistance of a landfill advisory board comprised of Hungarian landfill specialists from universities and local and national government. The committee members reviewed early drafts of this manual, and their comments were presented to the LEM manual authors during several advisory committee meetings. Members of the advisory board were: József Böhm, Miskolc University; József Juhász, Városgazda Rt; György Kertész, Ministry of Interior; Ferenc Köllner, Association of Local Governments; Ernö Kiss, Ministry of Environmental Protection and Regional Development; Csaba Németh, KEVITERV Kft; Dénes Olessák, Ministry of Industry and Trade; Ernö Pál, Borsod-Abaúj-Zemplén County Local Government; Mihály Siklóssy, Public Area Maintenance Company of the Capital City; and Attila Nagy, Mayor, Edeleny.

1.5 Chapter Checklist

At the end of each chapter is a checklist that briefly summarizes activities discussed in the chapter. For Chapter 1, the checklist is as follows:

1. Prepare a list of the individuals in the community who would benefit from having a copy of this manual.

2. Loan or send copies to the listed individuals.

2 LANDFILL OPERATIONS

This chapter describes recommended operating guidelines for receiving and processing waste at landfills.

2.1 Terminology

The following waste definitions are used in this chapter and throughout the manual:

Waste types:

Agricultural waste: animal and plant waste, as well as production waste, originating from agricultural and food industry and services. The majority can be disposed according to biological waste handling procedures. Only a small portion of agricultural waste is considered to be hazardous.

Communal waste: waste materials generated by single and multiple-family residences, and office wastes generated in commercial and industrial facilities.

Commercial waste: waste materials originating in wholesale, retail, institutional, or service establishments such as office buildings, stores, markets, theaters, hotels, and warehouses.

Domestic waste: waste generated as a result of day-to-day living in homes and vacation or recreational areas, as well as in common areas of apartment buildings.

Garden waste: waste from the yards and gardens of houses and vacation or recreational institutions. It consists of withered plants, flowers, pruning remnants, fallen leaves, etc.

Hazardous waste: waste that, because of chemical reactivity, toxic, explosive, corrosive, or other characteristics, could cause danger to human health or the environment, whether alone or in combination with other wastes; these wastes are not permitted in communal solid waste landfills.

Previous Page Blank

Industrial waste: manufacturing process waste and scrapped equipment or materials from industrial shutdown. The physical and chemical characteristics of industrial waste vary widely, as do their qualitative differences. The most dangerous types are the so-called hazardous wastes, which are poisonous, contaminating, flammable, and combustible. Industrial wastes can differ greatly even within a given factory, depending on the technologies used.

Institutional waste: waste originating as a result of activities of state or social organizations. It includes various organic, nonorganic, liquid, and solid materials.

Medical waste: Infectious wastes generated by hospitals, clinics, nursing homes, doctors' offices, medical laboratories, research facilities, and veterinarians.

Public property waste: waste and litter collected daily or at regular intervals from public roads, sidewalks, stairs, bicycle paths, squares, walks, public gardens, parks, bridges, underpasses, etc.

Special wastes: wastes that require special or separate handling, including tires, brush, demolition debris, motor oil, and bulky metal items.

Transportation waste: manufacturing process waste and scrapped equipment or materials from railway, road, air, and water transportation. Typical are large pieces of waste (such as scrap vehicles) and waste requiring special handling (such as used motor oil, discharged batteries).

Landfill terms:

Artificial hill building: a variation on the prism type of unloading system, applied mainly in level areas where a change in the terrain is desired during landscaping, and where conditions are unsuitable for depositing waste under the surface.

Cell: a volume of compacted waste surrounded by cover soil.

Cover:

Daily cover: a covering layer applied over waste material daily to isolate the waste from the environment, and to reduce problems from birds, rodents, fire, etc.

Intermediate cover: an application and compaction of cover having the same functions as daily cover but 30 centimeters thick; intended to be exposed for one month to one year.

Final cover: an application and compaction of fine-grained soil on the landfill after it has reached its designed elevation; the final cover soil should be relatively impermeable and have a minimum thickness of 60 centimeters with 15 centimeters of topsoil for vegetative growth.

Leachate: the liquid pollutant resulting from the landfilling and decomposition of organic waste matter.

Leachate dam: a liquid impoundment of leachate and polluted surface water runoff.

Leachate drains: pipes or ditches inside the landfill that are designed to drain leachate and polluted surface runoff to the leachate dam.

Lift: a series of one or more landfill cells forming a section of landfilled waste that extends horizontally across the landfill.

Perimeter drains: a system of open ditches completely surrounding both the fill area and the buffer zone that divides the landfill from adjacent property. The ditches prevent water from draining directly into or out of the landfill.

Rainwater infiltration (see Runoff)

Recycling: a firm's authorized, organized separation of reusable materials from refuse either at the source of generation or from the landfill.

Runoff (rainwater infiltration): water mainly from precipitation, which comes into contact with landfill waste and infiltrates it, thereby becoming strongly polluted with water-soluble organic and nonorganic materials. It must be collected and dealt with properly within the landfill.

Scavenging: the unauthorized, unorganized searching of waste for reusable goods including food and other items.

Vectors: birds, insects, and rodents capable of carrying disease-causing bacteria, viruses, or fungi from one host to another.

2.2 Establishing Operating Procedures

The siting, permitting, and design of new landfills is regulated by the 1986 Ministry Decree. This Decree describes the steps necessary for locating a new site and the studies and approvals that are needed before a "Use Permit" is issued.

Currently there are few Hungarian regulations or laws concerning the operation of landfills; regulations that do exist deal primarily with landfill construction rather than with operations and maintenance (see Appendix A). Thus, it is the responsibility of the owner of the landfill to develop and institute operating regulations that will protect the health of the public and the surrounding environment. An effective operating plan both specifies routine procedures and anticipates abnormal situations. It must define daily activity sufficiently, yet be flexible.

Landfill operators should prepare a list of landfill rules to control the landfilling of waste and other activities at the landfill. The landfill rules should be printed on a single sheet of paper with a map of the landfill printed on the back. Copies of the rules should be available from the check-in personnel. The operator should distribute copies of the rules to everyone using the landfill. The landfill rules may be revised from time to time. A sample list of rules is included in Appendix B.

The best-designed landfill will be of little value if it is not constructed and operated in an orderly, controlled manner. Unlike a typical civil works project, a landfill is continually under construction until it accepts its last load of waste and closes; therefore, construction and operation are actually one function.

2.3 Hours of Operation

Hours of operation depend on the amount of waste delivered to the landfill for disposal, as well as the processing methods in place. Traditionally, landfills were open seven days per week, generally during the daylight hours, and supervision and security at the landfill were minimal. Modern landfills need a greater degree of management and control, and therefore a larger staff, than were required in the past. For example, all waste should be weighed or recorded as it enters the landfill, the type and origin of waste determined, and waste haulers directed to specific areas for waste disposal.

Normal business hours at the landfill should be set according to the time of day waste is collected in the area served by the landfill. Special hours need to be arranged for Sundays and holidays. Daily operations will require the placement of daily cover soil at the end of each day's activity. In order to permit daily cover to be applied, the operator may want to restrict actual dumping of waste to allow one hour for compacting and covering the day's waste, or extend operating hours by one hour after closing.

2.4 Controlling Access to the Landfill Site

Hungarian regulations stipulate that a landfill must have an adequate fence installed around the entire site to prevent access to the site when the landfill is closed. Guards are also required to make sure no one uses the site after hours and to notify proper authorities of any problems that arise after the facility closes, such as vandalism, fires, and unauthorized use.

A sign should be installed at the entrance to the site that informs users of the following:

- Name of the facility and the permit number;
- Name, address, and telephone number of the permittee;
- Days and hours the facility is open to accept waste;
- Types of waste accepted; and
- Penalty for unlawful dumping.

2.5 Directing Incoming Traffic

The operator needs to maintain an orderly flow of traffic into and out of the landfill site. Traffic should not be permitted to bypass the weighbridge or check-in point. Pylons, barricades, tires, and signs can be used to direct refuse vehicles to the active face of the landfill. Haphazard dumping should not be permitted.

Unrestricted access to the landfill can cause traffic problems and congestion at the landfill face, especially when conditions are muddy. The operator may want to restrict access to the landfill by cars and provide skips in the receiving area for small vehicles to use when the landfill is unusually muddy.

The operator should place signs at appropriate locations directing traffic to the special waste areas. These signs should be in large block letters. Copies of the site map should be available to be handed out to vehicle drivers, directing them to the appropriate disposal area.

Due to the wide variety of vehicles using a landfill, the active face of the landfill should have two separate areas—one for vehicles capable of mechanically discharging their wastes, and a second area for vehicles that must be manually unloaded.

A gate attendant is needed during the operating hours of the site. The attendant should be adequately trained in his/her duties and in the regulations of the facility. If possible, the gate attendant and the machine operator at the working face of the disposal area should be provided with radios so that they can keep in contact with each other. This communication link will allow the gate attendant to notify the operator that users are coming to the disposal area, so the operator can monitor where the user dumps the waste. Radios are also very useful for emergency communications if a fire develops or someone is injured.

General duties of the attendant include:

- checking the identification of users to determine whether they are allowed to use the site. This should be accompanied by a permit procedure developed by the owners that includes stickers installed on the left front of the vehicle indicating that the user has registered and is allowed to use the site;

- recording information about the user that includes date, time, name or permit number, type of vehicle, volume or weight of waste, type of waste, and geographic area from which the waste originated;

- providing directions to the users of the site as to the proper location for disposing of the type of waste carried by the user. This will allow the owner to begin separating different types of waste to compost, recycle, or use for daily cover if the load is all waste soils; and

- providing a contact person for users of the site, to answer questions regarding regulations of the site and waste disposal.

Once the users have checked in and left the gate-attendant area, they should follow directional signs along the access road to the specific waste disposal area for the type of waste they are disposing.

2.6 Measuring Incoming Waste

The efficiency of the landfill operations and projections of life expectancy can be determined by the amount of waste being placed in the landfill. Therefore, all waste materials entering the landfill should be identified by type and weighed or their volume estimated. Exceptions include tires, which can be counted and recorded; and small amounts of waste brought in private vehicles, which can be estimated. This information is used to develop a final design for the facility and to establish a basis for implementing financial management procedures.

There are two ways to determine the amount of waste received at a landfill. The first is to actually install a weighbridge and weigh each vehicle when full (gross weight) and when empty (tare weight). The difference in the two weights, or net weight, is the amount of disposed material. This method requires that from the time the landfill opens each day until it closes, all vehicles must be weighed going in and coming out of the landfill.

The operator should log all waste entering the landfill, including the weights, registration number of the vehicle, the type of waste, and origin of the waste using an established classification numbering system. In addition to filling in the log, the operator should maintain a separate list of tare weights of each vehicle by registration number. This list should be posted near the scale so that the attendant can enter tare weights into the log without having to weigh the empty truck every trip. The information is compiled on a daily, weekly, and annual basis and used for the final design of the site.

An alternative to the installation of a weighbridge is to use portable scales to perform the weighing during two-week periods, ideally at different times of the year, to develop an estimate of the waste received annually. The portable scales serve the same function as a weighbridge but require at least one additional employee to assist in weighing the vehicles.

For this second method, attendants still must maintain a daily log of all vehicles using the site. The log should record information concerning the vehicle and size of the load to be deposited at the site, for example. This information should then be compiled and used to calculate the cubic meters of waste received. A weighing program and a daily log can provide more accurate information than either method used alone.

2.7 Unloading Incoming Wastes

After identifying and weighing wastes, landfill staff will be responsible for carrying out the appropriate unloading procedures based on the type of waste.

2.7.1 Communal Solid Waste

Communal solid waste, including nonhazardous commercial and industrial office waste, will be the largest component of the waste stream entering the landfill. This waste should be unloaded at the base of the landfill face. Approved separation of recyclable materials should begin as soon as the waste is unloaded. If the waste is primarily waste paper or cardboard from commercial offices, it may be unloaded in a separate area near the active face to allow more time for separation of recyclables. The operator should coordinate with approved recycling contractors to maximize the separation of recyclable materials.

After recylables have been removed, the waste should be spread and compacted in 0.5-meter layers. Two to five passes with the landfill compaction equipment should provide adequate compaction. Figure 1 shows the unloading, spreading, and compacting of waste.

Communal solid waste may occasionally contain bulky items such as discarded furniture or appliances. This type of waste should be recycled if at all possible. If it cannot be recycled, it should be crushed with a steel-wheeled compactor and compacted with other refuse.

2.7.2 Industrial Process Wastes

The landfill may receive requests to accept industrial wastes. These wastes should be evaluated individually by the operator to determine the most efficient and environmentally safe disposal method. No approval should ever be given for disposal of sludges, liquids, or solids that are hazardous or toxic. The landfill manager should require the industry representative to supply results of waste analysis, and proper documentation that the wastes are not hazardous or toxic, before giving approval to dispose of the material in a communal solid waste landfill.

Step 1 – Unload Solid Waste

Step 2 – Remove Recyclables

Step 3 – Spread into Thin Layers

Step 4 – Compact Waste

Step 5 – Cover Waste

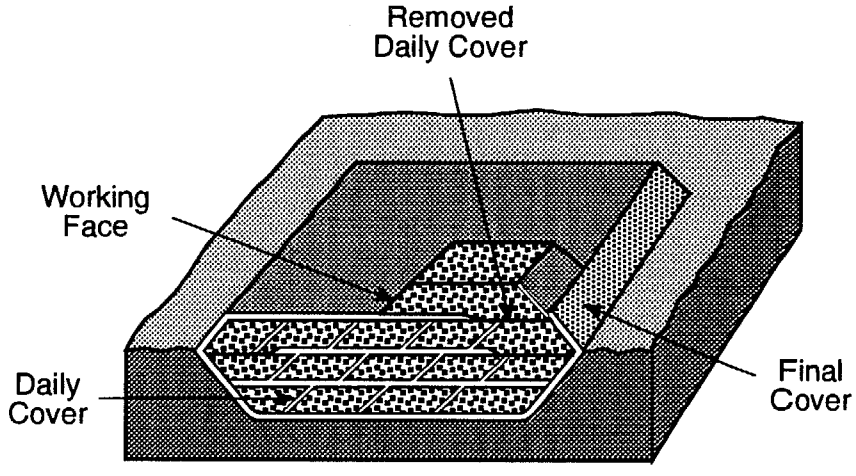

Landfill Lifts and Cover Layers

Figure 1. Daily Landfilling Operations

The landfill could currently be receiving industrial or hazardous waste that could be found unacceptable for landfill disposal. The continued receipt of these waste types may result in groundwater and soil pollution that will be very expensive to clean up later. The waste generator should be notified that the waste will no longer be accepted. An agreed-upon schedule should be established to allow the waste generator time to find a suitable disposal method.

If the equipment operator or the gate attendant determines that there is prohibited industrial waste in a load arriving at the landfill, he/she should record the vehicle license number, name of the industry, and name of the driver delivering the waste, and report this finding to the proper environmental authorities. The truck should be directed to leave the site. The environmental authorities should then follow up on this information to determine if the waste was disposed of properly elsewhere.

If toxic or hazardous waste is found in a waste pile after the delivery truck has left the site, the waste should be segregated from the other wastes if handling it will not expose the operator to any danger. The landfill manager should arrange to have the waste removed by a trained hazardous and toxic waste employee, and the company or person responsible for disposing of the waste should be contacted and charged for all costs incurred in removal and disposal of the waste. The waste should be stored out of the way of any areas used by the haulers at the site and should not be left out in the open where rain, animals, or humans could come into contact with it.

2.7.3 Dead Animals

Dead animals cannot be disposed of in a communal solid waste landfill, according to Hungarian regulations. If dead animals are found in the waste, they should be removed and disposed of at the proper facility. The landfill manager should contact the local Health Directorate for the location of proper disposal facilities.

2.7.4 Heating Residue

Large quantities of wood or coal ashes, from incinerators or boilers that contain hot cinders or coals, should be placed in a separate hot-load area of the landfill where they can be observed to ensure that they are not a fire hazard. After the operator is confident that the material has cooled and is no longer a potential fire source, the ashes should be incorporated into the landfill.

2.7.5 Tires

A separate area should be established for tire storage if markets can be identified for recycling. The operator should direct users to place all tires in this area. If there are no markets for the tires, they should be placed at the bottom of the daily cell and covered with refuse. Placing them at the bottom of a cell will prevent the tires from working their way up through the cover soils.

2.7.6 Brush

A separate area should be designated for the disposal of brush and other clean wood waste. No other waste should be permitted in this area. Several alternatives exist for handling this material.

Brush should either be chipped with a mechanical chipper or crushed and compacted with a steel-wheeled compactor or a tractor bulldozer, and then periodically covered with soil. If a chipper is used, the wood chips could be used as landscape mulch or fuel.

Brush can also be set aside and composted with other yard and garden wastes that are separated from the incoming waste. The compost can be used as topsoil at the landfill for recultivation of areas that have reached final elevations. The compost could also be used for municipal operations where topsoil is needed, such as along roadways after construction, in park garden areas, and in planters used as decoration around the city.

2.7.7 Demolition Waste

Special areas should be designated to receive demolition waste, which is primarily masonry and inert earth materials resulting from building demolition or new construction. Waste should be placed in cells as refuse, but without daily cover soil. The area should be periodically graded and covered to allow several vertical lifts to be constructed.

As an alternative, the demolition waste could be used for building berms around the landfill in preparation for the next lift of refuse. The material could also be used as daily cover if it consists primarily of soils.

2.7.8 Wastes with High Moisture Content

At the typical landfill in this region, adding liquids to the landfill will eventually cause increased leachate generation. Higher leachate quantities increase operating costs for leachate collection and treatment. They also increase the chance that leachate may flow through the landfill's base and degrade groundwater quality. Consequently, with the exception of specially designed landfills constructed to contain and process high-moisture wastes, landfills should be operated to minimize the entry of liquid wastes.

To limit operating cost and to maintain groundwater quality, as a general practice, the routine disposal of liquid wastes in landfills should not be allowed. One simple approach for evaluating incoming waste that contains a significant amount of moisture is to apply the "paint filter test." Waste samples are placed in a glass laboratory funnel on top of a paper filter (see Figure 2). If any liquid drains through the filter by force of gravity, the waste is considered to contain more moisture than is acceptable for landfilling. This test is appropriate for determining the acceptability of water and wastewater treatment plant sludges and residues for landfill disposal.

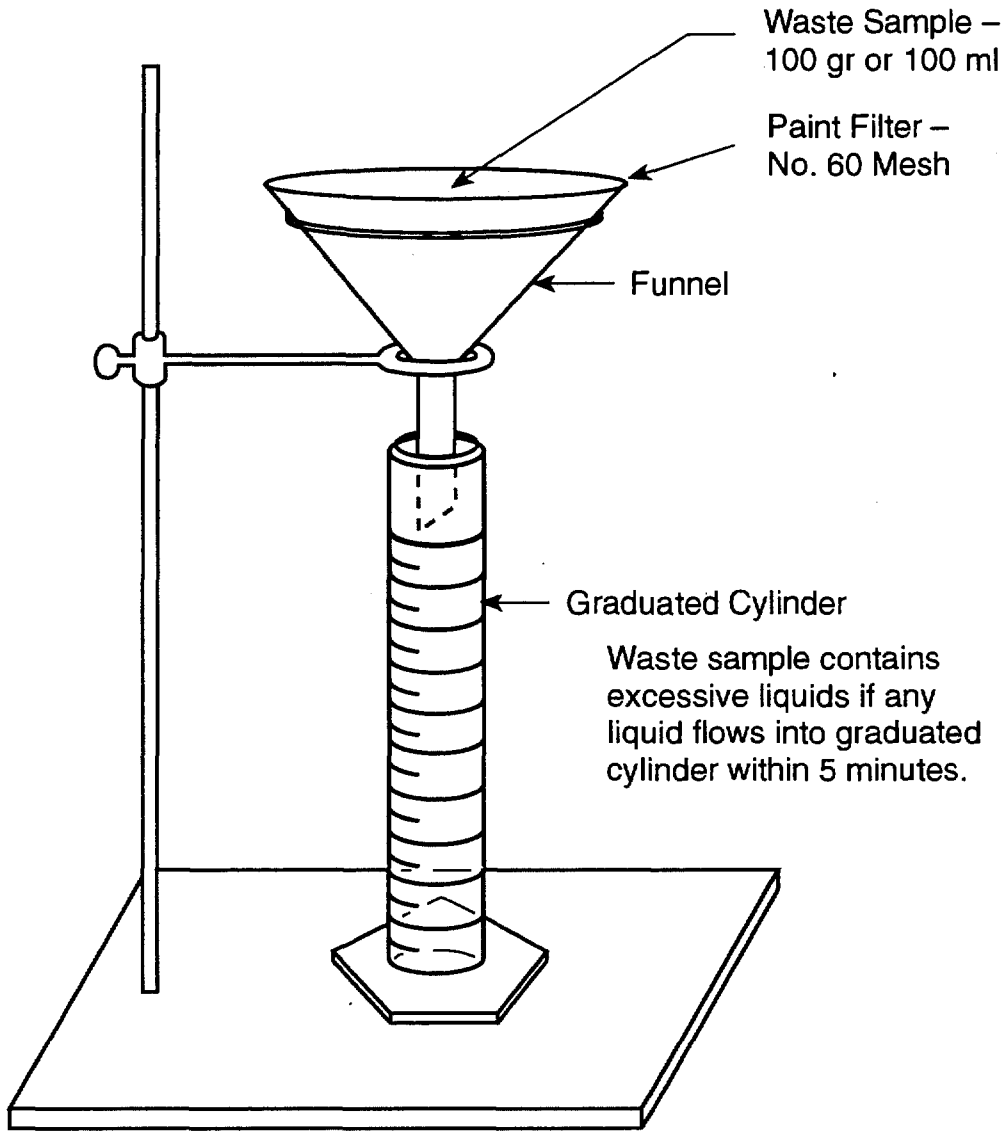

Figure 2. Paint Filter Test for High-Moisture Wastes

Septage and the contents of septic and holding tanks will usually fail the paint filter test and are unacceptable for disposal in a landfill. Alternate disposal procedures for septage and the contents of septic and holding tanks should be developed as one step in improving landfill operating practices.

2.8 Constructing Landfill Cells

2.8.1 Volume Requirements

Before the cell layout of the landfill is planned, it is necessary to determine the amount of volume (in cubic meters) that will be required to accommodate the anticipated amount of incoming waste. The volume calculation assumes a density of 250 kg/m^3 for as-received refuse and 750 kg/m^3 after placement and compaction in the landfill. A lower in-place density will reduce the life of the landfill, whereas a higher density will extend the life of the landfill. As illegal burning is discontinued at landfills, it will be increasingly important to practice effective compaction so that final waste volumes are minimized. Cover material can be assumed to occupy approximately 20% of the total landfill volume; compacted refuse occupies 80%. Settlement will occur as the waste decomposes. Normally up to a 15% reduction in the height of the landfill results from settlement.

2.8.2 Landfill Layout

Once the volume is determined, a topographic map showing existing conditions needs to be prepared. This map will be used to develop the final elevations of the site when it reaches capacity and to set grades for placing the waste received.

The design needs to depict the site as it should look when it is filled to the maximum volume available. To achieve this volume, however, the sides should have a slope no greater than one vertical to three horizontal meters (1:3). Using this slope will allow easy access for the compaction equipment, will provide optimum compaction of waste, and will assist in providing a stable foundation for future closure of the site.

The site's topographic and hydrogeologic conditions determine the overall landfill configuration. On flat terrain, the configuration most frequently implemented is the area method of landfilling. The soil is excavated to the desired depth and stockpiled for future use. Liners and leachate collection facilities are installed as specified in the design plans. The waste is placed in cells and layers according to the sequential filling plan (described in the next section). At sites where the type of soil and depth of groundwater are determined by a hydrogeologist to be suitable, the site can be excavated to a depth of as much as 10 meters. Several examples of different excavation are shown in Figure 3.

Landfill construction on formations with shallow water tables or bedrock must be limited in depth. This can result in a landfill that is constructed almost entirely above ground. A special above-ground sequential filling plan will need to be executed and cover soil will need to be imported from another location.

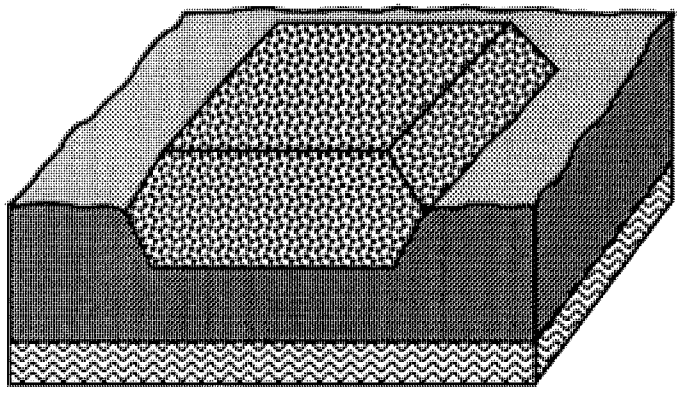

Deep Watertable

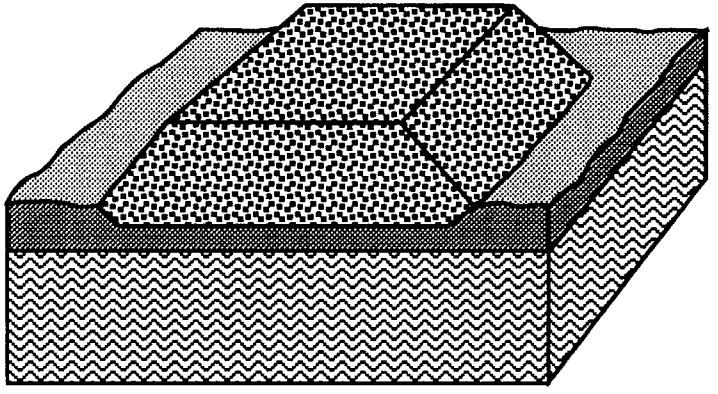

Shallow Watertable

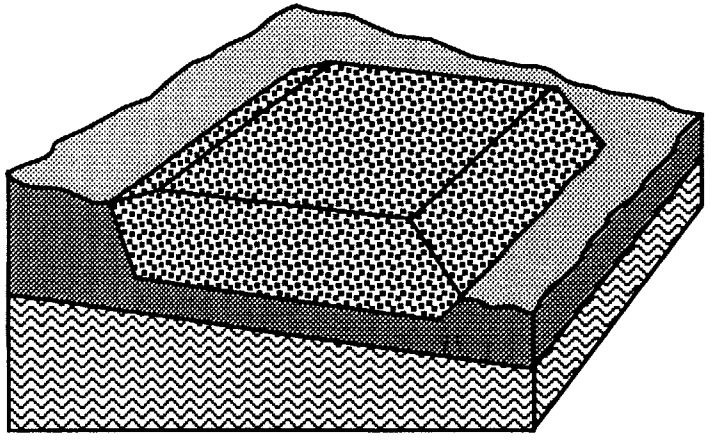

Sloping Ground

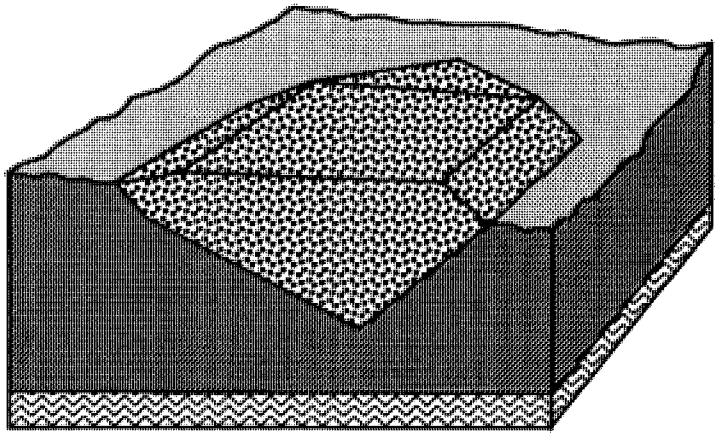

Canyon

Figure 3. Landfill Layouts for Various Topographic Settings

On rolling terrain, waste may be placed in valley landfills. With this layout, an important consideration is controlling surface water that naturally flows through the valley.

Reactor landfills are currently the subject of development research in several countries. These facilities have complex leachate and methane collection systems and also have systems for uniformly recirculating leachate throughout the landfill. The design objectives are to maximize waste stabilization, methane generation, and energy recovery. Advanced liner systems protect groundwater quality. At some point in the future, Hungarian landfills may regularly incorporate these features.

2.8.3 Sequential Filling Plan

A sequential filling plan is developed to assist the operator in filling the site to provide constant drainage of surface waters off of the landfill. It is also used to ensure that the site remains within the permitted area, and that when the site is full, the slopes on the top and sides are properly constructed to shed surface water but not too steep to allow final cover to be installed for recultivation of the area.

An efficient sequential filling plan has the following attributes:

1. The available landfill volume is efficiently and completely used.

2. The required amount of soil cover is applied without a need for extra soil to complete cells or layers.

3. Intermediate soil and (where appropriate) daily soil cover is sloped to encourage surface drainage of uncontaminated storm water runoff.

4. The placement of the initial waste layer on the landfill base is sequenced to limit the entry of uncontaminated storm water.

5. As subsequent waste layers are placed, daily cover is removed from the base of lifts as needed to allow vertical leachate drainage and to prevent sidewall leachate seeps.

6. Lifts within the landfill are arranged so that surface water drainage does not interfere with truck traffic patterns and waste patterns.

7. The lifts are developed in a sequence that provides for efficient truck traffic routes on the landfill.

Examples of a sequential filling plan are shown in Figure 4. The sequential filling plan should be prepared concurrent with the engineering design drawings. The site operator should be consulted during its preparation so that operational constraints and efficiencies are incorporated into the plan.

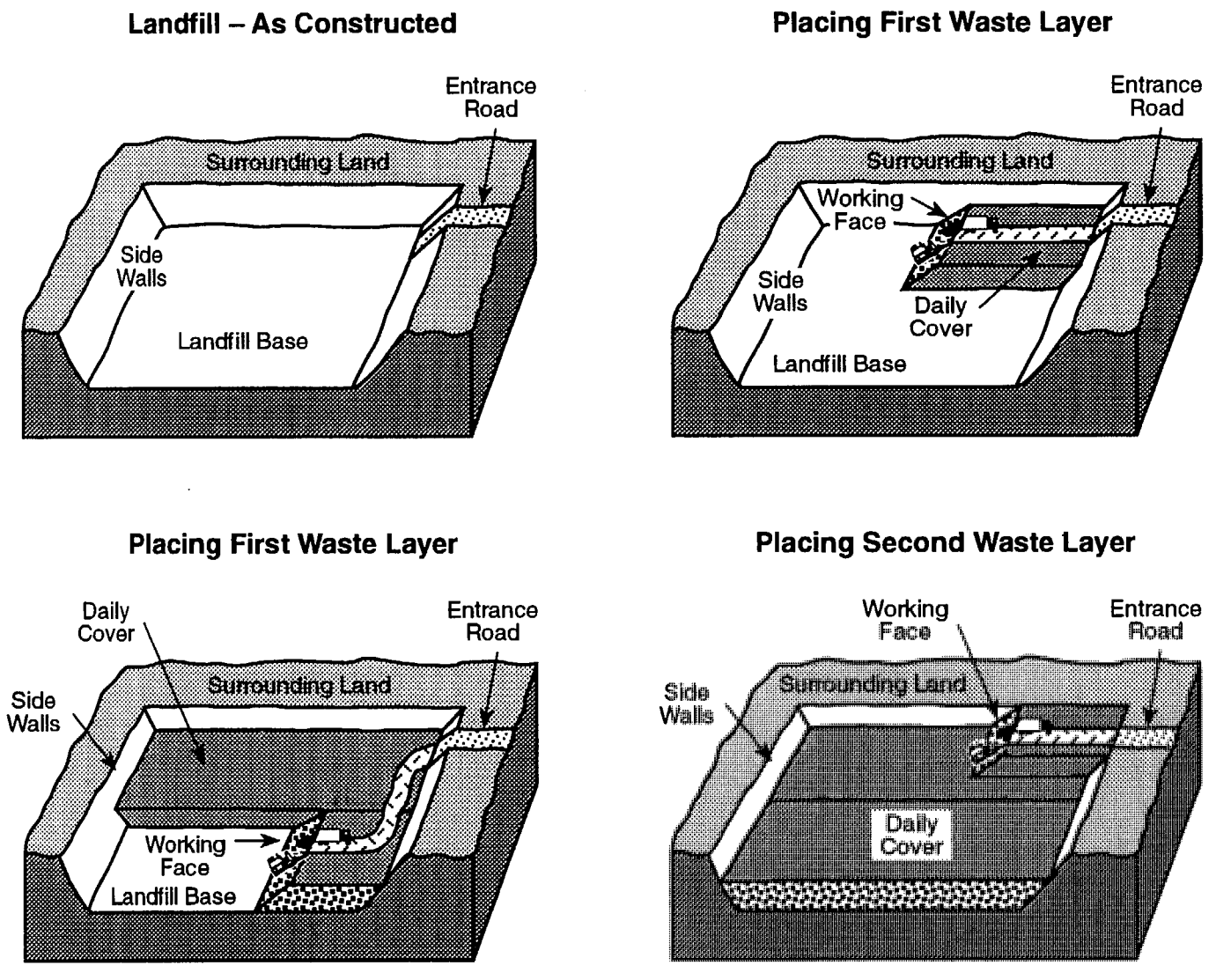

Figure 4. Sequential Filling Plans

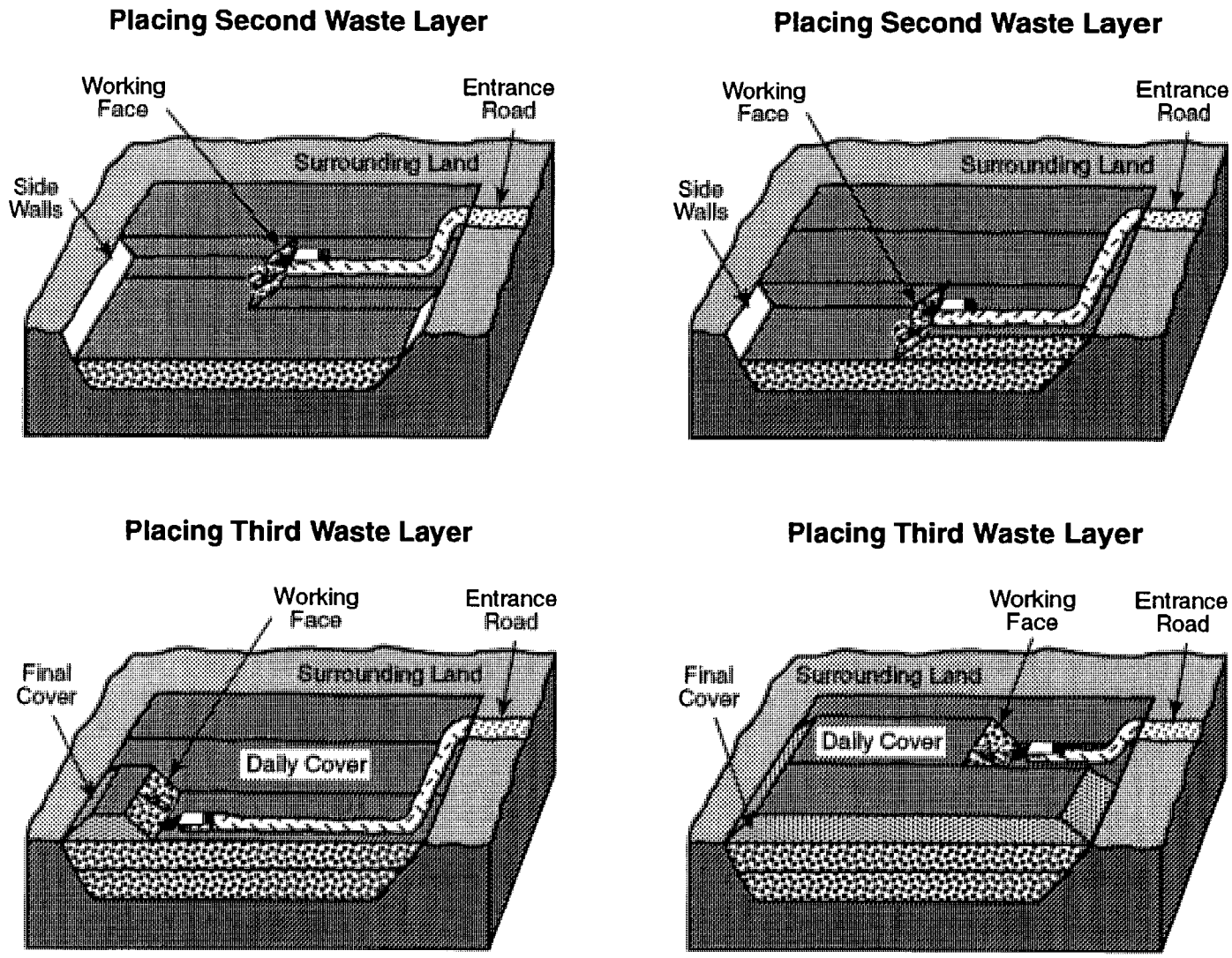

Figure 4. Sequential Filling Plans (continued)

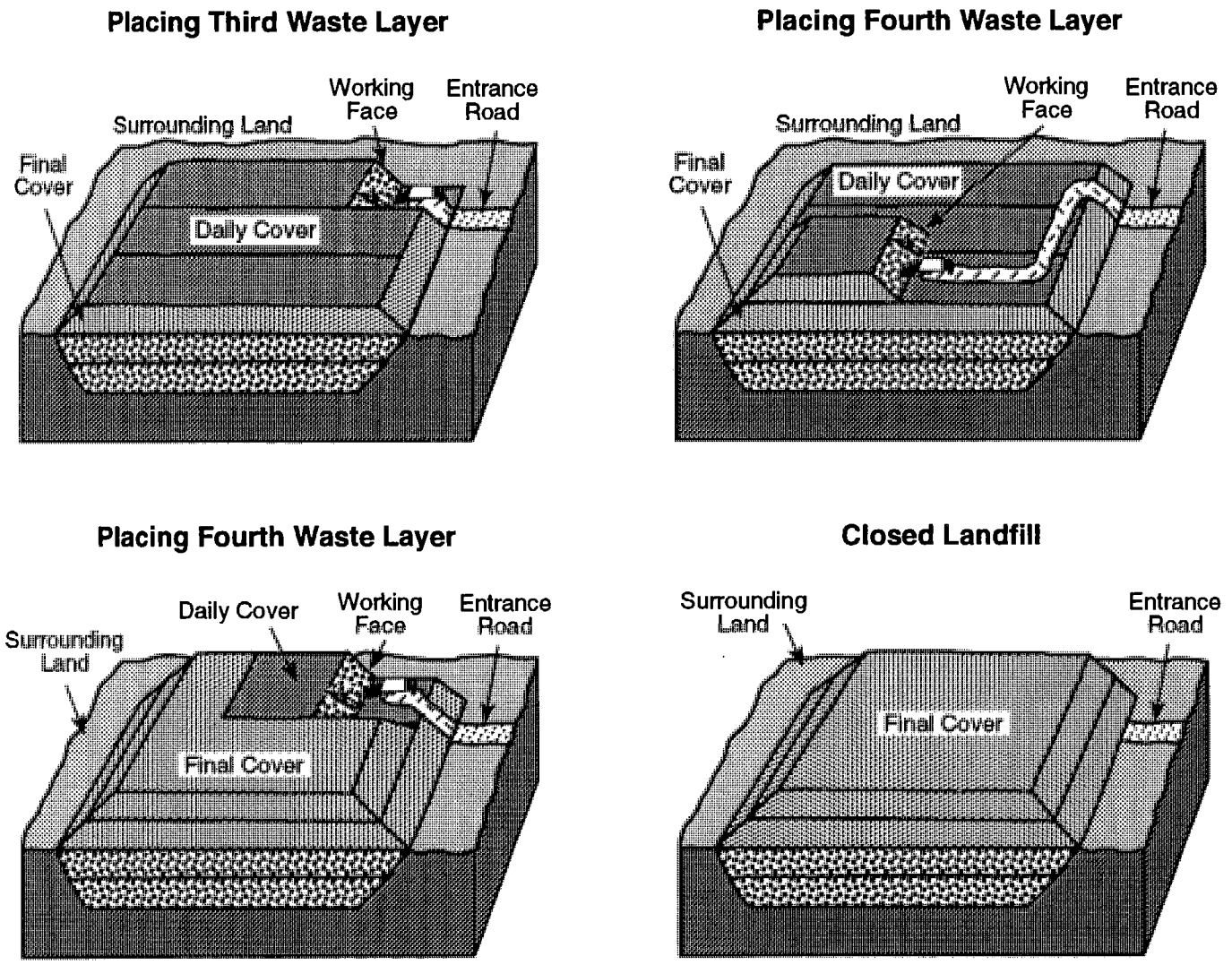

Figure 4. Sequential Filling Plans (continued)

If a plan is not available for an existing operating landfill, a plan should be prepared in order to make maximum use of the remaining site volume and to reduce future operational problems. Existing filling plans should be periodically reviewed and revisions made when operational experience has demonstrated the need to change the plan to increase efficiency.

2.8.4 Cell Layout

The cell is the common building block in sanitary landfilling. All waste received at the landfill is spread and compacted in a confined area. At the end of each working day, it is covered with a thin, continuous layer of soil, which is also compacted. The compacted waste and soil constitute a cell. A series of adjoining cells all the same height makes up a lift.

The dimensions of a daily cell will depend on the amount of waste placed and compacted on that particular day. Cell height is normally determined by the operator, the equipment, and the conditions of the site. In general, a cell height of 2 to 3 meters is recommended. A shallower cell will spread the waste too thin, result in a larger working face, and use more daily cover soil.

2.9 Placing Cover Material

Cover materials used at the landfill can be placed into one of three categories: daily, intermediate, or final. The type of cover is determined by the amount of time that the material is exposed. In general, *daily* has an exposure of one week or less, *intermediate* from one week to one year, and *final* more than one year.

2.9.1 Daily

The primary function of daily cover is to control litter, insects, birds, rodents, and fire. Generally, daily cover should have a compacted thickness of 15 centimeters and can be of any soil type. If possible, it should be applied to the top and side slopes as the daily cell is built, thereby leaving only the working face exposed. Although the use of low-permeability daily cover soil is desirable to control surface water, it is not required; sandy, more porous soil is also suitable. Lower-permeability soil should be stockpiled for use as final cover. The operator should stockpile all earth materials brought to the site for use as cover soil.

Daily cover will slow downward water movement through the landfill. Thus, leachate could seep out the side of the landfill with accompanying odor problems, water pollution, and destruction of vegetation. The normal approach for preventing leachate seeps is to remove all daily cover that is within 10 meters of the edge of the landfill before placing the next layer of waste. This procedure is very important when low-permeable soils, such as clay, are used for daily cover. The removed cover is reused at another location within the landfill.

2.9.2 Intermediate

Intermediate cover has the same functions as daily cover, with the addition of serving as a road base for constructing the next lift. Since intermediate cover must support traffic flow, it should be approximately 30 centimeters thick. Periodic regrading or repair of intermediate cover may be required due to erosion or traffic damage. Intermediate cover may be any soil type with sufficient structural properties to support truck traffic.

2.9.3 Final

The purpose of final cover is to reduce as much as possible the amount of water seeping into the landfilled waste. This is accomplished by using low-permeable soils, sloping to promote good drainage, and allowing growth of vegetation to prevent erosion and to encourage evaporation. Final cover is placed on the landfill when it has reached its design limits. After the landfill is completed, it is desirable to inhibit the infiltration of rainwater into the landfill. Therefore, final cover material should be a low-permeability soil such as clay or silt. The final cover soil should also support vegetation that will limit erosion from rainfall runoff and will evaporate water that has soaked into the soil. Figure 5 presents a schematic view of the final covering process.

The finished grades of the landfill are important and should be part of an operating master plan. To reduce erosion while also preventing ponding of water over the refuse, grades should be no greater than 1:3 and no less than 1:20.

2.9.4 Cover Soil

Many different soil types can be used as cover material. Daily cover is usually obtained at the landfill as a result of excavation to prepare the site. Where different soil types are encountered, the soils should be separately stockpiled. Topsoil should be reserved for use as the vegetative layer on the final cover. Lower-permeability soils, such as clay and silt, should be reserved for placement in the final cover below the vegetative layer. The remaining soil can be used as intermediate and daily cover.

A general guideline is that the amount of soil available from site excavation will be sufficient to build a landfill that extends above the ground two times the excavated depth. With careful soil management, the height may be extended to three times the depth. Consequently, shallow landfill operations will need to import soil as the height is extended.

The soil type of daily cover involves trade-offs. Less-permeable clays or silts will retard water entry into the landfill, reducing leachate generation. However, these soils tend to be harder to handle and to drive on during wet weather. Sandy soil is easier to work with but will allow more infiltration and leachate generation.

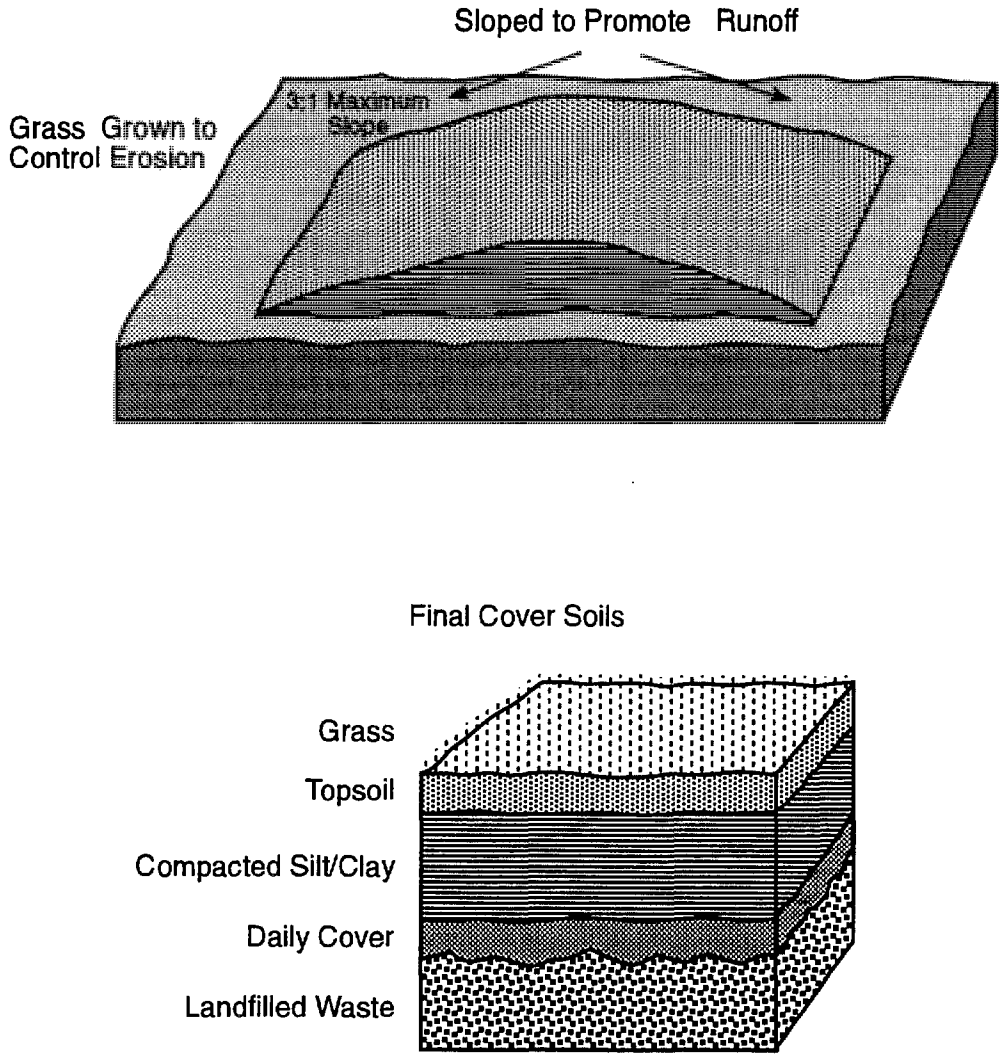

Figure 5. Landfill Final Cover

The site operator should establish special dumping areas for discarded soil that is brought to the landfill. Soil that is suitable for daily, intermediate, or final cover, and for on-site road construction, should be stockpiled for future use. This stockpiling can reduce the cost of procuring soil cover from other sources and also reduce the rate at which the landfill reaches capacity.

At some sites, cover soil that is suitable to support vegetation may be difficult and costly to obtain. An option that can make productive use of wastewater treatment plant sludges is to mix the available cover soil with sludge to form a high-organic-matter and nutrient-rich mulch that is better suited for establishing a vegetative growth. Mixing too much sludge can result in nuisance conditions, however. The appropriate mixture for dried wastewater treatment plant sludge is three parts soil and one part sludge by volume. If liquid sludge is used, the application rate must reduced below the point at which the soil/sludge mixture liquefies.

2.10 Scavenging and Recycling

Scavenging waste is dangerous for both the scavengers and landfill personnel. The operator needs to take measures to prevent the general, uncontrolled scavenging of the landfill, including maintaining the security fence and employing security guards to restrict access to the landfill. Any damage to the security fence should be promptly repaired by the operator.

Although general scavenging of the landfill should be prohibited, approved recycling of material can be permitted and even encouraged. Approved recycling companies should be allowed to remove recyclable materials at the landfill. They should, however, remove only designated material and not interfere with the operation of the landfill. The approved recyclers must wear brightly colored vests so the operator can identify unauthorized people scavenging materials.

2.11 Chapter Checklist

The landfill operations checklist is as follows:

1. Prepare a list of landfill operating rules (see Appendix B for an example).

2. What are the hours of operation for the landfill, and how is access controlled during non-operating hours?

3. Who is responsible for directing traffic at the landfill? Does this person have the proper training?

4. What are the procedures for recording waste quantities and vehicle identification numbers?

5. What directions does the gate attendant have for inspecting loads of waste to determine acceptability? What is the procedure if an unacceptable load is received?

6. What training do the equipment operators have regarding the planned landfill layout? Is there a day-to-day plan for waste placement and covering?

7. What soil materials are available for covering waste? Are they suitable for use as daily, intermediate, or final cover?

8. What are the procedures for controlling the scavenging of waste at the landfill?

3 ENVIRONMENTAL MANAGEMENT STRATEGIES

This chapter of the manual describes certain control measures that should be implemented to minimize the harmful environmental impacts associated with landfill operation. Common environmental concerns are shown in Figure 6.

3.1 Minimizing Surface Water

Pools of standing water caused by rainfall at the landfill site must be controlled to avoid operational and environmental impacts. The operational design should include provision for proper drains around the perimeter of the landfill for diversion of surface water runoff originating on adjacent property. These drains must be maintained by the operator.

Surface water originating within the landfill site can be controlled by the operator through proper placement of refuse cells and grading of impervious cover material to drain off the area being filled. The operator must, at all times, maintain a positive grade toward the drains to prevent ponding and standing water on completed portions of the landfill.

The surface water drained from the landfill should flow into a settling basin where suspended soil particles are allowed to settle out of the water before it is released from the property through perimeter drains. The settling basin should be designed by an engineer and needs to be large enough to hold all the water estimated to drain from the surface of the site.

3.2 Groundwater Protection

3.2.1 Leachate Generation

Leachate is a by-product of the decomposition of organic matter placed in the landfill. The amount of leachate generated is directly proportional to the amount of moisture in the waste when it was placed in the landfill and the amount of moisture added to the waste due to rainwater infiltration. Leachate generation can be controlled by reducing or eliminating the rainwater reaching the waste. Dumping liquid wastes into landfills is discouraged since doing so causes more leachate.

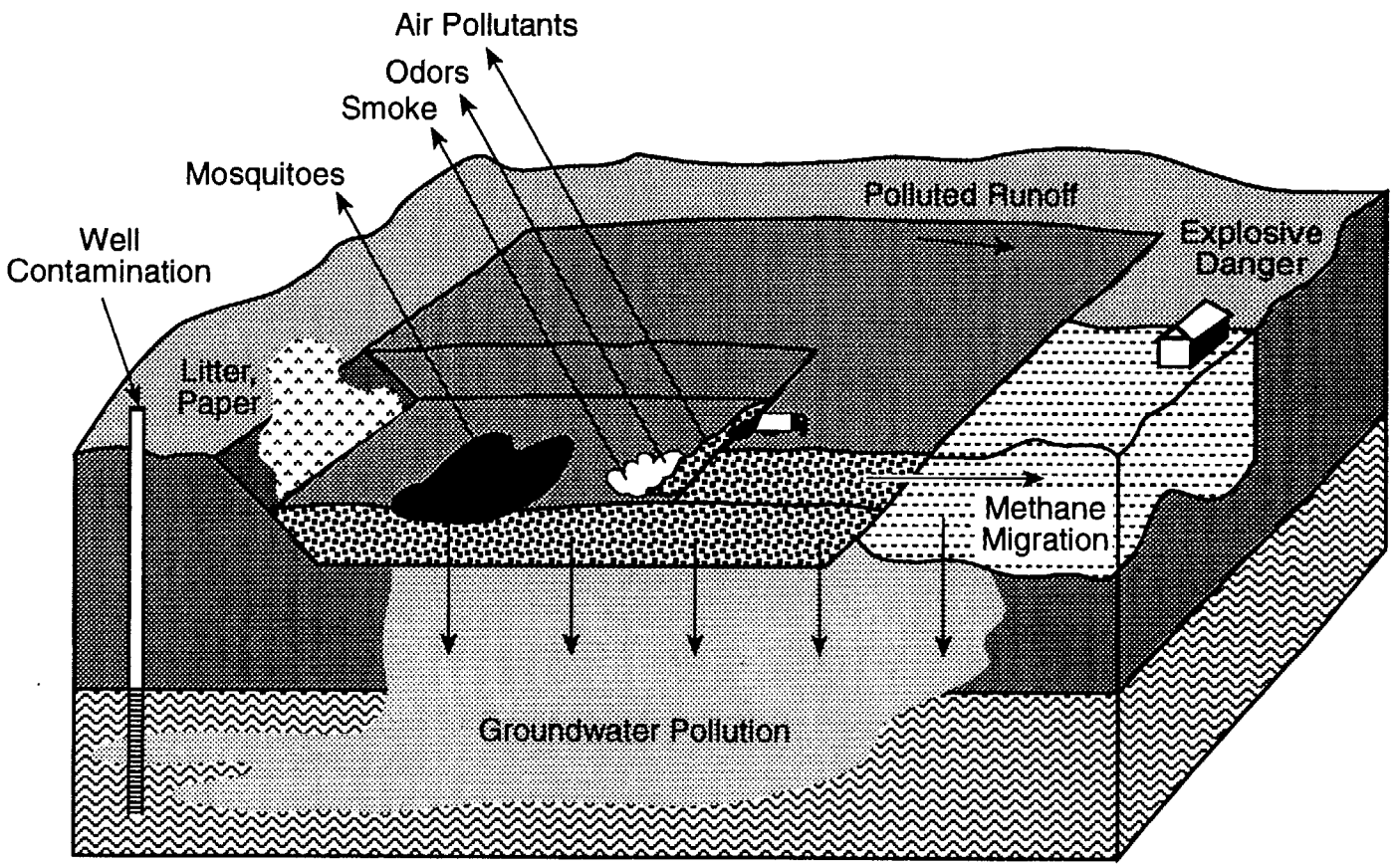

Figure 6. Landfill Environmental Concerns

Leachate generated by organic wastes is a strong pollutant and can cause serious surface or groundwater pollution problems. The decomposition process produces organic acids that dissolve many harmful materials in the waste, including heavy metals such as mercury, chromium, and cadmium. In addition to the by-products of waste decomposition, leachate may also include toxic inert materials that have been placed in the landfill, such as solvents, waste oils, or other liquid wastes. These products should be restricted from the landfill.

Although landfill leachate is a highly polluting, its impacts on water resources can be limited by properly designing the site and controlling surface water, preventing it from infiltrating into the waste.

3.2.2 Leachate Management

A landfill master plan should make provisions for the construction of leachate drains within the landfill and a leachate dam to retain and store the leachate and surface water that originates within the landfill. During most of the year, there will be insufficient rainfall to produce either leachate or runoff and the leachate dam will be empty. During the wet season, some runoff water and leachate will probably reach the dam. The construction of leachate dams on highly permeable soils should be avoided because excessive infiltration rates may cause groundwater contamination. If the dam has not reached its capacity as specified in the master plan, the liquid may be permitted to evaporate. If it is near its capacity, the liquid should be removed by the operator and recirculated on top of the landfill if the design permits, or disposed in a sewage treatment plant (if available and the treatment plant operator receives approval to do so). The liquid should also be promptly removed if nuisance conditions develop or mosquitoes become a problem.

Leachate reaching the base of the landfill may accumulate, build up pressure, and seep into the groundwater. In this situation, it may become necessary to install and operate leachate recovery wells to protect groundwater quality. Landfills operated on permeable soil formations pose the greatest threat to groundwater quality. Landfills on clay or silt formations should be given preference for expansion. Fractured rock formations are the least desirable for landfill expansion.

3.2.3 Leachate Treatment

Leachate removed from the collection system must receive treatment before being discharged into surface water resources. The high pollution potential makes leachate unacceptable for direct discharge. Treatment is most frequently accomplished by some form of biological process to reduce the BOD_5 and COD, and may be followed by chemical treatment to further lower heavy metal concentrations.

In communities served by an existing wastewater treatment plant that has the necessary capacity, leachate may be slowly discharged into the plant for processing. Appropriate flow equalization, along with biological and hydraulic loading rate limits, needs to be carefully established by the municipal wastewater treatment operator before leachate discharge begins. The treatment plant

operator may also deem it necessary to limit other chemical characteristics so that plant performance is not diminished.

If the existing wastewater treatment plant does not have sufficient biological treatment capacity, it may be necessary to establish a leachate pretreatment facility at the landfill, then discharge the partially treated leachate to the wastewater treatment plant. Figure 7 shows various types of treatment processes.

Where a municipal wastewater treatment plant is not available, the processes shown in Figure 7 can be upgraded to create a high-performance treatment plant that produces an effluent suitable for direct discharge to surface waters.

It should be noted that constructing and operating leachate pretreatment or complete treatment systems is technologically complex and usually expensive. Before a leachate treatment project begins, leachate generation rates should be monitored and, if possible, reduced. Pilot-scale treatment tests should be completed before design specifications are prepared. Operating histories of successfully operating treatment facilities should be located and studied.

Often the landfill itself appears to be an inviting place to put the leachate. A portion of the leachate may be recirculated back into the landfill to promote biological decomposition, but it must be recognized that during most of the year, this procedure will increase the amount of leachate that flows from the collection system. This measure also increases the chance that leachate may leak through the landfill's base into the groundwater or out the side of the landfill. Controlling odors during recirculation can also be challenging. If carefully implemented and monitored, leachate recirculation can enhance leachate management, but it cannot be solely relied on for leachate disposal.

3.2.4 Groundwater Monitoring Wells

Groundwater under the landfill should not come into contact with landfilled waste or the leachate that is produced during the decomposition of the waste. New landfills are now required to have a low-permeable soil or plastic liner installed at the base of the site to keep leachate from migrating into the underlying groundwater. Existing landfills cannot have liners installed but can be monitored by groundwater wells to determine whether any contamination of the groundwater is occurring under the landfill.

Groundwater monitoring wells should be located and installed as part of the operational design of the site. Generally, at least one up-gradient and three down-gradient wells are needed to obtain a groundwater sample for chemical evaluation. The degree of groundwater contamination reflects the effectiveness of the landfill operation and leachate management. General monitoring activities, including groundwater monitoring, are presented in Figure 8.

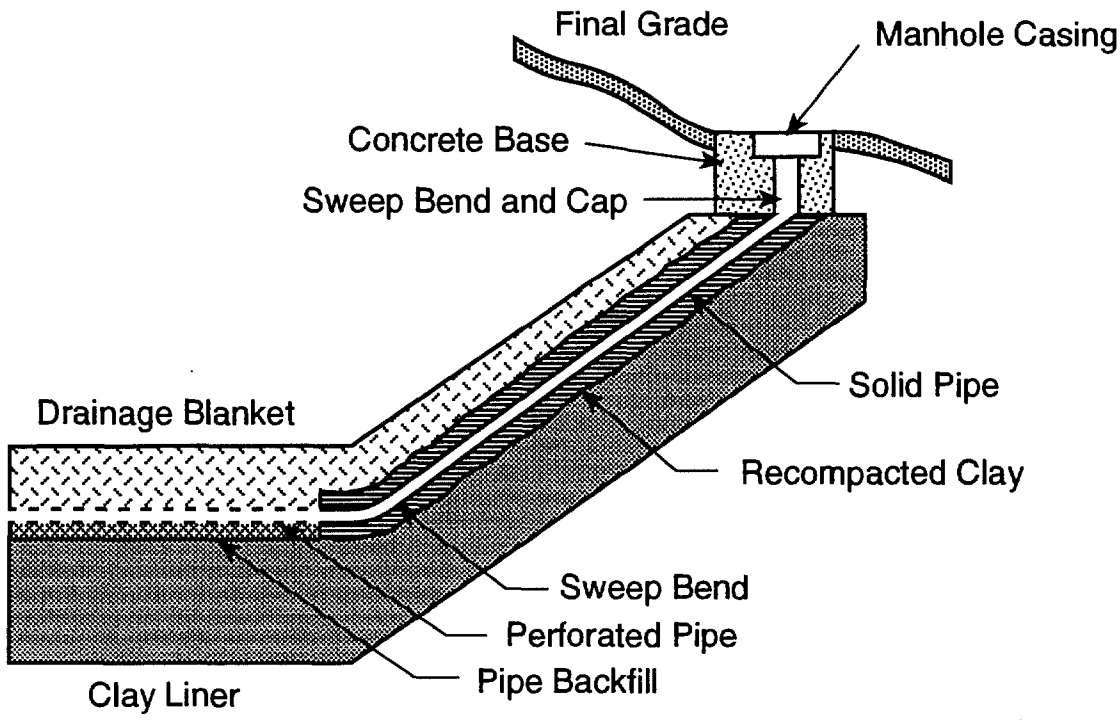

Source: P. Kmet, 1994.

Figure 7. Leachate Treatment Process

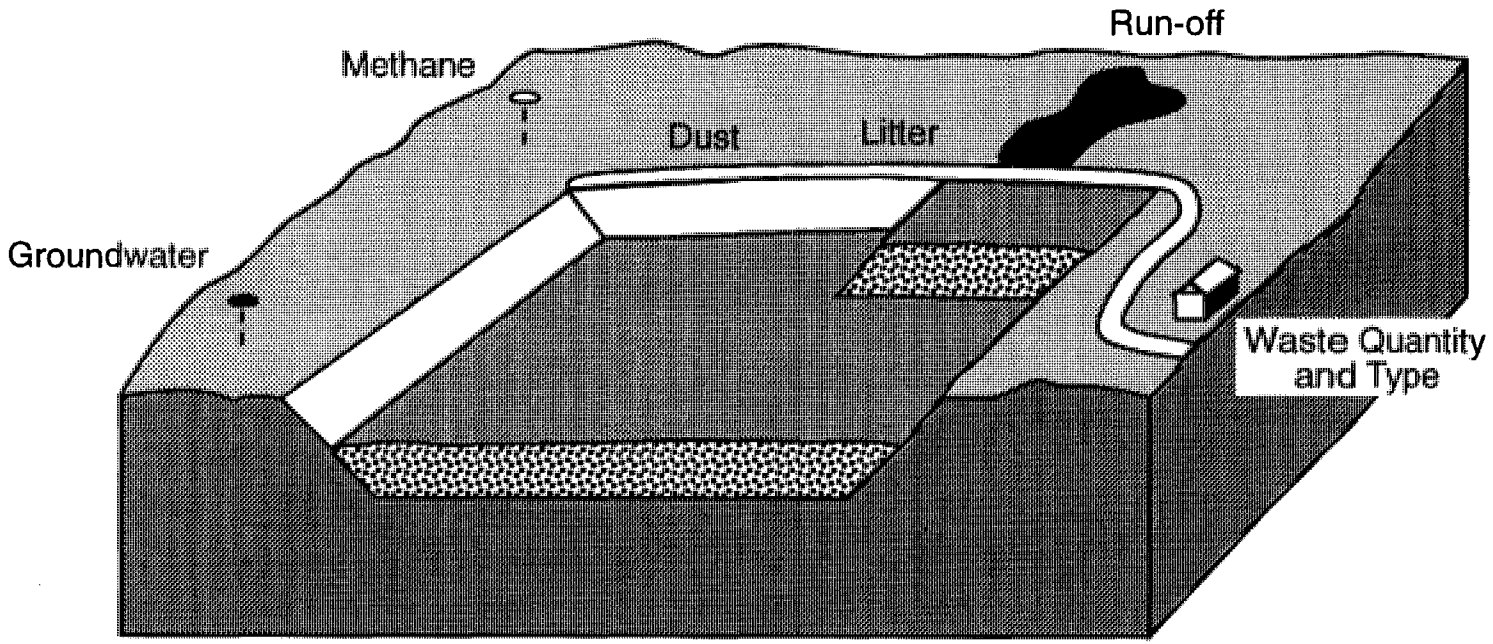

Figure 8. Landfill Monitoring Activities

Sampling and analysis should occur in the spring and the fall. If contamination is present, the owner should evaluate the extent of the contamination, and the potential damaging effects to drinking water supplies. Once the level of contamination has been evaluated, proper remediation measures can be developed to decrease the impact on the environment.

3.3 Controlling Landfill Gas

3.3.1 Generation

The same organic waste decomposition that generates leachate also produces methane gas. Although other gases (including carbon dioxide and hydrogen sulfide) are also produced during decomposition, methane is a more serious concern because in concentrated quantities it is explosive.

Methane gas is produced by the anaerobic bacteria that are active in decomposing organic matter. Theoretically, each kilogram of waste containing 75% organic matter will produce 0.4 m^3 of gas during its decomposition. The rate of decomposition depends on temperature and chemical conditions at the landfill. The anaerobic bacteria begin producing gas as soon as the waste is landfilled and the ambient oxygen is depleted, and may continue producing gas for as long as 20 years in some cases. As with the generation of leachate, moisture is the most important factor in methane gas production. In general, the higher the moisture content of the waste, the more methane gas will be produced, but even low-moisture waste will produce small quantities of methane gas. Therefore, the measures mentioned above to control water that infiltrates into the waste will also reduce the generation of methane gas.

3.3.2 Movement

The major difference between methane gas and leachate is that the gas is lighter than air and will rise through the waste and escape to the atmosphere through porous cover material. Thus, there is a conflict between managing leachate and managing methane gas. The low-permeability cover soils that restrict the infiltration of rainwater into the waste unfortunately also restrict the flow of methane gas out of the waste. These low-permeability cover soils cause gas to collect in pockets under the cover soil, where it can concentrate and reach explosive limits. If sufficient gas accumulates in the landfill, it can build up pressure and travel offsite, following geologic formations or utility trenches and possibly entering structures or homes located adjacent to the landfill. There are many instances of methane gas migration causing explosions in structures near landfills.

Methane may also damage the vegetation growing on or around the landfill. Discolored or dead vegetation can be one indication of significant methane concentrations in the soil profile.

3.3.3 Venting and Utilization

The finished landfill should be equipped with methane vents to collect methane gas and allow it to escape to the atmosphere. Details of the methane venting system need to be incorporated into the operational design of the facility.

Typical passive venting and barrier arrangements to limit underground migration at small landfills are shown in Figure 9. The basic operating principle is that pressure gradients and diffusion will transport the methane to the landfill's exterior for atmospheric release. Sand- or gravel-filled vertical risers, trenches, or layers have the lowest carrying capability. Perforated pipes placed under the landfill cover or installed vertically are more effective. Membrane sheets placed in the ground around a landfill can retard methane movement but are difficult to successfully install. Vertical layers of low-permeability soil placed around the landfill are the least effective. The pressure gradients and diffusion factors for all these passive methods are very low, limiting their effectiveness. Also, wet and freezing weather will reduce effectiveness. Passive vents provide only limited protection against underground methane migration. Landfills located less than 300 meters (150 meters for landfills of less than 2 hectares) from occupied buildings must be routinely monitored for subsurface migration.

Some landfill operators have found that passive vents do not provide sufficient migration control protection, or that the vented gas becomes an odor source. In this case, vacuum pumps can be connected to the vent pipes, inducing a pressure gradient that removes the methane from the landfill. Methane-burning flares may also be installed to reduce odors. Typical methane flares and vacuum pumping arrangements are shown in Figure 10. An important design consideration for installing passive vents is the capability to connect the vents to a vacuum pump in the future.

In larger landfills, methane gas is often burned as a fuel for heating or is used to power internal combustion engines, producing electricity. Most landfills in Hungary are too small to support such activities but these facilities should definitely be a consideration in the development of regional landfills. A variety of energy-recovery equipment is available under Hungarian patents and licenses.

3.3.4 Monitoring

The danger associated with underground migration of methane must be taken seriously. Methane migrating from a landfill can accumulate in buildings and underground structures. Persons entering these structures can be asphyxiated, and explosions can occur. Simple monitoring probes placed 2 to 5 meters into the ground can monitor methane migration (see Figure 11). If more than 5% methane is detected, a special migration control plan should be carried out by appropriately qualified specialists. Local fire department personnel are often trained to monitor explosive gases and should be consulted whenever there is a suspicion that methane is entering structures.

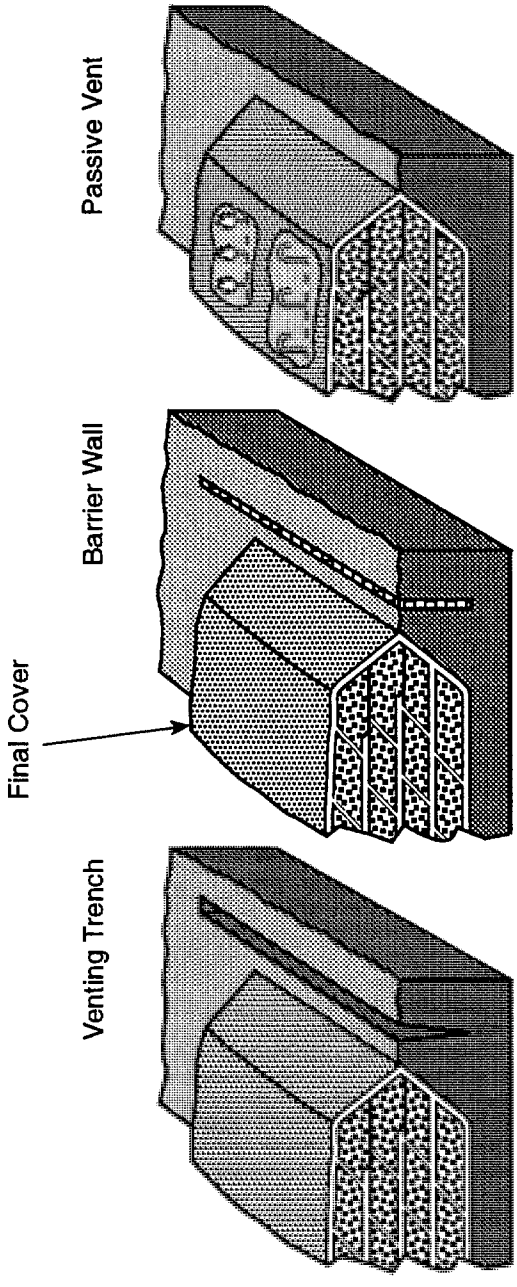

Figure 9. Methane Vents and Barriers

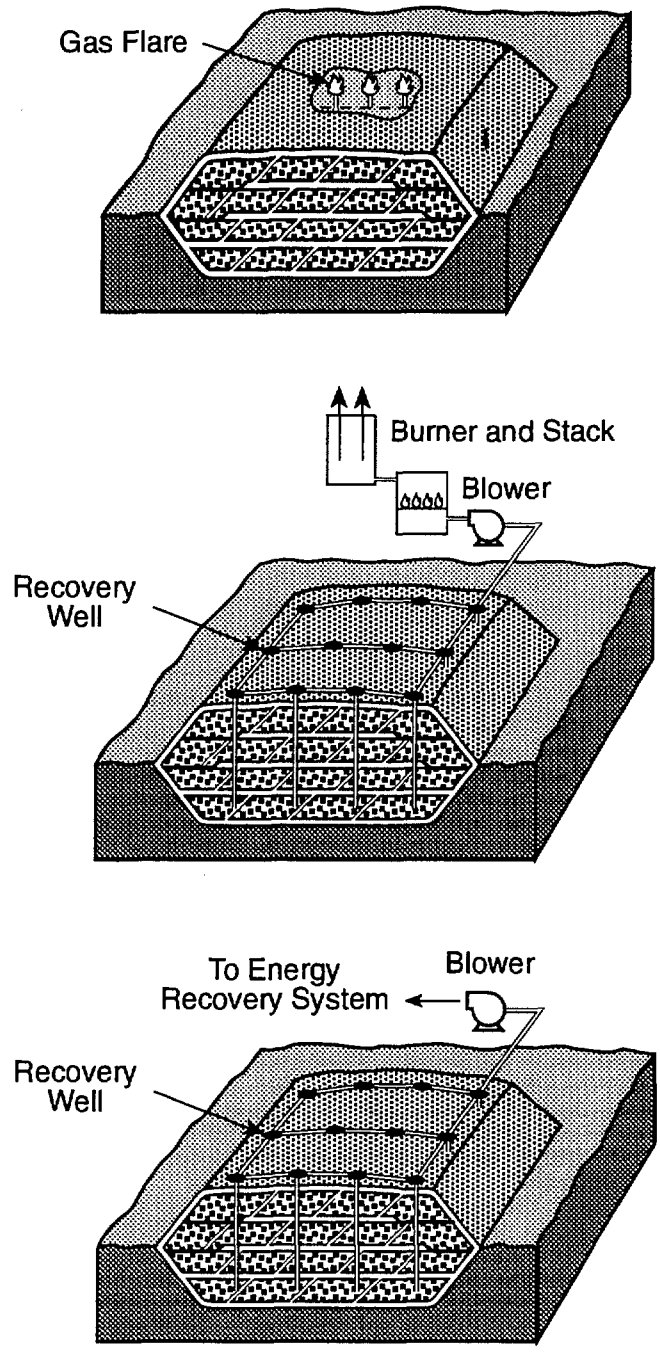

Figure 10. Methane Flares and Recovery Systems

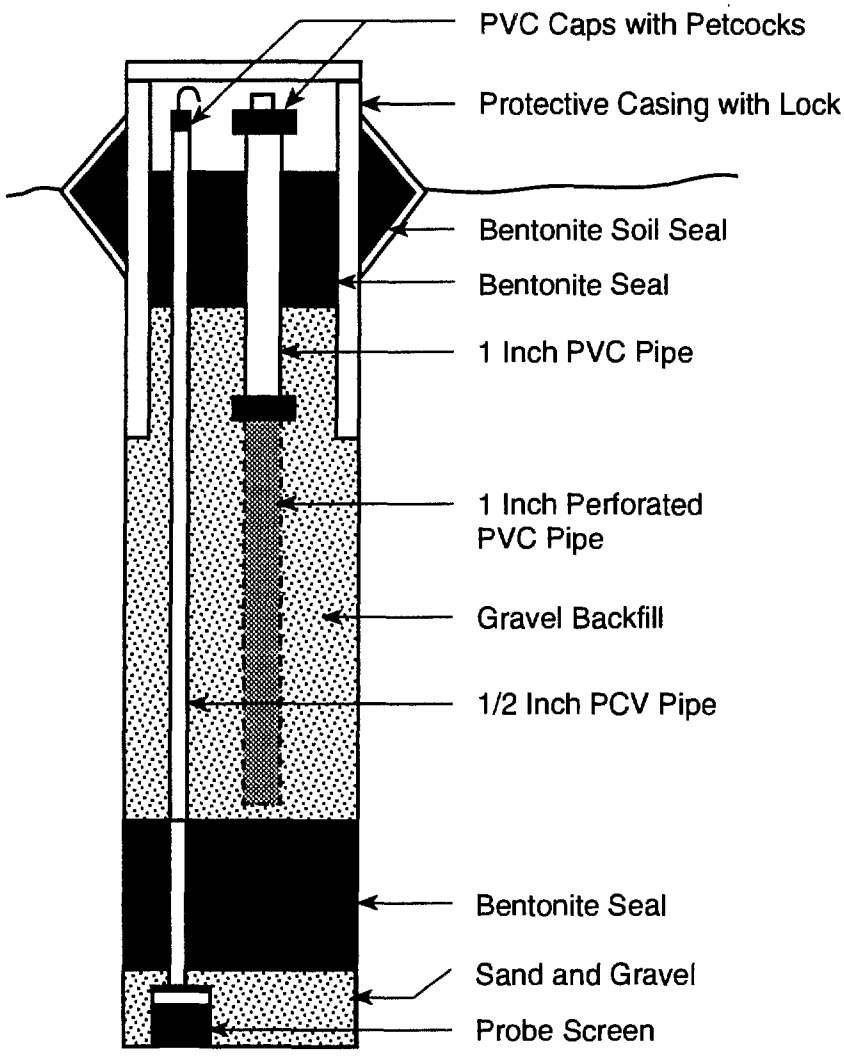

Source: University of Wisconsin-Madison Solid and Hazardous Waste Education Center, reprinted from *Waste Age* Correspondence Course articles, 1991-1992.

Figure 11. Methane Monitoring Probe

Rapid methane migration is often associated with rainy weather and falling barometric pressure conditions. Monitoring probes should be checked more frequently during these conditions. Many landfills monitored during sunny, warm conditions gave no indication of methane migration problems. Unfortunately, explosions have occurred that, when investigated, were found to be the result of methane migration associated with changing weather conditions.

3.4 Dust, Mud, and Litter Control

3.4.1 Dust

Airborne dust results from traffic using the site and from the equipment used to operate the facility. Dry summer months and some dry winter periods can create severe dust problems unless the operator develops a program to combat the situation. Dust can cause excessive wear of equipment, create a health hazard to personnel at the site, annoy owners of adjoining land used for other purposes, increase accident rates, aggravate allergies, and cause poor public relations.

The most commonly used method for dust control is watering the access road when needed. Watering should not be so excessive that it causes mud problems, but should be enough to keep dust from polluting the air surrounding the landfill.

Another effective way to control dust is to apply calcium chloride on access roads. Calcium chloride applied in liquid solution form or as flakes or pellets hardens the roads, absorbs moisture from the air, and keeps the dirt road relatively dust free.

Under no circumstances should used crankcase or other waste oils be used to control dust. The oil could cause environmental problems and should be recycled by appropriate methods to protect the environment.

3.4.2 Mud

Mud is difficult to control at a landfill. Rainy periods will create a very soft surface on the landfill and repeated truck traffic grinds the water and refuse together to create deep mud. Maintaining access roads with a crown that is higher than the surrounding refuse will help to shed water to the sides of the road and lessen the mud problem.

Rain obviously can cause operational problems at the landfill. Nevertheless, the operator should take measures to ensure access to the landfill face at all times. Gravel or construction rubble may be needed to stabilize access roads during muddy weather.

Another useful material that can be used as a road binder during wet weather is coal cinders, which create a moderately long-lasting road surface. The cinders are simply dumped and graded on top

of the existing access road. One drawback to using cinders is the dust that is created during dry weather.

3.4.3 Litter

Litter is always a problem at even the best-operated landfills. This is the most common public complaint about landfills. Litter is caused by winds picking up paper and plastics from loads of waste as they are dumped and then scattering them across the landfill surface and into surrounding trees and property. Littering also occurs when users of the site do not cover their loads as they travel to the site.

Reducing the litter problem can be accomplished by requiring users to cover their loads or by charging an extra fee for uncovered loads.

Blowing litter can be minimized by keeping the working face as small as possible and applying daily cover as stipulated herein. The operator is responsible for daily clean-up of litter, including clearing litter from all fences and periodically cleaning up litter that has blown off the site onto adjoining land.

At the landfill, litter control can be achieved by changing operational areas during windy weather to an area that is reserved for this purpose. It can be a working face that is in a low area protected from the wind. Waste can be pushed up the slope to keep it out of the wind.

Windblown litter can also be caused by inadequate compaction and covering by the landfill operator. As waste loads arrive, the operator should immediately spread and compact the waste and cover with soils during windy weather.

Using portable litter fencing around the working face is also useful in controlling the wind-blown litter and keeping it close to the working face.

3.5 Reducing Noise and Odors

Noise and odors are also common complaints from residents living near landfills. Both can be controlled through proper operations and equipment maintenance.

Noise results from the operation of the landfill equipment and trucks that use the site for waste disposal. Site developers can lessen noise at a site by planting trees and shrubs at the boundaries of the landfill to act as noise buffers. Operators can also provide effective noise control in residential areas by filling the site in a way that creates a mound of refuse between the active portion of the site and the neighboring residents. Soil can also be used to build a berm between the active area and the residents. The berm can be incorporated into the design of the facility so it is later used as one side of the site.

Noise from equipment used at the site is controlled through proper maintenance and the use of mufflers on the exhaust pipes. The berms and filled areas will also lessen the noise from equipment.

Odors result from improperly covered waste and leachate seeps on filled areas of the site. Waste should be covered daily to prevent odors, especially during the warm summer months. The operator should also be aware of any areas on the site where cover soils might be eroding, thereby creating the potential for uncovered, odorous wastes. The site should be checked weekly for erosion and more frequently during rainy weather.

3.6 Vector Control

Vectors can be a great nuisance and public health problem at any improperly operated landfill. Flies and mosquitoes are two types of insects of primary concern because they both spread disease and are a nuisance. Flies spread many food-borne diseases, such as salmonella, by physically carrying bacteria from the waste to food.

Mosquitoes breed in water that collects in depressions on the landfill surface, and in uncompacted and uncovered wastes such as tire piles and bulky items. Mosquitoes carry diseases such as encephalitis and malaria. Control involves compacting and covering wastes, filling depressions where rainwater will collect, and eliminating breeding areas.

Rats and other rodents spread diseases such as rabies, rat-bite fever, typhus, and plague. Rodents are brought to the site in loads of waste or migrate from surrounding areas. They remain at the facility if there is food, shelter, and water. Covering the waste daily, properly compacting it, and filling the site to shed water will eliminate the three items rodents need for survival. If infestation is persistent, the use of poisons by a licensed applicator can be very effective in eliminating a rodent population. However, these should be used cautiously since pets and children from the surrounding area could come into contact with the poisons. If poisoning or trapping of rodents is required, the operator should post signs that inform all landfill employees and approved recyclers of the program.

3.7 Preventing Fires

Landfill fires are very difficult to put out once started because of the lack of water at the site. A fire may start if paper touches the exhaust pipes of a vehicle, if hot heating residue is dumped into the waste, or if scavengers light fires. Open, unregulated burning is now illegal because it is a source of uncontrolled air pollution and is incompatible with landfill disposal practices. Therefore, burning of any refuse should be strictly prohibited in all areas. Separate areas for tire storage also should greatly reduce the potential for major fires at the landfill.

During the cold winter months, fires occur more frequently because collection vehicles often collect waste that contains hot heating residue. As described in Chapter 2, this is called a hot load. Under

no circumstances should a hot load be dumped in the active area of the landfill. The operator should designate a hot-load area where the load can be dumped and extinguished before being placed in the landfill.

Proper compaction and soil cover effectively eliminate the source of surface fires. The operator should be conscientious about compaction and covering to lessen the possibility of fires at the site.

The operator should always be on the lookout for fires. If one starts, the operator should extinguish it as soon as possible using either cover soil or water. Covering with soil is often much more effective than spraying with water. If the fire cannot be extinguished quickly, the operator should contact the local fire department to extinguish it.

Radio communication is essential for proper fire control, and local fire departments should be contacted whenever any fire occurs. It is recommended that all landfill equipment be equipped with radios and fire extinguishers to use for waste and/or equipment fires. Automatic fire suppression systems should be installed on all new landfill equipment that will be working on top of the waste.

3.8 Chapter Checklist

The environmental management strategies checklist is as follows:

1. What are the most important existing environmental concerns at the landfill?

2. List no-cost and low-cost changes in landfill practices that can be introduced to improve environmental conditions at the landfill.

3. List improved management practices that will require significant investments in capital and human resources. What equipment needs to be purchased?

4. What methods of financing landfill environmental control equipment are currently available to the landfill?

4 EQUIPMENT

4.1 General

A properly operated landfill must have the correct equipment to maintain the site in an efficient and environmentally safe manner. Since money spent on equipment is a large capital investment and is a significant portion of landfill operating costs, the equipment selection should be based on a careful evaluation of the functions to be performed.

4.2 Equipment Functions

4.2.1 Waste Handling

Although the handling of waste at a landfill appears similar to earthmoving, there are significant differences that require special consideration. Solid waste is less dense, more compactible, and more heterogeneous than earth. Handling a given volume of solid waste requires less energy than for an equal amount of soil.

4.2.2 Waste Compaction

The compaction of waste is an essential task at all landfills. Compaction is accomplished through the use of a tracked bulldozer, landfill compactor with steel wheels, rubber-tired front-end loader, or tracked front-end loader. As open burning of waste is no longer allowed, the compaction equipment must be used as efficiently as possible to handle the extra waste volume.

The machine should spread the waste in thin layers. Once the waste has been spread, the machine should run over the entire area at least three times to provide proper compaction. Although the waste is more compactible than soil in terms of initial density versus compacted density, the actual compaction is more difficult to achieve and requires large compressive forces and multiple passes. A large, heavy machine is preferred over a small, lighter machine that would require more passes to accomplish the same result. Figure 12 shows the relationship between the number of passes and the density of waste in the landfill.

Previous Page Blank

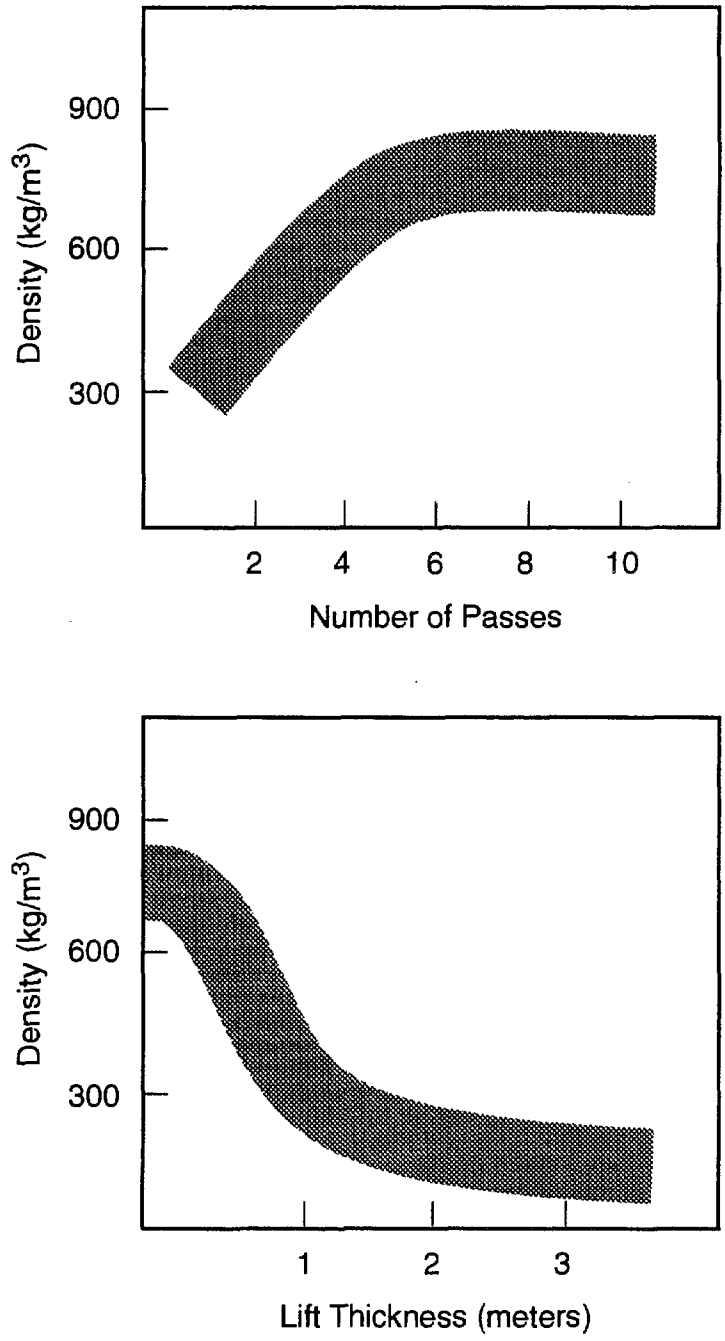

Figure 12. Landfill Waste Densities

The waste deposited at the working face of the landfill should be spread and compacted with a machine as soon as the waste is received. This helps keep litter in control and also provides for an orderly site.

4.2.3 Cover Material Handling

Cover material is handled through the use of a front-end loader that can also be used for compaction, as discussed above. The loader will scoop the soil up in the bucket and deliver it to the daily working face, where it dumps the cover soil on the waste. The soil should be spread evenly and compacted with the machine. It is important to make available to the landfill operator enough earth-moving equipment to get the work done each day.

4.2.4 Support Functions

In addition to handling of refuse and cover material, landfill equipment must also be provided for several support functions. These include access road construction and maintenance, dust control, fire protection, and site administration. Many of these functions can be supported by equipment that has already been mentioned, but others may require specific additional equipment.

4.3 Required Equipment

In consideration of the above function descriptions, the following equipment is the minimum recommended for use at a landfill:

1. Steel-wheeled compactor - for compaction of refuse and cover soil, or

2. Track bulldozer, D6 or D7 - for excavation of cover soil, spreading and compaction of cover soil, road construction, and as a backup to the steel-wheeled compactor for compaction of refuse

3. Rubber-tired loader - for placing of cover soil, loading/unloading of refuse, stockpiling of cover soil, road construction, and litter cleanup

4. Radio communication system - for communication between the main office and key operational locations at larger landfills.

The absolute minimum equipment at a landfill would be a rubber-tired loader. This machine does not provide the compaction that a track bulldozer or steel-wheeled compactor does, but it answers the basic needs for landfill operations at a small site. A larger landfill should, at the very minimum, have a track bulldozer for pushing the waste into the working face, compacting waste, and placing cover soils delivered to the site.

4.4 Equipment Maintenance and Safety

The operator should be responsible for maintaining all landfill equipment. A written preventive maintenance program in accordance with manufacturers' recommendations should be prepared. Routine maintenance items include fuel, oil, lubricants, filters, etc. The operator should keep a maintenance log for each piece of major equipment.

The operator must also ensure that all equipment is operated safely and properly. Table 1 includes a list of equipment safety considerations.

Table 1. Safety Suggestions for Sanitary Landfill Equipment Operators

Check equipment before starting	Avoid side-of-hill travel
Use steps and handholds	Do not crush sealed containers
Keep steps clean	Go carefully over bulky items
Inspect area before moving	Check work area
Operate from driver's seat	Park on level ground
Wear seat belts	Lower attachments to ground when parked
Never mount moving equipment	Never jump from equipment
Allow authorized passengers only	Avoid leaving equipment unattended
Keep bucket or blade low	Always have adequate lighting
Check blind areas	Clean equipment before repairing
Keep enough clearance	Remain in seat during equipment adjustments

4.5 Chapter Checklist

The equipment checklist is as follows:

1. What is the function of each piece of landfill equipment?

2. What are the minimum pieces of a equipment with which a landfill can be operated?

3. What procedures should be employed to ensure employee safety?

5 PERSONNEL

An efficiently operated and environmentally sound landfill requires well-trained personnel who are aware of their responsibilities and have received sufficient training to perform them.

5.1 Job Descriptions

Personnel requirements will vary at each landfill based on its size and operating hours. In general, landfill personnel will include the following:

1. Landfill managers: Responsible for overall site operations, assignment of personnel, cost controls, and performance evaluation. Must also have a labor safety certificate, as defined by their supervisory body, which enables them to deliver labor safety training to the operating personnel. Landfill managers also have to have an excellent working knowledge of all of the rules and regulations related to the proper operation of a landfill. This includes knowledge of the types of waste permitted at a communal solid waste landfill, environmental protection requirements, and proper operation of landfill equipment. They must be able to provide periodic training of landfill personnel.

2. Shift supervisors: The on-site supervisors of the landfill operation. Monitor and maintain the machinery and equipment, but their main duties are to make sure all records, actions, and problems are properly recorded every day. The shift supervisors report to the landfill manager; there will be one supervisor for each shift employed at the site.

3. Skilled equipment operators: Staff who operate complex equipment and maintain highly technical systems and equipment.

4. Unskilled (semi-skilled) workers: Personnel who perform, in accordance with their specific job description or the instructions received from the landfill manager and/or shift supervisor, all tasks that are necessary for the operation and maintenance of the landfill.

5. Additional workers: Staff who perform a variety of tasks depending on the size, operation, equipment, development, etc., of the landfill. For example, they might post-sort, check, or package selectively collected wastes.

The minimum staffing for proper operation of a communal solid waste landfill is a landfill manager, a skilled equipment operator, and an unskilled (semi-skilled) worker.

5.2 Fitness for Job, Personnel Restrictions

The machinery and equipment of the landfill may be operated only by suitable and physically fit workers. The landfill manager must ensure that all workers have pre-employment and periodic medical examinations in accordance with the provisions of the relevant regulations.

Examples of relevant regulations covering medical examination are:

- section 53 of the Labor Code,
- section 39 of the No. 47/1979 - decree of the Council of Ministers,
- no. 47/1981 - decree of the Minister of Health,
- no. 4/1962 (IV.5) - decree of the Minister of Labor on the protection of the physical fitness of women and juveniles,
- no. 4/1966 (X.21) - decree of the Minister of Labor on the protection of the physical fitness of women and facilitating the protection of their health, and
- no. 12/1972 (VII.1) - decree of the Minister of Health on the pre-employment medical examination and report.

5.3 Job Training

All landfill employees should receive training in the general operation of the landfill and the specific tasks of their job title. Their training should include general environmental and physical features related to landfill operation. They should be instructed on the related health impacts of handling solid waste. All employees should be trained to identify various types of waste and their special handling. Specifically, all employees should be advised of the potential health impacts due to handling waste that may contain hazardous or medical wastes.

5.4 Chapter Checklist

The personnel checklist is as follows:

1. What are the job descriptions for the various landfill employees?
2. What are the applicable personnel regulatory standards?
3. What job training must an employee receive before starting work?
4. What on-going training should landfill employees be provided?

6 ADMINISTRATION

The operation of the landfill should be responsibly administered. Administrative tasks include daily operations, cost documentation and control, performance evaluation, personnel management, and public relations.

6.1 Cost Documentation and Control

The operator is responsible for documenting all landfill costs, including labor, supplies, and maintenance. The operator should prepare a summary of all costs incurred on a monthly and annual basis and submit it to the proper authorities.

Knowing the amount of waste received at the site is useful for calculating the cost of using the site based on a fee per cubic meter or kilogram if a weighbridge is available. The annual cost of the operation of the site can be divided by the amount of waste received to arrive at the unit cost of operations.

Establishment of appropriate fee schedules can ensure a certain level of cost recovery at the site. If possible, tipping fees should include an additional amount over the actual cost of operations so that funds can be put into a restricted capital fund for future closure costs of the site and the development of a new landfill once the present one is filled to capacity.

Information obtained during the recording of waste received can be used to levy charges to neighboring towns if the landfill is owned and operated by one local government and used by others. In this case, the owner can charge other users fees which include "impact fees" or "host community fees."

Cost documentation and solid waste budgeting are more fully addressed in the LEM project's manual *Enterprise Budgeting for Solid Waste Activities.*

Previous Page Blank

6.2 Performance Evaluation

The operator should undertake a performance evaluation of total landfill operations at least twice per year to determine conformance with operating procedures and to identify any specific areas or types of waste where changes are warranted in either performance specification or cost of service.

6.3 Personnel

The operator should establish procedures for personnel review, including job performance, advancement, warnings for substandard performance, and removal.

6.4 Community Relations

The landfill manager should make a concerted effort to maintain good relations with the general public, especially those who live or work in close proximity to the landfill. Shown below is a list of activities which may assist in the promotion of good community relations:

1. Maintain the landfill site in the best condition possible.

2. Pick up litter along adjacent roadways.

3. Quickly respond to any complaints received by the landfill manager, other employees, or by community officials. Maintain a written record of complaints and responses.

4. Periodically distribute information regarding landfill operations to neighbors. Possible methods include newsletters, newspaper articles, public meetings, and personal visits.

5. On a regular basis, inform community leaders about landfill operations. Report the status, problem areas, plans and needs for improvements, and recent successes.

6. Provide the above information to major customers so that they are prepared to support the landfill manager's efforts.

7. Conduct facility tours for local officials, civic organizations, schools, news organizations, and other groups to provide a better understanding of the landfill's operation.

8. Announce any planned operating changes and the need for the changes well in advance. Provide an opportunity for community input before final decisions are made.

9. Have designated in advance the person who will communicate with the press if an accident or crisis should occur. Answer questions with facts. If an answer is unavailable, indicate

when more information will be available. Have ready for distribution some simple literature which describes a landfill's operation.

The objective of the recommended activities is to establish community dialog regarding the landfill's operation. If problems do occur, the community then may understand the situation more quickly and support proposed solutions.

6.5 Chapter Checklist

The administration checklist is as follows:

1. What cost documentation should be prepared for operation of the landfill?
2. What are the employee performance evaluation standards?
3. What should be done to maintain good community relations?

APPENDIX A

Hungarian Rules and Regulations Applicable to the Development and Operation of Communal Waste Landfills

I. Acts

1. Act XX of 1949 on the Constitution of the Republic of Hungary

Loc. cit.:	Para 18. and 70/D
Amended:	Act I of 1972
In:	Magyar Törvénytár (Hungarian Code of Laws), volume I., p. 7. Hatályos Jogszabályok Gyûjteménye (Collection of Laws in Force), vol. I., p. 9.

2. Act III of 1964 on Construction Affairs

Loc. cit.:	Para 2., 15., 22., 29., 36-37. and 39.
Amended:	Law Decree No. 10. of 1985 Law Decree No. XXII. of 1990 Act XX. of 1991 Resolution No. 11/1993. AB of Constitutional Court
See also:	Government Decree 30/1964 (XII.2.), (37) Decree No. 2/1986 (I.27.) ÉVM, (74) Decree No. 12/1986 (XII.30.) ÉVM, (75)
In:	Hungarian Code of Laws, volume I., p. 238. Collection of Laws in Force, vol. I., p. 232.

3. Act IV of 1964 on Water Affairs

Amended:	Law Decree No. I. of 1984 Act LXVIII. of 1990 Act XX. of 1991 Act XXXIII of 1991 Act XXXIX of 1991
See also:	Government Decree 32/1964 (XII.13.), (28) Decree No. 2/1980 (I.16.) OVH, (125) Decree No. 3/1982 (III.12.) OVH, (127) Decree No. 3/1984 (II.7.) OVH, (128) Decree No. 4/1984 (II.7.) OVH, (129)
In:	Hungarian Code of Laws, volume I., p. 247. Collection of Laws in Force, vol. I., p. 241.

55

4. Act I of 1968 on Petty Offenses

Loc. cit.:	Para 89., 98., 99/A. and 108/D - 108/G.
Amended:	Law Decree No. 10. of 1979
	Law Decree No. 10. of 1983
	Act XX. of 1991
See also:	Government Decree 17/1968 (IV.14.), (39)
In:	Hungarian Code of Laws, volume I., p. 322.
	Collection of Laws in Force, vol. I., p. 319.

5. Act II of 1972 on Health Affairs

Loc. cit.:	Para 6., 8., 10-11., 20-21. and 60-62.
Amended:	Act I. of 1981
	Act XXII. of 1990
In:	Hungarian Code of Laws, volume I., p. 437.
	Collection of Laws in Force, vol. I., p. 422.

6. Act II of 1976 on the Protection of the Human Environment

Amended:	Act No. 5. of 1979
	Act XX. of 1991
In:	Hungarian Code of Laws, volume II., p. 165.
	Collection of Laws in Force, vol. II., p. 214.

7. Act VI of 1977 on State-Owned Companies

Loc. cit.:	Para 46.

8. Act I of 1987 on the Land

Loc. cit.:	Para 59-66.
Amended:	Act XIX of 1989
	Act LXXXVIII. of 1992
In:	Hungarian Code of Laws, volume II., p. 364.
	Collection of Laws in Force, vol. II., p. 378.

56

9. Act LXV of 1990 on Local Governments

Loc. cit.: Para 1., 8., 13., 16., 22., 24., 46-47., 49. and 107.
Amended: Resolution No. 18/1993 (III.19.) AB of Constitutional Court
In: Hungarian Code of Laws, volume III., p. 44/20.
Collection of Laws in Force, vol. III., p. 156.

10. Act XX of 1991 on the Scopes of Duties and Authorities of Local Governments and Their Organizations, of Mandatory Institutions of the Republic, and of Certain Central Subordinated Organizations

Loc. cit.: Para 84. and 85.
In: Hungarian Code of Laws, volume III., p. 44/212.
Collection of Laws in Force, vol. III., p. 345.

11. Act XXXIII of 1991 on the Transfer of State Property to Local Governments

Loc. cit.: Para 7., 8., 16. and 39.
In: Hungarian Code of Laws, volume III., p. 44/288.
Collection of Laws in Force, vol. III., p. 405.

12. Act LXXXIII of 1993 on Certain Separated State Funds

Loc. cit.: Para 28-41. and 58-65.
See also: Decree No. 20/1993 (IV.23.) KTM, (90)
In: Hungarian Code of Laws, volume III/1., p. 44/981.
Collection of Laws in Force, vol. III/2., p. 1150.
Magyar Közlöny (Hungarian Gazette) 1992, vol. 135.

13. Act XLVIII of 1993 on Mining

Loc. cit.: Para 20., 26., 27., 32., 36. and 40.
See also: Government Decree No. 115/1993 (VIII.12), (63)
Government Decree No. 132/1993 (IX.29.), (65)
In: Hungarian Code of Laws, volume III/1., p. 1018.
Collection of Laws in Force, vol. III/2., p. 1318.
Hungarian Gazette, 1993, vol. 61.

57

14. Act LIX of 1993 on the Parliament Granting Citizens' Rights

In: Hungarian Code of Laws, volume III/1., p. 44/1072.
Collection of Laws in Force, vol. III/2., p. 1375.
Hungarian Gazette, 1993, vol. 81.

54

II. Law Decrees

15. Law Decree No. 4. of 1982 on Environmental Protection

Amended: Act IX. of 1990
See also: Decree 8/1982 (III.15.) MT of the Council of Ministers, (46)
In: Hungarian Code of Laws, volume I., p. 362.
Collection of Laws in Force, vol. V., p. 31.

III. Decrees of the Council of Ministers and Government Decrees

16. Government Decree No. 30/1964. (XII.2.) on the Implementation of the Act III of 1964 on Construction Affairs

Loc. cit.: Para 14. and 18-19.
Amended: Decree No. 88/1990. (IV.30.) MT of the Council of Ministers
Government Decree No. 25/1992 (I.28.)
In: Hungarian Code of Laws, volume X., p. 54.
Collection of Laws in Force, vol. VI., p. 58.

17. Government Decree No. 32/1964 (XII.13.) on the Implementation of Act IV of 1964 on Water Affairs

Amended: Government Decree No. 12/1966 (IV.1.)
Government Decree No. 39/1968 (X.30.)
Law Decree No. 31. of 1972
Decree No. 29/1972 (X.4.) MT of the Council of Ministers
Law Decree No. 25. of 1981
Decree No. 10/1984. (II.7.) MT of the Council of Ministers
Act XXIX of 1990
Act XXX of 1990
Act XL of 1990
Act LXIII of 1990
Decree No. 88/1990. (IV.30.) MT of the Council of Ministers
Government Decree 52/1990 (IX.15.)
Government Decree 15/1991 (I.23.)
Government Decree 18/1992 (I.28.)
In: Hungarian Code of Laws, volume X., p. 55.
Collection of Laws in Force, vol. VI., p. 58.

18. Government Decree No. 17/1968 (IV.14.) on Certain Petty Offenses

Loc. cit.: Para 23., 25., 53-56., 71., 92-98., 102-106., 108-111/C., 140-141., 142/A. and 163.

Amended: Decree No. 50/1974 (XI.28.) MT of the Council of Ministers
Decree No. 38/1977 (X.12.) MT of the Council of Ministers
Decree No. 19/1979 (V.11.) MT of the Council of Ministers
Decree No. 8/1992 (III.15.) MT of the Council of Ministers
Decree No. 19/1983 (VI.15.) MT of the Council of Ministers
Decree No. 21/1986 (VI. 2.) MT of the Council of Ministers
Decree No. 6/1986 (III.9.) MT of the Council of Ministers
Decree No. 15/1988 (III.25.) MT of the Council of Ministers
Decree No. 21/1992 (I.28.) MT of the Council of Ministers

In: Hungarian Code of Laws, volume X., p. 67.
Collection of Laws in Force, vol. VI., p. 73.

19. Decree No. 56/1981 (XI.18.) MT of the Council of Ministers on the Control of the Production of Dangerous Waste Materials and Activities Relating to Their Destruction

Amended: Decree No. 55/1987 (X.30.) MT of the Council of Ministers
Government Decree 83/1990 (XI.13.)
Government Decree 27/1992 (I.30.)

See also: Decree No. 6/1983 (III.30.) MÉM, (109)
Decree No. 6/1983 (VIII.25.) IpM, (80)
Decree No. 2/1984 (I.17.) ÉVM, (70)
Decree No. 5/1984 (II.7.) KM, (97)
Decree No. 2/1993 (II.9.) KTM, (89)

In: Hungarian Code of Laws, volume X., p. 349.
Collection of Laws in Force, vol. VI., p. 338.

20. Decree No. 8/1982 (III.15.) MT of the Council of Ministers on the Implementation of the Law Decree No. 4 of 1982 on Environmental Protection

Amended: Decree No. 58/1986 (XII.10.) MT of the Council of Ministers
Decree No. 88/1990 (IV.30.) MT of the Council of Ministers
Government Decree 24/1992 (I.28.)

In: Hungarian Code of Laws, volume X., p. 372.
Collection of Laws in Force, vol. VI., p. 360.

21. Decree No. 21/1986. (VI.2.) MT of the Council of Ministers on the Protection of Air Quality

Amended: Government Decree 49/1989 (VI.5.)
Government Decree 88/1990 (IV.30.)
Government Decree No. 24/1992. (I.28.)
See also: Decree 5/1990 (XII.6.), (113)
Decree 4/1986 (VI.2.) OKTH, (120)
In: Hungarian Code of Laws, volume X., p. 483.
Collection of Laws in Force, vol. VII., p. 32.

22. Decree of the Council of Ministers No. 55/1987 (X.30.) MT regarding the Importation from Abroad of Substances Dangerous to the Human Environment

Amended: Government Decree 83/1990 (XI.13.)
In: Hungarian Code of Laws, volume X., p. 519.
Collection of Laws in Force, vol. VII., p. 64.

23. Government Decree No. 43/1990 (IX.15.) on the Scope of Activities and Authority of the Minister for Environmental Protection and Area Development

Amended: Government Decree 38/1991 (III.1.)
Government Decree 120/1991 (IX.15.)
Government Decree 175/1992 (XII.29.)
In: Hungarian Code of Laws, volume XI., p. 103.
Collection of Laws in Force, vol. VIII., p. 48.

24. Government Decree No. 21/1992 (I.28.) on Scopes of Activities and Authorities of State Administration Belonging to the Scope of the Administration of Internal Affairs

25. Government Decree No. 24/1992. (I.28.) on the Amendment of Certain Environmental and Nature Protection Regulations, and on the Scope of Environmental and Nature Protection Duties and Authorities of the Notary

In: Hungarian Code of Laws, volume XI., p. 278/185.
Collection of Laws in Force, vol. VIII/2., p. 413.
Hungarian Gazette, 1992, vol. 10.

26. Government Decree No. 86/1993 (VI.4.) on the Provisional Ruling on the Examination of the Environmental Effects of Certain Activities

In: Hungarian Code of Laws, volume XI/1., p. 178/588.
Collection of Laws in Force, vol. VIII/2., p. 916.
Hungarian Gazette, 1993, vol. 71.

27. Government Decree No. 115/1993 (VIII.12.) on the Implementation of the Law Decree No. XLVIII of 1993 on Mining

Loc. cit.: Para 4-7., 9-16., 19., 22., 26. and Schedule No.2.
Amended: Government Decree 142/1993 (X.13.)
In: Hungarian Code of Laws, volume XI/1., p. 278/603.
Hungarian Gazette, 1993, vol. 111.

28. Government Decree No. 132/1993 (IX.29.) on the Hungarian Geological Service

In: Hungarian Gazette, 1993, volume 138.

IV. Decrees of Ministers or Secretaries of State

The Decree of the Minister of Health Affairs

29. Joint Decree No. 2/1985. (II.16.) EÜM-ÉVM on the Public Health Regulations of the Storage, Neutralization, and Utilization of Liquid Settlement Waste Materials

Decrees of the Minister of Construction and Town Development

30. Decree No. 1/1968 (I.23.) ÉVM on Permitting Procedures for Land Utilization

Loc. cit.: Para 5-7. and Schedule
Amended: Decree No. 15/1992. (VII.10.) KTM
In: Hungarian Code of Laws, volume XIII., p. 111.
Collection of Laws in Force, vol. XII., p. 212.

31. Decree No. 2/1984 (I.17.) ÉVM on the Sectoral Implementation of the Decree of the Council of Ministers No. 56/1981 (XI.18.) MT on the Control of the Production of Dangerous Waste Materials and Activities Relating to Their Destruction

In: Hungarian Code of Laws, volume XIII., p. 202.
Collection of Laws in Force, vol. XII., p. 296.

32. Decree No. 4/1984 (II.1.) ÉVM on the Provision of Settlement Sanitary Services and on the Neutralization of Liquid Settlement Waste Materials

Amended: Decree No. 8/1992. (V.19.) BM
In: Hungarian Code of Laws, volume XIII., p. 203.
Collection of Laws in Force, vol. XII., p. 297.

33. Joint Decree No. 1/1986 (II.21.) ÉVM-EÜM on Activities Relating to Public Hygiene and Solid Settlement Waste Materials

Amended: Decree of the Council of Ministers No. 55/1987. (X.30.)
Joint Decree No. 4/1988. (VII.22.) ÉVM-SZEM
Act XI. of 1991
Decree No. 8/1992. (V.19.) BM
In: Hungarian Code of Laws, volume XIII., p. 218.
Collection of Laws in Force, vol. IX., p. 166.

34. Decree No. 2/1986. (II.27.) ÉVM on the Publication of the National Construction Rules

Loc. cit.: Para 3.
Schedule: para 5-8., 12., 15., 16., 35., 39., 41., 42., 45., 46., 51., 56., 80., 81., 84., 92., 94., 97., 99. and 122-124.
Amended: Decree No. 1/1990. (I.16.) KÖHÉM
Decree No. 1/1992. (I.16.) KTM
In: Hungarian Code of Laws, volume XIII., p. 220.
Collection of Laws in Force, vol. XII., p. 318.

63

Decrees of the Minister for Environmental Protection and Regional Development

35. **Decree No. 1/1990 (XI.13.) KTM on the High-Supervision and Standard-Supervision Levels of Environmental Protection, Including Standards for Regional Application**

Amended: Decree No. 6/1991. (IV.19.) KTM
Decree No. 18/1992. (X.20.) KTM
In: Hungarian Code of Laws, volume XIII., p. 493.
Collection of Laws in Force, vol. XII., p. 418.

36. **Decree No. 11/1991 (V.16.) KTM on the Determination of the Limit Values of the Emissions Deriving from Destruction of Waste Materials by Burning Technology, and on the Determination of the Rules Relating to the Application of Such Limit Values**

Correction: Hungarian Gazette, 1991, vol. 64.
In: Hungarian Code of Laws, volume XIII., p. 494/24.
Collection of Laws in Force, vol. XII., p. 445.

37. **Decree No. 20/1993 (IV.23.) KTM on the Rules for Managing and Using the Central Environmental Protection Fund**

In: Hungarian Code of Laws, volume XIII., p. 494/67.
Collection of Laws in Force, vol. XiI., p. 496.
Hungarian Gazette, 1993, vol. 48.

38. **Decree No. 3/1988 (VI.10.) KTM on the Regions Under Additional Protection to Preserve Air Quality**

Amended: Decree No. 7/1990 (IV.18.) KÖM
In: Hungarian Code of Laws, volume XIII., p. 450.
Collection of Laws in Force, vol. XII., p. 399.

39. **Decree No. 8/1990 (IV.30.) KTM on the Amendment to Certain Rules of Law Regarding Environmental Protection and Water Affairs**

In: Hungarian Code of Laws, volume XIII., p. 488.
Collection of Laws in Force, vol. XII., p. 418.

Decree of the Minister for Transportation (and Mail) Affairs

40. Decree 5/1984 (II.7.) KM on the Implementation of the Decree of the Council of Ministers No. 56/1981 (XI.18.) MT

In: Hungarian Code of Laws, volume XIV., p. 273.
Collection of Laws in Force, vol. XIII., p. 301.

Decree of the Minister for Transportation, Telecommunications, and Water Affairs

41. Decree 6/1983. (III.30.) MÉM on the Implementation of the Decree of the Council of Ministers No. 56/1981 (XI.18.) MT

Amended: Government Decree No. 19/1992. (I.28.)
In: Hungarian Code of Laws, volume XV., p. 283.
Collection of Laws in Force, vol. X., p. 294.

Decree of the President of the National Environment and Nature Protection Office

42. Decree 4/1986 (VI.2.) OKTH on the Implementation of Decree No. 21/1986 (VI.2.) MT of the Council of Ministers on the Protection of Air Quality

Amended: Decree No. 8/1989. (VIII.24.) KVM
Decree No. 9/1990. (IV.30.) KVM
In: Hungarian Code of Laws, volume XIII., p. 403.
Collection of Laws in Force, vol. XII., p. 381.

V. Other Regulations

43. Resolution No. 25/1994 (V.10.) AB of the Constitutional Court

44. Resolutions No. 39-43/1994 (VI.30.) AB of the Constitutional Court

45. Statement 9017/1991 (SK.8.) KSH of the President of the Central Office of Statistics on the Standard Sectoral Classification System of Economic Activities

46. Statement 9025/1991. (SK.12.) KSH on the Register of Services

65

APPENDIX B

Sample Landfill Operating Rules

Sample Landfill Operating Rules

GENERAL: All persons using the landfill must abide by the following rules.

HOURS OF OPERATION: [whatever the hours are]

ACCEPTABLE WASTE: All refuse, brush, demolition material, tires, earth, or other similar wastes. Specific industrial process wastes, including sludge or other semi-solid waste, will be accepted only after prior approval of the operator.

UNACCEPTABLE WASTES: Waste oils, sewage and septage pumpings, or hazardous waste and other wastes determined by the operator to be a danger to public health or the environment.

SPECIAL WASTES: Special wastes such as tires, brush, demolition waste, construction waste, semi-solid process wastes, and ashes shall be dumped in special areas or as directed by the gate attendant.

INSPECTION OF WASTE: All drivers of waste vehicles must stop at the entrance gate for waste inspection and determination of waste type and origin. The gate attendant will direct the driver to the weighbridge [if installed] or special waste disposal area.

RECEIPT AND WEIGHING OF WASTE [if the site has a weighbridge]: All waste trucks, directed to the weighbridge, will be weighed in and out by the [weighmaster or gate attendant]. If the vehicle tare weight has been obtained during a previous trip, the weighmaster or gate attendant will inform the driver that the vehicle does not have to be weighed out as it leaves the landfill. After weighing in, the weighmaster or gate attendant will direct the driver to the appropriate disposal location.

TRAFFIC AND UNLOADING: All drivers shall obey traffic signs (and traffic controllers if employed) and dump waste only in designated areas as directed by the traffic controllers. After dumping the load, the driver shall immediately leave the disposal area and return to the weighbridge for weighing out, or exit the landfill.

SCAVENGING: Scavenging of any waste for food or other materials is strictly prohibited. Any person observed scavenging will be removed from the site by the operator.

BURNING: Burning of any refuse is strictly prohibited in all areas.