PN-ACC-144

96712

# Environmental Policy and Technology Project

Contract No. CCN-0003-Q-00-3165

**UZBEKISTAN**

# FIELD REPORT

***Proposed Chlorination System Improvements at Water Treatment Plants: Nukus and Urgench, Uzbekistan***

**February 1995**
**Delivery Order 06, Task 1**

Prepared for:
Central Asia Mission
**U.S. Agency for International Development**

Prepared by:
Central Asia Regional EPT Office in Almaty, Kazakhstan
Environmental Policy and Technology Project
For the New Independent States of the former Soviet Union
A USAID Project Consortium Led by CH2M HILL

# PROPOSED CHLORINATION SYSTEM IMPROVEMENTS AT WATER TREATMENT PLANTS: Nukus and Urgench, Uzbekistan

## BACKGROUND

This project is a part of the program as defined in the Memorandum of Understanding executed between the Government of the United States and the Government of Uzbekistan on 20 April 1994 to "promote improved environmental health" in the environmental disaster areas around the Aral Sea.

Environmental Policy and Technology (EPT) field investigations completed in June 1994 defined several improvements at the Nukus and Urgench water treatment plants that if implemented could help improve potable water quality being delivered to these cities. Specific recommendations included: a) the Government of Uzbekistan adopts international standards for drinking water quality, (b) install new chlorination equipment to replace existing chlorination equipment, (c) provide new laboratory equipment to replace antiquated equipment, and (d) improve operation and maintenance of other unit processes including the clarifiers and filters. Follow up studies on risk assessment of pesticides in the raw water and downstream (transmission and distribution system) chlorination were also recommended.

Review of the EPT Field report (Interim Field Investigations in Uzbekistan: Nukus and Urgench Water Treatment Plants, September 1994) supported proceeding with the design, procurement, delivery, and installation of the proposed laboratory and chlorination equipment. This report summarizes the conceptual design and proposed equipment procurements for upgrades to the chlorination systems at the two plants.

## CONCEPTUAL DESIGN

Chlorination systems at both plants are identical therefore, the following conceptual design is applicable to both the Nukus and Urgench plants. The conceptual design meets current United States Environmental Protecting Agency (USEPA) and Chlorine Institute standards. The rated capacity of each plant is 200,000 m3/day (52.8 mgd.) The existing chlorination system is housed in the chlorination building which consists of a storage room, an evaporator room and a second story chlorination room located above the evaporator room.

Within the storage room are located on overhead monorail crane and, one 800 kg (1,760lb) tank. Chlorine is withdrawn from the liquid form under pressure and piped via an evaporator located in an adjacent first story room. Chlorine gas is then routed to the chlorinators located in a second story room directly above the evaporator room. The evaporator (cylinder) itself is located in the floor of that room and is not being utilized

for liquid feed. There are no other facilities in the evaporator room making it available in which to install new chlorinators.

Within the chlorinator room, there are eight vacuum operated four chlorinators. Five of the clorinators are dedicated to primary disinfection (prechlorination) and three dedicated to final desinfection (post chlorination). Only four of the eight chlorinators were functional at the time of the field inspection. All equipment is antiquated and in poor state of repair.

The proposed conceptual design to upgrade the chlorination systems is based on replacing most of the components including chlorinators, ejectors, piping, valves, diffusers and related equipment. As part of the upgrading, alarms, controls, and safety equipment will be included. New equipment will be installed in the existing storage room and in the evaporator room. No equipment is proposed to be located in the existing chlorinator room. New chlorinators can be located in the evaporator room because of space availability and it is also more convient being located on the first floor. The existing evaporator would not be used. The new system would be based on gas feed rather than the original design of liquid feed.

Other than the room themselves, the only equipment that would continue to be used would be the storage room monorail crane. It is assumed the chlorine supply would continue to be from 800 kg cylinders and that the cylinders would be supplied by local authorities.

Table 1 summarizes conceptual design criteria and proposed equipment. It is assumed that a chlorine dosage of 5.0 mg/l will be sufficient to provide a residual in the finished water from the plant(s) in the range of 0.2 to 1.0 mg/l. Based on this dosage, the maximum feed rate will be 900 kg/day (2,000 lb/day). Designing for cold weather operation (0 degrees centigrade) only 180 kg/day (400 lb/day) of chlorine gas can be extracted per cylinder. It will therefore take five cylinders operating simultaneous to meet the 900 kg/day dosage requirement.

Figure 1 is a schematic process overview. Chlorine will be diffused to two locations within each of the two trains of each plant. Prechlorination will be at the secondary clarifiers and post chlorination process will be at the service pumps. Two ejectors and four diffusers will therefore be required at each plant.

The conceptual design is based on two banks of five cylinders with one bank operating and the other bank in standby as shown in Figure 1. One vacuum regulator will be provided for each bank of cylinders thereby equalizing gas withdrawal for all cylinders in that bank. The cylinder banks will be connected with an switchover module will automatically switch chlorine feed to the standby cylinder bank upon low pressure (empty) in the active bank. The now empty cylinder bank will then be replaced with full cylinders.

Figure 2 and Figure 3 are schematic layouts of the storage room and chlorinator room. The conceptual design is based on three 900 kg/day (2,000 lb/day) chlori-nators. One chlorinator would be dedicated to pretreatment. A second chlorinator would be dedicated to post treatment and the third chlorinator would be a standby unit. New PVC piping will be installed from the chlorinator room to the diffusion points as shown schematically in Figure 1.

Safety equipment provided will include vent fans in the storage room operatin at 70 m3/min (2,500 cfm) and chlorinator room operating at 42 m3/min (1,500 cfm). Rooms will operate under positive pressure with the fans discharging (blowing) into the rooms with exhaust (venting) through louvers installed in the walls. Opening will have to be made in the walls to accommodate the fans and louvers. All tools necessary to accomplish the installations will be provided as part of the procurement and dedicated to the plants upon completion of the work.

Other safety equipment provided will include gas detectors with audible (horn) and visual (light) alarms mounted on the exterior of the two rooms, an emergency shower installed on the exterior of the building, and SCBA w/air packs.

## INSTALLATION PROCEDURES

Installation will be accomplished by an EPT operations specialist and a fabricator (vendor) installation specialist. It is assumed that plant staff will help the team as needed including trenching and moving of equipment on site. It is estimated that installation at each plant should take approximately two weeks to accomplish. Installation will include training the local staff in the proper use and operation of the equipment including safety equipment. Operation manuals will instructions on dosage requirements, proper operation and maintenance of equipment, safety procedures, and records management will be provided in Russian.

The proposed project schedule is as follows:

* Conceptual design completed - January
* Advertise Equipment for bids - February
* Contract awarded to lowest responsive bidder - March
* Assembly of equipment completed - April
* Equipment departs US by surface shipping - May
* Equipment arrives in Uzbekistan - June
* On- site services completed at Nukus - July
* On- site services completed at Urgench - August 1995

NUKUS AND URGENCH
PROPOSED CHLORINATION SYSTEM UPGRADES

Table 1

| ITEM | Nukus WTP | URGENCH WTP |
|---|---|---|
| Flow, mgd<br>(l/sec) | 50<br>(2220) | 50<br>(2220) |
| Chorine Dosage, mg/l | 5.0 | 5.0 |
| Chlorine Feed Rate, lbs/day<br>(kg/day) | 2,000<br>(900) | 2,000<br>(900) |
| Chlorine Cylinders (800 kg) | 10 | 10 |
| Vacuum Reg., lbs/day<br>(kg/day) | 2@2,000<br>(2@900) | 2@2,000<br>(2@900) |
| Vacuum Gauge (0-30 in.) | 3 | 3 |
| Drip Leg w/heat strip | 1 | 1 |
| Manifold w/filter | 2 w/5 cyl. | 2 w/5 cyl. |
| Low Pressure Switch w/alarm | 2 | 2 |
| Automatic Switchover Module | 1 | 1 |
| Chlorinator, lbs/day<br>(kg/day) | 3@2,000<br>(3@900) | 3@2,000<br>(3@900) |
| Ejector 2,000 lbs/day | 2 | 2 |
| Pressure Gauge (0-120 psi) | 4 | 4 |
| PVC 2-inch, Sch 80 Vacuum Pipe | 10,000 ft. for2 lines | 10,000 ft. for2 lines |
| Vent Fan/Louvers, cfm | 1@2,500<br>1@1,500 | 1@2,500<br>1@1,500 |
| Emergency Shower | 1 | 1 |
| SCBA -Air Pack | 4 | 4 |
| Service Water Line PVC Sch 80<br>(75 psi-75 or 50 psi-120 gpm) | 1000ft. | 1000ft. |
| Diffuser | 4(2 per feed point) | 4(2 per feed point) |
| Gas Detectors w/sensors & alarms | 1w/4 sensors<br>1w/single sensor | 1w/4 sensors<br>1w/single sensor |

Note: Total equipment to include 2 years supply of spare parts and tools.

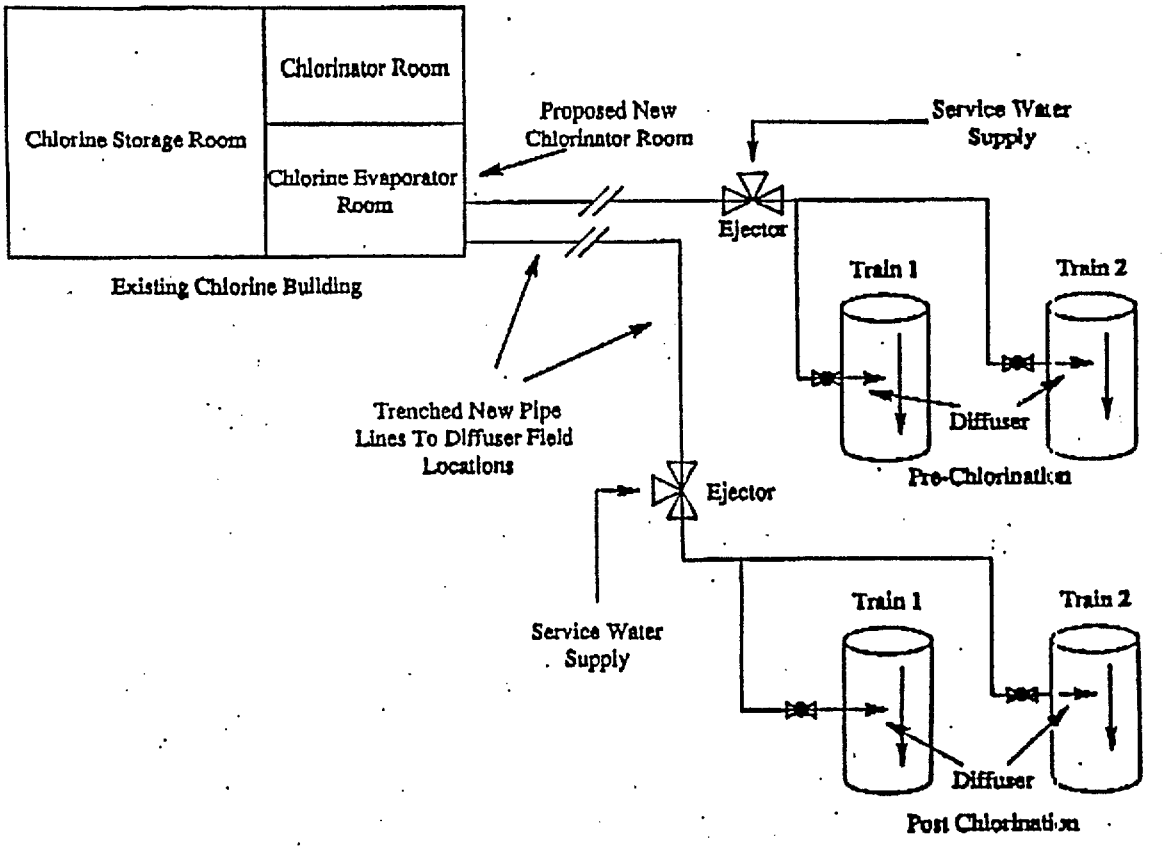


FIGURE 1

PROCESS OVERVIEW
Proposed Chlorination System Improvements
Nukus and Urgench, Uzbekistan

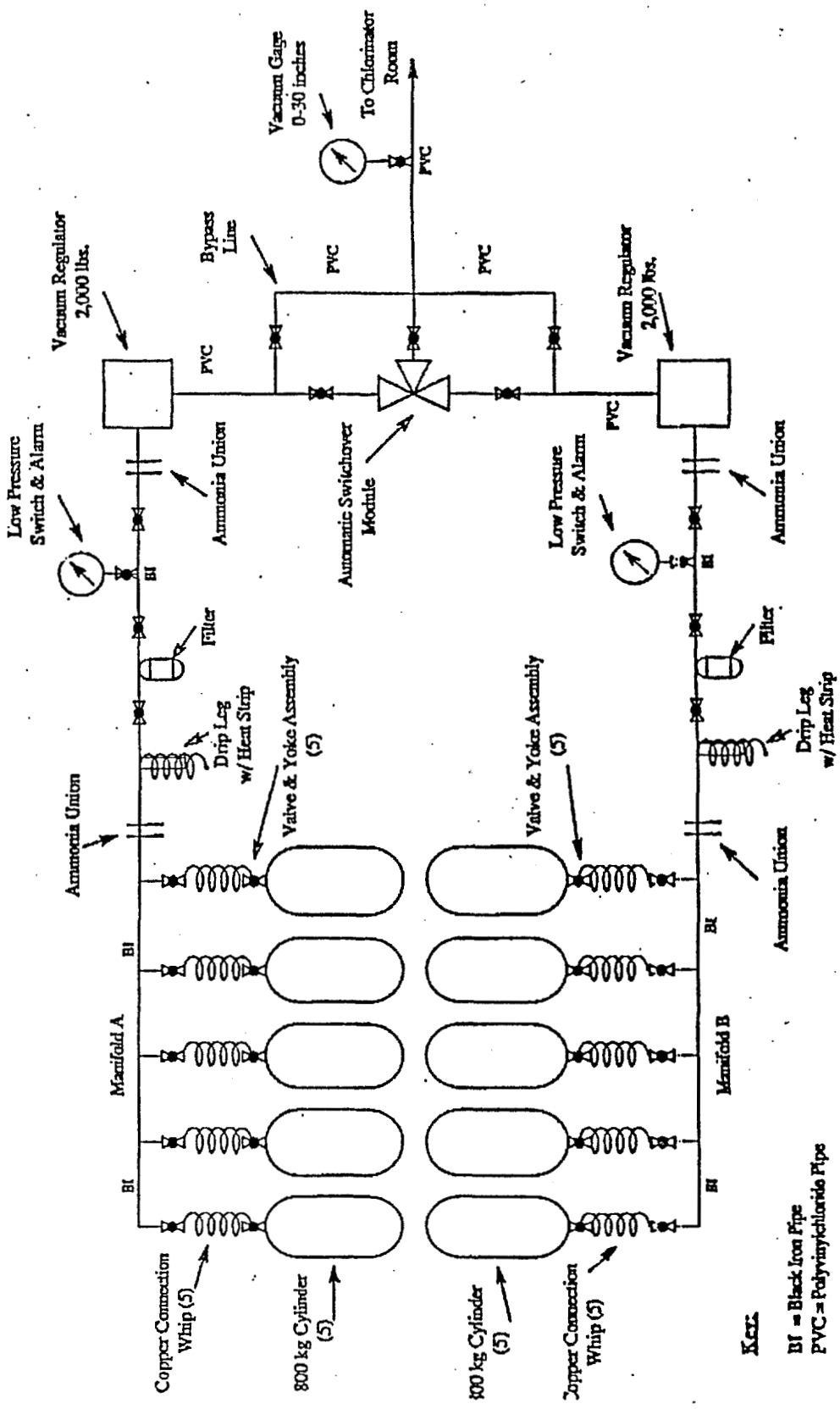


FIGURE 2

STORAGE ROOM LAYOUT
Proposed Chlorination System Improvements

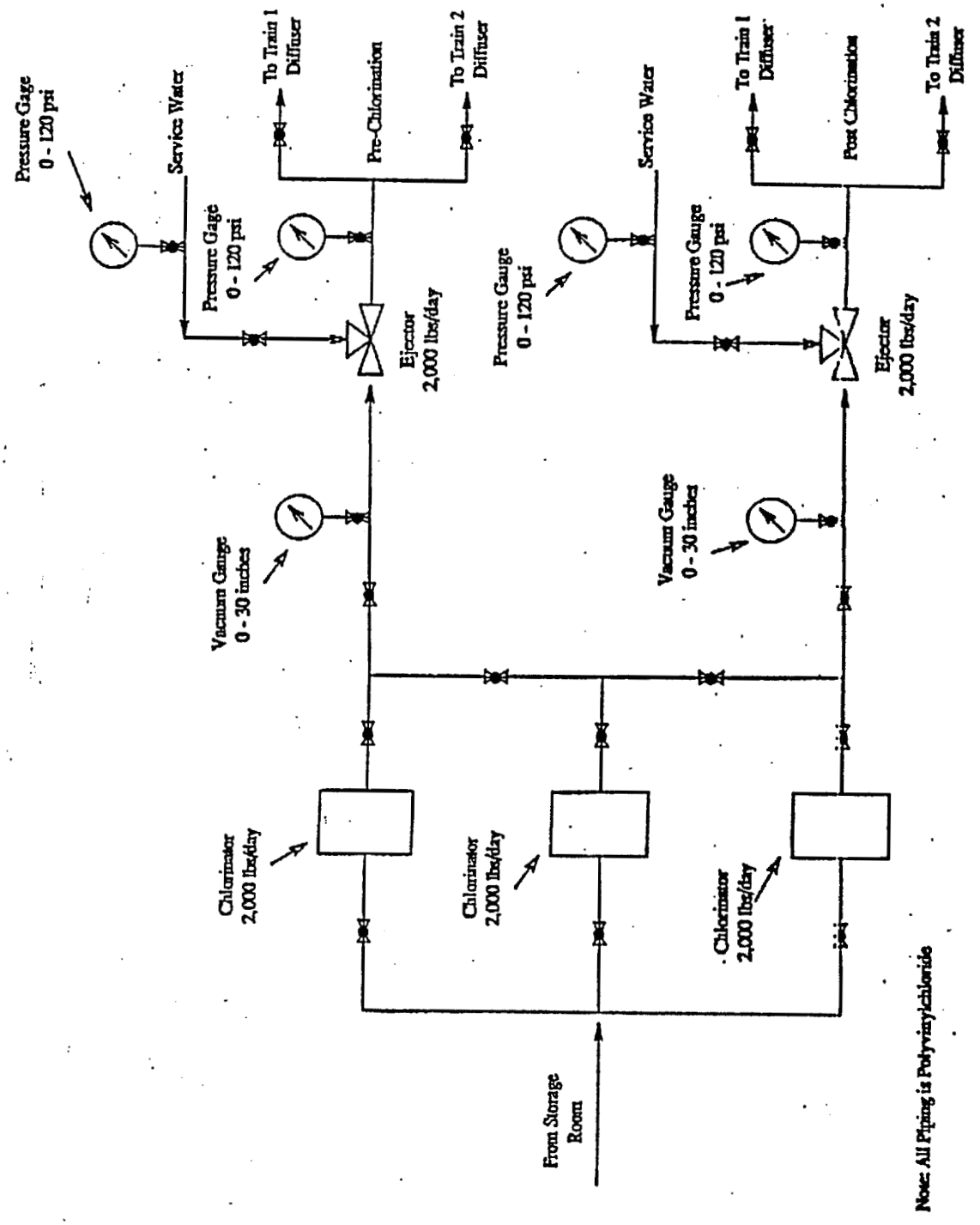


FIGURE 3
CHLORINATOR ROOM LAYOUT
Proposed Chlorination System Improvements
Nukus and Urgench, Uzbekistan

# New Independent States (NIS)

★ **EPT Regional Offices**

**The Environmental Policy and Technology (EPT) Project:** Environmental degradation and natural resource mismanagement threaten public health, biodiversity and economic vitality in the New Independent States (NIS). To assist the NIS in alleviating these problems, the U.S. Agency for International Development (USAID) began the EPT Project in 1993. EPT provides technical assistance and policy advice in the environmental sector and promotes environmentally sound economic development through public and private, U.S. and NIS partnerships. The EPT Project is managed by USAID with support from the U.S. Environmental Protection Agency (USEPA). For assistance in project design, management and implementation, USAID has agreements with CH2M HILL International, Harvard Institute for International Development and ISAR. As the primary EPT contractor, CH2M HILL International has the lead role in delivering technical assistance, logistical support and policy support for selected projects. EPT Regional Offices are located in: Washington, D.C.; Moscow, Russia; Kiev, Ukraine; and Almaty, Kazakhstan.

**CH2M HILL International Consortium of Subcontractors:** Center for International Environmental Law; Clark Atlanta University/Historically Black Colleges, Universities and Minority Institutions Technology Consortium; Consortium for International Development; Ecojuris; Environmental Compliance Inc.; Harvard Institute for International Development; Hughes Technical Services Company; International Programs Consortium; International Resources Group; Interfax; K&M Engineering; Ogden Environmental and Energy Services; Price Waterhouse; the World Wildlife Fund; and numerous local subcontractors and cooperators throughout the NIS.

**Environmental Policy and Technology Project**
A USAID Project Consortium led by CH2M HILL

CH2M HILL International Services, Inc.
P.O. Box 24548, Denver, Colorado 80224 U.S.A.