PN-ACC-017

76423

LEAST COST INVESTMENT PLAN KRASNODAR POWER GENERATION PROJECT

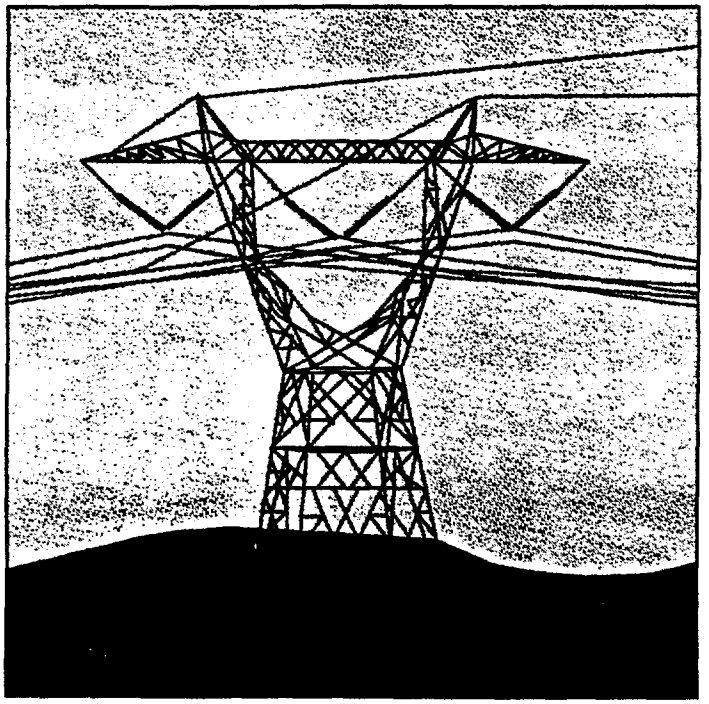

Prepared by: Hagler Bailly Consulting, Inc.
ICF Resources, Inc.

Submitted by: Burns and Roe Enterprises, Inc.
Project Manager

Submitted to: Krasnodar Project Ownership Group:
RAO EES Rossii
Kubanenergo
RAO Gasprom
Krasnodar Krai Administration
US. Agency for International Development
The World Bank

Contract No: CCN-0002-Q-00-3154-00
Energy Efficiency and Market Reform Project
Delivery Order No. 1
Krasnodar, Task 1

December 1995

CONTENTS

DEFINITION OF TERMS iii

CHAPTER 1
EXECUTIVE SUMMARY
1.1 PROJECT JUSTIFICATION 1.1
1.2 LEAST COST PLAN 1.2
1.3 SUMMARY OF RESULTS 1.2

CHAPTER 2
CURRENT ELECTRIC SUPPLY SITUATION
2.1 ELECTRICITY SUPPLY 2.1
2.2 ELECTRICITY DEMAND 2.4
2.3 HEAT DEMAND 2.5
2.4 INTERREGIONAL TRANSMISSION CAPACITY 2.6
2.5 NEED FOR ELECTRIC GENERATING 2.6

CHAPTER 3
OPTIONS FOR HEAT AND POWER SUPPLY
3.1 CANDIDATE PROJECTS FOR THE KRASNODAR KRAI 3.1
3.1.1 MOSTOVSKOY PROJECT 3.2
3.1.2 KRASNODAR PROJECT 3.4
3.1.3 NOVOROSSIYSK PROJECT 3.5

3.2 CANDIDATE PROJECT CAPITAL AND OPERATING COSTS 3.6
3.2.1 POWER PLANT CAPITAL COSTS 3.6
3.2.2 POWER PLANT OPERATING AND MAINTENANCE COSTS 3.6
3.2.3 COSTS OF SETTLEMENT AT MOSTOVSKOY AND NOVOROSSIYSK (SOCIAL COSTS) 3.8
3.2.4 GAS PIPELINE AND TRANSMISSION LINE COSTS 3.11

3.3 GENERIC POWER PROJECTS FOR NORTH CAUCASUS 3.14
3.4 INTERREGIONAL TRANSMISSION PROJECTS 3.14
3.4.1 MIDDLE VOLGA - CENTER - NORTH CAUCASUS PROJECT 3.14

3.4.2 VOLGOGRAD-NORTH CAUCASUS AND SOUTHERN CENTER-NORTH CAUCASUS PROJECTS . . . 3.16

3.5 COMPARISON OF GENERATION PROJECT SITES 3.16

CHAPTER 4
METHODOLOGY
4.1 OVERVIEW OF THE LEAST-COST INVESTMENT PLAN 4.1
4.2 THE PLANNING MODELS 4.2
4.2.1 SCREENING MODEL 4.2
4.2.2 LINEAR PROGRAM MODEL 4.3
4.2.3 POWER RELIABILITY ASSESSMENT MODEL 4.4
4.2.4 BASE CASE & CHANGES CASES 4.5

4.3 SUMMARY OF DATA AND ASSUMPTIONS 4.6
4.3.1 REGIONS 4.6
4.3.2 GENERATION CAPACITY 4.6
4.3.3 TRANSMISSION 4.6
4.3.4 FINANCIAL AND ECONOMIC ASSUMPTIONS 4.7

4.4 DEMAND PROJECTIONS 4.10

CHAPTER 5
RESULTS
5.1 SCREENING ANALYSIS - COMPARISON OF MERITS OF SITES 5.1
5.2 RESULTS OF THE IMP© ANALYSIS 5.5
5.3 SELECTION OF PREFERRED SITES IN KRASNODAR KRAI 5.8
5.4 POWER RELIABILITY ASSESSMENT MODEL RESULTS 5.10
5.5 QUALIFICATIONS REGARDING ASSUMPTIONS 5.14

APPENDICES

APPENDIX A - LIST OF PLANTS AND RETIREMENT SCHEDULE
APPENDIX B - TRANSMISSION DIAGRAMS AND MAPS
APPENDIX C - ELECTRICITY AND HEAT DEMAND PROJECTIONS
APPENDIX D - STATIC SCREENING OF GENERATION OPTIONS
APPENDIX E - RESULTS OF INTEGRATED PLANNING AND POWER RELIABILITY ASSESSMENT MODELS

DEFINITION OF TERMS USED IN THIS REPORT

CURRENCY:

Dollars are U.S. Dollars as of Jan. 1 1995.
Current day Ruble costs have been converted at 4550 Rubles per U.S. Dollar.

UNITS OF MEASURE:

1 BTU (British Thermal Unit) . . . . . .
= 1055 Joules
1 Joule . . . . . .
= 0.239 Calories
1 Standard Cubic Meter of Natural Gas . . . . . .
= 38.0 Kilojoules
1 Ton . . . . . .
= 1000 Kilograms
1 Ton of Crude Oil . . . . . .
= 41.8 Gigajoules

TERMS:

Capacity Factor (%) equals the yearly number of equivalent full load hours of operation divided by 8760 hours per year.

Heat Rate (BTU/kWh) equals quantity of heat required to produce one kilowatt of electricity, or an equivalent amount district heat.

CHAPTER 1
EXECUTIVE SUMMARY

The Krasnodar Krai region of southern Russia, which is part of the North Caucasus Unified Power System (UPS), has been experiencing electricity shortages and disruptions for the past few years. A group of Russian companies composed of Kubanenergo, RAO EES Rossii, Gasprom and others (Project Owners) is planning the Krasnodar Power Generation Project. This project will involve the construction of a 1350 MW combined-cycle power station at Mostovskoy. The project owners have requested the World Bank to provide funding for the project. The purpose of this study task (Task 1) is to verify that the proposed project is required to meet the energy demands of the region. Detailed business plans and technical and environmental feasibility studies are also underway for appraisal by the World Bank.

1.1 PROJECT JUSTIFICATION

The North Caucasus UPS has an acute electricity generation capacity deficit that is affecting the quality of supply. The system has a combined installed capacity of 10,557 MW, including 2,180 MW of hydro and 8,377 MW of fossil capacity. A considerable portion of this installed capacity has been de-rated due to age and deteriation in the quality of available fuel. Also, because some of the units within the region burn agricultural wastes, they are only available on a seasonal basis. This has resulted in effective available thermal capacity of 6597 MW. The maximum effective capacity (wet season) of the hydro units in North Caucasus is 1969 MW, as some of these units have also been derated. Due to seasonal effects not all of the installed hydro capacity in the region is available for meeting peak loads during the winter months; the available hydro capacity during the winter months is 1790 MW. This results in an effective system capacity of 8387 MW during winter, which is the period of the year when the annual peak load occurs.

In the past, the North Caucasus region received substantial quantities of power from Russia's Center UPS (through Ukraine) and additional power directly from generating plants within Ukraine. This interconnection became unreliable, and it is now no longer in operation. While a recent drop in consumption has provided some respite, the projected power deficit is expected to reach approximately 2,000 MW by 2000 unless new generating and transmission capacity is added to the system. This projection is baseed on the assumption that most of the aging existing capacity can be kept in operation for six or seven years.

The region with the greatest power deficit within the North Caucasus is the Krasnodar Krai, which relies on imports from neighboring Energos for 60% of its electricity consumption. Because the local utility, Kubanenergo, has equipment that is in general 20 to 40 years old, the deficit will deepen further as the aging units become less reliable and must ultimately be retired. To address this deficit, Kubanenergo is planning to install up to 800 MW of combined cycle capacity at Krasnodar, a 300 MW combined cycle plant at Novorossiysk, and another 1,350 MW combined cycle plant at Mostovskoy.

1.2 LEAST-COST PLAN

The purpose of Task 1 is to evaluate the proposed projects as potential elements of a least-cost investment program to address the electricity needs of the North Caucasus UPS, with emphasis on the Krasnodar Krai. The task involved a detailed assessment of the needs for electricity and district heating in the Krasnodar Krai, and an evaluation of the supply options available within the North Caucasus UPS and from neighboring power grids in Russia and Ukraine to determine the most economical plan to alleviate the North Caucasus' power shortage.

1.3 SUMMARY OF RESULTS

The North Caucasus is in need of substantial generation capacity additions in the immediate future. At this time, there is a program of Hydroelectric plant additions, totaling 160 MW, that is scheduled to bring capacity on line gradually between 1996 and 2000. In addition, a 500 kV transmission link with the Center UPS is scheduled to be completed in 1997. This will provide an additional 550 MW of firm capacity to the region. There is also a current program to replace 159 MW of aging boiler equipment and 190 MW of combustion turbines at the Krasnodar TETS site with a 400 MW CHP/Combined cycle plant. Even with these additions there is a pressing need for building new gas fired power plants.

This study has found that thermal generating capacity must be added in the North Caucasus as quickly as possible. The earliest date that new plants could be brought on line is 1998. At that time the capacity needed to maintain reliable a power supply will be 940 MW. The study has also determined the need for about 268 MW additional capacity in 1999, and for approximately 405 MW of capacity in 2000. It is therefore prudent that the proposed plan to build up to 1350 MW of combined-cycle capacity at Mostovskoy proceed on an accelerated schedule. This will be necessary to maintain a system reserve margin of 14 percent, which is the minimum for assuring reliable system operations. These additions would add a total of 1750 MW in gas fired capacity to the North Caucasus UPS during the next five years. Figure 1- 1 illustrates the need to add capacity in the region as demand grows and retirements reduce the capacity available from existing units. The data used in preparing Figure 1 -1 is presented in Table 1 - 1.

Because new and replacement capacity cannot be commissioned prior to 1998, a potential capacity shortage, ranging from 689 to1103 MW, will exist in the region through 1997. To eliminate the shortage, it will be necessary to extend the life of some of the units that have been scheduled to be retired through 1998. This is necessary because there is no practical possibility for adding new generating capacity before that year.

Regarding the location of the new capacity, Krasnodar Krai is the most appropriate area in the North Caucasus for substantial capacity additions because over 600 MW of existing capacity is scheduled to retire before the end of 2003, and the region is already heavily dependent on other regions for power. The current situation impairs the reliability of electricity service and results in excessive transmission losses. Of the three potential sites in the area, only the Mostovskoy site is available for the addition of new capacity in 1998 and, it is initially limited to the addition of simple cycle gas turbines due to construction lead time. The other two sites are expected to require an additional year or two of lead time because of the need for environmental studies to verify that they would be appropriate for building new power plants.

The Mostovskoy site offers a number of advantages, including its availability for early development. The site's only drawback is that it is not located near the major load centers in the region. The Krasnodar and Novorossiysk sites are located at major load centers, and they offer the potential for improved economic efficiency as Combined Heat and Power Plants (CHP). However, only the replacement of the older CHP units at Krasnodar TETS offers a lower cost alternative to the Mostovskoy project. Given that work is already proceeding for those replacements, the next project for the North Caucauses should be done at Mostovskoy. Recognizing the advantages of having plants located near load centers, it is likely that some smaller plant additions after 2000 will be attractive at Novorossiysk, subject to further investigation of the advantages of that site.

The following list gives a ranking of Combined Cycle options starting with the lowest cost alternative. The cost of electric power production includes the cost of new transmission facilities and gas pipelines as required for each site. Rankings have also been done for simple cycle plants; these appear in Chapter 5. (Production costs below are at 80% capacity factor):

Site	Capacity	Production Cost, $/kWh
Krasnodar CC/CHP (replacement)	400 MW	.0236
Mostovskoy CC	900 MW	.0318
Novorossiysk CC/CHP	400 MW	.0320
Novorossiysk CC	450 MW	.0320
Krasnodar CC	450 MW	.0333
Mostovskoy CC	450 MW	.0339

Considering all of the above factors the following is considered to be the best approach to meeting needs for immediate capacity additions while keeping the long term costs to a minimum:

1. Krasnodar - continue with the replacement of the two existing 95 MW simple cycle units in 1997 and 1999, with conversion to 400 MW of combined cycle in 1999.

2. Mostovskoy - construct 600 MW Simple cycle addition for 1998-99 operation, with conversion to combined cycle operation in 1999 or 2000 to bring the capacity at that site to 900 MW. Allow for the possibility to add another 450 MW of combined-cycle as early as 2000 depending on the rate of demand growth during the next few years.

3. Novorossiysk - provide 300 to 600 MW simple cycle for operation in 2001, with partial conversion to combined cycle if and when CHP operation is shown to economical or if additional base load capacity is needed.

ESTIMATION OF REQUIRED CAPACITY NEEDS FOR NORTH CAUCASUS

Year	Existing* Capacity MW	Peak Demand MW	Required Capacity MW	-- Committed Additions -- Hydro MW	Trans. MW	Fossil MW	Other Required Additions MW	Total Capacity Additions MW
1994	8387	8616**						
1995	8068	8220	9371	0	200	0	0	200
1996	8068	8180	9325	40	0	0	0	40
1997	7993	8475	9662	40	550	150	0	740
1998	7955	8697	9915	40	0	0	940	980
1999	7955	8967	10222	40	0	250	18	308
2000	7829	9212	10502	0	0	0	405	405
2001	7784	9471	10797	85	0	0	255	340
2002	7780	9753	11118	85	0	0	240	325
2003	7485	10018	11421	85	0	0	512	597
2004	7080	10293	11734	85	0	0	634	719
2005	6953	10588	12070	0	0	0	463	463

* Effective capacity available for meeting winter peak.
** Includes an estimated 110 MW of unserved demand.

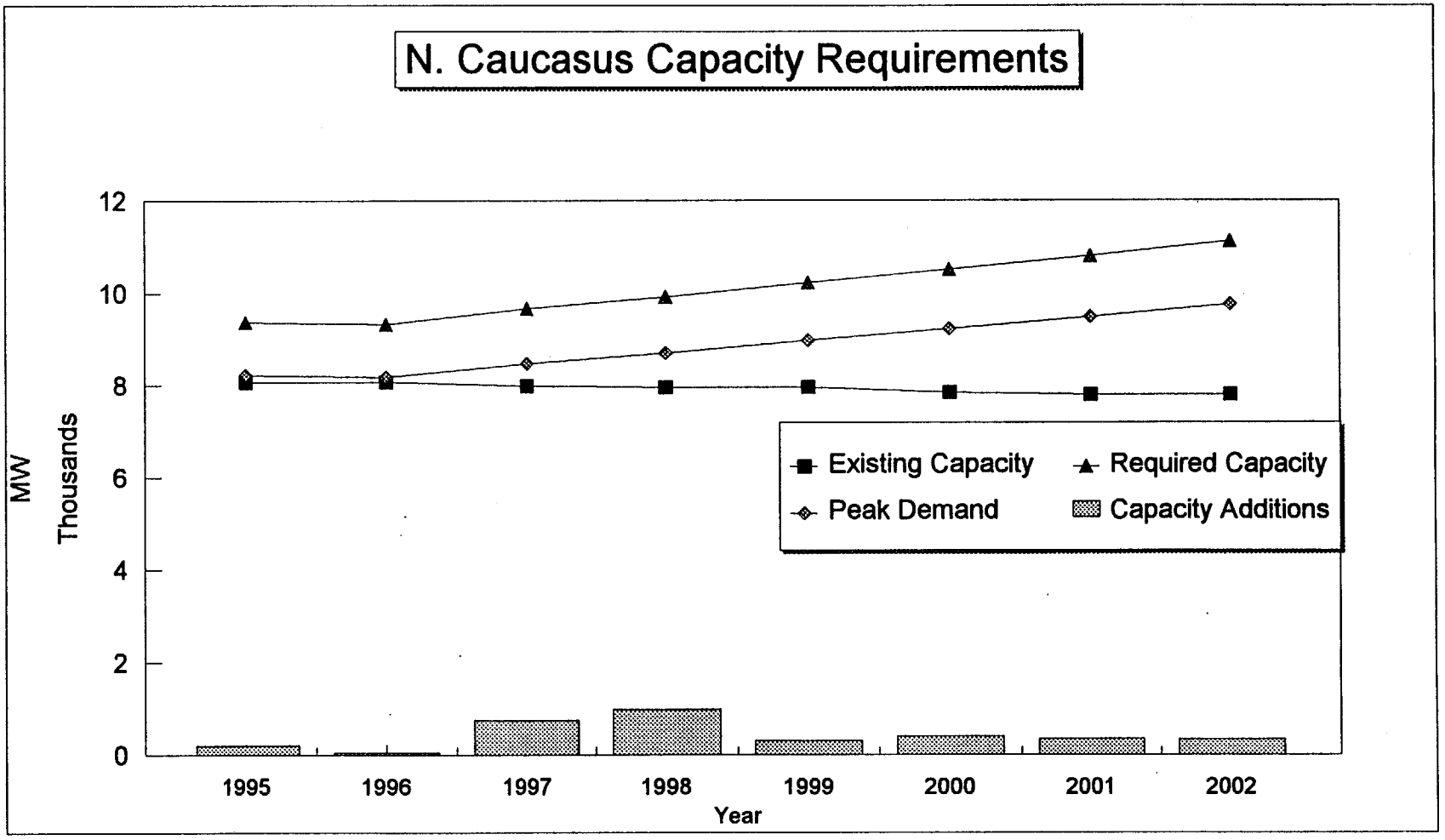
N. Caucasus Capacity Requirements
MW
Thousands
12
10
8
6
4
2
0
1995
1996
1997
1998
1999
2000
2001
2002
Year
Existing Capacity
Required Capacity
Peak Demand
Capacity Additions

6

CHAPTER 2
CURRENT ELECTRIC SUPPLY SITUATION

The North Caucasus UPS is one of seven major regional power grids or Unified Power Systems within Russia. It is currently connected with the Center UPS, which in turn is connected with the other UPS grids. The North Caucasus UPS is also connected to the grids to the south in adjacent countries that were previously members of the USSR. In addition, there is a connection to the Ukrainian power grid, but this connection is currently not operational.

In the past for economic and policy reasons, the North Caucasus relied on regions to the north and east for much of its power supply. The North Caucasus is not well endowed with the natural resources used for power generation, and substantial amounts of inexpensive energy were available from large nuclear, fossil and hydroelectric generating stations in those regions. The bulk of the power imported into the region flowed through what is now Ukraine. Following the dissolution of the USSR, political and technical problems have developed that have caused the supply of power from Ukraine to become unreliable. This has resulted in the current power shortage problem in the North Caucasus.

2.1 ELECTRICITY SUPPLY

The North Caucasus's installed capacity was 10,557 MW at the end of 1994. This included 2,180 MW at the region's 88 hydroelectric generating units and 8,377 MW from its 73 fossil units. A considerable portion of this installed capacity has been de-rated due to age and deteriation in the quality of available fuel. Also, because some of the units within the region burn agricultural wastes, they are only available on a seasonal basis. This has resulted in effective available thermal capacity of 6597 MW. The maximum effective capacity (wet season) of the hydro units in North Caucasus is 1969 MW, as some of these units have also been derated. Due to seasonal effects not all of the installed hydro capacity in the region is available for meeting peak loads during the winter months; the available hydro capacity during the winter months is 1790 MW. This results in an effective system capacity of 8387 MW during winter, which is the period of the year when the annual peak load occurs.

Last year fossil fueled power production accounted for 82% of all electricity produced within the region, hydroelectric power accounted for 10%, and the balance was provided from imports. There is no nuclear generation capacity in the region.

At one time nuclear power was planned for the North Caucasus. Work was begun on two plants, one at a site near Rostov-on-Don and another at Mostovskoy in Krasnodar Krai. The work on the Rostov Plant site has proceeded, and the plant is now within 70 to 95% of completion (estimates of its status vary). Work at the Rostov site is currently suspended, however, while Minatom pursues approvals and funds to put the plant into operation. The Mostovskoy Nuclear Project was converted to a fossil plant shortly after the site was acquired due to public pressure. Work at the site is now on hold pending the approval of funding. This is the site of the Mostovskoy projects reviewed in this study.

The region has and continues to be a net importer of power from other regions. Imports totaled 5,061 million kWh or 9% of total consumption in 1993, and 3,991 million kWh or 8% of total consumption in 1994. Historical data on generation capacity and power production for the North Caucasus region are shown in Table 2-1.

Table 2-1
North Caucasus Capacity and Generation

Generation Source	Generation Mill.kWh		Installed Capacity (MW)		Average Capacity Factor (percent)	
	1993	1994	1993	1994	1993	1994
Hydroelectric	6,872	5,065	2,180	2,180	36.0	26.5
Conventional Thermal	34,181	31,640	6,090	6,090	64.1	59.3
Combined Heat and Power	9,621	8,820	1,977	1,977	55.5	50.9
Imported Power	5,061	3,991				
Total	55,735	49,516	10,247	10,247	56.7	51.0

The region includes nine Energos or electric utility companies; all but one, Kalmenergo, generate power. Their capacities and 1993 generating levels are shown in Table 2-2.

8

Table 2-2
1993 Capacity and Generation by Energo

Utility	Total Capacity MW	Fossil Capacity MW	Hydro Capacity MW	1993 Production Mill. kWh
Kubanenergo	924	838	86	5,648
Stavropolenergo	4,215	3,750	465	22,502
Dagenergo	1,339	20	1,319	3,972
Grozenergo	489	489	0	2,016
Rostovenergo	3,174	2,970	204	16,077
Three others	106	0	106	477
Total	10,247	8,067	2,180	50,647

RETIREMENT PROGRAM

Approximately 4400 MW of thermal plant capacity are scheduled for retirement between the years 1995 and 2005. Table 2-3 presents the attrition of this capacity as a function of retirement date. The projected retirement dates are based on a life of forty (40) years which includes life extension for each plant. A large number of operating plants have already passed their projected retirement dates, and others are scheduled to retire in the next few years. Because it is not possible to build replacement capacity for these units before 1998-9, it is apparent that a program for rehabilitation or life extension must be continued, if power shortages are to be averted. (A detailed list of unit retirements is given in Appendix A.)

Table 2-3
Retirements by Year
(MW)

Retirement Date	Available Capacity	Rated Capacity
1995	319	735
1996	0	0
1997	75	95
1998	38	50
1999	0	0
2000	126	165

Retirement Date	Available Capacity	Rated Capacity
2001	45	60
2002	4	6
2003	295	314
2004	405	462
2005	127	150
Total	**1434**	**2037**

2.2 ELECTRICITY DEMAND

Electricity demand in Russia has been declining steadily since 1990. Table 2-4 shows recent annual consumption figures for the North Caucasus and the Krasnodar Krai.

Table 2-4
Recent Electricity Consumption*

	North Caucasus		Krasnodar Krai	
Year	Bill. kWh	Index	Bill. kWh	Index
1990	63.2	1.00	17.5	1.00
1991	63.3	0.92	16.4	0.94
1992	58.5	0.93	15.3	0.93
1993	55.6	0.88	15	0.86
1994	50.4	0.80	13.5	0.77

* Total consumption (includes line losses and own usage)

The major factor affecting the decline has been decreasing industrial activity. Electricity consumption by the industrial sector declined by 53% in Krasnodar Krai between 1990 and 1994, and only the residential sector had an increase in demand during that period. The decline in demand is expected to level off during 1995-1996, and demand is expected to begin growing at about 2 to 3% annually based on current projections of economic activity for Russia and the North Caucasus region in general. (Details of the trends in past and projected electricity consumption are given in Appendix C.)

2.3 HEAT DEMAND

Heat demand has also been declining in North Caucasus and Krasnodar Krai since 1990. The rate of decline has been similar to that of electricity, with most of the decline occurring in the industrial sector. Table 2-5 below illustrates the recent trend in heat consumption in North Caucasus and Krasnodar Krai.

Table 2-5
Recent Heat Annual Consumption *

	North Caucasus		Krasnodar Krai	
Year	**Mill. Gcal**	**Index**	**Mill. Gcal**	**Index**
1990	103	1.00	28	1.00
1991	98	0.95	27	0.96
1992	87	0.84	25	0.89
1993	84	0.82	23	0.82
1994	84	0.82	20	0.71
1995 Projected	79	0.77	20	0.71

* Total consumption (includes distribution losses and own usage)

Heating needs arealso expected to continue to decline until 1995-1996 and then to resume growing at about 2-3% per year through 2005. (Additional details on the recent trends and projections for heat consumption are included in Appendix C.) Heat consumption has been declining somewhat more rapidly than electricity consumption. The overall difference is about a 10% reduction in heating relative to electricity use. While this is significant, it is not expected to have a major impact on the application of combined heat and power (CHP) electricity generation. For this reason the study has gone forward on the assumption that existing CHP capacity should be replaced in the case of unit retirements and that new base load capacity should take advantage of CHP opportunities in the selection of plant sites.

In considering sites for the Krasnodar Power Project, two major district heat demand centers were identified: the city of Krasnodar and the rapidly developing port city of Novorossiysk. Krasnodar has a base heat demand of 380 Gcal/hr and a peak demand of 1,950 Gcal/hr, while Novorossiysk has a base demand of 120 Gcal/hr and a peak demand of 525 Gcal/hr. Only these two locations are considered likely candidates for the installation of a major CHP plant. While there are other cities in Krasnodar Krai that could use heat from CHP plants, they were not considered large enough to make effective use of the heat that would result from plants of the size under consideration (450 MW and up).

2.4 CURRENT INTERREGIONAL TRANSMISSION CAPACITY

The current interregional capacity for transferring major quantities of power is two long 220 kV lines connecting the North Caucasus to the Center UPS. About 500 MW of power can be delivered to the region; only 200 MW of this can be considered as firm. A 500 kV transmission reinforcement project is currently underway that will increase the transfer capacity to 900 MW, of which 750 will be firm capacity. Further reinforcements are under consideration to make up for the loss of transmission capacity through Ukraine. (Details regarding Transmission options are presented in Appendix B.)

2.5 NEED FOR ELECTRIC GENERATING CAPACITY

As can be seen from the above discussion and Table 2-6 below Krasnodar Krai is highly dependent on other regions to provide its power needs. This dependency is endangering electricity supply reliability in the region; it also results in costly transmission losses. The situation there is reported to be resulting in adverse economic and environmental impacts, since much of the existing capacity is old, inefficient, and difficult to maintain properly. The demand for power in the region is not being met due to reliability problems and an overall shortage in capacity. This situation will only worsen with growing demand. If the system is to become reliable, there is a pressing need to provide new and replacement plants in Krasnodar Krai to meet current and projected power and heat demand levels.

Table 2-6
Electricity generation Versus Consumption
Billion Kwh

	North Caucasus			Krasnodar Krai		
	Generation	Consumption	%	Generation	Consumption	%
1993	50.6	55.6	91	5.6	15.0	37
1994	45.5	50.4	90	5.9	13.5	44

12

Figure 2-1

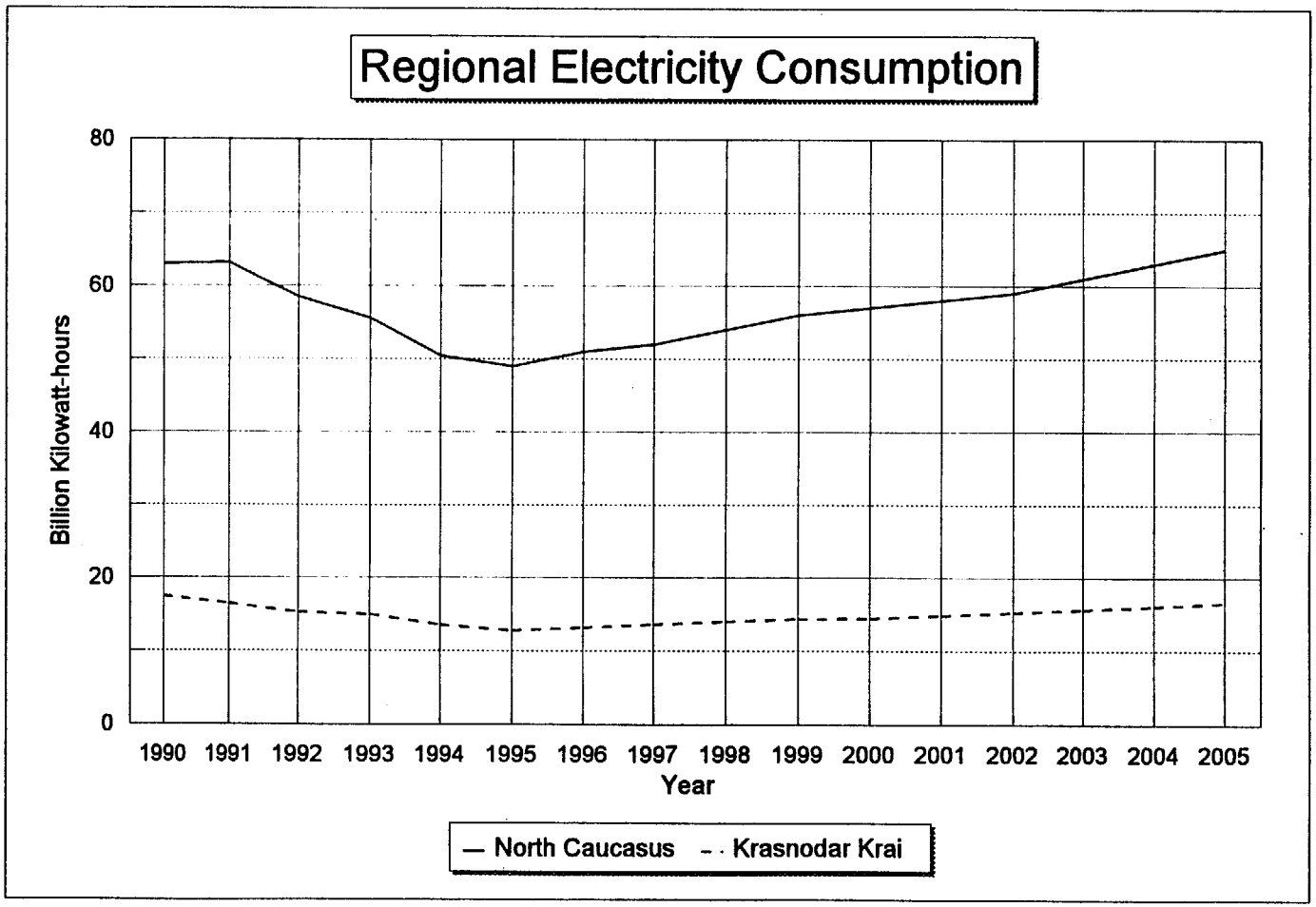
Regional Electricity Consumption
80
60
40
20
0
Billion Kilowatt-hours
1990 1991 1992 1993 1994 1995 1996 1997 1998 1999 2000 2001 2002 2003 2004 2005
Year
— North Caucasus
- · Krasnodar Krai

Figure 2-2

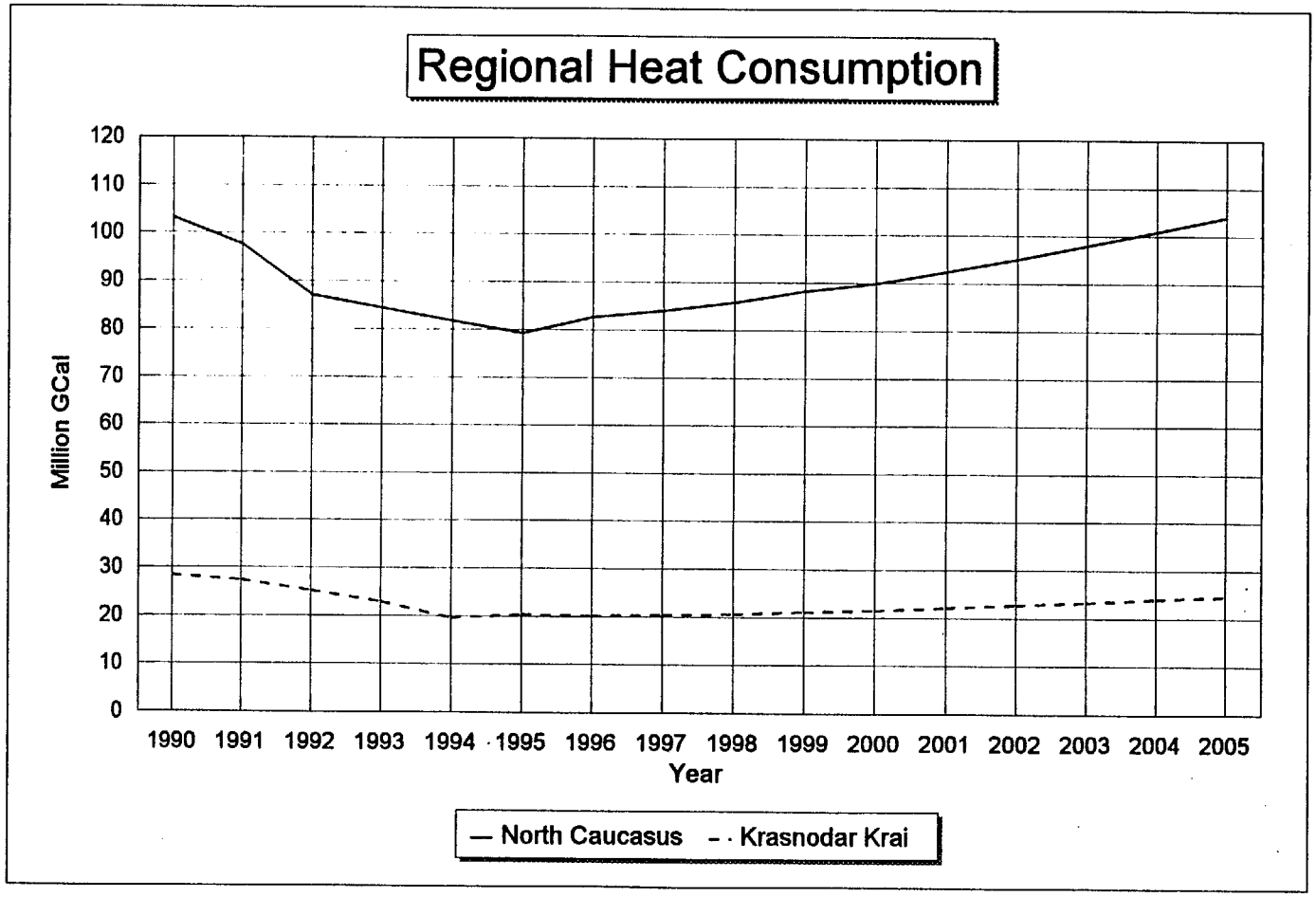
Regional Heat Consumption
Million GCal
120
110
100
90
80
70
60
50
40
30
20
10
0
1990 1991 1992 1993 1994 1995 1996 1997 1998 1999 2000 2001 2002 2003 2004 2005
Year
— North Caucasus
- · Krasnodar Krai

CHAPTER 3
OPTIONS FOR HEAT AND POWER SUPPLY

Because the North Caucasus is deficient in generation capacity, investment in new facilities is required to meet the region's current and future electricity demand. The need for additional capacity can be met through a combination of constructing new generation capacity, importing additional power from neighboring regions, and completing already-committed hydroelectric and nuclear projects. Heat demand will be met through a combination of combined heat and power plants and single-purpose boiler plants.

Within the North Caucasus region, the Krasnodar Krai has the greatest need for additional capacity. All power generation technologies can be considered to meet this capacity requirement. However, the results of the JEPAS study indicated that coal-fired power plants have high delivered fuel costs, and gas- and mazut-fired steam plants are not as efficient as (and therefore not competitive with) modern combustion turbine combined cycle plants.

3.1 CANDIDATE PROJECTS FOR THE KRASNODAR KRAI

Kubanenergo has identified three future generation sites in Krasnodar Krai: Mostovskoy, Krasnodar and Novorossiysk. Because the Krasnodar and Novorossiysk plants can serve a significant district heating load, a combined heat and power plant has been considered for them. At Mostovskoy, the heating requirements of the adjacent settlement will be met by the power plant; however, this is a small load. The Mostovskoy plant is considered a power-only plant in this evaluation.

Site-specific costs were developed for a range of plant configurations. The generation technologies considered are limited to combustion turbine applications, both simple cycle and combined cycle power plants for power only or combined heat and power plants. Table 3-1 identifies the alternate plant configurations that are being considered as candidates to meet the future electric demand of the Krasnodar Krai.

Plant Capacity. Plant configurations are based on a 150 MW capacity combustion turbine. This unit size represents an advanced design of high efficiency, and has demonstrated operating experience. The typical combined cycle power block would have two combustion turbines (300 MW total) and one steam turbine generator (150 MW) for a total capacity of 450 MW. Multiple blocks would be built to produce additional power. Power plants from 300 MW to 1,350 MW are considered.

15

Staged Construction. In developing an investment plan that reflects the timing of capacity needs, it may be desirable to build multiple blocks of power at the same site, but with blocks spaced more than one year apart. Under this scenario, the first stage of construction would include higher costs to accommodate future plant expansion. For example, the gas pipeline would be sized for the final capacity and a majority of the transmission lines, site roads and infrastructure would be built in the first stage.

Table 3-1 includes alternates for staged construction. As an example, Cases 5a and 5b represent a 900 MW plant built in two stages, while Case 6 represents the same 900 MW plant built at one time.

3.1.1 Mostovskoy Project

Simple cycle combustion turbines and combined cycle power plants up to a capacity of 1,350 MW are considered for Mostovskoy. The plants would be built at the site that is now under development by Kubanenergo. A new gas pipeline and large transmission system investment are required for this project.

The design of the gas pipeline for the Mostovskoy site is based on information provided by Kuban Gazprom for the 1,350 MW plant at meetings in April and July 1995. The design basis is as follows:

Distance:	60 km
Pressure:	5.5 MPa
Size:	one 400 mm diameter line for 300 MW (simple cycle) or 450 MW (combined cycle) one 500 mm diameter lines for 600 MW (simple cycle) or 900 MW (combined cycle) one 700 mm diameter line for 1,350 MW (combined cycle).

The line is assumed to be routed above ground and would connect to the main trunk line near Labinsk.

Kubanenergo discussed the need for two lines to the power plant, one for the primary fuel and one to supply backup fuel. Because of the very high cost of the pipeline, this is not considered to be cost-effective. The backup source of supply should be routed through the primary line.

Table 3-1
PLANT CONFIGURATION

SITE/CASE #	DESCRIPTION
MOSTOVSKOY	
1	300 MW Simple Cycle
2a	300 MW Simple Cycle - First Stage
2b	300 MW Simple Cycle -Second Stage
3	600 MW Simple Cycle
4	450 MW Combined Cycle
5a	450 MW Combined Cycle - First Stage
5b	450 MW Combined Cycle - Second Stage
6	900 MW Combined Cycle
7a	450 MW Combined Cycle - First Stage
7b	450 MW Combined Cycle - Second Stage
7c	450 MW Combined Cycle - Third Stage
8	1350 MW Combined Cycle
KRASNODAR	
9	300 MW Simple Cycle
10	450 MW Combined Cycle /CHP
11a	450 MW Combined Cycle - First Stage /CHP
11b	450 MW Combined Cycle - Second Stage/ CHP
12	900 MW Combined Cycle /CHP
NOVOROSSIYSK	
13	300 MW Simple Cycle
14	450 MW Combined Cycle /CHP

The transmission system interconnection work consists of the following projects:

1. Up to 600 MW: 220 kV (250 km) from Kurgannaya to Zilposelok, including rerouting existing lines via the Krasnodar Plant

   500 kV (44 km): reroute line Tzentralnaya - Zelenchukskaya via the Krasnodar Plant.

2. Up to 900 MW: add 220 kV (120 km) from the Krasnodar Plant to Cheremushki.

3. Up to 1,350 MW: add 500 kV (280 km) from the Krasnodar Plant to Krymskaya.

3.1.2 Krasnodar Project

Simple cycle combustion turbines and combined cycle power plants operating in a combined heat and power mode up to a capacity of 900 MW are considered for the existing Krasnodar TETS site.

Kubanenergo plans to install a 450 MW combined heat and power plant to replace two existing combustion turbines (rated about 95 MW each) and five older boilers with a combined rated capacity of about 159 MW. The initial stage will be installation of the first gas turbine in 1997, with the second gas turbine and conversion to combined cycle accomplished in 1999. This replacement project would not add new capacity and, therefore, would not require an investment in new gas pipelines or transmission facilities. Based on information provided by Gazprom, existing pipeline will need to be replaced to accommodate expansion of the power plant. The portion of pipeline assessed to the project will be 60 km. In addition, a booster compressor will be required. The pipeline will be low pressure with a diameter of 700 mm for 900 MW and 500 mm for 450 MW.

The transmission system interconnection to accommodate plant expansion work consists of the following projects:

1. Up to 450 MW: 220 kV (25 km) from the Krasnodar Plant to Alipskaya

   500 kV (180 km) from Krymskaya to the Krasnodar Plant to Tzentralnaya.

2. Up to 900 MW: add 220 kV (50 km) from the Krasnodar Plant to Vitamincombinat.

3.1.3 Novorossiysk Project

Simple cycle combustion turbines and combined cycle power plants operating in a combined heat and power mode up to a capacity of 450 MW are considered for Novorossiysk. A specific site has not been identified by Kubanenergo but site studies have not been performed. No cooling water is available at the site.

The district heating system in Novorossiysk consists of local systems around individual boiler houses. A new CHP plant would need to include a district heating trunk pipeline (700 mm underground pipe, 10 km long) to connect to the centralized district heating system.

The existing gas pipeline to Novorossiysk does not have adequate capacity and pressure to meet the requirements for this additional capacity. Based on information provided by Gazprom, a new pipeline from the Kushevskoye underground storage reservoir to Krasnodar, a new pipeline from Krasnodar to Novorossiysk will be required. Of the total length of new pipeline required, 200 km will be assessed by Gazprom to the power plant.

For a 450 MW combined heat and power plant at Novorossiysk, annual gas consumption is about 500 million cubic meters (at 85% capacity factor). Existing consumption for the City of Novorossiysk is about 800 million cubic meters based on data supplied by Gazprom. A new pipeline sized to carry 1,500 million cubic meters was assumed (700 mm diameter), with the 450 MW plant assessed one-third of the total pipeline cost plus the cost of a compressor.

The transmission system interconnection work consists of the following projects:

1. Up to 450 MW: Reroute 220 kV (25 km) from Krymskaya to Vostochnaya via Novorossiyskaya and reroute 220 kV from Krymskaya to Kirillovskaya via Novorossiyskaya (total 120 km).

2. Up to 600 MW: add 220 kV (26 km) from the Krasnodar Plant to Vitamincombinat.

3. Above 600 MW: add 500 kV (260 km) from Krymskaya to Tzentralnaya.

3.2 CANDIDATE PROJECT CAPITAL AND OPERATING COSTS

3.2.1 Power Plant Capital Costs

A summary of the capital costs for each power plant configuration is presented in Table 3-2. The cost estimates for the simple cycle and combined cycle power plants are based on plant design and site information learned in meetings with Kubanenergo and Rostov Teploelectroproject in April, as well as visits to the Mostovskoy and Krasnodar sites.

In estimating the costs it has been assumed that the combustion turbines, heat recovery steam generators, steam turbines, and the distributed control systems will be procured from international competitive bidding which will allow both foreign and Russian suppliers. For the purpose of this cost estimate U.S. prices were used. Owner's costs and allowance for contingencies are included. Taxes and duties are not included.

It was assumed that a dry cooling tower would be required at the Mostovskoy site because of environmental and other considerations, while it would be possible to use a wet cooling tower at the Novorossiysk site. At Krasnodar the existing once-through cooling system was assumed; however, further investigations will be required.

Previous cost estimates for the Krasnodar Power Generation Plant (Mostovskoy site) are based on 1991 costs in Rubles and have not been updated. In order to develop current (1995) costs, an estimate was prepared based on U.S. costs, and the local Russian content was converted into equivalent U.S. dollars using factors established in the JEPAS (Table 4-6). Specifically, U.S. costs were converted to Russian costs at the rate of 70% for materials, 75% for metals, and 50% for equipment. Taking into account current salaries and labor productivity, Russian labor costs were assumed to be 20% of U.S. costs.

3.2.2 Power Plant Operating and Maintenance Costs

A summary of the plant operating and maintenance costs and plant performance characteristics is presented in Table 3-3 for Simple Cycle and Combined Cycle power plant configurations. Performance characteristics and operating costs for the district heating configurations are presented in Table 3-4.

For estimating the operating and maintenance costs, the number of plant operating and maintenance personnel (including administrative and supervisory personnel) was assumed to be twice the number of people used at similar plants in the United States. This number is substantially below the current staffing levels in Russian power plants. Details of the staffing plan will be developed in conjunction with the Ownership Group in Task 2 of this project. Labor costs are assumed to escalate using the factors specified by the Steering Committee of the JEPAS (See Table 4-4).

Table 3-2

NEW PLANT CAPITAL COSTS

SITE/CASE #	DESCRIPTION	CONSTRUCTION TIME	CAPITAL COSTS								TOTAL
			NON-RUSSIAN (1995 US $/kW)			RUSSIAN (1995 US $/kW)					
			EQUIPMENT	INDIRECT	SUBTOTAL	EQUIPMENT	MATERIALS	LABOR	INDIRECT	SUBTOTAL	$/kW
MOSTOVSKOY		(months)									
1	300 MW Simple Cycle	24	192	44	236	19	32	7	73	131	367
2a	300 MW Simple Cycle - First Stage	24	192	48	240	19	40	8	73	140	380
2b	300 MW Simple Cycle - Second Stage	18	192	44	236	17	15	5	37	74	310
3	600 MW Simple Cycle	30	192	34	226	18	23	6	44	91	317
4	450 MW Combined Cycle	30	208	37	245	52	92	24	66	234	479
5a	450 MW Combined Cycle - First Stage	30	214	40	254	61	123	27	84	295	549
5b	450 MW Combined Cycle - Second Stage	24	202	27	229	41	35	19	27	122	351
6	900 MW Combined Cycle	42	208	34	242	51	77	23	53	204	446
7a	450 MW Combined Cycle - First Stage	30	220	49	269	73	149	29	103	354	623
7b	450 MW Combined Cycle - Second Stage	24	202	27	229	41	35	19	27	122	351
7c	450 MW Combined Cycle - Third Stage	24	202	27	229	41	35	19	27	122	351
8	1350 MW Combined Cycle	48	208	32	240	50	71	22	47	190	430
KRASNODAR											
9	300 MW Simple Cycle	24	192	44	236	19	31	7	57	114	350
10	450 MW Combined Cycle /CHP	30	208	37	245	52	58	22	50	182	427
11a	450 MW Combined Cycle - First Stage/CHP	30	214	39	253	61	81	24	66	232	485
11b	450 MW Combined Cycle - Second Stage/CH	24	202	27	229	41	34	19	25	119	348
12	900 MW Combined Cycle /CHP	42	208	34	242	50	57	21	43	171	413
NOVOROSSIYSK											
13	300 MW Simple Cycle	24	192	44	236	19	28	7	65	119	355
14	450 MW Combined Cycle/CHP	30	208	37	245	52	92	24	66	234	479

NOTES:

1. All configurations use combustion turbines in simple cycle or combined cycle mode with natural gas as fuel. Backup Fuel is #2 oil.
2. Construction time represents the number of months from award of the engineering/construction contract to commercial operation.

ASSUMPTIONS:

1. International supplied equipment includes combustion turbines, HRSGs, steam turbines and distributed control systemm
2. A dry cooling tower assumed at Mostovskoy and Novorossiysk, & a once through cooling system assumed at Krasnodar
3. Owner's Costs included in Indirects. A Contingency of 10% included in Indirects only.
4. For CHP Plants, costs are included only for work inside plant boundary with regard to industrial steam and district heating. CHP costs are $2/kW higher than combined cycle costs shown
5. To allow for front end engineering and environmental work, add one year to the lead time for Krasnodar and two years for Novorossiysk plants (each configuration) to determine earliest commercial operation date.

The assumed staffing levels are as follows:

Plant Capacity	*Number of Personnel*
300 MW simple cycle	70
600 MW simple cycle	100
450 MW combined cycle/CHP	120
900 MW combined cycle/CHP	170
1,350 MW combined cycle	220

3.2.3 Costs of Settlement at Mostovskoy and Novorossiysk (Social Costs)

Although a large settlement (about 5,000 people) is planned at Mostovskoy, the scope of this settlement goes beyond what The World Bank would consider financing as part of the project's cost. The Bank has indicated than appropriate project costs would include housing for the families of power plant personnel and directly related support facilities for them (e.g., school, medical, recreation). Any other facilities, such as retail stores and housing for the families working in these other facilities, would need to be financed outside of the project.

The subsidized housing provided to plant personnel is considered a fringe benefit that is related to the salaries paid to the personnel. The total investment required for the settlement costs for the plant personnel, support personnel, and facilities is amortized over 25 years to develop an annual charge for social costs. This annual charge is included in the fixed O&M budget.

Sufficient housing has already been constructed at Mostovskoy to accommodate the families of the maximum level of 220 plant personnel as well as families of the support personnel. Since the economic analysis does not consider costs already incurred, the social costs for Mostovskoy are assumed to be zero.

It is assumed that no additional social costs are required for the Krasnodar TETS plant since housing for plant operators already exists, and any new hires will be local people.

It is assumed that at Novorossiysk, housing and related facilities will be required for one-half of the plant personnel, with the balance of the staff hired locally.

Table 3-3

NEW PLANT PERFORMANCE CHARACTERISTICS AND OPERATING COSTS

SITE/CASE #	DESCRIPTION	STATION AUX. LOAD (MW) (1)	NET CAPACITY (MW) (2)		NET HEAT RATE (LHV) (2)		OUTAGE RATES (%)		O & M COSTS		
			Full Load	Min. Load	Full Load	Min. Load	Forced	Planned	Fixed ($/kW/yr)		Variable ($/MWh
									Labor & Mat.	Social Costs (3)	
MOSTOVSKOY											
1	300 MW Simple Cycle	1.8	300	75	10,634	15,952	4	6.9	5.38	0.00	0.07
2a	300 MW Simple Cycle - First Stage	1.8	300	75	10,634	15,952	4	6.9	5.38	0.00	0.07
2b	300 MW Simple Cycle - Second Stage	3.2	600	150	10,634	15,952	4	6.9	5.38	0.00	0.07
3	600 MW Simple Cycle	3.2	600	150	10,634	15,952	4	6.9	5.38	0.00	0.07
4	450 MW Combined Cycle	8.5	443	111	7,004	9,806	4.6	6.9	7.80	0.00	0.29
5a	450 MW Combined Cycle - First Stage	8.5	443	111	7,004	9,806	4.6	6.9	7.80	0.00	0.29
5b	450 MW Combined Cycle - Second Stag	17	886	221.5	7,004	9,806	4.6	6.9	7.24	0.00	0.29
6	900 MW Combined Cycle	17	886	221.5	7,004	9,806	4.6	6.9	7.24	0.00	0.29
7a	450 MW Combined Cycle - First Stage	8.5	443	111	7,004	9,806	4.6	6.9	7.80	0.00	0.29
7b	450 MW Combined Cycle - Second Stag	17	886	221.5	7,004	9,806	4.6	6.9	7.24	0.00	0.29
7c	450 MW Combined Cycle - Third Stage	25.5	1330	332.5	7,004	9,806	4.6	6.9	6.82	0.00	0.29
8	1350 MW Combined Cycle	25.5	1330	332.5	7,004	9,806	4.6	6.9	6.82	0.00	0.29
KRASNODAR (4)											
9	300 MW Simple Cycle	1.8	300	75	10,634	15,952	4	6.9	5.38	0.00	0.07
10	450 MW Combined Cycle	7	450	112.5	6,892	9,649	4.6	6.9	7.68	0.00	0.29
11a	450 MW Combined Cycle - First Stage	7	450	112.5	6,892	9,649	4.6	6.9	7.68	0.00	0.29
11b	450 MW Combined Cycle - Second Stag	14	900	225	6,892	9,649	4.6	6.9	7.13	0.00	0.29
12	900 MW Combined Cycle	14	900	225	6,892	9,649	4.6	6.9	7.13	0.00	0.29
OVOROSSISYK (4)											
13	300 MW Simple Cycle	1.8	300	75	10,634	15,952	4	6.9	5.38	1.78	0.07
14	450 MW Combined Cycle	8.5	443	111	7,004	9,806	4.6	6.9	7.80	1.58	0.29

NOTES:

(1) Aux. load is at full load
(2) Iso Ambient conditions, Fuel: natural gas. Units: kJ/kWh
(3) Social Costs remain constant and are amortized over 25 years
(4) Net MW and Net Heat Rate are for combined cycle plants with no district heating.
Performance data with district heating are being provided separately

24

Table 3-4

NEW PLANT PERFORMANCE CHARACTERISTICS AND OPERATING COSTS

(Combined Cycle with District Heating)

DESCRIPTION		NET CAPACITY (MW) (1)		NET HEAT RATE (LHV) (1,4)		O & M COSTS		
		Full Load	Min. Load	Full Load	Min. Load	Fixed ($/kW/yr)		Variable ($/MWh)
						Labor & Mat.	Social Costs (2)	
KRASNODAR (3)	winter	389	369	5,233	5,174			
450 MW Combined Cycle	spring/fall	409	307	5,855	5,840	8.45	0.00	0.32
	summer	428	236	6,420	6,905			
	winter	778	738	5,233	5,174			
900 MW Combined Cycle	spring/fall	818	614	5,855	5,840	8.45	0.00	0.32
	summer	856	472	6,420	6,905			
NOVOROSSIYSK (3)	winter	384	364	5,307	5,247			
450 MW Combined Cycle	spring/fall	403	304	5,942	5,926	8.45	1.58	0.32
	summer	421	232	6,517	7,008			

NOTES:

(1) Performance parameters are based upon the combustion turbine operating under iso ambient conditions, Fuel: natural gas. Units: kJ/kWh.
(2) Social Costs remain constant and are amortized over 25 years
(3) Net MW and Net Heat Rate are for combined cycle plants with district heating.
(4) The maximum district heating water supply temperature from the unit is 120 deg. C

3.2.4 Gas Pipeline and Transmission Line Costs

A summary of the gas pipeline capital costs is presented in Table 3-5, while the capital costs of the transmission system interconnections are presented in Table 3-6. Transmission system losses are also identified in Table 3-6.

The cost of the gas pipeline is based on the design description provided in Section 3.1. A current Russian cost for this pipeline is not available. An estimate was prepared based on U.S. costs. It is assumed all of the pipeline construction would be done with Russian materials and labor. The Russian costs were converted into equivalent U.S. dollars using the factors described above for the power plant (Section 3.2.1).

The costs of installing gas pipelines will be different for each site, and these differences must be considered in the economic analysis of the project.

The gas pipeline costs for Krasnodar assume that 25% of the construction would take place in an urban area (at a higher cost). The gas pipeline to Novorossiysk would be installed in conjunction with the replacement of the existing pipeline serving Novorossiysk. A gas pipeline sized to meet both the city requirements and power plant was assumed, with the power plant assessed a cost in proportion to its requirements.

The new CHP plant at Krasnodar will connect with the existing district heating network and no costs for district heating pipelines are included. The new CHP plant at Novorossiysk includes a 10 km pipeline to connect to the district heating system. This new pipeline is estimated to cost $5.88 million based on estimates provided by RAO EES Rossii.

The new CHP plants may avoid the need to install new single purpose heat only boilers to replace aging boiler plants. The analysis of plant alternatives considers the cost of heat only boilers. A heat only boiler plant consisting of multiple boilers with a total capacity of 1,000 Gcal/hr is estimated to cost $43 million.

Transmission system upgrades and additions needed to integrate power plants at either Mostovskoy, Krasnodar or Novorossiysk into the regional power system assume that existing ties to Ukraine are available, and that the first stage of the interregional tie between the Center region and North Caucasus (three 500 kV lines from Balakovskaya Nuclear Plant to the Rostovskaya Nuclear Plant) is available.

Transmission line costs are assumed to consist of 63% materials, 25% labor, and 12% right of way.

Table 3-5

CAPITAL COSTS
GAS LINE FOR NEW PLANTS

SITE/CASE #	DESCRIPTION	CAPITAL COSTS RUSSIAN (1995 US $ x1000)			
		MATERIALS	LABOR	INDIRECT	TOTAL
MOSTOVSKOY					
1	300 MW Simple Cycle	14,630	7,405	2,420	24,455
2a	300 MW Simple Cycle - First Stage	22,990	7,695	3,420	34,105
2b	300 MW Simple Cycle - Second Stage	0	0	0	0
3	600 MW Simple Cycle	22,990	7,695	3,420	34,105
4	450 MW Combined Cycle	14,630	7,405	2,420	24,455
5a	450 MW Combined Cycle - First Stage	22,990	7,695	3,420	34,105
5b	450 MW Combined Cycle - Second Stag	0	0	0	0
6	900 MW Combined Cycle	22,990	7,695	3,420	34,105
7a	450 MW Combined Cycle - First Stage	26,410	7,845	3,790	38,045
7b	450 MW Combined Cycle - Second Stag	0	0	0	0
7c	450 MW Combined Cycle - Third Stage	0	0	0	0
8	1350 MW Combined Cycle	26,410	7,845	3,790	38,045
KRASNODAR					
9	300 MW Simple Cycle	29,175	10,180	4,150	43,505
10	450 MW Combined Cycle/CHP	29,175	10,180	4,150	43,505
11a	450 MW Combined Cycle/CHP - 1st Stag	44,550	10,785	5,900	61,235
11b	450 MW Combined Cycle/CHP - 2nd Sta	0	0	0	0
12	900 MW Combined Cycle/CHP	44,550	10,785	5,900	61,235
NOVOROSSIYSK					
13	300 MW Simple Cycle	47,523	8,715	6,030	62,268
14	450 MW Combined Cycle/CHP	47,523	8,715	6,030	62,268

ASSUMPTIONS:

1. Contingency included in Indirects.
2. A 60 km gas line considered at Mostovskoy. Gas line sized for 5.5 MPa.
3. A 200 km gas line is included for Novorossiysk. Cost shown represents project share of 700 mm line sized to meet the City requirements and the power plant. A compressor is included in material costs.
4. A new 60 km gas line and booster compressor will be requried for Krasnodar for projects which increase current gas consumption. It is assumed that 25% of the pipeline is in urban areas.

3.3 OTHER POWER PROJECTS

The IPM© model considers all power generation technologies: fossil, nuclear and hydroelectric, for new capacity additions throughout Russia. Capital costs provided in the JEPAS study (in 1994 dollars) for fossil plant options were reviewed and updated. Table 3-7 identifies the capital costs for fossil plants used as input to the IPM© model for this study.

A portion of the future electric power demand in the North Caucasus will be met by hydroelectric plants that are already committed. The IPM model includes the following hydroelectric plants:

Zaramagskaya	340 MW	4 x 85 MW units.	First unit operation in 2001.
Zelentchukskaya	160 MW	4 x 40 MW units.	First unit operation in 1996.
Aushigerskaya	40 MW		

The Rostov Nuclear Power Plant is partially constructed and the option exists to complete at least the first unit of this plant. The cost used in the JEPAS study of approximately $100/kW to complete construction is not considered sufficient. Taking into consideration possible deterioration and the potential for safety upgrades, an estimate of $300/kW is assumed as the cost to complete the first unit of the Rostov Nuclear Power Plant.

3.4 INTERREGIONAL TRANSMISSION PROJECTS

The maximum transfer capability from the Center Region to the North Caucasus is 1,700 MW, including 1,340 MW going through Ukraine. This capability reduces significantly to 1,200 MW as a result of the first contingency when an intra-Ukrainian or inter-regional 500 kV line is out of service.

3.4.1 Middle Volga - Center - North Caucasus Project (Base Case)

A transmission reinforcement program consisting of four complementary 500 kV transmission additions with a total length of 975 km has been considered in the JEPAS study. The first stage consists of 360 km of 500 kV lines, related substation upgrading, and conversion of the Balakovskaya Nuclear Plant to Trubnaya 500 kV line from 220 kV to the rated 500 kV. Russian experts assume this stage will be completed within two years, irrespective of the Krasnodar project.

The second stage of the project consists of 615 km of 500 kV lines and related substation upgrading to be completed in 1997.

Table 3-6

TRANSMISSION COSTS AND TRANSMISSION SYSTEM LOSSES

Plant Size (MW)	Options	Capital Cost Million US$	Transmission Loss MW
300	2x150MW - Gas Turbines - Mostovskoy	84	-4.8
600	4x150MW - Gas Turbines - Mostovskoy	86.3	-1.9
450	1x450MW - Combined Cycle - Mostovskoy	84	-3.8
900	2x450MW - Combined Cycle - Mostovskoy	105	10.5
1350	3x450MW - Combined Cycle - Mostovskoy	192	24.5
300	2x150MW - Gas Turbines - Krasnodar	89	-8.7
450	1x450MW - Combined Cycle -Krasnodar	89	-8.5
900	2x450MW - Combined Cycle -Krasnodar	99	-3.9
450	1x450MW - CHP - Krasnodar	89	-8.5
900	2x450MW - CHP - Krasnodar	99	-3.9
300	2x150MW - Gas Turbines -Novorossiysk	19.5	-11.3
450	1x450MW - Combined Cycle - Novorossiysk	23	-12.7
450	1x450MW - CHP - Novorossiysk	23	-12.7
600	4x150MW Novorossiysk	28	-12.7
750	6x150MW Novorossiysk	123	-12.4
900	2x450MW Novorossiysk	127	-8.6

Table 3-7

COST DATA FOR NEW UN-SITED GENERATING TECHNOLOGIES

	Gross Capacity Rating (MW)	Non - Russian Cost 1994 US $/kW			Russian Cost 1994 US $/kW				
		Equipment	Indirect	Subtotal	Equipment	Materials	Labor	Indirect	Subtotal
CLEAN COAL TECHNOLOGIES									
Pulverized Coal - Supercritical	300	107	11	118	270	303	29	60	662
	500	94	9	103	239	268	26	53	586
Atmospheric Fluidized Bed (AFB)	300	332	33	365	150	377	35	56	618
NATURAL GAS TECHNOLOGIES									
Combined Cycle (1)	360	216	32	248	16	106	5	19	146
	450	216	32	248	16	106	5	19	146
Combustion Turbine (2)	40	315	47	362	23	133	7	24	187
	70	239	36	275	19	108	6	20	153
	125	192	29	221	15	87	5	16	123
COMBINED HEAT & POWER (CHP) (COGENERATION UNITS)									
Combined Cycle (3)	330	197	30	227	46	135	6	28	215
	260	197	30	227	46	135	6	28	215
	27	437	66	503	56	119	8	27	210
Combined Cycle (4)	330	0	0	0	134	114	5	38	291
	260	0	0	0	134	114	5	38	291
	27	0	0	0	198	183	10	59	450
Pulverized Coal / Steam	180	121	12	133	351	394	38	78	861
AFB / Steam	180	375	37	412	195	490	46	73	804

(1) Costs reflect Foreign supply of gas turbine, HRSG, and steam turbine equipment
(2) The 40 MW Combustion Turbine is an Aeroderivative model, and the 70 MW & 125 MW Combustion Turbines are Heavy Duty models
(3) Costs reflect Foreign supply of gas turbine and HRSG, and Russian supply of cogeneration steam turbine
(4) Costs reflect Russian supply of all plant equipment

The costs associated with the construction of the first stage of the Middle Volga - Center - North Caucasus project are considered to be committed costs and are not included in this economic analysis.

3.4.2 Volgograd-North Caucasus and Southern Center-North Caucasus Projects (Change Cases)

Additional transmission projects that could increase the power transfer capability to the North Caucasus were considered as change cases as follows:

- Volgograd - N. Caucasus (540 km of 500 kV line from Frolovo via Shahty to the Rostov nuclear power plant, 84 km of 220 kV line and related substation upgrading)
- Southern Center - N. Caucasus (525 km of 500 kV line from the Novovoronezskaya nuclear power plant to Shahty and related substation upgrading).

3.5 COMPARISON OF GENERATION PROJECT SITES

All three of the sites proposed for the addition of generation capacity in the Krasnodar Krai have certain unique advantages. They differ principally in terms of four items: transmission access, proximity to gas supply lines, district heating interconnection and the need for infrastructural improvements to support the future plant operating staff and their families. The costs of these items have been included in the overall estimates of capital and operating costs of each of the options under consideration. The costs vary with both plant capacity and technology type, as well as with the specific location of the sites.

In general, transmission costs have the most impact; plants located near load centers that are remote from existing plants and replacement plants benefit from having low transmission capital cost impacts and potentially high savings in transmission losses. This is the situation for both the Novorossiysk and Krasnodar sites, while the Mostovskoy site is adversely affected by being remote from load centers. Gas line costs are also a major factor as explained in Section 3.1 and vary for each site. Social costs are only a factor at Novorossiysk. Housing for plant staff has already been constructed at Mostovskoy, and the existing housing in the city of Krasnodar is considered to be adequate to accommodate the plant staff and their families.

In Chapter 5, the impact of the non-plant costs on the cost of power generation is identified. As described in Section 5.2, the gas pipeline cost for Novorossyisk has a significant impact on the

cost of electricity, as does the transmission cost impact at Mostovskoy. The impact of social costs are minimal.

CHAPTER 4
METHODOLOGY

4.1 OVERVIEW OF THE LEAST-COST INVESTMENT PLAN

The least-cost investment plan analysis builds upon the efforts already undertaken for the North Caucasus region under the JEPAS. The assumptions were reviewed closely with World Bank staff, enabling a set of normative least-cost plans to be developed for the North Caucasus region, focusing on Krasnodar Krai. Among the assumptions under review were: 1) the load forecast for both electricity and heat, 2) the expected evolution of the shape of the load duration curve, 3) broadening the options to include simple cycle gas turbines, 4) the potential for supply from other regions (including Ukraine), 5) the feasible start dates for new plants, 6) the cost estimates for new investments, and 7) the fuel cost assumptions.

Building on work undertaken for the JEPAS, a new power demand forecast was developed for the 1995-2020 period for the North Caucasus. Assessments of the structure of demand were undertaken to determine the expected changes in demand characteristics (e.g., the impact of decreasing base load demand due to industry closings and increases in peak demand due to growth in the household and service sector markets). The impact of inter-fuel substitution (such as the replacement of cooking loads serviced by gas with electric stoves) and energy efficiency investments have also been addressed. The demand management aspects build on analytical work undertaken by Russian consultants. The results from the more detailed analysis of the Krasnodar Krai have been used to update the demand forecast for the North Caucasus region.

The study reviewed the status of the existing assets in the Krasnodar system, focusing on the age and reliability of existing plants, and the likely timetable for decommissioning or replacing these plants. The transmission and distribution systems have been assessed to determine the impact on project costs, based on an assessment of current and forecast loss levels. The comparison of specific alternative electricity generation sites has been made using spreadsheets to identify the most appropriate choices for the Krasnodar Krai.

The study assessed the available investment options for meeting future demand. This encompassed the candidate plants that have been previously assessed by others, including plants at Mostovskoy, Krasnodar TETS, and Novorossiysk. The relative merits of combined cycle and simple cycle plants were reviewed to determine the optimal mix of plants and the staging of investments, given the need for combined heat and power. Alternative sites were assessed to evaluate the benefits of a combined approach to meeting both power and heat demand.

The study also reviewed the existing and planned generation and transmission system in the North Caucasus region to determine the potential for supplying demand in the Krasnodar Krai from elsewhere in Russia and Ukraine.

The result is an investment plan for the Krasnodar Krai regional power system, based on a thorough analysis of the trade-offs among alternative generating types and location, and transmission options evaluated over the period 1995-2020.

4.2 THE PLANNING MODELS

4.2.1 Screening Model

The evaluation of generation alternatives in a least-cost plan requires the consideration of numerous possible combinations of fuels, technologies, and sizes of generation units. In practice, the number of choices can usually be reduced somewhat because of restrictions imposed by fuel availability, system size and load characteristics; however, there can still be a very large number of alternatives to be considered in the analysis. The number of possibilities can be reduced by comparing the economic performance of each resource at different levels of utilization. This is done by a type of model known as a "screening" model.

A screening model typically does not use specific information about system load. It calculates the economic performance of each possible generation option over its full load range. By comparing the relative performance of various options at specific ranges of utilization, the most likely options can be identified for in-depth consideration by a dynamic model.

The basic methodology used in the screening analysis involves the computation of the levelized costs of capital and operating expenses. The levelized approach allows for the consideration of factors such as: increases in operating costs, construction time, and the cost of capital, in addition to present-day capital and operating cost levels. In this study, the screening analysis was also applied to determine the critical levels of seasonal district heating utilization for choosing between CHP and combined cycle applications at each site.

The screening model used in this study calculates the levelized fixed and variable operating costs in terms of $/kW-year and $/kWh, respectively. These costs are then combined for specific load factors to give production costs in terms of $/kWh. The model also includes credits for district heating in CHP units; both in terms of net savings of fuel and the avoided capital costs for heat-only boilers.

4.2.2 Linear Program Model

A core element of the least-cost planning effort is the IPM© integrated planning model, which was applied to characterize the Russian UPS as part of the JEPAS.

The IPM© is a least-cost planning model that uses a linear programming algorithm to select investment options and to dispatch generating resources to meet overall electricity demand and energy requirements. A graphical overview of the model inputs and outputs is shown in Figure 4-1.

Figure 4-1
IPM© Features

INPUTS	IPM© Operations	OUTPUTS
Existing Units Fuel Price Projections New Resources Supply-Side Renewables Demand-Side Fuel Use Constraints Transmission Limits Hourly Consumptiont	Multi-Year Simulation Multi-Regional Simulation Least-Cost Optimization	Capacity Additions Purchases Transmission Additions Fuel Use Capacity Factors Life Cycle Costs Marginal Costs

Utility generating options are characterized in terms of their capital costs, operating and maintenance costs, fuel costs, heat rates, reliability, and lead times. The amount and scheduling of available powerfrom outside the North Caucasus grid and its costs are evaluated as possible bulk power purchase options, either for economy or for firm power purchases.

Least-cost investment options are selected by the model based on:

- the cost and performance characteristics of available options
- forecasts of customer hourly consumption of electricity
- reserve margin requirements.

35

The most efficient use of the existing and new resources available is optimized given:

- the resource mix
- unit operating characteristics (including heat rate, forced outage rates, full and minimum load unit ratings)
- operation, maintenance, and fuel costs.

The model is dynamic; that is, it develops a least-cost capacity plan for the entire forecast period at once. Decisions are made on the basis of minimizing the net present value of capital plus operating costs over the full planning horizon.

IPM© also incorporates seasonal factors into the optimization process. Seasonality is critical to realistic modeling, particularly with regard to the availability of reservoir and run-of-river hydro resources, the cost and operation of pumped storage plants, and the seasonal operation of combined heat and power units. It should be noted that capacity needs projected by the IPM Model are highter than those projected using the spreadsheet analysis method. The tables in Chapters 1 and 5 are based on the spreadsheet method, and they are considered to be more conservative than the IPM projections. This is because the IPM Model takes into consideration the reductions in output of hydro plants that occur druing the winter months.

4.2.3 Power Reliability Assessment Model (P-RAM)

To complete the economic and financial analysis of the potential generating projects, estimates of the amount of electricity generated and its value were required. The value of electricity generated at each proposed plant has two components. First, electricity generated will displace more costly electricity generated at less efficient plants. Secondly, the proposed plant will meet some electricity requirements that would otherwise go unserved.

The IPM results provided estimates that estimate the first component of a plant's value. Specifically, IPM estimated the amount of electricity that will be generated by a particular plant and the marginal cost of electric generation displaced by the plant. However, IPM does not estimate the change in unserved energy that would result from the construction of the plant. For this purpose, the study team utilized a power reliability assessment model. P-RAM is designed to estimate for each hour of a planning year the loss of load probability and the amount of unserved energy.

P-RAM estimates the probability distribution of generation capacity for each hour of the planning year. This capacity probability distribution for a given hour is combined with a range of hourly load estimates that reflect load uncertainty to derive a loss of load probability.

Generation capacity additions shift the capacity probability distribution to the right effectively reducing the probability of an outage. Based on this probabilistic approach, P-Ram estimates expected unserved energy.

For this analysis, P-RAM was run twice. In the first run, unserved energy was estimated assuming that existing plants retire according to the schedule detailed in Appendix A and that no new plants, other than committed units, are to be added. In the second run, unserved energy was estimated using the same retirement schedule, but in this case 900 MW of capacity at Mostovskoy is assumed to be completed. The P-RAM results for these two runs were analyzed to estimate the change in unserved energy attributable to the proposed plant. This analysis was done for the Base Case and the Low Demand change case.

4.2.4 Base Case and Change Cases Used in the IPM© Model

The following assumptions will be included in the base case of the IPM© modeling work:

A. One demand scenario (the Base demand) will be considered based on current indications that the Russian economy has begun to rebound.

B. The model will assume that the Rostov 1 nuclear power plant will not be completed.

C. The Mostovskoy plant site will be treated as an option for development, not as a committed project.

D. The model will assume that power will not be available from Ukraine, or from other regions of Russia via Ukrainian transmission lines.

E. Political turmoil in Chechnia will not have a lasting effect on the North Caucasus transmission grid.

F. The transmission capacity linking the North Caucasus to the Center UPS will be increased to 900 MW during 1997. Of that capacity, 750 MW will be committed as "firm capacity."

G. Existing plants will be retired after 40 years.

In addition to the base case evaluations, change case model runs will be conducted based on the following changes in the model's base assumptions:

A. An additional 500 MW of transmission capacity (450 MW of firm capacity) from the Center UPS will be added to the grid.

B. A further addition of 500 MW of transmission capacity (450 MW of firm capacity) from the Center UPS will be added to the grid.

C. The transmission tie to Ukraine with a capacity of 1,400 MW will be re-established, with a firm capacity commitment of 700 MW.

D. The Rostov 1 nuclear power plant will be commissioned at the end of 1999 with a net capacity of 1,000 MW.

E. Energy demand will grow at a slower rate due to weak level of economic recovery (the low demand).

4.3 SUMMARY OF DATA AND ASSUMPTIONS

IPM© was recently used to model the entire Russian Unified Power System for the JEPAS. The multi-regional structure and plant aggregation categories developed for that study were retained for the Krasnodar project, since they offer an appropriate balance between minimizing execution time and computer resources on the one hand, and maintain sufficient detail to capture the key regional generation and transmission characteristics of Russia.

4.3.1 Regions

The North Caucasus is one of Russia's seven Unified Power Systems; it was not disaggregated for the Krasnodar analysis. However, additional detail was developed for the North Caucasus, and selected inputs were refined based on new data from RAO EES Rossii, other contractors working on the Krasnodar project, and other sources.

4.3.2 Generation Capacity

Refined data on the costs and performance characteristics of new generating units were developed. Recent data on the capacity mix and retirement schedule for the North Caucasus were compiled for this study. The capacity mix and retirement schedules for the rest of Russia used in the IPM model are those from the JEPAS.

4.3.3 Transmission

In modeling transmission links, a 360 MW link between the Center region and the North Caucasus is assumed to be in operation, of which 200 MW is treated as firm, reliable capacity for meeting peak demand. The link increases to 900 MW in 1997, of which 750 MW will be reliable for meeting peak demand requirements.

Intra-regional transmission is not explicitly modeled, but is implicitly treated as unbounded. Transmission losses are explicitly modeled; this study assumes 5% losses on inter-regional transmission. Intra-regional losses for transmission and distribution combined are 11%. The transmission losses associated with alternative capacity options were developed for the Krasnodar project.

4.3.4 Financial and Economic Assumptions

Natural gas price forecasts for the North Caucasus (shown in Table 4-1) were provided by the World Bank, and are based on the assumption that gas prices are regulated and allow for full recovery of costs plus a return on investment. For other regions, delivered natural gas prices were calculated based on city-gate price differentials derived from the July 1993 Hagler Bailly report *Principles of Natural Gas Pricing in Russia*. Gas prices increase at the rate of 2% per year starting in 2005, reflecting diminished production from the Urengoy field, which will be offset by higher-priced production in the Yamal Peninsula and other sources.

Table 4-1
Natural Gas Prices
(January 1995 U.S. $/thousand m^3, delivered)

Year	North Caucasus	Center	North West	Middle Volga	Urals	Tyumen	Siberia
1995	$40	$33	$34	$30	$27	$21	$34
1996	$43	$36	$38	$33	$30	$24	$38
1997	$47	$40	$41	$37	$34	$28	$42
1998-2005	$52	$45	$46	$42	$39	$33	$46
2010	$57	$50	$51	$46	$43	$36	$51

The coal price forecasts were used in the JEPAS fuel price sensitivity change case. Forecasts for high-grade bituminous and lignite coal in the North Caucasus are shown in Table 4-2. For comparative purposes, high-grade bituminous prices for other connected regions are shown in Table 4-3.

Table 4-2
North Caucasus Coal Prices
(January 1995 U.S.$/tce, delivered)

Year	High-Grade Bituminous	Lignite
1995	$41	$40
2000	$44	$48
2005	$48	$58
2010	$53	$69

Table 4-3
High-Grade Bituminous Coal Prices
(January 1995 U.S. $/tce, delivered)

Year	North Caucasus	Center	North West	Middle Volga	Urals	Tyumen	Siberia
1995	$41	$35	$38	$30	$26	$26	$13
2000	$44	$41	$45	$35	$30	$32	$17
2005	$48	$47	$53	$41	$35	$41	$22
2010	$53	$54	$63	$48	$40	$51	$29

Calculation of Real Escalation Rates. Real escalation of capital costs was taken into account in this analysis. The Russian component of the cost estimates was assumed to escalate over time in real terms to approach current Western levels by 2010. As listed in Table 4-4, the escalation factors used for this analysis were developed in the JEPAS.

Table 4-4
Escalation Factors
(Russian Costs Relative to U.S. Costs)

Year	Material	Equipment	Labor
1994/1995	0.70	0.50	0.10
2000	0.85	0.60	0.30
2010	0.90	0.90	0.60

40

The methodology for applying these escalation factors consisted of the following:

- The Russian equipment, labor, and material capital cost components were escalated by applying the factors in Table 4-4.
- Indirect costs were escalated using a weighted average of the material, equipment, and labor escalation rates. The weights used in this calculation were the capital costs in January 1995 U.S. dollars.
- Owner costs were escalated using a weighted average of equipment, labor, material and indirect escalation rates.
- Contingency costs were escalated using a weighted average of equipment, labor, material, indirect, and owner costs.
- Fixed operation and maintenance costs were escalated using a weighted average of labor and material escalation rates, with a 30% weight for labor and a 70% weight for materials.
- Variable operation and maintenance costs were escalated at the same rate as materials.

Other key financial and economic assumptions are listed in Table 4-5.

Table 4-5
Other Key Financial and Economic Assumptions

Real discount rate	15%
Economic growth	5% per year
Physical lifetimes	
Thermal plants	40 years
Hydroelectric plants	50 years

Cost of Unserved Energy. In order to compare projects with different completion schedules, a value for the difference in contribution toward meeting unserved demand is needed. The cost of unserved demand is evaluated using a proxy generation option that is based on the assumption that emergency diesel generators will be used to produce power when customers are denied service from the grid. This is generally what occurs during shortages when industrial and larger

41

commercial enterprises must operate in regions are curtailed. The fixed charge used for this power source is $84/kW-year and the variable cost is $0.0774/kWh.

This is based on the following assumptions:

Capital Cost	300 $/kW
Maintenance Costs	26 $/kW - year
Heat Rate	14,240 kJ/kWh
Diesel Fuel Cost	190 $/ton
Plant Life	10 years

Residential demand is not included in computing the cost of unserved energy. This is because of the policy of Russian utility companies to give priority to residential customers during shortage periods.

The magnitude of the unserved demand has been estimated by RAO EES Rossii to be approximately 58,000 MWh/year. This is based on an average curtailment of 110 MW for 132 hours per month during the months of November, December, January, and February. Using the unit costs mentioned above to determine the annual cost of unserved energy, the annual cost approximately $13.5 million, or $0.233/kWh. As this is based on a current shortage of 928 MW, we can calculate the average unit cost for unserved demand to be $14.6/kW.

4.4 DEMAND PROJECTIONS

Demand projections for electricity and heat consumption in the North Caucasus and Krasnodar Krai were developed by the Center for Energy Efficiency (CENEf) in Moscow. A complete text of CENEf's findings are presented in Appendix C. CENEf evaluated historical data and projections on economic conditions and electricity supply, and developed detailed projections for consumption through 2020. The projections for electricity and heat demand for the North Caucasus UPS are shown in Figures 4-2 and 4-3 and Table 4-6.

The base projections have been calculated on the assumption that economic growth in the region will average just under 5% during the study period. The high projection is based on the assumed economic growth rate of 8%, and the low scenario is based on the assumed growth rate of 2%.

Using the consumption figures and historical records of hourly demand, projected hourly demand curves for electricity were developed for each year through 2020. These demand curves were incorporated into the linear program model, where they are used to project capacity requirements through 2020. The annual peak demand electrical projections for the North Caucasus UPS are shown in Figure 4 - 4 and Table 4 - 6.

Figure 4-2

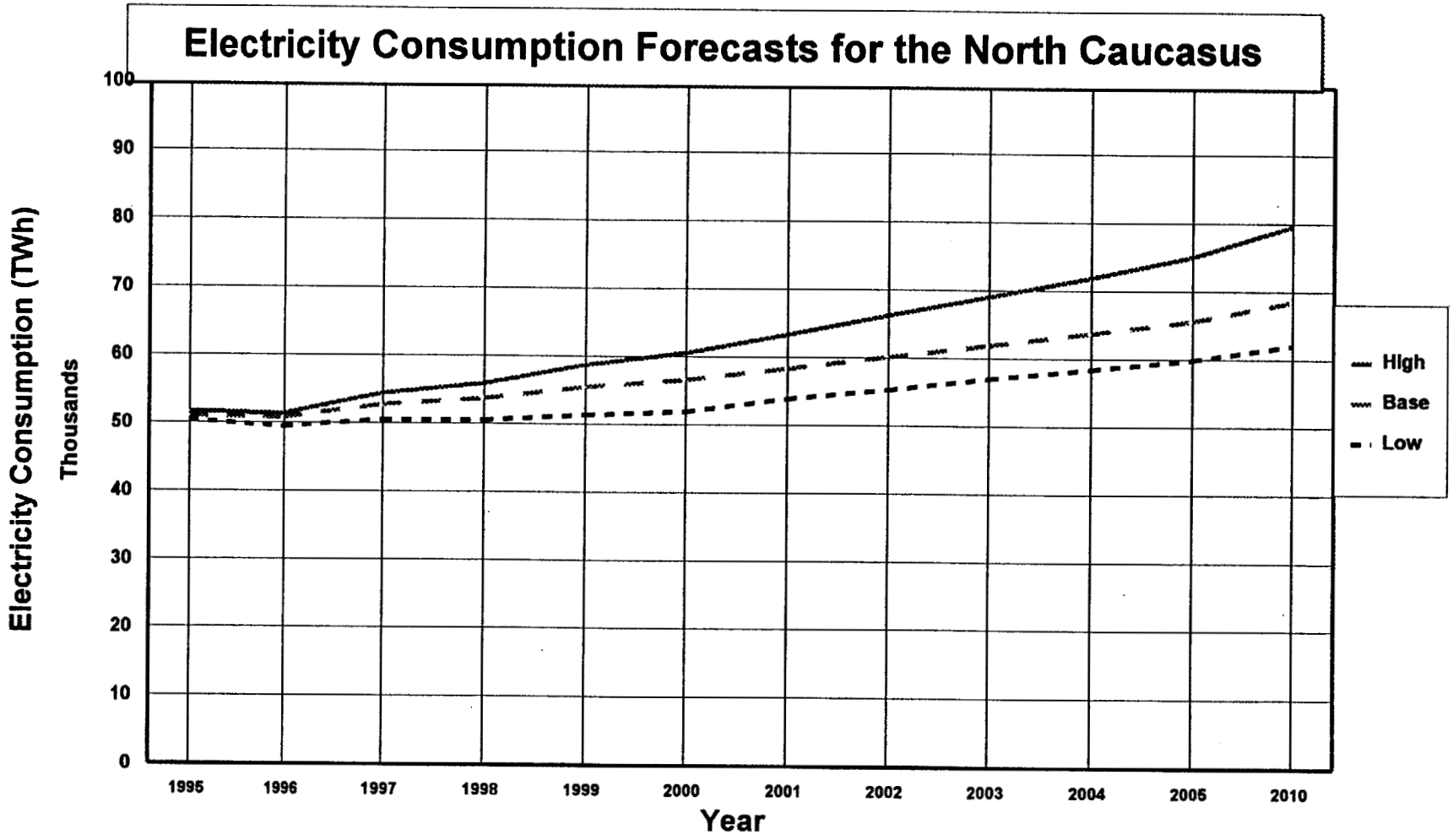
Electricity Consumption Forecasts for the North Caucasus
Electricity Consumption (TWh)
Thousands
100
90
80
70
60
50
40
30
20
10
0
1995
1996
1997
1998
1999
2000
2001
2002
2003
2004
2005
2010
Year
High
Base
Low

Figure 4-3

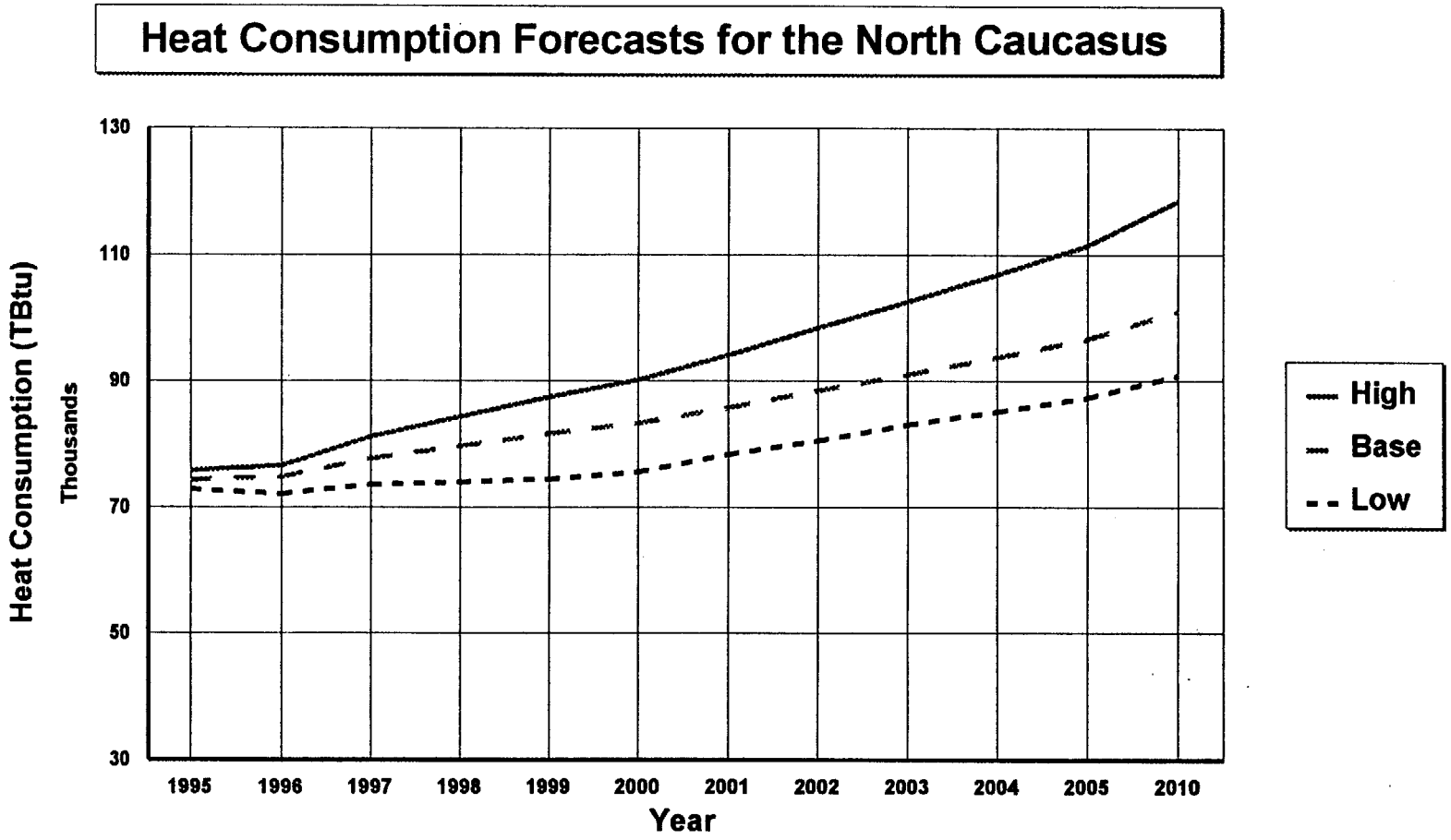
Heat Consumption Forecasts for the North Caucasus
Heat Consumption (TBtu)
Thousands
130
110
90
70
50
30
1995
1996
1997
1998
1999
2000
2001
2002
2003
2004
2005
2010
Year
High
Base
Low

Figure 4-4

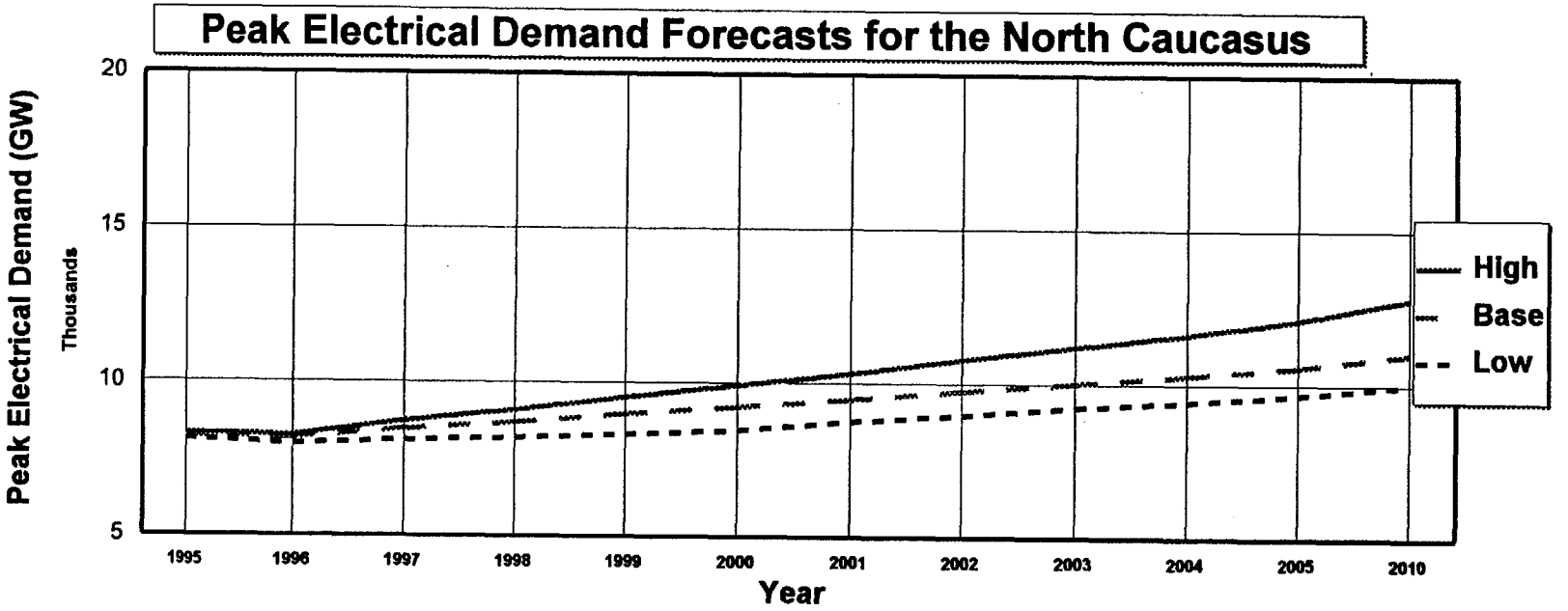
Peak Electrical Demand Forecasts for the North Caucasus
Peak Electrical Demand (GW)
Thousands
20
15
10
5
1995
1996
1997
1998
1999
2000
2001
2002
2003
2004
2005
2010
Year
High
Base
Low

Krasnodar Power Generation Project

Table 4-6

Forecasts of Heat Electricity Consumption, and Peak Electrical Demand in the North Caucasus

	Heat Demand (TBtu)			Electric Energy (GWh)			Peak Demand (MW)		
YEAR	High	Base	Low	High	Base	Low	High	Base	Low
1995	75,891	74,415	72,939	51,622	51,002	50,383	8,320	8,220	8,120
1996	76,653	74,891	72,137	51,309	50,807	49,444	8,256	8,180	7,960
1997	81,250	77,765	73,595	54,420	52,752	50,517	8,728	8,475	8,117
1998	84,367	79,713	74,057	55,975	53,723	50,579	9,083	8,697	8,189
1999	87,516	81,681	74,465	58,776	55,474	51,328	9,515	8,967	8,300
2000	90,237	83,381	75,625	60,589	56,607	51,884	9,907	9,212	8,448
2001	94,128	85,813	78,432	63,303	58,303	53,877	10,322	9,471	8,755
2002	98,482	88,534	80,600	66,251	60,146	55,318	10,773	9,753	8,976
2003	102,605	91,111	83,119	69,044	61,891	57,006	11,197	10,018	9,234
2004	106,900	93,795	85,191	71,955	63,711	58,405	11,637	10,293	9,444
2005	111,545	96,699	87,425	75,075	65,661	59,899	12,109	10,588	9,669
2010	118,533	101,066	90,926	79,637	68,512	62,071	12,818	11,031	10,015

CHAPTER 5
RESULTS

The objective of this study task has been to assess the need for the Krasnodar Power Generation Project, and evaluate the economic merits of the proposed sites, and to prepare a ranking of options that fit within definition of a least cost plan. The results of this task indicate that the development of natural gas fired plants in Krasnodar Krai, using high-efficiency combustion turbines, are an economical and necessary step in improving the power supply situation in the local area and in the North Caucasus as a whole.

5.1 SCREENING ANALYSIS - COMPARISON OF MERITS OF SITES

As mentioned in Section 3.5, all three of the sites proposed for the addition of generation capacity in the Krasnodar Krai have certain unique advantages. They differ principally in terms of three items: transmission access, proximity to gas supply lines and the need for infrastructural improvements to support the future plant operating staff and their families. In addition they differ in base heat rate and the extent of base load district heating demand. The static screening analysis was used to identify the overall impacts on the likely production costs for the three technologies when used at each of the three sites. The relative impacts of the factors are explained below. (Spreadsheets showing the detailed results of the static screening analyses for each of the sites are included in Appendix D)

5.1.1 Non-plant Cost Impacts

Transmission Costs

Of the factors not related directly to the technology, transmission had the greatest relative impact on production costs. The impacts varied from zero in the case of a replacement CHP unit for the Krasnodar TETS site to 0.0048 $/kWh for a 450 MW plant at Mostovskoy. Among options for green field plants the Novorossiysk site has an advantage over the other sites for capacities up to 600 MW; after that its transmission costs are similar to those of the Krasnodar site, with costs varying from 0.0036 to 0.0055 $/kWh. The Mostovskoy site, because of its distance from existing load centers, is only competitive at capacities of 900 MW and above in terms of transmission costs.

47

Gas Line Costs

Gas line costs are a major factor which affect all sites. The Mostovskoy site is not currently served with natural gas; a lateral of approximately 60 km to an existing gas trunk line will be needed to supply the plant. The cost of the lateral will be from $24 to 38 million depending on plant size. The cities of Krasnodar and Novorossiysk are currently served by gas lines; however, any significant increase in the needs for natural gas at either location will also require major capital investments for improving gas delivery. The only exception is the case of the 400 MW replacement plant at Krasnodar TETS, where gas is already supplied to the site. A 400 MW expansion of the Krasnodar TETS site would require gas pipeline improvement costs of $44 million, and a 900 MW expansion would require $61 million. At Novorossiysk, which is the greatest distance from the major gas trunk lines, extensive improvements for expanding the capacity of the existing gas supply pipeline would be required at costs ranging from $62 to 76 million, depending on the size of the plant.

The impact of gas pipeline investments on the cost of production for the Mostovskoy site will range from 0.0009 to 0.0043 $/kWh depending on the ultimate plant size; the impact at Krasnodar will range from zero to 0.0078 $/kWh, while the impact at Novorossiysk will vary from 0.0026 to about 0.0108 $/kWh.

Social Costs

Social costs only have an impact at Novorossiysk, since housing for the plant staff has already been constructed at Mostovskoy and the existing housing in the city of Krasnodar is considered to be adequate to accommodate the plant staff and their families. The impact at Novorossiysk was on the order of 0.0003 $/kWh for all plant sizes.

5.1.2 CHP Impact On Heat Rates

The opportunity to improve overall economic performance through the utilization of plant waste heat for district heating provides a distinct advantage to plants in or very near urban areas. The dual use of energy inputs that CHP units accomplish allow those plants to operate at effective heat rates that are substantially below comparable plants which do not make use of waste heat from the steam power cycle.

Both Krasnodar and Novorossiysk have district heating markets, and can take advantage of CHP plants. Mostovskoy is not an urban area and is not able to make use of the plant waste heat. In cases where CHP can be used, its heat rate advantage amounts to an average year-round savings of approximately 0.0008 $/kWh. In cases where a CHP plant is matched to meet a year-round base load heat demand the savings advantage can increase to approximately 0.0010 $/kWh. The high level of district heating use in Krasnodar makes it an attractive site for up to 1200 MW of CHP/Combined Cycle capacity. However, much of the demand for district heating in Krasnodar is already served, and energy conservation measures may limit or even reverse demand growth there. In Novorossiysk

48

where the base demand is much lower, 120 Gcal/h versus 380 Gcal/h at Krasnodar, a CHP plant of up to 300 MW may prove cost effective when combined with base load power generation.

5.1.3 Ranking of New Plant Options

When the factors discussed above are compiled for each plant type at each site a strong indication of the best site options for plant specific sizes results. This is easily illustrated in the comparisons of siting advantages shown in Figure 5-1 for simple cycle and combined cycle plants. These values are calculated on a technology by technology basis because changing capacity factors over time make comparisons between plants with different technologies difficult to evaluate without the use of a dynamic modeling tool such as IPM©.

The static screening results are also shown in Table 5-1. This table indicates the relative advantages of each of the sites for various combinations of Simple Cycle and Combined Cycle options. (Detailed spreadsheets showing the complete static screening analyses are presented in Appendix D.) The static screening does not present a final answer on the least cost plant options but it was used in selecting candidate options for life cycle evaluation by the IPM©. This is needed to assess the cost performance of the options in response to varying load conditions over their life time.

Table 5-1
Cost of Generation for Various Sites
Costs in $/kWh

Simple Cycle @ 40% Capacity Factor			
Size, MW	**Krasnodar**	**Mostovskoy**	**Novorossiysk**
300	0.0607	0.058	0.0519
600	0.0494	0.0474	0.0469
900	0.0487	0.0476	0.0511
Combined Cycle @ 80% Capacity Factor			
Size, MW	**Krasnodar**	**Mostovskoy**	**Novorossiysk**
450	0.0333	0.0339	0.0320
900	0.0306	0.0318	0.0336
1350	N/A	0.0320	N/A

A second time related factor that must be considered in selecting least cost options is the probable completion time of each of the plant options. Because there is a severe shortage of power in the

region, economic losses are accumulating as a result of power curtailments. The sooner this situation is resolved the sooner the region will recover economically. This places a premium on plant options that can be brought on line quickly.

5.1.4 Replacement Projects

Replacement power projects offer substantial advantages over greenfield plants in cases where the construction of the replacement plant can occur while the existing units remain on line. The reasons include savings in land and infrastructure costs, the existence of the necessary transmission and fuel supply lines, and the absence of social costs that could result if workers at the existing sites were to become unemployed or have to move. This is the situation at the Krasnodar TETS site. The plant is currently scheduled to have a total capacity of 350 MW replaced over the period of 1998 to 1999 with a 400 MW Combined Cycle Plant. The replacement of that capacity with a state of the art CHP/Combined Cycle plant will provide a more economical option than any of the other plants considered in this study. This plant will be capable of supplying 400 MW of power while operating in a CHP mode and 450 MW when operated to obtain maximum electrical output. For this study, which is based on a winter peak electrical load, we have treated it as a 400 MW plant of firm capacity.

As the Krasnodar TETS plant is the only thermal site of any magnitude within Krasnodar Krai, it is the only candidate for replacement power. All other sites are considered to be greenfield sites. It is assumed that up to 400 MW additional capacity can be added adjacent to the Krasnodar TETS plant when 300 MW of the older CHP units are retired in 2003.

5.1.5 Static Screening Results

Combined Cycle Options

Combined cycle options fall into two categories: with and without district heating. The study has determined that CHP plants will offer advantages in cases where the annual district heat demand, that which is not already served by a CHP installation, is equal to approximately 60 percent of the annual heat generation capacity of the unit to be added. This condition is satisfied for a capacity equivalent to two 400 MW installations at Krasnodar (presumably one as a replacement of the existing units that are about to be retired and the second a new unit). At Novorossiysk, a single unit of 400 MW will exceed the current base load heat demand, so it would take full advantage of the CHP fuel savings opportunity for perhaps 8 to 10 years (see Figures 5.2 and 5.3). Once the CHP opportunities are satisfied, conventional Combined Cycle units will provide least cost options where base load capacity is needed. The following list gives a rank order of Combined Cycle options starting with the lowest cost alternative (Production costs are at 80% capacity factor):

Site	Capacity	Production Cost, $/kWh
Krasnodar CC/CHP	400 MW	.0236
Mostovskoy CC	900 MW	.0318
Novorossiysk CC/CHP	400 MW	.0320
Novorossiysk CC	450 MW	.0320
Krasnodar CC	450 MW	.0333
Mostovskoy CC	450 MW	.0339

Simple Cycle Options

The ranking of simple cycle options is more straight forward that for the Combined Cycle options. There are no similar plants scheduled for near term retirement, and there is no CHP alternative for this technology. The following list gives a rank order of 300 MW and 600 MW Combined Cycle options starting with the lowest cost alternative (Production costs are at 40% capacity factor.):

Site	Capacity	Production Cost, $/kWh
Novorossiysk	600 MW	0.0469
Mostovskoy	600 MW	0.0474
Krasnodar	600 MW	0.0494
Novorossiysk	300 MW	0.0519
Mostovskoy	300 MW	0.0580
Krasnodar	300 MW	0.0607

With the ranking information above decisions can be made based on the overall need for capacity in the region as to where to add plants and in what order.

5.2 RESULTS OF THE IPM ANALYSIS

The North Caucasus is in need of substantial generation capacity additions in the immediate future. At this time, there is a program of Hydroelectric plant additions, totaling 160 MW, that is scheduled to bring capacity on line gradually between 1996 and 2000. In addition, a 500 kV transmission link with the Center UPS is scheduled to be completed in 1997. This will provide an additional 550 MW of firm capacity to the region. There is also a current program to replace 159 MW of aging boiler equipment and 190 MW of combustion turbines at the Krasnodar TETS site with a 400 MW CHP/Combined cycle plant. The IPM analysis indicated that, even with these additions, there is a pressing need for building new gas fired power plants in the North Caucasus

51

5.2.1 IPM Base Case Results

With regard to gas fired plants, the study has found that there is a need for the addition of approximately 940 MW of new thermal capacity in the North Caucasus in 1998; this is the earliest date that is considered feasible for commissioning new units. The study has also determined the need for about 268 MW additional capacity in 1999, and for approximately 405 MW of capacity in 2000. This will be necessary to maintain a system reserve margin of 14 percent, which is considered to be the minimum for assuring reliable system operations. These additions would add a total of 1800 MW in gas fired capacity to the North Caucasus UPS during the next five years. Because new and replacement capacity cannot be commissioned prior to 1998, a potential capacity shortage, ranging from 689 to 1103 MW, will exist in the region through 1997. To eliminate the shortage, it will be necessary to extend the life of some of the units that have been scheduled to be retired through 1998. This is necessary because there is no practical possibility for adding new generating capacity before that year.

The attached Table 5-2 indicates the annual needs to add new capacity as demand grows and retirements reduce the capacity available from existing units. The table also shows that it will not be possible to eliminate capacity shortages until 1998. This is because there is no practical possibility for adding thermal new generating capacity before that year. Detailed results of the IPM base and change cases are presented in Appendix E.

5.2.2 Change Case Results

Five change cases were evaluated to determine the potential impacts of possible changes in the economic climate or electricity supply situation in Russia. These are discussed below.

Low Growth Scenario - A change case was developed using the low growth demand projection shown in Section 4.4, to assess the impact of a slow recovery of economic activity in Russia. This case showed a sharp drop in the need for additional capacity in the North Caucasus throughout the study period, with the need for added fossil capacity additions between 1998 and 2005 declining from 4030 to 2970 MW, when compared to the Base Case. The low growth scenario also indicated that the near term capacity shortage would be eased, although it would not go away. This was due to peak demand declining to 7960 MW in 1996, and not returning to the 1994 level until 2001.

500 MW Transmission Reinforcement - This change case evaluated the impact of a 500 MW transmission capacity reinforcement which would provide an additional 450 MW of firm capacity from the Center UPS. The addition of a substantial amount of firm capacity being provided through further development of the Center-North Caucasus transmission link would decrease the need for adding capacity by 500 MW. This project is currently under consideration, but the capital and operating costs have not been determined. While such a project might lead to lower initial costs, it is likely that over the long run that costs associated with high transmission costs and reduced system reliability would out weigh the initial savings. Further study of this option

52

is needed to determine if it would be cost effective.

1000 MW Transmission Reinforcement - This change case evaluated the impact of adding 1000 MW of capacity to provide 900 MW of firm capacity from the Center and Mid-Volga UPS's. This project is essentially the same as the previous case, except for its magnitude. It would reduce the capacity addition needs by 1000 MW over the study period. The same concerns exist regarding transmission losses and reliability. There is also a question as to whether ample sources of low cost power will be available from the Center and Mid-Volga UPS's to satisfy this added demand. Further study is also needed for this option.

Reestablishment of Transmission via Ukraine - Prior to the break-up of the USSR, and for some time thereafter, up to 1400 MW, of which 700 MW was firm capacity power that was generated at nuclear plants in the Center UPS was transmitted to the North Caucasus via the Ukraine grid. This practice was discontinued due to frequency control and reliability problems within the Ukraine transmission system. While the possibility exists to reestablish this link, there are serious technical and political problems in the way. It is highly unlikely that transmission via Ukraine could be restored prior to 1999; but if it reestablished in that year it would eliminate the need to provide fossil capacity additions during 1999 and 2000.

Rostov 1 - The work on the Rostov nuclear plant is currently suspended due to public concern about its safety and lack of funds. Minatom is endeavoring to get approvals to complete this 1000 MW plant, and may succeed in doing so by as early as 2000. While this addition of 947 MW of firm capacity would result in eliminating the need for fossil capacity additions from 2000 to 2003, it does not displace need for added capacity in the near term.

5.2.3 IMPLICATIONS OF CHANGE CASES

In the sensitivity cases, the largest change in projected total capacity additions in the North Caucasus occurred in the low demand case, Change Case 1. In this case, total capacity additions are projected to be 1,050 MW lower than in the base case. In Change Cases 2 through 4, transmission capacity additions into the North Caucasus capacity were analyzed, total capacity additions decline by roughly the amount of firm transmission capacity assumed. In Change Case 5, in which the Rostov Nuclear plant is assumed to be completed, total capacity additions at the Mostovskoy site decline by 940 MW, which is the size of the Rostov nuclear plant.

In all of the change cases, the addition of 300 MW is called for at Mostovskoy in 1998. The timing of subsequent additions at that site varies with the individual change cases. Although the amount of capacity addition requirements in the North Caucasus are reduced in the change cases due to transmission additions or a nuclear plant completion, 1350 MW of combined cycle capacity will be needed at the Mostovskoy location on, or before, 2005. In addition, at least 800 MW of combined cycle capacity additions are needed at the Mostovskoy on, or before, 2001 in all of the change cases.

Considering the possible timing impacts of the events considered in the change cases, it is prudent to build the plant in two stages. The first stage, of 900 MW, should be commenced as soon as possible. The second should be 450 MW to be started when the timing for the addition becomes more certain.

With the exception of the already committed upgrading of the Krasnodar TETS plant, the installation of capacity at Mostovskoy was selected by the model as the next generation addition. This was so for all cases studied. Thus, the Integrated Planning Model analysis justifies the immediate commencement of the staged building of a 1350 MW combined cycle power station at Mostovskoy as next generation expansion project for the North Caucasus region.

5.3 SELECTION OF PREFERRED SITES IN KRASNODAR KRAI

Regarding the location of the new capacity, Krasnodar Krai is the most appropriate area in the North Caucasus for major capacity additions because over 600 MW of existing capacity is scheduled to retire before 2005 and the region is already heavily dependent on other regions for power. Of the three potential sites in the area, only the Mostovskoy site is available for the addition of new capacity in 1998 and, it is limited to the addition of simple cycle gas turbines due to construction lead time concerns. The other two sites are expected to require an additional year or two of lead time because of the need for environmental studies to verify that they would be appropriate for building new power plants. The impact of unserved demand is noted in Section 4.3.4 as $14.6 kW. When this is taken into account, the two year lead time advantage of Mostovskoy translates into a savings of $.0009kW/h for the combined cycle options and $.0014/kWh for the simple cycle options. (The figures shown in Section 4.6 above have not been adjusted to account for this, as they are not date specific. However, in determining the cost advantages of projects on specific schedules, they should be included.)

The Mostovskoy site offers a number of advantages including its availability for early development. The site's only drawback is that it is not located near the major load centers in the region. The Krasnodar and Novorossiysk sites are located at major load centers, which reduces transmission costs, and they offer the opportunity for improved economic efficiency through their use as Combined Heat and Power Plants. However, only the replacement of the older CHP units at Krasnodar TETS offers a lower cost alternative to the Mostovskoy project. Given that work is already proceeding for those replacements, the next project for the North Caucauses should be done at Mostovskoy. Recognizing the advantages of having plants located near load centers, it is likely that some smaller plant additions after 2000 will be attractive at Novorossiysk, subject to further investigation of the advantages of that site.

Considering all of the above factors the following is considered to be the best approach to meeting needs for immediate capacity additions while keeping the long term costs to a minimum:

	300 MW	Simple Cycle	Novorossiysk
2001	300 MW	Simple Cycle	Novorossiysk or Mostovskoy
TOTAL	1900 MW		

5.4.1 CHANGE IN UNSERVED ENERGY

IPM was not used to estimate the change in unserved energy that would result from the construction of the Mostovskoy combined cycle plant. For this purpose, we utilized the Power Reliability Assessment Model. P-RAM has been designed to estimate for each hour of a planning year the loss of load probability and the amount of unserved energy.

P-RAM estimated the probability distribution of generation capacity for each hour of the planning year. This capacity probability distribution for a given hour was combined with a range of hourly load estimates that reflect load uncertainty to derive a loss of load probability. Generation capacity additions improve the capacity probability distribution thereby reducing the probability of an outage. Based on this probabilistic approach, P-RAM estimated expected unserved energy.

For this analysis, P-RAM was run twice. In the first run, unserved energy was estimated assuming that existing plants retire according to the schedule detailed in Appendix A, and that no new plants, other than committed units, were added to the grid. In the second run, unserved energy was estimated using the same retirement schedule, but in this case the Mostovskoy combined cycle plant was assumed to be completed. The P-RAM results for these two runs were analyzed to estimate the change in unserved energy attributable to the Mostovskoy plant.

Table 5-4 provides the results of the P-RAM analysis for the base case. Column 2 shows the estimated electricity generated by the Mostovskoy plant over the period 1998 through 2020. Column 3 presents the change in unserved energy attributable to the Mostovskoy plant as estimated by P-RAM. In the base case, the change in unserved energy was estimated to rise over time such that by 2005 nearly the entire output of the Mostovskoy plant will lead to reductions in unserved energy.

TABLE 5-4 GENERATION IMPACT OF THE MOSTOVSKOY PLANT Base Case		
	ENERGY GENERATED (MWh)	CHANGE IN UNSERVED ENERGY (MWh)
1998	305,000	305,000
1999	3,266,000	1,353,000
2000	6,536,000	2,633,000
2001	7,002,000	3,364,000
2002	7,002,000	3,829,000
2003	7,002,000	4,755,000
2004	7,002,000	5,934,000
2005	7,002,000	6,630,000
2010	7,002,000	7,002,000
2015	7,002,000	7,002,000
2020	7,002,000	7,002,000

5.4.2. PRODUCTION COST SAVINGS

A certain amount of the electricity generated at Mostovskoy will result in reduced generation costs within the regional power system. The portion of the power produced by the plant that does not represent otherwise unserved demand, will displace more costly electricity generated at less efficient plants. That quantity is the difference between columns 2 and 3 in Table 5-4. The value of the savings can be conservatively estimated the using difference between variable cost of production at Mostovskoy and at the next most economical plant. The table below indicates the difference in production costs between the Mostovskoy 900 MW combined cycle plant and average cost of production at the gas fired CPP plants in the North Caucasus RPS. The values are in terms of 1998 production costs. (Because there is a total of 3253 MW of gas fired CPP capacity in the region, it represents a very close approximation of the marginal cost of production for the system would be without Mostovskoy.)

56

Krasnodar - continue with the replacement of the two existing 95 MW simple cycle units in 1997 and 1999, with conversion to combined cycle in 1999. This will give a winter peaking capacity of 400 MW.

Mostovskoy - construct 600 MW Simple cycle addition for 1998-99 operation, with conversion to combined cycle operation in 1999 or 2000 to bring the capacity at that site to 900 MW. Allow for the possibility to add another 450 MW of combined-cycle as early as 2000 depending on the rate of demand growth during the next few years.

Novorossiysk - provide 300 to 600 MW simple cycle for operation in 2001, with partial conversion to combined cycle if and when CHP operation is shown to economical or if additional base load capacity is needed.

This will bring the capacity in the Kubanenergo RPS up to 2366 MW (assuming that 900 MW is built at Mostovskoy); this would amount to approximately 22% of the total capacity in the North Caucasus IPS which compares favorably with Kubanenergo's average share of 27% of overall electricity consumption, given that the region does not have substantial hydro resources.

Below is the recommended sequence for capacity additions for Krasnodar Krai based on modelling results, and the use of standardized plant capacity increments of 300 MW for simple cycle additions and 450 MW for combined cycle additions:

Table 5-3
Recommended Capacity Additions for Krasnodar Krai

Year	Capacity Addition	Technology	Location
1997	150 MW	Simple Cycle	Krasnodar
1998	300 MW	Simple Cycle	Mostovskoy
1999	150 MW	Simple Cycle	Krasnodar
	100 MW	Steam Cycle Add-on	Krasnodar
	150 MW	Steam Cycle Add-on	Mostovskoy
	300 MW	Simple Cycle	Mostovskoy
2000	150 MW	Steam Cycle Add-on	Mostovskoy

Table 5-5
Differential Energy Production Costs
Mostovskoy versus Most Economical Alternative

	Fuel Cost, $/kwh	Variable O&M, $/kwh	Total Variable Cost, $/kwh
Mostovskoy	0.0114	0.0005	0.0119
Gas fired CPP*	0.0121	0.0011	0.0132
Difference			0.0013

*from JEPAS determination of average generation costs.

As can be seen in the table, generation at Mostovskoy in lieu generation elsewhere will yield an average savings of $0.0013 per KWH. The approximate value of these savings are shown below for the years 1999 through 2005:

Table 5-6
Calculation of Generation Cost Savings

Year	Differential Generation, GWH	Savings, $ Millions
1999	1913	2.49
2000	3903	5.07
2001	3638	4.73
2002	3173	4.12
2003	2247	2.92
2004	1068	1.39
2005	372	0.48

5.5 QUALIFICATIONS REGARDING ASSUMPTIONS

Mostovskoy's Timing Advantage - It should be noted that while Mostovskoy is not the lowest cost plant for simple cycle options, it is very close in terms of life costs to the least cost option. When this is considered in light of the fact that it can be brought online to relieve the current power shortage in the region one to two years earlier than the alternatives, Mostovskoy can also be regarded as the least cost option for providing near term peaking capacity.

Novorossiysk Plant Site - Although a potential site for a power plant in Novorossiysk has been identified, no site investigations have been performed. An assessment of the district heating system in Novorossiysk, and the use of a new power plant as a source for a centralized district heating system needs to be evaluated. Investigation of sources of water supply, waste water disposal and potential environmental impacts need to addressed in a detailed feasibility study. In view of the above, it is considered that a new plant at Novorossiysk could not be constructed before the year 2000.

Small Scale Plants Not Evaluated - Small scale plants (75 to 200 MW) at locations such as Sochi, Temyruk and elsewhere were not considered in this study. Because of the pressing need for large scale additions of generating capacity in the region the study focused on plants of 300 MW and larger. There are however sites, primarily at the extreme ends of the grid, that may be good choices for small scale plants that would substantially improve local power reliability and reduce line losses. It may be worth to identify and evaluate these options in a more comprehensive study of the region's needs for power generation.

CHP Requirements - This study has made certain assumptions regarding the demand for district heat. These assumptions yield favorable indications of potential cost savings for the CHP/Combined cycle plants that could be installed in Krasnodar and Novorossiysk. There is considerable speculation regarding the future need for maintaining district heat production capacity at levels that are comparable to current day levels. It is the opinion of some experts who have studied the district heating practices in Russia that considerable savings could be obtained through conservation and efficiency improvement measures. Before commitments are made for adding CHP capacity in the region a detailed evaluation of the potential for reducing district heating needs through demand side management programs should be undertaken.

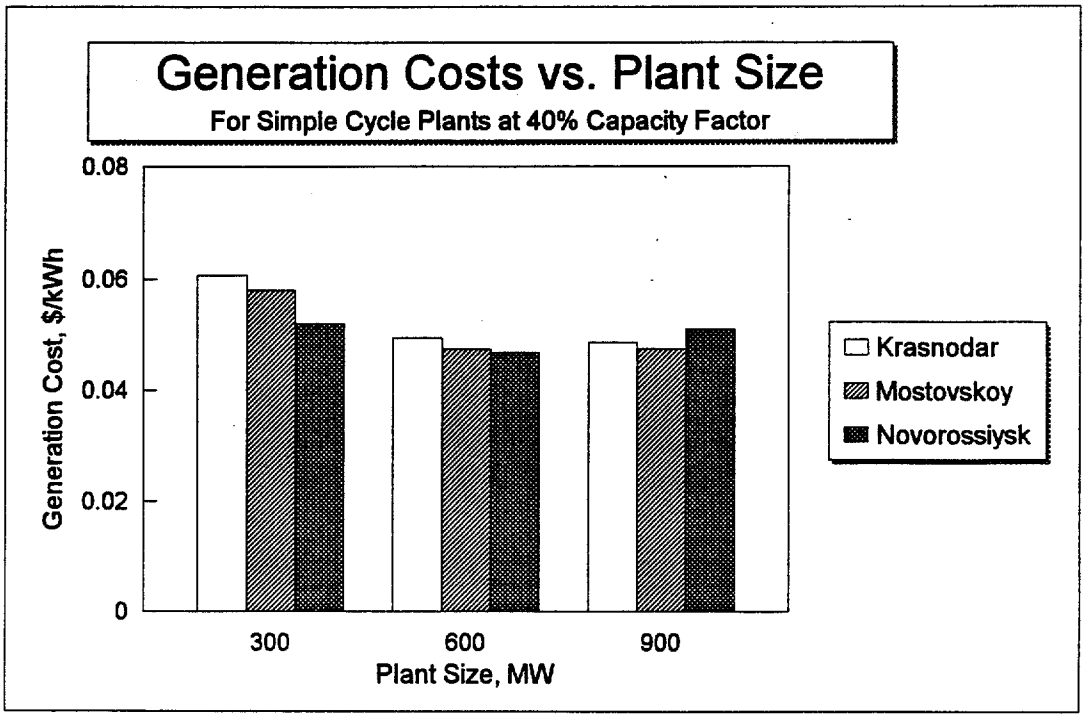
Generation Costs vs. Plant Size
For Simple Cycle Plants at 40% Capacity Factor
Generation Cost, $/kWh
0.08
0.06
0.04
0.02
0
300
600
900
Plant Size, MW
Krasnodar
Mostovskoy
Novorossiysk

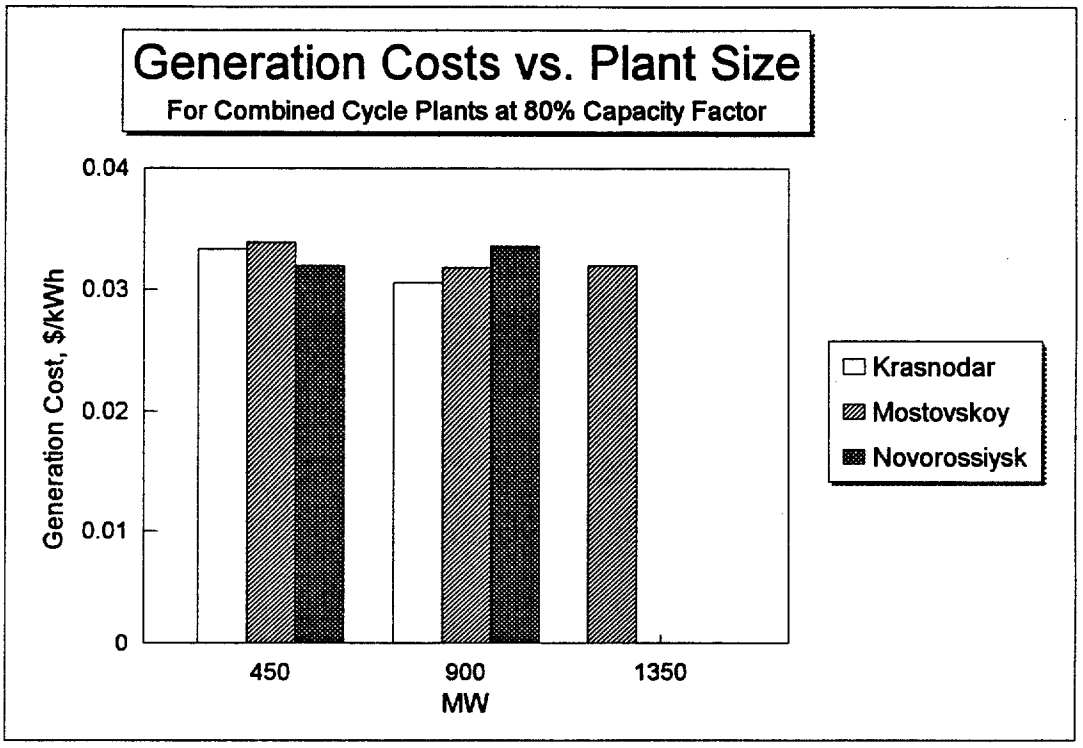
Generation Costs vs. Plant Size
For Combined Cycle Plants at 80% Capacity Factor
Generation Cost, $/kWh
0.04
0.03
0.02
0.01
0
450
900
1350
MW
Krasnodar
Mostovskoy
Novorossiysk

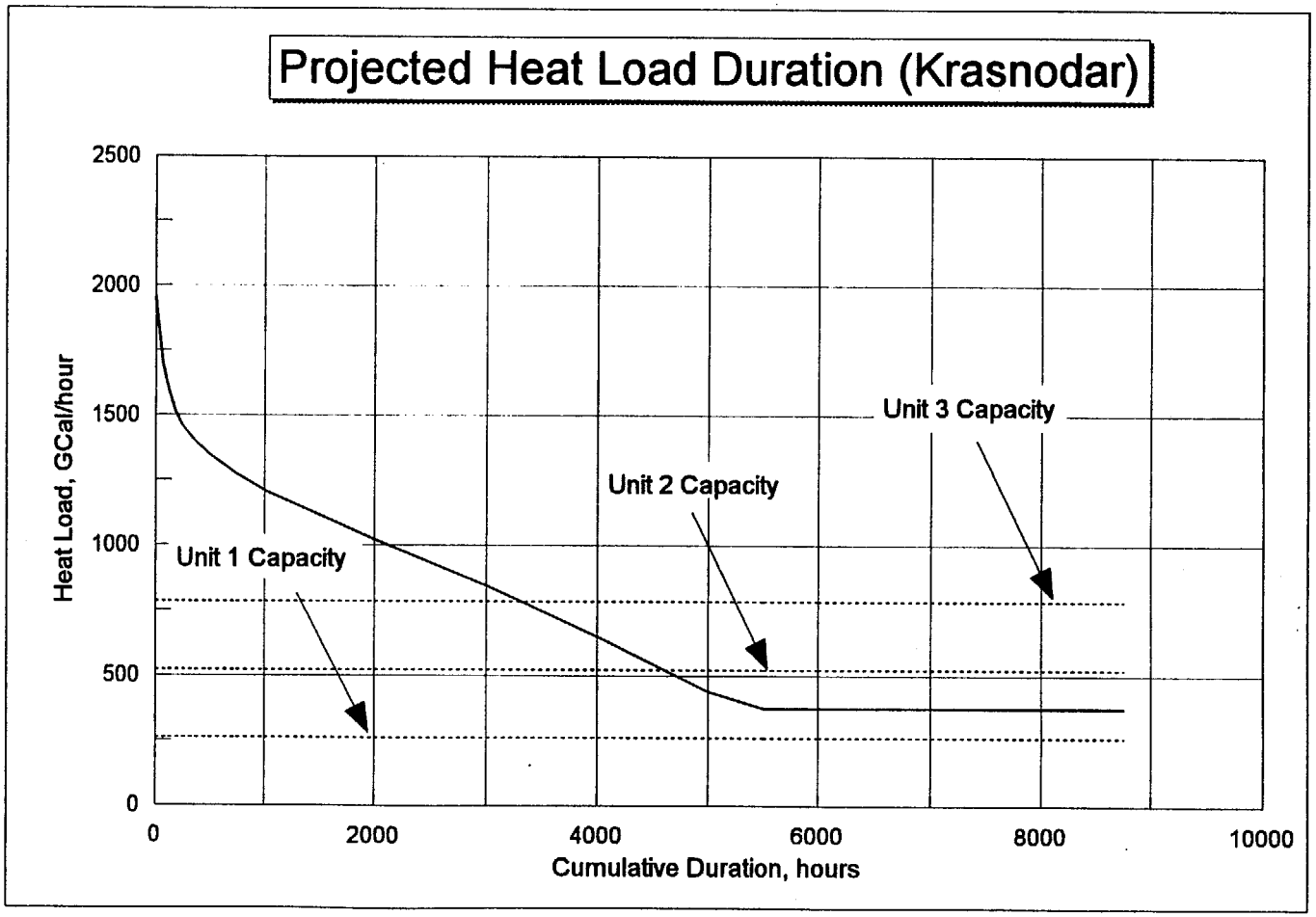
Projected Heat Load Duration (Krasnodar)
Heat Load, GCal/hour
2500
2000
1500
1000
500
0
0
2000
4000
6000
8000
10000
Cumulative Duration, hours
Unit 1 Capacity
Unit 2 Capacity
Unit 3 Capacity

ESTIMATION OF REQUIRED CAPACITY NEEDS FOR NORTH CAUCASUS - BASE CASE

Year	Capacity Retirements MW	Existing Capacity MW	Peak Demand MW	Required Capacity MW	Hydro Additions MW	Trans. Additions MW	Projected Capacity MW	Fossil Additions MW	Potential Shortage MW
1994		8562	8616*						
1995	319	8243	8220	9371	0	200	8443	0	928
1996	0	8243	8180	9325	40	0	8483	0	842
1997	75	8168	8475	9662	40	550	9148	150	514
1998	38	8130	8697	9915	40	0	9915	765	0
1999	0	8130	8967	10222	40	0	10222	268	0
2000	126	8004	9212	10502	0	0	10502	405	0
2001	45	7959	9471	10797	85	0	10797	255	0
2002	4	7955	9753	11118	85	0	11118	240	0
2003	295	7660	10018	11421	85	0	11421	512	0
2004	405	7255	10293	11734	85	0	11734	634	0
2005	127	7128	10588	12070	0	0	12070	463	0

* Includes 110 MW of unserved demand.

APPENDIX A

LIST OF PLANTS AND RETIREMENT SCHEDULE

The following pages show installed units and the assumed retirement schedule for fossil fueled generating capacity in the North Caucasus.

63

Fossil Plants in North Caucasus

	CAPACITY Rated MW	CAPACITY Avail. MW
UPS TOTAL THERMAL CAPACITY	**8377**	**6597**
UPS TOTAL HYDRO CAPACITY	**2180**	**1969**
UPS TOTAL CAPACITY	**10557**	**8566**

PLANT	UNIT #	FUEL	I.O. Year		
KUBANENERGO					
Armavirskaja CHP	1	gas	1959	2	2
	2	gas	1958	6	5
Total for the plant				8	7
Krasnodarskaja CHP	1	gas	1954	25	19
	2	oil	1955	20	15
	3	gas	1957	22	17
	4	gas	1959	50	38
	5	gas	1961	42	32
	6	gas	1963	145	138
	7	gas	1963	150	143
	8	gas	1964	150	143
	9	gas	1966	160	152
gas turbine	10	gas	1970	75	75
gas turbine	11	gas	1975	0	0
Total for the plant				839	772
CHP of Maikopsky CKK	1	gas	1964	6	4
	2	gas	1964	6	4
Total for the plant				12	8
CHP of Krasnodarsky X	1		1964	12	12
	2		1989	12	12
Total for the plant				24	24
CHP of Kropotkinski X	1	gas	1959	6	2
	2	gas	1960	4	1
Total for the plant				10	3
Sugar Plants' CHP	51	gas	1970	158	0
Block-plants	51	gas	1976	14	6
Total for the RPS				**1065**	**820**

64

STAVROPOLENERGO					
Stavropolskaja TPP	1	gas	1975	300	267
	2	gas	1975	300	267
	3	gas	1976	300	267
	4	gas	1976	300	267
	5	gas	1978	300	267
	6	gas	1979	300	267
	7	gas	1981	300	267
	8	gas	1983	300	267
Total for the plant				2400	2136
Nevinnomysskaja TPP	1	gas	1960	25	19
	2	gas	1960	25	19
	3	gas	1961	60	45
	4	gas	1968	50	34
	5	gas	1973	100	85
	6	gas	1964	150	127
	7	gas	1964	150	127
	8	gas	1965	150	127
	9	gas	1966	150	127
	10	gas	1967	150	127
	11	gas	1970	160	136
	12	gas	1972	170	144
Total for the plant				1340	1117
Kislovodskaja CHP	2	gas	1958	4	0
	3	gas	1981	0	0
Replacement	4		1993	6	6
Total for the plant				10	6
Isobilnensky Sugar CHP	1	gas	1968	6	0
	2	gas	1968	6	0
Total for the plant				12	0
Stavropolskaja Geo TPP	1		1993	0	0
Total for the RPS				**3762**	**3259**
SEVKAVKAZENERGO					
Total for the RPS				0	0

GROZENERGO

CHP-4 Grozenergo	1	gas	1962	6	0
	2	gas	1962	6	0
Total for the plant				12	0
CHP-2 Grozenergo	1	gas	1953	25	17
	2	gas	1964	25	17
	3	gas	1957	20	14
	4	gas	1955	30	21
	5	gas	1958	50	34
	6	gas	1958	107	73
	7	-	1960	60	41
Total for the plant				317	217
CHP-3 Grozenergo	1	gas	1966	50	0
	2	gas	1967	50	0
Total for the plant				100	0
CHP-1 Grozenergo	3	gas	1974	9	0
	4	gas	1974	5	0
	6	gas	1976	8	0
	7	gas	1951	20	0
	8	gas	1980	12	0
	9	gas	1983	6	0
Total for the plant				60	0
Total for the RPS				**489**	**217**

DAGENERGO

Machatchkalinskaja CHP	3	gas	1982	6	6
Dagestanskaja CHP					
Replacement	1		1992	6	5
Replacement	2		1993	6	5
Replacement	3		1993	6	6
Total for the plant				18	16
Kajspijskaja CHP	2	gas	1973	6	6
	5	gas	1958	8	8
Total for the plant				14	14
Total for the RPS				**40**	**36**

66

Fossil Plants in North Caucasus

KABARDINO-BALKARENERGO

CHP Nartkala	1		1977	12	3
	2		1977	4	1
Total for the plant				16	4
CHP of the Nalchik	51	gas	1962	6	4
Total for the RPS				**22**	**8**

ROSTOVENERGO

Novocherkassky TPP-1	1	coal	1968	267	206
	2	coal	1966	267	206
	3	coal	1967	277	214
	4	coal	1968	277	214
	5	coal	1969	290	224
	6	coal	1970	290	224
	7	coal	1971	290	224
	8	coal	1972	287	222
Total for the plant				2245	1734
Nesvetay TPP	5	coal	1954	105	86
Kamenskaja CHP	1	coal	1944	10	6
	7	coal	1971	12	6
	8	coal	1984	12	7
Total for the plant				34	19
Volgodonsky CHP - 1	1	oil	1960	6	5
Rostovskaja CHP-2	1	oil	1974	80	68
	2	oil	1974	80	69
Total for the plant				160	137
Volgodonsky CHP - 2	1	gas	1977	60	38
	2	gas	1979	110	69
	3	gas	1980	110	69
	4	gas	1989	140	88
Total for the plant				420	264
Rosselmash CHP	51		1931	6	6
Total for the RPS				**2985**	**2251**

KARACHAI-CHERKESSKENERGO

Erken-Shahar CHP	1	gas	1963	7	7
	2	gas	1963	7	7
Total for the plant				14	14
Total for the RPS				**14**	**14**

KALMYKENERGO

CPP in Elista	1		1995	0	0
Total for the RPS				**0**	**0**

NORTH CAUCASUS UNIT RETIREMENT SCHEDULE FOR THERMAL UNITS

PLANT NAME	Unit Size	Fuel Type	Unit #	Year in Service	Year of Retirement
Krasnodar CHPP (gas turbine)	95	gas	10	1970	1995
GrozEnergo CHPP-2	107	gas	6	1958	1995
GrozEnergo CHPP-2	30	gas	4	1955	1995
GrozEnergo CHPP-2	60	gas	7	1960	1995
GrozEnergo CHPP-2	25	gas	2	1964	1995
GrozEnergo CHPP-2	50	gas	5	1958	1995
GrozEnergo CHPP-1	8	gas	6	1976	1995
GrozEnergo CHPP-1	12	gas	8	1980	1995
GrozEnergo CHPP-1	6	gas	9	1983	1995
Caspian CHPP	8	gas	5	1958	1995
Kislovodsk CHPP	4	gas	2	1958	1995
Kropotkin	6	gas	1	1959	1995
GrozEnergo CHPP-3	50	gas	1	1966	1995
GrozEnergo CHPP-2	20	gas	3	1957	1995
Nesvetai SDPS	105	coal	5	1954	1995
GrozEnergo CHPP-2	25	gas	1	1953	1995
Armavir CHPP	6	gas	2	1958	1995
GrozEnergo CHPP-1	20	gas	7	1951	1995
GrozEnergo CHPP-4	6	gas	2	1962	1995
Kropotkin	4	gas	2	1960	1995
GrozEnergo CHPP-1	9	gas	3	1974	1995
GrozEnergo CHPP-1	5	gas	4	1974	1995
GrozEnergo CHPP-4	6	gas	1	1962	1995
Armavir CHPP	2	gas	1	1959	1995
Rostselmash Enterprise CHPP	6	gas	51	1931	1995
Kamenskaya CHPP	10	coal	1	1944	1995
GrozEnergo CHPP-3	50	gas	2	1967	1995
Subtotal	735				
Krasnodar CHPP (gas turbine)	95	gas	11	1975	1997
Krasnodar CHPP	50	gas	4	1959	1998
Krasnodar CHPP	20	gas	2	1955	2000
Krasnodar CHPP	25	gas	1	1954	2000
Krasnodar CHPP	22	gas	3	1957	2000
Nevinnomysskaya SDPS	25	gas	1	1960	2000

North Caucasus Retirement Schedule

Volgodon CHPP	6	gas	1	1960	2000
Nevinnomysskaya SDPS	25	gas	2	1960	2000
Krasnodar CHPP	42	gas	5	1961	2000
Subtotal	165				
Nevinnomysskaya SDPS	60	gas	3	1961	2001
Nalchik GMZ CHPP	6	gas	51	1962	2002
Krasnodar CHPP	150	gas	6	1963	2003
Krasnodar CHPP	150	gas	7	1963	2003
Erken-Shakar CHPP	7	gas	2	1963	2003
Erken-Shakar CHPP	7	gas	1	1963	2003
Subtotal	314				
Nevinnomysskaya SDPS	150	gas	6	1964	2004
MainopYSKK CHPP	6	gas	2	1964	2004
Krasnodar CHPP	150	gas	8	1964	2004
MainopYSKK CHPP	6	gas	1	1964	2004
Nevinnomysskaya SDPS	150	gas	7	1964	2004
Subtotal	462				
Nevinnomysskaya SDPS	150	gas	8	1965	2005
Total through 2005	**2037**				

UNIT RETIREMENT SCHEDULE - AFTER 2005

PLANT NAME	Unit Size	Fuel Type	Unit #	Year in Service	Year of Retirement
Krasnodar CHPP	160	gas	9	1966	2006
Nevinnomysskaya SDPS	150	gas	9	1966	2006
Novocherkasskaya SDPS	267	coal	2	1966	2006
Novocherkasskaya SDPS	277	coal	3	1967	2007
Nevinnomysskaya SDPS	150	gas	10	1967	2007
Novocherkasskaya SDPS	267	coal	1	1968	2008
Nevinnomysskaya SDPS	50	gas	4	1968	2008
Novocherkasskaya SDPS	277	coal	4	1968	2008
Isolilnen.s.z CHPP	6	gas	2	1968	2008
Isolilnen.s.z CHPP	6	gas	1	1968	2008
Novocherkasskaya SDPS	290	coal	5	1969	2009
Sugar Refineries CHPP	158	gas	51	1970	2010
Nevinnomysskaya SDPS	160	gas	11	1970	2010

North Caucasus Retirement Schedule

Novocherkasskaya SDPS	290	coal	6	1970	2010
Kamenskaya CHPP	12	coal	7	1971	2011
Novocherkasskaya SDPS	290	coal	7	1971	2011
Nevinnomysskaya SDPS	170	gas	12	1972	2012
Novocherkasskaya SDPS	287	coal	8	1972	2012
Nevinnomysskaya SDPS	100	gas	5	1973	2013
Caspian CHPP	6	gas	2	1973	2013
Rostov CHPP-2	80	gas	2	1974	2014
Rostov CHPP-2	80	gas	1	1974	2014
Stavropol SDPS	300	gas	2	1975	2015
Stavropol SDPS	300	gas	1	1975	2015
BLOCKSTATION	14	gas	51	1976	2016
Krasnodar Enterprise CHPP	12	gas	1	1976	2016
Stavropol SDPS	300	gas	4	1976	2016
Stavropol SDPS	300	gas	3	1976	2016
Nartkala CHPP	12	gas	1	1977	2017
Volgodon Plant CHPP	60	gas	1	1977	2017
Nartkala CHPP	4	gas	2	1977	2017
Stavropol SDPS	300	gas	5	1978	2018
Stavropol SDPS	300	gas	6	1979	2019
Volgodon Plant CHPP	110	gas	2	1979	2019
Volgodon Plant CHPP	110	gas	3	1980	2020
Kislovodsk CHPP	6	gas	3	1981	2021
Stavropol SDPS	300	gas	7	1981	2021
Makhachkala CHPP	6	gas	3	1982	2022
Stavropol SDPS	300	gas	8	1983	2023
Kamenskaya CHPP	12	coal	8	1984	2024
Volgodon Plant CHPP	140	gas	4	1989	2029
Krasnodar Enterprise CHPP	12	gas	2	1989	2029
Dagestan CHPP	6	gas	1	1992	2032
Kislovodsk CHPP	6	gas	4	1993	2033
Dagestan CHPP	6	gas	3	1993	2033
Dagestan CHPP	6	gas	2	1993	2033
Total from 2006	**6455**				

71

APPENDIX B

TRANSMISSION DIAGRAMS AND MAPS

The following pages include two maps showing the 220 kV and 500 kV transmission reinforcements considered in this study, and five diagrams illustrating interregional transmission options.

220 kV TRANSMISSION REINFORCEMENT

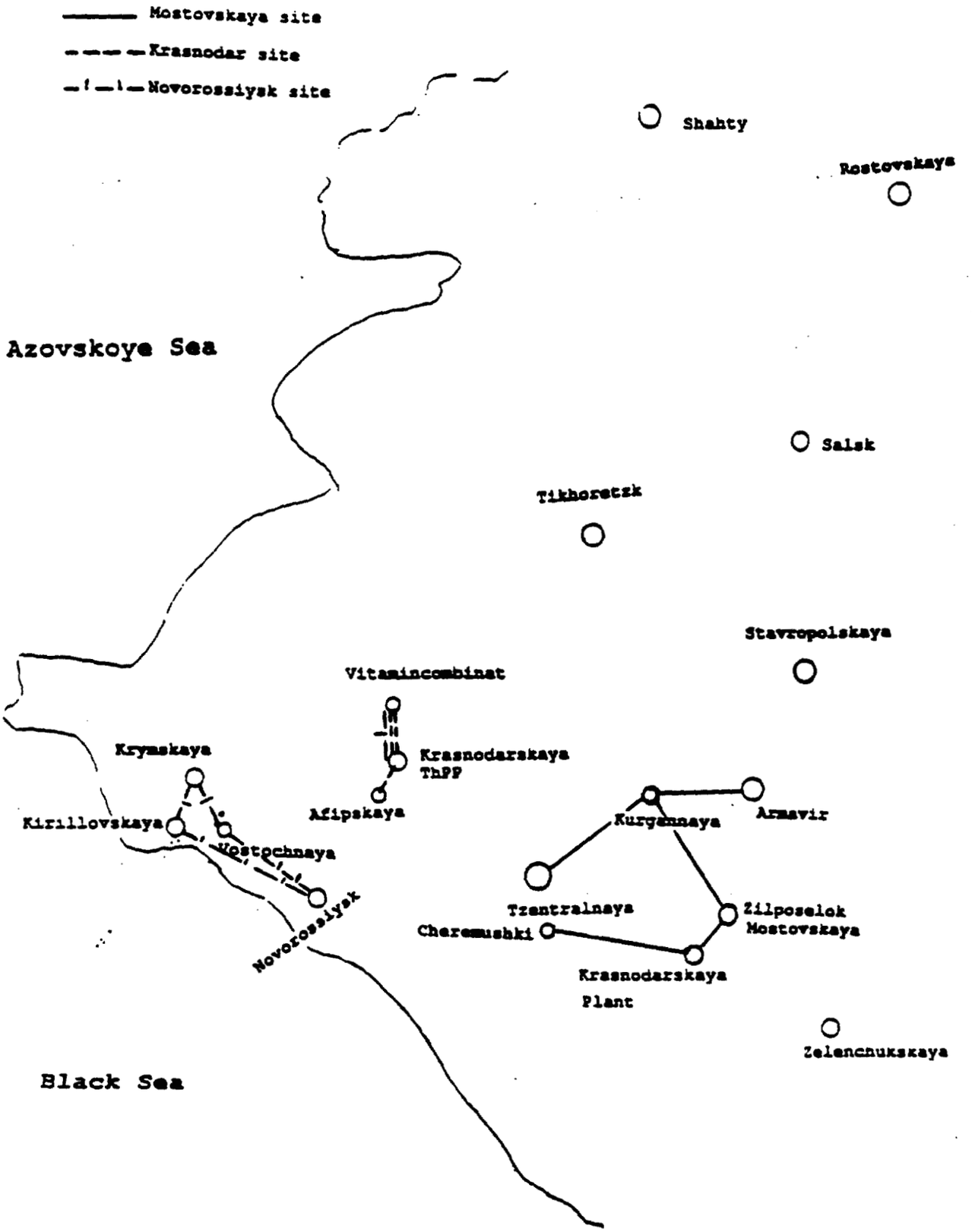

EXISTING 500 kV NETWORK OF NORTH CAUCASUS WITH REINFORCEMENT DUE TO PROJECTS

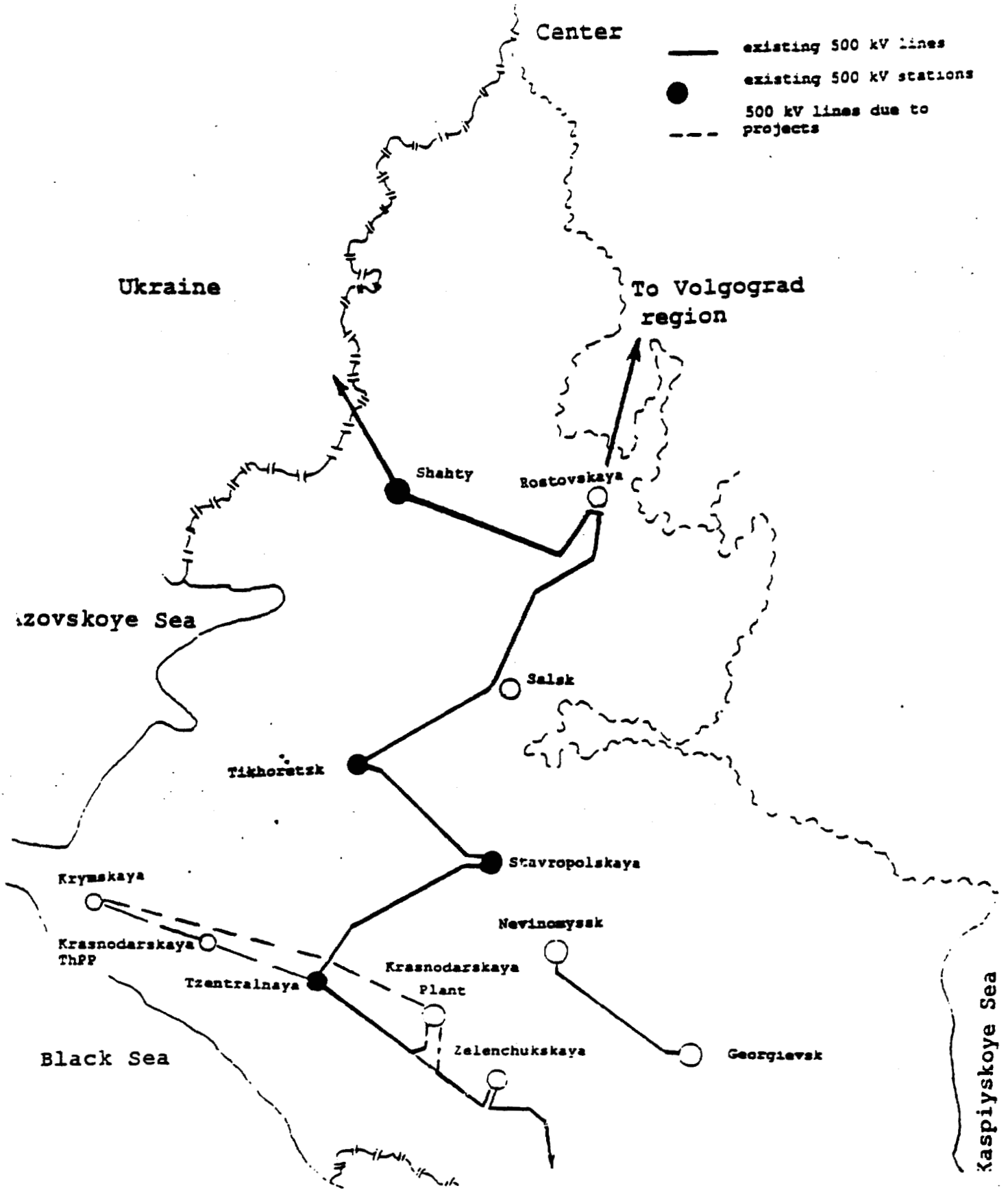

MAXIMUM TRANSFER CAPABILITIES
EXISTING SITUATION

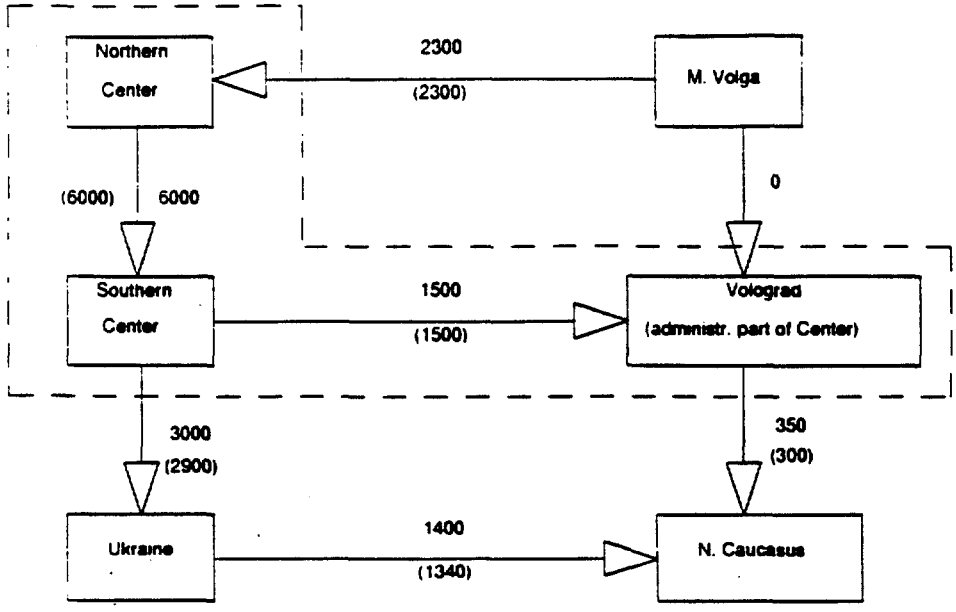

Ptotal to NC<1750 MW
First Contingency Limit 1200 MW

Note: Actual flows at peak load are shown in brackets

MAXIMUM TRANSFER CAPABILITIES
Middle Volga-Center-N. Caucasus Reinforcement (first stage)

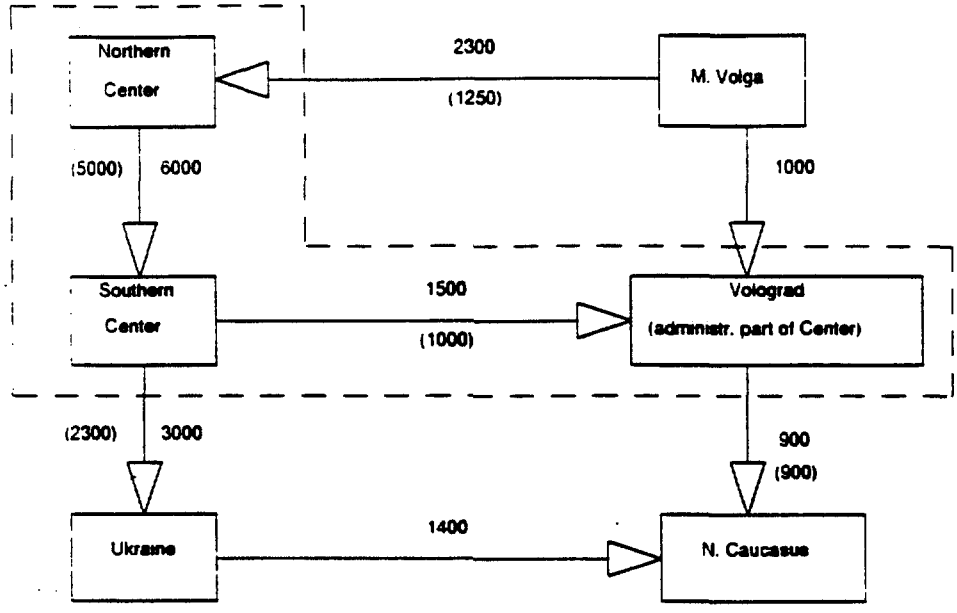

Ptotal to NC < 2300 MW
First Contingency Limit=1500 MW

Note: Actual flows at peak load are shown in brackets

MAXIMUM TRANSFER CAPABILITIES
Middle Volga-Center-North Caucasus Reinforcement (second stage)

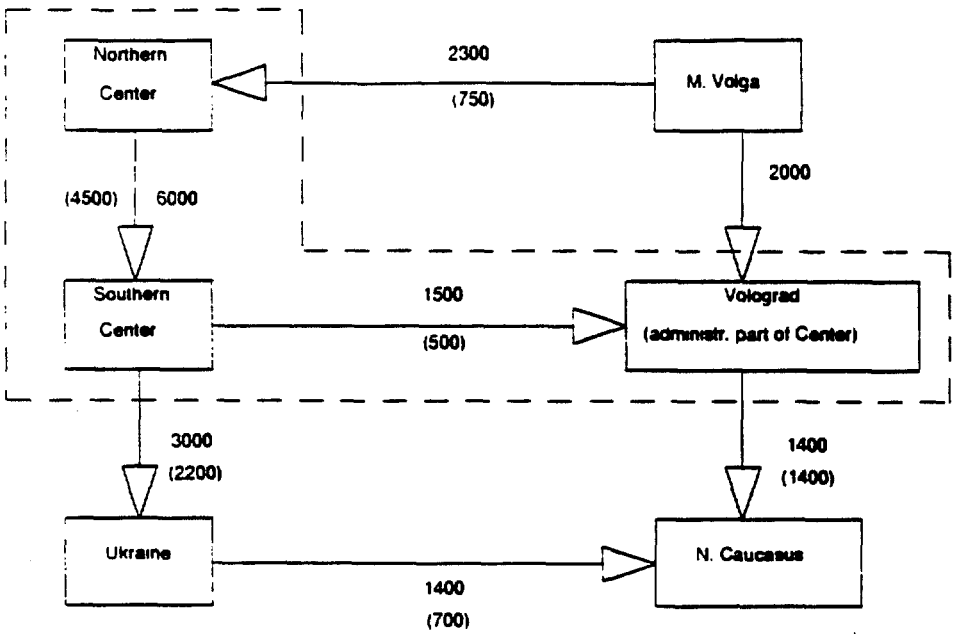

Ptotal to NC < 2800 MW
First Contingency Limit 1750 MW

Note: Actual Flows at Peak Load are shown in brackets

MAXIMUM TRANSFER CAPABILITIES

Volgograd-N.Caucasus Reinforcement Complementary to the first stage of Middle Volga-Center-N. Caucasus Reinforcement

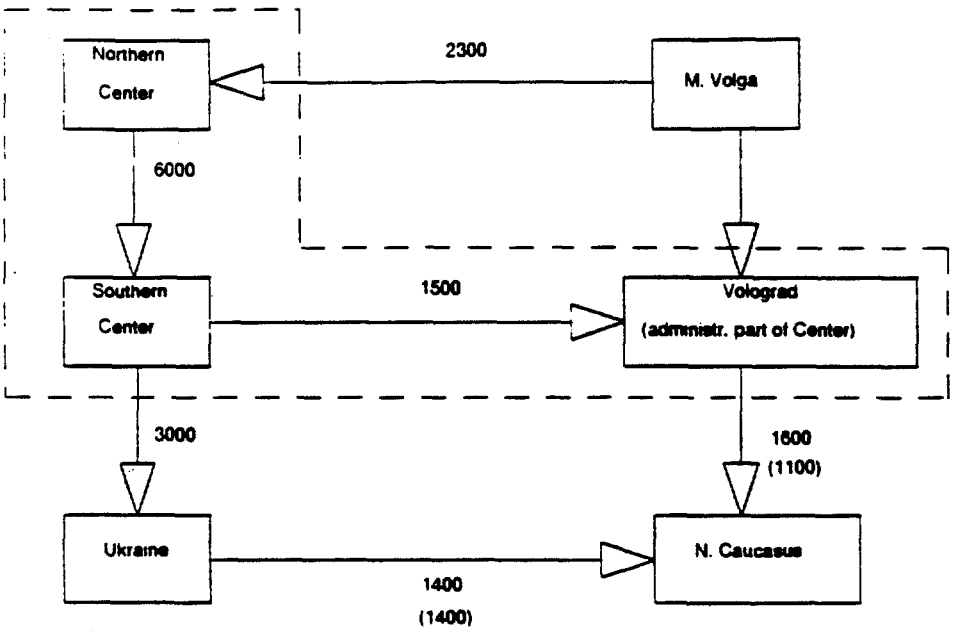

If ties with Ukraine are available: Ptotal to NC<2500MW
First Contingency Limit = 2000MW

If ties with Ukraine are unavailable: Ptotal to NC<1600MW

MAXIMUM TRANSFER CAPABILITIES
Souther Center-N.Caucasus Reinforcement complementary to the first stage of Middle Volga-Center-N.Caucasus Reinforcement

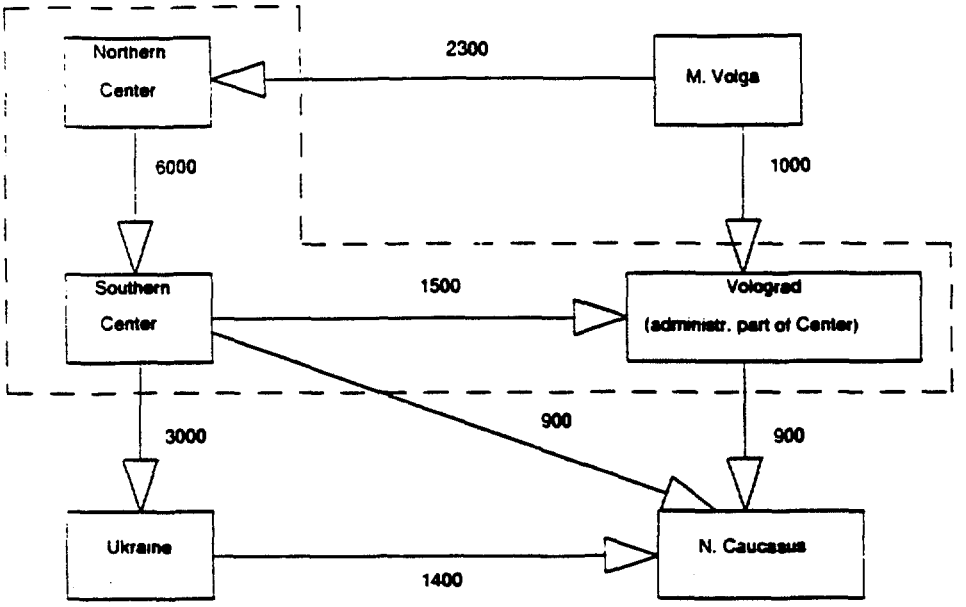

Ties with Ukraine are available: Ptotal to NC<2700MW
First Contingency Limit=2000MW
Ties with Ukraine are unavailable:Ptotal to NC<1500MW

APPENDIX C

ELECTRICITY AND HEAT DEMAND PROJECTIONS FOR KRASNODAR KRAI NORTH CAUCASUS

The report prepared by the Center for Energy Efficiency (CENEf) Moscow, and dated July 21, 1995, is attached under separate cover.

Center for Energy Efficiency
Moscow

ELECTRICITY AND HEAT DEMAND PROJECTIONS FOR KRASNODAR KRAI AND NORTH CAUCASUS

For RCG/Hagler, Bailly, Inc.

July 21, 1995

81

CONTENTS

	p.
Abstract	ii
1. Historical Economic and Energy Data	1
1.1. Macroeconomic Data	1
1.1.1. North Caucasus	1
1.1.2 Krasnodar Krai	3
1.2. Industrial sector	4
1.2.1. Russian Industry in the transition	4
1.2.2. North Caucasus	4
1.2.3. Krasnodar Krai	5
1.3. Residential sector	6
1.3.1. North Caucasus	6
1.3.2. Krasnodar Krai	6
1.4. Energy balance	8
1.4.1. North Caucasus	8
1.4.2. Krasnodar Krai	15
1.5 Energy prices	30
1.6. Quality of North Caucasus and Krasnodar Krai statistical data	34
2. General description of the energy balance model	34
2.1. Complex of models	34
2.2. General description of the regional energy balance model	35
2.3. Model calibration	36
3. Projection scenarios	36
3.1. General assumptions	36
3.2. Economic depression scenario	37
3.2.1. North Caucasus	38
3.2.2. Krasnodar Krai	41
3.3. Economic revival scenario	44
3.3.1. General assumptions	44
3.3.2. North Caucasus	45
3.3.3. Krasnodar Krai	48
Conclusion	52
References	53

ABSTRACT

In the Scope of Work for this Contract CENEf was required to develop one scenario for electricity and heat demand for the North Caucasus UPS and Krasnodar Krai. The base year will be 1993. Yearly demand projections will be developed for each economic sector (total and by consumption sector: industry, transportation, agricultural and residential/commercial) and for each year between 1995 and 2010. CENEf's demand scenarios will incorporate the potential for inter-energy substitutions, particularly for space heating and hot water, e.g. when centralized heat might be displaced by direct fuel use or electricity.

Model simulation of future growth of electricity and heat demand in North Caucasus and Krasnodar Krai shows that electricity demand will go up to 49.9-59.0 bln. kWh in North Caucasus and to 13.0-15.2 billion kWh in Krasnodar Krai in the year 2000 and correspondingly to 58.7 - 74.4 billion kWh and 15.5 - 18.8 billion kWh in 2010. This range of uncertainty allows room for additional generation of local electric power to substitute imported electricity, replace obsolete facilities and satisfy growing demand.

Heat demand will grow up to 72.9-87.0 million Gcal in North Caucasus and 17.4-20.6 million GCal in Krasnodar Krai in the year 2000 and correspondingly 85,5-110.0 million Gcal and 20.9-25.6 Gcal in the year 2010.

Such relatively large range of the projections uncertainty results from the uncertainty with the future economic development as well as from data shortage for the model calibration. It seems that this range covers all trajectories of future electricity and heat demand evolution foreseeable in North Caucasus and Krasnodar Krai for the coming 15 years.

83

ELECTRICITY AND HEAT DEMAND PROJECTIONS

for

NORTH CAUCASUS

and

KRASNODAR KRAI

1. Historical Economic and Energy Data

1.1. Macroeconomic Data

Russia has begun a transition to democracy and a market system. First signs of market economics are beginning to take shape. Economic measures, such as price reform and privatization, resulted in a semiblance of market-type activity. The painful transition process to a market economy is actually a combination of several simultaneous transitions:

- the monopolistic, top-down government is under transformation into a bottom-up system of regional authority and decision-making;
- the centrally planned system must be recast for the economy to develop market-based interactions; emphasis on military production and heavy industry is shifted towards consumer goods and light industry;
- isolationism is giving way to international trade and participation in foreign markets.

It is a challenge to predict the future of any country, especially a country in transition, but in Russia it is even a greater challenge to collect reliable and consistent data necessary for a proper discription of the past.

The process of statistical data collection is also in transition. Russia only recently switched to the National Accounts system. As a result, data for GDP structure became available only since 1990. But for regions GDP data are still unavailable. Energy data for the Federation as well as for regions are still collected according to the standards of the past. However, the statistical discipline is much below the former standards.

When the depth of economic crisis is evaluated, reliability of statistical data must be taken into account. So as to escape heavy taxes significant volumes of production are not statistically reported by enterprises. This turns the clear picture of statistical description of the recent years to misty general images of real objects.

1.1.1. North Caucasus

North Caucasus as a region includes nine so-called subjects of the Russian Federation. Therefore, data collection for North Caucasus (NC) is a more complicated process than that for a separate region like Krasnodar Krai. There are several reasons for that:

- data for North Caucasus (NC) are to be aggregated from the statistical data for nine different regons;
- lack of data on specific indicator for one region does not allow to estimate this index for the whole of NC;
- inconsistency of statistical data taken from different sources for any specific region is aggravated when nine regions are considered;
- there is no NC region administration which requires timely statistical data collection and presentation.

As a result, we have much less detailed historical economic and energy statistical data on NC than on Krasnodar Krai. It was almost impossible to get additional statistical information during the project implementation just due to the shortage of time against the background of time intensity of the data collection and verification task.

One data collection trip to the region was made. But it provided additional information mainly for Krasnodar Krai. For North Caucasus data provided by HBI, Russian Federation statistical offices and those provided by individual experts were used.

Basic macroecomonic indicators for North Caucasus which we managed to collect are shown in the Table 1.

Table 1. North Caucasus General Economic Indicators

	Units	1990	1991	1992	1993	1994
Population	10^3	16890	17030	17246	17292	17518
urban	10^3	9597	9823	9900	9828	9830
rural	10^3	7154	7207	7346	7564	7688
Industrial Production Index*	1990=1 00	100 100	97 97.4	78 77.8	66 58.1	
Fixed Capital Investments	1990=1 00	100	88.5	68	52.6	
Agricultural production	1990=1 00	100			72	
Consumer Price Index**	1990=1	1	2.16	37.24	379.46	1745.7
Average Salary	1990=1	1	1.79	16.28	153.0	

* The upper number was taken from [8] with no specification of the base year, the number below was taken from the VNIIKTEP expert.

** Data for consumer price index is average for the Russian Federation.

Several observations could be made based on the analysis of numbers presented:

- 11.8 percent of Russians are living in the region;
- NC population is growing very rapidly - by 0.9 percent per year against the background of stable Russian population;
- 44 percent of local population lived in rural areas in 1994, in early 90-s rural population grew by 1.8 percent per year;

- NC economy is coming through a very deep ecomonic crisis - industrial production in 1990-1993 declined by 34 percent, and gross fixed capital investments - by 47 percent;
- grain production was relatively stable, some decline in agricultural production was due to the reduction of meat, as well as fruit and vegetables production;
- real incomes of NC population declined substantially, thus limiting the market for many goods and services.

1.1.2. Krasnodar Krai

More than a quarter of NC population are living in Krasnodar Krai. There are different estimates: of Krasnodar Krai population. For 1993 three numbers are prpvided by different sources: 4,940 thousand people for all population living in the region, 4,819 thousand people for permanent population by the end of the year (those two estimates are taken from regional statistics), and 4,879 annual average population (data from the federal statistical source [8]). While population in the Russian Federation was stable in 1990-1994 there was a dynamic growth in Krasnodar Krai - by 1,3 percent per year. In addition to that, the share of rural population is very substantial - about 46 percent and even growing, it grew by 0.4 percent in 1990-1994 - which was a very unusual trend.

Presently, Krasnodar Krai, as well as North Caucasus and the rest of Russia, is a Crisisland (see Table 2):

- industrial production declined by 42 percent;
- capital investments in 1994 were just one third of the 1990 level;
- agricultural production in 1994 was 34 percent below the 1990 level;
- consumer price index grew 1,746-fold, whereas average salaries just 616-fold.

Table 2. Krasnodar Krai General Economic Indicators

	Units	1990	1991	1992	1993	1994
Population	10^3	4680	4738	4797	4879	4940
urban	10^3	2549	2587	2612	2649	2672
rural	10^3	2131	2151	2185	2230	2268
Industrial Production Index*	1990=100	100 100	99 99.5	82 90.8	73 81.1	58 66.4
Fixed Capital Investments	1990=100	100	89	73	81	35
Agricultural production	1990=100	100	89	76	79	66
Index of industrial wholesale prices	1990=1	1	3.72	107.1	1074.8	3467.3
Consumer Price Index**	1990=1	1	2.16	37.24	379.46	1745.7
Average Salary	1990=1	1	1.9	18.8	174.8	616.1

* The upper number was taken from [8] with no specification of the base year, the number below was taken from the Krai statistical office and presents constant 1994 prices.

** Data for consumer price index is average for the Russian Federation.

86

1.2. Industrial sector

1.2.1. Russian Indusry in the Transition

Russian industrial sector is undergoing a very deep crisis: in 1994 the index of industrial production was just half of the 1990 level and two thirds of the 1980 level. Many simultaneous transitions are under way within the sector:

- in 1994 the share of government-owned industrial enterprises declined from 52 to 30 percent, whereas the share of enterprises with mixed property grew from 39 to 61 percent, and the share of private enterprises grew from 7 to 9 percent;
- purchasing power became a number one factor driving the structural changes of Russian industrial sector;
- contribution to overall industrial output of competitive (on international markets) industries grew against the background of diminishing role of machinery and light industry;
- lack of energy and resources conservation technologies is partly responsible for making industrial structure heavier;
- more than 70 percent of enterprises have expired debts.

1.2.2. North Caucasus

Although information on physical indices of industrial output evolution in the region by branches of industry is very limited, some available data are presented in Table 3. This Table illustrates how deep the industrial crisis is, especially in such industries as chemical, light, fuels production and ferrous metals production. Two industries - machinery and food processing - contribute to more than a half of overall industrial production with food alone providing more than one third of the industrial output. Therefore, the NC industry is much less energy intensive compared to many other Russia's regions.

Electricity generation and fuels production are two other major industries, followed by chemical industry and building materials. Lack of data on physical indices expressed in monetary terms to illustrate the structural shifts within the industry was partly overcome by illustrations of producton declines of representative products by industries (See Table 4). The data presented confirm the depth of the economic crisis in the industriasl sector of NC.

Table 3. North Caucasus: Industrial Indicators in 1990-1994

	Share in 1993	1990	1993
Industrial Production	100.0	100	66
Electricity Generation	10.8	100	86
Fuels Production	6.8	100	54
Iron and Steel	3.0	100	58
Non-Ferrous	2.9	100	78
Chemical	7.5	100	41
Machinery	17.5	100	51
Pulp and Paper	3.3	100	63
Building Materials	6.5	100	65
Light	5.4	100	52
Food	34.5	100	64
Other	1.8	100	N/A

87

Table 4. Basic Industrial Production in the North Caucasus

	Units	1990	1993	1994	1994/1990(%)
Electricity	bln.kWh	58.8	51.5	49.1	83.6
Oil	mln.t	8.6	6.1	6.1	70.9
Steel	mln.t	1.32	0.97	0.88	66.7
Metal Cutting Machines	units	6326	1811	1651	26.1
Plastics	th.t	348	230	198	56.9
Sawed Wood	th.m3	1880	753	528	28.1
Reinforced Concrete	mln.m3	6.05	3.09	3.04	50.2
Sugar	th.t	1706	1249	n.a.	73.2*

*) 1993/1990

Source: Data for 1990 and 1993 were taken from [8], 1994 values are VNIIKTEP estimations.

1.2.3. Krasnodar Krai

Because of unequality of price growth by industries the depth of economic crisis in Krasnodar Krai industry measured in constant prices depends on the base year for the industrial output evaluation in constant prices or on the methodology of physical index calculation. By any scale the decline is very substantial.

The structure of the industrial output in Krasnodar Krai differs even more substantially from many other Russian regions than that of the NC with food industry dominance (see Table 5). Energy intensive industries, such as ferrous and non-ferrous metallurgy and chemical industry, all together contributed just 2.1 percent of the total industial output for Krasnodar Krai. Power generation industry ranked second in the list of most important industries followed by building materials, machinery, and fuel extraction industry.

Decline by industries was very uneven: the least decline was in the power sector (6 percent), whereas chemical industry output fell down 5-fold.

Table 5. Krasnodar Krai: Industrial Indicators in 1990-1994

	Share in 1994	1990	1991	1992	1993	1994
Industrial Production	100.0	100	99	82	73	58
Electricity Generation		100	101	97	93	94
Fuels Production	7.8	100	113	90	93	89
Iron and Steel	0.1	100	107	61	46	35
Non-Ferrous	0.0	100	107	61	30	20
Chemical	2.0	100	72	48	33	20
Machinery	9.2	100	90	75	57	22
Pulp and Paper	4.0	100	104	89	74	36
Building Materials	9.5	100	97	78	64	51
Light	3.4	100	108	72	62	33
Food	41.3	100	86	71	64	52
Other	7.0	100	93	82	73	58

88

1.3. Residential Sector

1.3.1. North Caucasus

Major characteristics of NC building stock are shown in Table 6. Analysis of data presented shows the following:

- saturation of living area per capita in NC is close to the average number for the Russian Federation;
- in 1990-1994 there was a minor improvement in living conditions of NC population;
- construction of new houses declined by 41 percent in 1990-1993;
- 51 percent of population are living in single, or two-three families private houses;
- 41 percent of tenants live in apartments;
- the share of 5-storeyed and higher-rise houses is very limited - less than 1 percent;
- a substantial part of houses were private even before the economic reforms started, and presently 73 percent of dwellings are private;
- given more than 50 percent of people living in private single-family houses, price elasticity of energy demand in this sector should be above average for the Russian Federation;
- district heating is provided to 44 percent of dwellings;
- hot water is supplied to 30 percent of all dwellings;
- natural gas is supplied to 76 percent of dwellings;
- on floor electric ranges are available only for 2 percent of dwellings.

Table 6. North Caucasus: Major Characteristics of Residential Sector

	Units	1990	1993	1994
Population	10^3	16890	17292	17518
Living area/cap	m^2	16.1	16.2	16.4
Living area	$10^6 m^2$	235	276	282
New construction	$10^6 m^2$	6.102	3.65	N/A
Share of 5-storeyed and higher houses	%			0.6
Characteristics of urban building stock				
water supply	%	na	55	57
canalization	%	na	45	48
central heating	%	na	41	44
hot water	%	na	30	30
gas	%	na	76	76
electric range	%	na	2	2

1.3.2. Krasnodar Krai

A high share of rural population predetermines the dominance of private houses in the residential sector - a very unusual situation for Russia's regions. Major characteristics of this sector are shown in Table 7. Analysis of data presented shows:

- statistical saturation of living area per capita in Krasnodar Krai is not far from the average for NC and the Russian Federation, but there are some differences in various sources on this index;
- in 1990-1994 living conditions of Krasnodar Krai population did not improve;
- construction of new houses declined, but not as much as other ecomonic activities;
- percent of Krasnodar Krai population live in private houses;
- less than forty percent of tenants live in apartments;
- the share of 5-storeyed and higher houses is very limited - less than 1 percent;
- presently about three forths of dwellings are private;
- district heating is provided to 68 percent of urban dwellings and to about 40 percent of all dwellings;
- hot water is supplied to 48 percent of urban dwellings and to 29 percent of all dwellings;
- on floor electric ranges are available only for 4 percent of urban dwellings and there is substantial room for electricity to substitute natural gas. Many families have on-table electric ranges. We have no data on saturation of these devices, but we can estimate that 26 percent of families use electric devices either on-floor or on-table. The crucial factor in competition between gas and electricity will be relative energy prices.

Table 7. Krasnodar Krai: Major Characteristics of Residential Sector

	Units	1990	1991	1992	1993	1994
Population	10^3	4680	4738	4797	4879	4940
Living area/cap	m^2	16.3	16.0	16.2	16.4	16.4
Living area	$10^6 m^2$	76.3	75.8	77.7	80.0	80.8
New construction	$10^6 m^2$	1.49	1.21	1.0	1.2	1.2
Heating	%	100	100	100	100	100
fuel	%	65	59	56	56	54
district heating	%	30	36	39	39	41
electricity	%	5	5	5	5	5
Hot water	%	100	100	100	100	100
fuel	%	64	64	64	61	61
district heating	%	26	26	26	29	29
electricity	%	10	10	10	10	10
Cooking	%	100	100	100	100	100
fuel	%	74	74	74	74	74
electricity	%	26	26	26	26	26
Private dwellings	%	62	63	66	73	73
urban	%	44	45	47	56	56
rural	%	80	81	86	92	92
Share of 5-storeyed and higher houses	%					0.6
Characteristics of urban building stock						
water supply	%	69	70	69	70	69
canalization	%	59	65	66	65	66
control heating	%	59	56	67	68	68
hot water	%	42	48	48	48	48
gas	%	67	75	75	75	75
electric range	%	4	4	4	4	4

1.4. Energy Balance

1.4.1. North Caucasus

The task requires to determine electricity and heat demand for major energy consuming sectors, with incorporation for inter-energy substitution considerations. To implement this task energy balance for the regions were reconstructed from all sources of information available for CENEf. This balance is presented in Table 8.

North Caucasus energy statistics in 1994 is neither complete nor reliable. Data availability for North Caucasus which is agreggated data by regions always lagged comparing with separate regions. Lack of data for Chechnya since 1993 is an additional problem. This is why 1993 values were used as a base year in our calculations for NC.

Substantial additional data collection is requred to improve the quality of the results.

Data presented in Table 8 allows to specify several important observations:

- NC is net importer of energy. It is self-sufficient only as far as coal is concerned and even exports this energy resource, but substantially depends on natural gas export (in 1994 local gas production covered only 15 percent of local consumption), gasoline (49%), diesel fuel (59%), mazut (70%), electricity (93%);
- growth of primary energy consumption (PEC) in 1985-1990 was very moderate - just 5%;
- in 1990-1993 PEC decline (19%) was below that in overall economic activity (about 34%);
- by energy consumption sector this decline was distributed in the following way (in brackets there is the share of the sector in final energy consumption in 1990):
  - * industry and construction -33% (25%)
  - * agriculture +1.5% (11%)
  - * transport -28% (16%)
  - * residential and commercial -5.4% (38%)
  - * other -38% (9%);
- growth in agricultural sector and very small decline in residential and commercial sectors as well as in the energy sector itself prevented PEC from deeper reduction.

- NC has a very unusual for Russia structure of final energy consumption by sectors - residential and commertial sector dominates over industrial one;

The structure of final energy consumption by fuels in 1990 was as follows (in brackets there are data for 1993):

* coal	7.1%	(6.9%)
* gas	30.2%	(28.8%)
* petroleum products	28.4.0%	(28.2%)
* electricity	10.8%	(11.8%)
* district heating	23.6%	(24.3%)

Table 8 . North Caucasus Energy Balance th.tce

	Year	Coal	Gas	Gasoline	Diesel Fuel	Mazut	Other oil pr	Hydro	Electricity	Heat	Total
INDIGENOUS PRODUCTION	1985	21177.1	8659.5	5544.3	6172.7	10803.8		560.6			52918.0
	1990	19611.5	6402.1	4601.1	8555.0	7809.0		894.5			47873.2
	1991	13164.8	6129.5	4733.7	8004.7	8831.0		749.1			41612.9
	1992	12622.0	5876.5	4288.2	5827.6	7124.0		744.0			36482.3
	1993	12079.1	5405.0	2696.9	5075.0	4726.5		847.3			30829.8
	1994	10450.4	5175.0	2294.6	2856.5	4041.5		735.5			25553.6
IMPORTS:	1985	1884.5	44664.9	5776.7	7337.0	8015.9			1121.9		68800.8
	1990	339.3	69844.1	5691.8	4654.5				926.2		81455.9
	1991			1759.7	3921.8				5494.0		11175.5
	1992			1400.6	1596.5				484.7		3481.7
	1993			1095.2	1203.5				4366.1		6664.7
	1994			2373.6	1986.5				158.7		4518.7
EXPORTS:	1985	14254.4	11350.5	5332.7	3523.5	4944.3			412.5		39818.0
	1990	10253.4	22375.6	3576.0	5626.0				373.6		42204.6
	1991				4386.5				4752.7		9139.3
	1992										
	1993								3869.3		3869.3
	1994										
Saldo	1985										
	1990					1644.0					1644.0
	1991	-6060.4	35037.1			1033.0					30009.6
	1992	-5198.4	32901.5			959.0					28662.1
	1993	-4851.7	30524.5			2561.9					28234.7
	1994	-3485.1	28733.9			1749.5					26998.3
STOCK CHANGES	1985	1128.5	-9936.0	-59.6	30.5	-164.4					-9001.0
	1990	-2455.9	-9671.5								-12127.4
	1991		n.a.								
	1992		n.a.								
	1993		n.a.								
	1994		n.a.								
TOTAL PRIMARY ENERGY SUPPLY	1985	9935.7	32037.9	5928.7	10016.6	13711.0		560.6	709.3		72899.7
	1990	7241.6	44199.1	6716.9	7583.5	9453.0		894.5	552.6		76641.1
	1991	7104.4	41166.6	6493.4	7540.0	9864.0		749.1	741.3		73658.8
	1992	7423.6	38778.0	5688.8	7424.0	8083.0		744.0	484.7		68626.1
	1993	7227.4	35929.5	3792.1	6278.5	7288.4		847.3	496.7		61859.9
	1994	6965.3	33908.9	4668.2	4843.0	5791.0		735.5	158.7		57070.6

	Year	Coal	Gas	Gasoline	Diesel Fuel	Mazut	Other oil pr	Hydro	Electricity	Heat	Total
ELECTR. GENERATION	1985	-2911.8	-4448.3	-3.0	-269.8	-7501.2		-560.6	6287.4		-9407.3
	1990	-3179.6	-9171.6	-3.0	-59.5	-3924.8		-894.5	7227.0		-10005.9
	1991	-2960.2	-8014.8		-105.9	-4305.7		-749.1	7041.0		-9094.6
	1992	-3487.4	-8098.8		-78.3	-3572.3		-744.0	6707.1		-9273.8
	1993	-3407.4	-7692.0		-64.7	-3486.4		-850.2	6334.9		-9165.8
	1994	-3364.7	-7022.0		-47.8	-3101.3		-735.5	6042.7		-8228.6
CHP Plants	1985	-509.0	-2498.0		-13.0	-2234.0				4335.5	-918.5
	1990	-231.0	-3958.0			-925.0				4226.1	-887.9
	1991	-198.0	-3928.0			-914.0				4107.0	-933.0
	1992	-169.6	-3334.5			-907.6				3572.1	-839.6
	1993	-79.2	-3118.0		-0.6	-720.9				3174.6	-744.1
	1994	-69.0	-2983.0		-1.5	-299.0				2978.4	-374.1
DISTRICT HEATING	1985	-534.1	-7840.7	-1.5	-103.0	-1308.4				8800.4	-987.2
	1990	-389.5	-9225.3	-1.5	-33.4	-1190.5				10145.9	-694.3
	1991	-348.8	-8589.4		-78.3	-1124.8				9532.8	-608.5
	1992	-302.0	-8092.0		-45.0	-697.3				8587.9	-548.4
	1993	-281.6	-8103.4		-31.9	-738.4				8629.9	-525.4
	1994	-270.1	-8000.0		-27.6	-500.1					-8797.7
Waste Heat Recovery Units	1985									575.6	575.6
	1990									384.1	384.1
	1991									332.8	332.8
	1992									290.1	290.1
	1993									264.7	264.7
	1994										
OWN USE & LOSSES	1985	-100.0	-2019.4	-23.8		-12.3			-1246.1	-247.4	-3649.1
	1990	-100.0	-3186.7	-26.8		-5.5			-1294.6	-204.8	-4818.3
	1991	-100.0	-2973.9	-25.3		-5.5			-1248.9	-190.2	-4543.8
	1992	-100.0	-2870.4	-23.8		-4.1			-1219.8	-182.3	-4400.5
	1993	-100.0	-2916.4	-20.9		-4.1			-1192.2	-170.2	-4403.8
	1994	-100.0	-2842.8	-16.4					-1057.3		-4016.5

	Year	Coal	Gas	Gasoline	Diesel Fuel	Mazut	Other oil pr	Hydro	Electricity	Heat	Total
TOTAL FINAL CONSUMPTION	1985	5880.7	14367.0	5840.8	9630.9	2655.1			5892.0	13464.0	57730.5
	1990	4398.0	18657.6	6784.0	7215.2	3514.1			6653.2	14551.3	61773.3
	1991	3497.5	17660.6	6468.1	7357.3	3514.1			6695.3	13782.3	58975.1
	1992	3364.5	16381.8	5665.0	7300.8	2901.7			6097.6	12267.8	53979.0
	1993	3359.1	14100.2	5261.2	6181.4	2338.6			5756.2	11899.0	48895.6
	1994	3161.6	13241.1	4651.8	4766.2	1890.1			5144.1		32854.8
INDUSTRY TOTAL	1985	358.3	4666.7	156.5	683.0	1041.2			2815.3	8239.7	17960.5
	1990	227.3	5121.0	120.7	532.2	783.6			3085.1	8186.3	18056.2
	1991	182.5	4478.1	105.8	510.4	634.3			2979.6	7681.2	16572.0
	1992	135.0	3640.9	93.9	411.8	474.0			2581.8	6775.9	14113.4
	1993	117.4	2628.9	79.0	314.7	474.0			2207.9	6286.0	12107.8
	1994	90.3	2214.9	46.2	262.5	379.5			2161.2		5154.5
uel	1985	14.3	575.0	1.5	1.5	268.5			457.4	1122.6	2440.7
	1990	4.1	694.6	4.5	17.4	239.8			441.2	966.4	2367.8
	1991	3.4	668.2		14.5	169.9			400.4	963.8	2220.1
	1992	2.0	626.8			93.2			361.6	892.3	1975.9
	1993	1.4	372.6			60.3			281.4	829.4	1545.0
	1994	0.7	350.8			34.3					385.7
Iron & Steel	1985		509.5	1.5	4.4	132.9			67.6	115.8	831.6
	1990		537.1	1.5	7.3	109.6			77.1	146.0	878.5
	1991		527.9		7.3	101.4			72.5	128.1	837.1
	1992		331.2			89.1			68.2	104.4	592.9
	1993		254.2			87.7			55.0	85.2	482.0
	1994		210.5			82.2					292.7
Non-Ferrous Metals	1985		128.8	3.0	8.7	1.4			265.8	164.5	572.1
	1990		112.7		11.6				272.5	166.5	563.2
	1991		107.0		11.6				296.4	150.9	565.8
	1992		96.6						210.1	107.3	414.0
	1993		89.7						196.4	90.7	376.7
	1994		79.4								79.4

	Year	Coal	Gas	Gasoline	Diesel Fuel	Mazut	Other oil pr	Hydro	Electricity	Heat	Total
Chemical and Petrochemical	1985	0.7	435.9	1.5	1.5	126.0			452.6	2047.8	3065.9
	1990	0.7	294.4			116.5			501.6	1924.8	2837.9
	1991	0.7	250.7			94.5			472.6	1826.1	2644.7
	1992	0.7	208.2			69.9			382.4	1544.4	2205.5
	1993	0.7	131.1			90.4			315.4	1472.9	2010.5
	1994	0.7	95.5			78.1					174.2
Machinery	1985	16.3	456.6	10.4	16.0	20.6			541.5	1430.0	2491.3
	1990	5.4	426.7	17.9	8.7	34.3			609.9	1483.1	2585.9
	1991	3.4	370.3		7.3	24.7			573.7	1387.1	2366.4
	1992	2.0	328.9			20.6			530.7	1172.6	2054.8
	1993	2.0	256.5			17.8			446.1	1008.2	1730.5
	1994	1.4	202.4			13.7					217.5
Wood, Paper, Pulp & Printing	1985		39.7	3.0	14.5	9.6			64.8	348.9	480.4
	1990		69.0	3.0	8.7	8.2			73.4	341.2	503.5
	1991		62.1		7.3	5.5			68.6	330.3	473.7
	1992		52.9			4.1			60.3	306.0	423.3
	1993		44.9			4.1			49.2	277.4	375.6
	1994		34.5			2.7					37.2
Constructive Materials	1985	219.2	2072.3	10.4	52.2	397.3			247.8	772.2	3771.4
	1990	165.6	2248.3	4.5	26.1	197.3			262.2	788.9	3692.8
	1991	133.0	1867.6		20.3	165.8			245.3	724.3	3156.2
	1992	99.1	1427.2			131.5			207.9	659.1	2524.7
	1993	85.5	976.4			142.5			175.5	600.6	1980.4
	1994	65.1	790.1			113.7					968.9
Construction	1985	13.6	32.2	114.7	403.1	21.9			141.4	171.6	898.5
	1990	4.1	42.6	89.4	288.6	20.6			168.2	145.9	759.2
	1991	4.1	40.3	80.5	277.0	21.9			161.9	141.7	727.2
	1992	3.4	38.0	73.0	221.9	19.2			125.7	135.0	616.0
	1993	2.7	34.5	62.6	172.6	16.4			107.0	128.4	524.2
	1994	1.4	32.2	35.8	139.2	12.3			87.2		308.1

	Year	Coal	Gas	Gasoline	Diesel Fuel	Mazut	Other oil pr	Hydro	Electricity	Heat	Total
extile & Leather	1985	6.8	10.4	1.5	2.9				132.8	307.5	461.7
	1990		5.8						133.4	345.5	484.6
	1991		5.8						130.4	307.5	443.6
	1992		4.6						91.5	293.3	389.3
	1993		3.5						76.0	191.6	271.1
	1994		2.3								2.3
ood and Tobacco	1985	82.1	247.8	6.0	165.3	54.8			237.7	1568.7	2362.4
	1990	46.1	378.4		162.4	52.1			275.5	1704.7	2619.1
	1991	37.3	343.9		163.9	46.6			264.6	1550.1	2406.3
	1992	27.8	301.3			42.5			241.5	1397.1	2010.3
	1993	25.1	258.8			52.1			218.4	1458.6	2012.9
	1994	21.0	240.4			41.1					302.5
ther	1985	5.4	158.7	3.0	13.1	8.2			206.0	190.2	584.6
	1990	1.4	311.7		1.5	5.5			270.0	173.5	763.4
	1991	0.7	234.6		1.5	4.1			293.3	171.3	705.4
	1992		225.4			4.1			301.9	164.5	695.9
	1993		207.0			2.7			287.6	143.0	640.4
	1994		177.1			1.4					178.5
ANSPORT	1985	40.7	1.2	4872.3	2940.6	1097.4			610.1	195.9	9758.1
	1990	17.6	2.3	5039.2	4068.7	1075.5			596.9	264.6	11064.7
	1991	14.3	4.6	4611.6	4106.4	1102.9			538.5	259.5	10637.7
	1992	11.5	4.6	3818.9	3655.5	1082.3			466.3	256.0	9295.0
	1993	9.5	4.6	3440.4	3103.0	757.6			452.4	236.0	8003.4
	1994	6.1	3.5	3219.9	2916.0	561.7			441.1		7148.2

	Year	Coal	Gas	Gasoline	Diesel Fuel	Mazut	Other oil pr	Hydro	Electricity	Heat	Total
Agriculture	1985	122.1	213.9	327.8	2702.8	49.3			898.4	637.8	4952.2
	1990	51.6	120.8	309.9	2291.0	1085.0			981.8	623.5	5463.5
	1991	40.0	131.1	424.7	2398.3	1109.7			1058.4	609.2	5771.3
	1992	33.9	143.8	448.5	2717.3	1041.2			1135.0	584.9	6104.5
	1993	27.8	161.0	439.6	2402.7	835.7			1113.5	566.3	5546.5
	1994	19.0	143.8	403.8	1403.6	753.5			834.8		3558.5
Resid/Comm. & Public Services	1985	4434.0	6238.8	417.2	274.1	223.3			1426.8	3956.8	16970.9
	1990	3961.7	7642.9	1192.0	136.3	128.8			1821.2	4756.2	19639.0
	1991	3183.3	7824.6	1215.8	146.5	258.9			1957.0	4573.1	19159.3
	1992	3128.3	7797.0	1253.1	342.2	243.9			1788.9	4062.6	18616.0
	1993	3150.1	7544.0	1209.9	229.1	201.4			1875.5	4360.4	18570.3
	1994	3019.8	7464.7	905.9	121.8	147.4			1707.0		13366.5
Non-specified sectors	1985	833.3	138.0	67.1	3030.5	48.0				433.9	4550.7
	1990	71.3	124.2	122.2	187.1	53.4				720.7	1278.8
	1991	27.1	104.7	110.3	195.8	30.1				659.2	1127.2
	1992	21.0	92.0	50.7	174.0	16.4				588.4	942.6
	1993	30.5	81.7	92.4	132.0	28.8				450.5	815.7
	1994	13.6	79.4	76.0	62.4	19.2					250.4
NON-ENERGY USE	1985	92.3	3108.5			195.9					3396.7
	1990	68.5	5646.5			387.7					6102.7
	1991	50.2	5117.5			378.1					5545.8
	1992	34.6	4704.0			43.8					4782.4
	1993	23.8	3680.0			41.1					3744.9
	1994	12.9	3335.0			28.8					3376.7

Energy production in NC in recent years is declining by all energy carriers (see Table 9). Electricity production declined in 1990-1994 by 16 percent, heat generation - by 18% (in 1990-1993), mazut production - by 48%, diesel fuel by 67%, gasoline - by 50%, coal - by 47%, oil production by 56%, natural gas - by 19%.

Specific balances for electricity and heat are presented in Tables 10 and 11.

Electricity consumption fell down by 20% in 1990-1994. By sectors in 1994 (in brackets numbers for 1990) it is distributed in the following way (in percent):

- industry 33.5 (37.5);
- construction 1.4 (2.2);
- agriculture 13.5 (12.6);
- transport 7.1 (7.7);
- residential and commercial 27.5 (23.4);
- own use 5.0 (4.8);
- losses 12.0 (11.8).

Major decline in electricity consumption was caused by construction (48%) and industrial (28%) sectors followed by transport (26%), agriculture (15%), and residential and commercial (6%).

Industrial sector dominates heat consumption. Its share declined from 54.5% in 1990 to 51% in 1993, but is still very high. Oveall heat consumption in 1985-1990 grew by 7.6 percent, but then declined by 18 percent in 1990-1993. Decline in the industrial sector was the major driving force for overall heat consumption decline. Against this background the volume of heat consumption in the second largest heat consuming sector -residential and commercial - grew by 7 percent.

Substantial additional data collection should be done to improve the quality of the data presented for North Caucasus.

1.4.2. Krasnodar Krai

Data presented in Table 12 allows to specify several important observations:

- there was no substantial primary energy consumption PEC growth in Krasnodar Krai in 1985-1990 (only 1.6%);
- in 1990-1994 PEC decline (17%) was much below that in overall economic activity;
- by energy consumption sector this decline was distributed in the following way (in brackets there is the share of the sector in final energy consumption in 1990):
  - * industry and construction 38% (29%)
  - * agriculture 23% (7%)
  - * transport 27% (28%)
  - * residential and commercial 2% (30%)
  - * other 56% (6%);
- very small decline in residential and commercial sectors and in energy sector itself prevented PEC from deeper reduction.

98

Table 9. Energy production in the North Caucasus Region

	1985	1990	1991	1992	1993	1994
Electricity, mln.kWth	51117	58756	57243.9	54529	51503	49128
of which hydro	4558	7272	6090	6049	6889	5980
Heat, mln.Gcal	95.884	103.189	97.71	87.064	84.4	n.a.
Oil and Gas Condensate, mln.t	10.807	8.628	7.93	7.057	6.1	3.8
Mazut, th.t	7886	5700	6446	5200	3450	2950
Diesel Fuel, th.t	4257	5900	5521	4019	3500	1970
Gasoline, th.t	3721	3098	3177	2878	1810	1540
Coal, th.t	31.207	28.9	19.4	18.6	17.8	15.4
Natural Gas, bln.m3	7.53	5.567	5.33	5.11	4.7	4.5

Table 10. Electricity Consumption in the North Caucasus Region

mln.kWth

	1975	1980	1985	1990	1991	1992	1993	1994
Total Consumption	39124.5	49195.9	56884.4	63248.3	63270.9	58469.5	55621.5	50418
1. Industry	16554	19403.9	21739.4	23714.4	22908.2	19968.7	17080.8	16862
Fuel Industry	2731.6	3635.2	3718.7	3586.7	3255.2	2939.8	2287.6	
Ferrous metalurgy	476.2	518.1	549.5	627.2	589.6	554.7	446.8	
Non-ferrous metalurgy	1887.2	1970.9	2160.8	2215.4	2410	1708.3	1596.6	
Chemical and perochemical	3007	3148.3	3680	4078.3	3842.6	3108.6	2564.2	
Machinery	3188.1	3864.3	4402.6	4958.8	4664	4315	3626.5	
Wood, Pulp and Paper	483.7	490.3	526.7	597	557.6	490.2	400	
Building materials	1647.7	1791.3	2014.3	2131.5	1994	1690.3	1426.9	
Light industry	893	1035	1079.4	1084.6	1060	743.5	618.2	
Food industry	1554.2	1656.1	1932.2	2239.5	2151	1963.8	1775.6	
other industry	685.3	1294.4	1675.2	2195.4	2384.2	2454.5	2338.4	
2. Construction	739.8	1259.7	1149.5	1367.8	1315.9	1021.6	869.7	709
3. Agriculture	4168	5937.6	7304.3	7982	8604.7	9227.4	9052.5	6787.3
4. Transport	3341.1	4330.3	4960	4852.7	4378.1	3790.7	3677.7	3586
5. Residential and commercial	7618.8	10188.5	11600.2	14806.5	15910.6	14543.8	15248	13877.7
Total final consumption	32421.7	41120	46753.4	52723.4	53117.5	48552.2	45928.7	41822
Power sector - own use	2189.3	2519.9	2880	3041.6	3063.1	2986.4	2751.3	2517
Electricity losses	4513.5	5556	7251	7483.3	7090.3	6930.9	6941.5	6079

Table 11 . Heat Consumption in the North Caucasus Region

th.Gcal

	1985	1990	1991	1992	1993	1994
Generation						
CHP Plants	30318	29553	28720	24980	22200	20828
District Heating	61541	70950	66663	60055	60349	n.a.
Waste Heat Recovery Units	3991	2650	2300	2010	1840	n.a.
Electric Boilers and Others	34	36	27	19	11	n.a.
Total	95884	103189	97710	87064	84400	n.a.
Consumption						n.a.
1. Industry	56420	56227	52724	46440	43060	n.a.
Fuel Industry	7850	6758	6740	6240	5800	n.a.
Ferrous metalurgy	810	1021	896	730	596	n.a.
Non-ferrous metalurgy	1150	1164	1055	750	634	n.a.
Chemical and perochemical	14320	13460	12770	10800	10300	n.a.
Machinery	10000	10371	9700	8200	7050	n.a.
Wood, Pulp and Paper	2440	2386	2310	2140	1940	n.a.
Building materials	5400	5517	5065	4609	4200	n.a.
Light industry	2150	2416	2150	2051	1340	n.a.
Food industry	10970	11921	10840	9770	10200	n.a.
other industry	1330	1213	1198	1150	1000	n.a.
2. Agriculture	4460	4360	4260	4090	3960	n.a.
3. Transport	1370	1850	1815	1790	1650	n.a.
4. Construction	1200	1020	991	944	898	n.a.
5. Other	3034	5040	4610	4115	3150	n.a.
6.Residential and commercial	27670	33260	31980	28410	30492	n.a.
Total final consumption	94154	101757	96380	85789	83210	n.a.
Losses	1730	1432	1330	1275	1190	n.a.
Total Consumption	95884	103189	97710	87064	84400	n.a.

Table 12. Krasnodarsky Krai Energy Balance th.tce

	Year	Coal	Gas	Gasoline	Diesel Fuel	Mazut	Other oil pr	Hydro	Electricity	Heat	Total
INDIGENOUS PRODUCTION	1985		3416.6	1633.0	1053.4	1911.7	672.1	60.8			8747.6
	1990		2472.7	917.8	2005.5	1692.6	735.7	52.2			7876.6
	1991		2188.8	438.1	740.5	323.3	385.0	45.4			4121.1
	1992		1618.8	397.8	675.0	298.0	243.0	61.5			3294.1
	1993		1981.3	289.1	515.5	645.2	241.9	47.4			3720.4
	1994		1938.0	253.3	461.9	336.7	230.0	41.2			3261.1
IMPORTS:	1985	1403.3	13151.0	4367.2	5226.9	1835.7	660.0				26644.2
	1990	1016.5	7939.0	3985.8	3868.0	2130.7	1025.0		1958.8		21923.8
	1991	944.6	7615.2	1941.5	1583.9	2293.1	578.0		1922.4		16878.7
	1992	787.2	8971.8	1732.9	1673.3	2090.5	541.0		1635.1		17431.7
	1993	668.4	7822.7	1573.4	1376.8	1378.0	384.0		1514.7		14718.0
	1994	536.1	7638.0	1564.5	1266.5	1423.4	125.0		843.0		13396.5
EXPORTS:	1985		8224.0	3704.1	3301.8	165.4	183.0				15578.3
	1990		943.9	2494.3	3242.2	1054.9	718.0		663.8		9117.2
	1991						77.0		749.9		826.9
	1992						51.0		569.3		620.3
	1993						54.3		449.6		503.9
	1994						64.8				64.8
Saldo	1985								1242.2		1242.2
	1990										
	1991										
	1992										
	1993										
	1994										
STOCK CHANGES	1985	82.8	-452.6	-93.9	28.3	-117.7					-553.1
	1990	11.5		56.6	-101.3	64.1					30.9
	1991										
	1992										
	1993										
	1994										
TOTAL PRIMARY ENERGY SUPPLY	1985	1486.1	7891.1	2202.2	3006.8	3464.3	1149.1	60.8	1242.2		20502.5
	1990	1028.1	9467.7	2466.0	2530.0	2832.5	1042.7	52.2	1295.0		20714.1
	1991	944.6	9804.0	2379.5	2324.4	2616.4	886	45.4	1172.6		20172.9
	1992	787.2	10590.6	2130.7	2348.2	2388.5	733	61.5	1065.7		20105.4
	1993	668.4	9804.0	1862.5	1892.3	2023.1	571.6	47.4	1065.1		17934.5
	1994	536.1	9576.0	1817.8	1728.4	1760.1	290.2	41.2	843.0		16592.9

	Year	Coal	Gas	Gasoline	Diesel Fuel	Mazut	Other oil pr	Hydro	Electricity	Heat	Total
ELECTR. GENERATION	1985		-1298.0	-3.0	-29.8	-980.0		-60.8	820.9		-1550.6
	1990		-1414.0		-55.1	-401.0		-52.2	851.1		-1071.2
	1991		-1430.0		-43.2	-391.0			850.7		-1013.5
	1992		-1511.0		-44.7	-389.0			812.5		-1132.2
	1993		-1613.0		-32.8	-314.6		-47.4	780.3		-1227.6
	1994		-1704.0		-26.8	-245.0		-41.2	759.9		-1257.1
CHP Plants	1985		-928.4			-304.4				1051.5	-181.3
	1990		-1251.3			-172.7				1215.5	-208.5
	1991		-1249.0			-81.3				1134.0	-196.3
	1992		-1185.1			-55.0				1059.6	-180.5
	1993		-998.7			-40.0				886.6	-152.1
	1994		-827.9			-30.7				732.9	-125.7
DISTRICT HEATING	1985	-112.6	-2004.1	-1.5	-64.1	-488.7	-64.4			2434.4	-301.0
	1990	-43.4	-2151.2		-3.0	-447.0				2605.2	-39.4
	1991	-38.0	-2360.9		-3.0	-454.5				2597.7	-258.6
	1992	-32.6	-2804.4		-1.5	-436.6				2407.8	-867.2
	1993	-26.5	-2770.2		-3.0	-405.3				2270.1	-934.8
	1994		-2690.4		-3.0	-388.9				1977.0	-1105.3
Waste Heat Recovery Units	1985									92.7	92.7
	1990									240.2	240.2
	1991									167.6	167.6
	1992									143.0	143.0
	1993									120.8	120.8
	1994									87.2	87.2
OWN USE & LOSSES	1985	-1.4	-116.3	-6.0					-246.6	-101.7	-471.9
	1990		-68.4	-4.5					-277.7	-121.3	-471.8
	1991		-70.7	-4.5					-224.9	-115.1	-415.2
	1992		-77.5	-4.5					-208.4	-106.5	-396.9
	1993		-68.4	-3.0					-224.7	-91.5	-387.6
	1994		-62.7	-3.0					-195.2	-78.7	-339.5

	Year	Coal	Gas	Gasoline	Diesel Fuel	Mazut	Other oil pr	Hydro	Electricity	Heat	Total
TOTAL FINAL CONSUMPTION	1985	1510.6	3544.3	2147.1	2913.0	1691.2	1085.2		1844.0	3476.9	18212.1
	1990	1072.9	4545.2	2449.6	2471.9	1811.8	1042.2		1911.6	3939.9	19245.1
	1991	986.7	4693.4	2361.7	2278.2	1689.7	885.7		1835.9	3794.2	18525.4
	1992	819.1	5010.3	2115.8	2302.1	1507.9	733.3		1688.4	3503.9	17680.8
	1993	690.1	4353.7	1849.1	1856.5	1263.2	571.6		1638.6	3186.0	15408.8
	1994	574.1	4291.0	1808.9	1700.1	1095.6	290.2		1468.8	2718.4	13947.1
INDUSTRY TOTAL	1985	259.9	1662.1		283.1	132.6	2.7		689.2	2108.7	5138.3
	1990	165.6	1912.9		217.5	171.4			700.5	2163.2	5331.1
	1991	151.3	1761.3		186.3	144.5			581.4	2076.1	4900.8
	1992	122.8	1545.8		168.4	132.3			522.6	1779.3	4271.3
	1993	92.3	1292.8		140.1	112.9			469.0	1522.4	3629.4
	1994	73.3	1327.0		123.7	97.3			384.5	1287.9	3293.5
Fuel	1985	138.4	287.3			23.8			9.7	153.6	612.9
	1990	88.2	191.5			13.4			43.7	168.7	505.6
	1991	80.1	172.1			10.4			40.3	171.3	474.3
	1992	64.5	166.4			10.4			38.8	137.3	417.4
	1993	48.2	150.5			8.9			39.6	117.3	364.5
	1994	38.0	153.9			6.0			35.1	93.8	326.7
Iron & Steel	1985								1.4	1.1	2.5
	1990		66.1			1.5			0.5	28.3	96.4
	1991		45.6			1.5			0.3	26.6	74.0
	1992		38.8			0.9			0.4	21.6	61.7
	1993		31.9			0.4			0.2	16.9	49.4
	1994		25.1			0.4				14.7	40.3
Non-Ferrous Metals	1985										
	1990										
	1991										
	1992								0.1		0.1
	1993								0.1		0.1
	1994								0.0		0.0

	Year	Coal	Gas	Gasoline	Diesel Fuel	Mazut	Other oil pr	Hydro	Electricity	Heat	Total
Chemical and Petrochemical	1985		36.5						69.9	337.2	443.5
	1990		12.5			16.4			55.9	297.6	382.4
	1991		8.0			11.9			54.4	275.1	349.5
	1992		8.0			9.2			45.1	223.1	285.4
	1993		5.7			6.0			37.1	193.3	242.1
	1994		5.7			4.5			30.0	149.0	189.2
Machinery	1985	4.1	51.3		6.0				92.3	198.5	352.1
	1990	2.7	58.1		6.0	1.5			96.1	179.5	343.9
	1991	2.0	52.4		6.0	1.5			83.8	171.7	317.5
	1992	1.0	45.6		4.5	1.5			57.2	140.4	250.1
	1993	0.7	36.5		3.0	0.7			41.3	109.4	191.6
	1994	0.7	33.1		3.0	0.7			36.0	92.1	165.6
Wood, Paper, Pulp & Printing	1985		37.6		11.9	7.5			41.2	201.1	299.3
	1990	0.7	53.6		6.0	8.9			46.8	204.9	320.9
	1991	0.4	46.7		6.0	7.5			28.3	198.1	286.9
	1992	0.3	41.0		4.5	7.5			24.2	178.2	255.6
	1993		34.2		3.0	6.0			21.1	138.0	202.2
	1994		28.5		3.0	4.5			28.1	122.8	186.9
Constructive Materials	1985	61.1	1105.8		10.4	76.0			123.6	257.5	1634.5
	1990	58.4	1203.8		7.5	82.0			129.2	212.4	1693.1
	1991	54.3	1151.4		6.0	70.0			118.0	209.1	1608.8
	1992	45.5	982.7		6.0	65.6			109.3	173.0	1382.0
	1993	34.6	806.0		4.5	59.6			101.6	164.5	1170.7
	1994	28.5	859.6		3.0	55.1			93.0	133.1	1172.3
Construction	1985	2.0	11.4		120.7	6.0			27.6	14.6	182.2
	1990	2.0	17.1		90.9	6.0			43.2	42.3	201.5
	1991	2.0	14.8		73.0	6.0			37.5	38.8	172.0
	1992	1.4	13.7		61.1	4.5			18.6	37.6	136.8
	1993	1.0	11.4		52.2	4.5			17.9	30.9	117.8
	1994	0.7	8.0		46.2	3.0			24.0	26.3	108.2

	Year	Coal	Gas	Gasoline	Diesel Fuel	Mazut	Other oil pr	Hydro	Electricity	Heat	Total
Textile & Leather	1985	3.4	9.1						42.7	115.4	170.
	1990		4.6						39.9	83.9	128.
	1991		4.6						36.0	71.2	111.
	1992		4.6						22.5	51.5	78.
	1993		3.4						18.8	44.0	66.
	1994		3.4						11.7	35.9	51.
Food and Tobacco	1985	46.8	93.5		122.2	19.4			101.2	778.3	1161.
	1990	12.9	247.4		104.3	41.7			140.9	868.7	1415.
	1991	11.8	225.7		92.4	35.8			124.2	847.7	1337.
	1992	9.6	209.8		90.9	32.8			118.0	773.1	1234.
	1993	7.1	176.7		77.5	26.8			109.5	679.3	1076.
	1994	4.8	182.4		68.5	23.1			105.8	592.6	977.
Other	1985	4.1	29.6		11.9		2.7		179.7	51.3	279.
	1990	0.7	58.1		3.0				104.5	76.8	243.
	1991	0.7	39.9		3.0				58.4	66.5	168.
	1992	0.7	35.3		1.5				88.4	43.6	169.
	1993	0.7	36.5						81.8	28.9	147.
	1994	0.7	27.4						20.7	27.5	76.
TRANSPORT	1985	17.0	10.3	1820.8	1157.7	1178.6	1082.5		187.3	26.0	5480.
	1990	10.9	2.3	1937.0	1622.6	1189.0	1042.2		238.2	100.7	6142.
	1991	8.8	4.6	1883.4	1534.7	1159.2	885.7		225.3	101.8	5803.
	1992	6.1	4.6	1713.5	1601.8	1037.0	733.3		226.0	98.7	5420.
	1993	4.1	4.6	1525.8	1293.3	846.3	571.6		227.1	85.4	4558.
	1994	2.7	3.4	1540.7	1198.0	736.1	290.2		169.2	69.1	4009.

	Year	Coal	Gas	Gasoline	Diesel Fuel	Mazut	Other oil pr	Hydro	Electricity	Heat	Total
Agriculture	1985	42.1	125.4	178.8	1096.6	35.8			320.4	233.5	2032.6
	1990	13.6	58.1	99.8	490.2	44.7			344.2	110.1	1160.8
	1991	14.3	78.7	93.9	458.9	46.2			338.3	125.8	1156.0
	1992	12.2	79.8	87.9	439.6	43.2			289.1	140.1	1091.9
	1993	9.5	77.5	80.5	350.2	41.7			299.5	122.0	980.8
	1994	7.5	69.5	73.0	321.8	34.3			279.6	109.8	895.6
Population	1985										
	1990								274.4		274.4
	1991								358.8		358.8
	1992								320.4		320.4
	1993								356.9		356.9
	1994								418.4		418.4
Resid/Comm. & Public Services	1985	1129.9	1653.0	113.2	219.0	120.7	6.9			959.8	4202.5
	1990	838.1	2481.8	380.0	58.1	129.6			311.0	1156.0	5354.6
	1991	774.3	2753.1	357.6	53.6	123.7			294.7	1210.2	5567.2
	1992	648.1	3302.6	292.0	50.7	119.5			311.8	1284.1	6008.7
	1993	568.0	2918.4	226.5	37.3	113.2			268.2	1372.8	5504.3
	1994	477.1	2844.3	184.8	31.3	105.8			217.2	1238.4	5098.8
Non-specified sectors	1985	44.1	76.4	34.3	156.5	17.9	66.5			148.9	544.5
	1990	38.7	68.4	32.8	83.4	7.5	30.0			410.0	670.7
	1991	30.5	73.0	26.8	44.7	6.0	29.0			280.3	490.3
	1992	26.5	59.3	22.4	41.7	6.0	29.0			201.6	386.4
	1993	14.3	46.7	16.4	35.8	4.5	28.0			83.5	229.1
	1994	12.9	35.3	10.4	25.3	4.5	27.0			13.3	128.8
NON-ENERGY USE	1985	17.6	17.1			205.6					240.4
	1990	6.1	21.7			269.7					297.5
	1991	7.5	22.8			210.1					240.4
	1992	3.4	18.2			169.9					191.5
	1993	2.0	13.7			144.5					160.2
	1994	0.7	11.4			117.7					129.8
	1995										

The structure of final energy consumption by fuels in 1990 was as follows (in brackets there are data for 1994):

* coal	5.9%	(4.2%)
* gas	25.0%	(31.6%)
* petroleum products	37.0%	(33.8%)
* electricity	10.2%	(10.4%)
* district heating	21.7%	(20.0%)

Krasnodar Krai is a net importer of energy, and reliability of energy supply to a large degree depends on reliability of external energy supply.

Energy production in Krasnodar Krai in recent years was relatively stable (see Table 13). Electricity production declined in 1990-1994 by 11 percent. At the same time mazut production grew by 50%.

Specific balances for electricity and heat are presented in Tables 14, 15 and 16.

Electricity consumption data present a significant amount of problems with data reliability and consistency.

The most substantial discrepances are resulting from the differences in the determination of electricity consumption in agriculture, residential and commercial sectors. Agricultural electricity consumption reported in a number of sources often contains energy consumption by rural population for non-productive activities. This volume should be shown in the residential sector. Residential sector in some sources includes so-called other activities. Not enough data were available to get all those discrepances fixed. As a result, in electricity balance presented in Table 15 residential, commercial and other sectors was combined.

108

Table 13. Energy production in Krasnodarsky krai

	1985	1990	1991	1992	1993	1994
Electricity, mln.kWth	6707	6920	6917	6605.8	6343.5	6178
Heat, mln.Gcal	25.1	28.4	27.3	24.7	23	19.6
Oil and Gas Condensate, mln.t	3	2	1.9	1.8	1.73	1.604
Mazut, th.t	1283	1136	217	200	433	226
Diesel Fuel, th.t	707	1346	497	453	346	310
Gasoline, th.t	1096	616	294	267	194	170
Kerosene, th.tce	406	89		179	215	
Natural Gas, bln.m3	2.9	2.2	1.4	1.4	1.5	1.5

Table 14. Electricity Consumption by Krasnodar Krai (data from various sources)

Energy utilization and information sources	1990	1991	1992	1993	1994
Industry					
VNIIKTEP	5344.5	4421.9	4097.8	3667.4	3427.1
INCOTEK	5345	...	4097.8	3667.4	...
TEB'90	5233				
Kubanenergo'94 (total quarterly)					2925.6
V.I.Gorin (RAO EES ROSSII)				3763.7	
Agriculture					
VNIIKTEP	4349.8	4568.7	4301.4	4354	3471.5
INCOTEK	2799	...	3017.7	2871.4	...
TEB'90	1526				
Kubanenergo					2273.3
Residential and Commercial					
VNIIKTEP (population included)	3208.6	3494.4	3188.2	3163.3	3472.5
VNIIKTEP (population excluded)	977.6	577.4	583.2	261.3	...
INCOTEK	1311	...	838.6	798.4	...
TEB'90 and statistic 11-CH for 1991-1994	1311	752.7	1117.1	469.5	407.3
Kubanenergo				3319.8	1556.6
V.I.Gorin (RAO EES ROSSII)					
Residential					
VNIIKTEP	2231	2917	2605	2902	...
INCOTEK	3654	...	2604.8	2901.9	...
TEB'90 and statistic 11-CH for 1991-1994	3654	3803.3	868.2	4411.6	3496.7
Kubanenergo					3401.4
Other activities					
VNIIKTEP	-	-	-	-	-
INCOTEK	1666		2351.5	2406.8	
TEB'90	1028	...	...	...	...
Kubanenergo					2754.8
Construction					
VNIIKTEP	350.9	304.6	151.2	145.4	195.4
INCOTEK	351	...	151.2	145.4	...
TEB'90	205				
Kubanenergo					195.4
Transport					
VNIIKTEP	1936.5	1831.6	1837.4	1846.1	1375.3
INCOTEK	1937		1837.4	1846.1	
TEB'90	1693				
Kubanenergo					1375.3

Table 15. Electricity Consumption by Krasnodarsky Krai*

th. kWth

	1990	1991	1992	1993	1994	Structure 1994, %	Rate 1994/1990
Total Consumption	17447.7	16449.6	15270.3	15002.8	13528.8	100	77.54
Own Use	385.2	383.6	371.3	365.4	286	2.11	74.25
Losses	1872.2	1444.8	1323	1461.2	1301	9.62	69.49
Final Consumption	15190.3	14621.2	13576	13176.2	11941.8	88.27	78.61
Industry	5344.5	4421.9	4097.8	3667.4	2930.3	21.66	54.83
Agriculture	2798.7	2750.2	2350	2435	2273.3	16.80	81.23
Transport	1936.5	1831.6	1837.4	1846.1	1375.3	10.17	71.02
Construction	350.9	304.6	151.2	145.4	195.4	1.44	55.69
Population	2231	2917	2605	2902	3401.4	25.14	152.46
Resid.,Commerc.,and Others	2528.7	2395.9	2534.6	2180.3	1766.1	13.05	69.84

* CENEf expert estimates based on various sources

Table 16. Heat Consumption in Krasnodarsky Krai

th.Gcal

	1985	1990	1991	1992	1993	1994
Generation						
CHP Plants	7353	8500	7930	7410	6200	5125
District Heating	17024	18218	18166	16838	15875	13825
Waste Heat Recovery Units	648	1680	1172	1000	845	610
Total	25025	28398	27268	25248	22920	19560
Consumption						
1. Industry	14644	14829	14177	12180	10430	8822
Power sector						
Fuel Industry	1074	1180	1128	960	820	656
Ferrous metalurgy	8	198	186	151	118	103
Non-ferrous metalurgy						
Chemical and perochemical	2358	2081	1924	1560	1352	1042
Machinery	1388	1255	1201	982	765	644
Wood, Pulp and Paper	1406	1433	1385	1246	965	859
Building materials	1801	1485	1462	1210	1150	931
Light industry	807	587	498	360	308	251
Food industry	5443	6073	5928	5406	4750	4144
other industry	359	537	465	305	202	192
2. Agriculture	1633	770	880	980	853	768
3. Transport	182	704	712	690	597	483
4. Construction	102	296	271	263	216	184
5. Other	1041	2867	1960	1410	584	93
6.Residential and commercial	6712	8084	8463	8980	9600	8660
Total useful consumption	24314	27550	26463	24503	22280	19010
Losses	711	848	805	745	640	550
Total Consumption	25025	28398	27268	25248	22920	19560

There is no disagreement between the sources on the heat balance for Krasnodar Krai. Heat consumption in 1985-1990 grew by 13.5 percent, but then declined by 31 percent in 1990-1994. The major decline occurred in industry - 41 percent. It was about as deep as industrial output decline. Against this background the volume of heat consumption in the second largest heat consuming sector - residential and commercial - grew by 7 percent.

1.5. Energy Prices

Skyrocketing of energy prices is one of the most noticeable changes in the overall energy picture of North Caucasus and Krasnodar Krai. Price evolution is presented in Table 17. Data presented in this table indicated prices for the end of the year. Time limit did not allow for careful fuels price data collection and aggregation in the region.

Average annual data used in calculations were taken from two major sources:

- ⇒ Russian energy prices, taxes and costs. 1993. IEA/OECD. Paris. 1994. 100 p.
- ⇒ Russian Energy Picture. January-March 1995. CENEf. Moscow. 56 p.
- ⇒ For electricity and heat Krasnodar Krai data were taken. Several sources were used.

Table 17. Wholesale energy prices (rubles)

	1991	1992	1993	1994	March 1995
Natural gas, m^3	44	940	19166	64758	99111
Mazut, t	-	9192	29500	83850	200100
Diesel fuel, t	371	16034	82700	251250	415250
Gasoline, t	117	19710	97974	312250	510400
Electricity, 100 kWh	-	-	-	-	-
industrial consumers	5	406	3120	10350	15000
urban population	-	-	500	976	2927
rural population	-	-	333	683	2033
Heat for industrial consumers	13	1599	5130	15055	15055

Table 18 shows energy prices in 1995 US dollars. 1995 July exchange rate (4549R/$) was used. For visual effect energy prices dynamics in 1990-2010 is also presented in Figure 1 and Figure 2.

Tables 18a and 18b show nominal and real energy prices corrected for the evolution of GDP price deflator. It is clear that real prices were growing with the exception of residential sector. Decline of prices in this sector was one of the major factors neutralizing energy consumption decline. Energy prices grew abruptly in the first half of 1995.

Relative energy prices evolve substantially. For example, for industrial sector electricity price grew 11,611-fold in 1990-1995, whereas natural gas prices grew by 8,156 times. Steam coal price grew 5,667-fold, and mazut prices - 7,279-fold. Energy price competition within the limits of physical infrastructure became a real factor of energy balance evolution for all energy consumption sectors.

Table 18. . Krasnodarsky Krai Energy Prices (in 1995 prices), 1995 USD

Year	Oil	Gasoline	Diesel	Mazut	Gas			Coal		Electrisity					Heat		
	$/t	$/t	$/t	$/t	$/th.m3			$/t		c/kWh					$/Gcal		
					power	industry	resid	steam	coking	industry	transp	agric	comme	urban resid	industry	public	resid
1990	13.90	108.45	37.82	18.91	12.79	14.46	2.78	6.67	10.57	1.00	1.11	0.56	0.56	1.11	1.11	1.11	0.56
1991	17.76	52.79	36.82	20.08	11.85	13.39	2.58	9.78	18.03	0.56	1.11	0.56	0.56	0.56	4.38	1.03	0.52
1992	38.41	125.60	88.86	50.60	19.03	21.66	3.88	14.32	27.26	1.67	1.67	1.11	0.22	0.22	7.17	1.75	0.15
1993	33.16	125.91	109.99	39.42	13.51	15.42	1.91	13.05	26.08	2.78	2.78	1.11	1.11	0.56	7.06	3.22	0.07
1994	24.47	112.15	95.89	34.73	15.17	15.17	0.64	7.52	0.00	2.22	2.22	0.56	0.56	0.56	3.89	8.31	0.83
1995	47.70	246.21	142.45	54.41	41.24	41.24	4.40	14.95	0.00	4.59	4.59	3.52	4.59	1.54	9.48	9.48	1.10

Fig. 1. Krasnodar Krai Energy Prices, 1995 USD

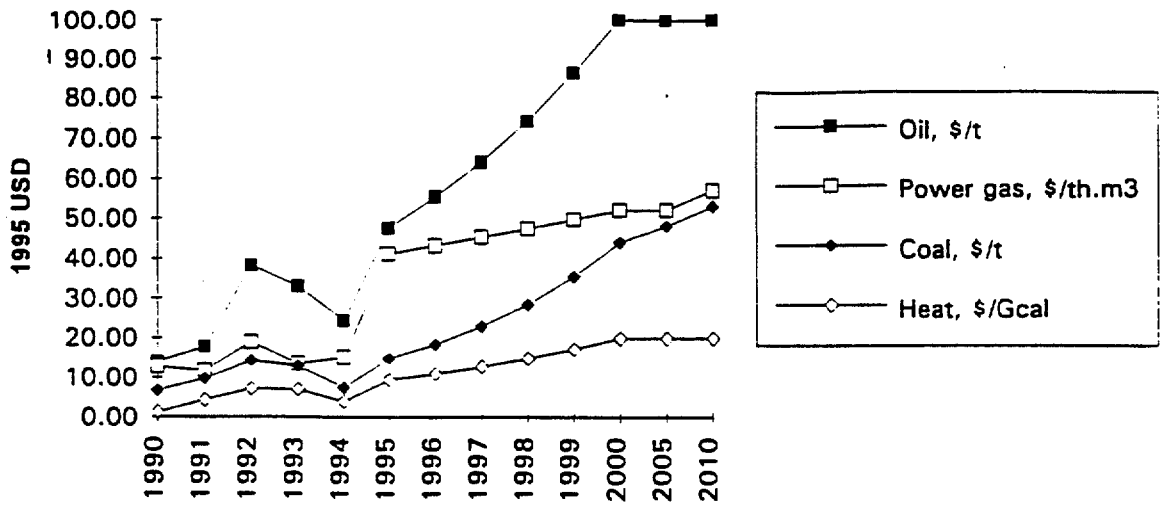

Fig. 2. Krasnodar Krai Electricity Prices, 1995 USD

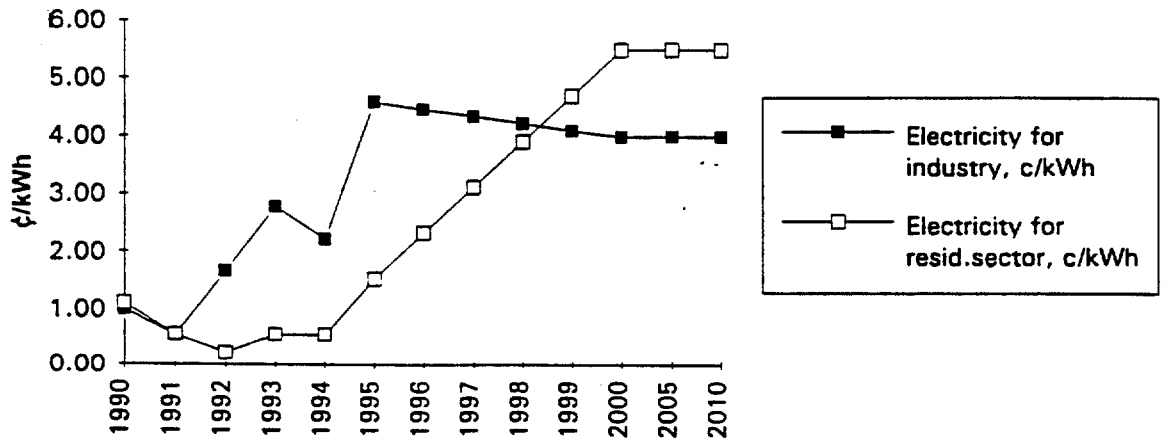

Table 18a. Krasnodar Krai Energy Prices (nominal prices)

Year	Crude oil	Gasoline (a-76)	Diesel Fuel	Mazut	Gas			Coal (Rub/t)		Electricity					Heat (Rub/Gcal)		
	Rub / t				Rub/th.m³					(R / kWh)							
					power	industry	resid	steam	coking	industry	trans	agric	commer	urban resid	industry	public	resid
1990	25	195	68	34	23	26	5	12	19	0.018	0.02	0.01	0.01	0.02	2	2	
1991	69	205	143	78	46	52	10	38	70	0.03	0.04	0.025	0.03	0.03	17	4	2
1992	2572	8410	5950	3388	1274	1450	260	959	1825	1.18	1.18	0.77	0.17	0.15	480	117	10
1993	22628	85905	75046	26893	9222	10520	1300	8907	17795	17.15	17.15	8.5	7.78	3.15	4816	2197	48
1994	76800	352000	301000	109000	47600	47600	2000	23600		70	70	16	9	9	12211	26105	2610.5
1995	217000	1120000	648000	247500	187591	187591	20000	68000		209	209	160	209	70	43135	43135	5000

Table 18b. Krasnodar Krai Energy Prices (in 1990 prices)

Year	Crude oil	Gasoline (a-76)	Diesel Fuel	Mazut	Gas			Coal (Rub/t)		Electricity					Heat (Rub/Gcal)		
	Rub / t				Rub/th.m³					(R / RWh)							
					power	industry	resid	steam	coking	industry	trans	agric	commer	urban resid	industry	public	resid
1990	25.00	195.00	68.00	34.00	23.00	26.00	5.00	12.00	19.00	0.02	0.02	0.01	0.01	0.02	2.00	2.00	1.00
1991	31.94	94.91	66.20	36.11	21.30	24.07	4.63	17.59	32.41	0.01	0.02	0.01	0.01	0.01	7.87	1.85	0.93
1992	69.07	225.83	159.77	90.98	34.21	38.94	6.98	25.75	49.01	0.03	0.03	0.02	0.00	0.00	12.89	3.14	0.27
1993	59.63	226.39	197.77	70.87	24.30	27.72	3.43	23.47	46.90	0.05	0.05	0.02	0.02	0.01	12.69	5.79	0.13
1994	43.99	201.64	172.42	62.44	27.27	27.27	1.15	13.52	0.00	0.04	0.04	0.01	0.01	0.01	6.99	14.95	1.50
1995	85.77	442.69	256.1	97.83	74.15	74.15	7.91	26.88	0.00	0.08	0.08	0.06	0.08	0.02	17.05	17.05	1.98

1.6. Quality of North Caucasus and Krasnodar Krai Statistical Data

Quality of North Caucasus and Krasnodar Krai statistical data which was used to calibrate the model is relatively poor. This can be explained by three major factors:

- time limit for data collection process determined by the time limit given to CENEf to implement the project;
- poor quality and realibility of energy statistical data in the region, especially for non-utility sector;
- lack of culture to openly publish and discuss the energy statistics;
- existence of several different basic methodologies of data clollection and preparation used in different agencies without noting which one was actually used.

The quality of these data was poor before and the situation is worthening now. Substantial additional efforts are required to improve the quality of the data. This issue has another application related to the presentation of the model results. There is no reason to sophisticate the model to the degree when additional accuracy of the results is beyond the accuracy of the statistical evaluation of those indices.

2. General Description of the Energy Balance Model

2.1. Complex of Models

Energy and economic data collection has always been a nightmare in the Former USSR, and even more so now. There were and still are many different methodologies and models for energy system evolution projections developed in the Former USSR. Many of these methods are not valid any more and should be replaced for at least two reasons:

- the system of decision making is under significant evolution and models tuned to command-administrative economy with no incorporation of market parameters fail to predict final energy consumers' and energy producers' behavior and reaction to market signals;
- all models were developed to simulate growth of energy system and not enough knowledge is available for the description of energy system in periods of rapid economic decline or revival.

For those who are trying to incorporate market variables in their models face another significant challenge: lack of more or less reliable information based on which parameters of energy producers' and consumers' reaction to market signals could be calibrated.

For modeling energy future of Krasnodar Krai a set of models developed at CENEf was used. This set is composed from Regional Energy Balance model (REB) and energy demand models for three subsectors:

- industry and construction (RECIN);
- agriculture (RECA);
- residential (RECR).

Shortage of information prevented us from calibration of two other sectoral models: for transport and commercial sector.

Sectoral models are used to aggregate the impact on sectoral energy demand of such factors as level of economic activity and energy prices. Disaggregated information is used to calibrate aggregate model parameters: ranges of elasticity coefficients evolution.

2.2. General description of the Regional Energy Balance Model

This model describes energy demand by nine energy consuming sectors:

- electricity generation;
- CHP;
- boilers;
- own use and losses of energy resources;
- industry and construction;
- agriculture
- transport;
- residential and commercial;
- other, including non-energy use.

Six primary energy sources are considered: coal, other solid fuels, petroleum products, natural gas, hydro and nuclear power. Six secondary energy carriers are considered for each sector: coal, other solid fuels, petroleum products, natural gas, electricity, heat.

Major exogenous variables of the model are:

- population growth;
- rates of GDP growth;
- energy prices by fuels and by sectors;
- volume of hydro power production;
- efficiency of heat and electricity generation;
- elasticity coefficients and interfuel price competition functions.

Elasticity coefficients for this model are taken from generalization of multiple sectoral model runs. Using a set of various assumptions the range of possible variations of such coefficients was estimated. Thereafter such ranges were used in REB model runs.

REB model first estimates total energy consumption by sectors using energy demand functions. Price impacts influence the results through elasticity coeficients. Distributed price effect is mirrored by having this and last year's price growth impacts on the given year energy consumption. Then overall consumption is distributed by energy carriers using a matrix of shares. Share of every energy carrier depends on the fuel quality (through special coefficients) and relative fuel price. As a result of this operation, the matrix of final energy consumption by sectors and by energy sources is calculated.

Own use and losses are estimated by multiplying final energy consumption for each energy carrier by a specific coefficient. As a result, demand for electricity and district heat is estimated (sum of final use and own use and losses). Then heat generation is distributed by two parts: produced by boilers and CHP. Lack of information did not allow us to do this operation the way it could have been done.

168

Therefore, energy consumed at CHP was estimated only for the fuel necessary to produce only heat at CHP with all fuels for electricity generation at CHP transferred to the electricity generation sector.

Given substantial electricity import to the region, the level of local electricity production is determined by electricity consumption and net import from the regions. There is no heat import.

After the level of electricity and heat generation is estimated, the structure of fuel balance for the power and heat sectors is determined. The first important factor is efficiency of heat and electricity generation. It substanially affects the volume of fuel balance for power, CHP and boilers sectors. Then, given the matrix of fuels shares determined as a function of relative energy prices, every fuel consumption in power and heat generating sectors is estimated.

Primary energy consumption by fuels is a sum of final energy consumption, own use and losses, and energy consumption in electricity generating sector, CHP, and boilers.

Level of local energy production determines the volume of interregional energy trade.

2.3. Model Calibration

The model was calibrated based on North Caucasus and Krasnodar Krai data. Lack of economic data on North Caucasus (for example, regional energy prices) brought us towards a division to use Krasnodar Krai data as a proxy in some instances. As was mentioned before, realibility of these data is questionable. Improvement of data inputs will improve calibration of model parameters.

3. Projection Scenarios

3.1. General Assumptions

The future of North Caucasus and Krasnodar Krai economic development is very uncertain. A number of crucial external factors will substantially effect this future. Just a few to mention:

* political stability in North Caucasus region;
* economic policy of the Russian government;
* rates and proportions of economic growth;
* continuation of the trend of Russian population migration to the south;
* availability of fuels in the region and energy prices.

Refracted through the prism of problems and specific features of energy supply for the region, the region's energy policy goals are formulated as follows:

1. Reliable supply of energy carriers and energy services to consumers;
2. Improving flexibility and adjustability of the energy supply system to energy flow breaks and rapidly changing market conditions;
3. Creation of favorable conditions for energy trade with other regions;
4. Improving the diversity of energy sources used by attracting local resources;
5. Cooperation and coordination of activities of all energy market participants;

6. Stimulating economic growth and improving the competitiveness of goods produced in the region by providing least-cost energy services;
7. Sustainable and environmental friendly development of energy supply systems through rational and efficient energy use;
8. Preserving the balance between energy demand growth and negative impacts caused by energy generation and utilization by coordinated and integrated resource planning.

There are a number of approved government decisions which can impact exogenous price variables:

* transition to the full coverage of energy costs by tenants by 1998;
* transition to so-called world energy prices;
* transition of present regional energy commissions to professional ones with making rate cases process transparent.

Major exogenous impulses to the REB are:

* levels of economic activity by sectors;
* energy prices.

Two scenarios for those inputes were developed: economic depression and economic revival.

3.2. Economic Depression Scenario

Future levels of economic activity are very uncertain. Among various projections for the future there is one of the most recent developed by the Central Bank. The first scenario was built based on it. We named this scenario "economic depression". It suggests that Russian GDP in the year 2000 will still be four percent below the 1994 level. (See Table 19). Therefore, it is a very pessimistic scenario. Rates of economic activities by sectors were taken from the Central Bank projections. As to energy prices, given depressed local energy market, energy lobby will press on the government to bring prices up to the "world level" as soon as possible to keep energy sector alive, and the depth of depression partly will be a result of high energy prices.

Rates of economic growth are proposed equal to -5 percent in 1995, 1 percent per year in 1996-2000 and 4 percent per year thereafter. Both in this scenario and in the pessimistic one, the same energy prices were used. These prices were discussed with the World Bank experts in July 1995. They are the following (in 1995 prices, in brackets growth rate):

	2000	2010
• crude oil, $/t	100(209.6%)	100(209.6%)
• natural gas for all sectors, $/th.m3	52(126.2%)	57(138.3%)
• coal, $/t	44(295.3%)	53(355.7%)
• electricity for industrial sector, c/kWh	4(87%)	4(87%)
• electricity for residential sector, c/kWh	5.5(357.1%)	5.5(357.1%)
• heat, $/Gcal	20(211%)	20(211%)

Table 19. **Russia's Economic Development up to 2000 (annual growth rates: a forecast by Central Bank of the Russian Federation)**

	1994	1995	1996	1997	1998	1999	2000
Gross Domestic Product	85	94	98	100	101	102	101
Private consumption	85	94	98	100	101	102	101
Fixed capital investment	74	88	101	105	106	106	105
The aggregate industrial output	83	93	98	100	101	102	101
Industry	76	92	97	100	101	102	102
Electric-power	89	86	86	90	97	101	101
Fuel	88	94	96	99	100	101	101
Metallurgy	88	93	99	101	102	102	102
Chemical and petrochemical	66	91	97	101	102	102	102
Machinery	61	92	99	102	103	103	103
Timber and paper	67	94	98	101	101	102	101
Building materials	71	92	99	102	103	103	103
Light	51	81	92	101	103	103	103
Food	76	94	98	100	101	101	101
Construction	75	89	101	105	106	106	105
Agriculture and forestry	91	95	98	100	101	101	101
Transport and communication	85	94	98	100	101	102	101
Trade	85	94	98	100	101	101	101

Source: Business World Weekly No. 13/15

Sensitivity analysis allows to identify variations of electricity or heat demand as a result of variation of major exogenous parameters.

It was proposed that due to autonomous, or non-price induced technical progress - introduction of more efficient equipment and technologies by replacing obsolete ones - energy intensity in each final consuming sector every year will be 1 percent lower.

Since market economy is under development, price elastisity will grow from -.02, to -.05 in 1995-1999, and then to -.1 since the year 2000.

3.2.1. North Caucasus

In the economic depression scenario electricity demand will grow by 11.6 percent in 2010 above the 1993 level, but it will stay below the 1990 level for all 15 years. (See Table 20). Electricity demand for the year 2000 is estimated equal to 51,884 mln kWh, and in the year 2010 it will equal 62,071 mln kWh.

The structure of electricity demand by sectors will evolve in the favor of industrial sector, but its share will not even approach the 1990 level. Contribution of residential and commercial sectors will be about one third against the background of one quarter in 1990.

Table 20. Electricity Consumption by Sectors in the North Caucasus *Scenario: depression*

Parameter		ELECTRICITY							Consumption
	Units	Industry 10^3kWh	Agricult 10^3kWh	Transport 10^3kWh	Resident 10^3kWh	Final 10^3kWh	Own Use 10^3kWh	Total 10^3kWh	Index '94=100
	1990	25082.11	7982.11	4852.85	14806.50	52723.58	10525.20	63248.78	113.71
	1990	39.66	12.62	7.67	23.41	83.36	16.64	100.00	
	1992	20990.24	9227.64	3791.06	14543.90	48552.85	9917.07	58469.92	105.12
YEARS	1993	17950.41	9052.85	3678.05	15247.97	45929.27	9692.68	55621.95	100.00
	1995	13683.78	7785.44	2871.39	17262.85	41603.46	8779.79	50383.24	90.58
	1995	27.16	15.45	5.70	34.26	82.57	17.43	100.00	
	1996	13627.52	7658.58	2815.61	16725.88	40827.58	8616.05	49443.63	88.89
	1997	13883.44	7785.75	2858.12	17186.43	41713.74	8803.06	50516.80	90.82
	1998	14144.75	7916.14	2898.29	17190.36	42149.53	8429.91	50579.44	90.93
	1999	14410.71	8047.46	2939.33	17375.82	42773.32	8554.66	51327.98	92.28
	2000	15000.11	8003.66	3042.53	17554.01	43600.31	8284.06	51884.37	93.28
	2000	28.91	15.43	5.86	33.83	84.03	15.97	100.00	
	2001	15526.59	8250.39	3157.71	18339.91	45274.60	8602.17	53876.78	96.86
	2002	16099.61	8416.79	3271.93	18697.15	46485.47	8832.24	55317.71	99.45
	2003	16693.68	8586.50	3390.27	19233.98	47904.44	9101.84	57006.28	102.49
	2004	17309.78	8759.62	3512.90	19497.84	49080.14	9325.23	58405.36	105.00
	2005	17982.71	8938.55	3639.96	19773.65	50334.88	9563.63	59898.50	107.69
	2005	30.02	14.92	6.08	33.01	84.03	15.97	100.00	
	2010	19241.91	9512.24	3885.92	19962.30	52602.38	9468.43	62070.81	111.59
	2010	31.00	15.32	6.26	32.16	84.75	15.25	100.00	

Table 21. Heat Consumption by Sectors in the North Caucasus *Scenario: depression*

Parameter	HEAT									Consumptio
	Units	Industry 10^3Gcal	Agricult 10^3Gcal	Transport 10^3Gcal	Resident 10^3Gcal	Non-Specifi 10^3Gcal	Final 10^3Gcal	Own Use 10^3Gcal	Total 10^3Gcal	Index '94=100
YEARS	1990	57246.85	4360.14	1850.35	33260.14	5039.86	101757.34	1432.17	103189.51	122.26
	1990	55.48	4.23	1.79	32.23	4.88	98.61	1.39	100.00	
	1992	47383.92	4090.21	1790.21	28409.79	4114.69	85788.81	1274.83	87063.64	103.15
	1993	43958.04	3960.14	1650.35	30492.31	3150.35	83211.19	1190.21	84401.40	100.00
	1995	36831.06	3891.43	1391.23	26955.85	2840.84	71910.41	1028.57	72938.98	86.42
	1995	50.50	5.34	1.91	36.96	3.89	98.59	1.41	100.00	
	1996	36300.54	3794.76	1343.79	26914.20	2766.26	71119.54	1017.26	72136.80	85.47
	1997	36499.63	3818.13	1343.27	28123.40	2773.06	72557.49	1037.82	73595.32	87.20
	1998	36666.11	3840.85	1340.87	28386.97	2777.67	73012.46	1044.33	74056.80	87.74
	1999	36807.45	3862.62	1338.39	28626.48	2780.29	73415.22	1050.09	74465.32	88.23
	2000	37674.17	3834.63	1377.59	28835.30	2836.44	74558.12	1066.44	75624.56	89.60
	2000	49.82	5.07	1.82	38.13	3.75	98.59	1.41	100.00	
	2001	38939.45	3947.05	1429.74	30082.21	2927.53	77325.98	1106.03	78432.01	92.93
	2002	40317.48	4020.77	1481.46	30623.31	3019.96	79462.99	1136.60	80599.58	95.50
	2003	41744.06	4095.84	1535.04	31456.51	3115.29	81946.74	1172.12	83118.87	98.48
	2004	43221.37	4172.31	1590.56	31841.40	3163.60	83989.25	1201.34	85190.58	100.94
	2005	44835.96	4251.32	1648.09	32244.60	3212.64	86192.61	1232.85	87425.47	103.58
	2005	51.28	4.86	1.89	36.88	3.67	98.59	1.41	100.00	
	2010	47695.48	4497.77	1759.46	32362.22	3328.49	89643.41	1282.21	90925.62	107.73
	2010	52.46	4.95	1.94	35.59	3.66	98.59	1.41	100.00	

Demand projection for district heat is shown in Table 21. It will grow by 7.7 percent in 1993-2010, but in 2010 it will still be 14.5 percent below the 1990 level. After reduction driven by economic crisis the industrial sector will regain the share in the overall heat consumption. It will nearly approach the 1990 level. Local heat generation capacities after proper modernization and replacement of obsolete facilities will be sufficient to cover additional heat demand.

Sensitivity analysis for this scenario (see Table 22) allows to make the following conclusions:

- fluctuations of economic growth rates by ±1% will bring variation of electricity demand by ±6% in 2010;
- growth of price elasticity coefficient from -0.05 to -0.1 in 1995-2010 is a very substantial parameter for the projection - it brings electricity demand down by 4 percent;
- non-price promoted technical progress in improving energy efficiency is a very important factor. Absence of autonomous technical progress in energy efficiency will bring electricity demand up by 8.3 percent and heat demand up by 8.5 percent;
- if energy prices are kept at the 1995 level, additional demand will be about 0.3 bln. kWh for electricity and about 3.4 mln. Gcal for heat in 2010.

Table 22. Sensitivity Analysis of Economic Depression Scenario for North Caucasus

		2000	2005	2010
Base assumptions	Electricity	51884	59899	62070
	D. heat	75625	87425	90926
Plus 1% of economic annual growth in 1995-2010	Electricity	53190	62954	65691
	D. heat	77892	92572	96825
Minus 1% of annual economic growth in 1995-2010	Electricity	50626	57072	58745
	D. heat	73443	82676	85519
Coefficient of price elasticity is - 0.1 since 1995	Electricity	49859	57537	59571
	D. heat	72850	84163	87465
No autonomous technical progress in efficiency by final consumption sectors	Electricity	54058	64372	67217
	D. heat	78885	94154	98685
Stable energy prices of the 1995 level	Electricity	52483	60304	62368
	D. heat	78620	90673	94292

3.2.2. Krasnodar Krai

In the economic depression scenario electricity demand will grow by 21.7 percent in 2010 above the 1994 level, but it will stay below the 1990 level for all 15 years to come. Electricity demand for the year 2000 is estimated equal to 13,698 mln kWh, and in the year 2010 it will equal 16,458 mln kWh.

The structure of electricity demand by sectors will be more or less stable with a slight growth of the industry share at the expense of residential and commercial sectors (see Table 23).

124

Table 23 Electricity Consumption by Sectors in the Krasnodar Krai *Scenario: depression*

Parameter	ELECTRICITY								Consumption
	Units	Industry 10^3kWh	Agricult 10^3kWh	Transport 10^3kWh	Resident 10^3kWh	Final 10^3kWh	Own Use 10^3kWh	Total 10^3kWh	Index '94=100
YEARS	1990	5695.37	2798.70	1936.59	4759.67	15190.33	2257.72	17448.05	128.97
	1990	32.64	16.04	11.10	27.28	87.06	12.94	100.00	
	1993	3812.76	2435.04	1846.34	5082.28	13176.42	1826.83	15003.25	110.90
	1994	3125.69	2273.33	1375.61	5167.48	11942.11	1586.99	13529.11	100.00
	1995	2706.73	1956.41	1153.05	5883.26	11699.45	1743.22	13442.67	99.36
	1995	20.14	14.55	8.58	43.77	87.03	12.97	100.00	
	1996	2645.82	1857.65	1128.99	5688.23	11320.69	1686.78	13007.48	96.14
	1997	2691.63	1893.11	1147.14	5848.30	11580.18	1725.45	13305.63	98.35
	1998	2738.20	1929.62	1164.33	5839.38	11671.54	1739.06	13410.59	99.12
	1999	2785.35	1966.55	1181.93	5890.66	11824.48	1761.85	13586.33	100.42
	2000	2821.95	1962.20	1192.28	5945.20	11921.63	1776.32	13697.95	101.25
	2000	20.60	14.32	8.70	43.40	87.03	12.97	100.00	
	2001	2930.49	2021.34	1242.27	6240.04	12434.15	1852.69	14286.84	105.60
	2002	3048.67	2068.28	1292.21	6352.19	12761.35	1901.44	14662.79	108.38
	2003	3171.59	2116.30	1344.15	6537.87	13169.90	1962.32	15132.22	111.85
	2004	3299.43	2165.41	1398.19	6609.57	13472.60	2007.42	15480.01	114.42
	2005	3444.88	2217.25	1454.39	6684.88	13801.40	2056.41	15857.81	117.21
	2005	21.72	13.98	9.17	42.16	87.03	12.97	100.00	
	2010	3689.53	2359.51	1558.71	6715.71	14323.46	2134.20	16457.66	121.65
	2010	22.42	14.34	9.47	40.81	87.03	12.97	100.00	

Table 24. Heat Consumption by Sectors in the Krasnodar Krai *Scenario: depression*

Parameter		HEAT							Consumption
	Units	Industry 10^3Gcal	Agricult 10^3Gcal	Transport 10^3Gcal	Resident 10^3Gcal	Final 10^3Gcal	Own Use 10^3Gcal	Total 10^3Gcal	Index '94=100
YEARS	1990	15127.27	769.93	704.20	8083.92	27552.45	848.25	28400.70	145.19
	1990	53.26	2.71	2.48	28.46	97.01	2.99	100.00	
	1993	10646.15	853.15	597.20	9600.00	22280.42	639.86	22920.28	117.17
	1994	9006.29	767.83	483.22	8660.14	19010.49	550.35	19560.84	100.00
	1995	8586.44	756.29	437.37	7711.71	17491.81	507.26	17999.07	92.02
	1995	47.70	4.20	2.43	42.85	97.18	2.82	100.00	
	1996	8306.48	711.87	421.83	7683.55	17123.73	496.59	17620.32	90.08
	1997	8340.04	718.01	422.07	8033.49	17513.60	507.89	18021.50	92.13
	1998	8365.57	724.08	421.71	8094.56	17605.92	510.57	18116.49	92.62
	1999	8384.75	730.01	421.32	8146.65	17682.73	512.80	18195.53	93.02
	2000	8365.55	728.14	422.62	8209.98	17726.29	514.06	18240.36	93.25
	2000	45.86	3.99	2.32	45.01	97.18	2.82	100.00	
	2001	8674.63	748.99	440.34	8604.54	18468.50	535.59	19004.09	97.15
	2002	9011.24	765.26	458.04	8746.38	18980.92	550.45	19531.37	99.85
	2003	9360.84	781.88	476.46	8988.87	19608.05	568.63	20176.68	103.15
	2004	9723.93	798.86	495.61	9074.17	20092.56	582.68	20675.24	105.70
	2005	10137.76	816.79	515.53	9164.14	20634.22	598.39	21232.61	108.55
	2005	47.75	3.85	2.43	43.16	97.18	2.82	100.00	
	2010	10794.33	864.12	552.51	9152.67	21363.63	619.55	21983.17	112.38
	2010	49.10	3.93	2.51	41.63	97.18	2.82	100.00	

A substantial part of electricity will be imported in the region if the present volume of electricity generation is kept until 2010. About 7 bln kWh in 2000 and 10 bln. kWh in 2010 will be required to cover the gap between the demand and present level of electricity generation.

Demand projection for district heat is shown in Table 24. It will grow by 8.6 percent in 1995-2010, and in 2010 it will be 33 percent below the 1990 level. Higher rates of demand growth in the industrial sector will contribute to the growing share of this sector in the overall heat consumption. Local heat generation capacities after proper modernization will be sufficient to cover heat demand.

Sensitivity analysis for this scenario (see Table 25) allows to make the following conclusions:

- fluctuations of economic growth rates by ±1% brings along variation of electricity demand by ±5% in 2010;
- price elasticity coefficient is a very substantial parameter for the projection;
- non-price promoted technical progress in improving energy efficiency is a very important factor. Absence of autonomous technical progress in energy efficiency will bring electricity demand up by 7.2 percent and heat demand up by 8.3 percent;
- keeping electricity prices at the 1995 level will bring additional demand for electricity by 0.3 bln. kWh in 2010.

Table 25. Sensitivity Analisys of Economic Depression for Krasnodar Krai

		2000	2005	2010
Base assumptions	Electricity D. heat	13698 18240	15858 21233	16458 21983
Plus 1% of economic annual growth in 1995-2010	Electricity D. heat	13961 18775	16529 22469	17255 23393
Minus 1% of annual economic growth in 1995-2010	Electricity D. heat	13442 17895	15236 20302	15726 20919
Coefficient of price elasticity is - 0.1 since 1995	Electricity D. heat	12967 17471	15000 20314	15542 21007
No autonomous technical progress in efficiency by final comsumption sectors	Electricity D. heat	14197 19035	16880 22814	17641 23799
Stable energy prices of the 1995 level	Electricity D. heat	14063 19097	16200 22184	16778 22981

3.3. Economic Revival Scenario

3.3.1. General Assumptions

The second scenario is based on much more optimistic assumptions. Economy will revive. Rates of economic growth are proposed equal to -5 percent in 1995, 4.7 percent in 1996, 5 percent per year in 1996-2010. This projection by spirit is closer to the economic program of the Russian government titled "Reforms and

Development of Russia's Economy in 1995-1997", where as one option GDP growth rates equal to 3-7 percent are considered for the year 1997.

As mentioned above, prices in this scenario are the same as in the previous one:

	2000	2010
• crude oil, $/t	100	100
• natural gas for all sectors, $/th.m3	52	57
• coal, $/t	44	53
• electricity for industrial sector, c/kWh	4	4
• electricity for residential sector, c/kWh	5.5	5.5
• heat, $/Gcal	20	20

3.3.2. North Caucasus

Results of electricity and heat projections for NC are presented in Tables 26 and 27. Electricity consumption in 2010 will reach 68,512 million kWh or 23 percent above the 1993 level and 10.5 percent above the 1990 level. The last milestone will be reached after 2005. The structure of electricity consumption by sectors will evolve, but industrial sector (34% in 2010) will still dominate over the residential and commercial sector (29% in 2010), followed by agriculture (14.4%), and transport (6.9%).

District heat consumption in 2010 will be 20 percent above the 1993 level. Nevertheless, heat demand in 2010 will be 2% below the 1990 level. Industrial heat demand is the major driving force for this growth - industrial heat consumption will grow by 31 percent in 1993-2010. In 2010 it will reach the 1990 level

Sensitivity analysis displays vulnerability of results to the major assumptions made of this scenario. Based on these two scenarios uncertainty of the future energy demand for the region will be covered and potential for the future electricity and heat markets by sectors will be estimated.

It is important to note that sectoral model runs with high rates of economic growth brought us to the conclusion that higher rates of economic growth are accompanied by lower energy demand to economic activity coefficient. Therefore, each percent of GDP growth in economic revival scenario is accompanied by lower electricity and heat demand growth compared to the economic depression scenario.

128

Table 26. Electricity Consumption by Sectors in the North Caucasus *Scenario: revival*

Parameter	ELECTRICITY								Consumption Index '94=100
	Units	Industry 10^3kWh	Agricult 10^3kWh	Transport 10^3kWh	Resident 10^3kWh	Final 10^3kWh	Own Use 10^3kWh	Total 10^3kWh	
YEARS	1990	25082.11	7982.11	4852.85	14806.50	52723.58	10525.20	63248.78	113.71
	1990	39.66	12.62	7.67	23.41	83.36	16.64	100.00	
	1992	20990.24	9227.64	3791.06	14543.90	48552.85	9917.07	58469.92	105.12
	1993	17950.41	9052.85	3678.05	15247.97	45929.27	9692.68	55621.95	100.00
	1995	14195.03	7785.44	2871.39	17262.85	42114.70	8887.68	51002.38	91.69
	1995	27.83	15.26	5.63	33.85	82.57	17.43	100.00	
	1996	14601.74	7682.49	2912.23	16757.19	41953.65	8853.69	50807.34	91.34
	1997	15396.46	7837.97	3062.77	17261.92	43559.11	9192.50	52751.61	94.84
	1998	16235.15	7997.67	3217.93	17318.50	44769.24	8953.85	53723.09	96.59
	1999	17119.13	8159.33	3381.34	17568.69	46228.50	9245.70	55474.20	99.73
	2000	17911.68	8289.28	3551.32	17816.71	47569.00	9038.11	56607.11	101.77
	2000	31.64	14.64	6.27	31.47	84.03	15.97	100.00	
	2001	18597.98	8494.59	3697.94	18203.71	48994.22	9308.90	58303.12	104.82
	2002	19363.34	8664.52	3865.31	18649.50	50542.67	9603.11	60145.78	108.13
	2003	20160.01	8850.76	4040.26	18958.63	52009.66	9881.83	61891.49	111.27
	2004	20989.49	9040.95	4223.12	19285.01	53538.56	10172.33	63710.89	114.54
	2005	21895.60	9237.72	4414.26	19629.48	55177.06	10483.64	65660.70	118.05
	2005	33.35	14.07	6.72	29.90	84.03	15.97	100.00	
	2010	23535.22	9880.70	4753.90	19891.13	58060.96	10450.97	68511.93	123.17
	2010	34.35	14.42	6.94	29.03	84.75	15.25	100.00	

Table 27. Heat Consumption by Sectors in the North Caucasus *Scenario: revival*

Parameter		HEAT								Consumptio
	Units	Industry 10^3Gcal	Agricult 10^3Gcal	Transport 10^3Gcal	Resident 10^3Gcal	Non-Specifi 10^3Gcal	Final 10^3Gcal	Own Use 10^3Gcal	Total 10^3Gcal	Index '94=100
YEARS	1990	57246.85	4360.14	1850.35	33260.14	5039.86	101757.34	1432.17	103189.51	122.26
	1990	55.48	4.23	1.79	32.23	4.88	98.61	1.39	100.00	
	1992	47383.92	4090.21	1790.21	28409.79	4114.69	85788.81	1274.83	87063.64	103.15
	1993	43958.04	3960.14	1650.35	30492.31	3150.35	83211.19	1190.21	84401.40	100.00
	1995	38207.12	3891.43	1391.23	26955.85	2920.27	73365.90	1049.39	74415.29	88.17
	1995	51.34	5.23	1.87	36.22	3.92	98.59	1.41	100.00	
	1996	38825.73	3799.77	1389.91	26916.12	2903.58	73835.10	1056.10	74891.20	88.73
	1997	40326.24	3829.38	1439.45	28141.47	2931.34	76667.88	1096.62	77764.50	92.14
	1998	41846.37	3858.41	1488.75	28436.51	2958.51	78588.55	1124.09	79712.64	94.44
	1999	43393.11	3886.56	1539.65	28724.39	2985.08	80528.78	1151.84	81680.63	96.78
	2000	44623.79	3939.42	1607.96	29030.62	3003.50	82205.28	1175.82	83381.11	98.79
	2000	53.52	4.72	1.93	34.82	3.60	98.59	1.41	100.00	
	2001	46243.69	4029.15	1674.35	29603.65	3052.72	84603.56	1210.13	85813.68	101.67
	2002	48053.34	4101.78	1750.13	30269.77	3110.83	87285.85	1248.49	88534.34	104.90
	2003	49933.34	4181.82	1829.34	30711.82	3169.99	89826.31	1284.83	91111.14	107.95
	2004	51886.97	4263.39	1912.13	31179.93	3230.24	92472.67	1322.68	93795.35	111.13
	2005	54021.92	4347.73	1998.68	31675.30	3291.57	95335.20	1363.63	96698.82	114.57
	2005	55.87	4.50	2.07	32.76	3.40	98.59	1.41	100.00	
	2010	57617.95	4614.37	2152.46	31849.14	3406.85	99640.77	1425.21	101065.98	119.74
	2010	57.01	4.57	2.13	31.51	3.37	98.59	1.41	100.00	

130

Sensitivity analysis allows to make the following conclusions (see Table 28):

- fluctuations of economic growth rates by ±1% will bring variation of electricity demand by ±6% in 2010;
- growth of price elasticity coefficient from -.05 to -0.1 in 1995-2000 will reduce electricity consumption by 4.1%;
- non-price promoted technical progress in improving energy efficiency is a very important factor. Absence of autonomous technical progress in energy efficiency will bring electricity and heat demand up by 9 percent;
- further 3% annual price growth after 2000 will bring electricity demand down by 0.9 bln. kWh;
- keeping electricity prices at the 2000 level against the background of other prices real growth by 3% per year will bring additional demand for electricity by 1.2 bln. kWh in 2010.

Table 28. Sensitivity Analisys of Economic Revival Scenario for North Caucasus

		2000	2005	2010
Base assumptions	Electricity	56607	65661	68512
	D. heat	83381	96699	101066
Plus 1% of economic annual growth in 1995-2010	Electricity	57899	68845	72311
	D. heat	85495	101787	106933
Minus 1% of annual economic growth in 1995-2010	Electricity	55354	62687	64987
	D. heat	81333	91946	95619
Coefficient of price elasticity is - 0.1 since 1995	Electricity	54364	63004	65684
	D. heat	80272	92996	97126
No autonomous technical progress in efficiency by final consumption sectors	Electricity	59021	70763	74421
	D. heat	87038	104450	110047
Real energy price growth by 3% per year in 2001-2010	Electricity	56607	64950	67573
	D. heat	83381	95550	99538
Real energy price growth by 3% per year for all energy carriers with the exception of electricity	Electricity	56607	65983	68761
	D. heat	83381	95617	99666

3.3.3. Krasnodar Krai

Results of electricity and heat projections for Krasnodar Krai are presented in Tables 29 and 30. Electricity consumption in 2010 will reach 17,493 million kWh or 29 percent of the 1994 level and will be a little above the 1990 level. The structure of electricity consumption by sectors will evolve, but residential sector (37.6% in 2010) will still dominate over the industrial sector (25% in 2010), followed by agriculture (13.4%), and transport (11%).

131

Table 29. Electricity Consumption by Sectors in the Krasnodar Krai *Scenario: revival*

Parameter	ELECTRICITY								Consumptio
	Units	Industry 10^3kWh	Agricult 10^3kWh	Transport 10^3kWh	Resident 10^3kWh	Final 10^3kWh	Own Use 10^3kWh	Total 10^3kWh	Index '94=100
	1990	5695.37	2798.70	1936.59	4759.67	15190.33	2257.72	17448.05	128.97
	1990	32.64	16.04	11.10	27.28	87.06	12.94	100.00	
	1993	3812.76	2435.04	1846.34	5082.28	13176.42	1826.83	15003.25	110.90
YEARS	1994	3125.69	2273.33	1375.61	5167.48	11942.11	1586.99	13529.11	100.00
	1995	2721.62	1956.41	1165.70	5883.26	11727.00	1747.32	13474.32	99.60
	1995	20.20	14.52	8.65	43.66	87.03	12.97	100.00	
	1996	2750.15	1857.10	1179.43	5691.18	11477.86	1710.20	13188.06	97.48
	1997	2896.18	1893.08	1240.35	5857.32	11886.92	1771.15	13658.07	100.95
	1998	3049.91	1930.11	1303.10	5857.22	12140.34	1808.91	13949.25	103.11
	1999	3211.50	1967.57	1369.20	5920.77	12469.05	1857.89	14326.93	105.90
	2000	3354.83	1997.43	1438.07	5996.40	12786.73	1905.22	14691.95	108.60
	2000	22.83	13.60	9.79	40.81	87.03	12.97	100.00	
	2001	3479.97	2041.73	1497.26	6108.81	13127.76	1956.04	15083.80	111.49
	2002	3620.26	2080.85	1565.03	6244.42	13510.56	2013.07	15523.63	114.74
	2003	3766.15	2122.77	1635.86	6330.22	13855.00	2064.39	15919.39	117.67
	2004	3917.87	2165.52	1709.90	6421.22	14214.51	2117.96	16332.47	120.72
	2005	4090.80	2210.72	1787.29	6517.68	14606.50	2176.37	16782.86	124.05
	2005	24.37	13.17	10.65	38.84	87.03	12.97	100.00	
	2010	4380.07	2351.83	1924.80	6567.90	15224.60	2268.47	17493.07	129.30
	2010	25.04	13.44	11.00	37.55	87.03	12.97	100.00	

137

Table 30. Heat Consumption by Sectors in the Krasnodar Krai *Scenario: revival*

Parameter	HEAT								Consumptio
	Units	Industry 10^3Gcal	Agricult 10^3Gcal	Transport 10^3Gcal	Resident 10^3Gcal	Final 10^3Gcal	Own Use 10^3Gcal	Total 10^3Gcal	Index '94=100
YEARS	1990	15127.27	769.93	704.20	8083.92	27552.45	848.25	28400.70	145.19
	1990	53.26	2.71	2.48	28.46	97.01	2.99	100.00	
	1993	10646.15	853.15	597.20	9600.00	22280.42	639.86	22920.28	117.17
	1994	9006.29	767.83	483.22	8660.14	19010.49	550.35	19560.84	100.00
	1995	8633.70	756.29	442.16	7711.71	17543.86	508.77	18052.63	92.29
	1995	47.83	4.19	2.45	42.72	97.18	2.82	100.00	
	1996	8618.49	710.38	440.68	7673.71	17443.27	505.85	17949.12	91.76
	1997	8940.31	715.31	456.37	8015.83	18127.82	525.71	18653.52	95.36
	1998	9265.06	720.16	471.97	8073.28	18530.47	537.38	19067.85	97.48
	1999	9594.16	724.84	488.08	8126.10	18933.18	549.06	19482.24	99.60
	2000	9850.56	734.16	509.74	8201.85	19296.31	559.59	19855.91	101.51
	2000	49.61	3.70	2.57	41.31	97.18	2.82	100.00	
	2001	10198.17	748.98	530.73	8339.38	19817.26	574.70	20391.97	104.25
	2002	10588.71	761.85	554.75	8507.98	20413.29	591.99	21005.27	107.38
	2003	10994.06	775.69	579.86	8608.14	20957.75	607.77	21565.52	110.25
	2004	11414.76	789.78	606.10	8714.95	21525.59	624.24	22149.84	113.24
	2005	11895.48	804.70	633.53	8828.71	22162.42	642.71	22805.13	116.59
	2005	52.16	3.53	2.78	38.71	97.18	2.82	100.00	
	2010	12638.09	849.44	682.27	8827.89	22997.70	666.93	23664.63	120.98
	2010	53.40	3.59	2.88	37.30	97.18	2.82	100.00	

Rates of growth of district heat consumption are a bit slower - 21 percent in 1994-2010. Heat demand even in 2010 will be lower than in 1990. Industrial heat demand is the major driving force behind this growth - industrial heat consumption grows by 19 percent in 1994-2010. The share of industrial district heat consumption in overall consumption will grow from 48 percent in 1995 to 52 percent in 2000 and to 53.3 percent in 2010.

Sensitivity analysis for Krasnodar Krai allows to make the following conclusions (see Table 31):

- fluctuations of economic growth rates by ±1% will bring variation of electricity demand by ±5% in 2010;
- price elasticity coefficient is a very substantial parameter for the projection;
- non-price promoted technical progress in improving energy efficiency is a very important factor. Absence of autonomous technical progress in energy efficiency will bring electricity demand up by 7.6 percent and heat demand up by 8.1 percent;
- further price growth after 2000 will provide a limited effect on electricity and heat demand;
- keeping electricity prices at the 2000 level against the background of other prices real growth by 3% per year will bring additional demand for electricity for 0.3 bln. kWh in 2010.

Table 31. Sensitivity Analisys of Economic Revival Scenario

		2000	2005	2010
Base assumptions	Electricity	14692	16783	17493
	D. heat	19856	22805	23665
Plus 1% of economic annual growth in 1995-2010	Electricity	14961	17459	18293
	D. heat	20298	23881	24885
Minus 1% of annual economic growth in 1995-2010	Electricity	14431	16152	16751
	D. heat	19427	21802	22533
Coefficient of price elasticity is - 0.1 since 1995	Electricity	13895	15852	16499
	D. heat	18895	21658	22446
No autonomous technical progress in efficiency by final consumption sectors	Electricity	15242	17922	18816
	D. heat	20642	24461	25577
Real energy price growth by 3% per year in 2001-2010	Electricity	14692	16624	17274
	D. heat	19856	22535	23312
Real energy price growth by 3% per year for all energy carriers with the exception of electricity	Electricity	14692	16872	17564
	D. heat	19856	22551	23337

134

Conclusion

Base assumptions in "depression" and "revival" scenarios give us electrisity demand range of 51.9-56.6 bln.kWh in North Caucasus and 13.7-14.7 bln.kWh in Krasnodar Krai in the year 2000 and relatively 62.1-68.5 bln.kWh and 16.5-17.5 bln.kWh in the year 2010. Heat demand will be 75.6-83.4 mln.Gcal in North Caucasus and 18.2-19.9 mln.Gcal in Krasnodar Krai in the year 2000 and correspondingly 90.9-101.1 mln.Gcal and 22-23.7 mln.Gcal in the year 2010.

Model simulation of future growth of electricity and heat demand in North Caucasus and Krasnodar Krai shows that electricity demand will go up to 49.9-59.0 bln. kWh in North Caucasus and to 13.0-15.2 billion kWh in Krasnodar Krai in the year 2000 and correspondingly to 58.7 - 74.4 billion kWh and 15.5 - 18.8 billion kWh in 2010. This range of uncertainty allows room for additional generation of local electric power to substitute imported electricity, replace obsolete facilities and satisfy grbwing demand.

Heat demand will grow up to 72.9-87.0 million Gcal in North Caucasus and 17.4-20.6 million GCal in Krasnodar Krai in the year 2000 and correspondingly 85,5-110.0 million Gcal and 20.9-25.6 Gcal in the year 2010. It will approach the 1990 level in 2004 in North Caucasus and in 2010 in Krasnodar Krai.

Such relatively large range of the projections uncertainty results from the uncertainty with the future economic development as well as from data shortage for the model calibration. It seems that this range covers all trajectories of future electricity and heat demand evolution foreseeable in North Caucasus and Krasnodar Krai for the coming 15 years.

135

References

1. Family in the Russian Federation. Federal Committee for Statistics, Russian Federation. Moscow, 1994. p. 439.
2. Living Conditions of Russia's Population. Federal Committee for Statistics, Russian Federation. Vol.2. Moscow, 1993. p. 618.
3. Russia - 1992: Market Conditions. Center for market conditions and forecasting. Moscow. November 1992. p. 190.
4. Russia - 1994: Market Conditions. Center for market conditions of the Government of the Russian Federation. Vol. 3. Moscow. September 1994. p. 238.
5. Material Resources of the Russian Federation in 1992. Federal Committee for Statistics, Russian Federation. Moscow. Republican information and publishing center. 1993. p. 233.
6. Capital Construction in the Russian Federation. Federal Committee for Statistics, Russian Federation. Moscow. 1994. p. 140.
7. Housing and Socio-Cultural Construction in the Russian Federation in 1993. Federal Committee for Statistics, Russian Federation. Moscow. 1994. p. 158.
8. Russian Federation. 1994. Statistical yearbook. Federal Committee for Statistics, Russian Federation. Moscow. p. 800.
9. Report on the Social and Economic Situation in Krasnodar Krai in 1994. Part II. Federal Committee for Statistics, Russian Federation. Krasnodar Krai Committee for Federal Statistics. Krasnodar. p. 78.
10. Report on the Economy of Krasnodar Krai in 1993. Part I. Federal Committee for Statistics, Russian Federation. Krasnodar Krai Committee for Federal Statistics. Krasnodar. p. 124.
11. Report on the Economy of Krasnodar Krai in 1993. Part II. Federal Committee for Statistics, Russian Federation. Krasnodar Krai Committee for Federal Statistics. Krasnodar. p. 93.
12. Report on the Economy of Krasnodar Krai in 1992. Part I. Federal Committee for Statistics, Russian Federation. Krasnodar Krai Committee for Federal Statistics. Krasnodar. p. 88.
13. Report on the Economy of Krasnodar Krai in 1992. Part II. Federal Committee for Statistics, Russian Federation. Krasnodar Krai Committee for Federal Statistics. Krasnodar. p. 73.
14. Social and Economic Situation in Cities and Regions of Krasnodar Krai (Statistical Yearbook). Federal Committee for Statistics, Russian Federation. Krasnodar Krai Committee for Federal Statistics. Krasnodar, 1994. p. 181.
15. Fuel and Energy Balance 1990. Federal Committee for Statistics.
16. 1991-1994 Statistic Formats 11-CH for Krasnodar Krai. Federal Committee for Statistics, Moscow.
17. Report on Energy Strategy of Russia - North Caucasus. ASOTEK, Moscow, 1993.
18. Report on the development of fuel and energy balance for Krasnodar Krai for the period up to 2010 coordinated with the Fuel and energy balance of the Russian Federation and North Caucasus. VNIIKTEP, Moscow, 1992.
19. Fuel and Energy Balances of North Caucasus and Krasnodar Krai for 1985, 1990, 1992 and 1993. INCOTEK, Moscow, 1995.

136

APPENDIX D

STATIC SCREENING OF ALTERNATIVE GENERATION OPTIONS FOR KRASNODAR KRAI

The attached spreadsheets present the detailed computations of generation costs for the various power generation options considered in this study.

KRASNODAR POWER PROJECT

STATIC SCREENING OF ALTERNATIVE GENERATION OPTIONS

HAGLER BAILLY CONSULTING, INC. 04:11 PM 03-Oct-95

GENERATION OPTIONS		
A	GT.300.K	2x150MW - Gas Turbines - Krasnodar
B	GT.600 K	4x150MW - Gas Turbines - Krasnodar
C	CC.450.K	1x450MW - Combined Cycle - Krasnodar
D	CC.900.K	2x450MW - Combined Cycle - Krasnodar
E	HP.450.K	1x450MW - CHP - Krasnodar
F	HP.900.K	2x450MW - CHP - Krasnodar
DISCOUNT RATE	%	15.00%
LEVELIZING PERIOD	YEARS	25

COMPUTATION OF EFFECTIVE CAPACITY

PARAMETER	UNITS	GT.300.K	GT.600 K	CC.450.K	CC.900.K	HP.450.K	HP.900.K
NOMINAL CAPACITY	MW	300	600	450	900	450	900
NET RATED CAPACITY	MW	300	600	450	900	400	800
CHP CAPACITY	GCAL/H	0	0	0	0	250	448
FORCED OUTAGE RATE	%	4.00%	4.00%	4.60%	4.60%	4.60%	4.60%
PLANNED MAINTENANCE	DAYS	25	25	25	25	25	25
AVAILABILITY	%	89.15%	89.15%	88.55%	88.55%	88.55%	88.55%
TRANSMISSION LOSS	MW	-8.70	-7.00	-8.50	-3.90	0.00	-8.50
EFFECTIVE RATING	MW	276.15	542	407	801	354	717

COMPUTATION OF ANNUAL CAPITAL COSTS

PARAMETER	UNITS	GT.300.K	GT.600 K	CC.450.K	CC.900.K	HP.450.K	HP.900.K
PLANT COST ON G.R.C.	$/KW	350	307	427	413	429	415
CHP CAPACITY COST	$1000/Gcal-H	0	0	0	0	43	43
TOTAL PLANT COST	M$	105	184	192	372	193	374
CHP PIPING COST	M$	0	0	0	0	0	0
CHP CAPITAL COST CREDIT	M$	0	0	0	0	11	19
GAS PIPELINE COST	M$	44	61	44	61	0	44
TRANSMISSION COST	M$	89	92	89	99	0	89
ADJUSTED PROJECT COST	M$	238	337	325	532	182	487
COMPUTATION OF PROJECT VALUE AT TIME OF COMMISSIONING							
YEAR FROM START	PERCENT OF CAPITAL COST INCURRED						
FIRST YEAR OF OPERATION	0	0.00	0	0	0	0	0
LAST YEAR OF CONSTRUCTION	1	70.00	70	40	40	40	40
YEAR BEFORE	2	30.00	30	45	30	45	30
YEAR BEFORE	3	0.00	0	15	20	15	20
YEAR BEFORE	4	0.00	0	0	10	0	10
YEAR BEFORE	5	0.00	0	0	0	0	0
TOTAL (MUST ADD TO 100)		100.00	100	100	100	100	100
FUTURE VALUE MULTIPLIER		1.1206	1.1206	1.1966	1.2457	1.1966	1.2457
FUTURE VALUE	M$	266.71	378	389	662	218	607
EFFECTIVE CAPITAL COST	$/KW	965.81	697	956	827	616	847
DEPRECIATION	YEARS	30.00	30	35	35	35	35
CAPITAL RECOVERY FACTOR		0.1523	0.1523	0.1511	0.1511	0.1511	0.1511
CAPITAL COST	$/KW-year	147.09	106	144	125	93	128

COMPUTATION OF OPERATION AND MAINTENANCE (O&M) EXPENSES

PARAMETER	UNITS	GT.300.K	GT.600 K	CC.450.K	CC.900.K	HP.450.K	HP.900.K
VARIABLE O&M	$/MWH	0.07000	0.07000	0.29000	0.29000	0.32000	0.32000
TRANSMISSION LOSS	$/KWH	-0.00057	-0.00023	-0.00024	-0.00006	0.000	0.000
FIXED ANNUAL PLANT O&M	$/KW	5.38000	5.38000	7.68000	7.13000	8.45000	8.45000
SOCIAL COST (FIXED)	$/KW	0.00	0.00	0.00	0.00	0.00	0.00
TOTAL FIXED COST	$/KW	5.38	5.38	7.68	7.13	8.45	8.45
EFFECTIVE FIXED COST	$/KW	5.84	5.96	8.49	8.01	10.74	10.61
CHP O&M CREDIT	M$/Year	0.00	0.00	0.00	0.00	0.86	1.54
HEAT TO DIST. SYSTEM	Gcal/KWH	0	0	0	0	706	624

COMPUTATION OF LEVELIZED FUEL COST							
		GT.300.K	GT.600 K	CC.450.K	CC.900.K	HP.450.K	HP.900.K
FUEL TYPE		GAS	GAS	GAS	GAS	GAS	GAS
BASE PRICE	$/M.BTU	1.40	1.40	1.40	1.40	1.40	1.40
ANNUAL ESCALATION	%	3.00%	3.00%	3.00%	3.00%	3.00%	3.00%
PRESENT VALUE FACTOR		6.46	6.46	6.46	6.46	6.46	6.46
LEVELIZING RATE	%	11.65%	11.65%	11.65%	11.65%	11.65%	11.65%
P.V.F. + ESCALATION		8.04	8.04	8.04	8.04	8.04	8.04
LEVELIZING FACTOR		1.24	1.24	1.24	1.24	1.24	1.24
LEVELIZED PRICE	$/M.BTU	1.741	1.741	1.741	1.741	1.741	1.741
HEATRATE	BTU/KWH	10080	10080	6561	6561	5269	5269
LEVELIZED FUEL COST	$/KWH	0.0175	0.0175	0.0114	0.0114	0.0084	0.0085

SUMMARY OF FIXED AND VARIABLE OPERATING EXPENSES WITH LEVELIZED FUEL							
		GT.300.K	GT.600 K	CC.450.K	CC.900.K	HP.450.K	HP.900.K
FIXED	$/KW-year	152.94	112	153	133	104	139
VARIABLE	$/KWH	0.0170	0.0174	0.0115	0.0117	0.0088	0.0088

LEVELIZED COST PER KWH PRODUCED							
CAPACITY FACTOR	Hours/year	GT.300.K	GT.600 K	CC.450.K	CC.900.K	HP.450.K	HP.900.K
0%	0	NA	NA	NA	NA	NA	NA
5%	438	0.3662	0.2735	0.3607	0.3153	0.2458	0.3252
10%	876	0.1916	0.1454	0.1861	0.1635	0.1273	0.1670
15%	1314	0.1334	0.1027	0.1279	0.1129	0.0878	0.1143
20%	1752	0.1043	0.0814	0.0988	0.0876	0.0680	0.0879
25%	2190	0.0869	0.0686	0.0813	0.0724	0.0562	0.0721
30%	2628	0.0752	0.0601	0.0697	0.0623	0.0483	0.0616
35%	3066	0.0669	0.0540	0.0614	0.0550	0.0426	0.0540
40%	3504	0.0607	0.0494	0.0551	0.0496	0.0384	0.0484
45%	3942	0.0558	0.0458	0.0503	0.0454	0.0351	0.0440
50%	4380	0.0520	0.0430	0.0464	0.0420	0.0325	0.0405
55%	4818	0.0488	0.0407	0.0432	0.0393	0.0303	0.0376
60%	5256	0.0461	0.0387	0.0406	0.0370	0.0285	0.0352
65%	5694	0.0439	0.0371	0.0383	0.0350	0.0270	0.0332
70%	6132	0.0420	0.0357	0.0364	0.0333	0.0257	0.0314
75%	6570	0.0403	0.0345	0.0348	0.0319	0.0246	0.0299
80%	7008	0.0389	0.0334	0.0333	0.0306	0.0236	0.0286
85%	7446	0.0376	0.0324	0.0320	0.0295	0.0227	0.0275
90%	7884	0.0364	0.0316	0.0309	0.0285	0.0219	0.0264
95%	8322	0.0354	0.0309	0.0299	0.0276	0.0212	0.0255
100%	8760	0.0345	0.0302	0.0289	0.0268	0.0206	0.0247

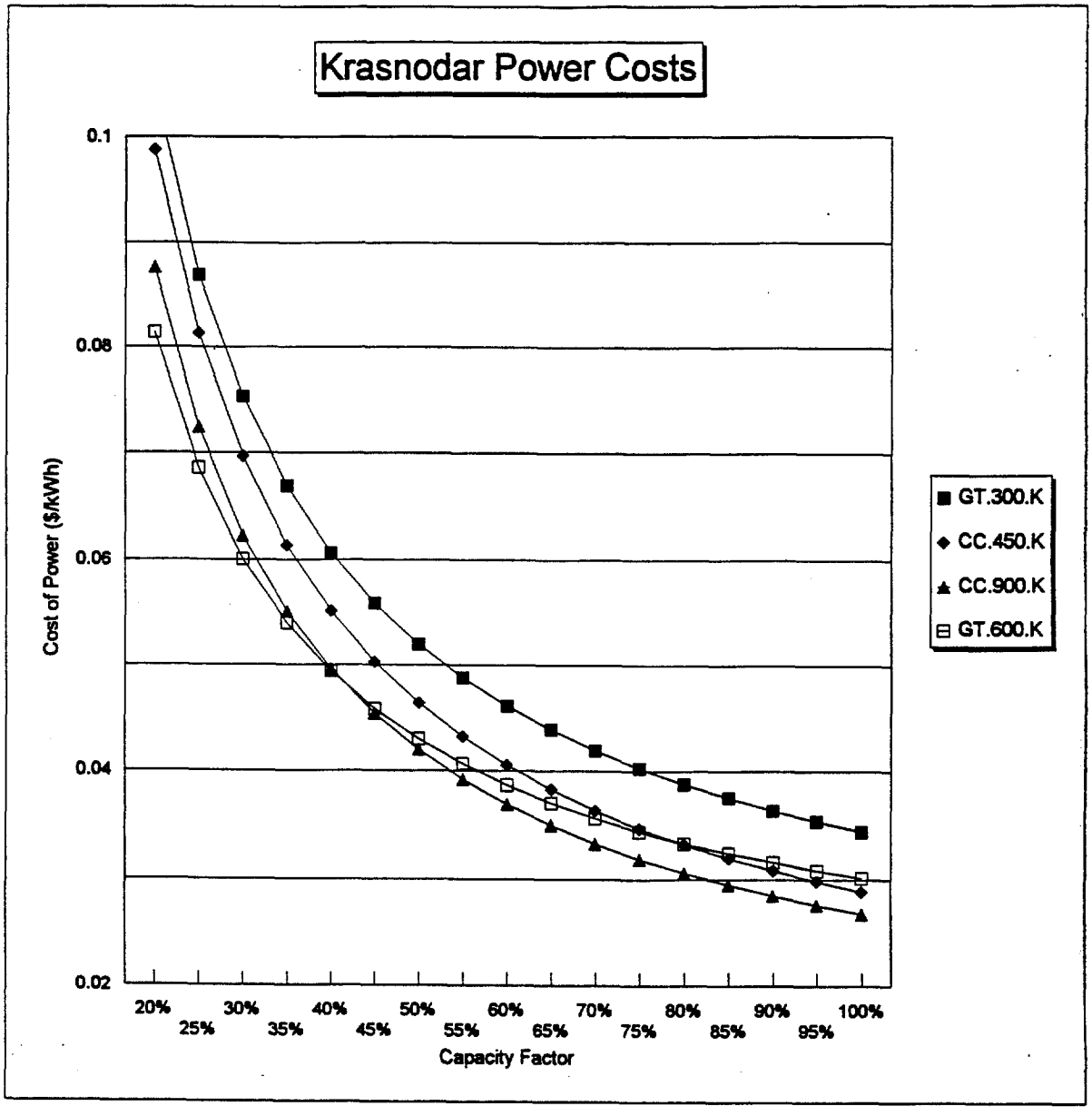
Krasnodar Power Costs
0.1
0.08
0.06
0.04
0.02
Cost of Power ($/kWh)
20%
25%
30%
35%
40%
45%
50%
55%
60%
65%
70%
75%
80%
85%
90%
95%
100%
Capacity Factor
GT.300.K
CC.450.K
CC.900.K
GT.600.K

KRASNODAR POWER PROJECT

STATIC SCREENING OF ALTERNATIVE GENERATION OPTIONS

HAGLER BAILLY CONSULTING, INC. 04:11 PM 03-Oct-95

GENERATION OPTIONS

A	GT.300.M	2x150MW - Gas Turbines - Mostovskoy
B	GT.600.M	4x150MW - Gas Turbines - Mostovskoy
C	CC.450.M	1x450MW - Combined Cycle - Mostovskoy
D	CC.900.M	2x450MW - Combined Cycle - Mostovskoy
E	CC.1350.M	3x450MW - Combined Cycle - Mostovskoy
F		

DISCOUNT RATE	%	15.00%
LEVELIZING PERIOD	YEARS	25

COMPUTATION OF EFFECTIVE CAPACITY

PARAMETER	UNITS	GT.300.M	GT.600.M	CC.450.M	CC.900.M	CC.1350.M
NOMINAL CAPACITY	MW	300	600	450	900	1350
NET RATED CAPACITY	MW	300	600	443	886	1330
CHP CAPACITY	GCAL/H	0	0	0	0	0
FORCED OUTAGE RATE	%	4.00%	4.00%	4.60%	4.60%	4.60%
PLANNED MAINTENANCE	DAYS	25	25	25	25	25
AVAILABILITY	%	89.15%	89.15%	88.55%	88.55%	88.55%
TRANSMISSION LOSS	MW	-4.80	-1.90	-3.80	10.50	24.50
EFFECTIVE RATING	MW	272	537	396	774	1153

COMPUTATION OF ANNUAL CAPITAL COSTS

PARAMETER	UNITS	GT.300.M	GT.600.M	CC.450.M	CC.900.M	CC.1350.M
PLANT COST ON G.R.C.	$/KW	367.00	317.00	479.00	446.00	430.00
CHP CAPACITY COST	$1000/GCAL-H	0.00	0.00	0.00	0.00	0.00
TOTAL PLANT COST	M$	110.10	190.20	215.55	401.40	580.60
CHP PIPING COST	M$	0.00	0.00	0.00	0.00	0.00
CHP CAPITAL COST CREDIT	M$	0.00	0.00	0.00	0.00	0.00
GAS PIPELINE COST	M$	24.00	34.00	24.00	34.00	38.00
TRANSMISSION COST	M$	84.00	86.30	84.00	105.00	192.00
ADJUSTED PROJECT COST	M$	218.10	310.50	323.55	540.40	810.50

COMPUTATION OF PROJECT VALUE AT TIME OF COMMISSIONING

YEAR FROM START		PERCENT OF CAPITAL COST INCURRED				
FIRST YEAR OF OPERATION	0	0	0	0	0	0
LAST YEAR OF CONSTRUCTION	1	70	70	40	40	40
YEAR BEFORE	2	30	30	45	30	30
YEAR BEFORE	3	0	0	15	20	20
YEAR BEFORE	4	0	0	0	10	10
YEAR BEFORE	5	0	0	0	0	0
TOTAL (MUST ADD TO 100)		100	100	100	100	100
FUTURE VALUE MULTIPLIER		1.1206	1.1206	1.1966	1.2457	1.2457
FUTURE VALUE	M$	244.41	347.96	387.17	673.16	1009.61
EFFECTIVE CAPITAL COST	$/KW	897.74	648.20	977.52	869.65	875.47
DEPRECIATION	YEARS	30.00	30.00	35.00	35.00	35.00
CAPITAL RECOVERY FACTOR		0.1523	0.1523	0.1511	0.1511	0.1511
CAPITAL COST	$/KW-year	136.73	98.72	147.74	131.43	132.31

COMPUTATION OF OPERATION AND MAINTENANCE (O&M) EXPENSES

PARAMETER	UNITS	GT.300.M	GT.600.M	CC.450.M	CC.900.M	CC.1350.M
VARIABLE O&M	$/MWH	0.07000	0.07000	0.29000	0.29000	0.29000
TRANSMISSION LOSS	$/KWH	-0.00031	-0.00006	-0.00011	0.00015	0.00024
FIXED ANNUAL PLANT O&M	$/KW	5.38000	5.38000	7.80000	7.24000	6.82000
SOCIAL COST (FIXED)	$/KW	0.00000	0.00000	0.00000	0.00000	0.00000
TOTAL FIXED COST	$/KW	5.38000	5.38000	7.80000	7.24000	6.82000
EFFECTIVE FIXED COST	$/KW	5.92833	6.01337	8.86186	8.41796	7.98370
CHP O&M CREDIT	M$/Year	0.000	0.000	0.000	0.000	0.000
HEAT TO DIST. SYSTEM	Gcal/KWH	0	0	0	0	0

COMPUTATION OF LEVELIZED FUEL COST						
		GT.300.M	GT.600.M	CC.450.M	CC.900.M	CC.1350.M
FUEL TYPE		GAS	GAS	GAS	GAS	GAS
BASE PRICE	$/M.BTU	1.40	1.40	1.40	1.40	1.40
ANNUAL ESCALATION	%	3.00%	3.00%	3.00%	3.00%	3.00%
PRESENT VALUE FACTOR		6.46	6.46	6.46	6.46	6.46
LEVELIZING RATE	%	11.65%	11.65%	11.65%	11.65%	11.65%
P.V.F. + ESCALATION		8.04	8.04	8.04	8.04	8.04
LEVELIZING FACTOR		1.24	1.24	1.24	1.24	1.24
LEVELIZED PRICE	$/M.BTU	1.741	1.741	1.741	1.741	1.741
HEATRATE	BTU/KWH	10080	10080	6561	6561	6561
LEVELIZED FUEL COST	$/KWH	0.0175	0.0175	0.0114	0.0114	0.0114

SUMMARY OF FIXED AND VARIABLE OPERATING EXPENSES WITH LEVELIZED FUEL						
		GT.300.M	GT.600.M	CC.450.M	CC.900.M	CC.1350.M
FIXED	$/KW-year	142.65	104.73	156.60	139.85	140.30
VARIABLE	$/KWH	0.0173	0.0176	0.0116	0.0119	0.0119

LEVELIZED COST PER KWH PRODUCED						
CAPACITY FACTOR	Hours/year	GT.300.M	GT.600.M	CC.450.M	CC.900.M	CC.1350.M
0%	0	NA	NA	NA	NA	NA
5%	438	0.3430	0.2567	0.3691	0.3312	0.3323
10%	876	0.1801	0.1371	0.1904	0.1715	0.1721
15%	1314	0.1259	0.0973	0.1308	0.1183	0.1187
20%	1752	0.0987	0.0773	0.1010	0.0917	0.0920
25%	2190	0.0824	0.0654	0.0831	0.0757	0.0760
30%	2628	0.0716	0.0574	0.0712	0.0651	0.0653
35%	3066	0.0638	0.0517	0.0627	0.0575	0.0577
40%	3504	0.0580	0.0474	0.0563	0.0518	0.0520
45%	3942	0.0535	0.0441	0.0513	0.0473	0.0475
50%	4380	0.0499	0.0415	0.0474	0.0438	0.0440
55%	4818	0.0469	0.0393	0.0441	0.0409	0.0411
60%	5256	0.0444	0.0375	0.0414	0.0385	0.0386
65%	5694	0.0424	0.0359	0.0391	0.0364	0.0366
70%	6132	0.0406	0.0346	0.0371	0.0347	0.0348
75%	6570	0.0390	0.0335	0.0354	0.0332	0.0333
80%	7008	0.0377	0.0325	0.0339	0.0318	0.0320
85%	7446	0.0365	0.0316	0.0326	0.0306	0.0308
90%	7884	0.0354	0.0308	0.0315	0.0296	0.0297
95%	8322	0.0344	0.0301	0.0304	0.0287	0.0288
100%	8760	0.0336	0.0295	0.0295	0.0278	0.0280

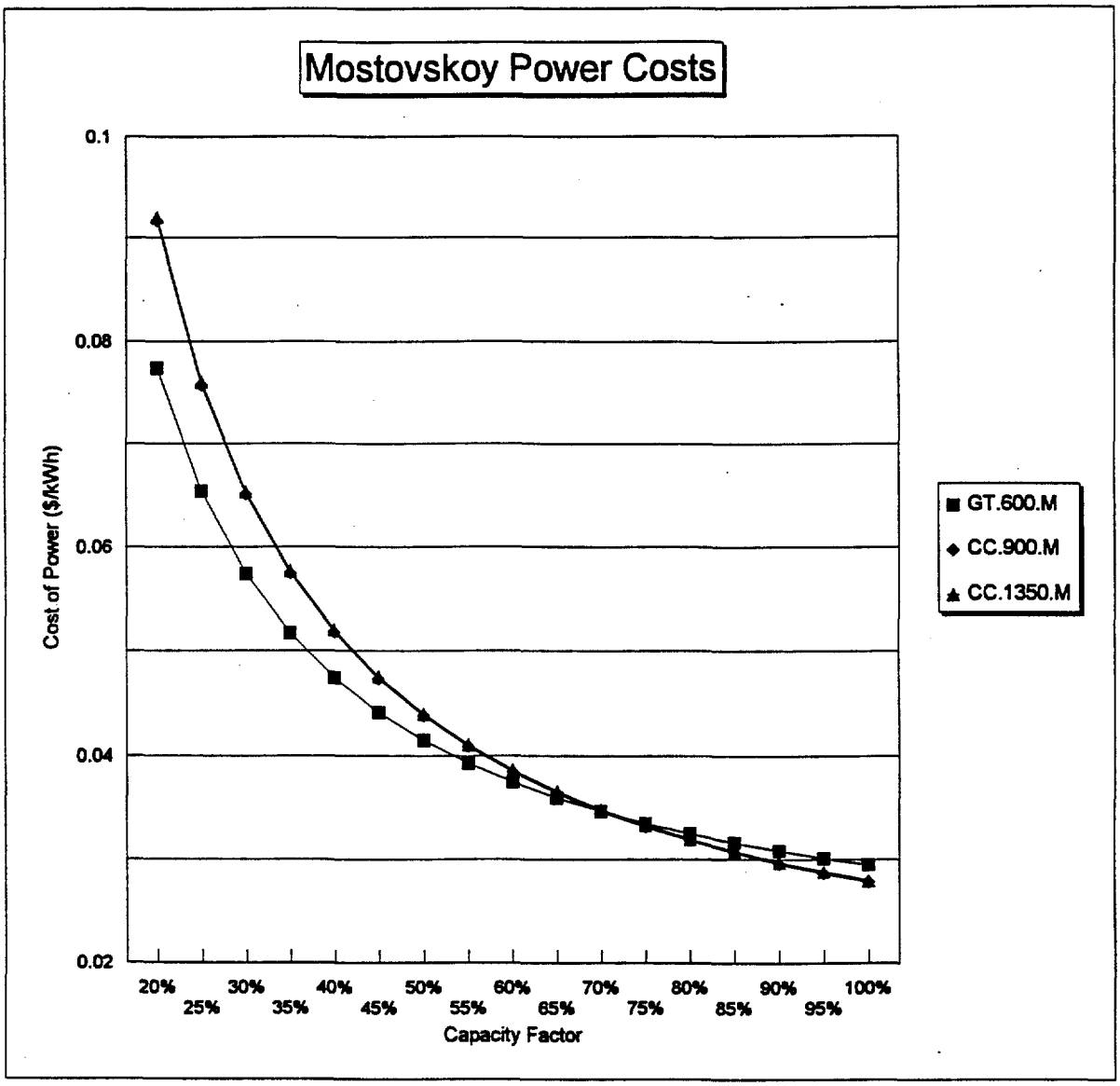
Mostovskoy Power Costs
0.1
0.08
0.06
0.04
0.02
Cost of Power ($/kWh)
20%
25%
30%
35%
40%
45%
50%
55%
60%
65%
70%
75%
80%
85%
90%
95%
100%
Capacity Factor
GT.600.M
CC.900.M
CC.1350.M

KRASNODAR POWER PROJECT

STATIC SCREENING OF ALTERNATIVE GENERATION OPTIONS

HAGLER BAILLY CONSULTING, INC. 04:11 PM

GENERATION OPTIONS

A	GT.300.N	2x150MW - Gas Turbines - Novorossiysk
B	GT.600.N	4x150MW - Gas Turbines - Novorossiysk
C	CC.450.N	1x450MW - Combined Cycle - Novorossiysk
D	HP.450.N	1x450MW - CHP - Novorossiysk
E		
F		

DISCOUNT RATE	%	15.00%
LEVELIZING PERIOD	YEARS	25

COMPUTATION OF EFFECTIVE CAPACITY

PARAMETER	UNITS	GT.300.N	GT.600.N	CC.450.N	HP.450.N		
NOMINAL CAPACITY	MW	300.00	600.00	450.00	450.00		
NET RATED CAPACITY	MW	300.00	600.00	443.00	393.00		
CHP CAPACITY	GCAL/H	0.00	0.00	0.00	172.50		
FORCED OUTAGE RATE	%	4.00%	4.00%	4.60%	4.60%		
PLANNED MAINTENANCE	DAYS	25.00	25.00	25.00	25.00		
AVAILABILITY	%	89.15%	89.15%	88.55%	88.55%		
TRANSMISSION LOSS	MW	-11.30	-12.70	-12.70	-12.20		
EFFECTIVE RATING	MW	278.75	547.60	404.98	360.20		

COMPUTATION OF ANNUAL CAPITAL COSTS

PARAMETER	UNITS	GT.300.N	GT.600.N	CC.450.N	HP.450.N		
PLANT COST ON G.R.C.	$/KW	355.00	312.00	479.00	481.00		
CHP CAPACITY COST	$1000/GCAL-H	0.00	0.00	0.00	43.00		
TOTAL PLANT COST	M$	106.50	187.20	215.55	216.45		
CHP PIPING COST	M$	0.00	0.00	0.00	5.88		
CHP CAPITAL COST CREDIT	M$	0.00	0.00	0.00	7.42		
GAS PIPELINE COST	M$	62.00	76.00	62.00	62.00		
TRANSMISSION COST	M$	19.50	28.00	23.00	23.00		
ADJUSTED PROJECT COST	M$	188.00	291.20	300.55	299.91		
COMPUTATION OF PROJECT VALUE AT TIME OF COMMISSIONING							
YEAR FROM START		PERCENT OF C	PERCENT OF CAPITAL COST INCURRED				
FIRST YEAR OF OPERATION	0	0.00	0.00	0.00	0.00		
LAST YEAR OF CONSTRUCTION	1	70.00	40.00	40.00	40.00		
YEAR BEFORE	2	30.00	45.00	45.00	45.00		
YEAR BEFORE	3	0.00	15.00	15.00	15.00		
YEAR BEFORE	4	0.00	0.00	0.00	0.00		
YEAR BEFORE	5	0.00	0.00	0.00	0.00		
TOTAL (MUST ADD TO 100)		100.00	100.00	100.00	100.00		
FUTURE VALUE MULTIPLIER		1.1206	1.1966	1.1966	1.1966		
FUTURE VALUE	M$	210.68	348.46	359.65	358.89		
EFFECTIVE CAPITAL COST	$/KW	755.80	636.34	888.07	996.35		
DEPRECIATION	YEARS	30.00	30.00	35.00	35.00		
CAPITAL RECOVERY FACTOR		0.1523	0.1523	0.1511	0.1511		
CAPITAL COST	$/KW-year	115.11	96.91	134.22	150.58		

COMPUTATION OF OPERATION AND MAINTENANCE (O&M) EXPENSES

PARAMETER	UNITS	GT.300.N	GT.600.N	CC.450.N	HP.450.N		
VARIABLE O&M	$/MWH	0.07000	0.07000	0.29000	0.32000		
TRANSMISSION LOSS	$/KWH	-0.00074	-0.00042	-0.00037	-0.00030		
FIXED ANNUAL PLANT O&M	$/KW	5.38000	5.38000	7.80000	8.45000		
SOCIAL COST (FIXED)	$/KW	1.78000	1.27000	1.58000	1.58000		
TOTAL FIXED COST	$/KW	7.16	6.65	9.38	10.03		
EFFECTIVE FIXED COST	$/KW	7.71	7.29	10.42	12.53		
CHP O&M CREDIT	M$/Year	0.000	0.000	0.000	0.593		
HEAT TO DIST. SYSTEM	Gcal/KWH	0	0	0	479		

144

COMPUTATION OF LEVELIZED FUEL COST							
		GT.300.N	GT.600.N	CC.450.N	HP.450.N		
FUEL TYPE		GAS	GAS	GAS	GAS		
BASE PRICE	$/MLBTU	1.40	1.40	1.40	1.40		
ANNUAL ESCALATION	%	3.00%	3.00%	3.00%	3.00%		
PRESENT VALUE FACTOR		6.46	6.46	6.46	6.46		
LEVELIZING RATE	%	11.65%	11.65%	11.65%	11.65%		
P.V.F. + ESCALATION		8.04	8.04	8.04	8.04		
LEVELIZING FACTOR		1.24	1.24	1.24	1.24		
LEVELIZED PRICE	$/MLBTU	1.741	1.741	1.741	1.741		
HEATRATE	BTU/KWH	10080	10080	6561	5269		
LEVELIZED FUEL COST	$/KWH	0.0175	0.0175	0.0114	0.0087		
SUMMARY OF FIXED AND VARIABLE OPERATING EXPENSES WITH LEVELIZED FUEL							
		GT.300.N	GT.600.N	CC.450.N	HP.450.N		
FIXED	$/KW-year	122.81	104.20	144.64	163.11		
VARIABLE	$/KWH	0.0169	0.0172	0.0113	0.0087		
LEVELIZED COST PER KWH PRODUCED							
CAPACITY FACTOR	Hours/year	GT.300.N	GT.600.N	CC.450.N	HP.450.N		
0%	0	NA	NA	NA	NA		
5%	438	0.2973	0.2551	0.3416	0.3811		
10%	876	0.1571	0.1362	0.1765	0.1949		
15%	1314	0.1103	0.0965	0.1214	0.1328		
20%	1752	0.0870	0.0767	0.0939	0.1018		
25%	2190	0.0730	0.0648	0.0774	0.0832		
30%	2628	0.0636	0.0569	0.0664	0.0708		
35%	3066	0.0569	0.0512	0.0585	0.0619		
40%	3504	0.0519	0.0469	0.0526	0.0552		
45%	3942	0.0480	0.0436	0.0480	0.0501		
50%	4380	0.0449	0.0410	0.0444	0.0459		
55%	4818	0.0424	0.0388	0.0414	0.0425		
60%	5256	0.0402	0.0370	0.0389	0.0397		
65%	5694	0.0384	0.0355	0.0367	0.0373		
70%	6132	0.0369	0.0342	0.0349	0.0353		
75%	6570	0.0356	0.0331	0.0334	0.0335		
80%	7008	0.0344	0.0321	0.0320	0.0320		
85%	7446	0.0334	0.0312	0.0308	0.0306		
90%	7884	0.0325	0.0304	0.0297	0.0294		
95%	8322	0.0316	0.0297	0.0287	0.0283		
100%	8760	0.0309	0.0291	0.0279	0.0273		

105

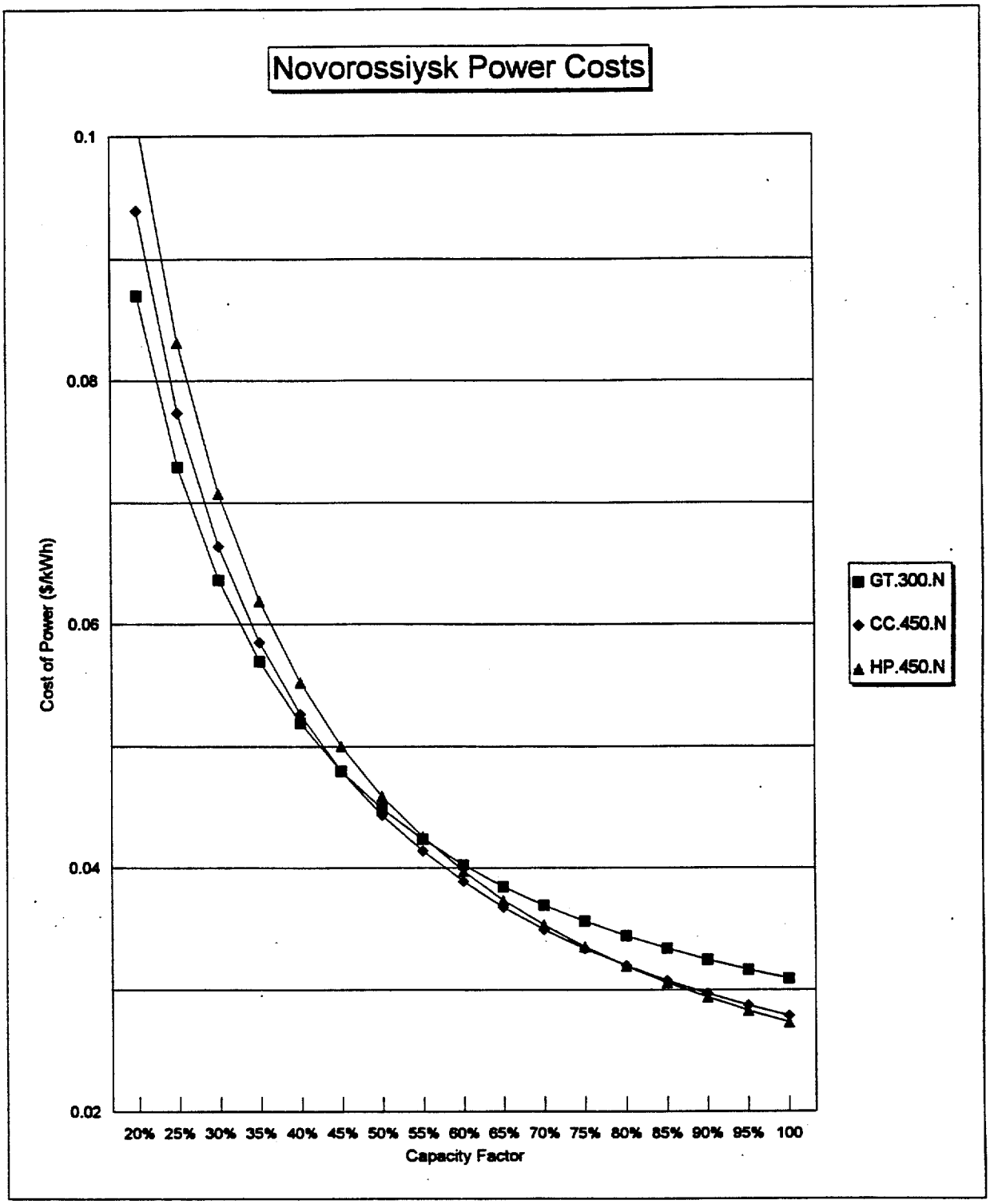
Novorossiysk Power Costs
0.1
0.08
0.06
0.04
0.02
Cost of Power ($/kWh)
20% 25% 30% 35% 40% 45% 50% 55% 60% 65% 70% 75% 80% 85% 90% 95% 100
Capacity Factor
GT.300.N
CC.450.N
HP.450.N

APPENDIX E

RESULTS OF INTEGRATED PLANNING MODEL AND POWER RELIABILITY ASSESSMENT MODEL ANALYSES

The attached are detailed explanations and results of the integrated planning and power reliability assessment model analyses performed as part of this study.

RESULTS OF INTEGRATED PLANNING MODEL ANALYSES FOR THE KRASNODAR POWER GENERATION PROJECT

1. Introduction

This appendix provides a summary of the results of the Integrated Planning Model (IPM©)analysis for the Krasnodar Power Generation Project. IPM is a dynamic linear programming model that provides a least cost capacity expansion plan for meeting electricity requirements. For this analysis, IPM was used to find the least cost plan for meeting electricity requirements in the North Caucasus region. In addition, a follow-up analysis was undertaken using ICF's Power Reliability Assessment Model (P-RAM©) to estimate the change in unserved energy that would result from the addition of a combined cycle plant at Mostovskoy.

As described in the main report, IPM was used to analyze six different scenarios: a base case, and five change cases. The results of the analysis clearly demonstrate that 1350 MW of combined cycle capacity should be built at the Mostovskoy site. For the array of cases analyzed, the gas fired capacity additions needed in the North Caucasus RPS range from 2970 MW to 4030 MW through 2005. The first section of this appendix summarizes the IPM capacity planning results. That is followed by a discussion of the reliability assessment analysis.

2. Integrated Planning Model Results

The data used to analyze each of these cases as detailed in this report included the following:

- Annual demand projections
- Typical hourly load profiles used to convert annual demand projections into hourly load estimates for each of the 8760 hours of the year
- Retirement schedules for existing plants
- Cost and performance characteristics for existing and potential power plants

Utilizing these input data, alternative potential plant sites and capacity types were evaluated. Three alternate sites were considered: Krasnodar, Mostovskoy, and Novorossiysk. For each site, simple cycle, combined cycle, and two-stage simple cycle-to-combined cycle conversion alternatives, were evaluated. IPM projected a capacity addition plan for the base case and each of the five change cases, as summarized in Tables 1 through 6. In the base case, a total of 4,030 MW should be added by 2005. Of this total, 400 MW of firm winter peaking capacity are

projected to be added at Krasnodar,[1] 1,350 MW at Mostovskoy, 600 MW in Novorossiysk, and 1680 MW at undetermined sites. In terms of capacity type, 600 MW of capacity additions are projected to be simple cycle turbines, 2130 MW are combined cycle turbines, and 1300 MW are simple cycle units that are converted to combined cycle plants.

The first uncommitted capacity additions in the base case are projected to be at Mostovskoy beginning in 1998, when a 300 MW simple cycle turbine is projected to be added. This 300 MW simple cycle will then be converted to a 450 MW combined cycle unit in 1999. A second 300 MW simple cycle turbine is also added at Mostovskoy in the year 1999. In 2000, a total of 750 MW of generation capacity is projected to be added. This includes conversion of the Mostovskoy 300 MW simple cycle turbine to a 450 MW combined cycle plant, the construction of an additional 450 MW combined cycle unit at Mostovskoy, and the first of four 150 MW simple cycle turbines at Novorossiysk.

In the sensitivity cases, the largest change in projected total capacity additions in the North Caucasus occurred in the low demand case, Change Case 1. In this case, total capacity additions are projected to be 1,050 MW lower than in the base case. In Change Cases 2 through 4, transmission capacity additions into the North Caucasus capacity were analyzed, total capacity additions decline by roughly the amount of firm transmission capacity assumed. In Change Case 5, in which the Rostov Nuclear plant is assumed to be completed, total capacity additions at the Mostovskoy site decline by 940 MW, which is the size of the Rostov nuclear plant.

In all of the change cases, the addition of 300 MW is called for at Mostovskoy in 1998. The timing of subsequent additions at that site varies with the individual change cases. Although the amount of capacity additions in the North Caucasus are reduced in the change cases due to transmission additions or a nuclear plant completion, 1350 MW of combined cycle capacity will be needed at the Mostovskoy location on, or before, 2005. In addition, at least 800 MW of combined cycle capacity additions are needed at the Mostovskoy on, or before, 2001 in all of the change cases. Considering the possible timing impacts of the events considered in the change cases, it is prudent to build the plant in two stages. The first stage, of 900 MW, should be commenced as soon as possible. The second should be 450 MW should be started when the timing for the addition becomes more certain.

With the exception of the already committed upgrading of the Krasnodar TETS plant, the installation of capacity at Mostovskoy was selected by the model as the next generation addition. This was so for all cases studied. Thus, the Integrated Planning Model analysis justifies the

[1] This Krasnodar capacity is treated in the model as committed capacity that will come on-line beginning in 1997.

immediate commencement of the staged building of a 1350 MW combined cycle power station at Mostovskoy as the next generation expansion project for the North Caucasus region.

3. Power Reliability Assessment Model Results

To complete the economic and financial analysis of the project, estimates of the amounts of electricity generated each year, and the generating corresponding costs are required. The value of electricity generated at the Mostovskoy plant has two components. First, electricity generated at Mostovskoy will displace more costly electricity generated at less efficient plants. Second, the Mostovskoy plant will meet some electricity requirements that would otherwise go unserved.

The IPM results provided total power generation estimates used to calculate the first component of the Mostovskoy plant's value. Specifically, IPM calculates the amount of electricity that will be generated by the Mostovskoy combined cycle plant. Using these estimates of the amount of annual generation and the difference in variable generation costs at Mostovskoy and the next most economical plant in the system the savings resulting more efficient generation has been calculated. However, IPM does not estimate the favorable change in unserved energy within the North Caucasus that would result from the construction of the Mostovskoy combined cycle plant. For this purpose, we used the Power Reliability Assessment Model. P-RAM estimated the loss of load probability and the amount of energy demand that goes unserved for each hour of the planning period.

P-RAM estimates the probability distribution of generation capacity for each hour of the planning year. This capacity probability distribution for a given hour is combined with a range of hourly load estimates that reflect load uncertainty to derive a loss of load probability. Generation capacity additions shift the capacity probability distribution to the right effectively reducing the probability of an outage. Based on this probabilistic approach, P-Ram estimates expected unserved energy.

For this analysis, P-RAM was run twice. In the first run, unserved energy was estimated, assuming that existing plants retire according to the schedule detailed in Appendix A, and that no new plants, other than committed units, are added. In the second run, unserved energy was estimated using the same retirement schedule, but here the Mostovskoy combined cycle plant was assumed to be completed to provide 900 MW by 2000. The P-RAM results for these two runs were analyzed to estimate the change in unserved energy attributable the Mostovskoy plant.

Table 7 and Table 8 provide the results of the P-RAM analysis for the base case and the low demand case. Column 2 of these tables presents the estimated annual electricity generation by the Mostovskoy plant over the period 1998 through 2035. Column 3 presents the change in unserved

150

energy attributable to the Mostovskoy plant as estimated by P-RAM. In the base case, the change in unserved energy was estimated to steadily increase so that by 2005 the entire output of the Mostovskoy plant will contribute to reductions in unserved energy. In the low demand case, that will occur in 2010.

151

TABLE 1
REFERENCE CASE
CAPACITY ADDITIONS (MW)

	1997	1998	1999	2000	2001	2002	2003 -2005	TOTAL
KRASNODAR								
SIMPLE CYCLE	0	0	0	0	0	0	0	0
COMBINED CYCLE	0	0	0	0	0	0	0	0
SIMPLE TO COMBINED CYCLE*	150	150	100	0	0	0	0	400
TOTAL	150	150	100	0	0	0	0	400
MOSTOVSKOY								
SIMPLE CYCLE	0	0	0	0	0	0	0	0
COMBINED CYCLE	0	0	0	450	0	60	1570	2080
SIMPLE TO COMBINED CYCLE	0	300	450	150	0	0	0	900
TOTAL	0	300	450	600	0	0	1600	2980
NOVOROSSIYSK								
SIMPLE CYCLE	0	0	0	150	260	190	0	600
COMBINED CYCLE	0	0	0	0	0	0	0	0
SIMPLE TO COMBINED CYCLE	0	0	0	0	0	0	0	0
TOTAL	0	0	0	150	260	190	0	600
OTHER LOCATIONS								
SIMPLE CYCLE	0	0	0	150	260	190	0	600
COMBINED CYCLE	0	0	0	450	0	0	1600	2080
SIMPLE TO COMBINED CYCLE	0	450	600	150	0	0	0	1350
TOTAL	150	450	600	750	260	190	1600	4030

*** Krasnodar capacity additions are committed units.**

152

TABLE 2
CHANGE CASE 1 - LOW DEMAND CASE
CAPACITY ADDITIONS (MW)

	1997	1998	1999	2000	2001	2002	2003 -2005	TOTAL
KRASNODAR								
SIMPLE CYCLE	0	0	0	0	0	0	0	0
COMBINED CYCLE	0	0	0	0	0	0	0	0
SIMPLE TO COMBINED CYCLE*	150	150	150	0	0	0	0	450
TOTAL	150	150	150	0	0	0	0	450
MOSTOVSKOY								
SIMPLE CYCLE	0	0	0	0	0	0	0	0
COMBINED CYCLE	0	0	0	270	180	0	570	1,020
SIMPLE TO COMBINED CYCLE	0	300	0	0	0	0	600	900
TOTAL	0	300	0	270	180	0	1,170	1,920
NOVOROSSIYSK								
SIMPLE CYCLE	0	0	0	0	140	130	330	600
COMBINED CYCLE	0	0	0	0	0	0	0	0
SIMPLE TO COMBINED CYCLE	0	0	0	0	0	0	0	0
TOTAL	0	0	0	0	140	130	330	600
ALL LOCATIONS								
SIMPLE CYCLE	0	0	0	0	140	130	330	600
COMBINED CYCLE	0	0	0	270	180	0	570	1,020
SIMPLE TO COMBINED CYCLE	150	450	150	0	0	0	600	1,350
TOTAL	150	450	150	270	320	130	1,500	2,970

*** Krasnodar capacity additions are committed units.**

153

TABLE 3
CHANGE CASE 2 - 500 MW TRANSMISSION LINE
CAPACITY ADDITIONS (MW)

	1997	1998	1999	2000	2001	2002	2003 -2005	TOTAL
KRASNODAR								
SIMPLE CYCLE	0	0	0	0	0	0	0	0
COMBINED CYCLE	0	0	0	0	0	0	0	0
SIMPLE TO COMBINED CYCLE*	150	150	150	0	0	0	0	450
TOTAL	150	150	150	0	0	0	0	450
MOSTOVSKOY								
SIMPLE CYCLE	0	0	0	0	0	0	0	0
COMBINED CYCLE	0	0	0	250	200	0	1180	1,630
SIMPLE TO COMBINED CYCLE	0	300	360	100	0	0	140	900
TOTAL	0	300	360	350	200	0	1,320	2,530
NOVOROSSIYSK								
SIMPLE CYCLE	0	0	0	40	60	250	250	600
COMBINED CYCLE	0	0	0	0	0	0	0	0
SIMPLE TO COMBINED CYCLE	0	0	0	0	0	0	0	0
TOTAL	0	0	0	40	60	250	250	600
ALL LOCATIONS								
SIMPLE CYCLE	0	0	0	40	60	250	250	600
COMBINED CYCLE	0	0	0	250	200	0	1,180	1,630
SIMPLE TO COMBINED CYCLE	150	450	510	100	0	0	140	1,350
TOTAL	150	450	510	390	260	250	1,570	3,580

*** Krasnodar capacity additions are committed units.**

154

TABLE 4
CHANGE CASE 3 - 1000 MW TRANSMISSION LINE
CAPACITY ADDITIONS (MW)

	1997	1998	1999	2000	2001	2002	2003 -2005	TOTAL
KRASNODAR								
SIMPLE CYCLE	0	0	0	0	0	0	0	0
COMBINED CYCLE	0	0	0	0	0	0	0	0
SIMPLE TO COMBINED CYCLE*	150	150	150	0	0	0	0	450
TOTAL	150	150	150	0	0	0	0	450
MOSTOVSKOY								
SIMPLE CYCLE	0	0	0	0	0	0	0	0
COMBINED CYCLE	0	0	0	300	150	0	860	1,310
SIMPLE TO COMBINED CYCLE	0	300	0	0	0	0	500	800
TOTAL	0	300	0	300	150	0	1,360	2,110
NOVOROSSIYSK								
SIMPLE CYCLE	0	0	0	0	110	250	240	600
COMBINED CYCLE	0	0	0	0	0	0	0	0
SIMPLE TO COMBINED CYCLE	0	0	0	0	0	0	0	0
TOTAL	0	0	0	0	110	250	240	600
ALL LOCATIONS								
SIMPLE CYCLE	0	0	0	0	110	250	240	600
COMBINED CYCLE	0	0	0	300	150	0	860	1,310
SIMPLE TO COMBINED CYCLE	150	450	150	0	0	0	500	1,250
TOTAL	150	450	150	300	260	250	1,600	3,160

*** Krasnodar capacity additions are committed units.**

155

TABLE 5
CHANGE CASE 4 - 1400 MW TRANSMISSION LINE
CAPACITY ADDITIONS (MW)

	1997	1998	1999	2000	2001	2002	2003 -2005	TOTAL
KRASNODAR								
SIMPLE CYCLE	0	0	0	0	0	0	0	0
COMBINED CYCLE	0	0	0	0	0	0	0	0
SIMPLE TO COMBINED CYCLE*	150	150	150	0	0	0	0	450
TOTAL	150	150	150	0	0	0	0	450
MOSTOVSKOY								
SIMPLE CYCLE	0	0	0	0	0	0	0	0
COMBINED CYCLE	0	0	0	90	210	0	1160	1,460
SIMPLE TO COMBINED CYCLE	0	240	160	0	0	0	350	750
TOTAL	0	240	160	90	210	0	1,510	2,210
NOVOROSSIYSK								
SIMPLE CYCLE	0	0	0	300	50	250	0	600
COMBINED CYCLE	0	0	0	0	0	0	0	0
SIMPLE TO COMBINED CYCLE	0	0	0	0	0	0	0	0
TOTAL	0	0	0	300	50	250	0	600
ALL LOCATIONS								
SIMPLE CYCLE	0	0	0	300	50	250	0	600
COMBINED CYCLE	0	0	0	90	210	0	1,160	1,460
SIMPLE TO COMBINED CYCLE	150	390	310	0	0	0	350	1,200
TOTAL	150	390	310	390	260	250	1,510	3,260

*** Krasnodar capacity additions are committed units.**

156

TABLE 6
CHANGE CASE 5 - COMPLETION OF ROSTOV NUCLEAR UNIT
CAPACITY ADDITIONS (MW)

	1997	1998	1999	2000	2001	2002	2003 -2005	TOTAL
KRASNODAR								
SIMPLE CYCLE	0	0	0	0	0	0	0	0
COMBINED CYCLE	0	0	0	0	0	0	0	0
SIMPLE TO COMBINED CYCLE*	150	150	150	0	0	0	0	450
TOTAL	150	150	150	0	0	0	0	450
MOSTOVSKOY								
SIMPLE CYCLE	0	0	0	0	0	0	0	0
COMBINED CYCLE	0	0	0	0	70	0	1070	1,140
SIMPLE TO COMBINED CYCLE	0	300	450	0	0	120	30	900
TOTAL	0	300	450	0	70	120	1,100	2,040
NOVOROSSIYSK								0
SIMPLE CYCLE	0	0	0	0	0	110	490	600
COMBINED CYCLE	0	0	0	0	0	0	0	0
SIMPLE TO COMBINED CYCLE	0	0	0	0	0	0	0	0
TOTAL	0	0	0	0	0	110	490	600
ALL LOCATIONS								
SIMPLE CYCLE	0	0	0	0	0	110	490	600
COMBINED CYCLE	0	0	0	0	70	0	1,070	1,140
SIMPLE TO COMBINED CYCLE	150	450	600	0	0	120	30	1,350
TOTAL	150	450	600	0	70	230	1,590	3,090

*** Krasnodar capacity additions are committed units.**

151

TABLE 7
BASE CASE - REGIONAL
GENERATION IMPACT OF THE MOSTOVSKOY PLANT

YEAR	ENERGY GENERATED (MWH)	CHANGE IN UNSERVED ENERGY (MWH)
1998	305,000	305,000
1999	3,267,000	1,353,000
2000	6,537,000	2,633,000
2001	7,002,000	3,364,000
2002	7,002,000	3,829,000
2003	7,002,000	4,755,000
2004	7,002,000	5,934,000
2005	7,002,000	6,630,000
2010	7,002,000	7,002,000
2015	7,002,000	7,002,000
2020	7,002,000	7,002,000
2025	7,002,000	7,002,000
2030	7,002,000	7,002,000
2035	7,002,000	7,002,000

TABLE 8
LOW DEMAND CASE REGIONAL
GENERATION IMPACT OF THE MOSSTOVSKOY PLANT

YEAR	ENERGY GENERATED (MWH)	CHANGE IN UNSERVED ENERGY (MWH)
1998	249,000	240,000
1999	2,994,000	902,000
2000	6,384,000	1,745,000
2001	7,002,000	2,469,000
2002	7,002,000	2,921,000
2003	7,002,000	3,801,000
2004	7,002,000	4,905,000
2005	7,002,000	5,690,000
2010	7,002,000	7,002,000
2015	7,002,000	7,002,000
2020	7,002,000	7,002,000
2025	7,002,000	7,002,000
2030	7,002,000	7,000,928
2035	7,002,000	7,000,928

CHAPTER 1
EXECUTIVE SUMMARY

The Krasnodar Krai region of southern Russia, which is part of the North Caucasus Unified Power System (UPS), has been experiencing electricity shortages and disruptions for the past few years. A group of Russian companies composed of Kubanenergo, RAO EES Rossii, Gasprom and others (Project Owners) is planning the Krasnodar Power Generation Project. This project will involve the construction of a 1350 MW combined-cycle power station at Mostovskoy. The project owners have requested the World Bank to provide funding for the project. The purpose of this study task (Task 1) is to verify that the proposed project is required to meet the energy demands of the region. Detailed business plans and technical and environmental feasibility studies are also underway for appraisal by the World Bank.

1.1 PROJECT JUSTIFICATION

The North Caucasus UPS has an acute electricity generation capacity deficit that is affecting the quality of supply. The system has a combined installed capacity of 10,557 MW, including 2,180 MW of hydro and 8,377 MW of fossil capacity. A considerable portion of this installed capacity has been de-rated due to age and deteriation in the quality of available fuel. Also, because some of the units within the region burn agricultural wastes, they are only available on a seasonal basis. This has resulted in effective available thermal capacity of 6597 MW. The maximum effective capacity (wet season) of the hydro units in North Caucasus is 1969 MW, as some of these units have also been derated. Due to seasonal effects not all of the installed hydro capacity in the region is available for meeting peak loads during the winter months; the available hydro capacity during the winter months is 1790 MW. This results in an effective system capacity of 8387 MW during winter, which is the period of the year when the annual peak load occurs.

In the past, the North Caucasus region received substantial quantities of power from Russia's Center UPS (through Ukraine) and additional power directly from generating plants within Ukraine. This interconnection became unreliable, and it is now no longer in operation. While a recent drop in consumption has provided some respite, the projected power deficit is expected to reach approximately 2,000 MW by 2000 unless new generating and transmission capacity is added to the system. This projection is baseed on the assumption that most of the aging existing capacity can be kept in operation for six or seven years.

100

The region with the greatest power deficit within the North Caucasus is the Krasnodar Krai, which relies on imports from neighboring Energos for 60% of its electricity consumption. Because the local utility, Kubanenergo, has equipment that is in general 20 to 40 years old, the deficit will deepen further as the aging units become less reliable and must ultimately be retired. To address this deficit, Kubanenergo is planning to install up to 800 MW of combined cycle capacity at Krasnodar, a 300 MW combined cycle plant at Novorossiysk, and another 1,350 MW combined cycle plant at Mostovskoy.

1.2 LEAST-COST PLAN

The purpose of Task 1 is to evaluate the proposed projects as potential elements of a least-cost investment program to address the electricity needs of the North Caucasus UPS, with emphasis on the Krasnodar Krai. The task involved a detailed assessment of the needs for electricity and district heating in the Krasnodar Krai, and an evaluation of the supply options available within the North Caucasus UPS and from neighboring power grids in Russia and Ukraine to determine the most economical plan to alleviate the North Caucasus' power shortage.

1.3 SUMMARY OF RESULTS

The North Caucasus is in need of substantial generation capacity additions in the immediate future. At this time, there is a program of Hydroelectric plant additions, totaling 160 MW, that is scheduled to bring capacity on line gradually between 1996 and 2000. In addition, a 500 kV transmission link with the Center UPS is scheduled to be completed in 1997. This will provide an additional 550 MW of firm capacity to the region. There is also a current program to replace 159 MW of aging boiler equipment and 190 MW of combustion turbines at the Krasnodar TETS site with a 400 MW CHP/Combined cycle plant. Even with these additions there is a pressing need for building new gas fired power plants.

This study has found that thermal generating capacity must be added in the North Caucasus as quickly as possible. The earliest date that new plants could be brought on line is 1998. At that time the capacity needed to maintain reliable a power supply will be 940 MW. The study has also determined the need for about 268 MW additional capacity in 1999, and for approximately 405 MW of capacity in 2000. It is therefore prudent that the proposed plan to build up to 1350 MW of combined-cycle capacity at Mostovskoy proceed on an accelerated schedule. This will be necessary to maintain a system reserve margin of 14 percent, which is the minimum for assuring reliable system operations. These additions would add a total of 1750 MW in gas fired capacity to the North Caucasus UPS during the next five years. Figure 1- 1 illustrates the need to add capacity in the region as demand grows and retirements reduce the capacity available from existing units. The data used in preparing Figure 1 -1 is presented in Table 1 - 1.

Because new and replacement capacity cannot be commissioned prior to 1998, a potential capacity shortage, ranging from 689 to1103 MW, will exist in the region through 1997. To eliminate the shortage, it will be necessary to extend the life of some of the units that have been scheduled to be retired through 1998. This is necessary because there is no practical possibility for adding new generating capacity before that year.

Regarding the location of the new capacity, Krasnodar Krai is the most appropriate area in the North Caucasus for substantial capacity additions because over 600 MW of existing capacity is scheduled to retire before the end of 2003, and the region is already heavily dependent on other regions for power. The current situation impairs the reliability of electricity service and results in excessive transmission losses. Of the three potential sites in the area, only the Mostovskoy site is available for the addition of new capacity in 1998 and, it is initially limited to the addition of simple cycle gas turbines due to construction lead time. The other two sites are expected to require an additional year or two of lead time because of the need for environmental studies to verify that they would be appropriate for building new power plants.

The Mostovskoy site offers a number of advantages, including its availability for early development. The site's only drawback is that it is not located near the major load centers in the region. The Krasnodar and Novorossiysk sites are located at major load centers, and they offer the potential for improved economic efficiency as Combined Heat and Power Plants (CHP). However, only the replacement of the older CHP units at Krasnodar TETS offers a lower cost alternative to the Mostovskoy project. Given that work is already proceeding for those replacements, the next project for the North Caucauses should be done at Mostovskoy. Recognizing the advantages of having plants located near load centers, it is likely that some smaller plant additions after 2000 will be attractive at Novorossiysk, subject to further investigation of the advantages of that site.

The following list gives a ranking of Combined Cycle options starting with the lowest cost alternative. The cost of electric power production includes the cost of new transmission facilities and gas pipelines as required for each site. Rankings have also been done for simple cycle plants; these appear in Chapter 5. (Production costs below are at 80% capacity factor):

Site	Capacity	Production Cost, $/kWh
Krasnodar CC/CHP (replacement)	400 MW	.0236
Mostovskoy CC	900 MW	.0318
Novorossiysk CC/CHP	400 MW	.0320
Novorossiysk CC	450 MW	.0320
Krasnodar CC	450 MW	.0333
Mostovskoy CC	450 MW	.0339

Considering all of the above factors the following is considered to be the best approach to meeting needs for immediate capacity additions while keeping the long term costs to a minimum:

162

1. Krasnodar - continue with the replacement of the two existing 95 MW simple cycle units in 1997 and 1999, with conversion to 400 MW of combined cycle in 1999.

2. Mostovskoy - construct 600 MW Simple cycle addition for 1998-99 operation, with conversion to combined cycle operation in 1999 or 2000 to bring the capacity at that site to 900 MW. Allow for the possibility to add another 450 MW of combined-cycle as early as 2000 depending on the rate of demand growth during the next few years.

3. Novorossiysk - provide 300 to 600 MW simple cycle for operation in 2001, with partial conversion to combined cycle if and when CHP operation is shown to economical or if additional base load capacity is needed.

The most efficient use of the existing and new resources available is optimized given:

- the resource mix
- unit operating characteristics (including heat rate, forced outage rates, full and minimum load unit ratings)
- operation, maintenance, and fuel costs.

The model is dynamic; that is, it develops a least-cost capacity plan for the entire forecast period at once. Decisions are made on the basis of minimizing the net present value of capital plus operating costs over the full planning horizon.

IPM© also incorporates seasonal factors into the optimization process. Seasonality is critical to realistic modeling, particularly with regard to the availability of reservoir and run-of-river hydro resources, the cost and operation of pumped storage plants, and the seasonal operation of combined heat and power units. It should be noted that capacity needs projected by the IPM Model are highter than those projected using the spreadsheet analysis method. The tables in Chapters 1 and 5 are based on the spreadsheet method, and they are considered to be more conservative than the IPM projections. This is because the IPM Model takes into consideration the reductions in output of hydro plants that occur druing the winter months.

4.2.3 Power Reliability Assessment Model (P-RAM)

To complete the economic and financial analysis of the potential generating projects, estimates of the amount of electricity generated and its value were required. The value of electricity generated at each proposed plant has two components. First, electricity generated will displace more costly electricity generated at less efficient plants. Secondly, the proposed plant will meet some electricity requirements that would otherwise go unserved.

The IPM results provided estimates that estimate the first component of a plant's value. Specifically, IPM estimated the amount of electricity that will be generated by a particular plant and the marginal cost of electric generation displaced by the plant. However, IPM does not estimate the change in unserved energy that would result from the construction of the plant. For this purpose, the study team utilized a power reliability assessment model. P-RAM is designed to estimate for each hour of a planning year the loss of load probability and the amount of unserved energy.

P-RAM estimates the probability distribution of generation capacity for each hour of the planning year. This capacity probability distribution for a given hour is combined with a range of hourly load estimates that reflect load uncertainty to derive a loss of load probability.

Generation capacity additions shift the capacity probability distribution to the right effectively reducing the probability of an outage. Based on this probabilistic approach, P-Ram estimates expected unserved energy.

For this analysis, P-RAM was run twice. In the first run, unserved energy was estimated assuming that existing plants retire according to the schedule detailed in Appendix A and that no new plants, other than committed units, are to be added. In the second run, unserved energy was estimated using the same retirement schedule, but in this case 900 MW of capacity at Mostovskoy is assumed to be completed. The P-RAM results for these two runs were analyzed to estimate the change in unserved energy attributable to the proposed plant. This analysis was done for the Base Case and the Low Demand change case.

4.2.4 Base Case and Change Cases Used in the IPM© Model

The following assumptions will be included in the base case of the IPM© modeling work:

A. One demand scenario (the Base demand) will be considered based on current indications that the Russian economy has begun to rebound.

B. The model will assume that the Rostov 1 nuclear power plant will not be completed.

C. The Mostovskoy plant site will be treated as an option for development, not as a committed project.

D. The model will assume that power will not be available from Ukraine, or from other regions of Russia via Ukrainian transmission lines.

E. Political turmoil in Chechnia will not have a lasting effect on the North Caucasus transmission grid.

F. The transmission capacity linking the North Caucasus to the Center UPS will be increased to 900 MW during 1997. Of that capacity, 750 MW will be committed as "firm capacity."

G. Existing plants will be retired after 40 years.

In addition to the base case evaluations, change case model runs will be conducted based on the following changes in the model's base assumptions:

A. An additional 500 MW of transmission capacity (450 MW of firm capacity) from the Center UPS will be added to the grid.

Gas Line Costs

Gas line costs are a major factor which affect all sites. The Mostovskoy site is not currently served with natural gas; a lateral of approximately 60 km to an existing gas trunk line will be needed to supply the plant. The cost of the lateral will be from $24 to 38 million depending on plant size. The cities of Krasnodar and Novorossiysk are currently served by gas lines; however, any significant increase in the needs for natural gas at either location will also require major capital investments for improving gas delivery. The only exception is the case of the 400 MW replacement plant at Krasnodar TETS, where gas is already supplied to the site. A 400 MW expansion of the Krasnodar TETS site would require gas pipeline improvement costs of $44 million, and a 900 MW expansion would require $61 million. At Novorossiysk, which is the greatest distance from the major gas trunk lines, extensive improvements for expanding the capacity of the existing gas supply pipeline would be required at costs ranging from $62 to 76 million, depending on the size of the plant.

The impact of gas pipeline investments on the cost of production for the Mostovskoy site will range from 0.0009 to 0.0043 $/kWh depending on the ultimate plant size; the impact at Krasnodar will range from zero to 0.0078 $/kWh, while the impact at Novorossiysk will vary from 0.0026 to about 0.0108 $/kWh.

Social Costs

Social costs only have an impact at Novorossiysk, since housing for the plant staff has already been constructed at Mostovskoy and the existing housing in the city of Krasnodar is considered to be adequate to accommodate the plant staff and their families. The impact at Novorossiysk was on the order of 0.0003 $/kWh for all plant sizes.

5.1.2 CHP Impact On Heat Rates

The opportunity to improve overall economic performance through the utilization of plant waste heat for district heating provides a distinct advantage to plants in or very near urban areas. The dual use of energy inputs that CHP units accomplish allow those plants to operate at effective heat rates that are substantially below comparable plants which do not make use of waste heat from the steam power cycle.

Both Krasnodar and Novorossiysk have district heating markets, and can take advantage of CHP plants. Mostovskoy is not an urban area and is not able to make use of the plant waste heat. In cases where CHP can be used, its heat rate advantage amounts to an average year-round savings of approximately 0.0008 $/kWh. In cases where a CHP plant is matched to meet a year-round base load heat demand the savings advantage can increase to approximately 0.0010 $/kWh. The high level of district heating use in Krasnodar makes it an attractive site for up to 1200 MW of CHP/Combined Cycle capacity. However, much of the demand for district heating in Krasnodar

A second time related factor that must be considered in selecting least cost options is the probable completion time of each of the plant options. Because there is a severe shortage of power in the region, economic losses are accumulating as a result of power curtailments. The sooner this situation is resolved the sooner the region will recover economically. This places a premium on plant options that can be brought on line quickly.

5.1.4 Replacement Projects

Replacement power projects offer substantial advantages over greenfield plants in cases where the construction of the replacement plant can occur while the existing units remain on line. The reasons include savings in land and infrastructure costs, the existence of the necessary transmission and fuel supply lines, and the absence of social costs that could result if workers at the existing sites were to become unemployed or have to move. This is the situation at the Krasnodar TETS site. The plant is currently scheduled to have a total capacity of 350 MW replaced over the period of 1998 to 1999 with a 400 MW Combined Cycle Plant. The replacement of that capacity with a state of the art CHP/Combined Cycle plant will provide a more economical option than any of the other plants considered in this study. This plant will be capable of supplying 400 MW of power while operating in a CHP mode and 450 MW when operated to obtain maximum electrical output. For this study, which is based on a winter peak electrical load, we have treated it as a 400 MW plant of firm capacity.

As the Krasnodar TETS plant is the only thermal site of any magnitude within Krasnodar Krai, it is the only candidate for replacement power. All other sites are considered to be greenfield sites. It is assumed that up to 400 MW additional capacity can be added adjacent to the Krasnodar TETS plant when 300 MW of the older CHP units are retired in 2003.

5.1.5 Static Screening Results

Combined Cycle Options

Combined cycle options fall into two categories: with and without district heating. The study has determined that CHP plants will offer advantages in cases where the annual district heat demand, that which is not already served by a CHP installation, is equal to approximately 60 percent of the annual heat generation capacity of the unit to be added. This condition is satisfied for a capacity equivalent to two 400 MW installations at Krasnodar (presumably one as a replacement of the existing units that are about to be retired and the second a new unit). At Novorossiysk, a single unit of 400 MW will exceed the current base load heat demand, so it would take full advantage of the CHP fuel savings opportunity for perhaps 8 to 10 years (see Figures 5.2 and 5.3). Once the CHP opportunities are satisfied, conventional Combined Cycle units will provide least cost options where base load capacity is needed. The following list gives a rank order of Combined Cycle options starting with the lowest cost alternative (Production costs are at 80% capacity factor):

Site	Capacity	Production Cost, $/kWh
Krasnodar CC/CHP	400 MW	.0236
Mostovskoy CC	900 MW	.0318
Novorossiysk CC/CHP	400 MW	.0320
Novorossiysk CC	450 MW	.0320
Krasnodar CC	450 MW	.0333
Mostovskoy CC	450 MW	.0339

Simple Cycle Options

The ranking of simple cycle options is more straight forward that for the Combined Cycle options. There are no similar plants scheduled for near term retirement, and there is no CHP alternative for this technology. The following list gives a rank order of 300 MW and 600 MW Combined Cycle options starting with the lowest cost alternative (Production costs are at 40% capacity factor.):

Site	Capacity	Production Cost, $/kWh
Novorossiysk	600 MW	0.0469
Mostovskoy	600 MW	0.0474
Krasnodar	600 MW	0.0494
Novorossiysk	300 MW	0.0519
Mostovskoy	300 MW	0.0580
Krasnodar	300 MW	0.0607

With the ranking information above decisions can be made based on the overall need for capacity in the region as to where to add plants and in what order.

5.2 RESULTS OF THE IPM ANALYSIS

The North Caucasus is in need of substantial generation capacity additions in the immediate future. At this time, there is a program of Hydroelectric plant additions, totaling 160 MW, that is scheduled to bring capacity on line gradually between 1996 and 2000. In addition, a 500 kV transmission link with the Center UPS is scheduled to be completed in 1997. This will provide an additional 550 MW of firm capacity to the region. There is also a current program to replace 159 MW of aging boiler equipment and 190 MW of combustion turbines at the Krasnodar TETS site with a 400 MW CHP/Combined cycle plant. The IPM analysis indicated that, even with these additions, there is a pressing need for building new gas fired power plants in the North Caucasus

is needed to determine if it would be cost effective.

1000 MW Transmission Reinforcement - This change case evaluated the impact of adding 1000 MW of capacity to provide 900 MW of firm capacity from the Center and Mid-Volga UPS's. This project is essentially the same as the previous case, except for its magnitude. It would reduce the capacity addition needs by 1000 MW over the study period. The same concerns exist regarding transmission losses and reliability. There is also a question as to whether ample sources of low cost power will be available from the Center and Mid-Volga UPS's to satisfy this added demand. Further study is also needed for this option.

Reestablishment of Transmission via Ukraine - Prior to the break-up of the USSR, and for some time thereafter, up to 1400 MW, of which 700 MW was firm capacity power that was generated at nuclear plants in the Center UPS was transmitted to the North Caucasus via the Ukraine grid. This practice was discontinued due to frequency control and reliability problems within the Ukraine transmission system. While the possibility exists to reestablish this link, there are serious technical and political problems in the way. It is highly unlikely that transmission via Ukraine could be restored prior to 1999; but if it reestablished in that year it would eliminate the need to provide fossil capacity additions during 1999 and 2000.

Rostov 1 - The work on the Rostov nuclear plant is currently suspended due to public concern about its safety and lack of funds. Minatom is endeavoring to get approvals to complete this 1000 MW plant, and may succeed in doing so by as early as 2000. While this addition of 947 MW of firm capacity would result in eliminating the need for fossil capacity additions from 2000 to 2003, it does not displace need for added capacity in the near term.

5.2.3 IMPLICATIONS OF CHANGE CASES

In the sensitivity cases, the largest change in projected total capacity additions in the North Caucasus occurred in the low demand case, Change Case 1. In this case, total capacity additions are projected to be 1,050 MW lower than in the base case. In Change Cases 2 through 4, transmission capacity additions into the North Caucasus capacity were analyzed, total capacity additions decline by roughly the amount of firm transmission capacity assumed. In Change Case 5, in which the Rostov Nuclear plant is assumed to be completed, total capacity additions at the Mostovskoy site decline by 940 MW, which is the size of the Rostov nuclear plant.

In all of the change cases, the addition of 300 MW is called for at Mostovskoy in 1998. The timing of subsequent additions at that site varies with the individual change cases. Although the amount of capacity addition requirements in the North Caucasus are reduced in the change cases due to transmission additions or a nuclear plant completion, 1350 MW of combined cycle capacity will be needed at the Mostovskoy location on, or before, 2005. In addition, at least 800 MW of combined cycle capacity additions are needed at the Mostovskoy on, or before, 2001 in all of the change cases.

169

Considering the possible timing impacts of the events considered in the change cases, it is prudent to build the plant in two stages. The first stage, of 900 MW, should be commenced as soon as possible. The second should be 450 MW should be started when the timing for the addition becomes more certain.

With the exception of the already committed upgrading of the Krasnodar TETS plant, the installation of capacity at Mostovskoy was selected by the model as the next generation addition. This was so for all cases studied. Thus, the Integrated Planning Model analysis justifies the immediate commencement of the staged building of a 1350 MW combined cycle power station at Mostovskoy as next generation expansion project for the North Caucasus region.

5.3 SELECTION OF PREFERRED SITES IN KRASNODAR KRAI

Regarding the location of the new capacity, Krasnodar Krai is the most appropriate area in the North Caucasus for major capacity additions because over 600 MW of existing capacity is scheduled to retire before 2005 and the region is already heavily dependent on other regions for power. Of the three potential sites in the area, only the Mostovskoy site is available for the addition of new capacity in 1998 and, it is limited to the addition of simple cycle gas turbines due to construction lead time concerns. The other two sites are expected to require an additional year or two of lead time because of the need for environmental studies to verify that they would be appropriate for building new power plants. The impact of unserved demand is noted in Section 4.3.4 as $14.6 kW. When this is taken into account, the two year lead time advantage of Mostovskoy translates into a savings of $.0009kW/h for the combined cycle options and $.0014/kWh for the simple cycle options. (The figures shown in Section 4.6 above have not been adjusted to account for this, as they are not date specific. However, in determining the cost advantages of projects on specific schedules, they should be included.)

that

The Mostovskoy site offers a number of advantages including its availability for early development. The site's only drawback is that it is not located near the major load centers in the region. The Krasnodar and Novorossiysk sites are located at major load centers, which reduces transmission costs, and they offer the opportunity for improved economic efficiency through their use as Combined Heat and Power Plants. However, only the replacement of the older CHP units at Krasnodar TETS offers a lower cost alternative to the Mostovskoy project. Givent hat work is already proceeding for those replacements, the next project for the North Caucauses should be done at Mostovskoy. Recognizing the advantages of having plants located near load centers, it is likely that some smaller plant additions after 2000 will be attractive at Novorossiysk, subject to further investigation of the advantages of that site.

Considering all of the above factors the following is considered to be the best approach to meeting needs for immediate capacity additions while keeping the long term costs to a minimum:

Krasnodar - continue with the replacement of the two existing 95 MW simple cycle units in 1997 and 1999, with conversion to combined cycle in 1999. This will give a winter peaking capacity of 400 MW.

Mostovskoy - construct 600 MW Simple cycle addition for 1998-99 operation, with conversion to combined cycle operation in 1999 or 2000 to bring the capacity at that site to 900 MW. Allow for the possibility to add another 450 MW of combined-cycle as early as 2000 depending on the rate of demand growth during the next few years.

Novorossiysk - provide 300 to 600 MW simple cycle for operation in 2001, with partial conversion to combined cycle if and when CHP operation is shown to economical or if additional base load capacity is needed.

This will bring the capacity in the Kubanenergo RPS up to 2366 MW (assuming that 900 MW is built at Mostovskoy); this would amount to approximately 22% of the total capacity in the North Caucasus IPS which compares favorably with Kubanenergo's average share of 27% of overall electricity consumption, given that the region does not have substantial hydro resources.

Below is the recommended sequence for capacity additions for Krasnodar Krai based on modelling results, and the use of standardized plant capacity increments of 300 MW for simple cycle additions and 450 MW for combined cycle additions:

Table 5-3
Recommended Capacity Additions for Krasnodar Krai

Year	Capacity Addition	Technology	Location
1997	150 MW	Simple Cycle	Krasnodar
1998	300 MW	Simple Cycle	Mostovskoy
1999	150 MW	Simple Cycle	Krasnodar
	100 MW	Steam Cycle Add-on	Krasnodar
	150 MW	Steam Cycle Add-on	Mostovskoy
	300 MW	Simple Cycle	Mostovskoy
2000	150 MW	Steam Cycle Add-on	Mostovskoy

	300 MW	Simple Cycle	Novorossiysk
2001	300 MW	Simple Cycle	Novorossiysk or Mostovskoy
TOTAL	1900 MW		

5.4.1 CHANGE IN UNSERVED ENERGY

IPM was not used to estimate the change in unserved energy that would result from the construction of the Mostovskoy combined cycle plant. For this purpose, we utilized the Power Reliability Assessment Model. P-RAM has been designed to estimate for each hour of a planning year the loss of load probability and the amount of unserved energy.

P-RAM estimated the probability distribution of generation capacity for each hour of the planning year. This capacity probability distribution for a given hour was combined with a range of hourly load estimates that reflect load uncertainty to derive a loss of load probability. Generation capacity additions improve the capacity probability distribution thereby reducing the probability of an outage. Based on this probabilistic approach, P-RAM estimated expected unserved energy.

For this analysis, P-RAM was run twice. In the first run, unserved energy was estimated assuming that existing plants retire according to the schedule detailed in Appendix A, and that no new plants, other than committed units, were added to the grid. In the second run, unserved energy was estimated using the same retirement schedule, but in this case the Mostovskoy combined cycle plant was assumed to be completed. The P-RAM results for these two runs were analyzed to estimate the change in unserved energy attributable to the Mostovskoy plant.

Table 5-4 provides the results of the P-RAM analysis for the base case. Column 2 shows the estimated electricity generated by the Mostovskoy plant over the period 1998 through 2035. Column 3 presents the change in unserved energy attributable to the Mostovskoy plant as estimated by P-RAM. In the base case, the change in unserved energy was estimated to rise over time such that by 2005 nearly the entire output of the Mostovskoy plant will lead to reductions in unserved energy.

2020

178

TABLE 5-4 GENERATION IMPACT OF THE MOSTOVSKOY PLANT Base Case		
	ENERGY GENERATED (MWh)	CHANGE IN UNSERVED ENERGY (MWh)
1998	305,000	305,000
1999	3,266,000	1,353,000
2000	6,536,000	2,633,000
2001	7,002,000	3,364,000
2002	7,002,000	3,829,000
2003	7,002,000	4,755,000
2004	7,002,000	5,934,000
2005	7,002,000	6,630,000
2010	7,002,000	7,002,000
2015	7,002,000	7,002,000
2020	7,002,000	7,002,000

5.4.2. PRODUCTION COST SAVINGS

A certain amount of the electricity generated at Mostovskoy will result in reduced generation costs within the regional power system. The portion of the power produced by the plant that does not represent otherwise unserved demand, will displace more costly electricity generated at less efficient plants. That quantity is the difference between columns 2 and 3 in Table 5-4. The value of the savings can be conservatively estimated the using difference between variable cost of production at Mostovskoy and at the next most economical plant. The table below indicates the difference in production costs between the Mostovskoy 900 MW combined cycle plant and average cost of production at the gas fired CPP plants in the North Caucasus RPS. The values are in terms of 1998 production costs. (Because there is a total of 3253 MW of gas fired CPP capacity in the region, it represents a very close approximation of the marginal cost of production for the system would be without Mostovskoy.)

Table 5-5
Differential Energy Production Costs
Mostovskoy versus Most Economical Alternative

	Fuel Cost, $/kwh	Variable O&M, $/kwh	Total Variable Cost, $/kwh
Mostovskoy	0.0114	0.0005	0.0119
Gas fired CPP*	0.0121	0.0011	0.0132
Difference			0.0013

*from JEPAS determination of average generation costs.

As can be seen in the table, generation at Mostovskoy in lieu generation elsewhere will yield an average savings of $0.0013 per KWH. The approximate value of these savings are shown below for the years 1999 through 2005:

Table 5-6
Calculation of Generation Cost Savings

Year	Differential Generation, GWH	Savings, $ Millions
1999	1913	2.49
2000	3903	5.07
2001	3638	4.73
2002	3173	4.12
2003	2247	2.92
2004	1068	1.39
2005	372	0.48

5.5 QUALIFICATIONS REGARDING ASSUMPTIONS

Mostovskoy's Timing Advantage - It should be noted that while Mostovskoy is not the lowest cost plant for simple cycle options, it is very close in terms of life costs to the least cost option. When this is considered in light of the fact that it can be brought online to relieve the current power shortage in the region one to two years earlier than the alternatives, Mostovskoy can also be regarded as the least cost option for providing near term peaking capacity.

Novorossiysk Plant Site - Although a potential site for a power plant in Novorossiysk has been identified, no site investigations have been performed. An assessment of the district heating system in Novorossiysk, and the use of a new power plant as a source for a centralized district heating system needs to be evaluated. Investigation of sources of water supply, waste water disposal and potential environmental impacts need to addressed in a detailed feasibility study. In view of the above, it is considered that a new plant at Novorossiysk could not be constructed before the year 2000.

Small Scale Plants Not Evaluated - Small scale plants (75 to 200 MW) at locations such as Sochi, Temyruk and elsewhere were not considered in this study. Because of the pressing need for large scale additions of generating capacity in the region the study focused on plants of 300 MW and larger. There are however sites, primarily at the extreme ends of the grid, that may be good choices for small scale plants that would substantially improve local power reliability and reduce line losses. It may be worth to identify and evaluate these options in a more comprehensive study of the region's needs for power generation.

CHP Requirements - This study has made certain assumptions regarding the demand for district heat. These assumptions yield favorable indications of potential cost savings for the CHP/Combined cycle plants that could be installed in Krasnodar and Novorossiysk. There is considerable speculation regarding the future need for maintaining district heat production capacity at levels that are comparable to current day levels. It is the opinion of some experts who have studied the district heating practices in Russia that considerable savings could be obtained through conservation and efficiency improvement measures. Before commitments are made for adding CHP capacity in the region a detailed evaluation of the potential for reducing district heating needs through demand side management programs should be undertaken.

RESULTS OF INTEGRATED PLANNING MODEL ANALYSES FOR THE KRASNODAR POWER GENERATION PROJECT

1. Introduction

This appendix provides a summary of the results of the Integrated Planning Model (IPM©)analysis for the Krasnodar Power Generation Project. IPM is a dynamic linear programming model that provides a least cost capacity expansion plan for meeting electricity requirements. For this analysis, IPM was used to find the least cost plan for meeting electricity requirements in the North Caucasus region. In addition, a follow-up analysis was undertaken using ICF's Power Reliability Assessment Model (P-RAM©) to estimate the change in unserved energy that would result from the addition of a combined cycle plant at Mostovskoy.

As described in the main report, IPM was used to analyze six different scenarios: a base case, and five change cases. The results of the analysis clearly demonstrate that 1350 MW of combined cycle capacity should be built at the Mostovskoy site. For the array of cases analyzed, the gas fired capacity additions needed in the North Caucasus RPS range from 2970 MW to 4030 MW through 2005. The first section of this appendix summarizes the IPM capacity planning results. That is followed by a discussion of the reliability assessment analysis.

2. Integrated Planning Model Results

The data used to analyze each of these cases as detailed in this report included the following:

- Annual demand projections
- Typical hourly load profiles used to convert annual demand projections into hourly load estimates for each of the 8760 hours of the year
- Retirement schedules for existing plants
- Cost and performance characteristics for existing and potential power plants

Utilizing these input data, alternative potential plant sites and capacity types were evaluated. Three alternate sites were considered: Krasnodar, Mostovskoy, and Novorossiysk. For each site, simple cycle, combined cycle, and two-stage simple cycle-to-combined cycle conversion alternatives, were evaluated. IPM projected a capacity addition plan for the base case and each of the five change cases, as summarized in Tables 1 through 6. In the base case, a total of 4,030 MW should be added by 2005. Of this total, 400 MW of firm winter peaking capacity are

projected to be added at Krasnodar,[1] 1,350 MW at Mostovskoy, 600 MW in Novorossiysk, and 1680 MW at undetermined sites. In terms of capacity type, 600 MW of capacity additions are projected to be simple cycle turbines, 2130 MW are combined cycle turbines, and 1300 MW are simple cycle units that are converted to combined cycle plants.

The first uncommitted capacity additions in the base case are projected to be at Mostovskoy beginning in 1998, when a 300 MW simple cycle turbine is projected to be added. This 300 MW simple cycle will then be converted to a 450 MW combined cycle unit in 1999. A second 300 MW simple cycle turbine is also added at Mostovskoy in the year 1999. In 2000, a total of 750 MW of generation capacity is projected to be added. This includes conversion of the Mostovskoy 300 MW simple cycle turbine to a 450 MW combined cycle plant, the construction of an additional 450 MW combined cycle unit at Mostovskoy, and the first of four 150 MW simple cycle turbines at Novorossiysk.

In the sensitivity cases, the largest change in projected total capacity additions in the North Caucasus occurred in the low demand case, Change Case 1. In this case, total capacity additions are projected to be 1,050 MW lower than in the base case. In Change Cases 2 through 4, transmission capacity additions into the North Caucasus capacity were analyzed, total capacity additions decline by roughly the amount of firm transmission capacity assumed. In Change Case 5, in which the Rostov Nuclear plant is assumed to be completed, total capacity additions at the Mostovskoy site decline by 940 MW, which is the size of the Rostov nuclear plant.

In all of the change cases, the addition of 300 MW is called for at Mostovskoy in 1998. The timing of subsequent additions at that site varies with the individual change cases. Although the amount of capacity additions in the North Caucasus are reduced in the change cases due to transmission additions or a nuclear plant completion, 1350 MW of combined cycle capacity will be needed at the Mostovskoy location on, or before, 2005. In addition, at least 800 MW of combined cycle capacity additions are needed at the Mostovskoy on, or before, 2001 in all of the change cases. Considering the possible timing impacts of the events considered in the change cases, it is prudent to build the plant in two stages. The first stage, of 900 MW, should be commenced as soon as possible. The second should be 450 MW should be started when the timing for the addition becomes more certain.

With the exception of the already committed upgrading of the Krasnodar TETS plant, the installation of capacity at Mostovskoy was selected by the model as the next generation addition. This was so for all cases studied. Thus, the Integrated Planning Model analysis justifies the

[1] This Krasnodar capacity is treated in the model as committed capacity that will come on-line beginning in 1997.

immediate commencement of the staged building of a 1350 MW combined cycle power station at Mostovskoy as the next generation expansion project for the North Caucasus region.

3. Power Reliability Assessment Model Results

To complete the economic and financial analysis of the project, estimates of the amounts of electricity generated each year, and the generating corresponding costs are required. The value of electricity generated at the Mostovskoy plant has two components. First, electricity generated at Mostovskoy will displace more costly electricity generated at less efficient plants. Second, the Mostovskoy plant will meet some electricity requirements that would otherwise go unserved.

The IPM results provided total power generation estimates used to calculate the first component of the Mostovskoy plant's value. Specifically, IPM calculates the amount of electricity that will be generated by the Mostovskoy combined cycle plant. Using these estimates of the amount of annual generation and the difference in variable generation costs at Mostovskoy and the next most economical plant in the system the savings resulting more efficient generation has been calculated. However, IPM does not estimate the favorable change in unserved energy within the North Caucasus that would result from the construction of the Mostovskoy combined cycle plant. For this purpose, we used the Power Reliability Assessment Model. P-RAM estimated the loss of load probability and the amount of energy demand that goes unserved for each hour of the planning period.

P-RAM estimates the probability distribution of generation capacity for each hour of the planning year. This capacity probability distribution for a given hour is combined with a range of hourly load estimates that reflect load uncertainty to derive a loss of load probability. Generation capacity additions shift the capacity probability distribution to the right effectively reducing the probability of an outage. Based on this probabilistic approach, P-Ram estimates expected unserved energy.

For this analysis, P-RAM was run twice. In the first run, unserved energy was estimated, assuming that existing plants retire according to the schedule detailed in Appendix A, and that no new plants, other than committed units, are added. In the second run, unserved energy was estimated using the same retirement schedule, but here the Mostovskoy combined cycle plant was assumed to be completed to provide 900 MW by 2000. The P-RAM results for these two runs were analyzed to estimate the change in unserved energy attributable the Mostovskoy plant.

Table 7 and Table 8 provide the results of the P-RAM analysis for the base case and the low demand case. Column 2 of these tables presents the estimated annual electricity generation by the Mostovskoy plant over the period 1998 through 2035. Column 3 presents the change in unserved

energy attributable to the Mostovskoy plant as estimated by P-RAM. In the base case, the change in unserved energy was estimated to steadily increase so that by 2005 the entire output of the Mostovskoy plant will contribute to reductions in unserved energy. In the low demand case, that will occur in 2010.

TABLE 1
REFERENCE CASE
CAPACITY ADDITIONS (MW)

	1997	1998	1999	2000	2001	2002	2003 -2005	TOTAL
KRASNODAR								
SIMPLE CYCLE	0	0	0	0	0	0	0	0
COMBINED CYCLE	0	0	0	0	0	0	0	0
SIMPLE TO COMBINED CYCLE*	150	150	100	0	0	0	0	400
TOTAL	150	150	100	0	0	0	0	400
MOSTOVSKOY								
SIMPLE CYCLE	0	0	0	0	0	0	0	0
COMBINED CYCLE	0	0	0	450	0	60	1570	2080
SIMPLE TO COMBINED CYCLE	0	300	450	150	0	0	0	900
TOTAL	0	300	450	600	0	0	1600	2980
NOVOROSSIYSK								
SIMPLE CYCLE	0	0	0	150	260	190	0	600
COMBINED CYCLE	0	0	0	0	0	0	0	0
SIMPLE TO COMBINED CYCLE	0	0	0	0	0	0	0	0
TOTAL	0	0	0	150	260	190	0	600
OTHER LOCATIONS								
SIMPLE CYCLE	0	0	0	150	260	190	0	600
COMBINED CYCLE	0	0	0	450	0	0	1600	2080
SIMPLE TO COMBINED CYCLE	0	450	600	150	0	0	0	1350
TOTAL	150	450	600	750	260	190	1600	4030

*** Krasnodar capacity additions are committed units.**

180

TABLE 2
CHANGE CASE 1 - LOW DEMAND CASE
CAPACITY ADDITIONS (MW)

	1997	1998	1999	2000	2001	2002	2003 -2005	TOTAL
KRASNODAR								
SIMPLE CYCLE	0	0	0	0	0	0	0	0
COMBINED CYCLE	0	0	0	0	0	0	0	0
SIMPLE TO COMBINED CYCLE*	150	150	150	0	0	0	0	450
TOTAL	150	150	150	0	0	0	0	450
MOSTOVSKOY								
SIMPLE CYCLE	0	0	0	0	0	0	0	0
COMBINED CYCLE	0	0	0	270	180	0	570	1,020
SIMPLE TO COMBINED CYCLE	0	300	0	0	0	0	600	900
TOTAL	0	300	0	270	180	0	1,170	1,920
NOVOROSSIYSK								
SIMPLE CYCLE	0	0	0	0	140	130	330	600
COMBINED CYCLE	0	0	0	0	0	0	0	0
SIMPLE TO COMBINED CYCLE	0	0	0	0	0	0	0	0
TOTAL	0	0	0	0	140	130	330	600
ALL LOCATIONS								
SIMPLE CYCLE	0	0	0	0	140	130	330	600
COMBINED CYCLE	0	0	0	270	180	0	570	1,020
SIMPLE TO COMBINED CYCLE	150	450	150	0	0	0	600	1,350
TOTAL	150	450	150	270	320	130	1,500	2,970

*** Krasnodar capacity additions are committed units.**

TABLE 3
CHANGE CASE 2 - 500 MW TRANSMISSION LINE
CAPACITY ADDITIONS (MW)

	1997	1998	1999	2000	2001	2002	2003 -2005	TOTAL
KRASNODAR								
SIMPLE CYCLE	0	0	0	0	0	0	0	0
COMBINED CYCLE	0	0	0	0	0	0	0	0
SIMPLE TO COMBINED CYCLE*	150	150	150	0	0	0	0	450
TOTAL	150	150	150	0	0	0	0	450
MOSTOVSKOY								
SIMPLE CYCLE	0	0	0	0	0	0	0	0
COMBINED CYCLE	0	0	0	250	200	0	1180	1,630
SIMPLE TO COMBINED CYCLE	0	300	360	100	0	0	140	900
TOTAL	0	300	360	350	200	0	1,320	2,530
NOVOROSSIYSK								
SIMPLE CYCLE	0	0	0	40	60	250	250	600
COMBINED CYCLE	0	0	0	0	0	0	0	0
SIMPLE TO COMBINED CYCLE	0	0	0	0	0	0	0	0
TOTAL	0	0	0	40	60	250	250	600
ALL LOCATIONS								
SIMPLE CYCLE	0	0	0	40	60	250	250	600
COMBINED CYCLE	0	0	0	250	200	0	1,180	1,630
SIMPLE TO COMBINED CYCLE	150	450	510	100	0	0	140	1,350
TOTAL	150	450	510	390	260	250	1,570	3,580

*** Krasnodar capacity additions are committed units.**

182

TABLE 4
CHANGE CASE 3 - 1000 MW TRANSMISSION LINE
CAPACITY ADDITIONS (MW)

	1997	1998	1999	2000	2001	2002	2003 -2005	TOTAL
KRASNODAR								
SIMPLE CYCLE	0	0	0	0	0	0	0	0
COMBINED CYCLE	0	0	0	0	0	0	0	0
SIMPLE TO COMBINED CYCLE*	150	150	150	0	0	0	0	450
TOTAL	150	150	150	0	0	0	0	450
MOSTOVSKOY								
SIMPLE CYCLE	0	0	0	0	0	0	0	0
COMBINED CYCLE	0	0	0	300	150	0	860	1,310
SIMPLE TO COMBINED CYCLE	0	300	0	0	0	0	500	800
TOTAL	0	300	0	300	150	0	1,360	2,110
NOVOROSSIYSK								
SIMPLE CYCLE	0	0	0	0	110	250	240	600
COMBINED CYCLE	0	0	0	0	0	0	0	0
SIMPLE TO COMBINED CYCLE	0	0	0	0	0	0	0	0
TOTAL	0	0	0	0	110	250	240	600
ALL LOCATIONS								
SIMPLE CYCLE	0	0	0	0	110	250	240	600
COMBINED CYCLE	0	0	0	300	150	0	860	1,310
SIMPLE TO COMBINED CYCLE	150	450	150	0	0	0	500	1,250
TOTAL	150	450	150	300	260	250	1,600	3,160

*** Krasnodar capacity additions are committed units.**

TABLE 5
CHANGE CASE 4 - 1400 MW TRANSMISSION LINE
CAPACITY ADDITIONS (MW)

	1997	1998	1999	2000	2001	2002	2003 -2005	TOTAL
KRASNODAR								
SIMPLE CYCLE	0	0	0	0	0	0	0	0
COMBINED CYCLE	0	0	0	0	0	0	0	0
SIMPLE TO COMBINED CYCLE*	150	150	150	0	0	0	0	450
TOTAL	150	150	150	0	0	0	0	450
MOSTOVSKOY								
SIMPLE CYCLE	0	0	0	0	0	0	0	0
COMBINED CYCLE	0	0	0	90	210	0	1160	1,460
SIMPLE TO COMBINED CYCLE	0	240	160	0	0	0	350	750
TOTAL	0	240	160	90	210	0	1,510	2,210
NOVOROSSIYSK								
SIMPLE CYCLE	0	0	0	300	50	250	0	600
COMBINED CYCLE	0	0	0	0	0	0	0	0
SIMPLE TO COMBINED CYCLE	0	0	0	0	0	0	0	0
TOTAL	0	0	0	300	50	250	0	600
ALL LOCATIONS								
SIMPLE CYCLE	0	0	0	300	50	250	0	600
COMBINED CYCLE	0	0	0	90	210	0	1,160	1,460
SIMPLE TO COMBINED CYCLE	150	390	310	0	0	0	350	1,200
TOTAL	150	390	310	390	260	250	1,510	3,260

*** Krasnodar capacity additions are committed units.**

TABLE 6
CHANGE CASE 5 - COMPLETION OF ROSTOV NUCLEAR UNIT
CAPACITY ADDITIONS (MW)

	1997	1998	1999	2000	2001	2002	2003 -2005	TOTAL
KRASNODAR								
SIMPLE CYCLE	0	0	0	0	0	0	0	0
COMBINED CYCLE	0	0	0	0	0	0	0	0
SIMPLE TO COMBINED CYCLE*	150	150	150	0	0	0	0	450
TOTAL	150	150	150	0	0	0	0	450
MOSTOVSKOY								
SIMPLE CYCLE	0	0	0	0	0	0	0	0
COMBINED CYCLE	0	0	0	0	70	0	1070	1,140
SIMPLE TO COMBINED CYCLE	0	300	450	0	0	120	30	900
TOTAL	0	300	450	0	70	120	1,100	2,040
NOVOROSSIYSK								0
SIMPLE CYCLE	0	0	0	0	0	110	490	600
COMBINED CYCLE	0	0	0	0	0	0	0	0
SIMPLE TO COMBINED CYCLE	0	0	0	0	0	0	0	0
TOTAL	0	0	0	0	0	110	490	600
ALL LOCATIONS								
SIMPLE CYCLE	0	0	0	0	0	110	490	600
COMBINED CYCLE	0	0	0	0	70	0	1,070	1,140
SIMPLE TO COMBINED CYCLE	150	450	600	0	0	120	30	1,350
TOTAL	150	450	600	0	70	230	1,590	3,090

*** Krasnodar capacity additions are committed units.**

TABLE 7
BASE CASE - REGIONAL
GENERATION IMPACT OF THE MOSTOVSKOY PLANT

YEAR	ENERGY GENERATED (MWH)	CHANGE IN UNSERVED ENERGY (MWH)
1998	305,000	305,000
1999	3,267,000	1,353,000
2000	6,537,000	2,633,000
2001	7,002,000	3,364,000
2002	7,002,000	3,829,000
2003	7,002,000	4,755,000
2004	7,002,000	5,934,000
2005	7,002,000	6,630,000
2010	7,002,000	7,002,000
2015	7,002,000	7,002,000
2020	7,002,000	7,002,000
2025	7,002,000	7,002,000
2030	7,002,000	7,002,000
2035	7,002,000	7,002,000

186

TABLE 8
LOW DEMAND CASE REGIONAL
GENERATION IMPACT OF THE MOSSTOVSKOY PLANT

YEAR	ENERGY GENERATED (MWH)	CHANGE IN UNSERVED ENERGY (MWH)
1998	249,000	240,000
1999	2,994,000	902,000
2000	6,384,000	1,745,000
2001	7,002,000	2,469,000
2002	7,002,000	2,921,000
2003	7,002,000	3,801,000
2004	7,002,000	4,905,000
2005	7,002,000	5,690,000
2010	7,002,000	7,002,000
2015	7,002,000	7,002,000
2020	7,002,000	7,002,000
2025	7,002,000	7,002,000
2030	7,002,000	7,000,928
2035	7,002,000	7,000,928

187