PN-ACB-932
96390

RMA/IND-EMCAT-TR-27B

Energy Management Consultation and Training Project (EMCAT): Demand-Side Management

MUNICIPAL WATER PUMPING

CALCUTTA, INDIA

Trip Report

August 1 - 16, 1997

Prepared by: Charles Fafard and Doug Presny
Resource Management Associates of Madison, Inc.

Prepared for: United States Agency for International Development (USAID)
New Delhi, India
Contract Number: 386-05127-C-00-4100-00

Resource Management Associates of Madison, Inc.
202 State Street, Suite 303, Madison, Wisconsin 53703, USA; telephone: 608-283-2880; facsimile: 608-283-2881

TABLE OF CONTENTS

Introduction 1

Background 2

1. Existing Systems 3

2. Energy Analysis 14

3. Energy Conservation Opportunity Evaluations 18

4. Contacts Made During Evaluation Visit 27

Appendix Tallah Pumping Station Pump and Motor Specifications

INTRODUCTION

This trip report covers the activities of Messrs. Charles Fafard and Doug Presny under the Energy Management Consultation and Training (EMCAT) Project. EMCAT is funded by the US Agency for International Development (USAID) for which Resource Management Associates of Madison, Inc. (RMA) serves as the prime contractor in implementing the project. Under this contract, RMA provides energy efficiency consulting services to India. During this trip, Messrs. Fafard and Presny were in the Indian cities of Calcutta, New Delhi, and Pune, from August 2 through 15, 1997, to conduct preliminary energy audits of the municipal water supply systems for Calcutta and Pune.

This report covers the energy audit work conducted at Calcutta. Portions of the report were taken from documents made available during the trip. The authors acknowledge and appreciate these documents as well as the time and effort given to this project by the staff of the Calcutta Municipal Corporation. The authors would expressly like to thank the following Calcutta Municipal Corporation staff members for their assistance:

Mr. D. Roychowdhury	Chief Municipal Engineer
Mr. Ranjit Mitra	Deputy Chief Municipal Engineer
Mr. P.J. Biswas	Electrical Engineer
Mr. D.K. Sanyal	Manager of Municipal Water Distribution
Mr. R. Choudhuri	Technical Advisor

BACKGROUND

Calcutta is the largest city in India, and the Capitol city for the state of West Bengal. The name Calcutta is an Anglicized version of Kalikata. According to some, Kalikata is derived from the Bengali word Kalikshetra, meaning "Ground of (the goddess) Kali"

Calcutta is known as a densely populated city. It is said that Calcutta is several times more densely populated than the United States cities of Los Angeles or New York. Calcutta has also gained attention because it was the home of Mother Teresa.

Meeting the water needs for the residents, businesses, and industries in Calcutta is a continual challenge. As most do most cities in India, Calcutta gets its water supply primarily from surface water (i.e. rivers). Although sufficient supplies of water exist, the municipality's ability to treat and distribute is limited. Finding sufficient financial budget to not only maintain the immense existing system, but also to expand the system to meet the growing demand for water is a large task for the Calcutta Municipal Corporation (CMC).

The objective of this report is to identify opportunities to reduce the energy costs of providing drinking water. In addition, this report demonstrates techniques that can be used by the CMC to make similar evaluations in parts of the water system that were not included in the scope of this project.

1. EXISTING SYSTEMS

Supplying water to the city of Calcutta is the responsibility of the Calcutta Municipal Corporation (CMC). Water supply to Calcutta began in 1870 with an initial total supply of six million gallons per day. This supply has increased to the current rate of 170 million gallons per day and will soon expand to 240 million gallons per day. The current supply provides an average of 45 liters per person per day.

The process begins by pumping raw water from the Hooghly River, located about 30 kilometers (19 miles) away from Calcutta. The raw water is made potable by treatment at the Palta Water Treatment Plant, which is located at the edge of the Hooghly River. After the water is pumped out of the river, it flows by gravity through the treatment plant where it is filtered and purified. The treated water is then pumped from the treatment plant to the city limits of Calcutta, where the Tallah Pumping Station is located. The Tallah Pumping Station pumps the water throughout the city and stores water in a large elevated tank. After leaving the Tallah Pumping Station, the water is distributed to the end-users in the city. For remote sections of Calcutta, additional booster pumping is done to provide adequate pressure at the end-use points. The two largest booster pumping stations are named Auckland Square and RSM Square.

Water System Energy-using Areas

Pumping Water From the Hooghly River to the Treatment Process
Water is lifted from two existing "intake jetties" (in the Hooghly River) to the treatment process via two intake pump stations employing the equipment listed below. An additional intake jetty and pumping station is planned for the near future (see *Figure 1*).

<u>New Intake Station Pumping Equipment</u>
3 x 630 Hp (54' head, 42 mgd)
1 x 650 Hp (50' head, 42 mgd)

<u>Old Intake Station Pumping Equipment</u>
3 x 650 Hp (52' head, 48 mgd)
1 x 600 Hp (45' head, 42 mgd)

<u>Proposed Intake Station Pumping Equipment</u>
Not yet specified

The process of pumping water from the river to the treatment plant is continuous. The volume of water transported varies depending on the river level. The pumping "head" required by these pumps varies as the level of the river changes. The river is tidal, and goes through two cycles of high and low levels each day. Water is lifted from the river's surface level to the starting height of the water treatment process, approximately 41 feet. After the water is pumped to the beginning of the treatment process, it flows via gravity though the entire process. At the end of the treatment process, the water is collected and pumped via pressure stations from the Palta Water Treatment Plant to the Tallah Pumping Station.

Figure 1 Schematic Layout of Palta Water Works Flow

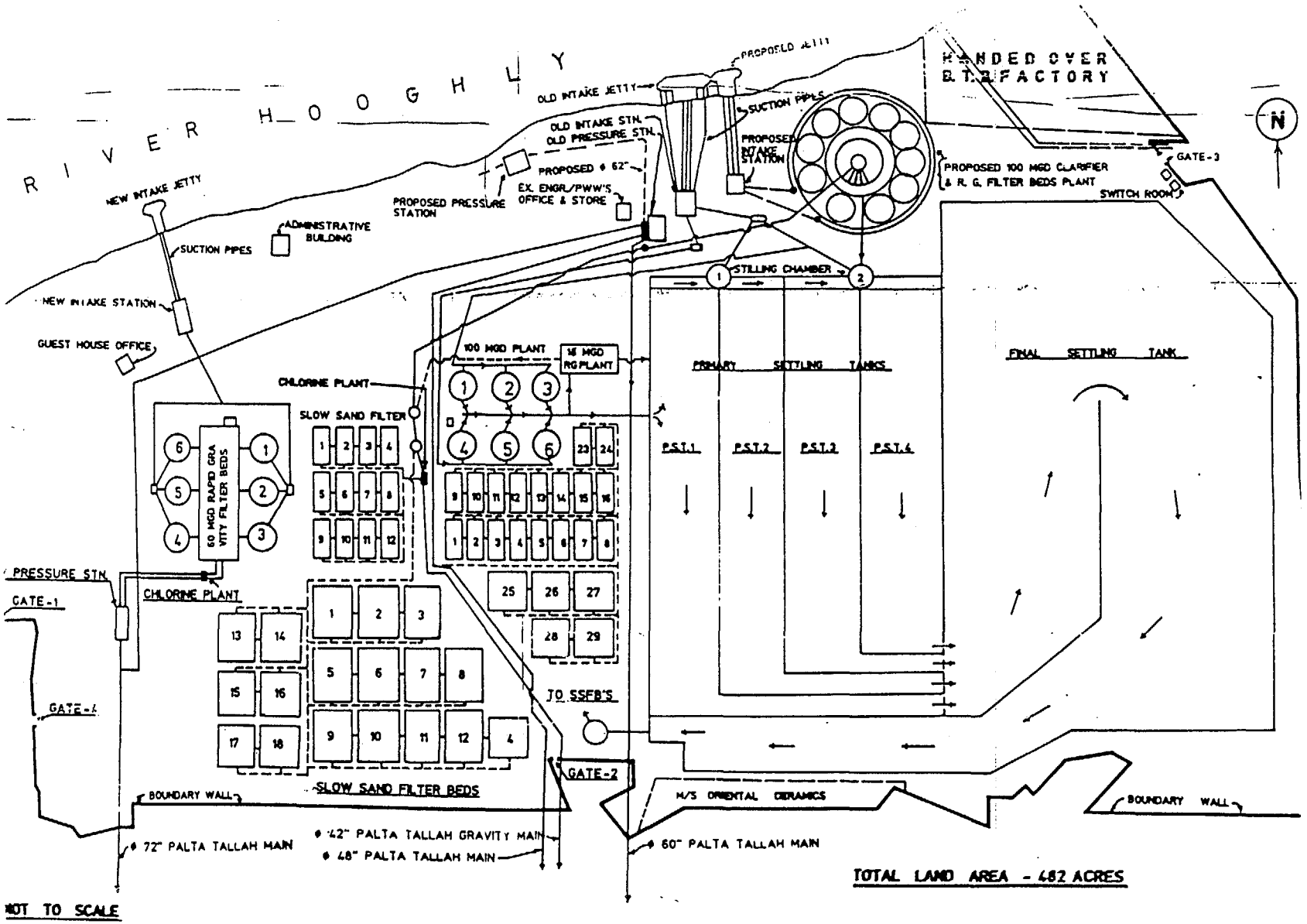

Palta Treatment Plant Pressure Stations
Two pressure stations move the water from the Palta Treatment Plant to the Tallah Pumping Station (see *Figure 2*). A third pressure station is planned for installation. Palta TP is located 72,000 feet (13.6 miles from the Tallah PS. The pressure stations house the following pumping equipment to move water from Palta TP to Tallah PS.

Old Pressure Station
3 x 1500 Hp (120' head, 42 mgd)
1 x 1630 Hp (120' head, 48 mgd)

New Pressure Station
2 x 1150 Hp (120' head, 36 mgd)
1 x 1300 Hp (120' head, 36 mgd)

The pressure stations operate 24 hours per day. They supply three pressurized transmission mains running from Palta TP to Tallah PS. A fourth transmission main relies on gravity. The water from this fourth pipeline is lifted via vertical turbine pumps at the receiving end. The four transmission mains, and their operating characteristics are listed below.

Diameter	Material	Year	Destination
72"	Mild Steel	1961	Tallah Pump Stations #3 & #4
60"	Riveted Steel	1936	Tallah Pump Station #2
48"	Cast Iron	1890	Tallah Pump Station #3 & #4
42"	Cast Iron	1870	Tallah Pump Station #1
62"	.....	future	

Tallah Pumping Station
When the treated water arrives at the Tallah Pumping Station, it is received in one of four underground storage tanks depending on which transmission pipeline is supplying the water (see *Figure 3*). One underground storage tank is located adjacent to each of the four pump houses. The pump houses are submerged into the ground. This is done so that the pumps operate below the lowest working water level of the tank. The water travels from the underground storage tank into the pumps where it is pressurized for distribution within the city.

Since water is not supplied to the consumers 24 hours per day (see *Hours of Water Distribution*), the Tallah Pumping Station receives the incoming water in underground storage tanks and stores pressurized water in an on-site, nine-million-gallon elevated storage tank.

The bottom of the elevated storage tank is 96 feet above the Tallah Pump Stations. The tank contains an additional 16' of head when full. The elevated storage tank assists the pump houses in supplying water for distribution to the city during peak periods.

Tallah's four pump houses create the pressure for final distribution of water. The exception to this is the water that is supplied to two booster pump stations. These booster stations transmit that water to the outlying areas of Calcutta.

Hours of Water Distribution

Because of limited water treatment system capacities, water is supplied to the entire city only 11.5 out of 24 hours per day. The exception is within the relatively small "Independent Zone," which receives water 24 hours per day as a result of a historical negotiation that traded the land needed to expand the Tallah Pumping Station for a continuous water supply. To provide a continuous supply of water to all of Calcutta, CMC operational staff estimates that it would require a capacity of 300 MGD of water. Current water treatment capacity is 180 MGD, and it will be upgraded to 240 MGD per day during the next three years.

Final distribution pressure, measured at the outlet of the pump house, varies according to differences in demand for water. During high demand periods, greater pressure is needed to supply a sufficient capacity of water to the distribution grid. The following table describes distribution pressure at various times of the day.

Time of Day	Duration (hrs)	Type of Pressure	Pressure (kg/cm^2)
05:00 to 06:00	1.0	light/medium pressure	1.0
06:00 to 09:30	3.5	high pressure	2.5
09:30 to 11:00	1.5	no water	0.0
11:00 to 12:00	1.0	medium pressure	1.5
12:00 to 15:00	3.0	no water	0.0
15:00 to 18:30	3.5	high pressure	2.5
18:30 to 19:30	1.0	no water	0.0
19:30 to 22:00	2.5	medium pressure	1.5
22:00 to 05:00	7.0	no water	0.0
	24.0		

From the Tallah Pumping Station, the water flows to distribution zones within Calcutta. There are five distribution zones, labeled as follows (see *Figure 3*):

Zone 1
Zone 2
Zone 3
Zone 4
Independent Zone.

The distribution zones denoted as Zone 3 and Zone 4 each require a booster pumping station to transport the water to areas at a distance from the Tallah Pumping Station. Zone 3 water is boosted in the RSM Square Pumping Station. Zone 4 is boosted in the Auckland Square Pumping Station.

Figure 2: Schematic Flow Diagram - Palta Water Works

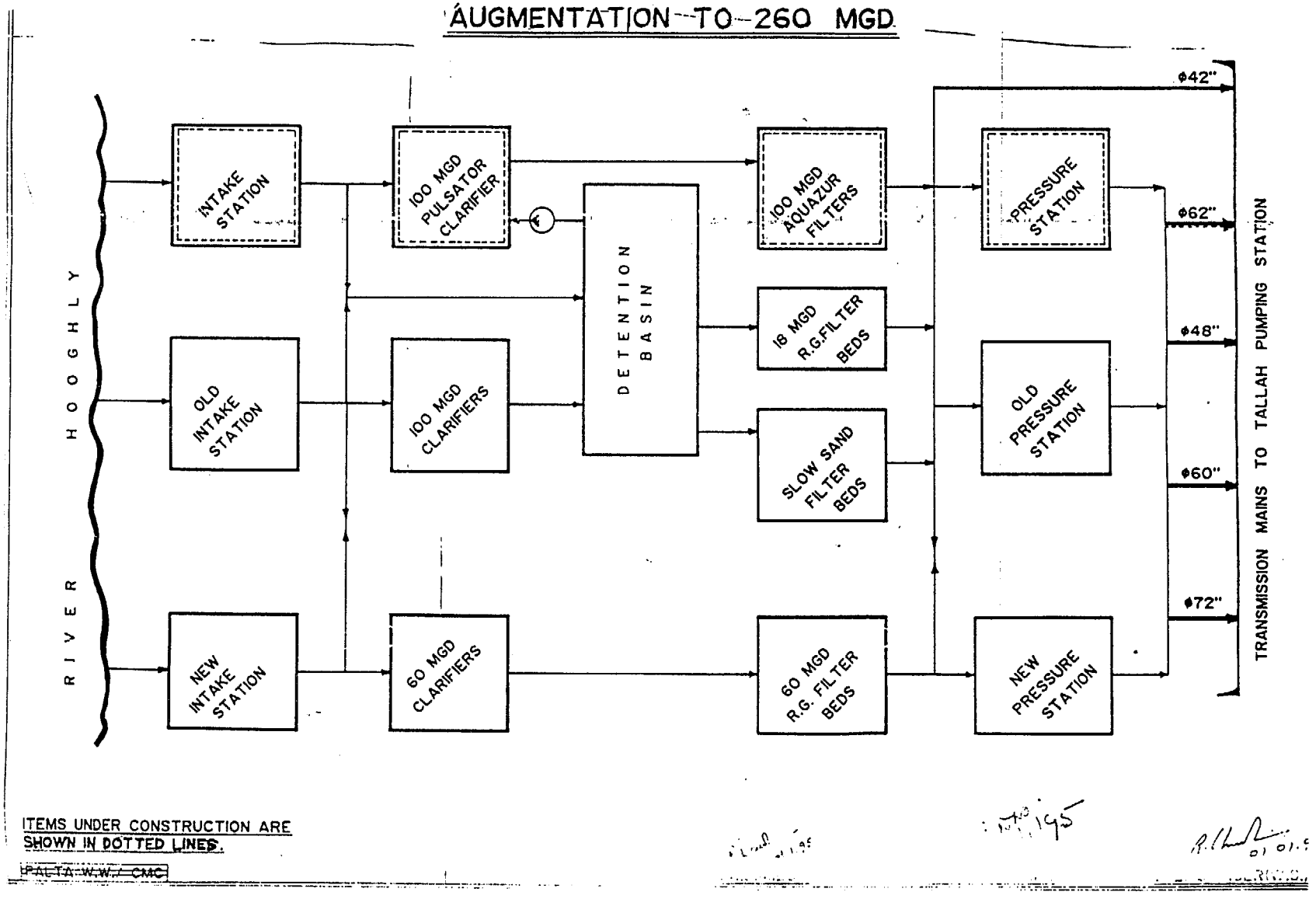

Figure 3: Water System Distribution Zones

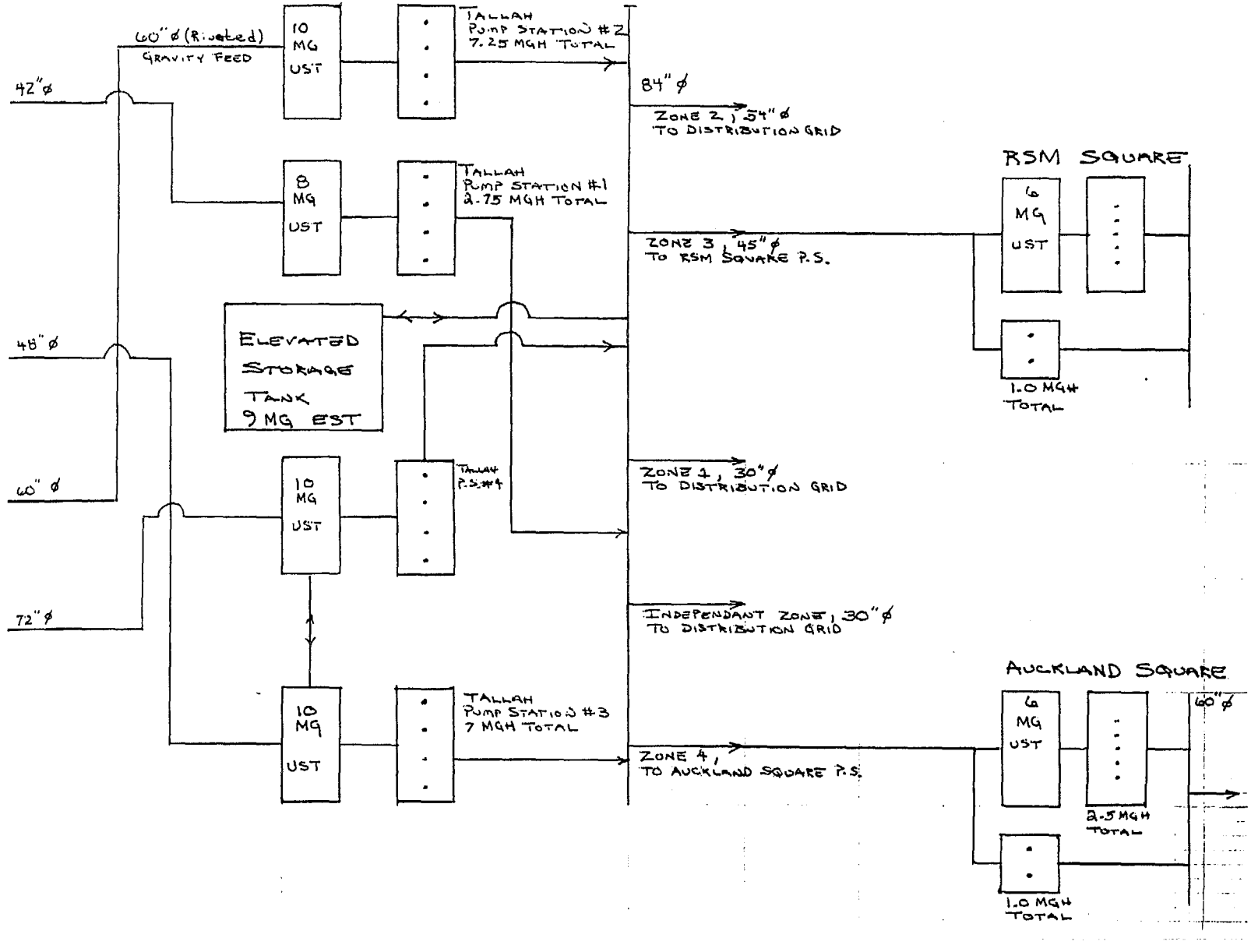

Booster Pumping Stations
The RSM and Auckland booster pumping stations receive water from the Tallah Pumping Station. At each site a six-million-gallon underground storage tank receives 500,000 gallons per hour, 24 hours per day. The RSM Facility has two pump houses.

The base load RSM pumphouse operates 11.5 hours per day according to the pumping schedule described above in *Hours of Water Distribution*. The peaking RSM pumphouse only operates during high-pressure periods, which are from 6:30 AM to 9:30 AM and 3:00 PM to 6:30 PM each day. During these high-pressure periods, the 500,000 gallons per hour received from Tallah are pumped via the in-line pumps in the peaking pump house. An additional 500,000 gallons per hour are pumped by the baseload pumphouse, drawing water only from the underground storage tank. This allows a discharge flow of 1,000,000 gallons per hour, despite receiving only 500,000 gallons per hour from the Tallah Pumping Station. The water leaving the booster pumping stations is distributed though a piping network to serve the water consumers in Calcutta.

Other Water Supplies
In addition to the treated water which originates at the Palta Water Works, the city of Calcutta also supplies water to a small percentage of its residents via deep tube wells. There are 350 of these wells. Untreated, or raw water is also supplied to areas of Calcutta for end-uses such as firefighting, flushing privies, and open-channel sewage transport. This water is taken from the Ganges River, which is located close to Calcutta. These water supplies were not included in the focus of this report.

Water Consumers in Calcutta
After water is pumped into the city's water distribution piping network, it is utilized by the following groups of end-users:

Industrial Plants
Commercial Businesses
Institutional and Government Facilities
Apartment Complexes
Single-family Homes
Slum Area Standposts
Distribution Leaks.

Without distribution metering, the CMC cannot know what share of the water supply is being distributed to each of the end-user groups.

Distribution Leakage
Visual identification of underground distribution piping leakage is not possible because of the parallel runs of water and sewer piping. When underground water supply pipes develop leaks, the escaping water travels across and into the adjacent sewage pipe. Sewage piping is not as leak-resistant as pressurized water piping. The experienced system operators estimate that 20% to 30% of the water that leaves the treatment plant leaks out in the distribution process. This makes leakage one of the largest consumers of treated water.

Water Tariffs and Metering

Currently, the tariff structures for supply of water are based on the size of the piping ferrule which enters the building. *Figure 4* is a copy of the current water tariff sheet.

The CMC has previously attempted to meter and sell water based on actual consumption. The conclusion by the CMC was that protection against end-user meter tampering was not practical with standard water meters. The perception is that revenue is lost when customers are metered because customers tamper with the meters to reduce their billing.

Energy Costs

Figure 5 is a copy of the electricity tariffs which have been applied to municipal water production from May of 1993 to the present. The tariffs are based on four separate charges:

Fee per kWh of electricity used (currently Rs. 1.48 per kWh)
Tax per kWh of electricity used (currently Rs. 0.40 per kWh)
Fee per measured maximum monthly electrical demand (currently Rs. 100 per kW)
Fee for power factor correction if less than 95% (currently Rs. 1.5 per meas. kW demand)

The present average cost per kWh is presented below with various load factors per kilowatt hour and no power factor fee.

Load Factor (%)	Rs/$ per kWh
50	2.154/0.0615
60	2.108/0.0602
70	2.076/0.0593
80	2.051/0.0586
90	2.032/0.0581
100	2.017/0.0576

Figure 4: CMC Current Water Tariff Sheet

Rate of Fees & Charges for the following items havebeen enhanced/ includex w.e.f. 01.4.96. Rates not included hereunder with remain unaltered.

Item No.	Description of Item	Rate of fees & charges for 1996-97.
1.	Charge for supply of wholesome/filtered water 3600 litres(800 gallons) by Lorry & tanker within a distance of 8 km. from the Centre of the City, (Payment to be made at least 72 hrs. in advance at the Cash Counter of the deptt and the supply depends on availibity of Lorry.	Rs. 275.00 Per Trip
2.	Rates for using filtered water for ICI or non-domestic purpose from domestic connection, Corporation Tubewell with prior permission from EEWS,	
a)	i) Daily Consumption from 0 to 50 ltrs	Rs. 25.00 Per Qtr
	ii) Daily Consumption from 51 to 100 Ltrs	Rs. 37.50 Per Qtr.
N.B.:	No charges at the rate as per item no. 8(a) of schedule of Rates & Charges of Water Supply for 1996-97 be realised.	
	METER	
16A.	Security Deposit for non-domestic or ICI Connection with Meter of ferrule connection.	Rs.6000.00 for each Meter & Ferrule connection above 10 mm
16B.	- DO -	Rs.4000.00 for 10 mm only.
17	Supply of filtered water for non-domestic purpose in Town through Meter.	Rs.7.00 per 1000 ltrs + Meter Rent.
20.	Charge/Rate for using filtered water through independent ferrule connection for business/building/Non-domestic purposes in Calcutta.	

Ferrule Size.	Buildings/Business/Non-Dom.
3.18 mm (1/8")	Rs. 120.00 Per Month
4.76 mm (3/16")	Rs. 180.00 "
6.35 mm (1/4")	Rs. 240.00 "
10.00 mm(3/8")	Rs. 400.00 "
11.10 mm(7/16")	Rs. 450.00 "
12.10 mm(1/2")	Rs. 550.00 "
15.00 mm(above 1/2")	Rs. 800.00 "
19.05 mm(3/4")	Rs. 1400.00 "
25.40 mm(1")	Rs. 2200.00 "

58.	Inspection fees for inside water supply system :-	
(c)	For above II storied upto III storied	Rs. 200.00
(d)	For above III storied upt IV storied	Rs. 800.00
(e)	For above IV storied upto V storied	Rs. 1600.00
(f)	For above V storied upto VI storied	Rs. 2500.00
(g)	For VII storied	Rs. 4000.00

Figure 5: Current Municipal Water Production Electricity Tariffs

SM_10

Statement of different Charges of M/S C E S C

Month/Year	Unit Charges Per Unit	Max Demand Charges Per K.W.	Fuel Surcharges Per Unit	Power Factor Surcharges Per K.W. on M.D.
May '93	0.30	50.00	0.18	1.00
Sept '93	**1.16**	**65.00**	0.18	1.00
Jan '95	**1.25**	**80.00**	0.18	**1.50**
Nov '96	**1.48**	**100.00**	0.18	1.50
Dec '96	1.48	100.00	**0.26**	1.50
May '97	1.48	100.00	**0.40**	1.50

Hon'ble Mayor

Above statement is variation on Tariff rates of energy supplied at water works may kindly be seen.

Energy Cost of C E S C comprises of four components
i) Peak Demand Charge.
ii) Energy Consumption Charge.
iii) Fuel Surcharges.
iv) Power factor Surcharge if P.F. is below 0.95.

C.M.E.(W.S.)
4.8.97

PAGE INTENTIONALLY LEFT BLANK

2. ENERGY ANALYSIS

After reviewing the water extraction, treatment, transmission, and distribution systems, a number of efficiency opportunities were identified with the valuable assistance of the water system operation personnel. The objective of these recommendations is to document the prospective energy cost-saving opportunities, and convey the techniques necessary to repeat similar energy efficiency evaluations throughout the system.

Below are descriptions of energy efficiency opportunities which were identified during the system evaluation. The descriptions include conclusions reached by this report's evaluation. The detailed analysis of each energy efficiency opportunity is found in Section 3.

Add Pumping Mechanism to 8,000 Standposts

In low-income areas of the city, water is supplied free of charge via public access points known as "standposts". During the 11.5 hours each day when water is supplied to the city, the standposts are pressurized with water. In almost all cases, the standposts supply water regardless of whether it is being collected by a resident or not. This is because valves are not shut off after use. Automatic closing valves have been tested by the CMC, but they are always rigged to remain open by the end-users.

A recent experiment conducted by the CMC installed a customized hand pump mechanism on a group of standposts. The mechanism operates on a principal that requires the end-user to gently pump a handle in order for water to be supplied. The mechanism proved to be effective for water conservation and acceptable to the end-users.

Assuming an average 40% reduction in water consumption per standpost, implementation of the pump mechanisms will have a three-year financial payback. In addition, 7.4 million gallons per day of capacity will become available for future system expansion.

Implement Leak Identification Team

All municipal water systems have piping leaks. The challenge is to find a cost-effective way to minimize the number of leaks. Calcutta has an additional challenge in that leaks rarely show on the ground surface. This is because of the close proximity of sewerage pipes, which allows the flow of leaking water to drain away without leaving a visible sign.

CMC water system operations staff estimate that 20% to 30% of leakage occurs in the water distribution process. Assuming a 25% loss, Rs. 22,995,000 ($328,500) per year would be saved each year if the system loss was reduced from 25% to 20%. Because such great savings can be achieved with only a 5% reduction in loss, this report concludes that an investment in a leak detection team is financially wise. The cost of implementing such a team is estimated at Rs. 1,820,000 ($52,000) per year. This amount would be retrieved with just two months of leak loss savings. The remaining savings would be "profit" for the CMC.

Although it is not financially realistic to have no system leaks, this should be the goal. The rule of thumb for a well-maintained system is to tolerate a 5% distribution system leak rate. This degree of tolerance is realistic in light of the inevitability of some small leaks that cannot be detected. This recommendation is to dedicate a work team to finding system leaks. This also includes digging up existing piping systems to perform evaluations of its condition, and project future replacement.

Ultrasonic listening devices are commonly available to detect the sound of leaks in water pipes. With this tool, water leaks can be located by means other than low water distribution pressure. The leak detection team should use an instrument of this type in their investigations.

Install Remotely Read Underground Water Meters at Large Water Consumers

Large customers pay a fixed amount each month for their water supply. Water system operations staff verify the common problem with fixed-rate billing is that it does not encourage efficient use of water.

In the past, the CMC has installed water meters on large end-users. The water system operators' impressions are that meters are frequently tampered with. This results in a significant underbilling for usage. Water system operations staff have been considering remotely read metering, which would not allow the end-user to access and later the meter. In addition, frequent automated meter reading would detect abrupt changes in usage that may reflect meter tampering.

The conclusion of the audit team is that while the remote meter reading may solve the problem of meter tampering, the cost to implement and use this type of meter system could not be justified, even with a 25% savings in water consumption at each site.

The method which has been successful in the United States is to provide meters which are sealed. Any tampering with the meter is noticed by the person reading the meter. Since there are large financial penalties for meter tampering, the temptation to try to save on the monthly billing is small. In addition, water service would be discontinued for repeat instances of meter tampering. Most facilities cannot operate without water, so they do not risk tampering with meters.

Increase Pumping Volumes During High-tide Periods at Palta

The treated water supplied to Calcutta originates at the Hooghly River. Twice each day, the Hooghly rises and falls in two high- and low-tide periods. Since the water must be lifted from the river to the start of the treatment process, it takes more energy during low-tide periods as compared with high-tide periods.

To reduce energy consumption, it is possible to employ more pumps during high-tide periods, and fewer pumps during low-tide periods. This would result in the same volume of pumped water, but a reduced "static head" would require less work to pump a given volume of water.

After financial evaluation of this concept, it is determined that the amount of savings may not offset the additional pumping coordination required. Assuming a 10-foot average elevation

increase for two periods of two hours each (total four hours) of high-tide pumping, Rs. 440,000 ($12,550) would be saved each year. Characteristics of the tide change may vary from those assumed. This variance may increase or decrease savings. Actual savings can be easily determined using the method presented in the appendix to this report. Although the cost saving is modest, capital investment is not required. Implementation of this concept may be deemed worthwhile by system operation personnel.

Install Variable-speed Drives on Pumps to Compensate for Increased Electrical Frequency

When the electrical grid's frequency exceeds 50 hertz, it is now necessary to throttle pump output in order to protect the pump motor from overloading. This is an effective mechanical solution to the problem, although it increases the amount of electricity required to pump each unit of water.

One method to compensate for this is to adjust the speed of the motor back to 50 hertz by using a variable-speed drive (VSD). This allows the motor to operate without overloading.

Assuming that a 1,000 kW motor would be overloaded for two hours per day, the additional energy consumed by throttling the pump with a valve is estimated at Rs. 25,660 ($733) per year. This assumes that the valve is providing an addition 10 feet of required pump head. Since the cost of a VSD for a 1000 kW motor is approximately Rs. 3,500,000 ($100,000), this is not a reasonable measure to pursue.

An alternative to a VSD is the option to trim the impellar on a back-up pump, downsizing its output. This can be done to meet the motor maximum load when electrical freqency is excessive. It will reduce energy consumption in addition to minimizing valve wear. Local prices for impellar trimming should provide a payback of less than one year.

Install Direct-drive Diesel Engine for Pump Houses with Minimal Run Time

One of the pump houses visited only required two hours of pumping under present conditions. In this case, the entire monthly electrical demand charge is assessed by the electricity supplier, although the operation time of the equiopment is minimal.

An alternative to operating in this manner is to provide a diesel engine as a prime mover for the pump. For this report analysis, a 1,000-kW, fully loaded motor was evaluated assuming two hours of operation each day. The analysis provided in the appendix to this report shows that if a pump house only operates two hours per day, a diesel engine would pay for itself in 4.4 years.

An alternative to replacing an existing motor, is to install the existing motor in a location requiring a new motor of similar type. In this case, only the incremental cost of the diesel engine setup would be incurred. This would bring the payback back to well within two years.

Create an Energy Manager Position

Given the large amount of energy used by the CMC to pump water, it is recommended to have a person dedicated to the identification and implementation of energy efficiency measures having good financial returns. The brief energy review given in this report, demonstrates the potential of energy saving opportunities which are available to the municipal water system. A full-time energy manager will gain insight into many additional opportunities that could reduce energy consumption with little or no investment. Many of the items identified in this report not only save energy, but also reduce the demand on the system for water. This then reduces the amount of investment necessary to meet an otherwise increasing demand.

Many other energy efficiency opportunities exist (such as those listed below) that require efforts from a full-time energy manager for complete evaluation.

> Should the riveted mild steel pipe be encapsulated from the outside, repaired, lined, or replaced based on the leakage from this pipe?
>
> Should the incoming transmission pipes to Tallah be headered so that the best pump equipment at Palta can be baseloaded?
>
> It is reported that leak rates in the water treatment process could be improved. What is the investment required, and how much would the energy cost savings be?
>
> Should each pump impellar at Tallah, RSM, and Auckland Square be trimmed to optimize it for a specific pressure period?

The next section of this report includes detailed evaluations of six energy conservation opportunities that were discussed earlier in this report. The objective of presenting the relevant calculations is to demonstrate the technique used to quantify energy conservation opportunities. These calculations are based on a specific application to the CMC water supply system. The examples may be used to evaluate numerous other similar opportunities in the CMC system.

3. ENERGY CONSERVATION OPPORTUNITY EVALUATIONS

Standpost Hand Pump Implementation

Description:
Retrofit existing standposts in public water supply areas to minimize water waste.

Savings:
System operators project that 40% of the water which exits the standpost is wasted because of open valves.

Calculation:

Typical flow from a standpost	= 200 imperial gallons per minute
Daily hours of supply	= 11.5
Estimated percent of water saved	= 40%
Number of standposts in Calcutta	= 8,000
Value of water per million gallons	= Rs. 3,500 ($100)

Annual Water Waste in Imperial Gallons:
= 200 gal/hr x 11.5 hr/day x 40% x 365 days/yr
= 335,800 gallons/yr

Value of Wasted Water per Standpost:
= 335,800 gallons/yr x Rs. 3500 per 1,000,000 gallons
= Rs. 1,175 per year
= $34 per year

Cost to Implement Standpost Pump System at 8,000 units:
= Rs. 3,500 ($100) per unit.

Simple Payback Period:
= Rs. 3,500 / Rs. 1175 per year
= 3.0 years

Investment and Annual Cost Savings for 8,000 units:

Investment	= Rs. 3500 x 8000 units = Rs. 28,000,000 ($800,000)
Annual Savings	= Rs. 1175 per year per unit x 8000 units = Rs. 9,400,000 ($268,570)

Other Benefits:
This measure would reduce daily treatment and pumping capacity by:
= 200 gallons/hr x 11.5 hr/day x 40% x 8,000 standposts
= 7.36 million gallons per day

Implement Proactive Leak Identification Program

Description:
Create a crew that has the responsibility of searching for and repairing water piping leaks, both underground and visible leaks.

Savings:
System leakage rates are estimated to be roughly 20% to 30% of the total water treated. This is based on system operator experience.

Water Loss Quantity Calculation:

Daily hours of water treatment =	24
Estimated leak loss percentage =	25%
Number of hours in one year =	8,760
Average treatment plant flow =	180 MGD

Calcutta Leak Loss Estimation
System daily water treatment = 180,000,000 imperial gallons per day
Cost to produce 1,000,000 gallons:
= Rs. 3500
= $ 100

Loss %	Lost Gallons / Day	Rs. Cost / Day	$ Cost / Day	Rs. Cost / Year	$ Cost / Year
5	9,000,000	31,500	900	11,497,500	328,500
10	18,000,000	63,000	1,800	22,995,000	657,000
15	27,000,000	94,500	2,700	34,492,500	985,500
20	36,000,000	126,000	3,600	45,990,000	1,314,000
25	45,000,000	157,500	4,500	57,487,500	1,642,500
30	54,000,000	189,000	5,400	68,985,000	1,971,000
35	63,000,000	220,500	6,300	80,482,500	2,299,500
40	72,000,000	252,000	7,200	91,980,000	2,628,000
45	81,000,000	283,500	8,100	103,477,500	2,956,500
50	90,000,000	315,000	9,000	114,975,000	3,285,000

Annual Water Waste in Imperial Gallons:

To present the value of a proactive water leak identification and repair program, a reduction from an assumed loss of 25% to 20% is quantified.

25% loss from chart above	= Rs. 57,487,500 ($1,642,500) annual cost
20% loss from chart above	= Rs. 45,990,000 ($1,314,000) annual cost
5% loss reduction	= Rs. 22,995,000 ($ 328,500) annual cost

Cost to Implement:

Crew of three plus one supervisor

Labor Cost per Week	= Rs. 17,500 ($500)
Material Cost per Week	= Rs. 17,500 ($500)
Total Cost per Week	= Rs. 35,000 ($1000)
Total Cost per Year	= Rs. 1,820,000 ($52,000)

Simple Payback Period:

= $52,000 / $328,500
= 2 months

Return on Investment Each Year:

$328,500 / $52,000 = 630%

Other Benefits:

The water treatment and distribution systems will have more capacity
Reduced volume of infiltration during non pumping periods

Remote Metering of Large Water Users

Description:
Install water meters with capability to be remotely read on a daily basis. This will promote conservation in large users as a consequence of the per-unit charge for the product. In addition, the remote reading will allow the utility to track daily consumption, which will indicate meter tampering. The objective is to reduce water consumption while maintaining customer water bills at their present level.

System operation staff feel that large consumers are generous with their water consumption when charged a flat rate based on ferrule size. In addition, when meters have been installed in the past, operations staff are confident that meter tampering is quite common.

Savings:
To quantify the financial return for an investment in remote reading technology, a 25% reduction of water consumption (per customer metered) is assumed.

Savings Calculation:
Typical consumption for a 1-inch (25-mm) ferrule is assumed to be 628,000 gallons per month. This is based on the present monthly fixed service fee of Rs. 2,200 and a production cost of Rs. 3,500 per million gallons of water.

If a 25% reduction in end-user end-user water consumption is achieved, the municipal water system will save Rs. 2,200 x 25% = Rs. 550 ($15.71) per month on the cost to deliver water to the average customer.

Month savings =	Rs. 550 ($15.71)
Annual savings =	Rs. 6,600 ($188)

Cost to Implement:
Monthly cellular phone fee per customer meter
= Rs. 300 ($8.57) per month fixed charge + Rs. 16 ($0.46) per day (assuming 2-minute transfer)
= Rs. 300 + 31*Rs. 16
= Rs. 796 ($22.74)

Conclusion:
The cost to retrieve the meter information is greater than a 25% reduction in the customer's consumption of water. This does not include the initial investment for a remote sending unit connected to the meter. In the United States, tampering with water meters is very rare. Security measures which lead to this include very large fines for evidence of meter tampering and discontinuation of water service if tampering (diversion) is repeated. Meters are fastened closed with a wire of which the two loose ends are bound with a lead seal. The lead has a texture imprinted in it to detect if it has been broken. This lead seal is checked each month when the meter is read.

Increase Pumping During Hooghly River Daily High Tides

Description:
To reduce the amount of energy it takes to lift water from the Hooghly River up to the start of the treatment process, it is recommended to maximize pumping volumes during the two daily high-tide periods and minimize pumping from the river during the low-tide periods.

Because surplus pumping capacity is available, this is possible. Impact on the water treatment process was not perceived to be a problem during discussions with operational staff. Restrictions on the capabilities of the treatment process may be a practical barrier to this recommendation.

Savings:
The energy savings results from a reduced pump head required to lift the water from the Hoogly River to the start of the water treatment process. To quantify the results, one foot of pumping head savings is quantified. This number can be multiplied by the actual variance between high tide and low tide. The pump management is to pump additional water at high tide to replace water which would have been pumped during low tide.

Savings Calculation:

Pump Horsepower = U.S. Gallons per Minute * Feet of Head * Specific Gravity of Water/3,960

If 180,000,000 imperial gallons of water are now treated per day, it is assumed that 1/24th of this quantity, or 7,500,00 gallons are pumped each hour.

It is assumed that at each high-tide peak, water pumping will be maximized for two hours, and during the two low-tides, water pumping will be minimized. This totals four hours of "high-tide" pumping.

The amount of water increase during high tide will be assumed to be 50% greater that the average 7,500,000 gallons per hour, or 11,250,000 gallons per hour. The incremental amount of pumping is 4,250,000 gallons per hour.

The volumes discussed above are measured in imperial gallons. These figures are multiplied by 1.2 to be converting into U.S. gallons.

4,250,000 imperial gallons per hour * 1.2 imperial gallons per U.S. gallon / 60 minutes
= 85,000 U.S. gallons per minute

Hp savings = (1 foot of head) * (85,000 GPM) X (1) / (3960)
Hp savings = 21.5 Hp

kW savings = (21.5 Hp) * (.746 kW/Hp)
kW savings = 16 kW

kWh savings per year = (16 kW) * (4 hr/day) * (365 days/ year)
kWh savings per year = 23,360 kWh per year

Cost per kWh = Rs. 1.88 ($0.0537) including kWh and tax only

Annual cost savings = (23,360 kWh) * (Rs. 1.88 / kWh)

Annual cost savings = Rs. 43,917 ($1,255) per foot of elevation difference between a two-hour period during high tide as compared with a two-hour period during low tide.

Cost to Implement:
To implement this measure would require pump operator schedule modification. Capital investments are not required.

Simple Payback Period:
Since no investment is required, payback for implementation of this measure is immediate. System operations staff will need to evaluate savings as compared with increased pump house operator responsibility.

Conclusion:
If the elevation difference is 10 feet, the annual energy cost savings is estimated to be Rs. 439,170 ($12,550). Although this figure is only 0.5% of the total electrical cost for Palta Water Works, it may be significant because there is no need to expend capital to implement the recommendation.

Eliminate Pump Throttling During Excessive Electrical Frequency Periods

Description:
The speed at which a motor turns depends directly upon the frequency of the electrical alternating current. The frequency is specified at 50 Hertz. For periods each day, the frequency exceeds 50 Hertz.

Pump pressure and flow depend directly on the speed at which its shaft is rotating. When electrical frequency increases, so does the output of the pump.

A negative impact of this frequency increase is that the motor will become overloaded. To prevent this, operators must close the pump's discharge valve to artificially introduce more system head. The result is that the pump will reduce its volume of output, and the load on the motor will be reduced.

By closing the pump's discharge valve, more energy per unit of water pumped is required. This will also change the efficiency at which the pump operates.

This recommendation is to provide either a variable-speed drive, or back-up pumps with trimmed impellers to eliminate the need for discharge throttling during high electrical frequency periods.

Savings:
It is assumed that electrical frequency is 52 Hertz for two hours per day. Savings will be seen from elimination of the system head generated by closing the pump's discharge valve.

Savings Calculation:

(RPM2 / RPM1) = (Q2/Q1)
(RPM2 / RPM1)^2 = (P2/P1)
(RPM2 / RPM1)^3 = (kW2/kW1)

Assume:

- The pump is discharging 12,000 US-GPM.
- A 10-foot head is added by means of the discharge valve to restrict motor power draw.
- Flow is reduced to 10,000 US-GPM.

The amount of horsepower "wasted" in the throttling process is equal to:

Hp = (10 feet) * (10,000 US-GPM) * (1) / 3960
Hp = 25
kW = 25 * 0.746 = 18.7

If pump throttling is required for two hours per day, the following additional energy is used.

kWh = (18.7 kW) * (2 hr per day) * (365 days per year)
kWh = 13651 per year

kWh cost = (13651 kWh) * (Rs. 1.88 per kWh)
kWh cost = Rs. 25,660 ($733) per year

Conclusion:
The amount of electrical cost wasted as a result of pump throttling is not significant in this case because of the small amount of hours each day which require throttling. Given the relatively high cost of variable-speed drives, there would not be a reasonable payback period to justify such a purchase.

Given the 100% redundancy of pumps in a majority of the pump houses, the opportunity exists to downsize the impellers in one-half of the pumps. This would allow the back-up pumps to be used during periods of high frequency. The trimmed impeller pumps would also perform during low-pressure periods.

Install Diesel Engines to Drive Pumps when Hours of Operation are Minimal

Description:
Electric motors are the preferred prime mover for municipal water systems. In the case where hours of operation are minimal, it may be more cost-efficient to outfit back-up pumps with diesel engines as their prime mover. The reason for this is that a significant portion of the electrical bill is a fee for the quantity of electrical demand measured. This measured electrical demand is based on the average kW use during either a 15- or 60-minute period. If the motor only works for a few hours each day, the demand charge with still be the same as if the motor operated continuously.

Savings:
Energy cost is saved because the disproportionate demand charge will not be seen when using a diesel engine.

Savings Calculation:
To quantify the savings of this measure, Pump House #4 at Tallah Pumping Station will be used.

Present hours of operation each day	= 2
Days per year of operation	= 365
Motor electrical demand	= 1,000 kW (full load)
Electrical demand charge	= Rs. 100 per kW per each month ($2.86/kW*month)
kWh charge	= Rs. 1.88 per kWh ($0.0537 / kWh)
Diesel fuel cost	= Rs 10 / liter ($1.08/gallon)
Diesel BTU	= 33,000 / liter (125,000 / gallon)
Diesel efficiency	= 40 %
Btu/kWh	= 3413 BTU

Cost in diesel fuel for 1 kWh of energy:
= 3,413 BTU per kWh / (33,000 BTU per litre) / (40% efficiency)* (Rs. 10 per liter)
= Rs. 0.6826 per kWh

Monthly electrical demand charge for a 1,000 kW load:
= (1,000 kW)* (Rs. 100 per kW*month)
= Rs.100,000 ($2,857)

Annual electrical demand charge for a 1,000 kW load:
= Rs. 1,200,000 ($34,284)

Cost for a diesel engine with 1,000 kW of power = Rs. 5,250,000 ($150,000)

Payback for installation of a diesel engine & accessories to replace a 1000 kW electric motor:
= Rs. 5,250,000 / Rs. 1,200,000 per year
= 4.4 years

4. CONTACTS MADE DURING EVALUATION VISIT

Mr. Municipal Commissioner
Fax: 244-0201
Fax: 244-2578 (mayor's office)

Mr. D. Roychowdhury	Chief Municipal Engineer
Mr. Ranjit Mitra	Deputy Chief Municipal Engineer
Mr. P.J. Biswas	Electrical Engineer
Mr. D.K. Sanyal	Manager of Municipal Water Distribution

Kirloskar Distributor
Weltek Pumps Ltd, Calcutta
Tel: 243-3338 or 243-3515 or 243-2644
Fax: 243-2151

APPENDIX

Tallah Pumping Station Pump and Motor Specifications

TALLAH PUMPING STATION - PUMP AND MOTOR NAMEPLATE INFORMATION

Tallah Pump Station 1
(motor nameplate information)
Helmke, Hannover Mulhouse
3 phase, Type FBA566L10, 850 kW, 10 pole, 592 RPM, 6000 volts, 50 hertz, 113 amps
95% full load efficiency

(no pump nameplate information)

Tallah Pump Station #2
(type 1 - motor nameplate information)
Lawrence Scott & Electromotors Ltd.
1976, # 831ZE01/3, 1120 kW, 590 RPM, 6600 V +/- 10%, 3 ph., 50 hz, 146 amps, Class F

(type 1 - pump nameplate information)
Mather & Platt Pump
#8652, Type 30 MEDI, 25000 gpm, 130' head, 650 rpm

(type 2 - motor nameplate information)
3 phase, 50 Hz, 6000 V, 138.5 amps, 1500 Hp, 590/600 rpm, continuous rating

(type 2 - pump nameplate information)
30,000 gpm, 120' head, 590 rpm, Type 40 MEDI

Tallah Pump Station #3

(type 1 - motor nameplate information)
Mather & Platt Ltd.
#193547, Frame L18, Insulation class B, 1300 Hp, 6000 volts, 117 amps, 600/590 RPM, England

(type 1 - pump nameplate information)
Mather & Platt
Pump 29,170 GPM, 120' head, 590 rpm, type 30/36, England

(type 2 - nameplate on motor)
Laurence, Scott, Electromotors, Norwich & Manchester, # 8312E01/2, 1976, 1120 kW, 590 rpm
6000 volts +- 10%, 146 amps, Class F
(type 2 - nameplate on pump)
Mather & Platt
29,170 GPM, 120' head, 590 rpm, Type 30/36, England

Tallah Pump Station #4

four identical pump and motor sets with the following nameplate information

(pump nameplate)
Mather & Platt
SN 951800/C-1, Type 36/36 DV long, M3/Hr 7875, 36.6 M head at 593 RPM

(motor nameplate)
Lawrence Scott & Electromotors Ltd.
Induction Motor, # B652NO1/2, 1996, kW=1000, 6000 volt, 3 phase, 50 hertz
593 rpm, 131 amp, pf = 0.77, Class B