PN-ACB-707

BURNS AND ROE ENTERPRISES, INC.

FINAL

FEASIBILITY REPORT FOR DELIVERY ORDER No. 16
World Bank Loan to Georgia
Communications, Control and Dispatch Systems and Maintenance of Four Hydroelectric Power Stations

GEORGIA

December 1996

Prepared by:	**American Electric Power (AEP)**
Submitted to:	**U.S. Agency for International Development**
Contract No.:	**CCN-0002-Q-00-3154-00** **Energy Efficiency and Market Reform Project** **Delivery Order No. 16,** **Communications, Control and Dispatch Systems & Maintenance of Four Hydroelectric Power Station**

DO16FINR.COV

Burns and Roe Enterprises, Inc.
1400 K Street N.W., Suite 1050, Washington, DC 20005
(202) 408-6831 Fax (202) 408-6835

December 24, 1996

Mr. Iqbal M. Chaudhry
U.S. Agency for International Development
320 21st Street N.W., Rm 4440 NS
Washington, D.C. 20523

Subject: **Georgia - Delivery Order #16**
World Bank Feasibility Report
Communications, Control and Dispatch Systems and Maintenace of Four Hydroelectric Power Stations

Dear Mr. Chaudhry:

This letter transmits the "Final" report for the rehabilitation of the Communications, Control, and Dispatch Systems and Maintenance of Four Hydroelectrc Power Stations. This report was prepared by AEP Energy Services. Work began in March of 1995. Initially this work was to include the electric transmission & distribution system, but it was determined that much of this work was being performed by the Russians. It was therefore deleted from further consideration. The rehabilitation needed for the Tbilis Control Center, Sakenergo Headquarters, Kutaisi Control Center, Data Aquisition Systems and Fault Recorders comprised the major components for this work. A draft report was reviewed during the April 1996 World Bank mission to Georgia. The comments made at that time by the World Bank and Sakenergo have been addressed. This report addressed the technical, financial and environmental aspects of the hydropower rehabilitation. Since it was decided in August 1996, by Sakenergo, that all funds should be spent on rehabilitation of the Tbilisi Thermal Electric Power Station, no further review of this report has been made.

Delivery Order No. 16 is complete. The delivery order completion dated was August 29, 1996. If there are any questions, please call me at (202) 408-6831, x14.

Sincerely,

Douglas D. Tuckhorn

Douglas D. Tuckhorn
Project Director-Caucasus

c: S. Gerges, BR (DC)(w/o attach)
T. Fecho, AEP, (OH)
P. Feeney, USAID, (T)
T. Jugeli, Sakenergo, (T)
Z. Mentashashvili, BR (T)
W. Smith, USAID, (Y)
V. Vucetic, WB, (DC)
G. Weynand, USAID (DC)
Pf: 5916, 4.5

S:\DOUG\96MEMOS\96-192.WPD

REPUBLIC OF GEORGIA STUDY

REHABILITATION OF THE COMMUNICATIONS, CONTROL AND DISPATCH SYSTEMS AND MAINTENANCE OF FOUR HYDRO PLANT SUBSTATIONS

PREPARED UNDER THE DIRECTION OF

BURNS AND ROE ENTERPRISES

PREPARED FOR AND SPONSORED BY

UNITED STATES AGENCY FOR
INTERNATIONAL DEVELOPMENT

AEP

ENERGY
SERVICES

JULY 1996

4

CONTRIBUTORS

The material contained in this report was prepared by project teams comprised of technical specialists from SAKENERGO and AEP Energy Services, Inc. SAKENERGO, headquartered in Tbilisi, Georgia, is the national utility responsible for generation and transmission operations. AEP Energy Services, Inc., headquartered in Columbus, Ohio U.S.A., provides professional engineering, design, procurement, construction management and consulting services to clients worldwide. The project was implemented under the direction of Burns and Roe Enterprises with offices located in Tbilisi, Georgia, Washington, D.C. and Oradell, New Jersey U.S.A. Financial support was provided by the United States Agency for International Development.

PROJECT MANAGEMENT

Guram Chukaseli- SAKENERGO
Thomas Fecho- AEP Energy Services, Inc.
Murman Lomtatidze - SAKENERGO
Douglas Tuckhorn- Burns and Roe Enterprises

COMMUNICATIONS, CONTROL AND DISPATCH CENTER DEVELOPMENT TEAM

SAKENERGO		AEP Energy Services, Inc.
Enver Chicua	B. Kojoridze	Patrick Collins
Omazi Dabrundashvili	Victor Mamontov	Mark Majka
T. Gotua	Turi Moderadze	Joon Park
Ilia Kalandadze	Elena Pogrebitskaya	
Raul Kankia	Zaur Tmukmadze	

HIGH VOLTAGE AND HYDRO PLANT SUBSTATION MAINTENANCE

SAKENERGO		AEP Energy Services, Inc.
Nagzar Abuladze	Avtandil Machitadze	Peter Elwell
Gia Begeladze	Sergei Martirosovitch	Abbas Mehraban
Naum Bochorishvili	Gala Molarishvili	Thuy Nguyen
Amiram Geladze	Gizo Mukbaniani	Raju Rana
Tamaz Gzirishivili	Kakha Mumladze	Thomas Shields
Konstantin Khachidze	Zurab Panchvidze	Sally Sisson
Gizo Kanchadze	Manuka Pruidze	Jay Zeek
Bagrat Kuachadze	Rodion Salukvadze	
Vahtang Kvaratskelia	Revaz Tsatskrialashvili	

TRANSLATION AND LOGISTICAL SUPPORT SERVICES

Murman Margvelashvili - Burns and Roe Enterprises

ACKNOWLEDGMENTS

This success of this project benefitted greatly from the many contributions of individuals and organizations in the Republic of Georgia and the United States of America. Although everyone who contributed to this project can not be individually recognized, the following individuals and organizations warrant special attention as a result of their generous support of this project.

The project team is especially grateful to the United States Agency for International Development which sponsored this project. The project team acknowledges the generous support of Deputy Prime Minister Zurab Kervalishvili who personally involved himself in the project and provided insight about the difficult policy choices confronting the Georgian government as it works to balance the social interests of the population with the technical requirements of the power system.

The project team acknowledges the administrative, logistical and technical support of SAKENERGO Deputy Chairman, Mr. Marlen Dzneladze, who provided insight and leadership to the technical teams of Georgian and American power system experts established to conduct this important program. The project team also acknowledges the leadership and administrative support provided by Mr. Vlado Vucetic of The World Bank and the technical contributions of Mr. Rashad Aburas of The World Bank. Finally, the project team acknowledges the technical support provided by Mr. Bernt Olausson of the United Nations.

Executive Summary

The electric power system in the Republic of Georgia is suffering from a variety of difficult problems ranging from inadequate fuel supplies to inadequate maintenance since few resources are available to maintain the power system facilities. The United States Agency for International Development, in consultation with Georgian government officials, SAKENERGO and the World Bank, is providing technical and other assistance to improve the situation.

This report presents the results of studies that are intended to provide information and recommendations that can serve as a catalyst for outside assistance to address the urgent needs to improve the operation of the power system in the Republic of Georgia. The study was conducted through a collaborative effort among SAKENERGO, AEP Energy Services, Inc. and Burns and Roe Enterprises, Inc. The project was sponsored by the U.S. Agency for International Development.

Three aspects of the power system in Georgia were evaluated in this study. First, the structure and organization of the data acquisition system (DAS) and central control center systems were reviewed. In its present state, the control and dispatch systems are nearly inoperable as a result of malfunctioning equipment. Operations personnel at the control centers have little to no real-time information available to them to monitor and control power system operations. Second, in order to address the urgent need to restore the control center function within SAKENERGO, the communications infrastructure was reviewed with a view toward restoring or improving communications: 1) between the Tbilisi and Kutaisi central control centers, 2) between those central control centers and local dispatch centers and 3) between those centers and remote substation and power plants. Finally, the high voltage switchyards at four hydroelectric plants were reviewed to evaluate the scope and cost of repairs needed to maintain the substations. This latter element of the study program coordinates with work undertaken by the Harza Engineering Company.

Section 2 of the report presents the results of studies to assess the scope and cost of urgent work to rebuild the DAS and central control and dispatch facilities. The following highlights the scope and cost of the program to improve the data acquisition system and central dispatch centers.

Control Center and Data Acquisition Rehabilitation Program	
Program Component	**Estimated Cost ($US)**
Rehabilitate Tbilisi Control Center	995,900
Tbilisi Headquarters LAN and Workstations	301,300
Rehabilitate Kutaisi Control Center	366,850
DAS Remote Terminal Units	2,733,550
Fault Recorders	280,600
Total Control Center and DAS	**4,678,200**

The program to rehabilitate the central control centers and data acquisition system is coordinated with a plan to rehabilitate the communications infrastructure. The communications infrastructure improvement plan includes the procurement of local and long-distance radio equipment to improve communications and coordination among the central and local dispatch centers.

The following table highlights the scope and cost of the program to improve the communications infrastructure: 1) between remote facilities and the central control centers and 2) between central and local control centers. The communications rehabilitation plan is described more fully in Section 3.

Communications Improvement Program ***Power Line Carrier Rehabilitation and Radio Equipment Procurement***	
Program Component	**Estimated Cost ($US)**
Rehabilitate Power Line Carrier System	2,373,400
Tbilisi Microwave System	930,000
Kutaisi Microwave System	358,500
Long Distance Radio Equipment	57,500
Local Radio Equipment	362,250
Telephone Switch Installation (optional)	20,000
Project Management	250,000
Total Communications	**4,351,650**

The frequency of country-wide and local area blackouts has hindered economic stability and growth. The unstable power supply has also created difficulties for the civilian population. The implementation of the proposed rehabilitation program will greatly improve the operation and reliability of the Georgian power system. This should reduce social tension and provide a foundation for future economic growth. The benefits expected from implementing the communications, control and dispatch center improvement program are quantified in Section 4.

The load in the Republic of Georgia well exceeds the available generation. A regime of power rationing is implemented daily to supply population centers and critical loads. As such, the maintenance and availability of generation resources and the reliability of the transmission system are vitally important in the present situation. The results of studies to assess the scope and cost of improvements required to maintain and repair equipment at high voltage switchyards associated with four hydro power plants are presented in Sections 5 to 8. The following table highlights the scope and cost of the program to improve the hydro plant high voltage substations.

8

Hydroelectric Plant High Voltage Substation Maintenance and Repair Program	
Program Component	**Estimated Cost ($US)**
Lajanuri Substation	731,515
Khrami II Substation	3,720,420
Tkibuli Substation	1,199,450
Vartsikhe Substation	1,447,750
Total	**7,099,135**

The recommendations contained in this report address just a few of the many areas requiring maintenance or capital improvements. This program of improvements, designed to address the urgent needs of the communications, control and dispatch systems and the maintenance of the four hydro plant high voltage substations is complemented by other work performed by the Harza Engineering Company and Burns and Roe Enterprises in collaboration with SAKENERGO. The results of that work, also sponsored by the United States Agency for International Development, is summarized in companion reports prepared by those organizations.

9

TABLE OF CONTENTS

			Page
1.0	*Background*		*1-1*
	1.1	*Introduction*	*1-2*
	1.2	*Study Approach*	*1-2*
2.0	*System Operation and Control Center Rehabilitation Project*		*2-1*
	2.1	*Existing Organizations of Control and Dispatch System*	*2-1*
	2.2	*Equipment Condition Assessment*	*2-1*
	2.3	*Scope of Proposed Improvement Project*	*2-5*
	2.4	*Cost of Proposed Improvement Projects*	*2-9*
	2.5	*Equipment Procurement and Sourcing Plan*	*2-13*
	2.6	*Project Implementation Schedule*	*2-14*
	2.7	*Benefits of Proposed Improvement Project*	*2-14*
	2.8	*Quantitative Indicators*	*2-17*
	2.9	*Economic Analysis of Proposed Project*	*2-17*
3.0	*Communications System Rehabilitation Program*		*3-1*
	3.1	*Background*	*3-1*
	3.2	*Overview of SAKENERGO Communications Infrastructure*	*3-2*
	3.3	*Power Line Carrier Rehabilitation and Upgrade Project*	*3-2*
	3.4	*Related Upgrade Projects to Restore Backbone Communications*	*3-9*
	3.5	*Justification for Short-Term PLC Rehabilitation Plan with Addition of Microwave Systems*	*3-16*
	3.6	*Development of Future Communications Backbone Capability*	*3-17*
	3.7	*Radio Dispatch Communications Upgrade Projects*	*3-17*
	3.8	*Telephone System Improvement Project (Optional)*	*3-20*
	3.9	*Summary of Proposed Communications Improvement Plan*	*3-21*
	3.10	*Communication Improvement Program Implementation Schedule*	*3-21*
	3.11	*Communication Equipment Procurement*	*3-23*
	3.12	*Summary of Communications System Rehabilitation Program*	*3-23*
	3.13	*Quantitative Indicators*	*3-24*
4.0	*Economic Analysis of Control Center and Communications System Rehabilitation Program*		*4-1*
	4.1	*Quantifiable and Non-quantifiable Benefits*	*4-1*
	4.2	*Economic Analysis*	*4-2*
	4.3	*Results of the Economic Analysis*	*4-6*

			Page
5.0	*Lajanuri Hydro Plant High Voltage Substation Rehabilitation Project*		*5-1*
	5.1	*Description of Lajanuri Hydro Plant and High Voltage Substation*	*5-1*
	5.2	*Scope of Rehabilitation of Lajanuri Hydro Plant Substation*	*5-1*
	5.3	*Cost of Lajanuri Plant Substation Improvements*	*5-3*
	5.4	*Equipment Procurement and Sourcing Plan*	*5-6*
	5.5	*Project Implementation Schedule*	*5-7*
	5.6	*Benefits of Lajanuri High Voltage Substation Rehabilitation Project*	*5-7*
	5.7	*Quantitative Indicators*	*5-7*
6.0	*Khrami II Hydro Plant High Voltage Substation Rehabilitation Project*		*6-1*
	6.1	*Description of Khrami II Hydro Plant and High Voltage Substation*	*6-1*
	6.2	*Scope of Rehabilitation of Khrami II Hydro Plant Substation*	*6-1*
	6.3	*Cost of Khrami II Plant Substation Improvements*	*6-4*
	6.4	*Equipment Procurement and Sourcing Plan*	*6-6*
	6.5	*Project Implementation Schedule*	*6-6*
	6.6	*Benefits of Khrami II High Voltage Substation Rehabilitation Project*	*6-6*
	6.7	*Quantitative Indicators*	*6-7*
7.0	*Tkibuli Hydro Plant High Voltage Substation Rehabilitation Project*		*7-1*
	7.1	*Description of Tkibuli Hydro Plant and High Voltage Substation*	*7-1*
	7.2	*Scope of Rehabilitation of Tkibuli Hydro Plant Substation*	*7-1*
	7.3	*Cost of Tkibuli Plant Substation Improvements*	*7-1*
	7.4	*Equipment Procurement and Sourcing Plan*	*7-6*
	7.5	*Project Implementation Schedule*	*7-6*
	7.6	*Benefits of Tkibuli High Voltage Substation Rehabilitation Project*	*7-7*
	7.7	*Quantitative Indicators*	*7-7*
8.0	*Vartsikhe Hydro Plant High Voltage Substation Rehabilitation Project*		*8-1*
	8.1	*Description of Vartsikhe Hydro Plant and High Voltage Substation*	*8-1*
	8.2	*Scope of Vartsikhe Substation Improvements*	*8-1*
	8.3	*Cost of Vartsikhe Plant Substation Improvements*	*8-1*
	8.4	*Equipment Procurement and Sourcing Plan*	*8-5*
	8.5	*Project Implementation Schedule*	*8-6*

		Page
8.6	*Benefits of Vartsikhe Substation Rehabilitation Project*	*8-6*
8.7	*Quantitative Indicators*	*8-6*

Appendix A *Control Center Procurement List*

Appendix B *Power Line Carrier Backbone Communications System*

Appendix C *Conceptual Microwave Backbone Communications System*

Appendix D *Communications Procurement List*

Appendix E *Substations Procurement List*

1.0 Background

The electric power system in the Republic of Georgia is suffering from a variety of difficult problems ranging from inadequate fuel supplies to inadequate maintenance since few resources are available to maintain generation, transmission, and distribution facilities. In particular, communications, control and dispatch systems are practically inoperable. This situation has caused system reliability to deteriorate to a level where total system blackouts are frequent. The electric load on the Georgian power system routinely exceeds power generation as evidenced by an inability to stabilize and control system frequency at 50 hertz. SAKENERGO, the National Utility, has taken operational measures to ameliorate the economic effects and human hardships of the critical electric power supply shortage. The measures include power rationing through rolling blackouts and provision of priority service whenever possible to critical loads such as water pumping stations, bakeries and hospitals. These temporary operational measures are inadequate to restore continuous service to all of SAKENERGO's consumers.

The severe electric power and energy shortage, together with other energy problems and civil unrest, has crippled the Georgian economy. The emergency energy situation in Georgia has been recognized by the international community. The United States Agency for International Development (USAID), The World Bank, United Nations, European Union, Russia and other countries and organizations around the world are providing assistance to Georgia. In December 1994, The World Bank organized a mission to assess the energy situation. That mission outlined short-term and long-term strategies to stabilize the energy sector so as to provide a foundation for a productive economy.

The United States Agency for International Development, in consultation with The World Bank, Georgian government and SAKENERGO officials, outlined three technical areas requiring immediate attention to address critical needs in the electric power sector. In brief, these areas include technical assessments of: 1) the Gardabani thermal power plant, 2) hydro power plants and related substations and, 3) control, communication and dispatch facilities. The United States Agency for International Development, under the auspices of its NIS Energy Efficiency and Market Reform Project, has sponsored work to address the three high priority technical areas related to rehabilitating and improving the electric power situation. Burns and Roe Enterprises provides the direct interface with the USAID and is coordinating and facilitating the technical studies involved in this program. The division of work among Burns and Roe Enterprises, Inc. and its contractors, AEP Energy Services, Inc. and Harza Engineering Company is the following:

Burns and Roe Enterprises, Inc. - Program Management and technical assessment studies of SAKENERGO thermal power plant rehabilitation, with emphasis on the Gardabani plant.

AEP Energy Services, Inc. - Technical assessment of SAKENERGO priority hydro plant substations and the SAKENERGO control, communication and dispatch systems.

Harza Engineering Company - Technical assessment of SAKENERGO priority hydro power plants.

In March 1995, The World Bank organized a project preparation mission to Georgia. Under sponsorship of USAID, that mission also served as the first step in establishing a collaborative program among the foregoing U.S. firms and SAKENERGO. Technical experts from AEP Energy Services, Inc, Burns and Roe Enterprises, Inc., and Harza Engineering Company participated in The World Bank March 1995 mission to identify, in more detail, the electric power sector technical issues requiring immediate attention.

This report is one of a series of reports covering the feasibility studies undertaken to assess the electric power situation and to prepare projects for consideration by The World Bank. This report presents the results of collaborative studies among AEP Energy Services, Inc. and SAKENERGO to develop projects to rehabilitate the hydro plant switchyards and the control, communication and dispatch systems. This work was sponsored by USAID under the direction of Burns and Roe Enterprises.

1.1 Introduction

This report presents the results of a feasibility study to assess the scope and cost of improvements to repair and upgrade SAKENERGO's principal system control centers and related data acquisition and communication systems. The report also describes the scope and cost of improvements needed to rehabilitate substations at four hydroelectric plants. The four hydroelectric plants covered in this study are Lajanuri, Khrami II, Tkibuli and Vartsikhe. These hydro plants were selected in consultation with Harza Engineering Company (HARZA). The results of that study are included in a companion report prepared by HARZA.

1.2 Study Approach

To accomplish the objectives of this study, a collaborative effort among teams of power system engineers in SAKENERGO and AEP Energy Services, Inc. was established. The Burns and Roe Tbilisi office facilitated the work of the teams by providing translation and related services to the technical teams. Three technical teams were established under joint direction of AEP Energy Services, Inc. and SAKENERGO management. One team was established to perform work related to improving the performance of the control centers. This team reviewed the structure of SAKENERGO's operational organizations, including the central control centers and the regional dispatch centers. The central control centers located in Tbilisi and near Kutaisi in Western Georgia at the Rioni Hydroelectric plant were inspected to observe their operation and to assess the status of equipment. The control center team jointly identified the improvements to be made to restore the system to operation.

Another joint team among SAKENERGO and AEP Energy Services, Inc. was established to collaborate on the development of plans to improve the communications system, which is essential to restore the central and regional dispatch systems to working order. This team extensively reviewed the power line carrier communications network and related communications system supporting the central dispatch and control function. The communications rehabilitation projects were developed through the collaborative effort among the AEP Energy Services, Inc. and SAKENERGO technical team.

A third team comprised of AEP Energy Services, Inc. and SAKENERGO engineers was established to assess the need for repair or rehabilitation of high voltage switchyards at four hydroelectric plants under study by HARZA. Through field inspections and joint discussions the team developed the scope and cost of improvements required to restore the hydro plant switchyards to safe working order.

The technical data and information collected through joint collaboration among the SAKENERGO and AEP Energy Services, Inc. teams provided the foundation for developing the improvement plans to rehabilitate the control and dispatch systems, related communications systems, and the scope and cost of rehabilitation of the high voltage switchyards at the Lajanuri, Khrami II, Tkibuli and Vartsikhe hydro plants.

key sites to inspect and assess the condition of the field equipment. The following summarizes the condition of the existing equipment.

2.2.1 Equipment at Tbilisi Control Center

The Tbilisi Control Center is equipped with a single Russian-made Central Processor Unit (CPU), two Remote Processor Terminals (RPT), one monitor and display board. There is also a telephone console to communicate with local operators at major power plants and substations. The display board in the dispatcher's room shows one-line diagrams of SAKENERGO's power system grid. There are digital meters to show system frequency and power flows on major transmission lines and light bulbs to show status of switching devices. The Remote Processor Terminals interface with communication equipment to receive data from the field monitoring devices at substations and power plants. The collected real-time data are passed to the CPU which, in turn, feeds selected measurements and circuit breaker data to the display board.

All of the equipment at the Tbilisi Control Center is technologically outdated. No replacement parts are available for this obsolete equipment. One RPT is currently out of service because of damage to its power supply. The single process computer only has 356 kilobytes of main memory and a total hard drive capacity of 4.8 megabytes. The RPT and CPU are subject to failure due to their age. There is no back-up computer nor is there support available from its manufacturer. If one of these devices is out of service, the whole computer system will be shut down without any back-up capability.

The Tbilisi Control Center currently receives real-time data from only three of the thirty-four field monitoring devices. Signals from other field devices are prevented from reaching the Tbilisi Control Center because of the near total breakdown of the data communications system. Because of the failure of the data acquisition systems, the Tbilisi Control Center dispatchers have no choice but to query operators in the field and rely on data received through verbal telephone conversations. Telephone communications with operators in the field are also difficult because of the unreliable telephone system.

2.2.2 Equipment at Kutaisi Control Center

The situation in the Kutaisi Control Center is no better than the Tbilisi Control Center. Presently, this control center is capable of receiving monitored data from four substations through old telemetry equipment. Since this control center has no computer equipment, the received data are directly interfaced to digital meters and indication lamps on the display board. Much like the situation at the Tbilisi Control Center, operations in this center rely on verbal communications with local dispatch offices, even though this center is functionally responsible for dispatch operations of the Western region, which spans almost half of the Georgian territory.

The Kutaisi Control Center is located at the Rioni hydroelectric plant, which has been used as the initial power source to restart the Georgian power system following major blackout conditions. Even though the Rioni plant plays a major role in system restoration following blackout conditions, there is no real-time data processing, such as data monitoring and alarm checking, at this important facility. Since the Kutaisi Control Center receives data only from

four substations, the system operators view and information received is far short of minimum data requirements for orderly system restoration.

2.2.3 Equipment at Power Plants and Major Substations

Currently, 34 substations and power plants are equipped with Russian-made data acquisition equipment to support SAKENERGO's operation centers. This equipment is an aging electro-mechanical device interfacing with various field instrumentation systems to collect data, such as status of switching devices and measurements of power flows and system voltage, by using signal cables. The collected data are transmitted to the master system at the Tbilisi Control Center and other Regional Dispatch Centers. A pair of cables is used to connect this monitoring device to the local communication facility and a power line carrier system is exclusively used as a communication media for data transmission. The data transmission speed is 50 to 80 bits per second which is unacceptably low for data communications.

Monitoring devices at four locations are currently out-of-service. Neither support nor spare parts to repair these devices are available from the original Russian manufacturer. Since these obsolete devices provide very limited data and most of the existing devices have no expansion capacity, major equipment installed recently, such as 500 kV transformers, circuit breakers, and interconnection points with neighboring countries are not monitored.

The existing monitoring devices are powered by the station service A.C. power source. This makes the electronics of the monitoring devices vulnerable to switching surge or lightning induced transient voltages from the station power source. Without D.C. power supply, the monitoring capability is lost in a black-out condition which requires more system monitoring data than normal conditions. In this crisis period, partial or complete blackouts of the Georgian power system occur frequently.

2.2.4 Fault Recorders

The SAKENERGO system has experienced 114 incidents of line outages on their 500 kV, 330 kV and 220 kV transmission systems during the first 8 months of 1995. It was reported that line faults were one of the major contributing factors to these outages and many of these faults caused regional or entire country blackouts. When a fault occurs, currently it takes several days to identify the source of the fault on the transmission line due to the lack of fault recording equipment.

Without fault recorders at critical locations across the system, data are not captured for after-the-fact or post-mortem analyses. Such analyses of system disturbances are often required to identify the fault source or to develop operating measures to avoid the condition which caused the original disturbance. Usually these analyses must be completed before re-energizing the line in order to avoid the possibility of damaging equipment in the line restoration process. There are fifty antiquated electro-mechanical fault recording devices installed across the system, however, such devices are now working at only three locations.

17

2.0 *System Operation and Control Center Rehabilitation Project*

This project will rehabilitate SAKENERGO's malfunctioning control and dispatch systems. The dispatch center rehabilitation is designed to improve and restore the surveillance and dispatch functions in the main control centers located in Tbilisi and Kutaisi. The Tbilisi and Kutaisi Control Centers will be rehabilitated so as to provide system operators with real-time information from major power stations in Eastern and Western Georgia. This real-time information, including voltage conditions, power flows and status of switching devices, is the basis for system operators to diagnose the existing and pending conditions of the power system and to determine appropriate operating procedures in day-to-day operations. These dispatch centers will be refurbished by installation of new equipment to replace all damaged or obsolete equipment, and will be supported by new monitoring devices at the selected substations and power plants.

The project scope of work includes: (1) upgrade of communications equipment at Tbilisi and Kutaisi Control Centers, (2) installation of new computer-based master systems at the two dispatch centers, (3) replacement of monitoring devices at selected substations and power plants, and (4) replacement of fault recorders at selected substations. This work is proposed for implementation in three steps as discussed in Section 2.3.

2.1 *Existing Organizations of Control and Dispatch System*

The monitoring and control of power system operations in Georgia is performed at two main dispatch centers; Tbilisi and Kutaisi Control Centers. The Tbilisi Control Center is functionally responsible for generation control of all major power plants, monitoring and dispatch of all 220 kV and higher voltage transmission facilities, and dispatch of 110 kV and lower voltage facilities for Eastern Georgia. The Kutaisi Control Center is functionally responsible for the monitoring and dispatch of the 110 kV and lower voltage transmission facilities in the Western region of Georgia. Generation control of small hydro plants in the Western region is also performed by the Kutaisi Control Center. The dispatch function of regional distribution systems is carried out by seventeen Regional Dispatch Centers under the supervision of the Tbilisi or Kutaisi Control Center.

The Figure 2.1 shows the existing structure of the power line carrier-based data acquisition network in SAKENERGO. The RTUs in the figure are Russian-made remote monitoring devices. These devices collect real-time data on power flows, voltage levels, switching device status and equipment alarm conditions. The RTUs transmit data to control centers by using power line carrier (PLC) signals which use transmission lines as the communication media.

2.2 *Equipment Condition Assessment*

An AEP control center specialist met with SAKENERGO engineers during August and September 1995 to discuss the current situation in Georgia. These discussions, supplemented by field inspections and analyses, provided the basis to develop improvement plans, including costs and priorities. The team visited the Tbilisi and Kutaisi Control Centers and several other

18

PRESENT DAS NETWORK IN SAKENERGO

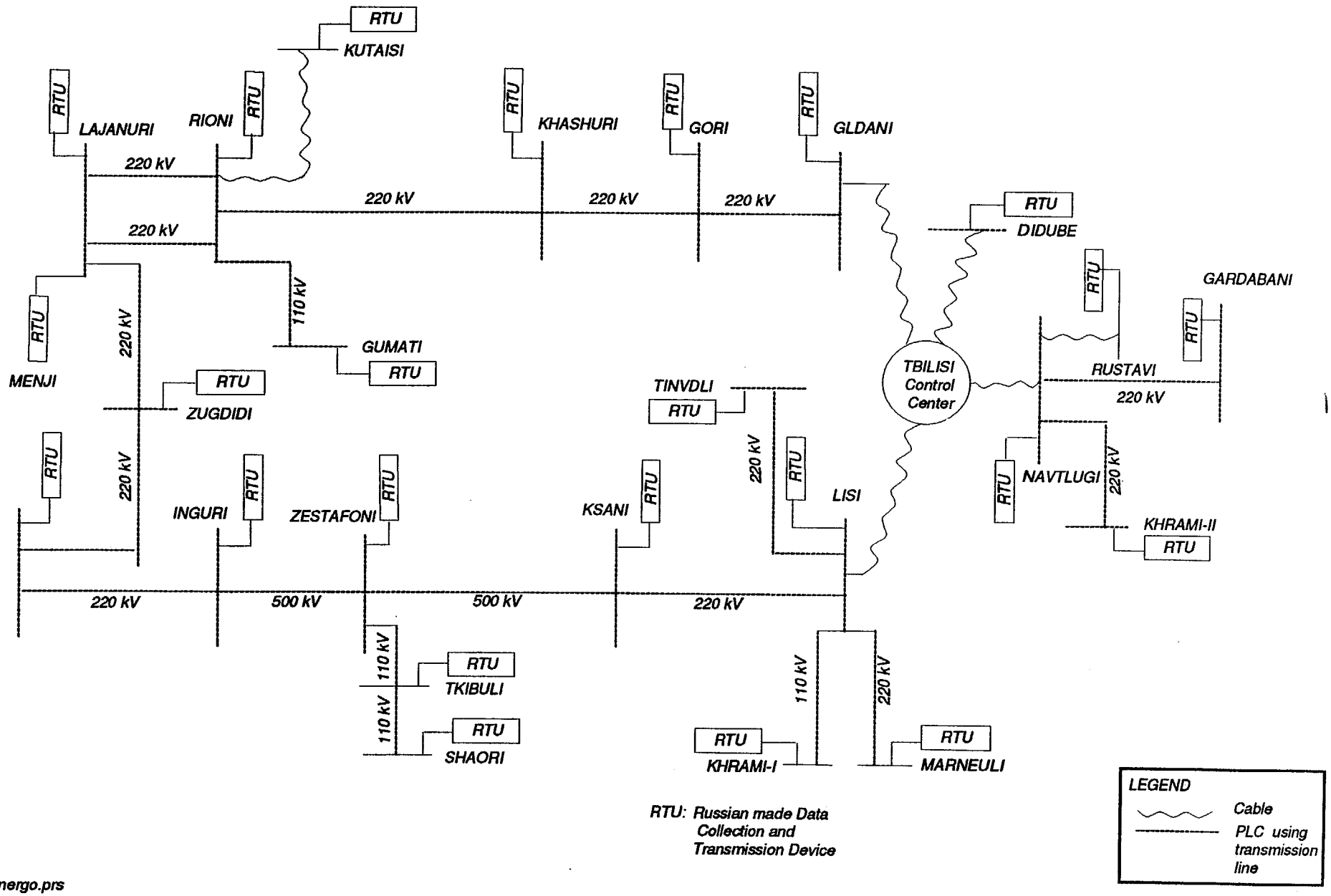

Figure 2.1

19 H:\mas\sakenergo.prs

- One local remote terminal unit to provide real time data from the new master computers to the display board
- One line printer, letter quality printer, plotter and copier machine
- Local area network hardware and software
- Uninterruptible power supply system for master system hardware
- Two engineering support PCs with dial-up modems for new digital fault recorders

The new master computer system will be designed with an open architecture from readily available, "off-the-shelf" data acquisition system software. This will allow the control center to purchase and install sufficient capability to handle the foreseeable future requirements. When expanded capability becomes necessary, additional hardware and software can be added to meet the incremental requirement. The computer system will be designed to provide a redundant feature so that when the primary computer fails, the stand-by system will automatically take over without any intervals in normal performance.

All peripheral equipment, including printers, programmer's PCs and operator's consoles, will be connected to the master computers by using the local area network (LAN) facility. The LAN-based peripheral communication system will allow SAKENERGO to add additional peripheral equipment in the future without changing the system configuration.

It was requested by SAKENERGO that the peripheral communication LAN system at the Tbilisi Control Center be expanded in order to establish a LAN system at various offices in the SAKENERGO headquarters building. To meet this request, a new LAN server system will be installed with 10 new desktop PCs and two letter quality printers. This additional LAN system will be interfaced to the control center LAN to provide the operation support staffs and managers with an access to the computer system. An appropriate security measure will need to be implemented at the server system to prevent unauthorized access to the real-time computer system.

The main computers, communication system and dispatch consoles systems will be backed up by an uninterruptible power supply to allow the equipment to be operational during power outages until the building emergency generator takes over power supply.

In addition, a separate PC-based host computer system will be established at the control center and at the office of the engineering support group to retrieve fault data when a system fault occurs. The fault data will be stored in the digital fault recorders at substations. The PC system will retrieve the data for analysis in an off-line mode by using a dial-up modem. The data will be used to help SAKENERGO engineers quickly find the fault location on the transmission lines and remove the fault source to expedite restoration of electric service.

Phase 2

Improvements at the Kutaisi Control Center are scheduled for phase 2 of project implementation. The existing telemetry equipment will be rehabilitated and maintained as a back-up system. The following new equipment will be installed at the Kutaisi Control Center;

- Two workstation-based master computers
- Two new communication front-end processors with communication equipment
- Two PC-based operator consoles with two displays each
- One PC for a programmer
- One local remote terminal unit to provide real time data from the master computers to the existing display board
- One line printer, letter quality printer and plotter
- Uninterruptible power supply system

Besides their normal functions, the Kutaisi Control Center will serve as the backup center when the Tbilisi Control Center malfunctions due to unexpected situations, such as a natural disaster or system failure. The Kutaisi Control Center will be designed to take over the dispatching functions from the Tbilisi Control Center.

Also, the redundant hardware at Kutaisi Control Center can be used for standby spare parts to support the Tbilisi Control Center. Since local services from foreign equipment suppliers will likely be unavailable in Georgia in the near future, this type of standby spare parts stocking would be essential for reliable maintenance of the real-time system.

2.3.2 Field Monitoring Devices

New Remote Terminal Units (RTU) will be installed at the thirty-four stations to support the new master systems at the Tbilisi and Kutaisi Control Centers. Existing measurement systems will be wired to the new RTUs in parallel with the existing monitoring devices. Additional data points will be added to enhance monitoring capability of the new SAKENERGO data acquisition system, including major power equipment and interconnection points that are not currently monitored. The installation of the new remote terminal units is proposed in three steps as follows.

Phase 1

RTU Installation: The following 13 locations have been selected for phase 1 project implementation by SAKENERGO and will receive a new RTU:

Inguri Hydro, Gardabani, Ksani 500 kV, Zestafoni 500 kV, Khrami Hydro-1, Vardnili Hydro, Kutaisi 220 kV, Jinvali Hydro, Batumi 220 kV, Gurjaani, Marneuli, Lisi, and Navtlugi

2.3 *Scope of Proposed Improvement Project*

A project consisting of three major components, namely, control centers, field monitoring equipment, and fault recording system is proposed to enable SAKENERGO to better manage their currently unstable power system. It is recommended that this project be implemented in three phases.

Phase one of the project will address SAKENERGO's immediate need for their system operation and dispatch requirements by rehabilitating the Tbilisi Control Center. Also included in the first phase of the project is the replacement of high priority field equipment. Reconstruction of their main power line carrier-based communications system is required to be completed as part of this project to integrate the new field monitoring system to the new control center. Phase two of the project is intended to provide a reasonably stable system required for their day-to-day operations. Completion of phase three project will provide SAKENERGO with the minimum information to run their power system on a knowledge basis. This phased approach to project implementation will help SAKENERGO evenly distribute their manpower resources and provide enough time to learn new technology during the field installation period.

The Figure 2.3 shows a general layout of the new data acquisition system, the details of which are described in the following sections.

2.3.1 *Control Centers*

The existing equipment at the Tbilisi and Kutaisi Control Centers needs to be replaced as soon as funding becomes available. The main elements of each area and the three stages of implementation are described in the following sections.

Phase 1

As part of phase 1, the master computer system at the Tbilisi Control Center will be replaced. The present Remote Processor Terminals will be rehabilitated and maintained to receive data from the existing field monitoring devices. This will provide an interim solution until all the existing field monitoring devices are replaced. The Remote Processor Terminals will continue to feed data to the existing display board and will be interfaced with the new computer system.

The Russian made computer and its peripheral devices will be replaced by the following equipment in phase 1 of project implementation:

- Two workstation-based master computers
- Two new communication front-end processors with supporting communication equipment
- Two PC-based operator consoles with two display terminals each and one-function keyboards
- Two PCs for programmers to support new computer systems

SAKENERGO'S NEW DATA ACQUISITION SYSTEM

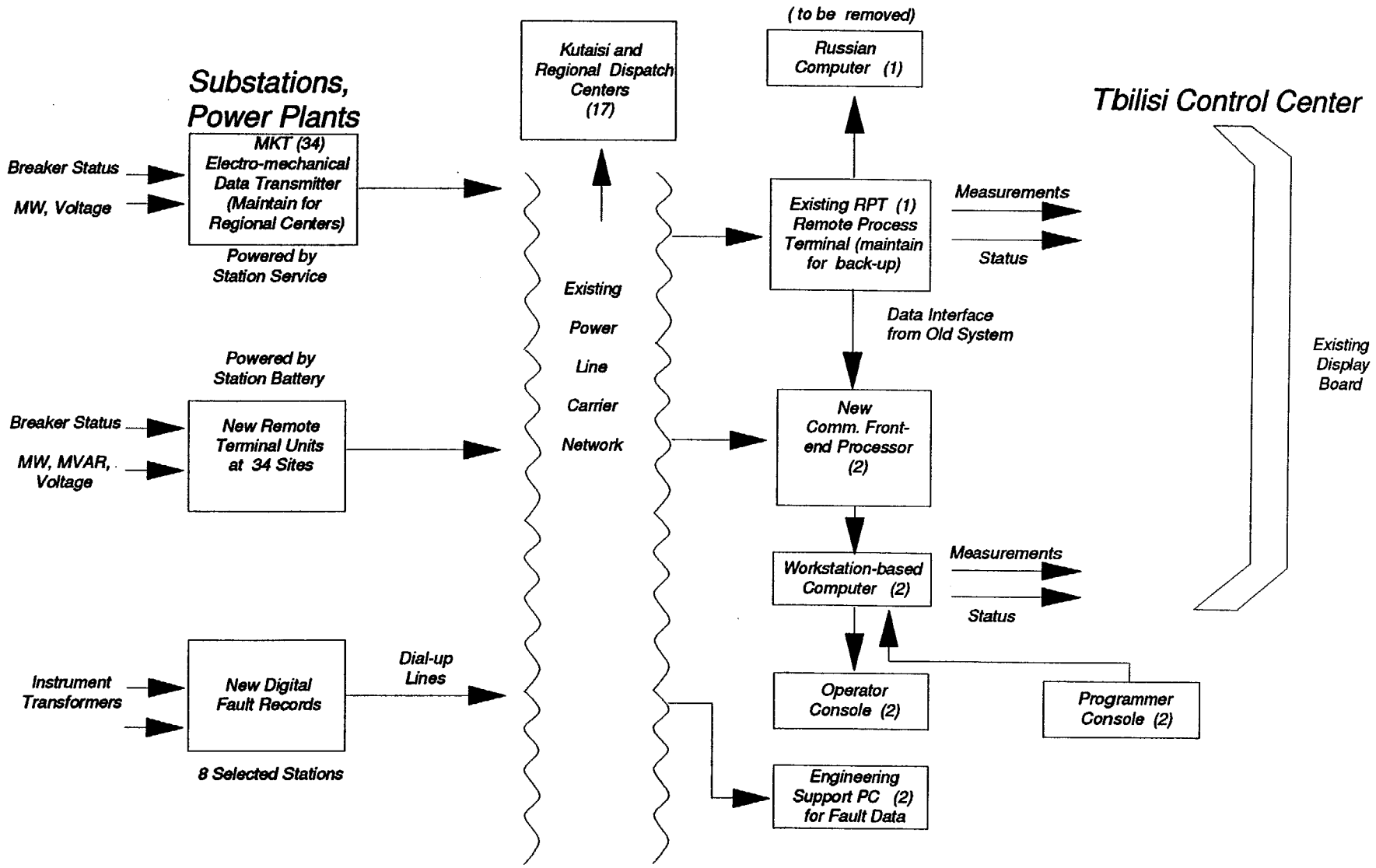

H:\mas\tbilisi .prs

Figure 2.3

22

New RTU Installation at Thirteen Locations (14 RTUs):

Major Work	Foreign Material ($)	Foreign Labor ($)	Domestic Labor ($)
RTU Hardware and Software	350,000	0	0
RTU Installation	280,000	0	5,000
Signal Cabling	140,000	0	0
Field Supervision	0	50,000	0
Training	40,000	10,000	1,000
Spare Parts and Test Equipment (Includes Portable Transducer Tester)	180,000	0	0
Subtotal	990,000	60,000	6,000

New Fault Recorder Installation at Eight Locations:

Major Work	Foreign Material ($)	Foreign Labor ($)	Domestic Labor ($)
Fault Recorder Hardware and Software	160,000	0	0
Field Installation	16,000	15,000	2,000
Training	20,000	10,000	1,000
Spare Parts	20,000	0	0
Subtotal	216,000	25,000	3,000

Phase 1 Subtotals	$2,075,000	$325,000	$28,000
Total Materials and Labor			$2,428,000
15% Contingency			$ 364,200
Total for Phase 1 Implementation			**$2,792,200**

Project - Phase 2 Implementation

Kutaisi Control Center:

Major Work	Foreign Material ($)	Foreign Labor ($)	Domestic Labor ($)
Engineering and Design	0	40,000	0
Master System Hardware and Software	200,000	0	0
Site Preparation & Installation	50,000	0	4,000
Spare Parts	25,000	0	0
Subtotal	275,000	40,000	4,000

New RTU Installation at Thirteen Locations (13 RTUs):

Major Work	Foreign Material ($)	Foreign Labor ($)	Domestic Labor ($)
RTU Hardware and Software	325,000	0	0
RTU Installation	260,000	0	4,000
Signal Cabling	130,000	0	0
Field Supervision	0	40,000	0
Spare Parts	120,000	0	0
Subtotal	835,000	40,000	4,000

Phase 2 Subtotals	$1,110,000	$80,000	$8,000
Total Materials and Labor			$1,198,000
15% Contingency			$ 179,700
Total for Phase 2 Implementation			**$1,377,700**

Notes: A second RTU will be added at the 500 kV control house of the Gardabani Station due to the distance to the 220 kV control house where the existing monitoring device is located. Currently the 500 kV switchyard has no remote monitoring capability because of the distance between the two control houses.

Digital Fault Recorder Installation: As recommended by SAKENERGO, the following eight locations will receive a new digital fault recorder:

Ksani, Gardabani, Zestafoni, Inguri, Menji, Navtlugi, Lisi and Vardnili-1

Each recorder will be equipped with a built-in printer and modem to make the fault information available locally and remotely. A new voice grade dial-up line will be added to the modem to allow the Tbilisi host computer to retrieve the fault data whenever a fault occurs.

Phase 2

Installation of new RTUs at the following thirteen stations selected by SAKENERGO:

Gldani, Gori, Zahesi Hydro, Khashuri, Rustavi 220 kV, Rioni Hydro, Khrami Hydro 2, Tkibuli Hydro, Shaori Hydro, Gumati Hydro, Lajanuri Hydro, Menji 220 kV, and Bzibi 220 kV

Phase 3

Installation of new RTUs at the remaining eight stations:

Sokhumi, Tkvarcheli, Main Channel, Didube, Vector, Tskaltubo 220 kV, Vartsikhe Hydro, and Samtredia

The existing monitoring devices will be maintained where the existing devices report data to the Kutaisi or their respective regional offices. The new RTUs and fault recorders will be powered by the station control battery system to improve reliability of the new RTUs and to prevent damage from power surges induced from the station service power source.

2.4 Cost of Proposed Improvement Projects

This section presents the budgetary estimates for the proposed control center and related system rehabilitation program. As previously noted, it is proposed to implement the program in three phases. The following presents cost estimates, in January 1996 U.S. dollars, for each stage of the improvement program.

Project - Phase 1 Implementation

Tbilisi Control Center:

A. Master Computer System

Major Work	Foreign Material ($)	Foreign Labor ($)	Domestic Labor ($)
Eng., Design & Project Management	0	200,000	0
Master System Hardware and Software	400,000	0	0
Rehabilitation of RPTs	35,000	0	5,000
Site Preparation & Installation	100,000	0	10,000
Training	40,000	20,000	2,000
Spare Parts and Test Equipment	54,000	0	0
Subtotal	629,000	220,000	17,000

B. Office LAN System

Major Work	Foreign Material ($)	Foreign Labor ($)	Domestic Labor ($)
LAN System Hardware and Software	150,000	0	0
Installation Material and Labor	60,000	20,000	2,000
Spare Parts	30,000	0	0
Subtotal	240,000	20,000	2,000

Project - Phase 3 Implementation

New RTU Installation at Eight Locations:

Major Work	Foreign Material ($)	Foreign Labor ($)	Domestic Labor ($)
RTU Hardware and Software	200,000	0	0
RTU Installation	160,000	0	2,000
Signal Cabling	80,000	0	0
Subtotal	440,000	0	2,000

Phase 3 Subtotals	$440,000	$0	$2,000
Total Materials and Labor			$442,000
15% Contingency			$ 66,300
Total for Phase 3 Implementation			**$508,300**
GRAND TOTAL PROJECT			**$4,678,200**

2.5 Equipment Procurement and Sourcing Plan

Since this system will be designed based on state-of-the-art Western computer equipment utilizing the latest data communications technology, it is recommended that engineering and design of the new system should be done by an experienced consultant firm that specializes in energy management systems for the electric utility industry. Also, this consultant should provide project management services including technical assistance for the field installation and initial start-up. Associated costs are specified as foreign labor. The consultant related services should be acquired by Direct Contract.

It is recommended that the control center equipment including the extended LAN system and remote terminal units should be purchased by International Competitive Bid (ICB) as a turn key project from one vendor. Purchase from one vendor is essential since all equipment should work as an integrated system.

The digital fault recorder system will perform its function as an independent system. Since most control center vendors do not manufacture the fault recorder equipment, this equipment should be purchased as a separate package through International Shopping (IS). Installation of digital fault recorders should be scheduled in parallel with the control center improvements.

Actual field installation of all equipment will be made by SAKENERGO's labor after appropriate training. Local labor cost was estimated at 10% of foreign labor cost. The training for the master system, RTU and fault recorders should be provided at the vendors' sites prior to the equipment delivery. Training for SAKENERGO personnel should be provided by the equipment vendors and acquired by ICB or IS as part of the master system bid.

Appendix A shows a preliminary procurement package for the proposed control center rehabilitation program.

2.6 Project Implementation Schedule

Based on the following manpower estimates, the phase 1 project can be completed in 26 months after the project starts. When the SAKENERGO engineers gain experience with the new system from the Phase 1 installation, the Phase 2 and 3 systems can be in-service 6 and 4 months thereafter, respectively.

- Project Preparation including Engineering, Design and Procurement Specification: 4 Months
- Contract Award: 3 Months
- Equipment Delivery: 6 Months
- Phase 1 Installation: 13 Months
- Phase 2 Installation: 6 Months
- Phase 3 Installation: 4 Months

The Figure 2.6 shows a preliminary schedule for this implementation plan.

2.7 Benefits of Proposed Improvement Project

It was reported that the Georgian power system has experienced twenty-seven major blackouts during the first eight months in 1995. The system frequency is unacceptably unstable, running between 45 to 48 Hertz. Interconnections with neighboring countries including Russia, Turkey, Armenia and Azerbaijan have been disconnected mainly due to the instability of the system. One of the major contributing factors for this unreliable system condition is the near total breakdown of the control and dispatch function. Currently, there is effectively no remote data monitoring facility available in the SAKENERGO power system.

The control center function based on the real-time data acquisition system is a basic tool to run the modern electric power system. Given the profound importance of electric energy to Georgian's daily lives and economic development, it is crucial that the electric power infrastructure operates reliably and securely. The proposed new system will allow SAKENERGO to improve the current condition significantly and operate the power system much more reliably. Listed below are major benefits anticipated from the new system.

1) *Improved Reliability of Power Supply*
   By monitoring system conditions in a real-time mode, dispatchers will be able to make decisions about daily operations on a knowledge basis. Real-time monitoring provides

Control Center & RTU Installation Schedule

ID	Task Name	Duration
1	**PHASE - 1 PROJECT**	0w
2	Engineering & Design	10w
3	Technical Specification	10w
4	Contract Award	12w
5	Equipment Fabrication	12w
6	Training	8w
7	Delivery of Phase-1 Equipment	6w
8	Tbilisi Center Site Preparation	8w
9	Tbilisi System Installation with LAN	30w
10	Installation of 1st 13 RTUs	30w
11	Fault Recorder Installation	22w
12	**PHASE - 2 PROJECT**	0w
13	Delivery of Phase-2 Equipment	8w
14	Kutaisi Center Site Preparation	8w
15	Kutaisi System Installation	16w
16	Installation of 2nd 13 RTUs	20w
17	**PHASE - 3 PROJECT**	0w
18	Delivery of Phase-3 Equipment	6w
19	Installation of 3rd 8 RTUs	10w
20		
21	**Comm. Rehabilitation Phase 1**	52w
22		

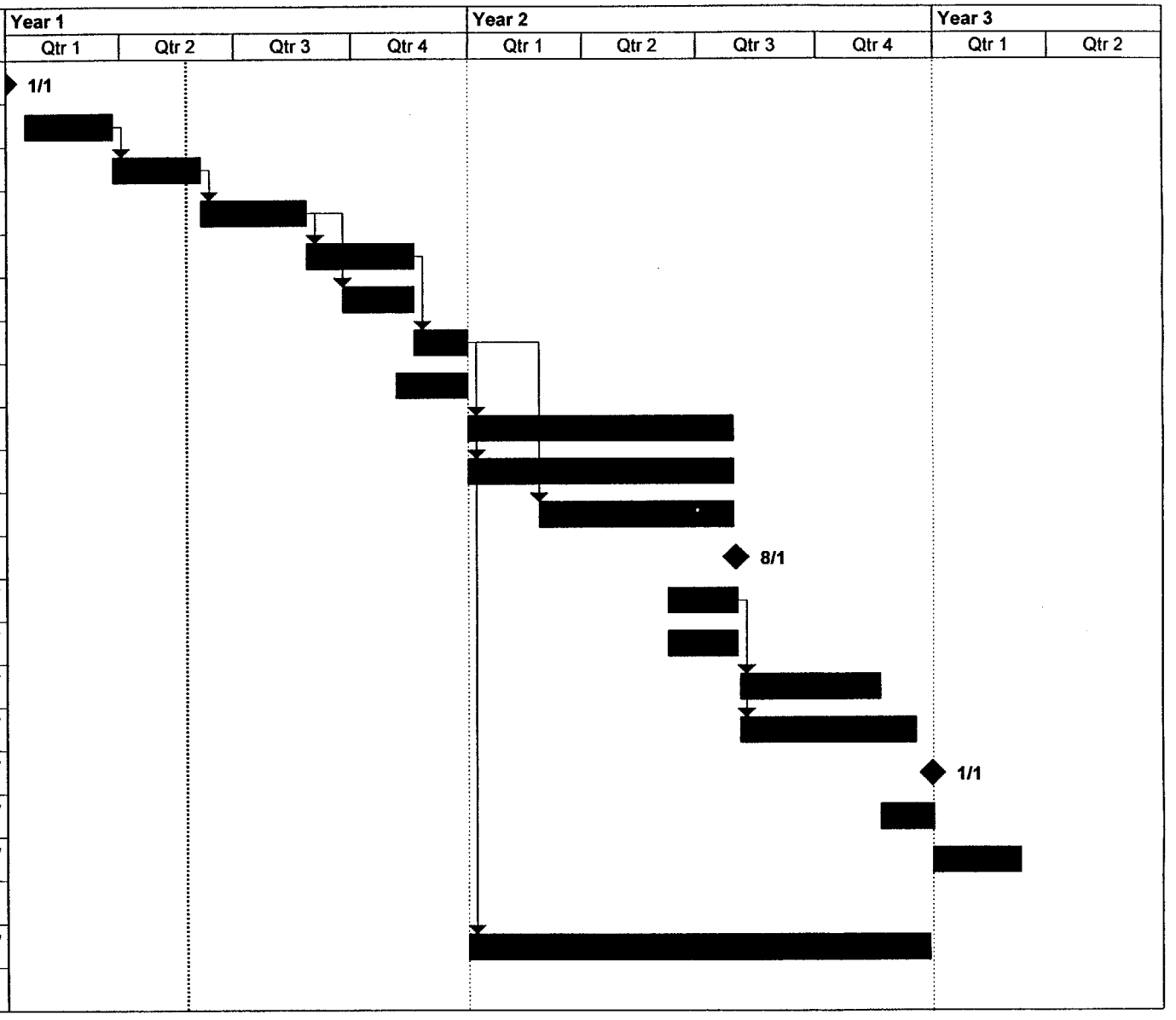

Figure 7.0

30

the ability to predict impending system problems. This capability will help system operators make faster decisions and act to more effectively avoid or correct detected operational problems. Such action can reduce the frequency of wide-area blackouts.

2) *Improvement of System Frequency*
The new control center will allow dispatchers to better balance generation and load, resulting in a significant improvement of the system frequency. This benefit is derived through increased intelligence on the status of power plants in real-time operation.

3) *Improvement of System Voltage Coordination*
One of the common problems at SAKENERGO's substations is equipment damage from abnormally high voltage. Monitoring capability from the new system will allow dispatchers to coordinate the system voltages within their limits to prevent further equipment damage.

4) *Economic Operations and System Generation Dispatch*
Stable system operation will help SAKENERGO operate and dispatch their system more economically, if adequate generation is available, by optimizing power plant fuel consumption and hydro reserves.

5) *Positive Social and Economic Effects*
Stabilization of system frequency and voltages will lead to more predictable and reliable power supply operation. Increased reliability of power supply will positively contribute to the social climate. A stable power system will also contribute to stabilizing the Georgian economy and provide a base for economic development.

6) *Reduction in Maintenance Cost of Generating Units*
Minimizing the cycling of generation units, and thus reducing equipment wear and tear will result in beneficial effects on maintenance costs, generating unit availability and generating unit life.

7) *Improved Control of Frequency and thus Opportunities for Re-Interconnection with Neighboring Power Systems*
Improved frequency regulation to reduce the daily range of frequency excursions to acceptable limits, will provide for re-interconnection with neighboring power systems and synchronous interconnected system operation.

8) *Operation Closer to Transmission Limits*
Power transmission margins on the transmission lines can be improved by better monitoring and control of power flows through generation redispatch. This is a significant benefit in that maximization of power transfer capability across existing transmission facilities can defer or avoid the need to construct additional transmission lines, substations, or power plants.

2.8 *Quantitative Indicators*

The following indicators should be monitored and measured to evaluate and quantify the major benefits of this project.

- System frequency
- Maintenance cost of generating units and plant auxiliaries
- Frequency of full or partial blackouts
- Restoration time to recover from full or partial blackouts

These suggested indicators must be monitored and recorded prior to and after this project comes in service to quantify its benefits.

2.9 *Economic Analysis of Proposed Project*

The proposed project to improve the Tbilisi and Kutaisi Control Centers is closely linked to the proposed project to improve SAKENERGO's communication system. The program to rehabilitate the SAKENERGO communication system is described in the next section. An economic analysis of the benefits to SAKENERGO and the Georgian economy resulting from implementation of this project and the related communications system rehabilitation project is presented in Section 4. That analysis clearly demonstrates the economic benefits of implementing this project, as described more fully in Section 4.

3.0 Communications System Rehabilitation Program

The proposed communications system rehabilitation program is intended to address urgent needs to restore voice and data communications within the SAKENERGO system. The communication system rehabilitation program is based on a review of the structure and condition of the existing communications network by a team of SAKENERGO and AEP Energy Services, Inc. communications engineers. The communications project team, in consultation with the control center project team, developed this plan to meet the most urgent needs for rehabilitation of the communications infrastructure.

Besides meeting the need to restore voice and data communications between system facilities and control centers, the communications improvement plan also includes components to improve radio communications between regional dispatch centers and SAKENERGO transmission and distribution personnel. This latter element of the plan is especially important given the increased need to perform manual switching operations to maintain an acceptable balance between generation and load. Improvements in radio communications between regional dispatch centers and field operations will result in more efficient and effective transmission and distribution system operations.

3.1 Background

Field inspections of communications and control center installations revealed the SAKENERGO communications network is failing and in a general state of disrepair for a variety of reasons. First, little maintenance has been performed for the last several years. Second, very few spare parts are available. Third, unstable power supplies have damaged equipment and fourth, civil strife has resulted in cannibalization and theft of equipment. This conclusion was reached following site visits to inspect facilities at major substations, hydroelectric stations and control centers. There has been virtually no maintenance performed on these systems for several years. Spare parts to repair damaged equipment are simply unavailable.

The field inspections revealed major upgrades requiring large capital investments would be required to modernize and upgrade the communications infrastructure. The proposed project, however, recognizes budgetary limitations as guided by The World Bank. Therefore, the proposed project has as its primary goal the rehabilitation or repair of the existing infrastructure so as to meet minimum requirements for reliable data and voice communication. Results of conceptual studies of major upgrades to increase the capabilities of the SAKENERGO communications systems, utilizing microwave or fiber optic technologies, have demonstrated the costs to be prohibitively expensive at $5.5 million to $9.0 million, respectively. This is $1.2 to $4.7 million more than the $4.3 million estimated cost to repair the existing power line carrier-based system as proposed herein.

The plan calls, among its several components, for the repair or rehabilitation of the power line carrier-based communications system. Power line carrier (PLC) technology operates over paths formed by the transmission lines. The present SAKENERGO system relies extensively on power line carrier technology for voice, data and relaying purposes. PLC is limited by channel capacity and data transmission speeds when compared to modern alternative technologies. The

team acknowledges the need for the upgrade of the PLC system to a more capable design based on modern microwave or fiber optic technology. Although power line carrier communications is technologically outdated, it is viewed that the rehabilitation of the existing power line carrier based system will meet the immediate, urgent need to repair and maintain the SAKENERGO communications network.

The communications team recognizes the need to further upgrade and improve the SAKENERGO communications infrastructure, however, agreement has been reached on the proposed plan which is viewed as a short-term measure to improve the situation. The rehabilitation of the PLC-based system will restore important control center functions and voice communications. A long-range goal for SAKENERGO is to commit to an extensive upgrade of the communications infrastructure, should adequate funds for such a program become available.

3.2 Overview of SAKENERGO Communications Infrastructure

The telecommunications system infrastructure is a vital part of every utility's operations since no data or voice communications can occur without it. SAKENERGO's communications system is based on power line carrier technology which has a very limited capacity in terms of channel capacity and data speeds. Almost every major substation utilizes PLC for data transfer and voice communications. Due to the fact that most of the PLC equipment is in need of repair, eighty percent of all SAKENERGO voice traffic is handled by telephone company lines, if and when those lines are in operation. To further illustrate the current extent of the breakdown of SAKENERGO's internal communication system, as previously noted in Section 2.2.1, only three of thirty-four remote terminal units (RTUs) can report information to the Tbilisi Control Center.

In addition to the power line carrier-based systems, SAKENERGO also utilizes underground cable and radio relay to meet their communication requirements. In general, as already noted, communications upkeep and maintenance has not been a priority at SAKENERGO. This is attributed to a lack of spare parts and other organizational and social problems that have beset the Company in the past several years.

The following provides specific recommendations for rehabilitating or upgrading equipment associated with the SAKENERGO communications system. This proposal includes short-term improvements which are judged to be of high priority. The major portion of the recommendation is to repair in part and to replace in part the existing power line carrier communication system. In addition to rehabilitating the PLC system, the proposal includes installation and intermixing of new, small microwave paths where heavier traffic requires greater bandwidth capabilities.

3.3 Power Line Carrier Rehabilitation and Upgrade Project

This section describes the scope and related costs to rehabilitate the main communication channels required for data acquisition and voice communications between control centers located in Eastern (Tbilisi) and Western (Kutaisi) Georgia and major power plants and substations in the SAKENERGO power system. The project consists of rehabilitating the existing power line

carrier-based communications system and the addition of some microwave equipment to increase the capability of critical links in the PLC system.

3.3.1 Power Line Carrier System -- Existing Conditions

Only three remote terminal units report back to the Tbilisi Control Center due to communication link failures. To remedy this situation, the existing power line carrier-based equipment requires immediate repair. Communication channels for voice and data are nearly non-existent due to the failure of the original PLC system. Reliance on the National telephone system for communications presents other problems since the telephone lines are also unreliable. Figure 3.3 is a one-line diagram of the 500 and 220 kV transmission network utilized for PLC-based communication.

3.3.2 Power Line Carrier Rehabilitation Plan

SAKENERGO communication specialists believe they can purchase parts for some limited portions of the power line carrier equipment, however, most of the equipment will require replacement. Line coupling capacitors, line tuners, and line traps will be required to repair portions of the system. SAKENERGO engineers report spare parts are available for the original twelve channel and three channel sets manufactured in the former Yugoslavia. The proposed plan calls for the replacement of obsolete Russian manufactured equipment for which spare parts are unavailable.

The proposed plan calls only for the repair or replacement of equipment to restore the main backbone or communication paths based on the current condition of the equipment. The plan does not include restoration of all line segments. Only the primary paths are included. The backbone communication network extends from the Western edge of the country through Inguri Hydro plant to Kutaisi, (the Western regional control center), through Zestafoni, to Ksani and on toward Tbilisi and Gardabani. There are many smaller yet important links off this main route. A station by station breakdown of all voice, data and relay circuits is included in Appendix B for further clarification. The input to develop the list of equipment to repair the primary communication paths was completed by SAKENERGO. The following tables, Table 3.3.1-Table 3.3.3, are summary listings of equipment needed and the estimated repair costs per line segment. Table 3.3.4 provides an estimated scope and cost to repair original Yugoslavian equipment. Table 3.3.5 provides a summary of costs for PLC equipment.

REPUBLIC of GEORGIA 500/330/220KV TRANSMISSION SYSTEM

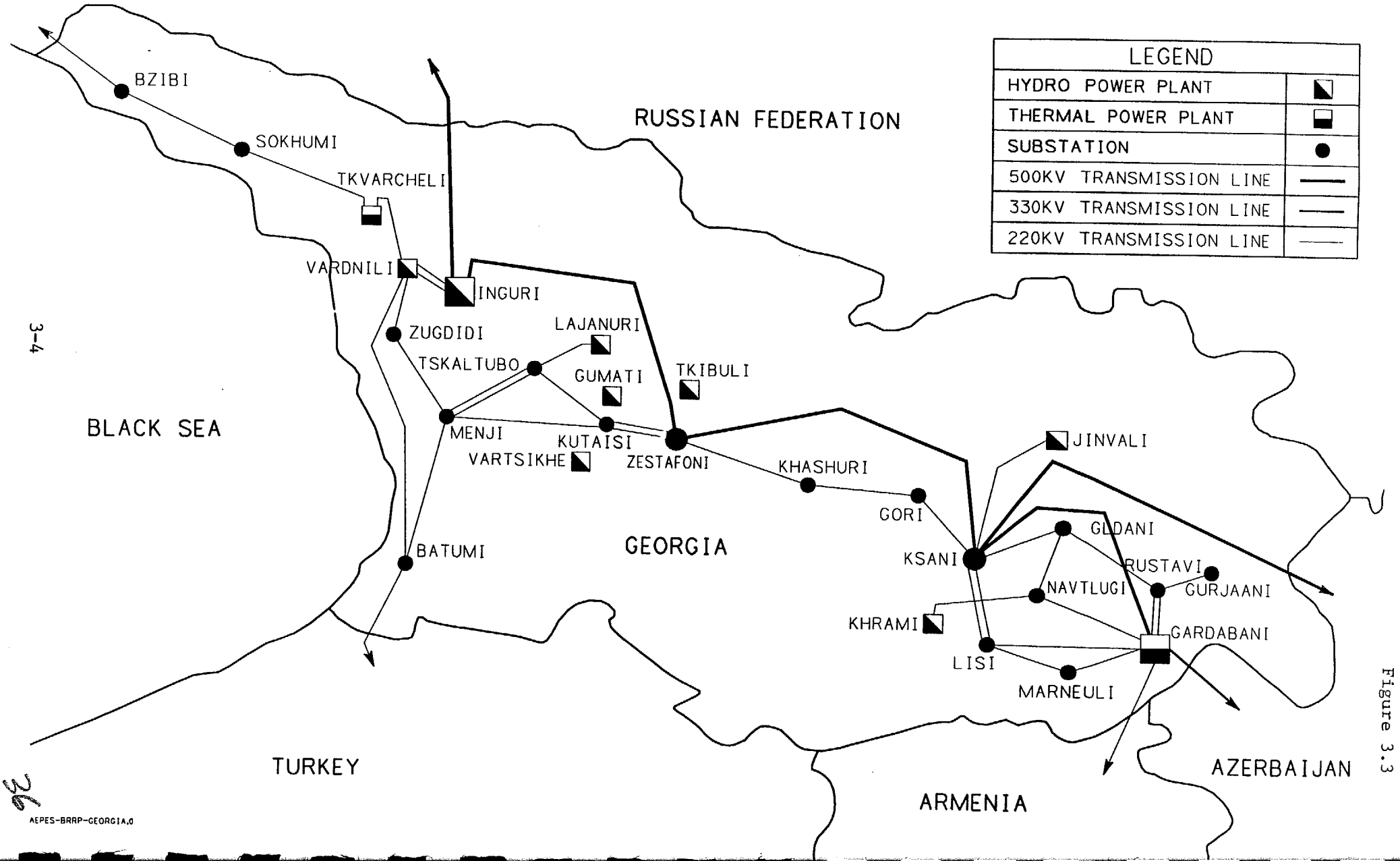

Figure 3.3

36

Table 3.3.1
Power Line Carrier Paths Utilizing 500 kV Transmission Line Segments

Circuit Name	Traps	Line Tuner	RFL* SSB Equipment	Spare Parts	Line Segment Total
Inguri-Zestafoni	2(2000A) - $9,800/ea	2-$3,000/ea	None	$10,000	$35,600
Zestafoni-Ksani	2(2000A) - $9,800/ea	2-$3,000/ea	None	$10,000	$35,600
Ksani-Gardabani	2(2000A) - $9,800/ea	2-$3,000/ea	None	None	$25,600
Grand Total (500 kV)					$96,800

*RFL is a U.S. based manufacturer of power line carrier equipment

Table 3.3.2
Power Line Carrier Paths Utilizing 220 kV Transmission Line Segments

Circuit Name	Traps	Line Tuner	RFL* SSB Equipment	Spare Parts	Line Segment Total
Bzibi-Sokhumi	2(1200A) - $6,700/ea	2-$3,000/ea	1-$20,000/ea	None	$39,400
Sokhumi-Tkvarcheli	2(1200A) - $6,700/ea	2-$3,000/ea	1-$20,000/ea	None	$39,400
Tkvarcheli-Vardnili	2(1200A) - $6,700/ea	2-$3,000/ea	1-$20,000/ea	None	$39,400
Vardnili-Inguri	2(2000A) - $9,800/ea	2-$3,000/ea	None	$5,000	$30,600
Vardnili-Zugdidi	2(1200A) - $6,700/ea	2-$3,000/ea	1-$20,000/ea	None	$39,400
Vardnili-Batumi	2(1200A) - $6,700/ea	2-$3,000/ea	1-$20,000/ea	None	$39,400
Zugdidi-Menji	2(1200A) - $6,700/ea	2-$3,000/ea	1-$20,000/ea	None	$39,400
Menji-Batumi	2(1200A) - $6,700/ea	2-$3,000/ea	1-$20,000/ea	None	$39,400
Menji-Tskaltubo	2(2000A) - $9,800/ea	2-$3,000/ea	None	None	$25,600
Menji-Kutaisi	2(1200A) - $6,700/ea	2-$3,000/ea	None	$5,000	$24,400
Tskaltubo-Lajanuri	2(1200A) - $6,700/ea	2-$3,000/ea	1-$20,000/ea	None	$39,400
Tskaltubo-Kutaisi	2(1200A) - $6,700/ea	2-$3,000/ea	1-$20,000/ea	None	$39,400
Kutaisi-Zestafoni	2(1200A) - $6,700/ea	2-$3,000/ea	1-$20,000/ea	None	$39,400
Zestafoni-Khashuri	2(1200A) - $6,700/ea	2-$3,000/ea	None	$5,000	$24,400
Khashuri-Gori	2(1200A) - $6,700/ea	2-$3,000/ea	1-$20,000/ea	$5,000	$44,400
Gori-Ksani	2(1200A) - $6,700/ea	2-$3,000/ea	1-$20,000/ea	$5,000	$44,400
Ksani-Gldani	2(2000A) - $9,800/ea	2-$3,000/ea	None	$5,000	$30,600
Ksani-Lisi	2(2000A) - $9,800/ea	2-$3,000/ea	None	$10,000	$35,600
Jinvali-Ksani	2(2000A) - $9,800/ea	2-$3,000/ea	1-$20,000/ea	None	$45,600
Gldani-Rustavi	2(1200A) - $6,700/ea	2-$3,000/ea	1-$20,000/ea	None	$39,400
Gldani-Navtlugi	2(2000A) - $9,800/ea	2-$3,000/ea	None	None	$25,600

Circuit Name	Traps	Line Tuner	RFL* SSB Equipment	Spare Parts	Line Segment Total
Navtlugi-Khrami 2	2(1200A) - $6,700/ea	2-$3,000/ea	1-$20,000/ea	None	$39,400
Navtlugi-Gardabani	2(1200A) - $6,700/ea	2-$3,000/ea	None	$5,000	$24,400
Rustavi-Gardabani	2(1200A) - $6,700/ea	2-$3,000/ea	None	None	$19,400
Rustavi-Gurjaani	2(1200A) - $6,700/ea	2-$3,000/ea	1-$20,000/ea	None	$39,400
Lisi-Marneuli	2(2000A) - $9,800/ea	2-$3,000/ea	1-$20,000/ea	None	$45,600
Marneuli-Gardabani	2(1200A) - $6,700/ea	2-$3,000/ea	None	None	$19,400
Grand Total (220 kV)					$952,200

*RFL is a U.S. based manufacturer of power line carrier equipment

Table 3.3.3
Power Line Carrier Paths Utilizing 110 kV Line Segments

Circuit Name	Traps	Line Tuner	RFL* SSB Equipment	Spare Parts	Line Segment Total
Shaori-Tkibuli	2(800A) - $5,300/ea	2-$3,000/ea	1-$20,000/ea	None	$36,600
Tkibuli-Zestafoni	2(800A) - $5,300/ea	2-$3,000/ea	1-$20,000/ea	None	$36,600
Kutaisi-Vartsikhe	2(800A) - $5,300/ea	2-$3,000/ea	1-$20,000/ea	None	$36,600
Kutaisi-Rioni	2(800A) - $5,300/ea	2-$3,000/ea	1-$20,000/ea	None	$36,600
Rioni-Gumati	2(800A) - $5,300/ea	2-$3,000/ea	1-$20,000/ea	None	$36,600
Rioni-Samtredia 1	2(800A) - $5,300/ea	2-$3,000/ea	1-$20,000/ea	None	$36,600
Samtredia 1 to 3	2(800A) - $5,300/ea	2-$3,000/ea	1-$20,000/ea	None	$36,600
Samtredia-Ozurgeti	2(800A) - $5,300/ea	2-$3,000/ea	1-$20,000/ea	None	$36,600
Ozurgeti-Batumi	2(800A) - $5,300/ea	2-$3,000/ea	1-$20,000/ea	None	$36,600
Lisi-Khrami	2(800A) - $5,300/ea	2-$3,000/ea	1-$20,000/ea	None	$36,600
Gurjaani-Telavi	2(800A) - $5,300/ea	2-$3,000/ea	1-$20,000/ea	None	$36,600
Rustavi-Mt. Arkhi	2(800A) - $5,300/ea	2-$3,000/ea	1-$20,000/ea	None	$36,600
Mt. Arkhi-Rustavi Factory	2(800A) - $5,300/ea	2-$3,000/ea	1-$20,000/ea	None	$36,600
Grand Total (110 kV)					$475,800

*RFL is a U.S. based manufacturer of power line carrier equipment

Table 3.3.4
Estimated Scope and Cost to Repair Original Yugoslavian Equipment

Part	Quantity	Price ($)	Total ($)
CCVT	30	4,000	120,000
75 ohm cable	3 km	1,000/km	3,000
Transistors	2,000	2.50	5,000
Power Supplies	20	2,500	50,000
Labor			5,000
Test Equipment			15,000
Total			198,000

Table 3.3.5
PLC Back-up Power Supply (PLC UPS)

Station	Foreign Material ($)
Rustavi	3,000
Jinvali	3,000
Qsani (Ksani)	3,000
Khrami I	3,000
Khrami II	3,000
Marneuli	3,000
Gori	3,000
Khashuri	3,000
Shaori	3,000
Tkibuli	3,000
Tskhaltubo 220	3,000
Lajanuri	3,000
Menji	3,000
Zugdidi	3,000
Vardnili	3,000
Batumi	3,000
Inguri	3,000
Total	51,000

Table 3.3.6
Total of all PLC Equipment

	Foreign Material ($)	Foreign Labor ($)	Domestic Labor ($)	Line Seg. Total ($)
500 kV	96,800	6,000	600	103,400
220 kV	952,200	54,000	5,400	1,011,600
110 kV	475,800	26,000	2,600	504,400
Repair Parts	198,000		5,000	203,000
Spare Parts	25,000			25,000
PLC UPS	51,000			51,000
Training		25,000	10,000	35,000
Subtotal	1,798,800	111,000	23,600	1,933,400
Contingency (15%)				290,000
Project Management		150,000		150,000
TOTAL				2,373,400

Note: UPS is an abbreviation for Uninterruptible Power Supply

The costs to purchase parts for the repair of existing power line carrier equipment is based on estimates supplied by SAKENERGO. New equipment to rehabilitate the power line carrier system is based on Western prices. The following assumptions were made in developing the plan and related cost estimates.

- All PLC equipment is considered to be phase-to-ground coupling and includes relay protection and voice on the same phase. This reflects accepted Western practice and lowers the total cost by eliminating unneeded sets of line tuners, traps, and Coupling Capacitor Voltage Transformers (CCVTs). Existing Georgian PLC-based systems separate functions by utilizing communication channels on more than one phase. New equipment designs and practice indicate this unnecessarily increases cost.

- Parts list for equipment originally manufactured in the former Yugoslav Republic was provided by SAKENERGO.

- All Russian-made PLC equipment assumed to be replaced.

- All new power line carrier equipment prices based on U.S prices derived from consultations with RFL (RFL is a U.S. based manufacturer of PLC equipment).

- All new PLC sets are four channel sets.

- CCVT stand included.

- All line traps and tuners to be replaced.

3.3.3 Benefits of Rehabilitating the PLC System

There are important voice and data communications capabilities that must be restored to provide paths between the existing control center MKT and the new RTUs to be installed at critical system facilities. Capacity for data and voice communications from remote facilities to the Tbilisi and Kutaisi Control Centers must be restored. This is essential given the very difficult conditions that confront SAKENERGO system operators. Furthermore, the rehabilitation of the communications system is essential to achieve the benefits associated with the control center rehabilitation plan, as described in Section 2.4. System operators currently are receiving almost no operating data in the present environment. Without reliable voice and data communications, SAKENERGO system operators are attempting to operate the electric power system under extremely difficult conditions. Rehabilitation of the PLC-based communications system will improve their effectiveness.

The replacement of old PLC equipment will avoid the future costs to maintain this obsolete system. The new power line carrier sets will come with a manufacturer's warranty and will use the latest available technology. The new equipment will have future technical support and spare parts availability. Once again, it is noted that the rehabilitation of the PLC system is viewed as a relatively inexpensive short-term solution to meet the urgent need to restore communications within the SAKENERGO system.

3.4 Related Upgrade Projects to Restore Backbone Communications

In addition to the rehabilitation of the PLC system, other improvements are needed to restore communications between the control centers and the critical generation and transmission facilities. This section describes the need, scope and cost to improve the communications between the Gardabani Thermal plant and the Tbilisi Control Center. A plan to meet the urgent need to improve the communication link between the main control centers located in East (Tbilisi) and Western (Kutaisi) Georgia is also presented.

3.4.1 Tbilisi Communications Upgrade Project -- Existing Conditions

The underground copper wire system connecting many locations around Tbilisi has been damaged or portions have been stolen. The purpose of cable system is to carry data and voice traffic to the Tbilisi Control Center from the Gardabani Thermal plant (1800 megawatts) and from several major substations around Tbilisi. The cable has very limited capacity. If the cable were not stolen or damaged, it would provide the only communication medium between these locations. SAKENERGO reported the cable has been repaired several times but continues to be a difficult problem for the reasons noted. Tbilisi is the most densely populated area in Georgia, therefore, reliability issues are magnified.

The data transmitted on this cable system is extremely important for RTU data transfer and analog voice from several large substations and the Gardabani Thermal plant. There are currently not enough voice channels available to allow plant personnel to communicate with engineers, management and project management groups in Tbilisi. The Gardabani plant will operate more frequently and at higher generation levels if the fuel supply and maintenance problems are resolved. Reliable communications between the plant and other facilities will be essential to operate the Gardabani plant with the SAKENERGO power grid.

3.4.2 Tbilisi Communications Rehabilitation Plan

The copper underground cable can be repaired as a short term fix but theft, digging, construction and other acts cause this buried cable to be damaged often. A better solution than direct replacement is sought to improve the reliability of the Tbilisi area communications. Regardless of other upgrades, SAKENERGO should maintain and repair this cable for use short-term. Over the long-term, the repaired cables can provide a path for back-up purposes.

The more reliable solution is to install a small microwave path from SAKENERGO's headquarters to the large tower nearby on the hill. From the hill tower site, separate routes to Gldani, Lisi, and Navtlugi and Gardabani Thermal plant can be established. This would be a low cost, non redundant microwave (MW) system with little room for growth or extra capacity for the future. The proposed microwave system will consist of all T1 (24 channels) capacity MW links to each site. It is a low cost solution for reliably getting data to the Tbilisi Control Center. This proposed plan is illustrated in the following diagram.

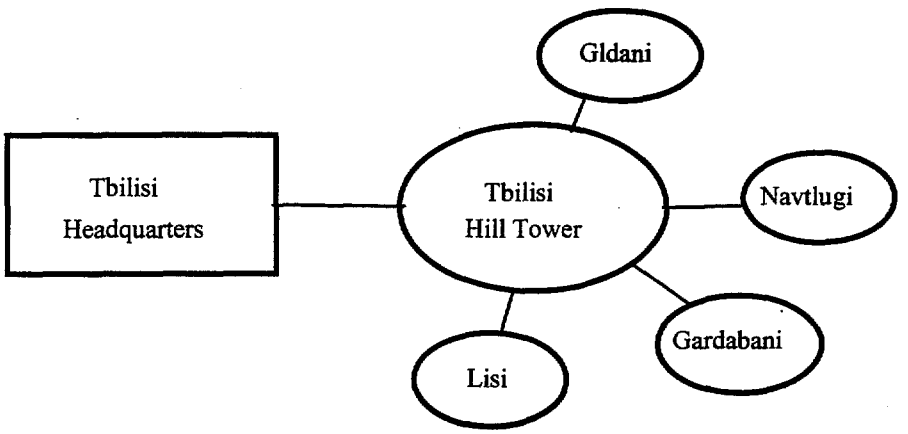

Tbilisi Microwave System

The estimated scope and cost of the microwave installations at each site and for the complete system are summarized below and in Table 3.4.2.

Major Component List (per site)	Cost Estimate (1996 U.S. $) Foreign Material	Local Material	Foreign Labor	Domestic Labor
A. Scope and Estimated Cost (per site) for Gldani, Lisi, Navtlugi and Gardabani Plant Microwave Tower Sites				
Structure				
One new tower approximately 33 meters tall	20,000			2,000
Security fence and graveled communication site		3,000		1,000
Equipment				
T1 spread Spectrum microwave radio	20,000			2,000
Channel bank	8,000			
12 kilowatt generator and transfer panel	8,000			
Station batteries and charger	7,000			
Air conditioner	1,000			
Dehydrator, wave guide and dish	16,000			
Alarm system	5,000			
Test equipment	5,000			1,000
Miscellaneous wiring, terminations, etc.				
Installation			8,000	2,000
Training			3,000	1,000
Site Design and Engineering			10,000	
Total Estimated Cost per Site	90,000	3,000	21,000	9,000
Total Cost for Four Sites	**360,000**	**24,000***	**92,000***	**36,000**

(*Includes $12,000 for buildings at Gldani and Lisi sites and $8,000 for construction labor.)

B. Commercial Tower (Leased Space)				
Equipment				
T1 spread Spectrum microwave radio	20,000			2,000
Channel bank	12,000			
12 kilowatt generator and transfer panel	8,000			
Station batteries and charger	7,000			
Air conditioner	1,000			
Dehydrator, wave guide and dish	56,000			
Alarm system	5,000			
Miscellaneous wiring, terminations, etc.				1,000
Installation			10,000	4,000
Training			3,000	1,000
Site Design and Engineering			10,000	
Total Commercial Tower Cost	**109,000**	**0**	**23,000**	**8,000**

Major Component List (per site)	Cost Estimate (1996 U.S. $) Foreign Material	Local Material	Foreign Labor	Domestic Labor
C. Tbilisi Headquarters				
Equipment				
T1 spread Spectrum microwave radio	20,000			2,000
Channel bank	8,000			
12 kilowatt generator and transfer panel	8,000			
Station batteries and charger	7,000			
Dehydrator, wave guide and dish	16,000			
Alarm system	5,000			
Miscellaneous wiring, terminations				1,000
Installation			8,000	2,000
Training			3,000	1,000
Site Design and Engineering			10,000	2,000
Total Tbilisi Headquarters Cost	**64,000**	**0**	**21,000**	**8,000**

Table 3.4.2
Total for Tbilisi Area Microwave System

	Foreign Material ($)	Local Material ($)	Foreign Labor ($)	Domestic Labor ($)	Total Cost ($)
Structure	80,000	12,000		12,000	104,000
Building (Lisi and Gldani)		12,000		8,000	20,000
Equipment	453,000	0	0	18,000	471,000
Installation			50,000	14,000	64,000
Training			18,000	6,000	24,000
Engineering			60,000	2,000	62,000
Spare Parts	20,000				20,000
Subtotal	553,000	24,000	128,000	60,000	765,000
Contingency (15%)					115,000
Project Management			50,000		50,000
Total					930,000

The estimate assumes 33 meter towers or tower extensions and no new buildings will be required. Battery and generator will be included at all sites. Tower space is assumed available on the tower on the hill. SAKENERGO must negotiate rental charges for five (5), six to eight

foot diameter grid or solid dishes to be mounted on this tower for paths to the Tbilisi headquarters, and Lisi, Gldani, Gardabani and Navtlugi tower sites. Adequate building and equipment housing space is available at the proposed Gardabani and Navtlugi microwave sites for tower construction and equipment installation. The budget estimate includes $20,000 for local materials and construction labor to erect buildings at the Gldani and Lisi sites.

3.4.3 Benefits of the Tbilisi Communications Upgrade Project

The existing communications system connection to the largest thermal power plant (1800 megawatts) relies on underground cable with data speeds of 80 bits per second. The upgrade plan provides increased channel capacity and faster data transmission rates to allow RTU data to be transferred to the Tbilisi Control Center quickly. The proposed improvements will provide more voice channels to allow plant personnel to communicate with engineers, management and project management groups in Tbilisi. Multiple parallel connections will provide engineering, construction, operations and data transmissions to occur independently and efficiently.

These six sites have multiple interfaces to the rest of the network. For example, Lisi has PLC voice connections to Khrami, Marneuli, and Ksani which in turn connect to other parts of the power system. These small microwave paths provide a low cost and reliable alternate route to the Tbilisi Control Center. These microwave connections also bypass the telephone company problems and the underground cable reliability problems. By creating hub or concentrator sites, other PLC communication channels can be routed onto the microwave system. This provides high density links to integrate with low density PLC systems.

3.4.4 Kutaisi Communications Upgrade Project -- Existing Conditions

As can be seen in Figure 3.3, there is a well developed western area and a well developed eastern area separated by a rural area. There is dense population around Tbilisi and another well populated area around Kutaisi. The transmission system has very few links between these load centers. This causes a constraint or "bottleneck" between the Eastern (Tbilisi) and Western (Kutaisi) regions. The control center at the Rioni hydro plant in Kutaisi collects most of the substation data for the western region. If the communication link between the Kutaisi Control Center and the Eastern region control center in Tbilisi is operable, the data from Kutaisi are transmitted to Tbilisi. The maximum number of channels on SAKENERGO's PLC system is twelve. The PLC system is used, however, for relay protection, RTU data and voice circuits which are all competing for the very limited channel capacity. The inadequate channel capacity creates a serious problem in transmitting data between the two control centers.

The Zestafoni 500/220/110 kV substation forms part of the communications path between the two control centers. Power line carrier-based communications equipment currently connects the Kutaisi Control Center with the major Zestafoni 500/220/110 kV substation. The existing equipment can not handle the number of communication channels required because both sites have major communications requirements. There are no reliable telephone company lease lines available. There are alternate PLC circuits from Zestafoni toward Tbilisi, however, limited capability exists from Zestafoni to Kutaisi. Several large hydroelectric plants are connected to

45

the Kutaisi Control Center in Western Georgia. Reliable communication paths must be provided between the Kutaisi Control Center and the Tbilisi Control Center to provide for the transfer of the RTU data collected at Kutaisi. Kutaisi will receive RTU data in parallel with Tbilisi and Zestafoni. A reliable communications link between the two central control centers will be provided with this improvement program.

3.4.5 Kutaisi Communications Upgrade Plan

The plan to improve the Kutaisi to Zestafoni communications link includes the development of a low cost, non-redundant microwave system. The plan is designed to minimize costs in the short-term, therefore, there is little provision for growth or to add extra capacity in the future. This plan is a low cost solution for getting the Western system data to the Tbilisi Control Center. The proposed improvement is a 4T1 (120 channel) microwave system.

The following lists the major equipment items needed and the estimated cost per site to develop the microwave system. Table 3.4.5 provides a cost summary for the complete microwave system.

	Cost Estimate (1996 U.S. $)			
Major Component List (per site)	Foreign Material	Local Material	Foreign Labor	Domestic Labor
Structure				2,000
New tower approximately 33 meters tall	20,000			1,000
Security fence and graveled communication site		3,000		
Equipment				
4T1 spread Spectrum microwave radio	30,000			3,000
Channel bank	4,000			
12 kilowatt generator and transfer panel	8,000			
Station batteries and charger	7,000			
Air conditioner	1,000			
Dehydrator, wave guide and dish	16,000			
Alarm system	5,000			
Miscellaneous wiring, terminations, etc.				1,000
Installation			8,000	2,000
Training			3,000	1,000
Site Design and Engineering			15,000	5,000
Total Estimated Cost per Site	91,000	3,000	26,000	15,000
Total System Cost (two sites)	**182,000**	**6,000**	**52,000**	**30,000**

Table 3.4.5
Total for Kutaisi-Zestafoni Microwave System

	Foreign Material ($)	Local Material ($)	Foreign Labor ($)	Domestic Labor ($)	Total Cost ($)
Structure	40,000	6,000		6,000	52,000
Equipment	142,000			8,000	150,000
Installation			16,000	4,000	20,000
Training			6,000	2,000	8,000
Engineering			30,000	10,000	40,000
Spare Parts	20,000				20,000
Subtotal	202,000	6,000	52,000	30,000	290,000
Contingency (15%)					43,500
Project Management			25,000		25,000
Total					358,500

3.4.6 Benefits of Kutaisi Communications Upgrade Plan

The proposed microwave path from Kutaisi to Zestafoni will eliminate the bottleneck and provide an alternate communications route to these major network centers. This route can also be expanded easily to add Inguri Hydro in the future if additional funds become available for that purpose. This would be a natural progression to add this major hydro generation station so as to establish a system-wide microwave backbone between Inguri and the Tbilisi Control Center. This assumes SAKENERGO can lease microwave capacity from the government from Zestafoni to Tbilisi or will continue building a private microwave system backbone.

The probability of acceptable communications between Western Georgia and Tbilisi will be greatly increased with the proposed microwave system. The reliability of data transfer between the Kutaisi Control Center, which will gather data from the RTUs to be installed in Western Georgia, and the Tbilisi Control Center will be improved. The availability of information about operations in Western Georgia will improve the ability of the system operators at the Tbilisi Control Center to respond to emergency conditions and to better plan their minute-to-minute operation and control of the system.

As previously noted in section 2, the re-establishment of communication links to and between the control centers will improve the control and dispatch functions at the Tbilisi and Kutaisi Control Centers. The transfer of RTU data and voice communications between the main facilities comprising the SAKENERGO system is essential to improve their system operation.

In addition, this microwave system, as already noted, can be extended to Inguri and other hydroelectric plants in the future. Other expansions of the proposed microwave system could include integration into the government's existing microwave system. Integration with that system would provide even more bandwidth and better reliability or redundancy.

3.5 Justification for Short-Term PLC Rehabilitation Plan with Addition of Microwave Systems

There are only three telemetering remote terminal units (MKT) currently reporting information to the Tbilisi Control Center. There are thirteen new RTUs planned to be installed as part of the first phase of the control center rehabilitation. Thirteen RTUs are proposed for installation in the second phase and eight more in the third and final phase. These RTUs must have reliable, uninterrupted communication with the host computers to allow accurate indications and status to be transferred to Kutaisi and Tbilisi.

A prior study of the SAKENERGO communications system estimated the cost of a new backbone communications network using fiber optic technology. The results of that study, conducted by AEP Energy Services, Inc., was included in a report entitled *Georgia: Power Rehabilitation Project (EBRD Interim Report prepared by the Burns and Roe Consortium)* dated July 1994. As part of this project, a conceptual study was conducted to estimate the cost of a backbone communications system using microwave technology. The results of that study are summarized in Appendix C.

The results of the studies evaluating the use of fiber optics or microwave technologies to create a backbone communications system for SAKENERGO can be contrasted with the PLC rehabilitation and microwave development plans recommended in this project. The following Table 3.5.1 summarizes the costs of the alternative communications backbone development plans. It should be noted that the highest capability is provided by the fiber optic plan, followed by the all microwave plan, followed by the blended microwave and PLC rehabilitation plan.

Table 3.5.1
Cost of Alternative Communications Backbone Plans

Option	Cost ($)
Fiber Optic Backbone	9,000,000
Microwave Backbone	5,500,000
Repair PLC System	3,661,900

As can be seen in the foregoing table, the PLC system repair is $1.8 million less than the cost of the microwave system and, most importantly, the PLC rehabilitation plan will reach many more locations. The PLC system plan, however, has significantly less channel capacity.

3.6 Development of Future Communications Backbone Capability

A government microwave system now exists that could meet some of SAKENERGO's need for increased and more reliable communications. SAKENERGO should negotiate with the government to rent or lease additional channels on the government's microwave system. For improved operation of the SAKENERGO power system, SAKENERGO needs to establish a major communication link between Tbilisi and Kutaisi. The government should recognize that reliable communication links are vital to running a power system and, furthermore, that computer links need faster data transfer rates than 80 bits per second (BPS). A 56,000 BPS circuit should be negotiated. This could be extremely important during a blackout as long as the government system has battery back-up at their microwave sites. This would allow both control centers to coordinate their actions to bring the electrical generation and transmission system on-line following a system failure. SAKENERGO explained that the government rents two channels to them currently at a cost of $500.00 per month. This charge is expensive by Western standards, however, SAKENERGO has few, if any, alternatives available to them.

SAKENERGO has explored the possibility of leasing more bandwidth to meet their communications requirements. According to SAKENERGO, the government has indicated that SAKENERGO can rent or lease 60 channels. This is a good number of channels for starting purposes and should provide capacity for the required voice and data communications needed, including some margin for growth. SAKENERGO must develop a long-term plan to install a complete digital backbone communications system. Sharing government sites in combination with continuing to build a private microwave system must be in the long-range plan for SAKENERGO.

3.7 Radio Dispatch Communications Upgrade Projects

The foregoing describes critical projects required principally to provide needed communications capabilities to rehabilitate the data acquisition system and to improve the functionality of the system control centers in Eastern and Western Georgia. The following sections describe other communications projects designed to improve both local and long-range communications among regional dispatch centers.

3.7.1 Long Distance Radio Dispatch Communications -- Existing Conditions

During blackout periods, there are limited communications available for operations personnel to coordinate their activities to bring the system back from a cold start. This project will provide radio equipment to be installed at strategic locations across the SAKENERGO system. Replacement and upgrade of radio equipment will provide the capability for major regional enterprises to communicate with the central dispatch coordinators in Tbilisi and Kutaisi.

Currently, SAKENERGO utilizes low frequency transmitter equipment that is more than twenty years old and is beyond repair. This equipment requires replacement. New technologies have rendered radio equipment relatively inexpensive. The proposed new radio equipment will operate in the frequency band of 2-30 MHz. The radios will be synthesized, multi-channel, 125 watt units with battery back-up for emergency power. Seven stations in the Kutaisi area

require improved radio equipment. The estimated cost to procure and install the radios for improved long distance communications is summarized in Table 3.7.1.

Table 3.7.1
Long Distance Radio Equipment Cost Estimate

Equipment Description	Quantity	Foreign Material ($)	Local Labor ($)	Total Cost ($)
Radio Station 2-30 MHZ	7	30,000		30,000
Power Supplies	7	10,000		10,000
Antennas and Cables	7	4,000		4,000
Installation Labor			6,000	6,000
Subtotal		44,000	6,000	50,000
Contingency (15%)				7,500
Total				57,500

This project complements other installations funded by the United States Agency for International Development (USAID). The cost estimate assumes installation by SAKENERGO personnel since experience with this equipment is being gained through the USAID initiative. The radio equipment is assumed to be similar to the equipment purchased with assistance from the USAID. This project and the USAID program will provide SAKENERGO with long-range radio communications capability.

3.7.2 Benefits of Improved Long Distance Radio Dispatch Communications

As previously noted, there have been numerous blackouts during the past year. The only long range communications capability available to SAKENERGO is short wave radio. The existing radios are extremely old and some are not in operation. The United States Agency for International Development has already provided funds to replace some of this radio equipment. These radios will be useable during blackout conditions since they will have battery back-up. The radios can be used as a last resort when there are power outages or system blackouts. These low frequency transmitters can provide voice communication capability for several hundred kilometers depending on atmospheric conditions.

3.7.3 Local Radio Dispatch Communications -- Existing Conditions

Currently there are three hundred (300), 165 MHz base stations for use in SAKENERGO and all its member enterprises for local communications and station to station communications. These are used for switching, fault detection and line restoration. There are currently 30 base stations that require replacement and can not be repaired. These stations are very old and utilize

50

vacuum tube technology. There are 96 substations in the Tbilisi area that require some minimal communications capability. These stations will have two-way radios installed for this purpose. Currently they utilize equipment manufactured in Hungary. Continued procurement of equipment from the Hungarian manufacturer would be the preferred approach since there is a large installed base. SAKENERGO has some spare parts supply and the radios are inexpensive compared to Western priced units. The following summarizes the estimated cost of the equipment required to improve local dispatch operations.

Table 3.7.3
Local Radio Equipment Cost Estimate

Equipment Description	Quantity	Foreign Material ($)	Local Labor ($)	Total Cost ($)
Base Radio Station 165 MHz	30	60,000		60,000
Substation Radios	100	150,000		150,000
Radio Test Equipment	1	25,000		25,000
Power Supplies		50,000		50,000
Installation Labor			10,000	10,000
Spare Parts		20,000		20,000
Subtotal		305,000	10,000	315,000
Contingency (15%)				47,250
Total Local Radio Equipment				362,250

Many of the existing stations have 220 volt d.c. available but may require d.c. to d.c. converters. These typically can be purchased for approximately $2,000 per unit. This cost has not been included since substation by substation inspections would be required to make a detailed analysis of battery and d.c. systems. If a.c. power is used, 220 volt a.c. to 12 volt d.c. power supplies must be purchased. These are relatively low cost devices (approximately $250.00 each without battery back-up). For this estimate, it was assumed that 12 volt d.c. power would be available at each site. In summary, the cost estimate includes $50,000 budgeted for line protection, converters and power supplies, subject to detailed specification for each site.

3.7.4 Benefits of Improved Local Radio Dispatch Communications

The thirty radio base stations, when replaced, will provide local communications for regional control centers. Even though the Tbilisi and Kutaisi Control Centers are the main dispatch centers, there are smaller regional control points where switching and line coordination for the subtransmission and distribution systems regularly take place, especially in the present operating environment. These local stations provide important "real-time" information to the major stations and control centers.

The upgrade plan will provide capability to communicate with the one hundred substations equipped with two-way radio. Every major substation is manned 24 hours per day. Substation crews perform important switching and monitoring operations and provide status indications translation to the Tbilisi or Kutaisi Control Centers. Since direct operational and dispatch control via the RTU is not planned at this time, reliable real time communications are essential.

3.7.5 Summary of Radio Communications Upgrade Project

The costs of the two projects to improve the local and long-distance radio communications is summarized in table 3.7.5.

Table 3.7.5
Total Estimated Cost of all Radio Equipment

	Foreign Material ($)	Domestic Labor ($)	Total Cost ($)
Equipment	244,000		244,000
Power Supplies	60,000		60,000
Test Equipment	25,000		25,000
Spare Parts	20,000		20,000
Installation		16,000	16,000
Subtotal	349,000	16,000	365,000
Contingency (15%)			54,750
Total			419,750

3.8 Telephone System Improvement Project (Optional)

There are several old telephone systems that require replacement. Several new systems were delivered to SAKENERGO but never installed. Funds are needed to complete the installation and to train SAKENERGO personnel. The Bulgarian PBX in the Tbilisi headquarters requires installation and training expertise from the manufacturer. There is also a new telephone switch at the Gardabani plant that must be tested and installed by a qualified field service technician. This equipment is in crates at the plant. Installation of the equipment will improve voice dispatching capabilities. SAKENERGO employees recommend the return of Bulgarian installers to supervise the installation of the telephone switches. The estimated cost to install the telephone equipment is $10,000 per location.

3.9 Summary of Proposed Communications Improvement Plan

The projects contained in the communications improvement program are intended to improve SAKENERGO's communication capabilities so as to provide for more effective and efficient system operations. The total estimated cost of the proposed communications system improvement program is summarized below.

Program Component	Cost Estimate
Power Line Carrier System Rehabilitation	$2,373,400
Tbilisi Area Microwave	930,000
Kutaisi Area Microwave	358,500
Long Distance Radio	57,500
Local Distance Radio	362,250
Telephone Switch Installation	20,000
Project Management	250,000
Total Communication Improvement Program	$4,351,650

3.10 Communication Improvement Program Implementation Schedule

Depending on SAKENERGO manpower, the PLC equipment can be installed in relatively short time frames. SAKENERGO has experience with the high voltage equipment and after minimal training by the PLC provider, the electronic equipment and line interface can be installed at a rate of approximately one station per week per 5 man crew. Manufacturer training for the PLC equipment typically lasts one week. The main PLC backbone could be installed within 12 months from the date of equipment delivery. The installation schedule should coordinate with the RTU installation schedule. Remote stations or lower priority stations can be added as time and manpower availability permits.

Microwave sites can be engineered and built at a rate of one site per three months after the equipment has been delivered. The microwave communication system is a technology that SAKENERGO employees are not familiar with, therefore more training will be required relative to the PLC installation work. Figure 3.10 is a preliminary schedule illustrating the important steps for implementing the communications improvement program. Major steps include the following:

Project Preparation including Engineering, Design and Procurement Specification	5 months
Bid Solicitation and Evaluation	1 months
Contract Award	1 months
Equipment Fabrication and Delivery	4 months
Installation of PLC Equipment for Backbone	12 months
Installation of PLC Equipment Secondary Sites	12 months
Installation of Microwave Equipment	12 months
Repair of Existing Equipment	6 months

Communication Installation Schedule

ID	Task Name	Duration
1	**PHASE - 1 PROJECT**	0w
2	Engineering & Design	10w
3	Technical Specification	10w
4	Bid Evaluation & Award	8w
5	Equipment Fabrication	10w
6	Training	8w
7	Delivery of Phase-1 Equipment	6w
8	Radio Installation	52w
9	MW Site Preparation	12w
10	MW Site Construction	12w
11	1st Installation of PLCs	52w
12	MW Site Installation	24w
13	**PHASE - 2 PROJECT**	0w
14	Delivery of Phase-2 Equipment	6w
15	Station PLC Preparation	8w
16	Complete PLC Installation	52w
17	Complete Radio Installation	24w
18	Complete MW Work	20w
19	**PHASE - 3 PROJECT**	0w
20	PBX Installation	12w
21	PBX Office	12w
22		
23	**RTU Installation**	65w

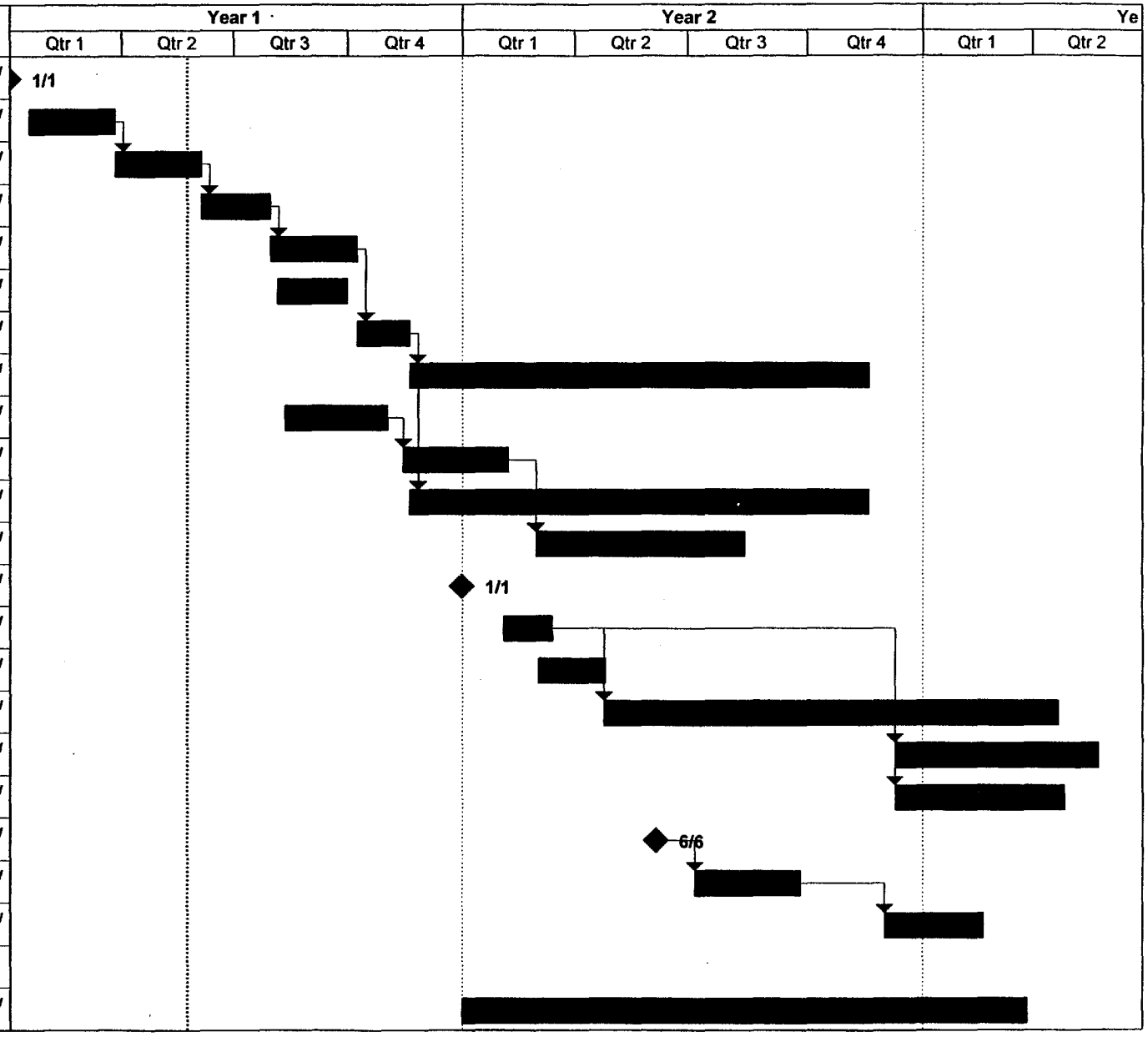

Figure 3.10

3.11 Communication Equipment Procurement

Several approaches can be followed to implement the communications system improvement program. The rehabilitation of the power line carrier-based communication system and the related Tbilisi area and Kutaisi area microwave systems can be packaged and put up for international competitive bid as a turnkey project. An alternative approach would be to divide the project into two components. One component would be the project management and engineering design. The other project would be for equipment procurement and installation work. Each element could be put up for international competitive bid. Since the PLC and microwave system developments comprise an engineered system, arguments can be developed for awarding one contract through an international competitive bid process. In either case, the specification should recognize the need for parts to repair PLC equipment originally manufactured in the former Yugoslavia.

The short- and long-range radio equipment can be procured through international shopping. It is, however, highly recommended that the radio equipment be similar to the radios purchased recently through the USAID program. SAKENERGO is already familiar with that equipment. It is expected that SAKENERGO can easily install the radio equipment since it is already in use or is in the installation process following procurement through the USAID program.

If the installation of the telephone PBX are included in the project, it is recommended to direct contract with the original equipment manufacturer to complete their installation.

A preliminary procurement package for the proposed telecommunication rehabilitation program is included in Appendix D.

3.12 Summary of Communications System Rehabilitation Program

This communication system rehabilitation program will require the purchase of new technology, spare parts, test equipment and training. SAKENERGO employees are highly technical, dedicated and competent. It is expected that new technologies and equipment can be introduced easily provided appropriate training and documentation is made available to SAKENERGO personnel. Shadowing American engineers and technicians will be an important step in the training process so that SAKENERGO personnel can view and understand new technologies and maintenance practices. This will require visits to the U.S. to see American manufacturing companies and utilities to view how they wire, install and maintain communication systems. SAKENERGO personnel have to learn to take better care of their communications equipment by performing required maintenance procedures, and by keeping communication facilities very clean.

The proposed communications improvement program consists of high priority components to restore communications capability between important installations on the SAKENERGO power system. This program is closely related to the control center rehabilitation project described in Section 2. An economic analysis of the benefits expected from implementing the proposed communication improvement program and the control center rehabilitation project is developed in the next section.

3.13 Quantitative Indicators

The following indicators should be monitored and measured to evaluate and quantify the major benefits of this project.

- System frequency
- Maintenance cost of generating units and plant auxiliaries
- Frequency of full or partial blackouts
- Restoration time to recover from full or partial blackouts

These suggested indicators must be monitored and recorded prior to and after this project comes in service to quantify its benefits.

4.0 Economic Analysis of Control Center and Communications System Rehabilitation Program

The proposed program to rehabilitate the SAKENERGO Tbilisi and Kutaisi Control Centers with related installation of remote terminal units at important plants and substations is developed in Section 2. A plan to rehabilitate and improve SAKENERGO's communications capabilities and systems is developed in Section 3. The plan calls for the rehabilitation of the power line carrier system for voice and data acquisition to improve the functionality of SAKENERGO's Control Centers and dispatch operations. The communications plan also recommends the procurement of short- and long-range radio equipment to provide for voice communication between regional dispatch centers. The two proposed projects complement each other in that the full benefits from one can not be achieved without the other.

This section of the report quantifies, to the extent possible, the economic benefits of implementing the control center and communications improvement programs. The future operation of the SAKENERGO power system is difficult to predict because many initiatives are underway to cope with the present situation. As noted in the Introduction Section, the SAKENERGO power system suffers from inadequate fuel supplies, inadequate maintenance, and inadequate funding for capital repairs and improvements. In order to perform this economic analysis, a scenario of the future developments was postulated based on information about current or possible plans to improve the situation. Since the SAKENERGO situation is evolving practically daily, it is difficult to precisely forecast what the situation will be in the next few months, let alone several years. The development of this economic analysis relies on substantially less than perfect information. The important assumptions are noted and a sensitivity study of key variables was conducted to illustrate their effect on the results of the calculations. The capital costs of the control center and data acquisition rehabilitation plan and the communications improvement plans developed in sections 2 and 3, respectively, provide the cost component of the analyses as explained below.

4.1 Quantifiable and Non-quantifiable Benefits

Before discussing the analytical approach to calculate the benefits of the proposed rehabilitation plan, it is important to state what benefits will be quantified. Numerous benefits from restoring and improving the Tbilisi and Kutaisi Control Centers and the SAKENERGO communications capabilities are noted in Sections 2 and 3. Although it is indisputable that there are numerous technical and reliability benefits to be gained by resynchronizing the SAKENERGO system with neighboring systems, for example, those benefits are difficult to quantify. Similarly, the beneficial effects from the expected improvement of voltage and frequency control and better voltage coordination are difficult to quantify but it is expected that improvement in those areas will avoid damage to electrical equipment designed to normally operate within a well-regulated range of voltage and frequency.

The analysis in this section quantifies the benefits expected as they relate to the following: 1) reduced number of country-wide blackouts (27 were reported in 1995 through the month of August) attributable to expected improvements in system operations following restoration of the

control center functions and, 2) expected decreases in the time to recover from system-wide blackouts.

The unreliable electric power supply system in Georgia is costing the economy of Georgia much as reported by The World Bank and other institutions. The Georgian gross domestic product is now estimated to be approximately twenty to twenty-five percent of levels experienced just a few years ago. This cost is in addition to the widespread hardship suffered by the Georgian people who find themselves under a power rationing regime. The following explains the analytical approach developed to quantify the benefits, in terms of reduced outages and shortened recovery times, that are predicted from implementation of the proposed communications, control and dispatch rehabilitation program.

4.2 Economic Analysis

The economic analysis had as its goal the calculation of the economic benefits of implementing the proposed control, communication and dispatch system rehabilitation program. The results of the analysis provide economic measures of performance such as: 1) the profitability index, defined as the ratio of the present value of future benefits to the project costs, and 2) the internal rate of return which is by definition, the discount rate at which the net or total present value of the future benefits equals the net or total present value of the expected project costs.

The first step in determining the benefit/cost relationship for this project requires a calculation of the net present values of the quantifiable future benefits for comparison to the estimated present values of the costs of the proposed program. The present value of the future benefits is determined simply by discounting the future values of the benefit. The difference between the net present value of the benefits and costs provides an analytical foundation to determine whether the target rate of return is achieved. A net present value equal to or greater than zero indicates that the internal rate or return is greater than the target level. The present value analysis for the proposed program uses a 25 year horizon, which takes the analysis out through the year 2020. A discount rate of 10 percent and cash flow at the end of each period are assumed.

The results of the calculations and the sensitivity analyses are presented in Section 4.3 which follows the discussion of the costs and benefit data and formulas that are described in the next section.

4.2.1 Capital Costs and Operation and Maintenance Expenses

The costs of this program can be broken down into three components. These components are: 1) the capital cost of the control center and data acquisition system improvements, 2) the capital cost of the communications system rehabilitation and upgrades, and 3) the increased operation and maintenance costs related to the installation of new equipment associated with those projects.

The total capital cost of the control center improvement plan is estimated at $4,678,200 in 1996 U.S. dollars. This cost will be incurred over a two year period, with an estimated $2,792,200 to be spent in 1997 and $1,886,000 to be spent in 1998.

The total capital cost of the communications system rehabilitation and upgrade project is estimated at $4,351,650 in 1996 U.S. dollars. This cost also will be incurred over a two year period, with an estimated $2,000,000 to be spent in 1997 and $2,351,650 to be spent in 1998.

Operation and maintenance expenses (costs) associated with the proposed control center, and communications system improvement program are estimated at one percent of capital costs.

4.2.2 Benefits from Implementation of the Proposed Program

Avoidance of Blackouts

During the first eight months of 1995, 27 major (country-wide) blackouts of the Georgian power system were reported. A reliable supply of electricity is essential to provide power and energy to industrial and manufacturing plants, hospitals and water treatment facilities, and to meet lighting, cooking, heating and other needs. Every time a blackout occurs there are severe costs and consequences to the economy.

It is expected that the proposed project will help to reduce the number of blackouts of the Georgian power system. For this economic analysis, assumptions which are viewed to be conservative were made to quantify the benefits associated with reducing the number of system blackouts. In order to estimate the incremental effect of the proposed improvement program, a future scenario with respect to the expected number of outages had to be conceived. This scenario is part of the so-called "Do Nothing" scenario as it relates to the situation without implementing the proposed project. Given the great number of initiatives under way to improve the power supply situation, it was assumed the blackout rate will decline gradually over the next ten years as the fuel supply, generating capacity, and other problems are resolved.

The analysis of the benefits of the project assume the number of outages will decline more quickly if the proposed project is implemented. It is assumed that the proposed project, once implemented, will avoid four blackouts during the first two years (1998 and 1999), six blackouts in each of the next two years (2000 and 2001), four blackouts in each of the following two years (2002 and 2003), and three in 2004 and 2005 at which time all country-wide blackouts are eliminated. This projection is conjectural to a great extent, however, it is within the zone of reason since one could postulate somewhat greater or lesser effects on the number of blackouts if the control center and related systems were operational.

Other assumptions used in calculating the economic benefit of avoiding future blackouts are the average duration of the blackout and the average power unserved during the outage. The analysis assumed the blackout lasts for twelve hours and the average power unserved during the blackout is 500 Megawatts. The average power unserved during a blackout is a conservative estimate since the 500 Megawatt load level is approximately the minimum load level of the Georgian power system, which is currently established by the availability of generating capacity. Historic average power unserved during blackouts data were unavailable.

Increased Economic Activity

The avoidance of blackouts will benefit the Georgian economy since the disruptive effects of unreliable power supply will be avoided. The base case calculation assumed the cost to the Georgian economy associated with system blackouts is $1 per kilowatt-hour, as suggested by V. Vucetic, The World Bank. Since the true cost to the economy of system blackouts is difficult to quantify, a sensitivity analysis of the costs was conducted. The costs used in the sensitivity analysis were $0.50/KWh, $0.75/KWh, $1.00/KWh and $1.25/KWh.

The benefit to the Georgian economy of avoiding blackouts can be estimated from the following calculation:

Benefit to economy of avoiding blackouts: ($/year)	(number of avoided blackouts (number/year)) x (average duration of blackout (hours/blackout)) x (average power unserved (MW/blackout)) x (economic cost ($/MWh))

Increased SAKENERGO Revenue

During system blackouts, SAKENERGO loses the opportunity to sell power to its customers and, therefore, loses the opportunity to generate revenue. Theoretically, the avoidance of blackouts following implementation of the proposed project will increase SAKENERGO revenues. To calculate the economic benefit to SAKENERGO resulting from increased sales, similar assumptions as stated in the previous section apply. In this case, however, the increased revenue was based on $0.02/KWh, which represents an estimate of the difference between the consumer willingness to pay for electricity and the SAKENERGO costs of production.

The economic benefit of increased SAKENERGO revenue can be estimated from the following calculation:

Increased SAKENERGO revenue: ($/year)	(avoided blackouts per year (number/year)) x (average duration of blackout (hours/blackout)) x (average power unserved (MW/blackout)) x (lost revenue ($/MWh))

Reduced Restoration Time

For those times when system blackouts cannot be avoided, the proposed program will provide the expected benefit of reducing the system restoration time through enhanced communications, system operations, and control center information. Under the present situation in Georgia, when a blackout occurs the system operators often have little or no idea what has happened to cause the blackout and what the state of the power system was before the disturbance. After the blackout has occurred, operators attempt to communicate over very unreliable telephone lines and by other means in an attempt to determine the cause of the blackout. If the trouble is caused by a transmission line problem, the line will need to be surveyed manually to discover if there

has been a fault. The installation of fault recorders will improve the ability of SAKENERGO to determine the cause of the blackout.

It is expected that the proposed program will greatly improve the operations' communications and fault detection capabilities within SAKENERGO. This is expected to reduce the amount of time required to bring the power system back on-line. Reducing the duration of blackouts will benefit the economy of Georgia and increase revenue to SAKENERGO.

Several assumptions are made to estimate the economic benefits derived from reducing the blackout restoration time. The assumptions made in the analysis are judged to be conservative as the actual benefits following implementation of the proposed project could be even greater. The number of blackouts per year are assumed to decrease as noted in the previous section. The duration of the outage, without the proposed project, is expected to remain about 12 hours. Following the implementation of the proposed project, it is estimated that the time to restore the system following an outage is reduced by four hours in the first two years (1998 and 1999), six hours in the next two years (2000 and 2001), eight hours in the next two years (2002 and 2003) and ten hours thereafter. This increasing benefit, i.e. the gradual decline in the time required to restore the system following a blackout, assumes system operators learn over time as they become more familiar with using the new systems.

Two quantifiable economic benefits can be achieved through the reduction of system restoration time. First, there is increased activity in the Georgian economy. Second, there will be increased SAKENERGO revenue from increased power and energy sales.

The total economic benefit of reduced restoration time following blackouts can be determined by the sum of the following two calculations:

Benefit to Georgian economy: ($/year)	(number of blackouts (number/year)) x (average reduction in restoration time (hours/blackout)) x (average power unserved (MW/blackout)) x (cost to economy ($/MWh))
Increased SAKENERGO revenue: ($/year)	(number of blackouts (number/year)) x (average reduction in restoration time (hours/blackout)) x (average power unserved (MW/blackout)) x (lost revenue ($0.02 per KWh))

Avoided Cost of Maintaining Existing Power Line Carrier System

The existing power line carrier (PLC) system being used in Georgia is very old and technologically outdated. If this existing system were to be maintained in good working order, the system would incur annual operations and maintenance expenses estimated at approximately $50,000. The proposed installation of new and modern PLC equipment will avoid the cost of maintaining the existing system. Avoiding the costs to maintain the old equipment is an economic benefit flowing from the proposed communications improvement program.

4.3 Results of the Economic Analysis

The following presents a summary of the results of the calculations. References are made to tables which present the details of the calculations for various conditions. Table 4.3.1 presents the results of the calculations for the assumed "base case" condition. As shown in Table 4.3.1, the net present value of the costs is estimated at $7,774,700 and the net present value of the benefits is estimated at $341,254,500. This provides a net present value of benefits minus costs of $333,479,800. The profitability index or ratio of the present value of the benefits to costs is 43.9. The internal rate of return for this program is greater than 100 percent. Because the economic cost to the Georgian economy resulting from the unreliable power system is unknown, the calculations were repeated by varying that cost. The details of the calculations are presented in Tables 4.3.2 to 4.3.4 and summarized below in Table 4.3.

Table 4.3
Sensitivity of Benefits for a Change in Cost to Georgian Economy

(1) Cost to Economy ($/KWh)	(2) Net Present Value Costs (million $)	(3) Net Present Value Benefits (million $)	(3)/(2) Profitability Index	(5) Internal Rate of Return (%)
0.50	7.7747	174.2	22.4	>100
0.75	7.7747	257.7	33.1	>100
1.00	**7.7747**	**341.3**	**43.9**	**>100**
1.25	7.7747	424.8	54.6	>100

Conclusions

The results of the economic analysis indicate the internal rate of return is well above the assumed discount rate of 10% for this project. Given the largely uncertain outlook for the power system in Georgia, many more sensitivity studies can be performed based on a variety of postulated scenarios. Regardless of the scenario, however, it is expected that the proposed improvement will provide large returns since, in the present SAKENERGO environment, expenditures of rather nominal capital outlays can provide substantial benefits.

Republic of Georgia Study -- Base Scenario (Sheet 1 of 2) **Table 4.3.1**

Economic Analysis -- Constant $1996

	1996	1997	1998	1999	2000	2001	2002	2003	2004	2005	2006	2007	2008	2009
DO NOTHING SCENARIO														
Number of blackouts per year	30	27	24	21	18	15	12	9	6	3	0	0	0	0
Average duration of blackout (hours)	12	12	12	12	12	12	12	12	12	12	12	12	12	12
Average power unserved during blackout (Megawatts)	500	500	600	600	700	700	800	800	900	900	1000	1000	1000	1000
EFFECTS OF PROPOSED PROGRAM														
COSTS														
Capital (in $000) -- System Operation & Control Center	0	2792.0	1886.0	0	0	0	0	0	0	0	0	0	0	0
Capital (in $000) -- Communications System	0	2000.0	2351.0	0	0	0	0	0	0	0	0	0	0	0
O & M at 1% of capital (in $000)	0	0	47.9	90.3	90.3	90.3	90.3	90.3	90.3	90.3	90.3	90.3	90.3	90.3
Total Costs (in $000)	0	4792	4284.9	90.3	90.3	90.3	90.3	90.3	90.3	90.3	90.3	90.3	90.3	90.3
Net Present Value of Costs (in $000)		**7774.7**												
BENEFITS														
Increased Economic Activity -- (Avoidance of Blackout Effects)														
Avoided blackouts per year	0	0	4	4	6	6	4	4	3	3	0	0	0	0
Average duration of blackout avoided (hours)	12	12	12	12	12	12	12	12	12	12	12	12	12	12
Average power unserved during blackout (Megawatts)	500	500	600	600	700	700	800	800	900	900	1000	1000	1000	1000
Cost to economy of blackout at $1/kwh (in $000)	0	0	28800	28800	50400	50400	38400	38400	32400	32400	0	0	0	0
Increased SAKENERGO Revenue -- (Avoidance of Blackout Effects)														
Avoided blackouts per year	0	0	4	4	6	6	4	4	3	3	0	0	0	0
Average duration of blackout avoided (hours)	12	12	12	12	12	12	12	12	12	12	12	12	12	12
Average power unserved during blackout (Megawatts)	500	500	600	600	700	700	800	800	900	900	1000	1000	1000	1000
SAKENERGO increased revenue at $.020/kwh (in $000)	0	0	576	576	1008	1008	768	768	648	648	0	0	0	0
Increased Economic Activity and Increased SAKENERGO Revenue -- (Reduced Outage Restoration Time)														
Number of blackouts per year	30	27	20	17	12	9	8	5	3	0	0	0	0	0
Average duration of blackout (hours)	12	12	8	8	6	6	4	4	2	2	2	2	2	2
Reduced restoration time (hours)	0	0	4	4	6	6	8	8	10	10	10	10	10	10
Average power unserved during blackout (Megawatts)	500	500	600	600	700	700	800	800	900	900	1000	1000	1000	1000
Reduced cost to economy at $1/kwh (in $000)	0	0	48000	40800	50400	37800	51200	32000	27000	0	0	0	0	0
SAKENERGO increased revenue at $.020/kwh (in $000)	0	0	960	816	1008	756	1024	640	540	0	0	0	0	0
Total benefit of reduced restoration time (in $000)	0	0	48960	41616	51408	38556	52224	32640	27540	0	0	0	0	0
Avoided Cost of Maintaining Existing PLC System														
O & M cost (in $000)	50	50	50	50	50	50	50	50	50	50	50	50	50	50
Total Benefits (in $000)	50	50	78386	71042	102866	90014	91442	71858	60638	33098	50	50	50	50
Net Present Value of Benefits (in $000)		**341254.5**												
Total Benefits - Costs (in $000)	50	-4742.0	74101.1	70951.7	102775.7	89923.7	91351.7	71767.7	60547.7	33007.7	-40.3	-40.3	-40.3	-40.3
Net Present Value of Benefits - Costs (in $000)		**333479.8**												
Net Present Value of Benefits / Costs		**43.9**												
Internal Rate of Return		**> 100 %**												

AEP Energy Services, Inc.
June 4, 1996
h:\trs\georgia\georgia1.wk4

BEST AVAILABLE COPY

Republic of Georgia Study -- Base Scenario (Sheet 2 of 2)

Economic Analysis -- Constant $1996

2010	2011	2012	2013	2014	2015	2016	2017	2018	2019	2020	
											DO NOTHING SCENARIO
0	0	0	0	0	0	0	0	0	0	0	Number of blackouts per year
12	12	12	12	12	12	12	12	12	12	12	Average duration of blackout (hours)
1000	1000	1000	1000	1000	1000	1000	1000	1000	1000	1000	Average power unserved during blackout (Megawatts)
											EFFECTS OF PROPOSED PROGRAM
											COSTS
0	0	0	0	0	0	0	0	0	0	0	Capital (in $000) -- System Operation & Control Center
0	0	0	0	0	0	0	0	0	0	0	Capital (in $000) -- Communications System
90.3	90.3	90.3	90.3	90.3	90.3	90.3	90.3	90.3	90.3	90.3	O & M at 1% of capital (in $000)
90.3	90.3	90.3	90.3	90.3	90.3	90.3	90.3	90.3	90.3	90.3	**Total Costs (in $000)**
											BENEFITS
											Increased Economic Activity -- (Avoidance of Blackout Effects)
0	0	0	0	0	0	0	0	0	0	0	Avoided blackouts per year
12	12	12	12	12	12	12	12	12	12	12	Average duration of blackout avoided (hours)
1000	1000	1000	1000	1000	1000	1000	1000	1000	1000	1000	Average power unserved during blackout (Megawatts)
0	0	0	0	0	0	0	0	0	0	0	Cost to economy of blackout at $1/kwh (in $000)
											Increased SAKENERGO Revenue -- (Avoidance of Blackout Effects)
0	0	0	0	0	0	0	0	0	0	0	Avoided blackouts per year
12	12	12	12	12	12	12	12	12	12	12	Average duration of blackout avoided (hours)
1000	1000	1000	1000	1000	1000	1000	1000	1000	1000	1000	Average power unserved during blackout (Megawatts)
0	0	0	0	0	0	0	0	0	0	0	SAKENERGO increased revenue at $.020/kwh (in $000)
											Increased Economic Activity and Increased SAKENERGO Revenue -- (Reduced Outage Restoration Time)
0	0	0	0	0	0	0	0	0	0	0	Number of blackouts per year
2	2	2	2	2	2	2	2	2	2	2	Average duration of blackout (hours)
10	10	10	10	10	10	10	10	10	10	10	Reduced restoration time (hours)
1000	1000	1000	1000	1000	1000	1000	1000	1000	1000	1000	Average power unserved during blackout (Megawatts)
0	0	0	0	0	0	0	0	0	0	0	Reduced cost to economy at $1/kwh (in $000)
0	0	0	0	0	0	0	0	0	0	0	SAKENERGO increased revenue at $.020/kwh (in $000)
0	0	0	0	0	0	0	0	0	0	0	Total benefit of reduced restoration time (in $000)
											Avoided Cost of Maintaining Existing PLC System
50	50	50	50	50	50	50	50	50	50	50	O & M cost (in $000)
50	50	50	50	50	50	50	50	50	50	50	**Total Benefits (in $000)**
-40.3	-40.3	-40.3	-40.3	-40.3	-40.3	-40.3	-40.3	-40.3	-40.3	-40.3	**Total Benefits - Costs (in $000)**

BEST AVAILABLE COPY

AEP Energy Services, Inc.
June 4, 1996
h:\trs\georgia\georgia1.wk4

Republic of Georgia Study -- Base Scenario (Sheet 1 of 2) **Table 4.3.2**
Sensitivity 1 -- Cost to Economy at $0.50/kwh
Economic Analysis -- Constant $1996

	1996	1997	1998	1999	2000	2001	2002	2003	2004	2005	2006	2007	2008	2009
DO NOTHING SCENARIO														
Number of blackouts per year	30	27	24	21	18	15	12	9	6	3	0	0	0	0
Average duration of blackout (hours)	12	12	12	12	12	12	12	12	12	12	12	12	12	12
Average power unserved during blackout (Megawatts)	500	500	600	600	700	700	800	800	900	900	1000	1000	1000	1000
EFFECTS OF PROPOSED PROGRAM														
COSTS														
Capital (in $000) -- System Operation & Control Center	0	2792.0	1886.0	0	0	0	0	0	0	0	0	0	0	0
Capital (in $000) -- Communications System	0	2000.0	2351.0	0	0	0	0	0	0	0	0	0	0	0
O & M at 1% of capital (in $000)	0	0	47.9	90.3	90.3	90.3	90.3	90.3	90.3	90.3	90.3	90.3	90.3	90.3
Total Costs (in $000)	0	4792	4284.9	90.3	90.3	90.3	90.3	90.3	90.3	90.3	90.3	90.3	90.3	90.3
Net Present Value of Costs (in $000)		**7774.7**												
BENEFITS														
Increased Economic Activity -- (Avoidance of Blackout Effects)														
Avoided blackouts per year	0	0	4	4	6	6	4	4	3	3	0	0	0	0
Average duration of blackout avoided (hours)	12	12	12	12	12	12	12	12	12	12	12	12	12	12
Average power unserved during blackout (Megawatts)	500	500	600	600	700	700	800	800	900	900	1000	1000	1000	1000
Cost to economy of blackout at $0.50/kwh (in $000)	0	0	14400	14400	25200	25200	19200	19200	16200	16200	0	0	0	0
Increased SAKENERGO Revenue -- (Avoidance of Blackout Effects)														
Avoided blackouts per year	0	0	4	4	6	6	4	4	3	3	0	0	0	0
Average duration of blackout avoided (hours)	12	12	12	12	12	12	12	12	12	12	12	12	12	12
Average power unserved during blackout (Megawatts)	500	500	600	600	700	700	800	800	900	900	1000	1000	1000	1000
SAKENERGO increased revenue at $.020/kwh (in $000)	0	0	576	576	1008	1008	768	768	648	648	0	0	0	0
Increased Economic Activity and Increased SAKENERGO Revenue -- (Reduced Outage Restoration Time)														
Number of blackouts per year	30	27	20	17	12	9	8	5	3	0	0	0	0	0
Average duration of blackout (hours)	12	12	8	8	6	6	4	4	2	2	2	2	2	2
Reduced restoration time (hours)	0	0	4	4	6	6	8	8	10	10	10	10	10	10
Average power unserved during blackout (Megawatts)	500	500	600	600	700	700	800	800	900	900	1000	1000	1000	1000
Reduced cost to economy at $0.50/kwh (in $000)	0	0	24000	20400	25200	18900	25600	16000	13500	0	0	0	0	0
SAKENERGO increased revenue at $.020/kwh (in $000)	0	0	960	816	1008	756	1024	640	540	0	0	0	0	0
Total benefit of reduced restoration time (in $000)	0	0	24960	21216	26208	19656	26624	16640	14040	0	0	0	0	0
Avoided Cost of Maintaining Existing PLC System														
O & M cost (in $000)	50	50	50	50	50	50	50	50	50	50	50	50	50	50
Total Benefits (in $000)	50	50	39986	36242	52466	45914	46642	36658	30938	16898	50	50	50	50
Net Present Value of Benefits (in $000)		**174195.4**												
Total Benefits - Costs (in $000)	50	-4742.0	35701.1	36151.7	52375.7	45823.7	46551.7	36567.7	30847.7	16807.7	-40.3	-40.3	-40.3	-40.3
Net Present Value of Benefits - Costs (in $000)		**166420.7**												
Net Present Value of Benefits / Costs		**22.4**												
Internal Rate of Return		**> 100 %**												

BEST AVAILABLE COPY

AEP Energy Services, Inc.
June 4, 1996
h:\tra\georgia\georgia2.wk4

Republic of Georgia Study -- Base Scenario (Sheet 2 of 2)
Sensitivity 1 -- Cost to Economy at $0.50/kwh
Economic Analysis -- Constant $1996

2010	2011	2012	2013	2014	2015	2016	2017	2018	2019	2020	
											DO NOTHING SCENARIO
0	0	0	0	0	0	0	0	0	0	0	Number of blackouts per year
12	12	12	12	12	12	12	12	12	12	12	Average duration of blackout (hours)
1000	1000	1000	1000	1000	1000	1000	1000	1000	1000	1000	Average power unserved during blackout (Megawatts)
											EFFECTS OF PROPOSED PROGRAM
											COSTS
0	0	0	0	0	0	0	0	0	0	0	Capital (in $000) -- System Operation & Control Center
0	0	0	0	0	0	0	0	0	0	0	Capital (in $000) -- Communications System
90.3	90.3	90.3	90.3	90.3	90.3	90.3	90.3	90.3	90.3	90.3	O & M at 1% of capital (in $000)
90.3	90.3	90.3	90.3	90.3	90.3	90.3	90.3	90.3	90.3	90.3	**Total Costs (in $000)**
											BENEFITS
											Increased Economic Activity -- (Avoidance of Blackout Effects)
0	0	0	0	0	0	0	0	0	0	0	Avoided blackouts per year
12	12	12	12	12	12	12	12	12	12	12	Average duration of blackout avoided (hours)
1000	1000	1000	1000	1000	1000	1000	1000	1000	1000	1000	Average power unserved during blackout (Megawatts)
0	0	0	0	0	0	0	0	0	0	0	Cost to economy of blackout at $0.50/kwh (in $000)
											Increased SAKENERGO Revenue -- (Avoidance of Blackout Effects)
0	0	0	0	0	0	0	0	0	0	0	Avoided blackouts per year
12	12	12	12	12	12	12	12	12	12	12	Average duration of blackout avoided (hours)
1000	1000	1000	1000	1000	1000	1000	1000	1000	1000	1000	Average power unserved during blackout (Megawatts)
0	0	0	0	0	0	0	0	0	0	0	SAKENERGO increased revenue at $.020/kwh (in $000)
											Increased Economic Activity and Increased SAKENERGO Revenue -- (Reduced Outage Restoration Time)
0	0	0	0	0	0	0	0	0	0	0	Number of blackouts per year
2	2	2	2	2	2	2	2	2	2	2	Average duration of blackout (hours)
10	10	10	10	10	10	10	10	10	10	10	Reduced restoration time (hours)
1000	1000	1000	1000	1000	1000	1000	1000	1000	1000	1000	Average power unserved during blackout (Megawatts)
0	0	0	0	0	0	0	0	0	0	0	Reduced cost to economy at $0.50/kwh (in $000)
0	0	0	0	0	0	0	0	0	0	0	SAKENERGO increased revenue at $.020/kwh (in $000)
0	0	0	0	0	0	0	0	0	0	0	Total benefit of reduced restoration time (in $000)
											Avoided Cost of Maintaining Existing PLC System
50	50	50	50	50	50	50	50	50	50	50	O & M cost (in $000)
50	50	50	50	50	50	50	50	50	50	50	**Total Benefits (in $000)**
-40.3	-40.3	-40.3	-40.3	-40.3	-40.3	-40.3	-40.3	-40.3	-40.3	-40.3	**Total Benefits - Costs (in $000)**

AEP Energy Services, Inc.
June 4, 1996
h:\tra\georgia\georgia2.wk4

Republic of Georgia Study -- Base Scenario (Sheet 1 of 2) **Table 4.3.3**
Sensitivity 2 -- Cost to Economy at $0.75/kwh
Economic Analysis -- Constant $1996

	1996	1997	1998	1999	2000	2001	2002	2003	2004	2005	2006	2007	2008	2009
DO NOTHING SCENARIO														
Number of blackouts per year	30	27	24	21	18	15	12	9	6	3	0	0	0	0
Average duration of blackout (hours)	12	12	12	12	12	12	12	12	12	12	12	12	12	12
Average power unserved during blackout (Megawatts)	500	500	600	600	700	700	800	800	900	900	1000	1000	1000	1000
EFFECTS OF PROPOSED PROGRAM														
COSTS														
Capital (in $000) -- System Operation & Control Center	0	2792.0	1886.0	0	0	0	0	0	0	0	0	0	0	0
Capital (in $000) -- Communications System	0	2000.0	2351.0	0	0	0	0	0	0	0	0	0	0	0
O & M at 1% of capital (in $000)	0	0	47.9	90.3	90.3	90.3	90.3	90.3	90.3	90.3	90.3	90.3	90.3	90.3
Total Costs (in $000)	0	4792	4284.9	90.3	90.3	90.3	90.3	90.3	90.3	90.3	90.3	90.3	90.3	90.3
Net Present Value of Costs (in $000)		**7774.7**												
BENEFITS														
Increased Economic Activity -- (Avoidance of Blackout Effects)														
Avoided blackouts per year	0	0	4	4	6	6	4	4	3	3	0	0	0	0
Average duration of blackout avoided (hours)	12	12	12	12	12	12	12	12	12	12	12	12	12	12
Average power unserved during blackout (Megawatts)	500	500	600	600	700	700	800	800	900	900	1000	1000	1000	1000
Cost to economy of blackout at $0.75/kwh (in $000)	0	0	21600	21600	37800	37800	28800	28800	24300	24300	0	0	0	0
Increased SAKENERGO Revenue -- (Avoidance of Blackout Effects)														
Avoided blackouts per year	0	0	4	4	6	6	4	4	3	3	0	0	0	0
Average duration of blackout avoided (hours)	12	12	12	12	12	12	12	12	12	12	12	12	12	12
Average power unserved during blackout (Megawatts)	500	500	600	600	700	700	800	800	900	900	1000	1000	1000	1000
SAKENERGO increased revenue at $.020/kwh (in $000)	0	0	576	576	1008	1008	768	768	648	648	0	0	0	0
Increased Economic Activity and Increased SAKENERGO Revenue -- (Reduced Outage Restoration Time)														
Number of blackouts per year	30	27	20	17	12	9	8	5	3	0	0	0	0	0
Average duration of blackout (hours)	12	12	8	8	6	6	4	4	2	2	2	2	2	2
Reduced restoration time (hours)	0	0	4	4	6	6	8	8	10	10	10	10	10	10
Average power unserved during blackout (Megawatts)	500	500	600	600	700	700	800	800	900	900	1000	1000	1000	1000
Reduced cost to economy at $0.75/kwh (in $000)	0	0	36000	30600	37800	28350	38400	24000	20250	0	0	0	0	0
SAKENERGO increased revenue at $.020/kwh (in $000)	0	0	960	816	1008	756	1024	640	540	0	0	0	0	0
Total benefit of reduced restoration time (in $000)	0	0	36960	31416	38808	29106	39424	24640	20790	0	0	0	0	0
Avoided Cost of Maintaining Existing PLC System														
O & M cost (in $000)	50	50	50	50	50	50	50	50	50	50	50	50	50	50
Total Benefits (in $000)	50	50	59186	53642	77666	67964	69042	54258	45788	24998	50	50	50	50
Net Present Value of Benefits (in $000)		**257724.9**												
Total Benefits - Costs (in $000)	50	-4742.0	54901.1	53551.7	77575.7	67873.7	68951.7	54167.7	45697.7	24907.7	-40.3	-40.3	-40.3	-40.3
Net Present Value of Benefits - Costs (in $000)		**249950.2**												
Net Present Value of Benefits / Costs		**33.1**												
Internal Rate of Return		**> 100 %**												

AEP Energy Services, Inc.
June 4, 1996
h:\lra\georgia\georgia3.wk4

BEST AVAILABLE COPY

Republic of Georgia Study -- Base Scenario (Sheet 2 of 2)

Sensitivity 2 -- Cost to Economy at $0.75/kwh
Economic Analysis -- Constant $1996

2010	2011	2012	2013	2014	2015	2016	2017	2018	2019	2020	
											DO NOTHING SCENARIO
0	0	0	0	0	0	0	0	0	0	0	Number of blackouts per year
12	12	12	12	12	12	12	12	12	12	12	Average duration of blackout (hours)
1000	1000	1000	1000	1000	1000	1000	1000	1000	1000	1000	Average power unserved during blackout (Megawatts)
											EFFECTS OF PROPOSED PROGRAM
											COSTS
0	0	0	0	0	0	0	0	0	0	0	Capital (in $000) -- System Operation & Control Center
0	0	0	0	0	0	0	0	0	0	0	Capital (in $000) -- Communications System
90.3	90.3	90.3	90.3	90.3	90.3	90.3	90.3	90.3	90.3	90.3	O & M at 1% of capital (in $000)
90.3	90.3	90.3	90.3	90.3	90.3	90.3	90.3	90.3	90.3	90.3	**Total Costs (in $000)**
											BENEFITS
											Increased Economic Activity -- (Avoidance of Blackout Effects)
0	0	0	0	0	0	0	0	0	0	0	Avoided blackouts per year
12	12	12	12	12	12	12	12	12	12	12	Average duration of blackout avoided (hours)
1000	1000	1000	1000	1000	1000	1000	1000	1000	1000	1000	Average power unserved during blackout (Megawatts)
0	0	0	0	0	0	0	0	0	0	0	Cost to economy of blackout at $0.75/kwh (in $000)
											Increased SAKENERGO Revenue -- (Avoidance of Blackout Effects)
0	0	0	0	0	0	0	0	0	0	0	Avoided blackouts per year
12	12	12	12	12	12	12	12	12	12	12	Average duration of blackout avoided (hours)
1000	1000	1000	1000	1000	1000	1000	1000	1000	1000	1000	Average power unserved during blackout (Megawatts)
0	0	0	0	0	0	0	0	0	0	0	SAKENERGO increased revenue at $.020/kwh (in $000)
											Increased Economic Activity and Increased SAKENERGO Revenue -- (Reduced Outage Restoration Time)
0	0	0	0	0	0	0	0	0	0	0	Number of blackouts per year
2	2	2	2	2	2	2	2	2	2	2	Average duration of blackout (hours)
10	10	10	10	10	10	10	10	10	10	10	Reduced restoration time (hours)
1000	1000	1000	1000	1000	1000	1000	1000	1000	1000	1000	Average power unserved during blackout (Megawatts)
0	0	0	0	0	0	0	0	0	0	0	Reduced cost to economy at $0.75/kwh (in $000)
0	0	0	0	0	0	0	0	0	0	0	SAKENERGO increased revenue at $.020/kwh (in $000)
0	0	0	0	0	0	0	0	0	0	0	Total benefit of reduced restoration time (in $000)
											Avoided Cost of Maintaining Existing PLC System
50	50	50	50	50	50	50	50	50	50	50	O & M cost (in $000)
50	50	50	50	50	50	50	50	50	50	50	**Total Benefits (in $000)**
-40.3	-40.3	-40.3	-40.3	-40.3	-40.3	-40.3	-40.3	-40.3	-40.3	-40.3	**Total Benefits - Costs (in $000)**

BEST AVAILABLE COPY

AEP Energy Services, Inc.
June 4, 1996
h:\re\georgia\georgia3.wk4

68

Republic of Georgia Study -- Base Scenario (Sheet 1 of 2) **Table 4.3.4**
Sensitivity 3 -- Cost to Economy at $1.25/kwh
Economic Analysis -- Constant $1996

	1996	1997	1998	1999	2000	2001	2002	2003	2004	2005	2006	2007	2008	2009
DO NOTHING SCENARIO														
Number of blackouts per year	30	27	24	21	18	15	12	9	6	3	0	0	0	0
Average duration of blackout (hours)	12	12	12	12	12	12	12	12	12	12	12	12	12	12
Average power unserved during blackout (Megawatts)	500	500	600	600	700	700	800	800	900	900	1000	1000	1000	1000
EFFECTS OF PROPOSED PROGRAM														
COSTS														
Capital (in $000) -- System Operation & Control Center	0	2792.0	1886.0	0	0	0	0	0	0	0	0	0	0	0
Capital (in $000) -- Communications System	0	2000.0	2351.0	0	0	0	0	0	0	0	0	0	0	0
O & M at 1% of capital (in $000)	0	0	47.9	90.3	90.3	90.3	90.3	90.3	90.3	90.3	90.3	90.3	90.3	90.3
Total Costs (in $000)	0	4792	4284.9	90.3	90.3	90.3	90.3	90.3	90.3	90.3	90.3	90.3	90.3	90.3
Net Present Value of Costs (in $000)		**7774.7**												
BENEFITS														
Increased Economic Activity -- (Avoidance of Blackout Effects)														
Avoided blackouts per year	0	0	4	4	6	6	4	4	3	3	0	0	0	0
Average duration of blackout avoided (hours)	12	12	12	12	12	12	12	12	12	12	12	12	12	12
Average power unserved during blackout (Megawatts)	500	500	600	600	700	700	800	800	900	900	1000	1000	1000	1000
Cost to economy of blackout at $1.25/kwh (in $000)	0	0	36000	36000	63000	63000	48000	48000	40500	40500	0	0	0	0
Increased SAKENERGO Revenue -- (Avoidance of Blackout Effects)														
Avoided blackouts per year	0	0	4	4	6	6	4	4	3	3	0	0	0	0
Average duration of blackout avoided (hours)	12	12	12	12	12	12	12	12	12	12	12	12	12	12
Average power unserved during blackout (Megawatts)	500	500	600	600	700	700	800	800	900	900	1000	1000	1000	1000
SAKENERGO increased revenue at $.020/kwh (in $000)	0	0	576	576	1008	1008	768	768	648	648	0	0	0	0
Increased Economic Activity and Increased SAKENERGO Revenue -- (Reduced Outage Restoration Time)														
Number of blackouts per year	30	27	20	17	12	9	8	5	3	0	0	0	0	0
Average duration of blackout (hours)	12	12	8	8	6	6	4	4	2	2	2	2	2	2
Reduced restoration time (hours)	0	0	4	4	6	6	8	8	10	10	10	10	10	10
Average power unserved during blackout (Megawatts)	500	500	600	600	700	700	800	800	900	900	1000	1000	1000	1000
Reduced cost to economy at $1.25/kwh (in $000)	0	0	60000	51000	63000	47250	64000	40000	33750	0	0	0	0	0
SAKENERGO increased revenue at $.020/kwh (in $000)	0	0	960	816	1008	756	1024	640	540	0	0	0	0	0
Total benefit of reduced restoration time (in $000)	0	0	60960	51816	64008	48006	65024	40640	34290	0	0	0	0	0
Avoided Cost of Maintaining Existing PLC System														
O & M cost (in $000)	50	50	50	50	50	50	50	50	50	50	50	50	50	50
Total Benefits (in $000)	50	50	97586	88442	128066	112064	113842	89458	75488	41198	50	50	50	50
Net Present Value of Benefits (in $000)		**424784.1**												
Total Benefits - Costs (in $000)	50	-4742.0	93301.1	88351.7	127975.7	111973.7	113751.7	89367.7	75397.7	41107.7	-40.3	-40.3	-40.3	-40.3
Net Present Value of Benefits - Costs (in $000)		**417009.4**												
Net Present Value of Benefits / Costs		**54.6**												
Internal Rate of Return		**> 100 %**												

AEP Energy Services, Inc.
June 4, 1996
h:\tra\georgia\georgia4.wk4

BEST AVAILABLE COPY

Republic of Georgia Study -- Base Scenario (Sheet 2 of 2)

Sensitivity 3 -- Cost to Economy at $1.25/kwh
Economic Analysis -- Constant $1996

2010	2011	2012	2013	2014	2015	2016	2017	2018	2019	2020	
											DO NOTHING SCENARIO
0	0	0	0	0	0	0	0	0	0	0	Number of blackouts per year
12	12	12	12	12	12	12	12	12	12	12	Average duration of blackout (hours)
1000	1000	1000	1000	1000	1000	1000	1000	1000	1000	1000	Average power unserved during blackout (Megawatts)
											EFFECTS OF PROPOSED PROGRAM
											COSTS
0	0	0	0	0	0	0	0	0	0	0	Capital (in $000) – System Operation & Control Center
0	0	0	0	0	0	0	0	0	0	0	Capital (in $000) – Communications System
90.3	90.3	90.3	90.3	90.3	90.3	90.3	90.3	90.3	90.3	90.3	O & M at 1% of capital (in $000)
90.3	90.3	90.3	90.3	90.3	90.3	90.3	90.3	90.3	90.3	90.3	**Total Costs (in $000)**
											BENEFITS
											Increased Economic Activity -- (Avoidance of Blackout Effects)
0	0	0	0	0	0	0	0	0	0	0	Avoided blackouts per year
12	12	12	12	12	12	12	12	12	12	12	Average duration of blackout avoided (hours)
1000	1000	1000	1000	1000	1000	1000	1000	1000	1000	1000	Average power unserved during blackout (Megawatts)
0	0	0	0	0	0	0	0	0	0	0	Cost to economy of blackout at $1.25/kwh (in $000)
											Increased SAKENERGO Revenue -- (Avoidance of Blackout Effects)
0	0	0	0	0	0	0	0	0	0	0	Avoided blackouts per year
12	12	12	12	12	12	12	12	12	12	12	Average duration of blackout avoided (hours)
1000	1000	1000	1000	1000	1000	1000	1000	1000	1000	1000	Average power unserved during blackout (Megawatts)
0	0	0	0	0	0	0	0	0	0	0	SAKENERGO increased revenue at $.020/kwh (in $000)
											Increased Economic Activity and Increased SAKENERGO Revenue -- (Reduced Outage Restoration Time)
0	0	0	0	0	0	0	0	0	0	0	Number of blackouts per year
2	2	2	2	2	2	2	2	2	2	2	Average duration of blackout (hours)
10	10	10	10	10	10	10	10	10	10	10	Reduced restoration time (hours)
1000	1000	1000	1000	1000	1000	1000	1000	1000	1000	1000	Average power unserved during blackout (Megawatts)
0	0	0	0	0	0	0	0	0	0	0	Reduced cost to economy at $1.25/kwh (in $000)
0	0	0	0	0	0	0	0	0	0	0	SAKENERGO increased revenue at $.020/kwh (in $000)
0	0	0	0	0	0	0	0	0	0	0	Total benefit of reduced restoration time (in $000)
											Avoided Cost of Maintaining Existing PLC System
50	50	50	50	50	50	50	50	50	50	50	O & M cost (in $000)
50	50	50	50	50	50	50	50	50	50	50	**Total Benefits (in $000)**
-40.3	-40.3	-40.3	-40.3	-40.3	-40.3	-40.3	-40.3	-40.3	-40.3	-40.3	**Total Benefits - Costs (in $000)**

BEST AVAILABLE COPY

AEP Energy Services, Inc.
June 4, 1996
h:\tra\georgia\georgia4.wk4

70

5.0 Lajanuri Hydro Plant High Voltage Substation Rehabilitation Project

This section outlines the scope and cost of improvements to maintain the high voltage switchyard at the Lajanuri hydroelectric plant. The scope of work required was determined through on-site inspection of the condition of the existing electrical equipment and by discussions with SAKENERGO plant and substation maintenance personnel.

5.1 Description of Lajanuri Hydro Plant and High Voltage Substation

The Lajanuri plant is in western Georgia, north of Kutaisi, on the Lajanuri River. Lajanuri has three generating units, each with a capacity of 37 MW, the first of which was placed in service in 1960. There are two 80 MVA, 220/10.5 kV and two 10 MVA, 110/35/10.5 kV transformers at the substation to connect the generating units to the power system. The plant is integrated into the network through a radial 220 kV line to Tskaltubo, two 110 kV circuits, and two 35 kV circuits. There are also 10 kV lines emanating from the plant to supply power to local villages. A one-line diagram of the Lajanuri substation is shown in Figure 5.1.

5.2 Scope of Rehabilitation of Lajanuri Hydro Plant Substation

At this time, the #2 step-up transformer is the sole gateway for power generated by units #1 and #3 to enter the transmission network. Malfunction of the cooling system has put this transformer on the course of self-destruction because excessively high operating temperatures will eventually lead to premature failure of its winding insulation. The replacement of failed or stolen cooling fans must be considered to avert a possible catastrophic failure. The proposed rehabilitation of the generation units and the expected increase of power production makes this issue of proper operating condition of the transformer ever more important.

The #3-1 step-up transformer has been out of service for some time. Its insulating oil was drained for use elsewhere. New oil as well as an oil purification system are needed. This transformer must be dried to remove moisture collected through years of sitting empty and improper storage. If properly prepared and placed back in service, this transformer would enhance the reliability of the station. By operating in parallel with the #1 transformer, it would make the role of the #1 transformer less critical. As noted earlier, the #1 transformer is now the only means to deliver the generated power to the transmission grid. Any outage or failure of the #1 transformer would mean loss of generation from this plant.

Like the #1 transformer, the T-1, 220 kV circuit breaker is another critical piece of equipment. Without the T-2 circuit breaker, which was damaged by an earthquake some time ago, an outage on T-1 breaker would put generating units 1 and 3 off-line. The condition of circuit breaker T-1 compromises the reliability of the station. The breaker is about 35 years old (not a very old age for a typical long-life circuit breaker). The lack of routine maintenance, however, has put the circuit breaker in a less than desirable operating condition. The individual, solenoid mechanism for each pole also contributes to the problem. This type of mechanism is no longer seen on modern breakers. The replacement of T-2 breaker will serve two purposes: salvaged parts can be used as spare parts for T-1 breaker, and the station will have improved protection from faults and other disturbances.

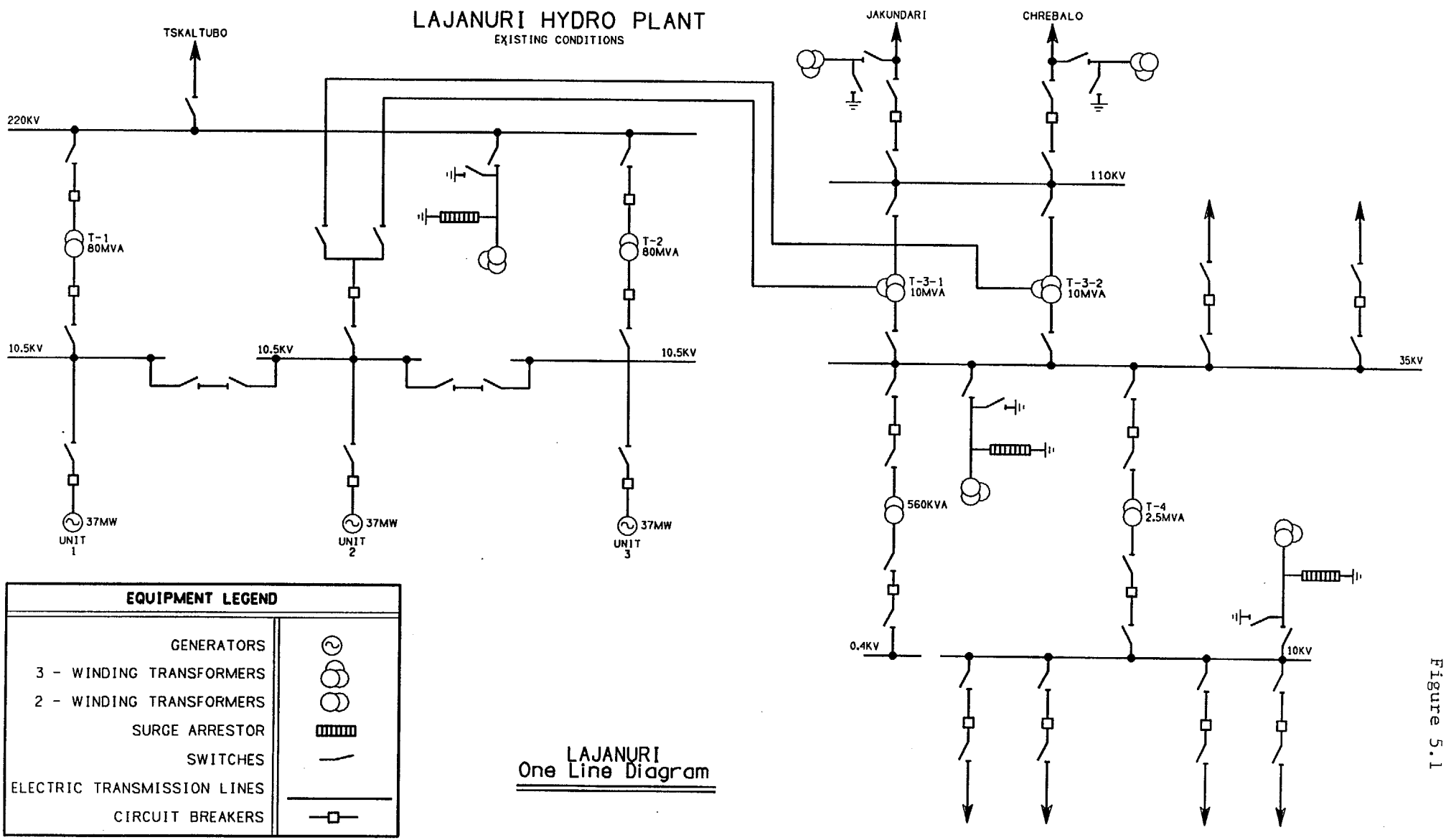

LAJANURI
One Line Diagram

Figure 5.1

- Replace one set of damaged bus potential transformers associated with the Jakundari 110 kV line

Foreign Materials	Domestic Labor
$19,200	$500

- Replace one 220 kV circuit breaker for T-2 transformer

Foreign Materials	Domestic Labor
$160,000	$2,200

- Repair 80 MVA, 220/10.5 kV transformer T-2 by replacing 24 fans (380 volt, 700 W, 1,400 RPM)

Foreign Materials	Domestic Labor
$10,500	$3,500

- Rebuild T-3-1 110/35/10.5 kV, 10 MVA transformer by drying and filling with oil

Foreign Materials	Domestic Labor
$2,600	$12,000

- Jumpers, connectors, cables, insulators, minor relay equipment, steel details, and foundation repair

Domestic Materials	Domestic Labor
$1,000	$3,500

- Field inspection, local transportation, and site mobilization charges (Estimate assumes all will be provided by the local contractors)

Domestic Labor

$6,600

- Spare parts equipment

Foreign Material

$25,000

- Site supervision and training

  Foreign Labor

  $135,000

- Engineering and Design

  Foreign Labor

  $80,000

The following table summarizes the cost estimate based on the foregoing division of supply of materials and labor between foreign and local sources.

Table 5.3.1
Lajanuri Plant High Voltage Substation Maintenance

Project Component	Foreign Material ($)	Domestic Material ($)	Foreign Labor ($)	Domestic Labor ($)	Total ($)
Equipment	363,300	1,000		25,200	389,500
Field Inspections				6,600	6,600
Spare Parts	25,000				25,000
Site Supervision and Training			135,000		135,000
Engineering and Design			80,000		80,000
Subtotal	388,300	1,000	215,000	31,800	636,100
Contingencies (15%)					95,415
Total Lajanuri Project					731,515

5.4 Equipment Procurement and Sourcing Plan

It is recommended that the major electrical equipment such as transformers, circuit breaker, potential transformer, etc. be purchased from qualified manufacturers through an international competitive bidding process. Engineering and design of the station improvements is recommended to be done by an experienced consultant engineer.

Other equipment such as 35/0.4 kV and 35/10.5 kV transformers must be replaced as well. These transformers provide necessary power for auxiliary equipment of the generating units. Investment in the rehabilitation of the generating units may not be fully realized if the transformers are not replaced.

In view of the above, the following improvements for rehabilitating the 220-110-35-10 kV substation are recommended based on visual inspections and discussions with plant personnel. These improvements include replacement of 35/10.5 kV transformers, rehabilitation of 110/35/10.5 kV, 10 MVA transformer, repair of 220/10.5 kV, 80 MVA transformer, replacement of the obsolete circuit breakers, and a potential transformer. (Refer to Figure 5.2 which is the simplified one-line diagram for the high voltage switchyard marked-up to illustrate the recommended equipment modifications.)

5.3 Cost of Lajanuri Plant Substation Improvements

This section represents the budgetary estimates for the improvements at the Lajanuri plant substation. The cost estimates assume the replacement equipment will utilize the existing protection and control equipment, steel structures, and foundations. It is further assumed that the existing ground grid in the substation is capable of handling the addition of new equipment.

Some minor relays, a small quantity of control cables, jumpers, connectors, steel details, and concrete are needed for these improvements. Costs for this equipment is shown as a single separate line item in the estimate. Further, it was assumed that the major equipment will be purchased from a supplier overseas and the other minor equipment such as jumpers, connectors, steel, and foundation will be supplied from local manufacturers. The local cost of materials are assumed to be 25% of the foreign material cost.

The costs for major equipment manufacturer's inspections during the construction period and for the training of SAKENERGO employees in the manufacturing plants for a limited time have also been included in the cost estimates.

The following presents the cost estimates, in 1996 U.S. dollars, for each equipment category.

Units 1,3 and Station Integration

- Replace one 35/10.5 kV, 2500 KVA transformer

Foreign Materials	Domestic Labor
$96,000	$2,500

- Replace one 35/0.4 kV, 560 KVA transformer

Foreign Materials	Domestic Labor
$75,000	$1,000

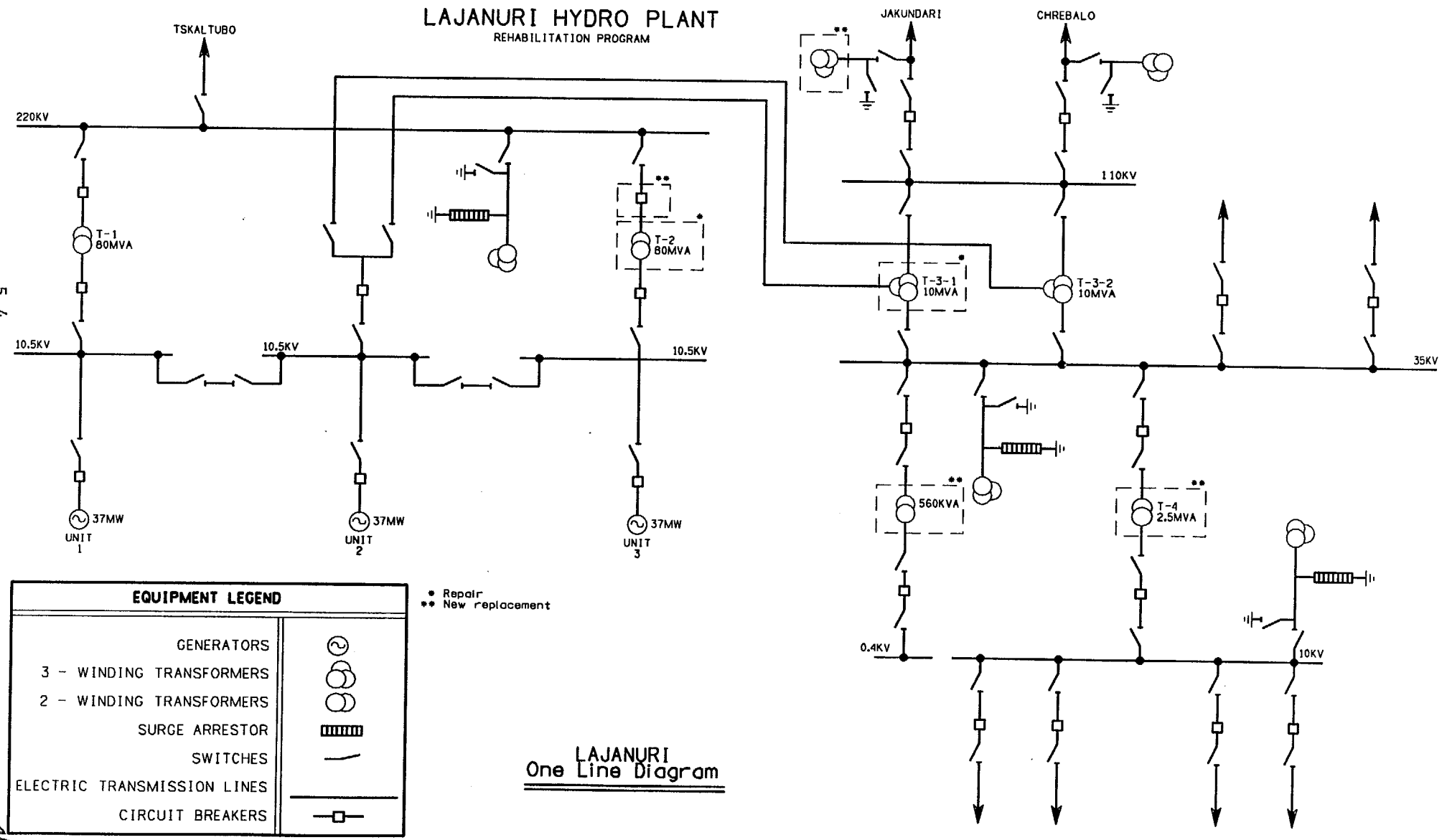
LAJANURI HYDRO PLANT
REHABILITATION PROGRAM
TSKALTUBO
JAKUNDARI
CHREBALO
220KV
110KV
35KV
10.5KV
10.5KV
10.5KV
0.4KV
10KV
T-1
80MVA
T-2
80MVA
T-3-1
10MVA
T-3-2
10MVA
560KVA
T-4
2.5MVA
37MW
UNIT
1
37MW
UNIT
2
37MW
UNIT
3
EQUIPMENT LEGEND
GENERATORS
3 - WINDING TRANSFORMERS
2 - WINDING TRANSFORMERS
SURGE ARRESTOR
SWITCHES
ELECTRIC TRANSMISSION LINES
CIRCUIT BREAKERS
* Repair
** New replacement
LAJANURI
One Line Diagram

Figure 5.2

The installation of equipment is recommended to be performed by the local contractor after appropriate training. Local labor cost is assumed to be approximately 20% of the foreign labor cost. It is recommended that the representatives of the manufacturers provide guidelines and instruction during the installation of the major electrical equipment.

Appendix E shows a preliminary equipment procurement package for the proposed substation rehabilitation program.

5.5 Project Implementation Schedule

The approximate time needed to implement the entire project is estimated to be the following.

• Project preparation, including Engineering, Design, and Preparation of specifications	4 Months
• Bidding, Evaluation, and Contract Award	3 Months
• Manufacture of equipment (including delivery to the site)	10 Months
• Installation of equipment	4 Months
• Total duration of the project	21 Months

The Figure 8.5.1 (page 8-7) shows the installation schedule for this project.

5.6 Benefits of Lajanuri High Voltage Substation Rehabilitation Project

The proposed improvements at the Lajanuri hydroelectric plant high voltage substation, which consists principally of maintenance items, will improve the reliability of the transmission system to coordinate with the planned rehabilitation of this plant. The proposed substation improvements will return the high voltage transmission equipment to good working order so the expected 111 MW (3-37 MW unit) plant can be used to the maximum extent possible. The repair of the step-up transformers T-2 and T-3 will prolong the life of the transformers. The economic analysis quantifying the benefits for this substation rehabilitation program is included in the companion report entitled, "Republic of Georgia Hydropower Rehabilitation Study", prepared by the Harza Engineering Company.

5.7 Quantitative Indicators

The generation output and availability of the three Lajanuri hydro units should be monitored and measured before and after the implementation of this project to evaluate and quantify the benefits associated with this rehabilitation program.

6.0 Khrami II Hydro Plant High Voltage Substation Rehabilitation Project

This section outlines the scope and cost of improvements to rehabilitate the high voltage switchyard at the Khrami II hydroelectric plant. The scope of work required was determined through on-site inspection of the condition of the existing electrical equipment and by discussions with SAKENERGO plant and substation maintenance personnel.

6.1 Description of Khrami II Hydro Plant and High Voltage Substation

The Khrami II plant is in eastern Georgia on the Khrami River, approximately 115 kilometers west of Tbilisi. There are two 55 MW generating units at the plant, which were placed in service in 1962. The generating units are connected to the power grid by two 220/110/10.5 kV transformers. One transformer consists of three single-phase autotransformers, with a total capacity of 60 MVA. The second transformer consists of three single-phase autotransformers with a total capacity of 90 MVA, however, the 10.5 kV winding to which the units are connected is only rated at 40 MVA.

The substation has one 220 kV circuit to Navtlugi and three 110 kV circuits to Dmanisi, Tandziia, and Gomareti. There is also a 10 kV line used to provide power to nearby villages. A one-line diagram of the Khrami II substation is shown in Figure 6.1.

6.2 Scope of Rehabilitation of Khrami II Substation

At present, there are two step-up transformers with a range of 40 MVA and 60 MVA at the plant to carry the load from the two generating units that have a capacity of 68.75 MVA each. It is clear the #1, 40 MVA transformer bank has been overloaded for many years or the power generation is reduced to prevent overloading the transformer. It is very unlikely that the latter is true, especially in the present situation when generation cannot meet the demand. Therefore, it is safe to assume that the #1 transformer is near the end of its life. The selection of 60 MVA bank for #2 transformer is acceptable if the cooling system functions properly. Unfortunately, 72 fans are missing from this transformer which necessarily requires a reduction in its thermal capability. Indeed, this may have contributed to the low insulation now in the transformer.

Other equipment in the station, such as disconnect switches and surge arresters, should be replaced as well to assure the benefits derived from the replacement of the transformers will be fully realized.

The following improvements for rehabilitating the 220-110-10.5 kV station are recommended based on visual inspections and discussions with plant personnel. The improvements include the replacement of six 220/110/10.5 kV, single phase generator step-up auto-transformers, replacement of disconnect switches, surge arresters, current transformers, batteries, and AC chargers. (Refer to Figure 6.2 which is the simplified one-line diagram for the Khrami II high voltage substation marked-up to illustrate the proposed improvements.)

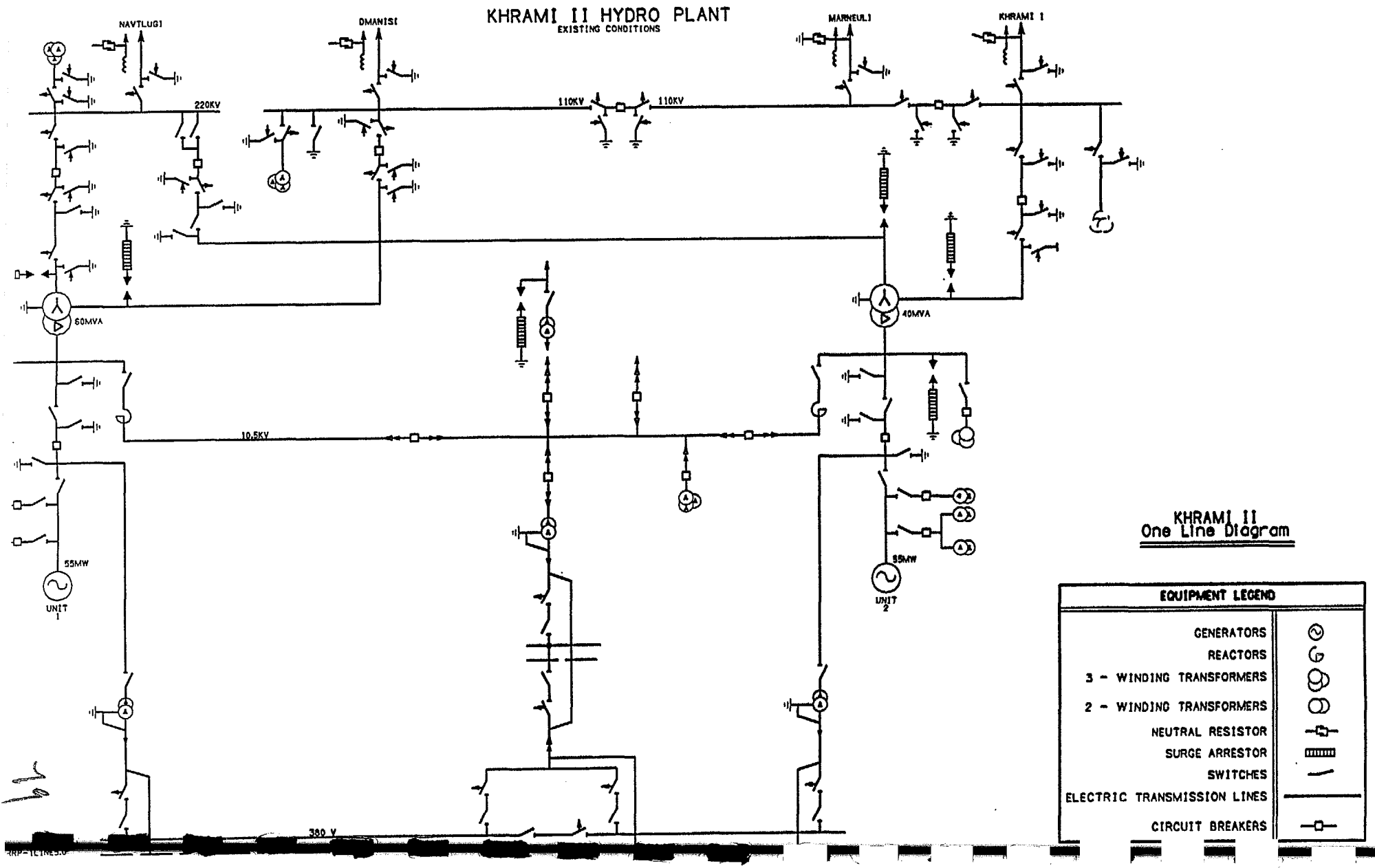
KHRAMI II HYDRO PLANT
EXISTING CONDITIONS
NAVTLUGI
DMANISI
MARNEULI
KHRAMI 1
220KV
110KV
110KV
60MVA
40MVA
10.5KV
55MW
UNIT 1
55MW
UNIT 2
380 V
KHRAMI II
One Line Diagram
EQUIPMENT LEGEND
GENERATORS
REACTORS
3 - WINDING TRANSFORMERS
2 - WINDING TRANSFORMERS
NEUTRAL RESISTOR
SURGE ARRESTOR
SWITCHES
ELECTRIC TRANSMISSION LINES
CIRCUIT BREAKERS

Figure 6.1

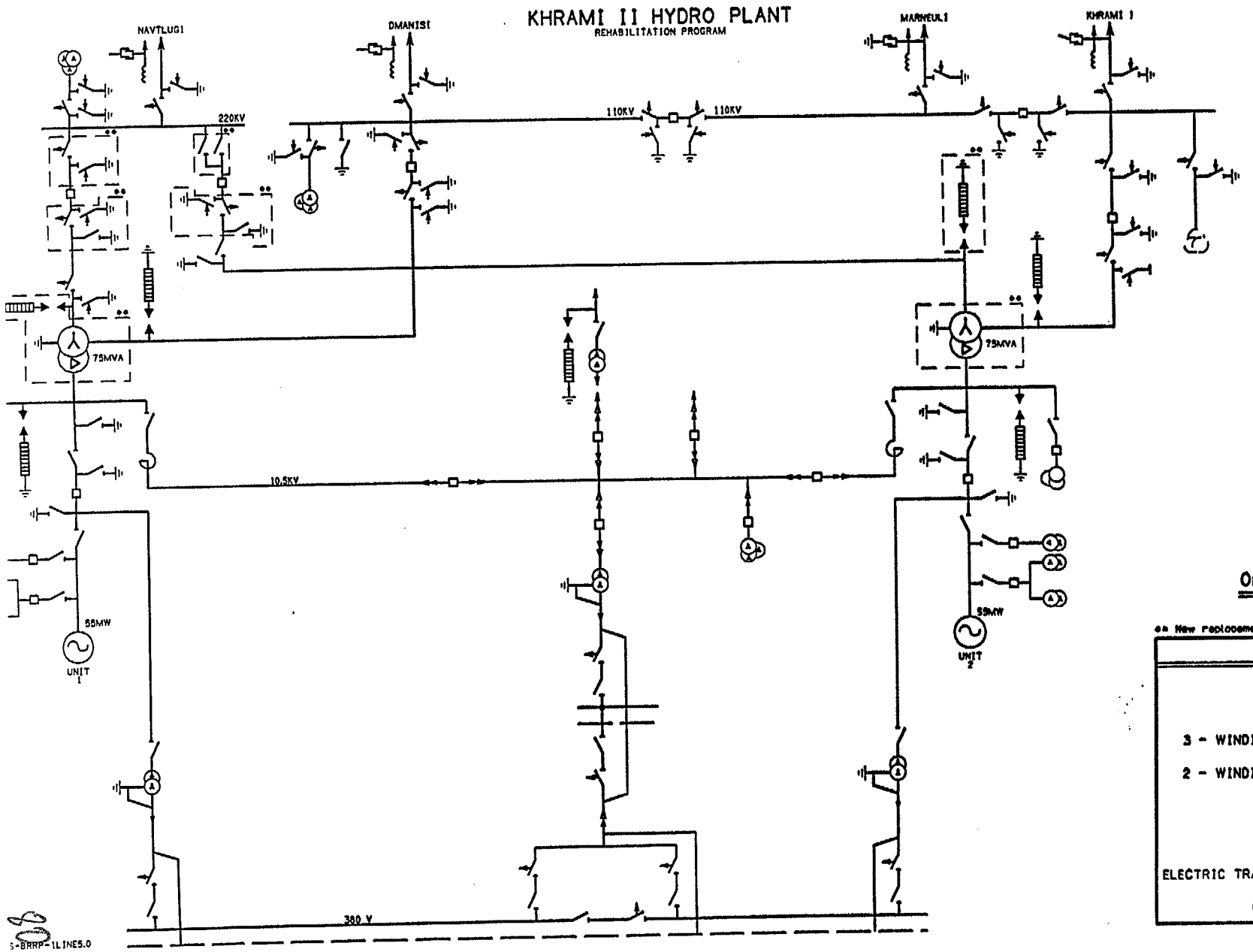

KHRAMI II
One Line Diagram

** New replacement

EQUIPMENT LEGEND	
GENERATORS	
REACTORS	
3 - WINDING TRANSFORMERS	
2 - WINDING TRANSFORMERS	
NEUTRAL RESISTOR	
SURGE ARRESTOR	
SWITCHES	
ELECTRIC TRANSMISSION LINES	
CIRCUIT BREAKERS	

Figure 6.2

6.3 Cost of Khrami II Substation Improvements

This section presents the budgetary cost estimates for the proposed improvements at the Khrami II plant substation. It is assumed that the replacement equipment will utilize the existing protection and control equipment, steel structures, and foundations. It is also assumed that the existing ground grid in the substation is capable of handling the addition of new equipment.

Some minor relays, a small quantity of control cables, jumpers, connectors, steel details, and concrete are needed for these improvements. Costs for this equipment is shown as a single separate line item in the estimate. Further, it was assumed that major equipment will be purchased from a foreign supplier and the other minor equipment such as jumpers, connectors, steel, and foundations will be supplied locally. The cost of locally supplied materials are estimated to be 25% of foreign material costs.

The estimate includes cost components for major equipment manufacturer's inspections during the construction period and for training of SAKENERGO personnel in foreign manufacturing plants for a limited time to acquaint them with foreign supplied equipment.

The following presents the cost estimates, in 1996 U.S. dollars, for each equipment category.

- Replace four sets of 220 kV disconnect switches

Foreign Materials	Domestic Labor
$44,500	$2,800

- Replace two sets of 220 kV surge arresters

Foreign Materials	Domestic Labor
$3,200	$100

- Replace six 220/110/10.5 kV, single-phase generator step-up auto-transformers with six 220/110/10.5 kV single-phase generator step-up auto-transformers, configured to comprise a 75 MVA three-phase transformer bank

Foreign Materials	Domestic Labor
$2,700,000	$36,000

- Jumpers, connectors, cables, insulators, minor relay equipment, steel details, and foundation repair.

Domestic Materials	Domestic Labor
$1,000	$3,000

- Field inspection, local transportation, and site mobilization charges assumed to all be provided by the local contractors

Domestic Labor

$6,600

- Spare parts equipment

Foreign Material

$150,000

- Site supervision and training

Foreign Labor

$135,000

- Engineering and Design

Foreign Labor

$300,000

The following table summarizes the cost estimate based on the foregoing division of supply of materials and labor between foreign and local sources.

Table 6.3.1
Khrami II Plant High Voltage Substation Rehabilitation

Project Component	Foreign Material ($)	Domestic Material ($)	Foreign Labor ($)	Domestic Labor ($)	Total ($)
Equipment	2,747,700	1,000		41,900	2,790,600
Field Inspections				6,600	6,600
Spare Parts	150,000				150,000
Site Supervision and Training			135,000		135,000
Engineering and Design			300,000		300,000
Subtotal	2,897,700	1,000	435,000	48,500	3,382,200
Contingencies (10%)					338,220
Total Khrami II Project					3,720,420

87

Note: The transformer first cost and project cost could be reduced by approximately 15% to 25%, if three-phase transformers can be delivered to the remote plant site. The reduced cost of the transformers, however, must be weighed against the reliability benefits provided with single-phase transformers and the future cost of providing spare transformer capacity. Other factors to be considered in specification of single- versus three-phase transformers include the additional station re-engineering to accommodate the three-phase transformer design. This issue should be reconsidered during the project specification stage.

6.4 Equipment Procurement and Sourcing Plan

It is recommended that major electrical equipment, such as transformers and disconnect switches, be purchased from qualified foreign manufacturers through an international competitive bidding process. The engineering and design of the station is recommended to be done by an experienced consultant engineer.

The installation of equipment is recommended to be performed by the local contractor after appropriate training. The local labor cost is assumed to be approximately 20% of foreign labor cost. It is recommended that the representatives of the manufacturers provide guidelines and supervision during the installation of the major electrical equipment.

Appendix E shows a preliminary equipment procurement package for the proposed station rehabilitation program.

6.5 Project Implementation Schedule

The following is an estimate of the total time required to implement the entire project.

• Project Preparation including Engineering, Design, and Preparation of specifications	4 Months
• Bidding, evaluation, and contract award	3 Months
• Manufacture of equipment (including delivery to the site)	15 Months
• Installation of equipment	4 Months
• Total duration of the project	26 Months

The Figure 8.5.1 (page 8-7) shows the installation schedule for this project.

6.6 Benefits of Khrami II High Voltage Substation Rehabilitation Project

The rehabilitation of the Khrami II high voltage substation is planned to coincide with recommended improvements to the generating units. Project implementation will improve the reliability and availability of this 110 MW (2-55 MW units) plant. Obsolete and failed equipment will be replaced. Transformers weakened by inadequate maintenance will be replaced so as to provide for operation at expected higher plant output levels following proposed repairs to the two generating units. The economic analysis quantifying the benefits for this substation rehabilitation program is included in the companion report entitled, "Republic of Georgia Hydropower Rehabilitation Study", prepared by the Harza Engineering Company.

6.7 Quantitative Indicators

In order to quantify the benefits associated with the Khrami II high voltage substation rehabilitation project, the generation output and availability of the Khrami II units should be measured and monitored. Also, the number of unit outages due to the substation problems should also be monitored and recorded before and after the implementation of this project.

7.0 Tkibuli Hydro Plant High Voltage Substation Rehabilitation Project

This section outlines the scope and cost of improvements to maintain the high voltage switchyard at the Tkibuli hydroelectric plant. The scope of work required was determined through on-site inspection of the condition of the existing electrical equipment and by discussions with SAKENERGO plant and substation maintenance personnel.

7.1 Description of Tkibuli Hydro Plant and High Voltage Substation

The Tkibuli hydro plant is on the Tkibuli River, northeast of Kutaisi, in western Georgia. The hydro plant has four generating units, each rated at 20 MW, which have been in operation since 1956. There are two 60 MVA, 110/10.5 kV transformers at the substation to connect the generating units to the power system. There is also an 80 MVA, 110/10.5 kV spare transformer at the substation. There are four 110 kV transmission lines terminated at the substation. These transmission lines are connected to the Zestafoni I and II, Shaori and Chiatura-3 substations. Power supply to local villages is also provided by 10 kV lines from the substation. A one-line diagram of the Tkibuli substation is shown in Figure 7.1.

7.2 Scope of Rehabilitation of Tkibuli Plant Substation

The two step-up transformers at Tkibuli are at the end of their useful life because of age and inadequate maintenance. There is no other alternative but to replace them. SAKENERGO already has one replacement transformer on site. It is unwise to place a new transformer next to one that may fail catastrophically at anytime. Furthermore, the environmental penalty will be extremely high if any of the transformers at the plants were to explode. These transformers are very near large bodies of water. An oil spill can reach the water in no time.

An improvement plan to rehabilitate the 110/10.5 kV substation is recommended based on visual inspections of major electrical equipment and discussions with Tkibuli plant and SAKENERGO maintenance personnel. The improvements include preparation and installation of the existing 110/10.5 kV, 80 MVA generator step-up transformer which is currently on-site, installation of a second 110/10.5 kV, 80 MVA generator step-up transformer to replace the deteriorated forty year old transformer, replacement of one of the 10.5/0.4 kV, 560 kVA transformers, replacement of one 110 kV circuit breaker and one potential transformer and, replacement and repair of group operated switches in the yard. (Refer to Figure 7.2 which is the simplified one-line diagram for the Tkibuli plant high voltage switchyard marked-up to illustrate the proposed improvements.)

7.3 Cost of Tkibuli Plant Substation Improvements

This section represents the budgetary cost estimates for improving the Tkibuli plant substation. The cost estimate assumes the replacement equipment will utilize the existing protection and control equipment, steel structures, and foundations. It is also assumed that the existing ground grid in the substation is capable of handling the addition of the proposed new equipment.

TKIBULI HYDRO PLANT
EXISTING CONDITIONS

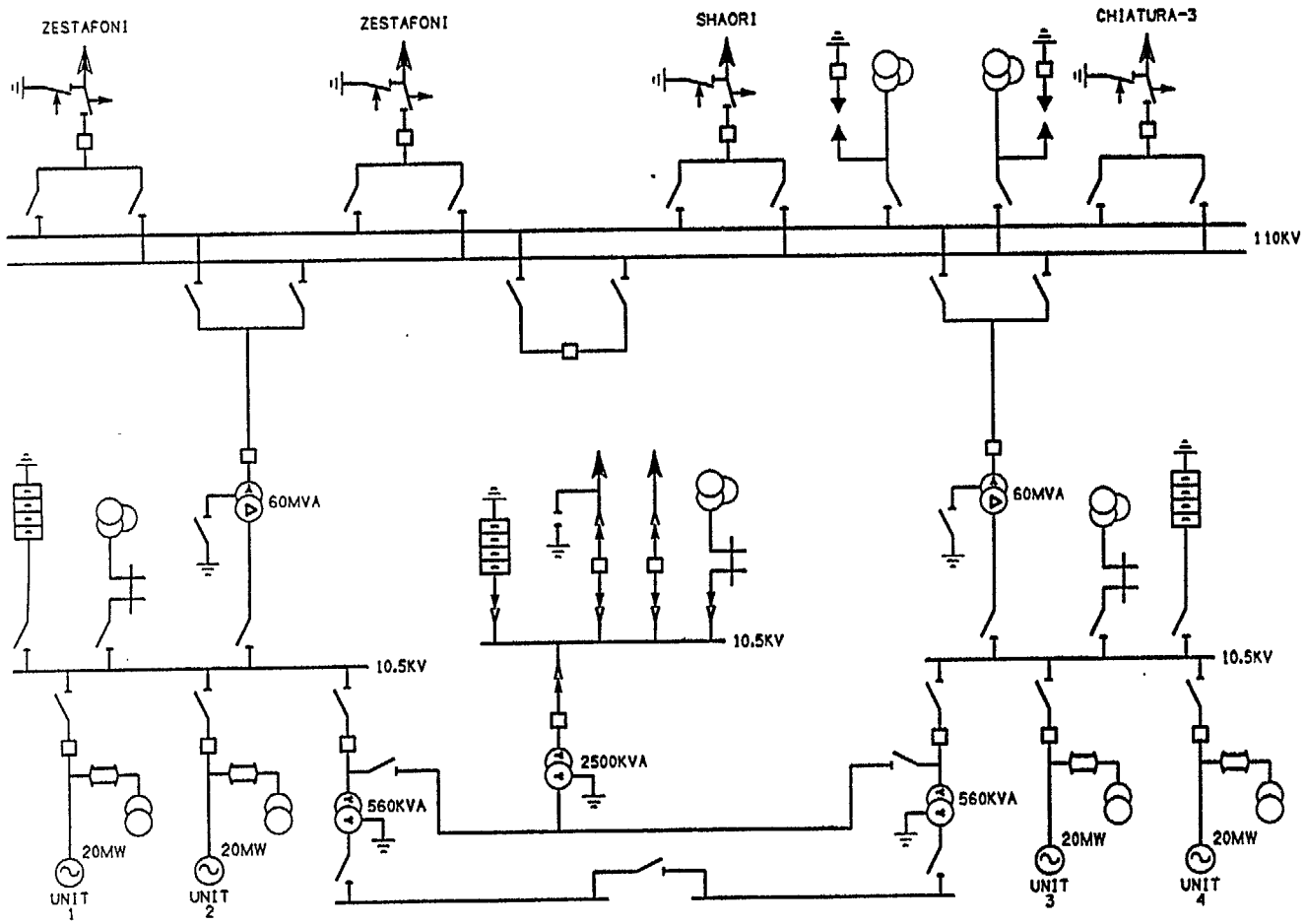

TKIBULI
One Line Diagram

LEGEND	
EQUIPMENT	
GENERATORS	
REACTORS	
3 - WINDING TRANSFORMERS	
2 - WINDING TRANSFORMERS	
SWITCHES	
ELECTRIC TRANSMISSION LINES	
CIRCUIT BREAKERS	

Figure 7.1

TKIBULI HYDRO PLANT
REHABILITATION PROGRAM

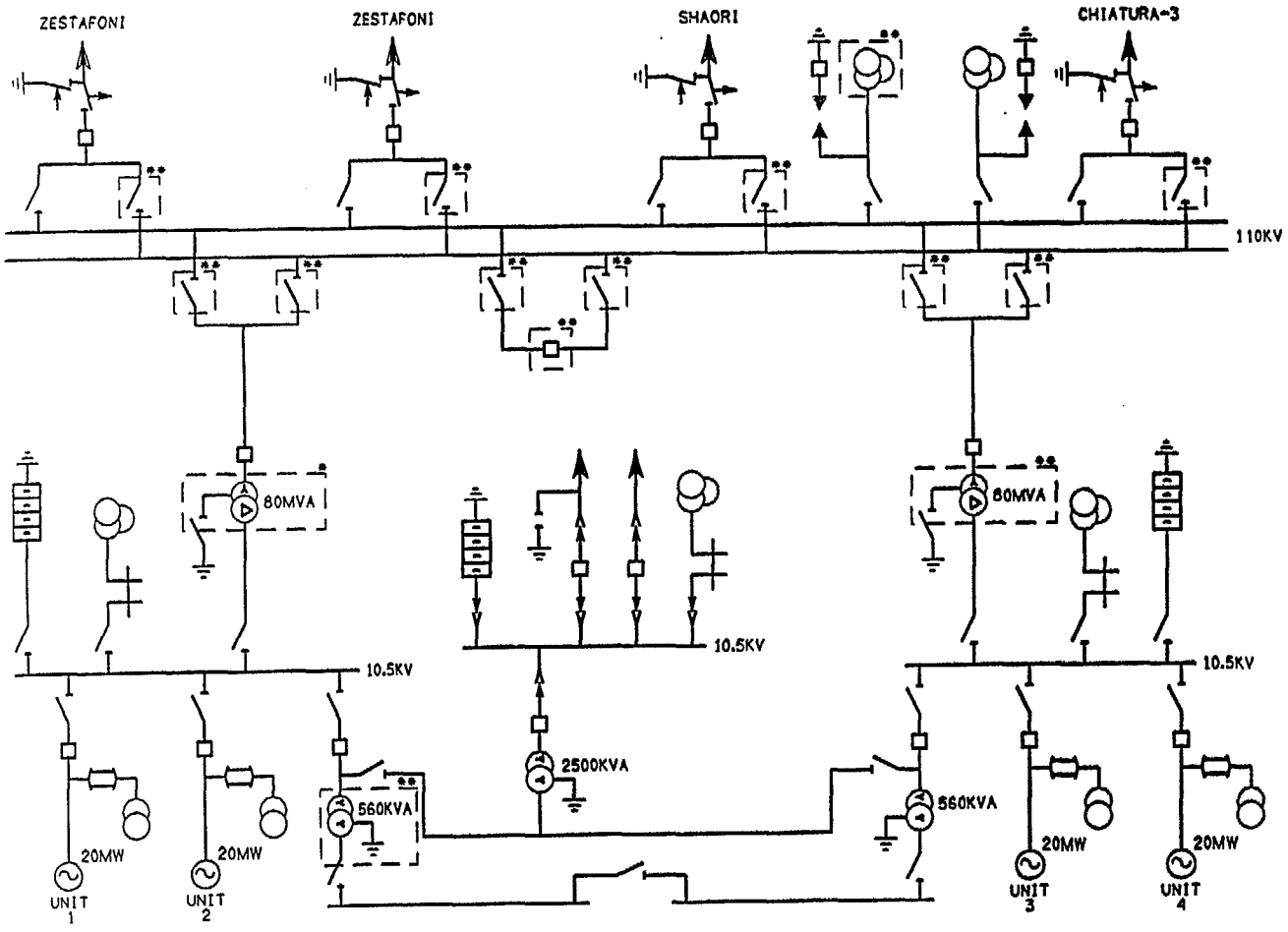

TKIBULI
One Line Diagram

*Prepare and Install
**New replacement

LEGEND	
EQUIPMENT	
GENERATORS	
REACTORS	
3 - WINDING TRANSFORMERS	
2 - WINDING TRANSFORMERS	
SWITCHES	
ELECTRIC TRANSMISSION LINES	
CIRCUIT BREAKERS	

Figure 7.2

AEPES-BRRP-1LINE4.0

Some minor relays, a small quantity of control cables, jumpers, connectors, steel details, and concrete are needed for these improvements. Costs for this equipment is shown as a single separate line item in the estimate. Further, it was assumed that the major equipment will be purchased from a foreign supplier with other minor equipment, such as jumpers, connectors, steel, and foundation materials, purchased from local vendors. The local cost of materials is assumed to be 25% of foreign material cost.

The costs associated with major equipment manufacturer's inspections during the construction period and the training of SAKENERGO personnel at their manufacturing plants for a limited time have also been included in the cost estimates.

The following presents the cost estimates, in 1996 U.S. dollars, for each equipment category.

- Prepare and install 110/10.5 kV, 80 MVA generator step-up transformer located on-site (Purchased in 1989 and stored without oil)

Foreign Materials	Domestic Labor
$6,600	$4,000

- Purchase and install a second 110/10.5 kV, 80 MVA generator step-up transformer to replace the deteriorated forty year old transformer

Foreign Materials	Domestic Labor
$500,000	$9,000

- Replace one 10.5/0.4 kV, 560 KVA transformer

Foreign Materials	Domestic Labor
$62,400	$800

- Replace one 110 kV circuit breaker

Foreign Materials	Domestic Labor
$80,000	$7,500

- Replace one 110 kV potential transformer

Foreign Materials	Domestic Labor
$6,400	$100

- Replace ten sets of group operated air break switches for the 110 kV bus

Foreign Materials	Domestic Labor
$65,000	$4,000

- Jumpers, connectors, cables, insulators, minor relay equipment, steel details, and foundation repair

Domestic Materials	Domestic Labor
$9,400	$1,300

- Field inspection, local transportation, and site mobilization charges which are all assumed to be provided by the local contractors

Domestic Labor

$6,500

- Spare parts equipment

Foreign Materials

$25,000

- Site supervision and training

Foreign Labor

$135,000

- Engineering and Design

Foreign Labor

$120,000

The following table summarizes the cost estimate based on the foregoing division of supply of materials and labor between foreign and local sources.

Table 7.3.1
Tkibuli Plant High Voltage Substation Rehabilitation

Project Component	Foreign Material ($)	Domestic Material ($)	Foreign Labor ($)	Domestic Labor ($)	Total ($)
Equipment	720,400	9,400		26,700	756,500
Field Inspections				6,500	6,500
Spare Parts	25,000				25,000
Site Supervision and Training			135,000		135,000
Engineering and Design			120,000		120,000
Subtotal	745,400	9,400	255,000	33,200	1,043,000
Contingencies (15%)					156,450
Total Tkibuli Project					1,199,450

7.4 Equipment Procurement and Sourcing Plan

It is recommended that the major electrical equipment, such as generator step-up transformer, circuit breaker, potential transformer and disconnect switches be purchased from foreign manufacturers. This could be accomplished through an international competitive bidding process. The engineering and design of the station is recommended to be done by an experienced consultant engineer.

The installation of equipment is recommended to be performed by the local contractor after appropriate training. The local labor cost is assumed to be approximately 20% of the foreign labor cost. It is recommended that equipment manufacturers provide guidelines and supervision during the installation of the major electrical equipment.

Appendix E shows a preliminary equipment procurement package for the proposed substation rehabilitation program.

7.5 Project Implementation Schedule

The following provides and estimate of the time needed to implement the entire project.

- Project Preparation including Engineering, Design, and Preparation of specifications — 4 Months
- Bidding, evaluation, and contract award — 3 Months
- Manufacture of equipment — 12 Months
- Installation of equipment — 4 Months
- Total duration of the project — 23 Months

The Figure 8.5.1 (page 8-7) shows the installation schedule for this project.

7.6 Benefits of Tkibuli High Voltage Substation Rehabilitation Project

The proposed improvements at the Tkibuli hydroelectric plant high voltage substation will improve the reliability of the transmission system to coordinate with planned rehabilitation of this plant. The transmission improvements will put the station in working order so the expected 80 MW (4-20 MW) plant can be used to the maximum extent possible. These proposed improvements will assure that investment in the rehabilitation of the generating units will be fully realized. This is especially important given the generating capacity shortfall currently being experienced on the SAKENERGO power system. The economic analysis quantifying the benefits for this substation rehabilitation program is included in the companion report entitled, "Republic of Georgia Hydropower Rehabilitation Study", prepared by the Harza Engineering Company.

7.7 Quantitative Indicators

The generation output and availability of the Tkibuli plant should be monitored and recorded before and after the implementation of the Tkibuli high voltage substation rehabilitation project. The before- and after-rehabilitation measurements will provide information to evaluate and quantify the benefits of this project.

8.0 Vartsikhe Hydro Plant High Voltage Substation Rehabilitation Project

This section outlines the scope and cost of improvements to repair and expand the high voltage switchyard at the Vartsikhe hydroelectric plant. The scope of work required was determined through on-site inspection of the condition of the existing electrical equipment and by discussions with SAKENERGO plant and substation maintenance personnel.

8.1 Description of Vartsikhe Hydro Plant and High Voltage Substation

The Vartsikhe hydro plant is in western Georgia, south of Kutaisi, on the Rioni River. The Vartsikhe plant consists of four stations, each having two 23 MW generating units, for a total capacity of 184 MW. The first generating unit was commissioned at Vartsikhe I in 1976, followed by the commissioning of Vartsikhe II station in 1978, Vartsikhe III in 1980, and Vartsikhe IV in 1988. Each pair of generating units is connected to the 110 kV system through an 80 MVA, 110/10 kV transformer. There is a spare 110/10 kV transformer at the Vartsikhe III substation.

The Vartsikhe hydro plant stations are internally connected to each other at 110 and 10 kV. In addition, there are two 110 kV and one 35 kV transmission circuits from Vartsikhe I. Two 110 kV transmission circuits from Vartsikhe IV further integrate the hydro plant into the power grid. A one-line diagram of the Vartsikhe I - IV substations is shown in Figure 8.1.

8.2 Scope of Vartsikhe Substation Improvements

The scope of improvements at the Vartsikhe substation include installation of new 110 kV circuit breakers, protection equipment and replacement of failed 110 kV current transformers, potential transformers, and disconnect switches. (Refer to Figure 8.2 which is a simplified one-line diagram of the Vartsikhe plant high voltage substation marked-up to illustrate the proposed improvements.)

8.3 Cost of Vartsikhe Plant Substation Improvements

This section represents the budgetary cost estimates for the proposed Vartsikhe plant substation improvements. It is assumed that direct replacement of original equipment will utilize the existing protection and control equipment, steel structures, and foundations. The expansion of the substation to include 110 kV circuit breakers to provide more reliable integration of the plant stations to each other and to the surrounding 110 kV system will require major structural and related work at the substation. The Design Institute has prepared a design for this work which was never implemented because of a shortage of capital. The original design drawings and material lists were not made available so the cost estimates are preliminary, subject to review and revision, pending receipt of more information if the project is selected to move to the specification stage.

Relays, control cables, jumpers, connectors, steel details, and concrete are needed for these improvements. The cost for this equipment is shown as a line item in the estimate.

92

VARTSIKHE I - IV HYDRO PLANTS

EXISTING CONDITIONS

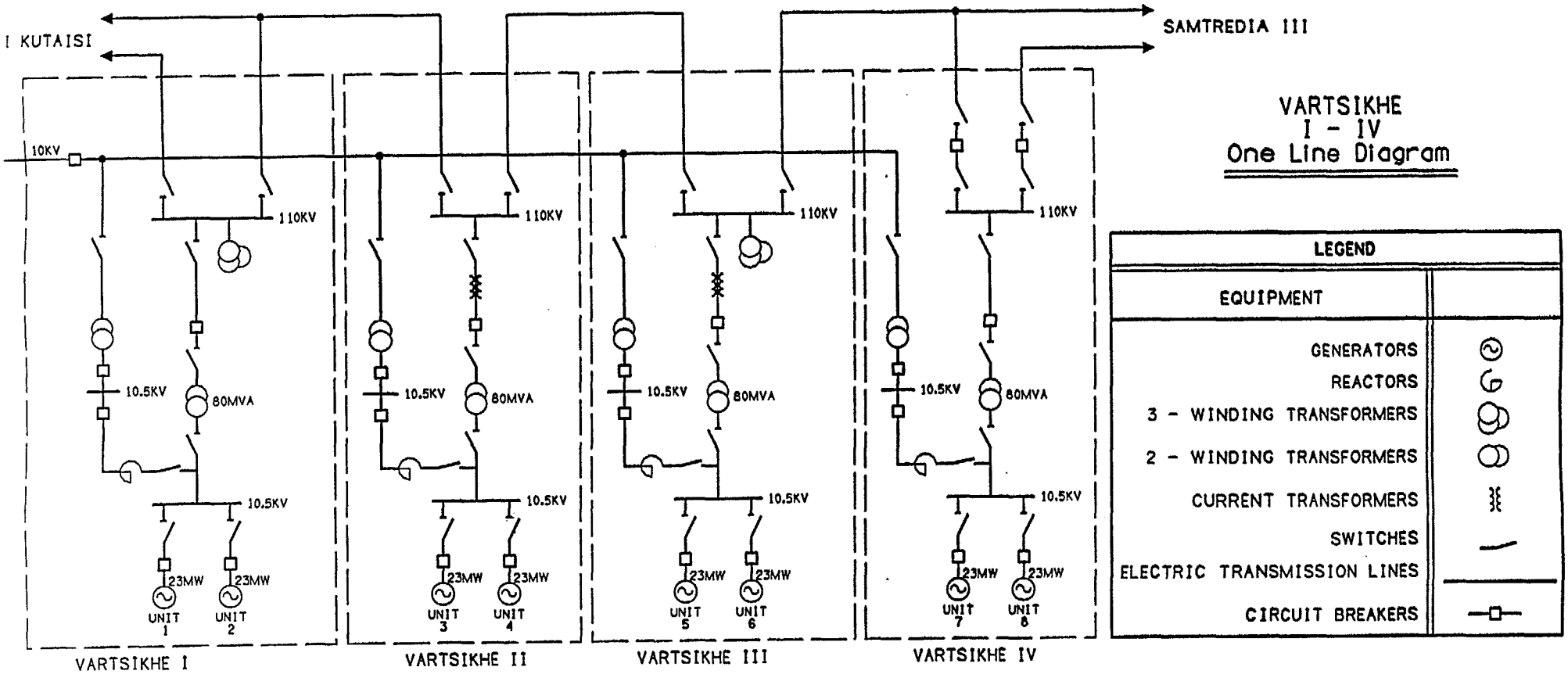

Figure 8.1

VARTSIKHE I - IV HYDRO PLANTS

REHABILITATION PROGRAM

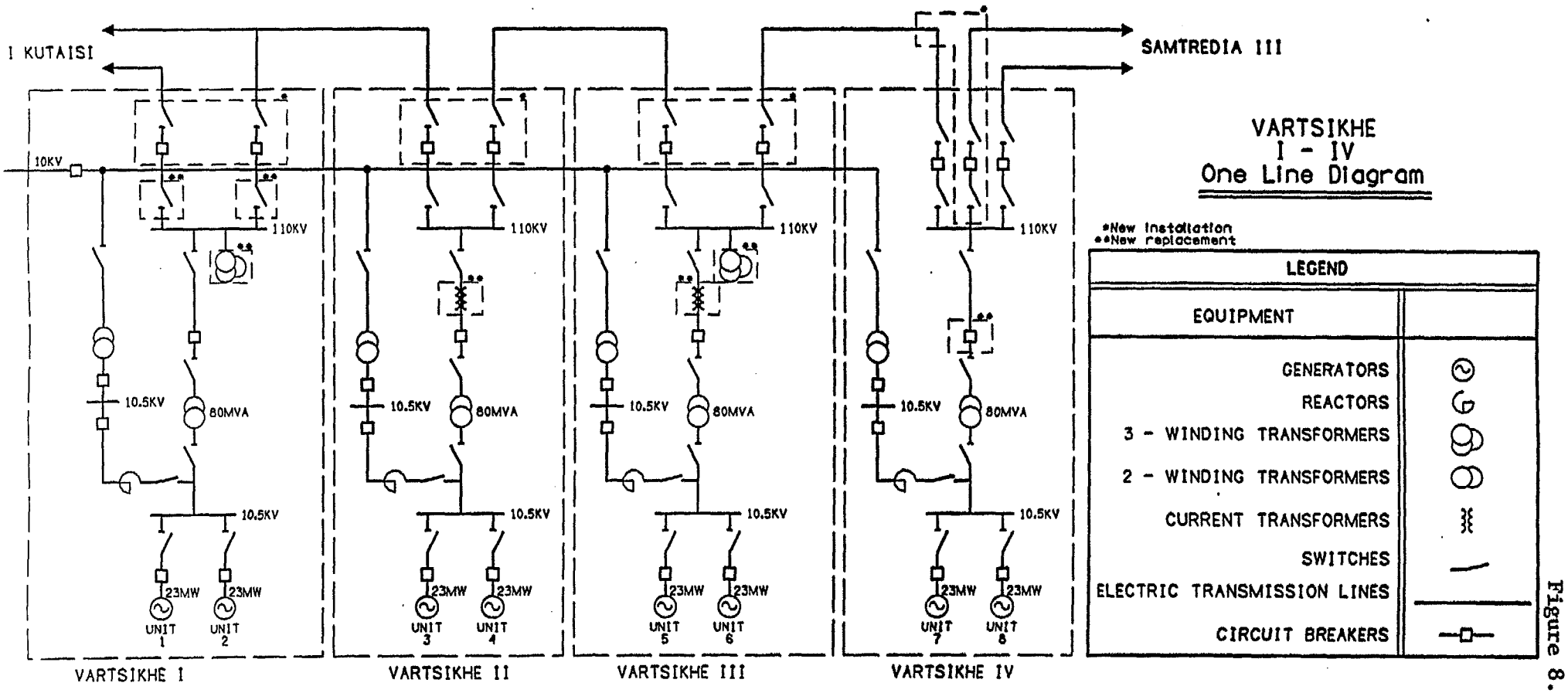

Figure 8.2

PES-BRRP-1Line6.0

The cost estimate assumes major electrical equipment, such as circuit breakers and disconnect switches, will be purchased from a foreign supplier. Other minor equipment, such as jumpers, connectors, steel, and foundation materials are assumed to be supplied from local sources. The cost of local materials are assumed to be 25% of foreign material costs. The costs for major equipment manufacturer's inspections during the construction period and the training of SAKENERGO personnel at the manufacturer's plants for a limited time have also been included in the cost estimates.

The following presents estimates, in 1996 U.S. dollars, for each equipment category.

- Replace two sets of 110 kV current transformers

Foreign Materials	Domestic Labor
$18,000	$1,200

- Install eight 110 kV circuit breakers with associated structural improvements

Foreign Materials	Domestic Materials	Domestic Labor
$480,000	$200,000	$120,000

- Replace two 110 kV potential transformers

Foreign Materials	Domestic Labor
$6,400	$100

- Replace two sets of group operated air break switches for the 110 kV bus

Foreign Materials	Domestic Labor
$13,000	$800

- Jumpers, connectors, cables, insulators, relay equipment, steel details, and foundation repair

Foreign Materials	Domestic Materials	Domestic Labor
$50,000	$1,500	$3,500

- Field inspection, local transportation, and site mobilization charges are all assumed to be provided by the local contractors

Domestic Labor
$13,200

- Spare parts equipment

  Foreign Material

  $75,000

- Site supervision and training

  Foreign Labor

  $67,500

- Engineering and design

Foreign Labor	Domestic Labor
$90,000	$18,000

The following table summarizes the cost estimate based on the foregoing division of supply of materials and labor between foreign and local sources.

Table 8.3.1
Vartsikhe Plant High Voltage Substation Rehabilitation

Project Component	Foreign Material ($)	Domestic Material ($)	Foreign Labor ($)	Domestic Labor ($)	Total ($)
Equipment	567,400	201,500		125,600	894,500
Field Inspections				13,200	13,200
Spare Parts	75,000				75,000
Site Supervision and Training			67,500		67,500
Engineering and Design			90,000	18,000	108,000
Subtotal	642,400	201,500	157,500	156,800	1,158,200
Contingencies (25%)					289,550
Total Vartsikhe Project					1,447,750

8.4 Equipment Procurement and Sourcing Plan

It is recommended that the major electrical equipment such as current transformers, circuit breakers, and potential transformers be purchased from foreign suppliers. This can be accomplished through an international competitive bid process following development of the

project specification documents. As previously noted, it is reported that a design for expanding the substation to include 110 kV switchgear is already developed by the Design Institute. A review of the design by a qualified and experienced consultant engineer is recommended before developing the detailed specification for the project.

The installation of equipment is recommended to be performed by the local contractor after appropriate training. The local labor cost is assumed to be approximately 20% of foreign labor costs. It is recommended that representatives of the major electrical equipment manufacturers provide guidelines and instruction during the installation of the major electrical equipment.

Appendix E shows a preliminary equipment procurement package for the proposed substation rehabilitation program.

8.5 Project Implementation Schedule

The time required to implement the entire project is estimated to be the following.

• Project Preparation including Engineering, Design, and Preparation of specifications	3 Months
• Bidding, evaluation, and contact award	3 Months
• Manufacture of equipment	6 Months
• Installation of equipment	4 Months
• Total duration of the project	16 Months

The Figure 8.5.1 (page 8-7) shows the installation schedule for this project.

8.6 Benefits of Vartsikhe Substation Rehabilitation Project

The proposed improvements at the Vartsikhe hydroelectric plant substation will improve the reliability of the transmission system to coordinate with planned rehabilitation of this plant. The proposed transmission improvements will improve the reliability of the plant by reducing the exposure of the plant to outages on the 110 kV transmission system. The plant is presently vulnerable to 110 kV line outages because no 110 kV switchgear is provided to isolate the units from disturbances on the 110 kV transmission system. The economic analysis quantifying the benefits for this substation rehabilitation program is included in the companion report entitled, "Republic of Georgia Hydropower Rehabilitation Study", prepared by the Harza Engineering Company.

8.7 Quantitative Indicators

The generation output and availability of the Vartiskhe units should be monitored and measured to evaluate and quantify the benefits of this project. The number of Vartiskhe plant outages, before and after the implementation of the project, should also be recorded and monitored to quantify the benefits provided by the project.

Figure 8.5.1

SUBSTATION INSTALLATION SCHEDULE

ID	Task Name	Duration
1	LAJANURI SUBSTATION	0w
2	Engineering & Design	12w
3	Technical Specification	4w
4	Contract Award	12w
5	Equipment Fabrication	32w
6	Delivery of Equipment	8w
7	Equipment Installation	16w
8		
9	KHRAMI II SUBSTATION	0w
10	Engineering & Design	8w
11	Technical Specification	4w
12	Contract Award	12w
13	Equipment Fabrication	48w
14	Delivery of Equipment	12w
15	Equipment Installation	12w
16		
17	TKIBULI SUBSTATION	0w
18	Engineering & Design	8w
19	Technical Specification	4w
20	Contract Award	12w
21	Equipment Fabrication	40w
22	Delivery of Equipment	8w
23	Equipment Installation	16w
24		
25	VARTISKE SUBSTATION	0w
26	Engineering & Design	8w
27	Technical Specification	4w
28	Contract Award	12w
29	Equipment Fabrication	20w
30	Delivery of Equipment	4w
31	Equipment Installation	16w

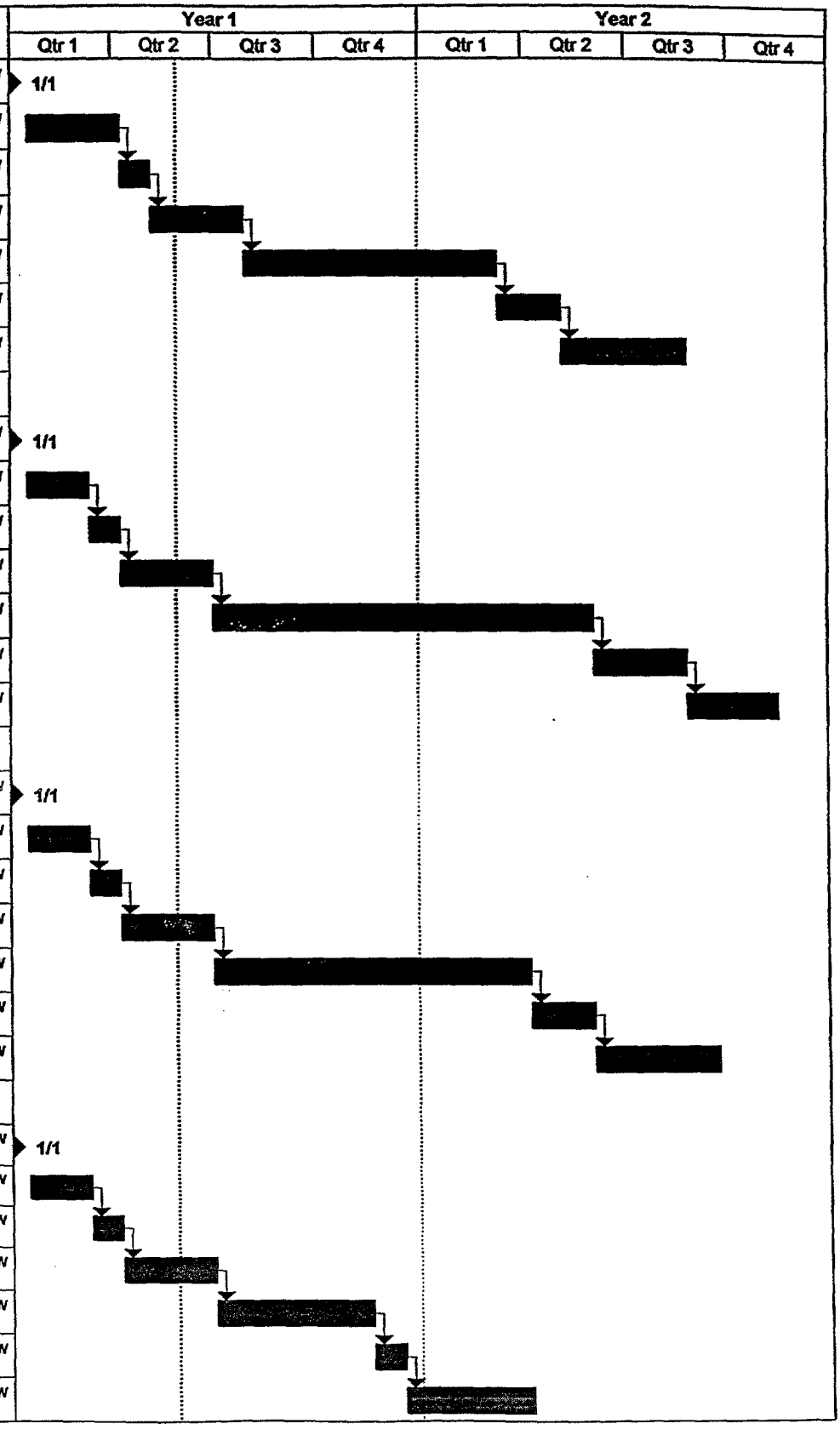

APPENDIX A

REPUBLIC OF GEORGIA STUDY - PROCUREMENT PACKAGE
CONTROL CENTER PROJECT

	Quantity	Estimated Cost in '96 US $
1. TBILISI CONTROL CENTER - PACKAGE		
A. Computers for the Control Center	1 set	415,000
New master computer system including:		
- Two workstation-based master computers		
- Two communication front-end processors		
- Two PC based operator consoles		
- Two programmer's PCs		
- One local remote terminal unit		
- One line printer, letter quality printer, and copier machine		
- Local Area Network for peripherals		
- UPS systems		
- Rehabilitation of remote processor terminals		
Training		60,000
Site preparation and installation		100,000
Spare parts and test equipment		54,000
B. Office LAN		260,000
- Installation of office LAN		
C. Engineering, Design and Project Management		220,000
Subtotal		1,109,000
2. RTUs (PHASES 1, 2 AND 3)		
RTUs hardware	35 sites	875,000
Field installation materials		1,050,000
Training		50,000
Spare parts and test equipment		300,000
Field supervision for phase 1 and 2		90,000
Subtotal		2,365,000

	Quantity	Estimated Cost in '96 US $
3. FAULT RECORDERS		
Fault recorders hardware and software with two PC based master systems	8 sets	160,000
Field Installations		31,000
Training		30,000
Spare parts		20,000
Subtotal		241,000
4. KUTAISI CONTROL CENTER PACKAGE (PHASE 2)		
A. New master computer system at KUTAISI including:		200,000
- Two workstation-based master computers		
- Two communication front-end processors		
- Two PC based operator consoles		
- One programmers PC		
- One local remote terminal unit		
- One line printer, letter quality printer, and copier machine		
- Local area network hardware		
- UPS		
Site preparation and installation		50,000
Spare parts and test equipment for control center		25,000
B. Engineering, Design and Project Management		40,000
Subtotal		315,000
5. SAKENERGO (DOMESTIC LABOR)		
A. Tbilisi Control Center Rehabilitation		
- Rehabilitation of RPTs		5,000
- Site preparation and installation		10,000
- Training		2,000
- Office LAN installation at Tbilisi		2,000
Subtotal		19,000
B. RTU Installation		
- Installation assistance		11,000
- Training assistance		1,000
Subtotal		12,000

	Quantity	Estimated Cost in '96 US $
C. Kutaisi Control Center Rehabilitation - Site preparation and installation assistance		4,000
D. Fault Recorder Installation Assistance		3,000
Subtotal Before Contingencies		4,068,000
6. CONTINGENCIES		610,200
Total		4,678,200

ATTACHMENT B
Power Line Carrier
Backbone Communications System

Station Name Start Point	Station Name End Point	Number Circuits used	Number Phases used	Voltage kv	Need Coupling Capacitor y,n	Need Line Tuner y,n	Circuit Name and Type	Need Line Trap and Quantity	Line Ampacity amps	Manufacture	Circuit Name or type of function or destination
Site A	Site B	8 2 1	Phase 1 Phase 2 Phase 3	220 KV	yes yes no	yes no no	8 voice 2 data 1 relay	yes no yes	1500	Yugoslavia	Voice Tblisi Telemechanics Relay to site B
Sokhumi 110 KV	Sokhumi 220 KV		Phase 1 Phase 2 Phase 3	110 KV	no	yes					--
Sokhumi	Tkvarcheli		Phase 1 Phase 2 Phase 3	220 KV	no	yes					Relay
Tkvarcheli	Vardnili		Phase 1 Phase 2 Phase 3	220 KV	no	yes					Relay
Vardnili	Inguri		Phase 1 Phase 2 Phase 3	220 KV	no	yes	3 voice 1 relay		2,000	Yugo. Russia	Relay
Vardnili	Zugdidi/220 Menji Kutaisi		Phase 1 Phase 2 Phase 3	220 KV	no	yes	3 voice 1 relay		1,000	Russia Russia	Relay
Zugdidi	Menji		Phase 1 Phase 2 Phase 3	220 KV	no	yes	3 voice 1 relay		1,000	Russia Russia	Relay
Menji	Kutaisi		Phase 1 Phase 2 Phase 3	220 KV	no	yes	12 voice 1 relay		1,000	Yugo. Russia	Relay

Appendix B

nguri	Zestaphoni		Phase 1 Phase 2 Phase 3	500 KV	no	yes	6 voice 1 relay		2,000	Yugo. Russia	Relay
Rioni	Kutaisi		Phase 1 Phase 2 Phase 3	110 KV							--
Kutaisi	Tskaltubo		Phase 1 Phase 2 Phase 3	220 KV	no	yes	3 voice -- --		1,000	Russia Russia	--
Tskaltubo	Ladjanuri		Phase 1 Phase 2 Phase 3	220 KV	no	yes	3 voice -- --		1,000	Russia Russia	--
Vartsikhe	Kutaisi		Phase 1 Phase 2 Phase 3	110 KV	no	yes	3 voice -- --		600	Russia Russia	--
Gumati	Rioni		Phase 1 Phase 2 Phase 3	110 KV	no	yes	3 voice -- --		600	Russia Russia	--
Rioni	Samtredia-1		Phase 1 Phase 2 Phase 3	110 KV	no	yes	3 voice -- --		600	Russia Russia	--
Samtredia-1	Samtredia-3		Phase 1 Phase 2 Phase 3	110 KV	no	yes	1 voice --		600	Russia Russia	--
Samtredia-1	Ozurgeti		Phase 1 Phase 2 Phase 3	110 KV	no	yes	3 voice -- --		600	Russia Russia	--
Ozurgeti	Batumi-1		Phase 1 Phase 2 Phase 3	110 KV	no	yes	1 voice --		600	Russia Russia	--
Zestafoni	Ksani		Phase 1 Phase 2 Phase 3	500 KV	no	yes	12 voice 1 relay 12 voice		2,000	Yugo. Russia Yugo.	Relay

Zestafoni	Khashuri		Phase 1 Phase 2 Phase 3	220 KV	no	yes	12 voice relay	12 voice	1,000	Yugo. Russia	Relay
Khashuri	Gldani Via Gozi Ksani		Phase 1 Phase 2 Phase 3	220 KV	no	yes	12 voice relay 3 voice		1,000	Yugo. Russia Russia	Relay
Gori	Gldani via Ksani		Phase 1 Phase 2 Phase 3	220 KV	no	yes	3 voice relay 12 voice		1,000	Russia Russia Yugo.	Relay
Ksani	Lisi		Phase 1 Phase 2 Phase 3	220 KV	no	yes	12 voice relay 12 voice		2,000	Yugo. Russia Yugo.	Relay
Lisi via	Jimvali Ksani		Phase 1 Phase 2 Phase 3	220 KV	no	yes	3 voice relay --		2,000	Yugo. Russia --	Relay
Ksani	Gldani		Phase 1 Phase 2 Phase 3	220 KV	no	yes	3 voice relay --		2,000	Yugo. Russia --	Relay
Lisi	Khrami-1		Phase 1 Phase 2 Phase 3	110 KV	no	yes	3 voice -- --		600	Russia -- --	--
Gldani	Rustavi		Phase 1 Phase 2 Phase 3	220 KV	no	yes	3 voice relay --		1,000	Russia -- --	Relay
Rustavi	Gurjaani		Phase 1 Phase 2 Phase 3	220 KV	no	yes	3 voice relay --		1,000	Russia -- --	Relay
Gurjaani	Telavi		Phase 1 Phase 2 Phase 3	110 KV	no	yes	3 voice -- --		600	Russia -- --	--
Khrami-2	Navtlugi		Phase 1 Phase 2 Phase 3	220 KV	no	yes	3 voice relay --		1,000	Russia -- --	Relay

Lisi	Marneuli		Phase 1 Phase 2 Phase 3	220 KV	no	yes	3 voice relay --		2,000	Russia -- --	Relay
Navtlugi	Gardabani		Phase 1 Phase 2 Phase 3	220 KV	no	yes	3 voice relay --		1,000	Russia --	Relay
Rustavi	Mt. Arkhi		Phase 1 Phase 2 Phase 3	110 KV	no	yes	3 voice -- --		600	Russia -- --	--
Mt. Arkhi	Rustavi Factory		Phase 1 Phase 2 Phase 3	110 KV	no	yes	1 voice --		600	Russia --	--
Vardinili	Batumi		Phase 1 Phase 2 Phase 3	220 KV	no no	yes yes	3 voice relay		1,000 1,000	Russia Russia	Relay
Menji	Batumi		Phase 1 Phase 2 Phase 3	220 KV	no no	yes yes	3 voice relay		1,000 1,000	Russia Russia	Relay
Menji	Tskaltubo		Phase 1 Phase 2 Phase 3	220 KV	no no		--- relay		2,000 2,000	-- Russia	Relay
Zestaphoni	Kutaisi		Phase 1 Phase 2 Phase 3	220 KV	no no	yes yes	3 voice relay		1,000 1,000	Russia Russia	Relay
Gldani	Navtlugi		Phase 1 Phase 2 Phase 3	220 KV	no no	 yes	--- relay		2,000 2,000	-- Russia	Relay
Gardabani	Ksani		Phase 1 Phase 2 Phase 3	500 KV	no no	 yes	--- relay		2,000 2,000	-- Russia	Relay
Gardabani	Marneuli		Phase 1 Phase 2 Phase 3	220 KV	no no	 yes	--- relay		1,000 1,000	-- Russia	Relay

Gardabani	Rustavi		Phase 1 Phase 2 Phase 3	220 KV	no no	 yes	--- relay		1,000 1,000	-- Russia	Relay
Gardabani	Navtlugi		Phase 1 Phase 2 Phase 3	220 KV	no no	yes yes	12 voice relay		1,000 1,000	Yugo. Russia	Relay
Bzibi	Sokhumi		Phase 1 Phase 2 Phase 3	220 KV	no no	yes yes	3 voice relay		1,000 1,000	Russia Russia	Relay

By request of the World Bank

August 14, 1995

The World Bank requested we analyze the cost to install a microwave radio communication backbone for Sakenergo. The following is an estimate which was provided to the World Bank in August of 1995, and subsequently reviewed and turned down. The costs have not been changed since the draft report.

Optional Communications

Optional communication links utilizing microwave communications from Inguri Hydro to Gardabani Thermal Plant are going to be discussed. This is a major back bone radio system for high speed data and voice communications. This estimate has multiple options since there are many variables. The possibilities are to build a private microwave (MW) system, build part of a private MW system and lease channels on the government system or build a private MW system utilizing tower space on the government MW system. A detailed site by site analysis must be completed prior to finalizing a detailed estimate but the following information will be provided to allow the World bank to decide if this is an option that should be developed in detail. In the US., companies lease tower and building space on a regular basis. Typical Western cost amount to $1.00 per foot for tower space and an additional flat fee if the building is utilized also. Sakenergo and the government must realize leasing space may improve reliability and reduce the total cost to an acceptable level.

A MW system is vulnerable to vandalism, theft, and power losses. Sakenergo has stated that there is a possibility that the dishes, generators, and equipment could be susceptible to vandalism and theft. If one site is taken out of service, the complete MW path is unavailable. This is an important point that must be discussed with Sakenergo. Fences may be required, and building design may be adjusted depending on the above circumstances. PLC also has some of the same concerns except the signals are carried on company owned high voltage cable and most thieves do not steal this cable when the line is energized.

Attachment #A illustrates the MW path and site detail. This could be modified based on the availability of Sakenergo sites, the use of Government facilities, and a detailed study of the system.

The assumptions used are as follows:

Topographic maps used are not detailed enough for an accurate microwave path study. U.S. maps are scaled at 1:24,000 for mw path studies versus the Georgian map scale of 1:500,000. Potential for error is higher since these maps are less detailed. The map utilized for this study was a copy of a map and originals must be utilized due to copy distortions for final path calculations. Substations and plants must be verified on original maps. AEP has ordered these original and updated maps from the Federal Government but it will take ten days to receive them.

Site exact locations have not been verified by Sakenergo due the time constraint, but must be verified on topographic maps to perform an accurate study. All substations, plants and other sites must have accurate longitude, latitude and elevation data for final design review.
The Thermal plant is assumed to be at an elevation of 1,500 feet with a stack height of 300 feet. If the stack is taller or shorter, it needs to be documented. To complete an accurate and final design, 1:24,000 scale maps are required or the system must be inspected by helicopter, surveyed, or GPS coordinates reviewed if possible.
Land is available for every site (no cost included in estimate)
220 volt AC is assumed to be available at every site
All sites include a cost for generator and batteries
All sites will be fenced
All sites that require new buildings will have them built locally
All sites will have a 200 foot tower for this estimate but are subject to change
All sites have road access
Space is available on the large commercial tower outside Tbilisi for all paths
Microwave sites will not be hot standby design, reducing reliability
No special shipping costs are included
Assuming MW frequencies in the 6 GHz spectrum
Licenses and frequency coordination charges not included
All equipment is based on US dollars and will meet North American Standards

Each site is assumed to have:

A new block building built by local labor	Cost $10,000
A new Tower approximately 200 feet tall	Cost $90,000
A fence and graveled communication site	Cost $ 5,000
A 45 MB microwave radio 6 GHz	Cost $90,000
A channel bank	Cost $ 4,000
A 12KW generator and transfer panel	Cost $ 8,000
Station batteries and charger	Cost $ 7,000
Air conditioner	Cost $ 1,000
Dehydrator, wave guide and dish	Cost $16,000
Training	Cost $ 3,000
Test Equipment	Cost $15,000
Misc wiring, etc..	Cost $ 1,000
System Engineering and Project Management	Cost $10,000
Alarm system	Cost $ 5,000
Installation labor (local)	Cost $ 4,000
Total price per site	Cost $269,000

Summary

12 sites x $269K=	Cost $3,228,000
4 stub sites x $239K=	Cost $956,000
System Engineering and project management	Cost $200,000
Shadowing for 4 engineers	Cost $30,000
Contingency of two sites	Cost $538,000

Spare parts	Cost $400,000
Total	Cost $5,210,000

Comments:

There are twelve (12) backbone sites and four (4) stub sites. There is a high probability that two more sites may required due to topographic data insufficiency and lack of site detailed locations.

There is a potential for cost savings:
The Power Line carrier upgrade can be reduced if a microwave backbone is installed. The total reduction cost should be about 50% of the total upgrade cost but until we receive a site by site breakdown of parts required, it must only be an estimate. The two independent small microwave systems are included in the above estimate, therefore this can be used as an offset also.

Total optional Microwave system cost	$5,210,000
Potential PLC savings	$ -750,000
Kutaisi MW system savings	$ -150,000
Tbilisi MW system savings	$ -510,000
PLC Spare parts not needed	$ -50,000
Total Incremental cost	$3,750,000

Benefit

By beginning to transition to a communications system that will be more reliable, have higher channel capacity and faster data speeds, Sakenergo can begin the long term process of upgrading their communications system to one that can be counted on for normal and emergency communications. The control center can operate with better knowledge of system conditions and voice communications can be clear and reliable. Using PLC for all voice and data communications is extremely limited, but using equipment that is twenty years old just begs for trouble. Spare parts will continually be a problem and maintenance on PLC equipment is very time consuming and parts for attachment to the high voltage system continue to rise. Availability of PLC replacement parts is continually decreasing since most companies have discontinued the use of such equipment years ago. The MW systems designed in the original proposal have limited capacity but improve system conditions exponentially. This incremental costs includes the MW systems proposed in the first portion of this report and now can be interconnected to the backbone. This provides for a back up control center where Kutaisi could now take over operations of the country in case of a disaster and computer information could be transferred at reasonable data speeds to keep each control center up to date. Over time, as Sakenergo improves financially, other sites can be installed to provide voice and data communications to all plants, substations and dispatching locations.

Pat Collins
American Electric Power
Columbus, Ohio 43215
614-223-3598

Attachment A
Microwave Backbone Communications System

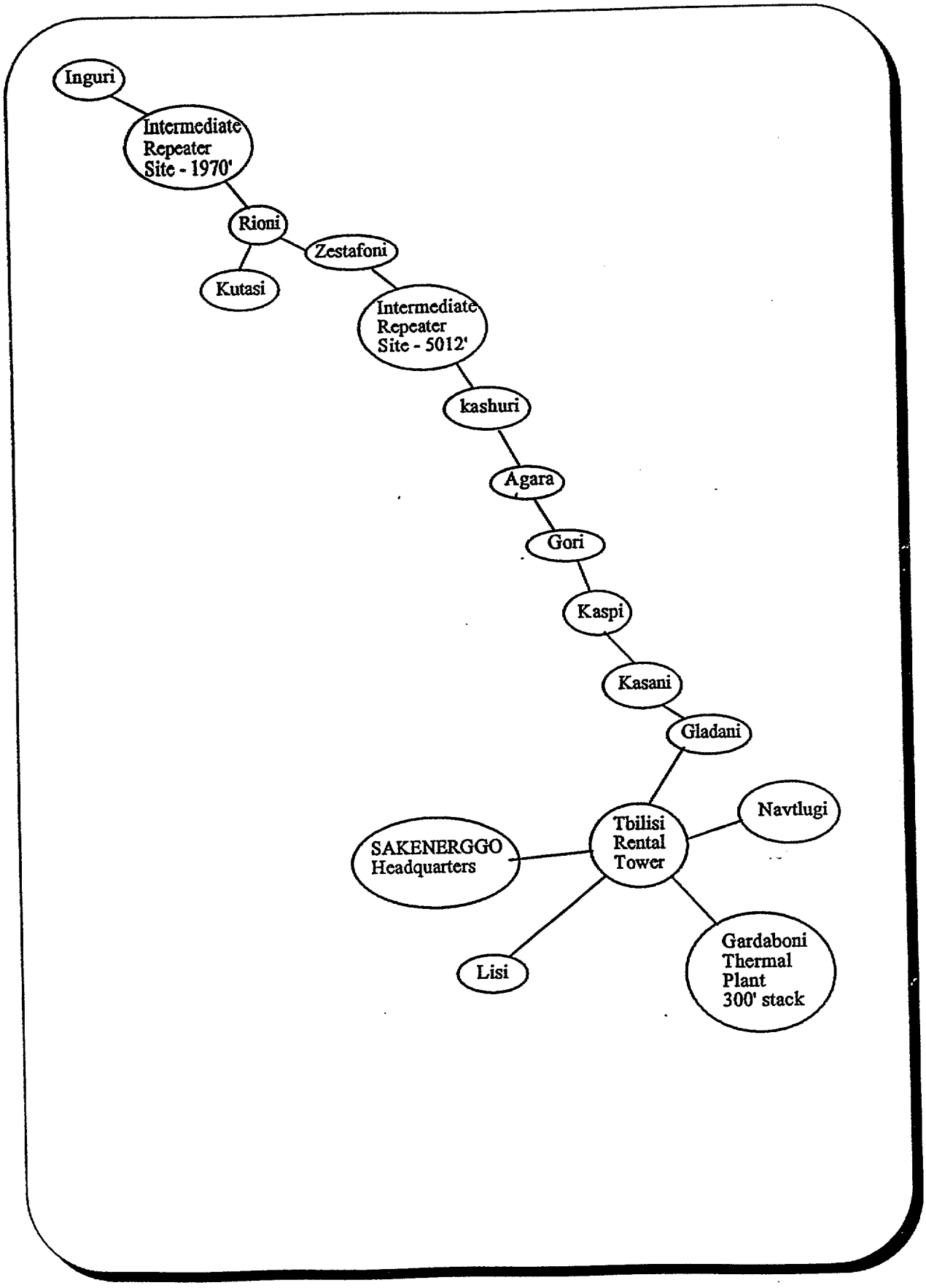

APPENDIX D

REPUBLIC OF GEORGIA STUDY - PROCUREMENT PACKAGE COMMUNICATIONS

	Quantity	Estimated Cost in '96 US $
1. POWER LINE CARRIER (PLC) REHABILITATION - PACKAGE		
- 2000 Amp. wave traps - 500 kV	6	58,800
- Line tuner - 500 kV	6	18,000
- Spare Parts - 500 kV	1 set	20,000
- 2000 Amp. wave traps - 220 kV	14	137,200
- 1200 Amp. wave traps - 220 kV	40	268,000
- Line tuner - 220 kV	54	162,000
- RFL	17	340,000
- Spare Parts - 220 kV	9 sets	45,000
- 800 Amp. wave traps - 110 kV	26	137,800
- Line tuner - 110 kV	26	78,000
- RFL	13	260,000
- Spare Parts		25,000
- PLC back-up power supply for 17 sites	17	51,000
- Repair parts for Yugoslavian equipment		198,000
Subtotal		1,798,800
2. TBILISI AND KUTAISI MICROWAVE COMMUNICATION		
Tower structure for Tbilisi microwave	4	80,000
Communication equipment for Tbilisi microwave system		453,000
Local material (including buildings for Gldani and Lisi)		24,000
Spare parts		20,000
Tower structure for Kutaisi microwave		40,000
Communication equipment for Kutaisi microwave system		142,000
Local material		6,000
Spare parts		20,000
Subtotal		785,000

	Quantity	Estimated Cost in '96 US $
3. LOCAL & LONG DISTANCE RADIO DISPATCH COMMUNICATION		
Radio station 2-30 MHz	7	30,000
Power supplies	7	10,000
Antennas and Cables	7	4,000
Base radio station	30	60,000
Substation radios	100	150,000
Radio Test Equipment	1	25,000
Power Supplies		50,000
Telephone Switch Installation		20,000
Spare parts		20,000
Subtotal		369,000
4. FOREIGN LABOR FOR ABOVE SIX PACKAGES		
1. Power Line Carrier (PLC) Rehabilitation - Package		261,000
2. Tbilisi Microwave Communication Package		178,000
3. Kutaisi Microwave Communication Package		77,000
4. Overall Project Management		250,000
Subtotal		766,000
5. SAKENERGO (DOMESTIC LABOR)		
1. Power Line Carrier (PLC) Rehabilitation - Package		23,600
2. Tbilisi Microwave Communication Package		60,000
3. Kutaisi Microwave Communication Package		30,000
4. Long Distance Radio Dispatch Communication		6,000
5. Local Radio Equipment		10,000
Subtotal		129,600
6. CONTINGENCIES FOR TELECOMMUNICATION PACKAGES		
1. Power Line Carrier (PLC) Rehabilitation - Package		290,000
2. Tbilisi Microwave Communication Package		115,000
3. Kutaisi Microwave Communication Package		43,500
4. Long Distance Radio Dispatch Communication		7,500
5. Local Radio Equipment		47,250
Subtotal		503,250
Total		4,351,650

	Quantity	Estimated Cost in '96 US $
DOMESTIC MATERIAL		
Jumpers, connectors, insulators, cable, etc. for Lajanuri		1,000
Jumpers, connectors, insulators, cable, etc. for Khrami II		1,000
Jumpers, connectors, insulators, cable, etc. for Tkibuli		9,400
Jumpers, connectors, insulators, cable, etc. for Vartsikhe		1,500
Subtotal		12,900
FOREIGN MATERIAL		
Jumpers, connectors, insulators, cable, etc. for Vartsikhe		50,000
SITE SUPERVISION AND TRAINING		
For Lajanuri		135,000
For Khrami II		135,000
For Tkibuli		135,000
For Vartsikhe		67,500
Subtotal		472,500
ENGINEERING AND DESIGN		
For Lajanuri		80,000
For Khrami II		300,000
For Tkibuli		120,000
For Vartsikhe		90,000
Subtotal		590,000
SPARE PARTS		
For Lajanuri		25,000
For Khrami II		150,000
For Tkibuli		25,000
For Vartsikhe		75,000
Subtotal		275,000
TRANSFORMER OIL		
Transformer oil for Lajanuri		2,600
Transformer oil for Tkibuli		6,600
Subtotal		9,200

	Quantity	Estimated Cost in '96 US $
CONTINGENCIES		
For Lajanuri		95,415
For Khrami II		338,220
For Tkibuli		156,450
For Vartsikhe		289,550
Subtotal		879,635
Total (Excl. $218,000 for Vartsikhe Civil Work)		6,881,135

APPENDIX E

REPUBLIC OF GEORGIA STUDY - PROCUREMENT PACKAGE
SUBSTATIONS

	Quantity	Estimated Cost in '96 US $
1. TRANSFORMERS		
LAJANURI SUBSTATION		
3 Phase, 2500 kVA, 35/10.5 kV Transformer	1	96,000
3 Phase, 560 kVA 35/0.4 kV Transformer	1	75,000
1 Phase 110 kV Potential Transformer	3	19,200
Repair 80 MVA, 220/10.5 kV Transformer at Lajanur	1	10,500
KHRAMI II SUBSTATION		
1 Phase, 25 MVA, 220/110/10.5 kV Auto Transformer	6	2,700,000
TKIBULI SUBSTATION		
3 Phase, 80 MVA, 110/10.5 kV GSU Transformer	1	500,000
3 Phase, 560 kVA, 10.5/0.4 kV Transformer	1	62,400
1 Phase 110 kV Potential Transformer	3	6,400
VARTSIKHE SUBSTATION		
1 Phase, 110 kV Current Transformer	6	18,000
1 Phase, 110 kV Potential Transformer	6	6,400
Subtotal		3,493,900
2. CIRCUIT BREAKERS		
LAJANURI SUBSTATION		
3 phase, 220 kV Circuit Breaker	1	160,000
KHRAMI II SUBSTATION		
3 Phase, 220 kV disconnect switches	4	44,500
3 Phase, 220 kV surge arresters	2	3,200
TKIBULI SUBSTATION		
3 Phase, 110 kV Circuit Breakers	1	80,000
3 Phase, 110 kV disconnect switches	10	65,000
VARTSIKHE SUBSTATION		
3 Phase, 110 kV Circuit Breakers	8	480,000
3 Phase, 110 kV disconnect switches	2	13,000
Subtotal		845,700

	Quantity	Estimated Cost in '96 US $
SAKENERGO (DOMESTIC LABOR)		
Rebuild 110/35/10.5 kV Transformer at Lajanuri	1	12,000
Replace 2500 kVA, 35/10.5 kV Transformer at Lajanuri	1	2,500
Replace 560 kVA, 35/0.4 kV Transformer at Lajanuri	1	1,000
Replace 100 kVA Potential Transformer at Lajanuri	1 set	500
Replace 3 phase, 220 kV Circuit Breaker at Lajanuri	1	2,200
Repair 3 phase, 80 MVA, 220/10.5 kV Transformer at Lajanuri	1	3,500
Repair foundation, jumpers, connectors, insulators, etc. at Lajanuri	1 set	3,500
Field mobilization, local transportation for Lajanuri		6,600
Replace 220 kV disconnect switches at Khrami II	4 set	2,800
Replace 220 kV surge arresters at Khrami II	2 set	100
Replace 25 MVA, 220/110/10.5 kV transformers at Khrami II	6	36,000
Repair foundation, jumpers, connectors, insulators, etc. at Khrami II		3,000
Field mobilization, local transportation for Khrami II		6,600
Prepare and install 80 MVA, 110/10.5 kV transformer at Tkibuli	1	4,000
Install 80 MVA, 110/10.5 transformer at Tkibuli	1	9,000
Replace 560 kVA, 110/0.4 kV transformer at Tkibuli	1	800
Replace 110 kV circuit breaker at Tkibuli	1	7,500
Replace 110 kV potential transformer at Tkibuli	1	100
Replace 110 kV disconnect switches at Tkibuli	10	4,000
Repair foundation, jumpers, connectors, insulators, etc. at Tkibuli		1,300
Field mobilization, local transportation for Tkibuli		6,500
Replace 110 kV current transformers at Vartsikhe	2	1,200
Install 3 phase 110 kV circuit Breakers at Vartsikhe	8	120,000
Replace 3 phase 110 kV potential transformers at Vartsikhe	2	100
Replace 3 phase 110 kV air break disconnects at Vartsikhe	2	800
Repair foundation, jumpers, connectors, insulators, etc. at Vartsikhe		3,500
Field mobilization, local transportation for Vartsikhe		13,200
Subtotal		252,300