PN-ACB-649

Measuring soil processes in agricultural research

EDITED BY
K B Laryea, P Pathak, and J C Katyal

ICRISAT
International Crops Research Institute for the Semi-Arid Tropics
Patancheru 502 324, Andhra Pradesh, India

भाकृअनुप
ICAR
CRIDA
Central Research Institute for Dryland Agriculture
Santoshnagar, Hyderabad 500 659, Andhra Pradesh, India

1997

Contributors

K B Laryea
P Pathak
N K Awadhwal
K P C Rao
Piara Singh

Soils and Agroclimatology Division, ICRISAT Asia Center, Patancheru 502 324, Andhra Pradesh, India

K P R Vittal
Shriniwas Sharma

Central Research Institute for Dryland Agriculture, Santoshnagar, Hyderabad 500 659, Andhra Pradesh, India

Acknowledgments

We are very grateful to Y Prabhakara Rao (Junior Secretary) for typing the revised version after the suggestions and comments of the internal reviewers had been incorporated. We also thank M M Babu [Research Associate II (Engineering)], S T Srinivasan (Research Associate II) and Ch Srinivasa Rao (Research Associate I), for drawing the diagrams and sketches.

Copyright ©1997 by the International Crops Research Institute for the Semi-Arid Tropics (ICRISAT).

All rights reserved. Except for quotations of short passages for the purposes of criticism and review, no part of this publication may be reproduced, stored in retrieval systems, or transmitted, in any form or by any means, electronic, mechanical, photocopying, recording, or otherwise, without prior permission of ICRISAT. It is hoped that this copyright declaration will not diminish the bonafide use of its research findings in agricultural research and development in or for the tropics.

The designations employed and the presentation of the material in this publication do not imply the expression of any opinion whatsoever on the part of ICRISAT concerning the legal status of any country, territory, city or area, or of its authorities, or concerning the delimitation of its frontiers or boundaries. Where trade names are used this does not constitute endorsement of or discrimination against any product by ICRISAT or CRIDA, nor does it imply registration under FIFRA as amended.

Citation Laryea, K.B., Pathak, P., and Katyal, J. C. (eds.). 1997. Measuring soil processes in agricultural research. Technical Manual no. 3. (In En. Abstracts in En, Fr.) Patancheru 502 324, Andhra Pradesh, India: International Crops Research Institute for the Semi-Arid Tropics; and Hyderabad 500 659, Andhra Pradesh, India: Central Research Institute for Dryland Agriculture. 100 pp. ISBN 92-9066-359-6. Order code TME 003.

Abstract Soil and crop management strategies (e.g., tillage, bunding, cropping intensity, and crop sequencing) are location- and season-specific in the way they affect soil processes and resource utilization by crops. Research findings on these effects therefore need to be modeled if they are to be extrapolated to other locations with similar soils and climatic conditions. This manual presents practical methods for assessing management effects on such soil processes as water infiltration and erosion by water, and on water, air, and nutrient use by crops. It covers the basic elements of soil physical characterization, and deals principally with the role of soil structure on water infiltration and percolation, heat flow, aeration, and the mobility of roots and soil microorganisms. The authors discuss the agronomic and engineering practices that affect soil processes; and the effects of such strategies as contour cultivation, organic and inorganic amendments, watershed management, and soil surface manipulations are emphasized.

Résumé *Détermination des processus du sol dans la recherche agricole:* Les méthodes d'aménagement du sol et des cultures (ex. labour, formation de banquettes, intensité d'exploitation et succession culturale) dépendent des localités et des saisons dans la manière dont elles influent sur les processus du sol et l'utilisation des ressources par les cultures. Les résultats des études sur ces effets devraient être encadrés dans des modèles afin de les extrapoler à d'autres localités ayant des sols et des conditions climatiques similaires. Cet ouvrage présente des méthodes pratiques pour mesurer des effets d'aménagement sur des processus du sol tels que l'infiltration de l'eau et l'érosion par l'eau ainsi que sur l'eau, l'air et l'utilisation des éléments nutritifs par des cultures. Le manuel traite des éléments fondamentaux de la caractérisation physique du sol, en mettant l'accent sur le rôle de la structure du sol dans l'infiltration de l'eau, l'écoulement de la chaleur, l'aération, et sur la mobilité des racines et des microorganismes. Les auteurs examinent les pratiques agronomiques et de génie qui influent sur les processus du sol. Les effets des pratiques culturales telles que l'aménagement de banquettes selon les courbes de niveau, la fertilisation organique et inorganique, l'aménagement des bassins versants et les travaux à la surface du sol sont soulignés.

The research activities were partially supported by:

ACIAR Australian Centre for International Agricultural Research,

Commission of the European Communities,

Japanese Official Development Assistance, and

DFID Department for International Development, UK.

Contents

Foreword
K K Lee 4

Elements of soil physical characterization
K B Laryea 5

Soil management practices and strategies in relation to soil processes
K P C Rao and P Pathak 12

Water infiltration into soil
K P C Rao and Shriniwas Sharma 22

Runoff and soil loss measurement
P Pathak, K P C Rao, and Shriniwas Sharma 35

Soil moisture measurement
Piara Singh and K P R Vittal 65

Soil structure
N K Awadhwal 83

Simulation modeling
K P C Rao 95

Foreword

It is widely accepted that, to a large extent, rainfall in rainfed farming areas determines crop production outcomes. In the semi-arid tropics (SAT), the quantity of rainfall per se is not necessarily a constraint to agricultural production. What might be constraining agricultural production is the inability to make the rainwater enter the soil effectively and thereafter grow crops using proven management strategies that utilize the soil water efficiently.

There are several strategies for sustainable use of soil and water: these include in-situ soil and moisture conservation, runoff harvesting and recycling, and watershed development. The main aim in most of these strategies is to conserve soil and water to increase and sustain crop productivity. This implies that technologies used in a particular strategy will not deteriorate the resource base. There is therefore a need to have proven measurement techniques by which to assess the effects of different technologies on soil properties and processes.

This manual was prepared for a training workshop on physical measurements for assessing management effects on soil processes and resource utilization. It covers some measurement techniques for characterizing soil physical properties, for estimating the root zone water balance, and for assessing runoff and water infiltration into soil. Soil and water conservation experiments are season- and location-specific. Extrapolation of experimental results to other locations is tenuous. Such experiments are also time-consuming and expensive to conduct. The manual suggests using validated simulation modeling for the preliminary examination of management effects on soil and hydrological processes. That way, only treatments that have been found to be effective can be further evaluated experimentally. Simulation modeling can also be used to examine long-term management effects on soil processes and resource conservation and utilization.

There is no doubt that the procedures outlined in this manual are fundamental means by which to assess improved management effects on soil processes and to successfully apply soil management technologies to agricultural lands. The manual's target readers are agricultural scientists who are actively involved in measuring and monitoring soil physical and hydrological processes in various experiments. It is hoped that it will help them keep abreast of the latest techniques.

I believe this manual will also be an important source of information on measurement of soil management effects on soil processes.

K K Lee
Acting Research Division Director
Soils and Agroclimatology Division
ICRISAT

Elements of Soil Physical Characterization

K B Laryea

Introduction

Soil management aims at manipulating soil structure in such a way that the soil environment will provide optimum temperature, water, air, and nutrients for the growth of roots and beneficial soil organisms. Judicious soil management requires an understanding of the physical, chemical, and biological processes that influence soil structural stability. It also requires an understanding of how structural stability in turn affects processes involved in the water balance of the root zone, e.g., infiltration, percolation, evaporation, runoff, and erosion.

Soil structure and its stability are important characteristics that influence most soil physical processes. They have profound influence on water infiltration and percolation. Soil structure first affects overland flow through its effects on infiltration. When infiltration is high due to good soil structure, and rainfall intensity is less than the infiltration rate, no rainwater accumulates on the surface. However, deep percolation can increase, since the soil profile holds a finite amount of water. This percolation will in turn influence movement of soil nutrients and leaching beyond the root zone. Secondly, soil surface roughness, which is an attribute of structure, influences runoff volume and rate through the capture and retention of excess rainfall on the surface to allow more time for infiltration to occur. Surface roughness also retards overland flow.

Soil structure affects the air flux into and out of the soil and therefore influences soil aeration. It affects heat flow in a soil and therefore its temperature regime. The effects of soil structure on soil aeration and soil temperature in turn influence soil biological activity. Changes in this biological activity often affect nutrient transformations in soil. Therefore nutrient transformations in soil are indirectly affected by soil structural changes. Organic matter, by-products, and exudates from soil organisms also affect soil structural stability. Furthermore, through its effect on mechanical resistance, soil structure can directly affect the movement of soil organisms, including plant roots and macro-organisms such as soil arthropods and earthworms.

In this section, we first discuss soil structural instability and then examine the components of the root zone water balance that are influenced by structural instability. We will highlight the importance of soil management in stabilizing structure and, as a consequence, in reducing adverse effects of the root zone water balance.

Structurally unstable soils are ones in which there is not only a rapid decline in infiltration rate when water is added to the surface, but also the original structure disappears as aggregates break down. Consequently, unless there is some special mechanism for aggregate reformation on drying, the soil has a compact structure with, generally, small pore sizes. The resultant compact soil allows scant infiltration when the next rainfall event or irrigation cycle begins.

The qualitative description of structural instability is not easy, since the phenomenon is associated with several forms of aggregate breakdown, e.g., there can be *dispersion* (a chemical phenomenon), *slaking* (a physical process whereby large aggregates fall into smaller ones but remain coagulated), and *explosive disintegration* due to air entrapment. All these forms of aggregate breakdown result in sealing when the soil is wet so that very little water is transmitted into the soil profile. Upon drying, the soil crusts, so that most of the subsequent rainfall is shed as runoff. In some Alfisols in the semi-arid tropics, a considerable depth of soil in the cultivated layer loses its structure upon wetting by rain, slumps, and produces a hard impermeable layer when dry. Such a hard impermeable layer sheds most of the subsequent rainfall as runoff because it has practically no macropores. Its pore size distribution is dominated by small pores. Crop production is affected because aeration becomes limited, and root movement restricted in the impermeable layer. Because of poor aeration and the high mechanical strength of the structurally poor impermeable layer, seed germination is often poor, and seedling emergence is difficult. Therefore, poor crop establishment becomes a major constraint to production.

The major causes of structural instability are rainfall intensity, type of clay minerals, organic matter content, oxides of iron and aluminum, type of cations on the clay exchange complex, and management. The effects of these factors are briefly discussed below.

In the tropics and subtropics where rainfall intensities can be high and drop sizes large, raindrop impact is a common cause of disintegration of soil aggregates into their ultimate particles. Cover (i.e., crop cover or crop residues) reduces raindrop impact, thus reducing disintegration of soil aggregates.

Structural stability results internally from bonds between clay plates, packets of clay plates (domains), and other particles. Consequently, clay type has a strong influence on structural stability. This influence is accentuated by the type of cations on the clay complex. Soils tend to swell and disperse more readily when the clay exchange complex is dominated by cations with low valence. Within each valence group, the smaller the ionic radius, the more readily will a soil swell and disperse. Therefore when sodium cations (Na^+) occupy a large fraction of the exchange complex, the soil tends to be chemically unstable. In contrast, the soil will be stable if a substantial portion of the exchange complex has the divalent cations calcium (Ca^{2+}) and magnesium (Mg^{2+}). The electrolyte concentration of the soil solution affects the

extent of the double layer. Therefore the tendency to swell is reduced when the soil solution has a high concentration of solutes in water.

The role of organic matter in structural stability is either through entanglement by fungal hyphae and/or roots, or through the decomposition products and secretions (polysaccharides and polyurinides) of roots, microorganisms, and soil animals.

Oxides of iron (Fe^{2+}) and aluminum (Al^{3+}) act alone, or jointly with organic matter to stabilize aggregates. However, the effectiveness of oxides of Fe^{2+} and Al^{3+} as structural stabilizers depends on their distribution, since they can be present in soils as small discrete particles, and as such contribute very little to stability.

Lastly, agricultural management practices affect soil structure. Machines and farm animals compact soil, and tillage loosens it by breaking it up into aggregates. Continual tillage, however, pulverizes soil aggregates, thus rendering them unstable. Clean tillage exposes aggregates to raindrop impact. It also encourages a more rapid organic matter decomposition, thus affecting the stability that can be conferred on soil by organic matter.

Components of the Water Balance

In the classical water balance equation of the root zone, the change in profile water content (ΔW) during a specified period is equated to the difference between the amount of water added and that lost to soil. Water added to soil includes precipitation (P), irrigation (I_r), and runon (R_0). That lost to soil includes runoff (R_f), deep percolation beyond the root zone (D), evaporation from soil (E), and transpiration (T). Therefore

$$\Delta W = (P + I_r + R_0) - (R_f + D + E + T). \qquad (1)$$

The change in water content, ΔW, may be positive (depletion) or negative (accretion). It can be measured in the field with a neutron moisture meter or any appropriate in-situ method (e.g., time domain reflectometer) for measuring water content. Precipitation, P, can be measured with an automatic rain-gauge recorder. If irrigated, I_r can be measured with flow-measuring devices, e.g., V-notch, or rectangular weirs, connected to a stage level recorder to facilitate continual measurement. The volumes of R_0 and R_f can be measured with similar devices. The flux of water contributing to D can be estimated using Darcy's law if tensiometers are inserted at 15-cm depth intervals beyond the root zone to measure the hydraulic potential gradient.

Suppose D is defined as water lost beyond 2.0-m depth, then the tensiometers will be placed at 1.85 m, 2.00 m, and 2.15 m. This implies that the effective rooting depth is less than 2 m.

Hydraulic conductivity (K), as a function of water content (θ), needs to be known a priori for 1.85–2.15-m depth. Therefore, it would be necessary to determine $K(\theta)$ on large core samples taken from that depth. Alternatively, the unsteady dra'inage-flux method can be used to

obtain in-situ $K(\theta)$ measurement at the required depth. However, drainage at such depths, particularly in clay soils, can be slow and substantial water content differences might take a long time to occur. Also, because in this method tensiometers are used to obtain hydraulic potentials, the $K(\theta)$ function will be restricted to water contents corresponding to hydraulic potentials 0 to –0.085 MPa. Fortunately, this range of potentials includes matric potentials (ψ_m) associated with significant water movement. The evapotranspiration (ET, which is the sum of E and T) can then be estimated by difference, or microlysimeters can be used to estimate E, and diffusion porometers to estimate T.

In eqn 1, P is not amenable to control. However, after reaching the ground, precipitation can be managed in various ways for different purposes. During a rainy period in a hydrologically independent field, $I_r=0$, $E \simeq 0$, $T \simeq 0$, and $R_0=0$, so that eqn 1 becomes

$$R_f = P-(\Delta W + D). \qquad (2)$$

Eqn (2) indicates that surface runoff occurs when $P > (\Delta W + D)$.

Infiltration and Percolation

Infiltration refers to the entry of water into a soil profile through the ground surface. This process is controlled by many factors, one of which is the structure of the soil at ground surface. The infiltration rate influences runoff rate and volume and the fraction of rainfall that is eventually stored in the soil profile for crop production. A number of empirical and process-based infiltration equations have been used by researchers in the past. Of these, the quasi-analytical solution of the differential equation governing downward infiltration derived by Philip (1957) has been very widely used. It relates cumulative infiltration (I) to elapsed time (t) in a power series of the form

$$I(t) = s_1 t^{1/2} + s_2 t + s_3 t^{3/2} + \ldots + s_n t^{n/2} + K_0 t \qquad (3)$$

in which the coefficients s_2, s_3, ... s_n are calculated from the moisture characteristics $\psi_m(\theta)$ and the $K(\theta)$ functions, and K_0 is the hydraulic conductivity at water content θ_0 of the wetted surface. Sorptivity, s_1, describes initial absorption of water by soil as a result of the matric potential gradients alone. Generally, the two-parameter form of eqn (3) describes ponded infiltration fairly well for short periods of time. It is of the form

$$I(t) = s_1 t^{1/2} + At \qquad (4)$$

where the transmission coefficient, A, is a constant. Eqns (3) and (4) indicate that, when the soil is dry, the initial infiltration rate is high because of sorptivity (i.e., the high matric potential gradient between dry soil and the applied water) but, with time, the infiltration rate settles down to a steady rate, A, often referred to as the terminal infiltration rate. The sorptivity concept is used in the tension infiltrometer method of assessing soil structural stability. This is because the initial matric potential gradients will be different in soils when pore size distribution changes.

Cumulative infiltration (I) can be defined in terms of the components P and R_f of the water balance as

$$I = P - R_f. \quad (5)$$

Substitution of eqn (5) into (2), and rearrangement gives

$$\Delta W = I - (D + ET). \quad (6)$$

Therefore, through its effect on I, soil structural stability immensely influences ΔW, and water that will be available for deep percolation and evapotranspiration. In addition, I is influenced by rainfall intensity and the antecedent soil water content. Some of the soil management effects on infiltration are short-lived, while others are long-lasting. For example, tillage effects in terms of increased infiltration on an Alfisol, have been found at ICRISAT Asia Center (IAC) to last for a few weeks in the growing season, while improvement of structure by the roots of such perennial crops as *Cenchrus ciliaris* or *Stylosanthes hamata* have lasted for about three seasons or more.

Percolation is the movement of water through the soil profile. Percolation is governed by the moisture characteristics and the hydraulic conductivity function, and it is described by the partial differential equation of the form

$$\delta\theta/\delta t = \delta/\delta z[K(\theta)\delta H/\delta z] \quad (7)$$

where H is the hydraulic potential, and z is depth. The structure of the profile, i.e., presence or absence of cracks, indurated and/or stony layers strongly influences D in eqns (1) and (6) and $K(\theta)$ in eqn (7).

The presence of a hardpan in the soil profile invariably results in impeded drainage and the development of a perched water table whenever the profile above the hardpan becomes saturated. The consequence of impeded drainage in the soil is mottling, which is due to an oxidation-reduction process involving iron compounds in the profile.

Runoff and Erosion

Runoff volume and rate depend on rainfall amount and intensity, topography, and soil surface conditions including surface structure, roughness, and configuration. Like infiltration, runoff volume reflects the effectiveness of a soil management system if the rainfall amount, intensity, and topography are similar at any particular season to all the systems being compared. Though runoff from farmers' fields may be viewed as water lost to production, that loss invariably results in the recharge of streams, rivers, and eventually the seas. There are various methods for measuring runoff. These methods are discussed in detail in the section "runoff and soil loss measurement" of this manual.

Rain accumulates on a soil surface because rainfall intensity exceeds infiltration rate. It may also accumulate due to its intensity exceeding the mean saturated hydraulic conductivity of the soil profile in situations where the profile has been fully charged by antecedent rainfall. Then water either stagnates on flatland, or flows over sloping

land surfaces. As water flows on the land, it carries with it particles that have been dislodged from the soil mass by rainfall impact. Therefore, management systems that generally reduce runoff also reduce erosion. However, because the initial phase of soil erosion involves the disruption of large aggregates by raindrop impact, management systems that provide cover on the surface (particularly during the period between sowing and full crop canopy development), are efficient in reducing runoff and erosion. In this regard, soil fertility and appropriate cultivars and cropping systems play a major role in ensuring an adequate and quickly developed crop canopy to protect the soil surface.

Assessment of Management Effects Using a Modeling Approach

Field studies aimed at understanding the changes in soil properties and processes caused by the effect of soil management on crop productivity and the environment, are often location- and season-specific. Consequently, the generalization and extrapolation of the findings of such studies to other locations are tenuous. Long-term soil management research is expensive and time-consuming. Also, such studies often involve different disciplines in soil science, agronomy, and agricultural engineering. They also often involve a large number of variables and measurements. Consequently, field design, layout, and the execution of an experiment on a scale large enough to accommodate all the different measurements by different disciplines become very difficult, and sometimes impractical. In such situations, computer simulation of management effects on soil-crop systems can be used to test and select the different management combinations and site characteristics that are important. The most promising combinations of treatments for a site in a particular agroecological zone can be validated through field experiments. The duration of such field experiments will necessarily be short, because of the initial screening by computer simulation. The simulation model, together with stochastically supported databases, can then be used to predict long-term management effects on soil quality and crop performance for specific sites and crops.

There are a number of models that differ in scope and specific goals, e.g., the Decision Support System for Agrotechnology Transfer (DSSAT) (IBSNAT 1989), the Simulator for Water Resources in Rural Basins (SWRRB) (Arnold et al. 1990), the Chemicals, Runoff, and Erosion from Agricultural Management Systems (CREAMS) (Knisel 1980), the Erosion Productivity Impact Calculator (EPIC) (Williams et al. 1984) and the Productivity Erosion Runoff Functions to Evaluate Conservation Techniques (PERFECT) (Littleboy et al. 1989). Though some of the models will simulate the effect of changes in soil management on crop yields, they do not have subroutines to simulate, for example, tillage implement–soil interaction to obtain changes in soil structure, or the energy required to move implements through soil, or both. PERFECT was developed essentially to simulate the effects of soil management and environment through prediction of hydrologic parameters together

with crop growth and yield. It uses the relations between (a) crop residue and surface cover, (b) residue decomposition rates, runoff, and rainfall since the last tillage, and (c) crop growth and cover, to obtain system hydrology and consequent crop response to management. Its usefulness in assessing soil management response to crop growth and yield is discussed under Simulation Modeling below.

Conclusion

Soil management to a large extent influences soil structure and its stability. Soil structure, in turn, affects most soil processes, particularly those involved in the water budget of the root zone. Consequently, information on the changes in the components of the root zone water balance provides a means to assess the effectiveness of soil management strategies. To assess long-term soil management effects simulation modeling provides a cost-effective way of screening treatments for field experimentation.

References

Arnold, J.G., Williams, J.R., Nicks, A.D., and **Sammons, N.B.** 1990. SWRRB: a basin scale simulation model for soil and water resources management. College Station, Texas, USA: Texas A&M Press. 255 pp.

IBSNAT (International Benchmark Sites for Agrotechnology Transfer). 1989. Decision support system for agrotechnology transfer (DSSAT). DSSAT Users' Guide, version 2.1. IBSNAT Project, Department of Agronomy and Soil Science, University of Hawaii, Honolulu, USA. Honolulu, USA: University of Hawaii Press. 56 pp.

Knisel, W.G. (ed.) 1980. CREAMS, a field scale model for chemicals, runoff, and erosion from agricultural management systems. U.S. Department of Agriculture Conservation Research Report no. 26. Washington, DC, USA: United States Department of Agriculture. 643 pp.

Littleboy, M., Silburn, D.M., Freebairn, D.M., Woodruff, D.R., and **Hammer, G.L.** 1989. PERFECT: a computer simulation model of productivity erosion runoff functions to evaluate conservation techniques. Queensland Department of Primary Industries Bulletin QB89005. Brisbane, Australia: Queensland Department of Primary Industries. 119 pp.

Philip, J.R. 1957. The theory of infiltration: 4. Sorptivity and algebraic infiltration equations. Soil Science 84:257–265.

Williams, J.R., Jones, C.A., and **Dyke, P.T.** 1984. A modeling approach to determining the relationship between erosion and soil productivity. Transactions of the American Society of Agricultural Engineers 27:129–144.

Soil Management Practices and Strategies in Relation to Soil Processes

K P C Rao and P Pathak

Introduction

A number of soil and water conservation practices are used on soils in the SAT. Agronomic measures such as mulching, cover crops, and strip cropping, all ensure good rainfall infiltration into soil, whereas heavier mechanical operations (e.g., land-shaping, construction of waterways, contour bunds, graded bunds, ridges, and terraces) are based on reducing topographical hazards and ensuring safe removal of runoff. Both have feasibility limits. Very often, a combination of both types of measures is necessary for a sound conservation program. In this section, various agronomic and engineering measures for soil and water management are discussed in broad terms.

Agronomic Practices

The physical environment of the soil plays an important role in crop production through its influence on soil physical, chemical, and biological processes. Soil structure has tremendous influence on a soil's physical environment. Some important processes influenced by changes in soil structure are infiltration, water storage, runoff, erosion, nutrient cycling, and soil floral and faunal activity. Many soil and crop management practices play a significant role in altering soil structure. Some practices enhance structural development while others result in its deterioration. There is a need to adopt soil and crop management strategies that reduce the negative impact on soil structure and sustain crop production. For this, an understanding of the management effects on soil processes is necessary.

A comparison of natural vegetation with annual cropping on an Alfisol in Hyderabad, India, will highlight the effect of soil and crop management practices on soil structure and related processes (Table 1). When a piece of land under natural vegetation is brought under cultivation, the organic matter content of the soil declines. This results in structural deterioration. Poor soil structure reduces infiltration and makes the soil susceptible to runoff and erosion leading to degradation. The system becomes more dependent on external inputs to maintain productivity. The long-term consequence of this is unsustainable crop production. Agronomic practices commonly used by farmers or recommended by researchers are tillage, use of organic and inorganic amendments, crops and cropping systems including crop rotations, intercropping, mixed cropping, and agroforestry.

Table 1 — Effect of natural vegetation and annual cropping on various soil processes.

Soil processes	System 1 Natural vegetation	System 2 Annual cropping
Organic matter content	Increased	Decreased
Soil structure	Improved	Deteriorated
Sealing and crusting	Decreased	Increased
Runoff	Reduced	20–30% of seasonal rainfall
Erosion	Minimized	2–10 t ha^{-1}
Plant available water	Increased	Decreased
Chemical fertility	Increased	Needs additional inputs
Faunal activity	Increased	Declined

Tillage

Tillage, the physical manipulation of soil to change its structure or strength, is the most commonly used management practice. It is considered essential in the management of soils (El-Swaify et al. 1987). Tillage operations are generally carried out during the dry season or at the onset of the rainy season before the crop is sown. A large number of implements are used, the most common in India being the animal-drawn country plow. The depth of tillage achieved by a country plow varies between 10 and 15 cm depending on the soil condition at the time of tillage. Tillage increases the porosity of the tilled layer, increases surface roughness, creates a good seedbed and controls weeds. These, in turn, will influence infiltration, soil strength, seedling emergence, root growth, water use, and crop growth. Many studies have been conducted in the past to identify tillage intensity and depth requirements, and to understand the effect of tillage on various soil processes.

Laryea and Unger (1995) reviewed the work on tillage and grouped different tillage practices into clean tillage and conservation tillage systems. Clean tillage was defined as "a process of plowing and cultivation which incorporates all residues, and prevents growth of all vegetation except the particular crop desired during the growing season" (SSSA 1987). In most areas of the SAT the common practice is to harvest and remove all the above-ground biomass. This leaves the soil surface bare and exposed to degradation processes. The other form of tillage is conservation tillage and is defined by the Conservation Technology Information Center (CTIC 1993) as "any tillage and planting system in which at least 30% of the soil surface is covered by plant residue after planting to reduce erosion by water".

Clean tillage systems harm soil structure because they oxidize organic matter, discourage faunal activity, and pulverize the larger aggregates that define large pores (Cogle et al. 1994; Adem et al. 1984). In a long-term trial on an Alfisol at IAC, it was observed that tillage benefits are short-term. Rao et al. (1994) reported that the annual runoff from tilled

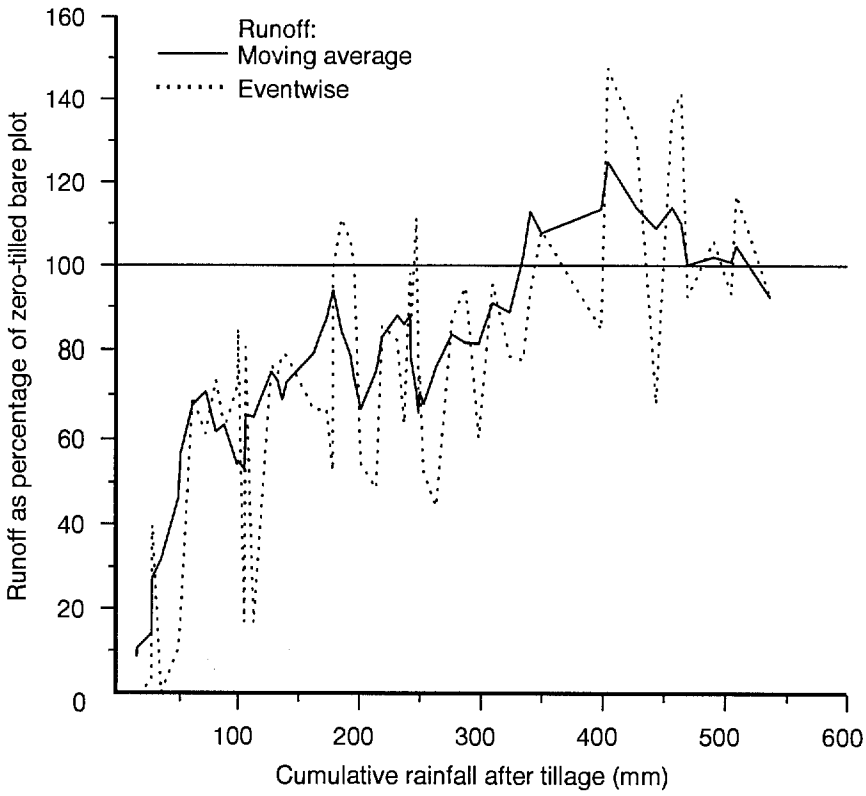

Figure 1 — Effect of rainfall on runoff from a tilled plot at ICRISAT Asia Center.

plots was not significantly different from that from untilled plots. The relation between runoff and rainfall after tillage (Fig. 1) shows an increasing trend in runoff with rainfall. In this graph runoff from tilled plots under sorghum as a percentage of that from zero-tilled bare (ZTB) plots is presented on the y-axis. Most of the tillage effects on infiltration were lost by the time the cumulative rainfall amount after tillage reached 150 mm. Tillage loosens the soil and reduces bulk density and soil strength. The benefit of this depends on the soil type. Awadhwal and Smith (1990) found that bulk density and strength of the tilled layer of an Alfisol reverted to pretillage values within three or four wetting and drying cycles. It was evident from their studies that tillage benefits in terms of infiltration and soil strength are not significant throughout the season. Tillage benefits in terms of infiltration are significant only at the beginning of the rainy season. However, tillage plays an important role in weed control. Most of the yield advantages attributable to clean tillage come from suppression or control of weeds.

Another important aspect of clean tillage is its effect on soil organic matter. The loss of organic matter due to frequent tillage has been reported by many workers. The reasons suggested for this are improved aeration, better distribution of bacterial and fungal hyphae, and exposure of previously occluded organic matter to microbial attack. The organic matter content of most soils in the SAT is very low, and any further reduction will adversely affect the soils' structural stability.

There is a growing realization that faunal activity plays an important role in improving the physical environment of soil. Earthworm activity contributes to changes in pore size distribution and influences the total porosity and macroporosity of soil. Earthworm activity also influences hydraulic conductivity, infiltration, and root growth. Ants, termites, and other soil arthropods also have similar effects on soil properties. Tillage has both direct and indirect effects on soil faunal activity. The direct effects are through disturbance of the habitat, and indirect effects include reduction in soil organic matter content (Cogle et al. 1994).

The negative impact of clean tillage on various soil processes can be avoided through adoption of conservation tillage practices. In a long-term trial at IAC, it was observed that the runoff from untilled plots that received farmyard manure (FYM) or crop residues was lower than that from tilled plots that did not receive additions of either FYM or crop residues. Addition of crop residues has a large impact on runoff reduction, erosion control, and soil faunal activity. Some of these aspects are discussed in the following section. A major drawback of conservation tillage is in control of weeds. Most conservation tillage practices depend on chemical methods of weed control. This, and the demand for crop residues for fuel, feed, and fencing are the major constraints to the adoption of these practices by resource-poor farmers.

Organic and inorganic amendments

Organic amendments such as FYM or crop residues are commonly added to soil to improve its organic matter content, and to increase its structural stability. These amendments act as agents in improving soil structure. Changes in soil structure are expected to be due to one or many of the following processes:

- Protection from raindrop impact when amendments are added as mulch.
- Increase in soil cohesion, and aggregate formation, and reduction in soil dispersion.
- Reduction in wettability and swelling.
- Increase in faunal activity.

The importance of organic amendments in maintaining soil structure is well recognized. Prasad and Goswami (1992) reviewed the information available from some long-term trials across India on the role of organic amendments in soil fertility. Improvement in soil physical properties was observed in most of these trials. Though the contribution of organic amendments to soil structure is well recognized, several constraints limit their adoption or use. Technically, it is difficult to build up organic matter in any appreciable quantity in SAT soils due to high rates of decomposition.

In a long-term study at IAC, the addition of 15 t ha^{-1} FYM yr^{-1} over 6 years showed a marginal improvement in the organic matter content of the surface soil. However, there were significant improvements in soil structural properties as indicated by runoff and permeability measurements. Runoff from FYM-amended plots was not significantly

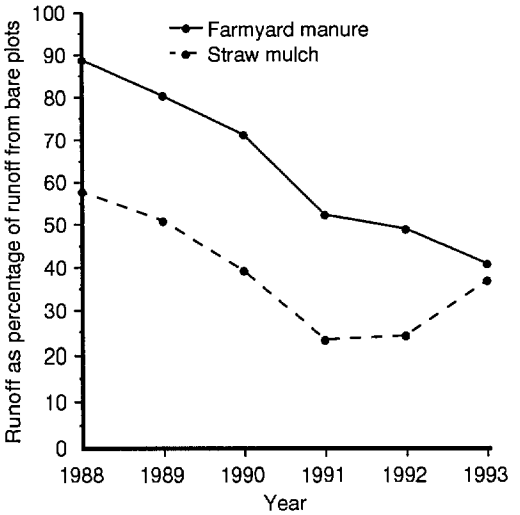

Figure 2 — Effect of two organic amendments on runoff.

different from that from unamended plots during the 1st year (Fig. 2). A gradual improvement in infiltration and reduction in runoff was observed in the following years. The protection offered by straw mulch was effective from the 1st year onwards. Practical constraints include the availability of straw, and the demand for its use as fodder and fuel. There is a need to find alternative strategies to improve the availability of these materials for use as soil amendments. Some alternatives proposed by Unger et al. (1991) include limited or selective residue removal, substitution of high-value forages for residue, alley cropping, use of wastelands for fodder and fuel production, and control of livestock numbers. Another strategy that seems to have potential is green manuring. Green manuring is an age-old practice under irrigated conditions in many parts of the world. Not much research has been done on green manuring under water-limited conditions.

Among the inorganic amendments, the most commonly used is gypsum. Sometimes gypsum is also used as a source of nutrients to supply calcium and/or sulfur to crops. When applied as an amendment, the aim is to change soil structure by increasing the electrolyte concentration and supplying calcium to replace sodium on the clay exchange complex. Gypsum will be effective on clayey soils where structural problems arise due to the imbalance in cation distribution on the exchange complex. Poor soil structure in clayey soils is indicated by very cloddy seedbeds, a narrow moisture range for tillage, an extreme range in soil moisture over a small vertical distance in the soil, surface sealing, and turbid runoff. Calcium on the exchange complex prevents dispersion of clay particles, restricts swelling, and encourages flocculation and aggregate formation.

Crops and cropping systems

The type of crop or cropping system has a pronounced effect on the physical environment of the soil. The major element affecting a soil's physical and hydrological properties is the presence of roots and shoots of growing crops. Improvements in the soil physical environment can be achieved by selecting crops and cropping systems that are effective in the amelioration of soil structure. The benefits to soil structure arise from the provision of ground cover to protect the soil surface, improvement of the organic matter content through the addition of leaf litter and root debris, increased ability of the roots to penetrate hard impermeable layers, channels left by decaying roots, and nitrogen fixation in the case of legumes.

The effectiveness of different crops and cropping systems in improving soil structure at different depths relates to the variation with depth in the amount of root mass produced. The root length density in the top 15 cm of soil generally increases in the order of row crops, cereals, and grasses (Kay 1990). Pasture crops with high root density in the soil improved infiltration and reduced runoff in a long-term trial at IAC. The

reduction in runoff was observed even 3 years after the removal of pasture and return to annual cropping. The benefits that are obtained from rotation of a shallow-rooted crop such as sorghum or pearl millet with a deep-rooted crop such as castor are often attributed to root activity. Roots of deep-rooted crops can penetrate the impermeable murrum layers. The biopores left after the decay of these roots help the succeeding crop.

Another aspect that determines the effectiveness of different cropping systems on soil structure is the spatial and temporal distribution of ground cover, and the contribution of leaf litter to ground cover. Intercropping short-duration sorghum with long-duration pigeonpea increased the period of ground cover from 90–100 days to 160–170 days (Natarajan and Willey 1981). Most of the agroforestry systems also help to increase the period of crop cover and litter addition. However, competition between crops and trees for water and sunlight is a major constraint to the adoption of agroforestry systems in the SAT. Particular emphasis is now being placed on legumes that provide nitrogen to succeeding crops and confer structural benefits to soil. Research has yet to identify a cropping system that has all the desirable characteristics, and is acceptable to farmers.

Engineering Practices

A number of engineering systems prevent excessive runoff. They involve either the reshaping and installation of soil conservation measures in a watershed to dispose of excess runoff at nonerosive rates, or the manipulation of soil surface roughness to trap surface water and allow more time for it to infiltrate. The engineering specifications and design detail of these systems can be obtained from such pertinent technical sources as the USDA Soil Conservation Service (1975), FAO publications, other engineering manuals (Hudson 1975; Beasley et al. 1972), and/or from experienced field conservationists.

Small watershed approach

The small agricultural watershed approach is an attempt to optimize the use of precipitation through improved soil, water, and crop management. The main areas to be considered when embarking on an agricultural watershed approach are the development of the following:

- A land-management system that will improve the soil moisture status for roots, control runoff and erosion, and, where necessary, increase infiltration of rainfall without unduly increasing deep percolation of water beyond the root zone.
- A waterway system that will safely convey excess runoff water from the land with minimum interference to agricultural operations.
- Technologies to enable application of available surface and groundwater to crops, in order to increase benefits, stabilize rainfed agriculture, and lengthen the growing season.
- An efficient system for runoff collection and its use to increase crop production in the watershed.

Land smoothing

Land smoothing is essential for the improved management of SAT soils. Landscapes in farmers' fields are generally quite uneven, with many depressions of various sizes. Small surface depressions that are obliterated through normal tillage operations are not subject to waterlogging. However, large depressions are generally more stable and act as receiving basins for eroded sediments. Once these sediments are deposited, waterlogging often results. To reduce the influence of such large depressions, it is necessary to smooth the land surface, and this is often done most efficiently in the direction of planned cultivation.

Land surface configuration and drainage systems

A number of in-situ soil management systems prevent excessive runoff (Laryea and Unger 1995). They concentrate and redistribute runoff in order to increase the water-use efficiency of crops (Laryea 1992). These systems involve the manipulation of the soil surface roughness or topographic modification of the land (land configuration) to trap and allow more time for infiltration of surface water to occur. Common among these runoff-retaining systems are the conventional graded furrows, conventional contour furrows, wide furrows, large contour furrows (constructed with Orthman tri-level equipment) (Jones 1981), the broadbed-and-furrow (BBF) system, terraces, pitting (scoops or small depressions on the soil surface), and tied ridges.

Conventional graded furrows are usually formed on 1-m centers with a 0.25% grade to the rows. Furrows are normally ridged across the upper end to prevent off-site runon. Conventional contour furrows are similar to graded furrows, except that the rows are made on the contour (zero row grade). Wide furrows have 1-m wide beds and 1-m wide furrows (2-m bed-furrow spacing). The maximum potential surface water storage capacity of wide furrows is about 120 mm, which is double the capacity of conventional contour furrows.

The Orthman system (Fig. 3,a) consists of large contour furrows with 0.75-m wide beds and 0.75-m wide furrows (1.5-m bed-furrow spacing). The centers of the furrows have small folds or grooves designed to hold runoff from small storms. The maximum potential surface-water storage of the furrows in this system is about 120 mm. The BBF system (Fig. 3,b) consists of 95-cm raised beds separated by 55-cm wide furrows (furrow grade of 0.4 to 0.8%) that drain into grassed waterways in a watershed.

Terraces are earth embankments, channels, or combinations of embankments and channels constructed across the slope at suitable spacings and with acceptable grades (ASAE 1983). Terraces are used for one or more of the following purposes: (a) reduce soil erosion, (b) provide for maximum retention of water for crop use, (c) remove surface runoff water at nonerosive velocity, (d) re-form land surface, (e) improve farmability, (f) reduce sediment content in runoff water, and (g) reduce peak runoff rates to installations downstream.

Terraces can be classified according to either their alignment, i.e., parallel and nonparallel, or cross-section, i.e., broadbase terrace, flat-

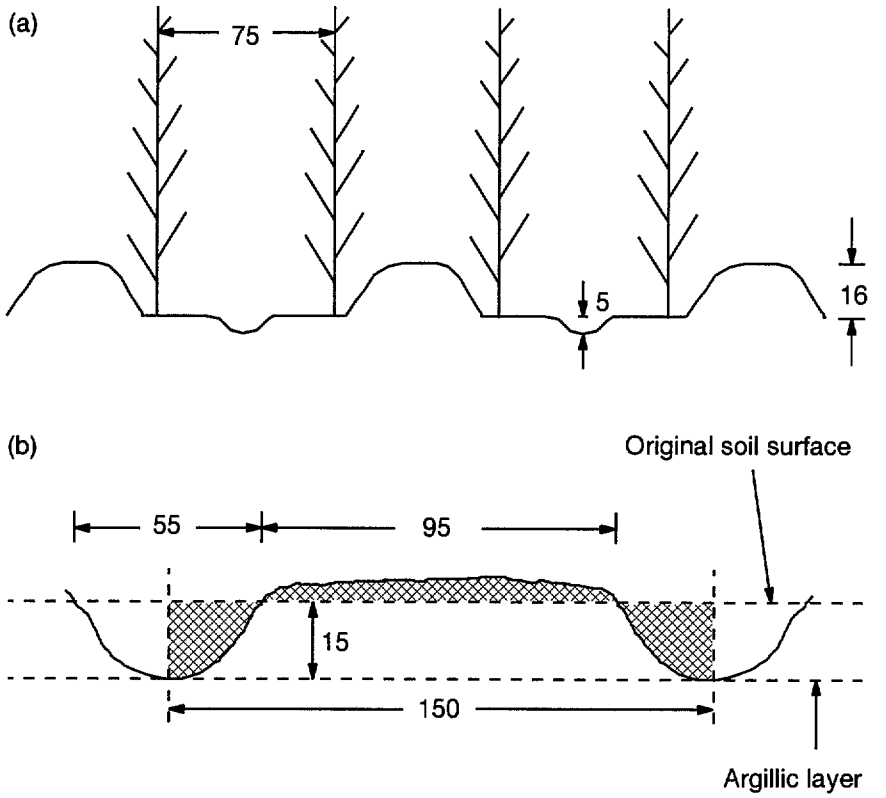

Figure 3 — Cross-section of (a) Orthman tri-level and (b) broadbed-and-furrow runoff-retaining systems. (Dimensions in centimeters.)

channel, or Zingg conservation bench (Zingg and Hauser 1959), or steep-backslope. They can also be classified according to their grade, i.e., level or graded. Alternatively, terraces can be classified according to their outlet, i.e., blocked outlet: where all water infiltrates into the terrace channel; grassed waterway: where water is removed by vegetated waterways to minimize erosion; or underground outlets: where water is removed from terrace channels through underground conduits that stop erosion and remove less land from production. On steep land, however, drop structures or stone pavements must be installed in the waterway to regulate the flow of water (Unger 1984).

The soil surface is pitted with small cavities (scoops) to increase surface roughness and to trap runoff water for crop production (Pathak and Laryea 1991). In addition to pitting, there are a number of microcatchments that are used to trap runoff. These include small catchments shaped either as semicircles or as triangles, with their tips on the contour. Water is impounded behind the bunds to the level of the contour, overflowing eventually and spreading to the next lower tier of bunds (Finkel and Finkel 1986). This system can induce more erosion if the small catchments are not well-designed and well-constructed.

References

Adem, H.H., Tisdall, J.M., and **Willoughby, P.** 1984. Tillage management changes size-distribution of aggregates and macrostructure of soils used for irrigated row-crops. Soil and Tillage Research 4:561–576.

ASAE (American Society of Agricultural Engineers). 1983. Design, layout, construction, and maintenance of terrace systems. Pages 526–529 *in* Agricultural Engineering Yearbook of Standards. 13th edn. Michigan, USA: American Society of Agricultural Engineers Press.

Awadhwal, N.K., and **Smith, G.D.** 1990. Performance of low-draft tillage implements on a hard setting Alfisol of the SAT in India. Soil Use and Management 6:28–31.

Beasley, R.P., Gregory, J.M., and **McCarty, T.R.** 1972. Erosion and sediment pollution control. 2nd edn. Ames, Iowa, USA: Iowa State University Press. 366 pp.

Cogle, A.L., Reddy, M.V., Rao, K.P.C., Smith, G.D., McGarry, D., and **Yule, D.F.** 1994. The role of biological practices and the soil biota in management of sealing, crusting and hardsetting soils. Presented at the Second International Symposium on Sealing and Hardsetting Soils, 7–11 Feb 1994, Brisbane, Australia.

CTIC (Conservation Technology Information Center). 1993. Conservation tillage definitions and types of systems. Conservation Impact 11(5):6.

El-Swaify, S.A., Singh, S., and **Pathak, P.** 1987. Physical and conservation constraints and management components for SAT Alfisols. Pages 33–48 *in* Alfisols in the semi-arid tropics: proceedings of the Consultants' Workshop on the State of the Art and Management Alternatives for Optimizing the Productivity of SAT Alfisols and Related Soils, 1–3 Dec 1983, ICRISAT Center, India. Patancheru 502 324, Andhra Pradesh, India: International Crops Research Institute for the Semi-Arid Tropics.

Finkel, H.J., and **Finkel, M.** 1986. Engineering measures: water harvesting. Pages 93–101 *in* Semi-arid soil and water conservation (Finkel, H.J., ed.). Boca Raton, FL 33431, USA: CRC Press.

Hudson, N.W. 1975. Field engineering for agricultural development. Oxford, UK: Clarendon Press. 225 pp.

Jones, O.R. 1981. Land forming effects on dryland sorghum production in the Southern Great Plains. Soil Science Society of America Journal 45:606–611.

Kay, B.D. 1990. Rates of change of soil structure under different cropping systems. Advances in Soil Science 12:1–52.

Laryea, K.B. 1992. Rainfed agriculture: water harvesting and soil water conservation. Outlook on Agriculture 21:271–277.

Laryea, K.B., and **Unger, P.W.** 1995. Soil physical constraints to plant growth and crop production: soil management. *In* Soil physical

constraints to plant growth and crop production. Rome, Italy: Food and Agriculture Organization of the United Nations.

Natarajan, M., and **Willey, R.W.** 1981. Sorghum pigeonpea intercropping and the effects of plant population density: 2. Resource use. Journal of Agricultural Science 95:59–65.

Pathak, P., and **Laryea, K.B.** 1991. Soil surface roughness for the in situ soil and water conservation on Alfisols. Pages 41–42 *in* Resource Management Program, Annual Report 1992. ICRISAT, Patancheru, Andhra Pradesh 502 324, India: International Crops Research Institute for the Semi-Arid Tropics. (Semiformal publication.)

Prasad, R., and **Goswami, N.N.** 1992. Soil fertility restoration and management for sustainable agriculture in South Asia. Advances in Soil Science 17:37–72.

Rao, K.P.C., Cogle, A.L., Srinivasan, S.T., Yule, D.F., and **Smith, G.D.** 1994. Effect of soil management practices on runoff and infiltration processes of a hardsetting Alfisol in the semi-arid tropics. Presented at the 8th ISCO Conference, Indian Council of Agricultural Research, New Delhi, India.

SSSA (Soil Science Society of America). 1987. Glossary of soil science terms. Madison, WI, USA: Soil Science Society of America. 44 pp.

Unger, P.W. 1984. Tillage systems for soil and water conservation. FAO Soils Bulletin 54. Rome, Italy: Food and Agriculture Organization of the United Nations. 278 pp.

Unger, P.W., Stewart, B.A., Parr, J.F., and **Singh, R.P.** 1991. Crop residue management and tillage methods for conserving soil and water in semi-arid regions. Soil and Tillage Research 20:219–240.

USDA (United States Department of Agriculture). 1975. Engineering field manual. Washington DC, USA: USDA Soil Conservation Service.

Zingg, A.W., and **Hauser, V.L.** 1959. Terrace benching to save potential runoff for semi-arid land. Agronomy Journal 51:289–292.

Water Infiltration into Soil

K P C Rao and Shriniwas Sharma

Introduction

Infiltration is the downward entry of water into soil through the soil surface. The rate at which water infiltrates is called the infiltration rate, an important soil property because it partitions rain into soil water and runoff. Infiltration depends on such factors as soil physical properties, the antecedent moisture content, surface cover, and soil management. Measurements of infiltration rate help to understand the effect of various management practices on runoff and on water held in the soil profile. There are many ways to measure infiltration, and the user needs to select an appropriate method based on the purpose of measurement and data requirement. Some commonly used methods are ring infiltrometers, basin flooding, disc permeameters, sprinklers, and rainfall simulators.

Ponded Infiltrometer Method

Equipment Ring infiltrometers are traditionally used to measure the infiltration rate of soil, and the double-ring infiltrometer (Fig. 1) is the one most commonly used. It consists of an inner and an outer ring. The rings can be fabricated locally using a 14–16-gauge iron sheet rolled into a cylinder. Give a smooth finish by grinding the rough surfaces at the joints. One end of the cylinder should be sharpened from the outside so that it can be easily driven into the soil. The diameters of the rings (or their dimensions if they are rectangular) vary. Generally, the diameter of the inner ring should be 30–35 cm and that of the outer ring 40–45 cm and their height is about 40–45 cm. Other materials required are a circular driving plate with a diameter 5 cm larger than that of the outer ring, a hammer of sufficient weight to drive the rings into the soil, a stop watch, polythene film to protect the soil surface, a gauge to measure the height of the water in the ring, or a constant head device and a water reservoir.

Principle Infiltration measurements can be made in two ways with infiltrometers. Their main principle is to measure the amount of water entering the soil profile as a function of time. In the first method, water is ponded on the surface and the rate of fall of water level in the inner ring is measured. This method is good for soils with low rate of infiltration, e.g., clay soils. The second method uses a device operating on the Mariotte bottle principle to maintain a constant head of water in the inner ring. The rate of flow of water into the soil is obtained by dividing the discharge ($cm^3\ h^{-1}$) from the reservoir by the area of the inner cylinder. This eliminates the effect of changing hydraulic head on infiltration.

Procedure It is desirable to have a description of the site that includes details of soil texture, pH, surface cover, surface condition, and stage of crop growth.

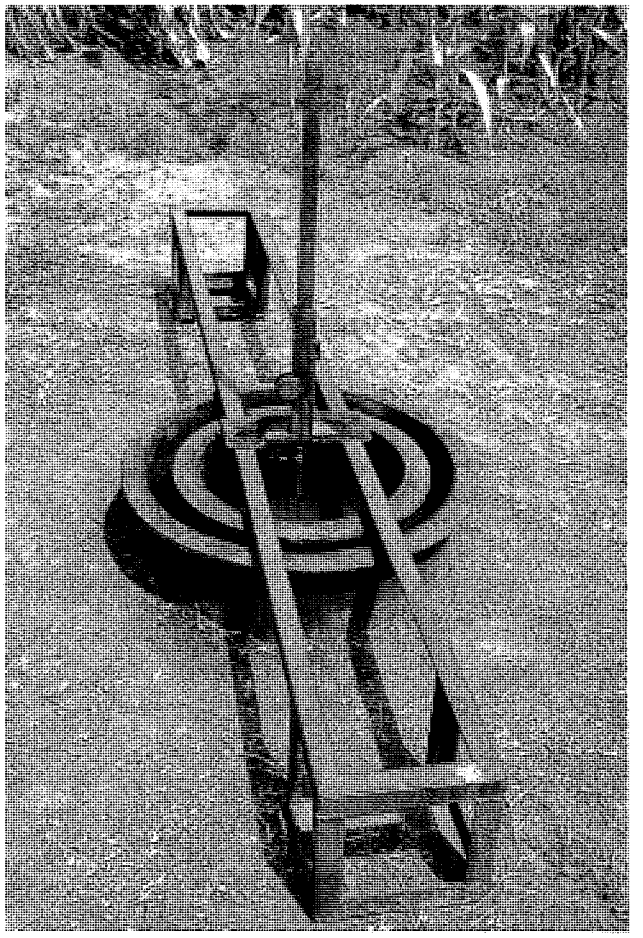

Figure 1 — Double-ring infiltrometer for measuring infiltration capacity of soil.

1 Select a site and suitable place for making measurements.

2 Place the inner cylinder on the selected spot and place the circular driving plate on the cylinder. Hammer the ring vertically into the ground to a depth of 15–20 cm. Use a spirit level to check that the edges of the cylinder are horizontal to the ground surface while the ring is driven vertically into the soil. Take care to keep soil disturbance to a minimum.

3 Place the outer ring in position and hammer it into the soil. Push dry soil into the space between the ring and the soil column.

4 Place the hook or staff gauge in the central ring.

5 Place the polythene film on the soil surface in the inner ring before filling it with water. This minimizes the disturbance to the soil surface.

6 Apply water to 10–15-cm depth first to soil in the outer ring, and then to soil in the inner ring. The water in the outer ring minimizes the lateral movement of water from the inner ring.

7 After the water has been added, slowly remove the film from the inner ring.

8 Record the falling water level in the inner ring at appropriate time intervals.

9 Infiltration measurements can also be made by maintaining a constant head of water in the inner ring. If this method is used the measurements will be of the amount of water passing from the constant head device corrected for the constant volume of water on the soil surface at suitable time intervals.

10 Continue recording observations until a steady rate is achieved. The frequency of observations depends on the infiltration rate of the soil. Generally a record of observations at the end of 1, 3, 5, 10, 20, 30, 45, 60, 90, and 120 min will be sufficient.

Table 1 — Sample datasheet for measuring infiltration by the falling-head method.

Date 06/06/86 **Location** BW 4A **Soil type** Vertisol
Texture Clay **Surface cover** Bare
Moisture 11.74% vol **pH** 8.0 **Inner ring diameter** 40 cm
Initial height (h_i) of water in inner ring 25 cm

Time (t) (min)	Difference in h_i–h (cm)
2	0.80
5	1.70
15	3.15
30	4.50
60	7.45
120	12.75
180	17.57
300	26.42
420	34.67

Calculations The sample datasheets (Tables 1 and 2) help in recording observations and in analyzing the data. Plot the cumulative depth of water (I) (i.e, the volume of water absorbed divided by the area of the inner (ring) entering the soil against time (t). The slope of the steady-state section of the I(t) relation gives the final infiltration rate.

Notes One major limitation to this method is the disturbance to the soil while placing the rings. It is very difficult to drive rings into soil when it is dry. Another problem that is often encountered is the contact between the soil column and the metal ring. To avoid these errors, the infiltration rings should be placed in the soil well before the measurements are made so that there is sufficient time for the disturbed soil to settle. However, in clay soils there is the tendency for the clay soil to shrink from the metal if it is installed a long time before infiltration measurements are made.

Disc Permeameter Method

The disc permeameter is designed to measure in-situ hydraulic properties of soils. It enables rapid measurement of hydraulic conductivity, sorptivity, macroscopic capillary length, and characteristic pore size with minimal disturbance to the soil. The main advantage of the disc permeameter is that different tensions, usually between -0.1×10^{-3} and -1.5×10^{-3} MPa can be applied to soil. This way, the contribution of various pore sizes (ranging from 3.0 to 0.2 mm) can be separated.

Table 2 — Sample datasheet for measuring infiltration by the constant-head method.

Date 10/02/92 **Location** RM 19B **Soil type** Alfisol
Texture Sandy loam **Surface cover** Bare
Moisture 9.67% vol **Area of inner ring** 491.75 cm^2
Depth of water in ring 3.0 cm **Radius of reservoir** 4.47 cm
Any other –

Height of water in the reservoir, h (cm)	Volume of water Q $Q=(h-d)\Pi r^2$ (cm^3)	Time (t) (min)	Cumulative infiltration Q/A (cm)
1	251.22	0.43	0.52
2	502.44	0.87	1.02
3	753.66	1.40	1.53
4	1004.88	2.00	2.04
5	1256.10	2.66	2.55
6	1507.32	3.44	3.07
7	1758.54	4.66	3.58
8	2009.76	6.18	4.09
9	2260.98	9.20	4.60
10	2512.20	12.73	5.11
11	2763.42	17.28	5.62
12	3014.64	21.80	6.13
13	3265.86	26.59	6.64
14	3517.08	31.60	7.15
15	3768.30	36.83	7.66
16	4019.52	42.37	8.17
17	4270.74	47.91	8.68
18	4521.96	53.45	9.20
19	773.18	58.98	9.71

Another advantage is that it can be placed directly on the soil surface with minimum disturbance. This makes it useful for investigating changes in the surface structure of soils.

Equipment The equipment includes a disc permeameter, numbered containers for moisture content determination, spatula, steel corer, driver, hammer, plastic bags, balance accurate to 10^{-5} kg (0.01 g), oven in which to dry samples at 105°C, shears, level, steel rule, stop watch, data sheets, buckets, and water supply.

The design of the disc permeameter for making unsaturated measurements is shown in Figure 2. The disc is made of clear perspex sheet and should be checked for leaks before observations are recorded. A graduated and calibrated water reservoir is attached to the disc. A side

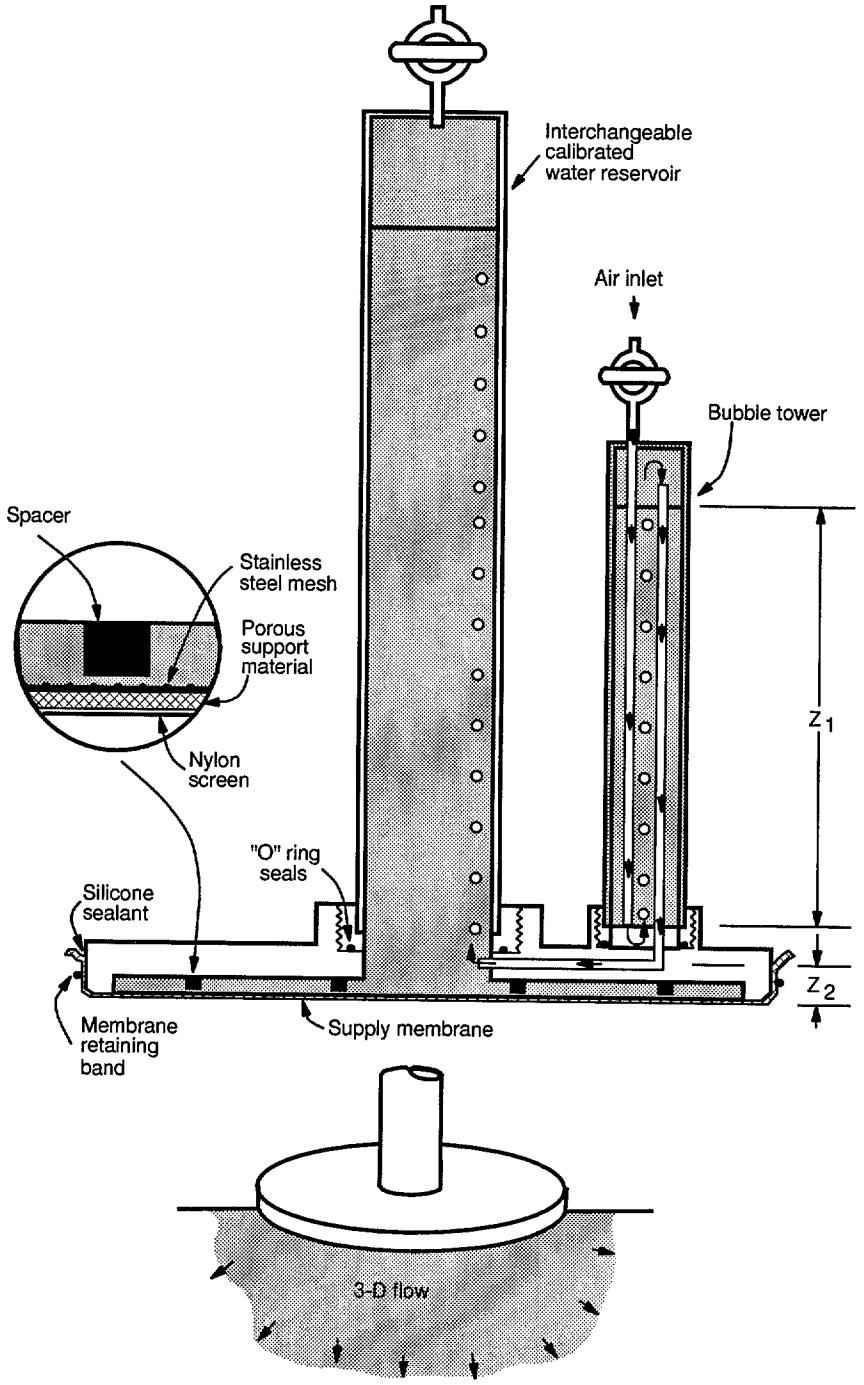

Three-dimensional surface flow from the disc

Figure 2 — The disc permeameter for unsaturated flow measurement in cropland soils.

bubble tower provides a pathway for air entering the reservoir as infiltration proceeds. The height of water in the bubble tower is used to adjust the supply potential. The bubble tower has a small-diameter tube that permits air to enter the tower from outside, and an identical tube to supply air from the tower to the reservoir. The water potential at the membrane surface is varied by altering the water level in the bubble tower.

Principle When a water source, such as a wet circular disc, is placed on the soil surface, the initial stages of water flow into the soil are dominated by the capillary properties of the soil. At steady-state, the flow is governed by the soil capillarity, gravity, the size of the disc, and the pressure at which water is supplied. In this technique both the initial and the steady-state flow rates are used to separate the capillarity and gravity contributions to soil-water flow.

Procedure

1 Prior to use, calibrate the reservoir. Remove the reservoir from the disc and secure it vertically upside down on a balance. Add a known volume of water and record the scale reading and the weight. Repeat several times over the length of the reservoir. Plot the weight against the scale reading.

2 Prepare the site at which observations are to be recorded. If it is flat and bare, place the disc permeameter directly on the soil surface.

3 If the site is not flat and bare it will be necessary to prepare a cap of contact material. Usually sand is used for this purpose. The area of cap should be 10 cm larger in diameter than the disc. Place a 3-mm high ring on the surface and fill it with sand. Smooth the surface by drawing a steel rule across the top of the ring. Carefully remove the ring.

4 Place the disc permeameter containing water on the sand cap and start the clock as soon as bubbling begins.

5 Record the time as often as possible during the early stage of infiltration.

6 Continue taking measurements until the flow rate is constant. The time of measurements depends on the type of soil; it can range from 0.2 to 6.0 h.

7 Use the sample datasheet given in Table 3.

8 After the run, remove the disc permeameter quickly and scrape aside a portion of the sand cap.

9 Sample the top 2–3 mm of soil with a spatula. Place the sample in an airtight container for weighing. The sample must be taken as soon as possible after removing the disc, and the depth of sampling should not be more than 5 mm.

Calculation *Reservoir calibration* (RC). This relates the fall in the height of reservoir with volume of water. RC is the slope of the plot of the weight of water in the reservoir versus the scale reading. It can be calculated by the relation

$$RC = (W_2 - W_1) * D / (SR_2 - SR_1) \quad (1)$$

Table 3 — Sample datasheet for measuring infiltration by the disc-permeameter method.

Date 03/06/94	**Location** RM 19B	**Soil type** Alfisol
Texture Sandy loam	**Surface cover** Bare	

Scale reading (cm)	Time (min)	Time, t (h)	Time$^{1/2}$ ($h^{1/2}$)	Infiltration (SR_2–SR_1) *RC	Cumulative infiltration $Q/\Pi r^2$ (cm)
1.5	0.01	0.0002	0.014	0.82	0.82
4.0	0.07	0.001	0.032	1.37	2.19
5.5	0.11	0.002	0.045	0.82	3.02
7.5	0.25	0.004	0.063	1.10	4.11
8.5	0.53	0.009	0.095	0.55	4.66
9.5	1.25	0.021	0.145	0.55	5.21
11	2.59	0.043	0.207	0.82	6.03
13	4.30	0.072	0.268	1.10	7.13
14	5.26	0.088	0.297	0.55	7.68
15	6.29	0.105	0.324	0.55	8.22
16	7.42	0.124	0.352	0.55	8.77
17	8.47	0.141	0.376	0.55	9.35
18	9.57	0.160	0.400	0.55	9.87
23	15.45	0.258	0.508	2.74	12.61
26	19.13	0.319	0.565	1.64	14.26
33	28.16	0.469	0.685	3.84	18.09
40	37.43	0.624	0.790	3.84	21.93
42	39.96	0.666	0.816	1.10	23.03
44	42.55	0.709	0.842	1.10	24.13
46	44.97	0.750	0.866	1.10	25.22

where W_2 and W_1 are the initial and final weights of the reservoir and SR_2 and SR_1 are the initial and final scale readings on the reservoir scale. The density of water, D, is taken as 1.0 g cm^{-3}.

Cumulative infiltration. Cumulative depth of infiltration, I, at time, t, is the total amount of water, Q, that has entered the soil at that time divided by the cross-sectional area ($=\Pi r^2$), where r is the radius of the disc. Cumulative infiltration is calculated by using the relation

$$I = Q / \Pi r^2 = (SR - SR_i)(RC) / \Pi r^2 \qquad (2)$$

where SR is the scale reading at the time of measurement, SR_i is the initial scale reading, and RC is the reservoir calibration.

Sorptivity. Sorptivity (S_0) is calculated from the I(t) measurements made during the early part of infiltration. To calculate S_0, plot $I = (Q / \Pi r^2)$ on the y-axis versus the square root of time ($t^{1/2}$) on the x-axis. The slope of the straight line portion is the sorptivity and has units of length/time$^{1/2}$ (Fig. 3).

Steady-state flow rate. This volumetric flow rate, V, is the slope of the linear section of the plot of cumulative infiltration, I, versus time (Fig. 4).

Hydraulic conductivity. The hydraulic conductivity of the soil at the potential at which the measurement is made is calculated using the equation described by White and Sully (1987b):

$$K_0 = V - 4bS_0^2/\Pi\, r\, (\theta_0 - \theta_n) \qquad (3)$$

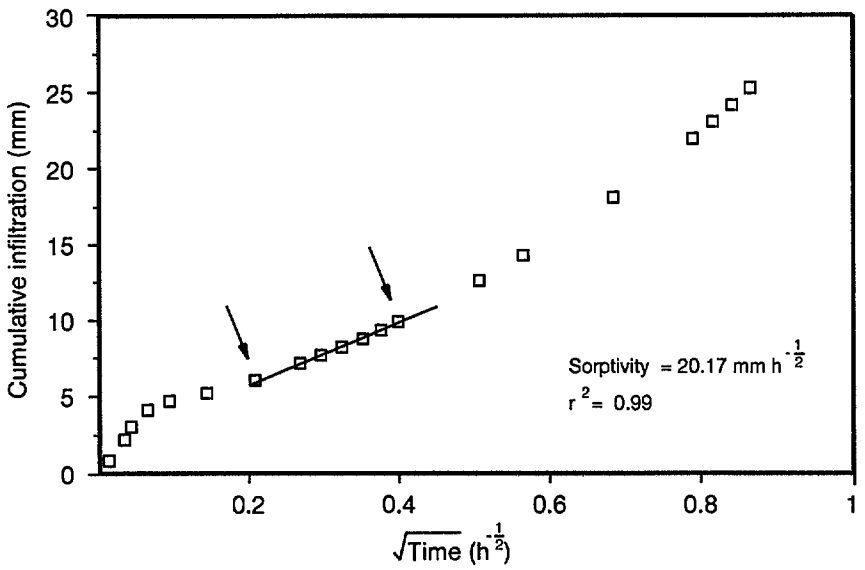

Figure 3 — Sorptivity measurement using a disc permeameter.

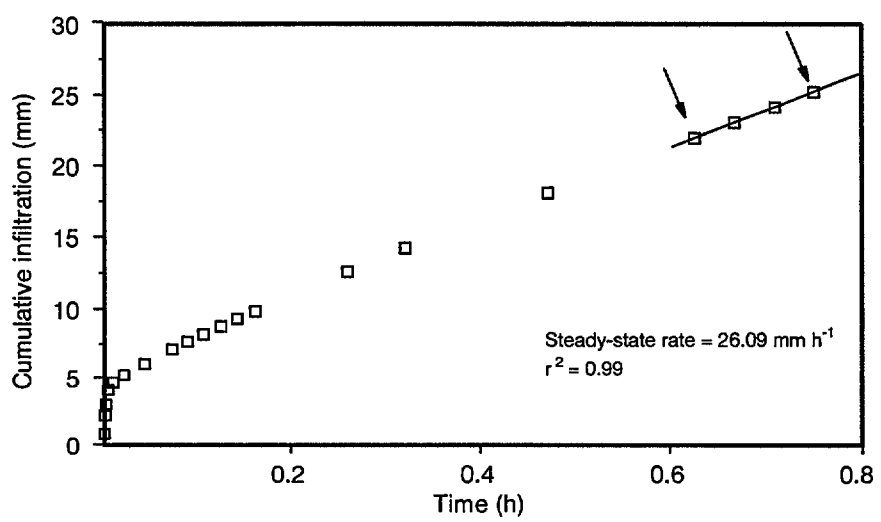

Figure 4 — Steady-state rate measurement using a disc permeameter.

where K_0 is the hydraulic conductivity at the moisture potential Ψ_0, at which moisture measurement is made, V is volumetric flow rate, r is disc radius, b is a dimensionless constant (and for most soils a mean value of 0.55 is taken), S_0 is the sorptivity, θ_0 and θ_n are the moisture contents at Ψ_0 and the initial moisture potential Ψ_n.

Macroscopic capillary length. The macroscopic capillary length, λ_c, is calculated using the relation given by White and Sully (1987a):

$$\lambda_c = bS_0^2 / (\theta_0 - \theta_n) K_0. \quad (4)$$

Mean pore size. The mean pore size λ_m is calculated by using the equation of White and Sully (1987a):

$$\lambda_m = 7.4 / \lambda_c. \quad (5)$$

Notes It is necessary to soak the membrane for at least 2 h before starting the measurements. The membrane should be checked periodically, as should the membrane-to-disc contact (because proper contact between disc and soil surface must be ensured). The moisture content measurements should be accurate, especially if the antecedent moisture content is high. With low tensions (e.g., –1 cm H_2O) the sand layer used to ensure good contact should be as thin as possible.

Rainfall Simulator Method

The traditional ring infiltrometer method produces infiltration characteristics under flooded conditions and is often confined to small areas. These measurements therefore do not represent the influence of natural rainfall on the infiltration behavior of soils. Rainfall simulators are now widely used to study the processes of infiltration, runoff, and erosion. Rainfall simulators can also be used to study the interactions between soil hydraulic processes and various soil management practices. There are several types of rainfall simulators/rainulators that vary in their complexity of construction and use (Bubenzer 1979). At ICRISAT we use a simple rainulator that can be moved across experimental or farmers' fields to make the replicated measurements needed to assess changes in soil hydrological parameters under different management options.

Equipment Rainfall simulator (Fig. 5) or rainulator (Fig. 6), metal sheets to make small plots, containers to measure rainfall, runoff collection system, stop-watch, measuring jars, water reservoir, pump and hoses, containers in which to collect samples.

Principle It is important to supply water to the soil surface in a form similar to natural rainstorms. The most important characteristics are raindrop size distribution, raindrop impact, and appropriate rainstorm intensities. A large number of simulators are described in the literature and readers are referred to such authors as Klute (1986), Perroux and White (1988), and Thomas and El-Swaify (1989) for details about construction. Hydrological measurements that can be made with simulators include runoff, infiltration, and erodibility.

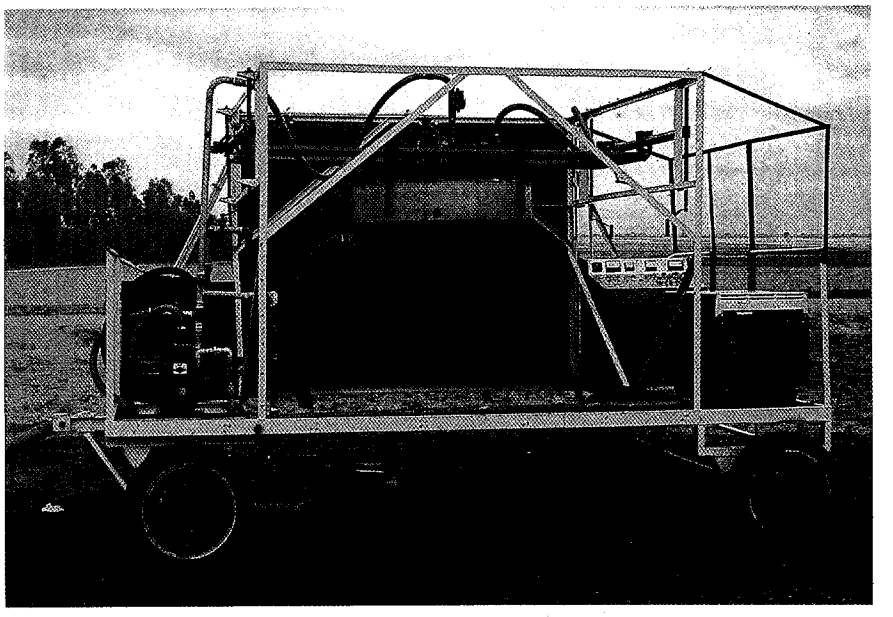

Figure 5 — Rainfall simulator for studying infiltration under simulated rainfall conditions.

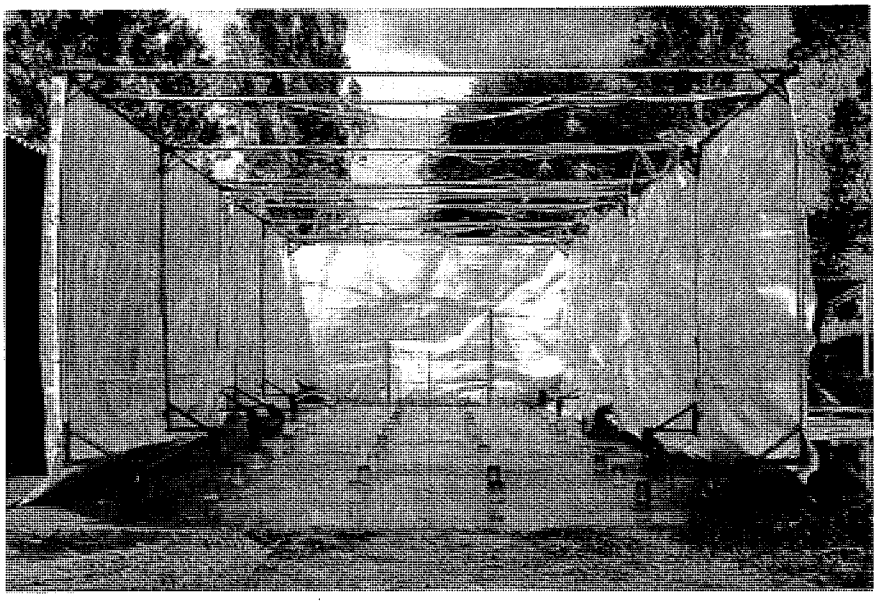

Figure 6 — Rainulator for studying infiltration under simulated rainfall conditions.

Procedure

1 Calibrate the rainfall simulator to determine the rate of application and evenness of rain distribution.

2 Measure the application rate by placing containers of known diameter on a grid inside the plot. A plot size of 1.5 x 1.5 m or 2.0 x 2.0 m is generally employed. It is always advisable to have as many bottles as possible in this area.

Table 4 — Sample datasheet for calibrating a rainfall simulator.

Date 22/09/95 **Nozzle type** 1.5 H30 **Pressure** 15 kg cm^{-2}
Run time 30 min **Bottle dia.** 10.7 cm

Bottle number (a)	Initial weight (g) (b)	Final weight (g) (c)	Volume of water (c–b) (cm^3) (d)	Intensity (X) = 60*(d)/ (Πr^2)*30 (cm h^{-1}) (e)
1	54.37	254.37	200	4.45
2	54.48	264.48	210	4.67
3	53.02	293.02	240	5.34
4	55.82	265.82	210	4.67
5	55.30	295.30	240	5.34
6	55.37	280.37	225	5.00
7	54.28	254.28	200	4.45
8	54.73	294.73	240	5.34
9	55.08	285.08	230	5.12
10	54.78	274.78	220	4.89
11	54.63	254.63	200	4.45
12	55.27	275.27	220	4.89

Mean volume = total volume (Σ d) / total number of bottles (n) = 220 mL.
Average intensity (μ) = Σ intensity / total number of bottles = 4.88 cm h^{-1}.
Standard deviation of intensity (SD) = $\sqrt{\Sigma(X-\mu)^2}$ = 0.35.
Coefficient of variation = 100 (SD / μ) = 7.17.
Coefficient of uniformity = 100[1–Abs (X–μ)/ (μ * n)] = 74.09.

3 Simulate rainfall for a fixed time of 30 min. Record the amount of water collected in the bottles by weighing, or with a measuring cylinder.

4 Calculate the rain intensity and coefficient of uniformity, as described under Calculations, and the sample datasheet in Table 4. For general use, an intensity of 50–60 mm h^{-1} with a uniformity coefficient of 80–85% is desirable.

5 Select a suitable site and record the surface conditions.

6 Prepare a plot of suitable dimensions using a metal frame. The frame should be driven into the soil to a depth of 5–10 cm. Avoid disturbing the soil inside the frame during insertion.

7 Install a runoff collection system at the lower end of the plot to direct runoff water into a tank equipped with either an automatic measuring system or a metering device.

Table 5 — Sample datasheet for measuring runoff and infiltration depth using a rainfall simulator.

Date	17/12/93	**Location**	RM 19B	**Soil type**	Alfisol
Texture	Sandy loam	**Surface cover**	Bare		
Intensity	88.80 mm h^{-1}	**Starting time**	0 min		
Ponding time	2.4 min	**Time of runoff initiation**	4.5 min		
Run time	45 min	**Area of plot**	2.25 m^2		

Time (min)	Time (h)	Volume of runoff water (cm^3)	Cumulative volume of water (cm^3)	Cumulative depth of runoff y (cm)	Depth of applied water x (cm)	Cumulative infiltration x–y (cm)
5	0.08	125	125	0.01	0.74	0.73
10	0.17	845	970	0.04	1.48	1.44
15	0.25	1625	2595	0.12	2.22	2.10
20	0.33	3000	5595	0.25	2.96	2.71
25	0.42	3565	9160	0.41	3.70	3.29
30	0.50	4065	13225	0.59	4.44	3.85
35	0.58	4375	17600	0.78	5.18	4.40
40	0.67	4380	21980	0.98	5.92	4.94
45	0.75	4390	26370	1.17	6.66	5.49

8 Apply rainfall with the simulator to the plot area at a predetermined intensity and measure the runoff.

9 Record the starting time, time to initiation of runoff, and runoff volume at regular intervals.

10 Calculate the infiltration. An example of the steps to be taken is given in the sample datasheet in Table 5.

Calculation Table 4 summarizes the steps to take in analyzing the calibration measurements for intensity and in determining rainfall uniformity.

The difference between the water application rate and runoff rate gives the infiltration rate. Table 5 helps in recording the necessary observations. Plot the difference between the applied water and runoff as a function of time. The slope of the curve gives the water infiltration rate.

Notes Rainfall simulators do not eliminate the need for natural rainfall experiments. Simulators are very useful in studying the rainfall-runoff processes rapidly under controlled situations. The major drawbacks in the use of rainfall simulators are the cost and time required to construct a simulator, difficulty in simulating natural rainfall characteristics, and small area to which rainfall can be applied. A researcher who considers using a rainfall simulator should carefully consider his/her research objectives and be aware of the limitations posed by simulators.

References

Bubenzer, G.D. 1979. Inventory of rainfall simulators. Proceedings of the Rainfall Simulator Workshop. USDA-SEA, ARS-W 10:120–130.

Klute, A. (ed.) 1986. Methods of soil analysis. Part 1: Physical and mineralogical methods. (2nd edn.) Madison, WI, USA: American Society of Agronomy and Soil Science Society of America. 1188 pp.

Perroux, K.M., and **White, I.** 1988. Designs for disc permeameters. Soil Science Society of America Journal 52:1205–1215.

Thomas, N.P., and **El-Swaify, S.A.** 1989. Construction and calibration of a rainfall simulator. Journal of Agricultural Engineering Research 43:1–9.

White, I. and **Sully, M.J.** 1987a. Macroscopic and microscopic capillary length and time scales from field infiltration. Water Resources Research 23:1514–1522.

White, I., and **Sully, M.J.** 1987b. CSIRO disc permeameter: instruction manual. Canberra, Australia: CSIRO Division of Environmental Mechanics. 31 pp.

Runoff and Soil Loss Measurement

P Pathak, K P C Rao, and Shriniwas Sharma

Introduction

Various methods are available for measuring runoff and soil loss depending upon the specific needs of the location. Each method has its own characteristics that favor its adoption under certain conditions of measurements and limit its use under other sets of conditions. Any method selected should measure runoff and soil loss accurately for low, medium, and high rates of discharge. This section provides information on some commonly used runoff and soil loss measuring devices, their constructional details, installation, and limitations.

Runoff Measurement

Precalibrated devices for measuring runoff are most commonly used at research stations because of their high accuracy. The two most commonly used are H-type flumes and weirs.

H-type flumes

Presently, three types of flumes – HS, H, and HL – are available for small, medium-, and high-discharge rates, respectively. They have different specifications to suit various ranges of water flow. The shape of flume provides the following distinct advantages that favor its use under a variety of flow conditions (USDA 1979):

1 The increase of throat opening with the rise of stage facilitates accurate measurement of both low and high flow of water.

2 The converging section of flume makes it self-cleaning because of increased velocity. Consequently, the flume is suitable for measuring flows having sediment in suspension and low bed-loads.

3 It is simple to construct, rigid and stable in operation, and requires minimal maintenance for retaining its rating.

4 Its installation is simple and is generally not affected by the steepness of the channel gradient.

Flumes are basically designed for free-flow conditions and are therefore not recommended for submerged-flow conditions. Free-flow occurs when flow downstream of the measuring structure does not affect flow conditions within and in the upstream sections of the structure, i.e., there is sufficient fall near the outlet of the structure. On the other hand, submerged flow occurs when downstream flow strongly influences that within and at the upstream section of the measuring structure. Flumes are also not recommended for flows carrying excessive amounts of coarse bed-loads.

HS-flume These flumes are designed to measure small flow rates ranging from 0.0014 to 0.0227 $m^3 s^{-1}$ (0.05 to 0.8 $ft^3 s^{-1}$) with a high accuracy. Details

of dimensions, capacities, and construction tolerances of the flume are shown in Figure 1. Construction details are as given for H-flumes below.

H-flumes

H-flumes are used where the maximum runoff ranges from 0.009 to 0.85 $m^3 s^{-1}$ (0.3 to 30 $ft^3 s^{-1}$). The dimensions and flow capacities are shown in Figure 2. Table 1 gives the ratings for H-flumes of various sizes. Construction specifications are as follows (USDA 1979; Pathak et. al. 1981):

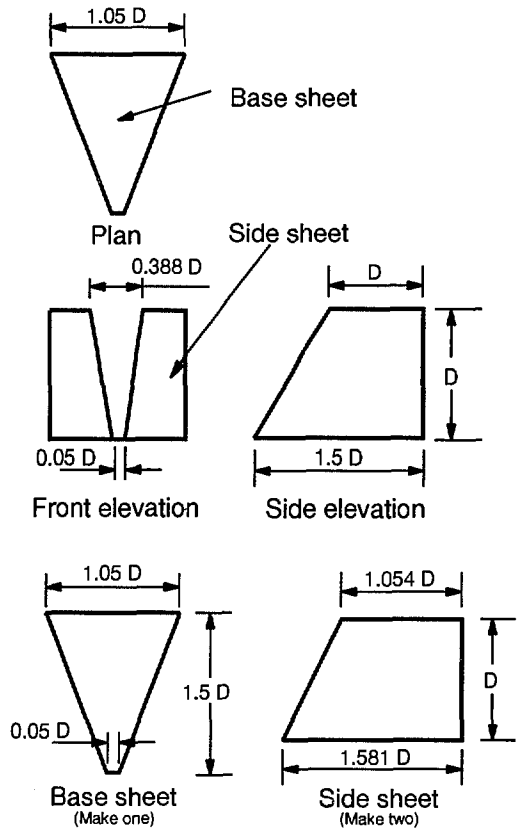

Proportions of the type HS-flume

Approximate capacities	
Depth - D (ft)	Capacity ($ft^3 s^{-1}$)
0.4	0.085
0.6	0.230
0.8	0.470
1.0	0.820

Figure 1 — Dimensions, capacities, and construction tolerances of the HS-flume.

1 Prepare drawings, using the proportional dimensions shown in Figure 2. (For HS-flumes use Fig. 1.)

2 If possible use only good-quality materials in constructing the flumes.

3 Use mild steel sheets (3.25 mm or 1/8 inch thick) without any distortion. Make all joints watertight and strong.

4 Make the vertical sides of the flume from one sheet. The bottom plate must not contain more than one joint and no portion of this joint should lie near to the outlet opening. Any necessary joint in the bottom plate must be transverse to the longitudinal axis of the flume and must be made in such a way that the joint is substantially flush. Make all dimensions for which tolerances are not indicated on the drawings within 0.65 cm or 1/4 inch of those given on the drawings.

5 Cut all plate edges straight and sharp. Do not warp the plates or distort them by cutting.

6 Clamp the plates rigidly in position and get the proper dimensions and slopes before making the final connections. Make the side plates perpendicular to the bottom of the flume. All cross-sections of the flume must be symmetrical about the longitudinal axis. No projections should occur on the inside of the flume.

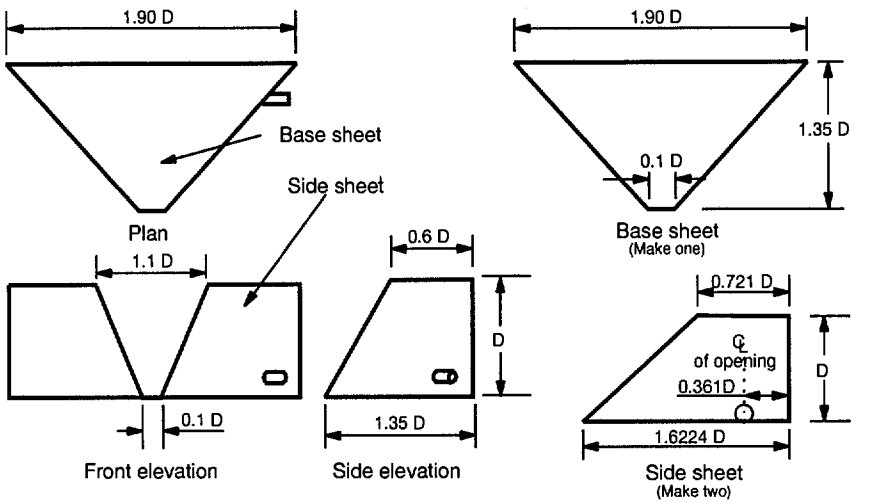

Proportions of the type H-flume

Approximate capacities	
Depth - D (ft)	Capacity (ft^3s^{-1})
0.50	0.3
0.75	1-
1.00	2
1.50	5+
2.00	11
2.50	19
3.00	30+

Flume Depth - D	Outlet opening dimension Tolerances		
	Bottom width	Top width	Depth
(ft)	(in)	(in)	(in)
0.50	0.02	0.1	0.05
0.75	0.02	0.1	0.05
1.00	0.02	0.1	0.05
1.50	0.03	0.1	0.05
2.00	0.03	0.1	0.05
2.50	0.03	0.1	0.05
3.00	0.03	0.1	0.05
4.00	0.05	0.1	0.10

Note : For flumes less than 1 ft deep, the length of flume is made greater than 1.35 so that the float may be attached.

Figure 2 — Dimensions, capacities, and construction tolerances of the H-flume.

Installation of HS- and H-flumes

When flumes are installed, the approach boxes should, whenever possible, be depressed below the natural ground surface (see Fig. 3). Where the watershed or plot slope is small and the flow dispersed, gutters may be provided to collect the runoff at the bottom of the slope and channel it into the approach box.

Metal flumes should be fixed to the concrete approach (Figs 4 and 5). The concrete cut-off wall should extend below the concrete approach at the upstream face of the flume to provide substantial support and to prevent seepage below the flume. The flume floor must be level. If silting is a problem, a 1 in 8 sloping false floor can be set to concentrate low flows and thereby reduce silting. The difference in calibration for a flume with a flat floor and that with a sloping false floor is less than 1%.

Submergence effect on H-flumes

Flumes should be installed with free outfall or no submergence wherever possible. If submergence occurs, the free discharge head (H) can be computed by using the following equation (presented in nonmetric units to be consistent with those given in USDA 1979):

Table 1 — Rating tables for H-flume: discharge in $ft^3 s^{-1}$(USDA 1979).

					0.5-ft flume					
Head (ft)	**0.00**	**0.01**	**0.02**	**0.03**	**0.04**	**0.05**	**0.06**	**0.07**	**0.08**	**0.09**
0	0	Trace	0.0004	0.0009	0.0016	0.0024	0.0035	0.0047	0.0063	0.0080
0.1	0.0101	0.0122	0.0146	0.0173	0.0202	0.0233	0.0267	0.0304	0.0343	0.0385
0.2	0.0431	0.0479	0.0530	0.0585	0.0643	0.0704	0.0767	0.0834	0.0905	0.0979
0.3	0.1057	0.1139	0.1224	0.1314	0.1407	0.1505	0.1607	0.1713	0.1823	0.1938
0.4	0.205	0.217	0.230	0.244	0.257	0.271	0.285	0.300	0.315	0.331

					1.0-ft flume					
Head (ft)	**0.00**	**0.01**	**0.02**	**0.03**	**0.04**	**0.05**	**0.06**	**0.07**	**0.08**	**0.09**
0	0	Trace	0.0007	0.0017	0.0027	0.0040	0.0056	0.0075	0.0097	0.0122
0.1	0.0150	0.0179	0.0211	0.0246	0.0284	0.0324	0.0367	0.0413	0.0462	0.0515
0.2	0.0571	0.0630	0.0692	0.0758	0.0827	0.0900	0.0976	0.1055	0.1138	0.1226
0.3	0.132	0.141	0.151	0.161	0.172	0.183	0.194	0.206	0.218	0.231
0.4	0.244	0.257	0.271	0.285	0.300	0.315	0.331	0.347	0.364	0.381
0.5	0.398	0.416	0.434	0.453	0.472	0.492	0.512	0.533	0.554	0.576
0.6	0.598	0.621	0.644	0.668	0.692	0.717	0.743	0.769	0.796	0.823
0.7	0.851	0.880	0.909	0.939	0.969	1.000	1.031	1.063	1.096	1.129
0.8	1.16	1.20	1.23	1.27	1.30	1.34	1.38	1.41	1.45	1.49
0.9	1.53	1.57	1.61	1.66	1.70	1.74	1.78	1.83	1.87	1.92

Continued

Table 1 – continued

	2.0-ft flume									
Head (ft)	**0.00**	**0.01**	**0.02**	**0.03**	**0.04**	**0.05**	**0.06**	**0.07**	**0.08**	**0.09**
0	0	Trace	0.0014	0.0031	0.0050	0.0073	0.0100	0.0130	0.0166	0.0205
0.1	0.0248	0.0293	0.0341	0.0392	0.0447	0.0505	0.0567	0.0632	0.0701	0.0774
0.2	0.0850	0.0930	0.1015	0.1103	0.1195	0.1290	0.1390	0.1494	0.1602	0.1714
0.3	0.183	0.195	0.207	0.220	0.234	0.248	0.262	0.276	0.291	0.307
0.4	0.323	0.339	0.356	0.374	0.392	0.410	0.429	0.448	0.468	0.488
0.5	0.509	0.530	0.552	0.574	0.597	0.620	0.644	0.668	0.693	0.719
0.6	0.745	0.771	0.798	0.826	0.854	0.882	0.911	0.941	0.971	1.002
0.7	1.03	1.07	1.10	1.13	1.16	1.20	1.23	1.27	1.30	1.34
0.8	1.38	1.42	1.46	1.49	1.53	1.57	1.62	1.66	1.70	1.74
0.9	1.78	1.83	1.87	1.92	1.96	2.01	2.06	2.10	2.15	2.20
1.0	2.25	2.30	2.35	2.40	2.45	2.51	2.56	2.62	2.67	2.73
1.1	2.78	2.84	2.90	2.96	3.02	3.08	3.14	3.20	3.26	3.32
1.2	3.38	3.45	3.51	3.58	3.65	3.71	3.78	3.85	3.92	3.99
1.3	4.06	4.13	4.20	4.28	4.35	4.43	4.50	4.58	4.66	4.74
1.4	4.82	4.90	4.98	5.06	5.14	5.23	5.31	5.40	5.48	5.57
1.5	5.65	5.74	5.83	5.92	6.01	6.11	6.20	6.29	6.38	6.48
1.6	6.58	6.67	6.77	6.87	6.97	7.07	7.17	7.27	7.37	7.47
1.7	7.58	7.68	7.79	7.90	8.00	8.11	8.22	8.33	8.44	8.56
1.8	8.67	8.78	8.90	9.01	9.13	9.24	9.36	9.48	9.60	9.72
1.9	9.85	9.97	10.09	10.21	10.34	10.47	10.60	10.72	10.85	10.98

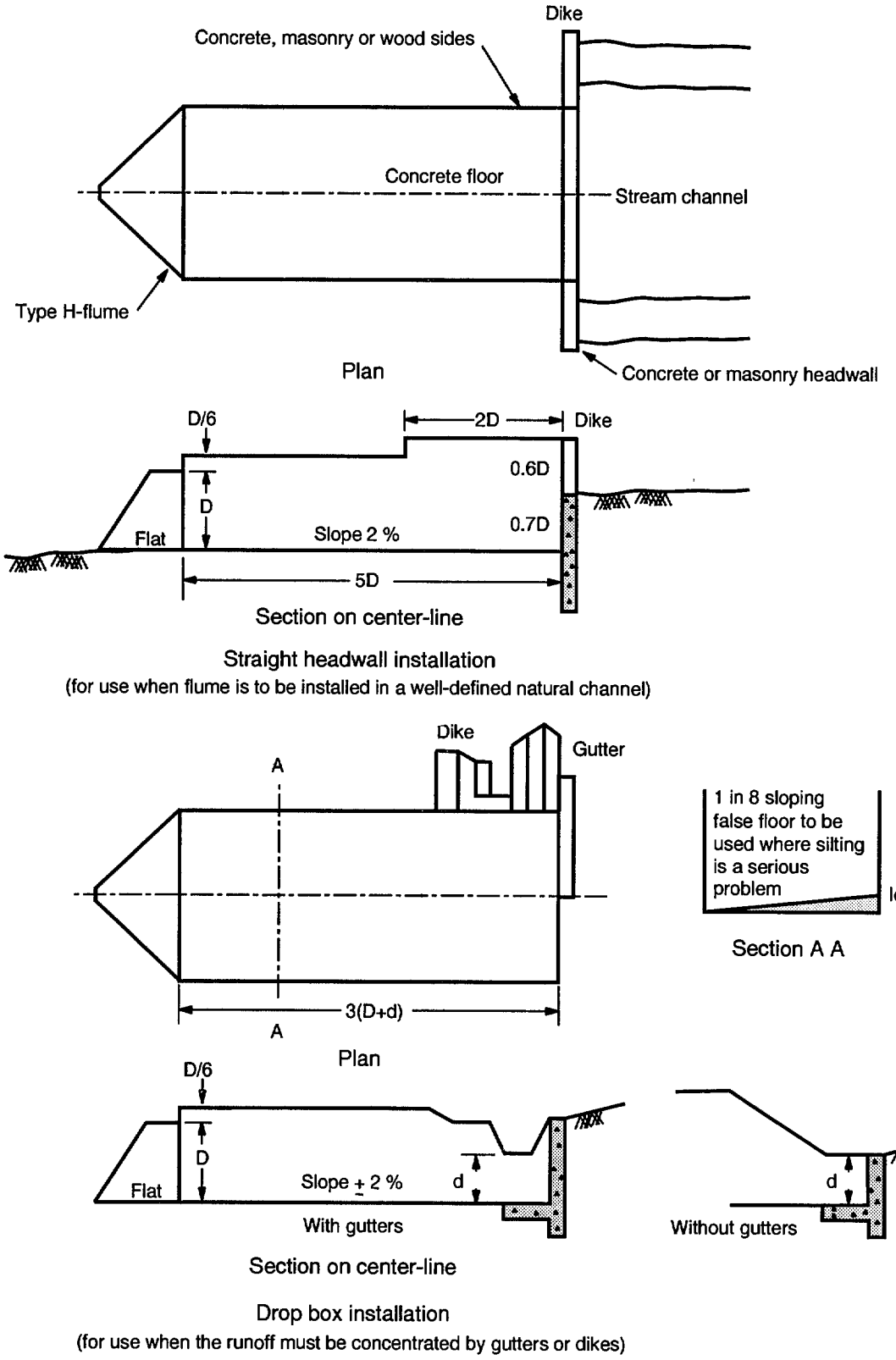

Figure 3 — Plans showing straight headwall and drop-box installations of HS- or H-flumes (USDA 1979).

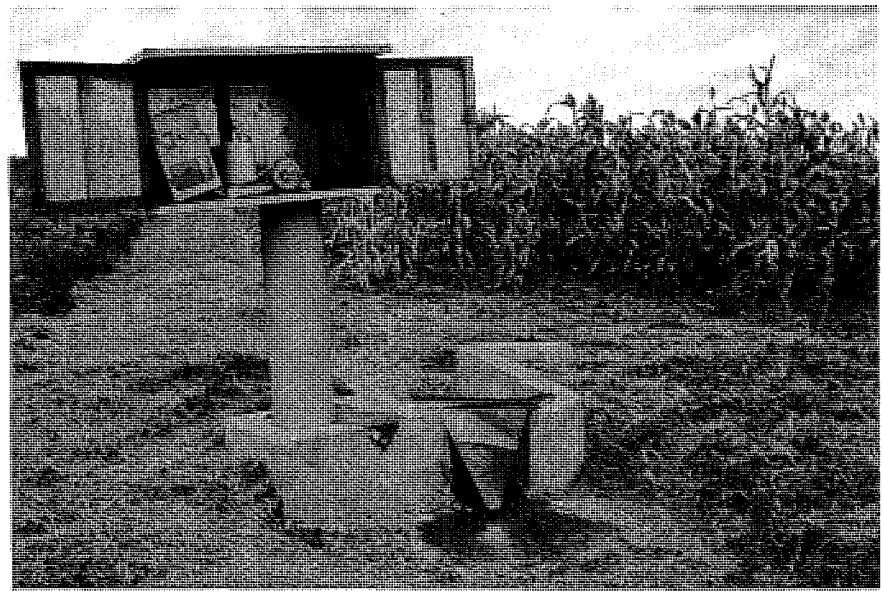

Figure 4 — H-flume attached to a stilling well and connected to a drum-type recorder for measuring runoff.

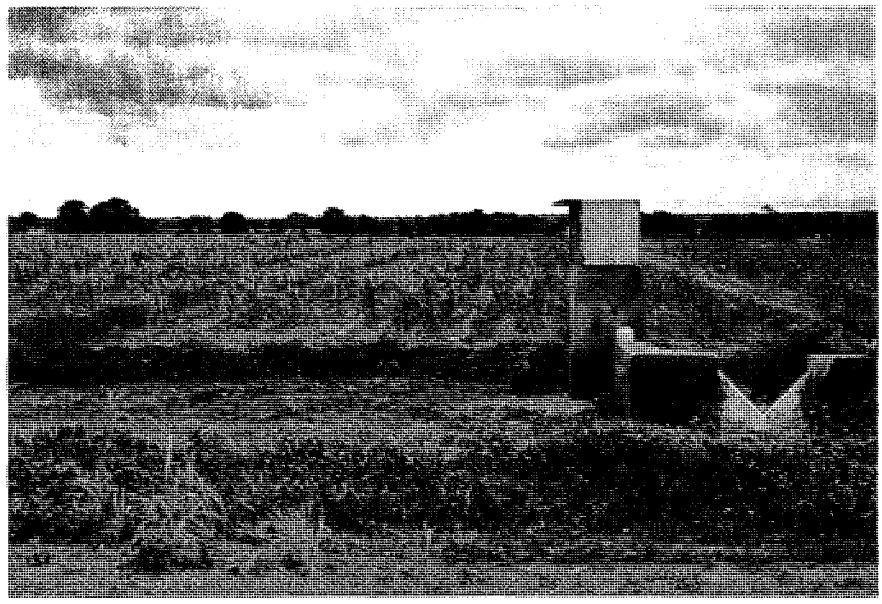

Figure 5 — A V-notch attached to a stilling well and connected to a drum-type recorder for measuring runoff.

$$H = d_1/\{1 + 0.00175\ [\exp\ (d_2/d_1)^{5.44}]\}$$

where H is the free flow head (in ft), d_1 is the actual head with submergence (in ft), d_2 is the tail water depth above flume zero head, and $0.15 < d_2/d_1 < 0.90$.

Weirs

Weirs are the simplest, and reliable, structures that can be used in many situations to measure runoff. They can be used most effectively where there is a fall of about 18 cm (or 0.6 ft) or more in the waterway, and also where submergence on the upstream section is not undesirable.

They are generally classified on the basis of width of the crest and shape of the weir opening. In this section, we describe one of the most commonly used weirs.

Sharp-crested triangular weir or V-notch weirs

V-notch weirs are often used for measuring runoff from small plots (Fig. 5). They have been accurately rated in the laboratory regarding crest characteristics, their placement in the channel or waterway, the approach waterway, flow conditions, and the relation expressed in the form of discharge formulae. Generally, a weir crest consists of a metal blade with a sharp edge. The distinct advantage of the triangular weir is its suitability for measuring high as well as low flows with a high degree of accuracy. The most commonly used triangular weirs have 90° and 120° V-notches.

Details of a 37.5-cm (or 1.25 ft) 90° V-notch are shown in Figure 6, and Table 2 gives the related ratings. The weir blades are normally constructed of angle iron 89 x 89 x 13 mm, or noncorrodible metal plate 6 mm (0.25 in) thick. The installation and construction of the approach channel should strictly follow the instructions below.

Setting V-notch weirs

The following conditions are necessary for accurate measurement of flow with sharp-crested V-notch weirs (USDA 1979; Pathak et al. 1981):

1 The thickness of the weir blade should not be more than 6 mm.

2 The upstream corners of the notch must be sharp. They should be machined or filed perpendicular to the upstream face, free of scratches and not smoothed off with abrasive cloth or paper. Knife edges should be avoided because they are difficult to maintain.

3 The downstream edges of the notch should be relieved by chamfering if the plate is thicker than the prescribed crest width (1–2 mm). The chamfer should be at an angle of 45° or more to the surface of the crest.

4 The distance of the lowest crest point from the bottom of the approach channel (weir pool) should preferably not be less than twice the depth of water above the lowest crest point, and in no case less than 30 cm.

5 The distance from the sides of the weir to the sides of the approach channel should preferably be no less than twice the depth of water above the lowest crest point, and never less than 30 cm.

6 The overflow sheet (nappe) should touch only the upstream edges of the crest.

7 Measurement of the head on the weir should be taken as the difference in elevation between the lowest crest point and water surface at a point upstream from the weir at a distance that is four times the maximum head on the crest.

8 The cross-sectional area of the approach channel should be at least 8 times that of the overflow sheet at the crest for a distance that is 15 times the depth of the flow and, if it is less, then the head should be corrected by using an appropriate method.

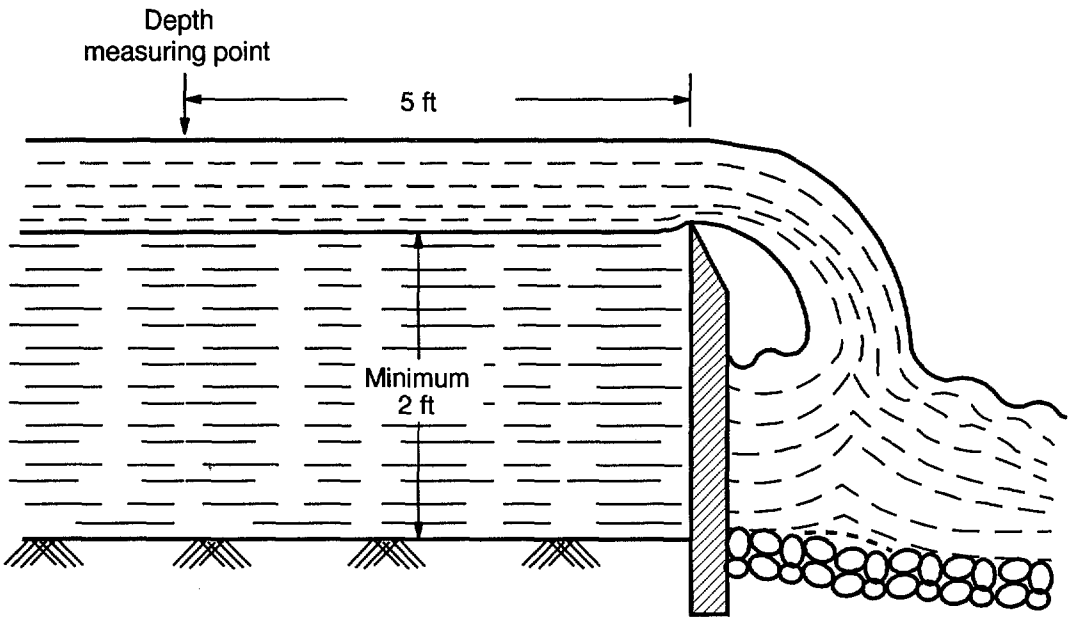

Some installation conditions for 1.25-ft 90° V-notch weir

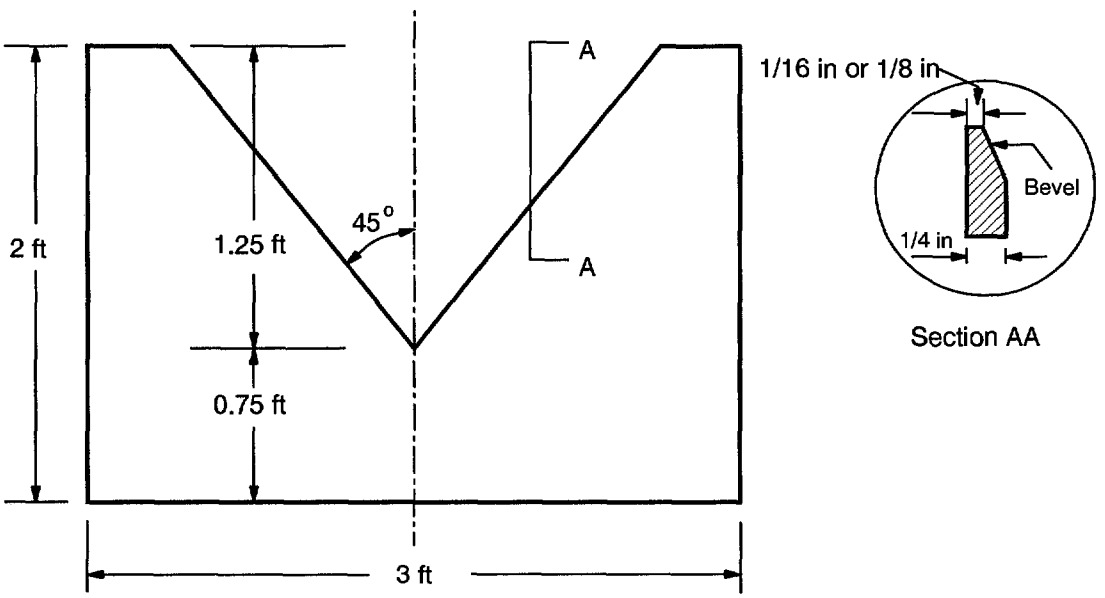

Metal plate dimensions

Figure 6 — Detail plan and dimensions for a l.25-ft 90° V-notch weir (USDA 1979).

Table 2 — Rating table for a 90° sharp-crested V-notch: discharge in $ft^3 s^{-1}$ (USDA 1979).

Head (ft)	0.00	0.01	0.02	0.03	0.04	0.05	0.06	0.07	0.08	0.09
0	0	0.0005	0.001	0.0015	0.002	0.003	0.004	0.005	0.006	0.007
0.10	0.008	0.010	0.012	0.015	0.018	0.022	0.026	0.030	0.035	0.040
0.20	0.046	0.052	0.058	0.065	0.072	0.080	0.088	0.096	0.106	0.115
0.30	0.125	0.136	0.147	0.159	0.171	0.184	0.197	0.211	0.226	0.240
0.40	0.256	0.272	0.289	0.306	0.324	0.343	0.362	0.383	0.403	0.424
0.50	0.445	0.468	0.491	0.515	0.539	0.564	0.590	0.617	0.644	0.672
0.60	0.700	0.730	0.760	0.790	0.822	0.854	0.887	0.921	0.955	0.991
0.70	1.03	1.06	1.10	1.14	1.18	1.22	1.26	1.30	1.34	1.39
0.80	1.43	1.48	1.52	1.57	1.61	1.66	1.71	1.76	1.81	1.86
0.90	1.92	1.97	2.02	2.08	2.13	2.19	2.25	2.31	2.37	2.43
1.00	2.49	2.55	2.61	2.68	2.74	2.81	2.87	2.94	3.01	3.08
1.10	3.15	3.22	3.30	3.37	3.44	3.52	3.59	3.67	3.75	3.83
1.20	3.91	3.99	4.07	4.16	4.24	4.33				

Water-Level Recorders and their Installation

Accurate determination of runoff volume, peak runoff rate, and other related information from small areas invariably requires the continuous recording of the water level. Stage-level recorders are commonly used for this purpose. A stage-level recorder produces a graphic record of the stage of flow over a control with respect to time, and it is accepted as very reliable.

Many types of stage-level recorders are commercially available. The drum type (Fig. 7) is most commonly used in runoff studies on small watersheds and plots, where visits to the site are scheduled daily, or sometimes weekly. FW-1, developed by J P Freixz and Sons, Baltimore, Maryland, USA, are used extensively by agricultural research institutions. In India, firms at Dehra Dun and Pune manufacture the horizontal-drum type stage-level recorders.

5-FW-1 stage-level recorders

This type of recorder mechanically converts the vertical movement of a counter-weighted float resting on the surface of a liquid into a curvilinear, inked record of the height of the surface of the liquid

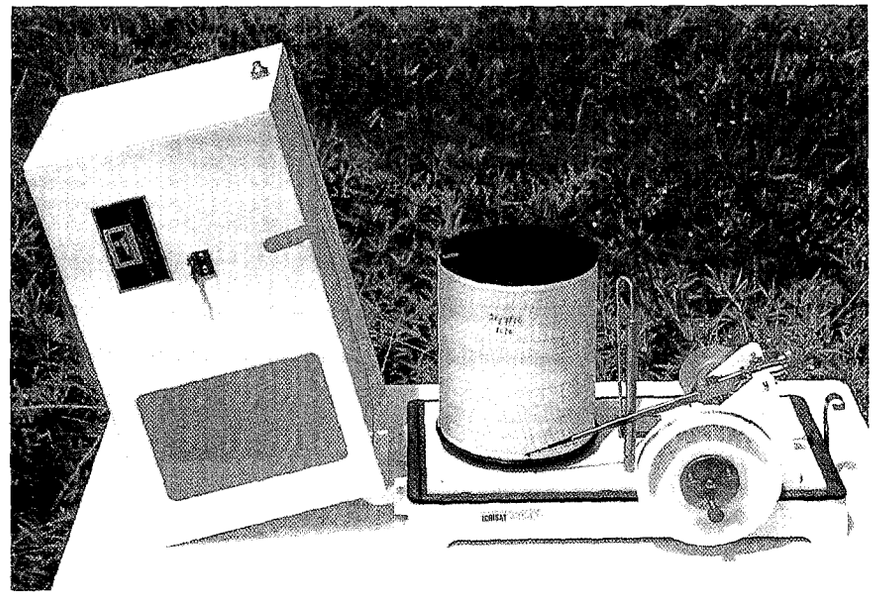

Figure 7 — A drum-type recorder for the continuous recording of runoff.

relative to a datum plane and with respect to time. The time element consists of a weekly winding spring-driven clock supported on a vertical shaft to which the chart drum is firmly secured vertically (Fig. 7). The gauge element consists of a float and counterweight-graduated float pulley. The movement of the float is transmitted to a cam and, with the help of a set of gears, it moves the pen on the chart in a vertical direction. Some recorders have a reversing mechanism and can therefore record an unlimited range of flow depth. Detailed information about operation and maintenance is given in an instruction book that is normally supplied with the equipment.

Installation of stage-level recorders

The gauging site equipped with a stage-level recorder has three essential components: a stilling well, intakes, and recorder shelter (see Figs 4 and 5) (Pathak et al. 1981; USDA 1979).

Stilling well

The well over which the stage-level recorder is installed is essentially a stilling well. Inside it the float and counterweight of the recorder rise and fall in response to fluctuations in the water level without being affected by surges or waves that might result in inaccurate measurements. Regardless of the method used, the well should be located to one side of the waterway (so that it does not interfere with the flow pattern over the spillway) and, if possible, near the measuring flow section of the precalibrated structure. The size of the well will depend upon the required stability, depth, type of material, and space required by the float and the counterweight.

Constructional details of a brick masonry well are shown in Figure 8. Instead of brick masonry, galvanized iron and concrete pipes can also be used in constructing the well (as in Fig. 4) (Pathak et al. 1981). They should be built on solid foundations with waterproof bases. In swelling clay soils, e.g., Vertisols, larger foundations are needed. The following should be taken into consideration when stilling wells are constructed:

1 The bottom of the well should be at least 20 cm lower than the lowest intake.

2 The portion of the stilling well underneath the lowest intake must be watertight.

3 The inside diameter of the well should not be less than the sum of the diameter of recorder pulley, half the diameter of the float, half the diameter of the counterweight, and 7.0 cm.

4 The inside surface of the well should be smoothed, either by plastering or by lining with a thin metal sheet.

5 The depth of the well should be about 20 cm more than double of the maximum expected head. This provides a full range of scale and avoids the danger of submerging the counterweight of the float.

6 The size of the well should not be too large because, if it is large, there may be a lag between the rise or fall of water level in the well.

Intakes

The connection between the stilling well and the precalibrated structure is accomplished by means of intake pipes. These intakes can be one or more galvanized pipes or several 2.5-cm diameter holes. A general guide to the size and number of intakes required is that their total cross-sectional area should be at least 1% of the cross-sectional area of the stilling well. In general, more than one intake should be provided at different elevations. This gives two distinct advantages. First, it safeguards against clogging of the intake by sediment. And, secondly, it facilitates better connection with the water as it rises or falls.

Recorder chart annotation and maintenance

The regular keeping of notes on instrument operation is vital to data tabulation, especially when appreciable lag occurs between obtaining the record and tabulating data. Notes on prevailing conditions are vital to data analysis and interpretation (USDA 1979).

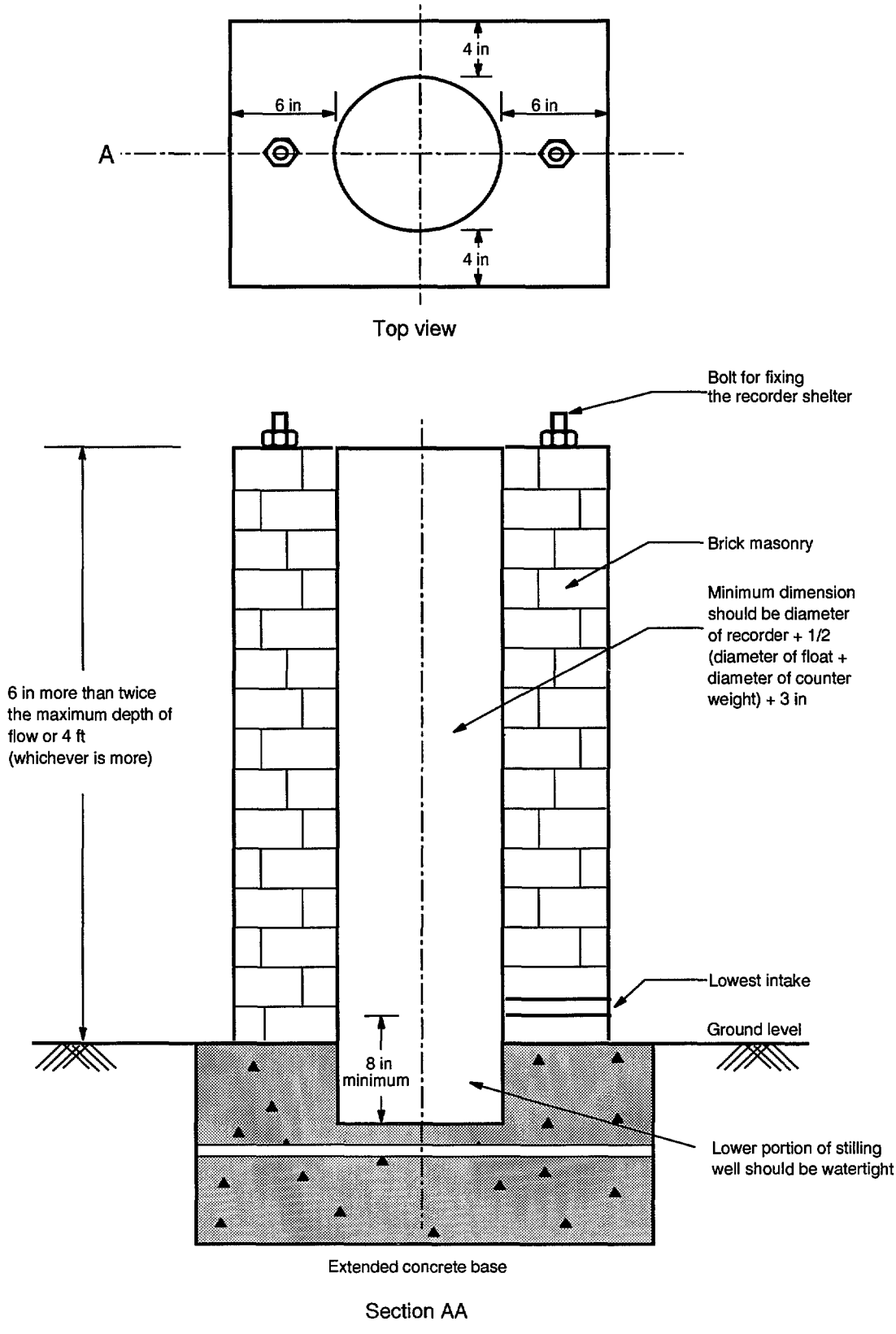

Figure 8 — Details of a stilling well (Pathak et al. 1981).

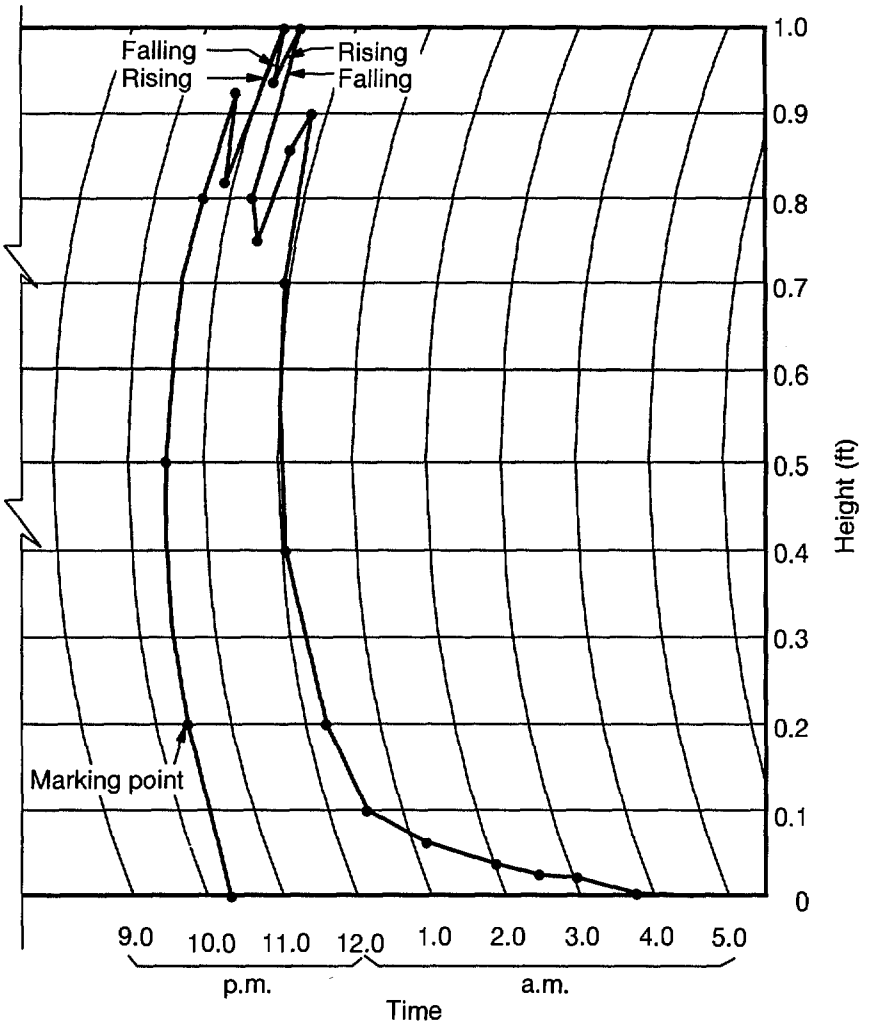

Station ...BW 1 Watershed (2-ft Parshal Flume).....

Beginning Date ..... Time ..... Staff gauge reading

Ending Date 24.8.79..... Time ..... Staff gauge reading

Stage Height Ratio 5" of Chart = ... Water

Chart Changed By T. Somaiah..... Remarks .....

Figure 9 — Example of a runoff hydrograph (BW1 Watershed, ICRISAT Asia Center, 24/08/79).

Notes made on charts should include watershed - plot number, chart number, removal time, corrections on time, stage, notch base-level, and lowest intake level (see example in Fig. 9). Charts should be numbered and dated to show that the record is continuous, although no runoff may have occurred during the period covered by some charts.

For charts covering such no-runoff periods, record only the chart number and dates. No other notes are required because the charts' main purpose is to show continuity of records.

For charts covering periods during which runoff occurred, use a light pencil for writing all notes, and proceed as follows:

1 Write chart number and dates in the space provided.

2 Enter dates, times of placement, and removal.

3 Note the level of spillway crest and lowest intake.

4 Check monthly to see how placement and removal marks agree with the watch time. If they do not agree within 10 min, apply a time correction. To determine this correction, assume a straight-line variation between placement or inspection and removal. For example, if at the time of removal of the chart the following observations were taken:

   a) the time difference between the watch and the recorder time is 40 min or less;

   b) the total period for which chart was kept on recorder is 30 h; or

   c) the total period of runoff is 6 h;

   then the correction to be applied to the runoff period will be 40 x 6 / 30 = 8 min. Eight minutes should therefore be added to the original 6 h (i.e., total runoff period).

5 Check if there are any discrepancies between the chart line and the index pointer. Check also for failure of the pen to reverse at the edges of the printed portion of the chart. If the pen reverses below the limits of the printed chart at about the same extent at both the upper and lower reversals, apply a constant correction to each traverse. This correction for the traverse upward across the chart is positive, whereas that for the downward traverse is negative. Where the lower reversal is correct but the upper reversal falls short, a graduated correction is required. Since tabulations are to be made only to the nearest 0.3 cm, a graduated correction would not be feasible; thus a constant correction should be applied for a given range in stage. If the upper reversal falls short by 0.3 cm, the correction should be applied only to the upper half of the chart. If the upper reversal is 0.6 cm short, a correction of 0.01 should be applied from 0.25 to 0.75, and 0.02 applied from 0.75 to 1.25 (USDA 1979; Pathak et al. 1981).

Maintenance of flumes and stilling well

The structure and upstream pond area must be kept free of weeds and trash. Sediment must be removed as it accumulates. The level of the crest should be checked at least yearly to ensure that the gauge is on zero. The crest should be examined for nicks or dents that might reduce accuracy of measurement.

If constructed properly, stilling wells will require little servicing. The well and intake pipes should be free of silt. When the well is cleaned, or debris is removed from the intake pipe, the recorder pens should be raised from the chart because a surge in the well may cause excess ink on the chart to soften the paper, thus causing the pen to tear it. After every major flow event, intakes should be checked and, if necessary, the silted soil removed.

Data reduction and processing

The runoff chart obtained from a stage-level recorder gives a continuous record of depth of flow with respect to a reference level, and as a function of time. This stage graph is subsequently processed to obtain the runoff rates and volumes that are later used for analysis. The runoff information used in agricultural hydrologic research experiments normally comprises: (a) number of runoff events; (b) runoff volume; (c) peak runoff rates; and (d) flow durations and time to peak.

Chart annotation errors, and corrections

Special attention should be given to charts as soon as they are removed from the recorder (USDA 1979; Pathak et al. 1981). Check and note on the analog trace such abnormalities as faulty records due to clock stoppage, malfunction of the pen, debris lodged on the control, or clogging of intakes. By comparison with rainfall and runoff records from nearby stations, adjust the chart to represent the true record as closely as possible.

Marking and tabulation

This process consists of marking all the breaks of the hydrographs where the slope changes. The rate of change of flow between two adjacent marks is assumed to be uniform, and so that segment of the hydrograph is considered to be straight. The number of points will depend upon the fluctuations of stages, which will obviously be more when there have been flash flows. The tendency to take a minimum number of points to reduce labor in computation should not be allowed to impair the accuracy of the data. And a uniform time interval is generally not suitable for small watersheds.

Marking and tabulating a chart are illustrated by the example given in Figure 9, based on the following data:

Watershed no.: BW1 Area : 3.45 ha

Runoff measuring device: H-flume H-flume size: 60 cm (2 ft)

Stage recorder: FW-1 type (Belfort Company)

Stage ratio used: 5:12

Time scale used: one revolution in 24 h.

The steps to be taken in marking and tabulating runoff charts are the following:

1 Complete the information on the top of a sheet as shown in Table 3.

2 Complete the chart annotation and record the necessary information.

3 Mark the recorded hydrographs wherever the slope changes as shown in Figure 9 and add some intermediate points. The total number of points made on this chart is 23.

4 Note the times at each of the points in column 1 (see Table 3).

5 Record the corresponding stage of flow in column 3 of Table 3 and repeat until all the points have been tabulated. In an FW-1 type recorder with 5:12 gauge scale ratio, each smallest division on the vertical scale represents 0.6 cm (or 0.02 ft). Therefore, the total number of small vertical divisions is counted and then multiplied by 0.6 cm (or 0.02 ft) to get the actual depth of flow at the various points.

Table 3 — Sample computation of runoff from runoff hydrograph.

Time	Time interval (min)	Gauge height (ft)	Discharge from rating table ($ft^3\ s^{-1}$)	Average discharge for time interval ($ft^3\ s^{-1}$)	Runoff: For time interval (ft^3)	Runoff: Accumulated in (ft^3)	Runoff: Accumulated in (m^3)
7.52							
7.56	4	0.20	0.09	0.043	10.20	10.20	0.29
8.00	4	0.50	0.51	0.297	71.28	81.48	2.31
8.02	2	0.80	1.38	0.945	113.34	194.82	5.51
8.04	2	0.92	1.87	1.625	195.00	389.82	11.04
8.12	8	0.82	1.46	1.665	799.20	1189.02	33.65
8.18	6	1.00	2.25	1.855	667.80	1856.82	52.55
8.21	3	1.06	2.56	2.405	432.90	2289.72	64.80
8.24	3	1.00	2.25	2.405	432.90	2722.62	77.05
8.28	4	0.80	1.38	1.815	435.60	3158.22	89.38
8.38	10	0.75	1.20	1.290	774.00	3932.22	111.28
8.44	6	0.86	1.62	1.410	507.60	4439.82	125.65
8.48	4	0.90	1.78	1.700	408.00	4847.82	137.19
8.54	6	0.70	1.03	1.405	505.80	5353.62	151.51
9.02	8	0.40	0.32	0.677	324.96	5678.58	160.70
9.10	8	0.20	0.085	0.204	97.92	5776.50	163.48
9.20	10	0.10	0.025	0.055	32.94	5809.44	164.41
9.44	24	0.06	0.010	0.017	25.06	5834.50	165.12
10.20	36	0.04	0.005	0.008	16.20	5850.70	165.58
10.40	20	0.02	0.001	0.003	3.84	5854.54	165.68
11.00	20	0.02	0.001	0.001	1.68	5856.22	165.73
11.30	30	0.01	0.001	0.001	1.98	5858.20	165.79
12.00	30	0.00	0.000	0.00035	0.63	5858.83	165.81

Notes:
Total runoff duration = 4 h 4 min.
Peak runoff rate = 0.02 $m^3\ s^{-1}\ ha^{-1}$.
Total runoff = 4.81 mm.

Computation This marking and tabulation information is then computed to obtain total runoff volume data, as follows:

1 The time interval in column 2 (Table 3) is obtained by the difference in the successive values of the timings in column 1. For example, the interval between the first and second point is 4 min. Time intervals can be similarly obtained for the other segments.

2 Gauge heights in column 3 are converted into discharge rates in $ft^3\ s^{-1}$ with the help of appropriate rating tables, and recorded in column 4. For this example, the rating table for a 60-cm (or 2-ft) H-flume (Table 1) was used.

Table 4 — Proforma for the compilation of runoff data.

Watershed no. : **Year** :

Area : **Treatment** :

Serial number	Date	Daily rainfall (mm)	Rainfall WMI[1] (mm h^{-1})	Runoff (mm)	Runoff (% of seasonal rainfall)	Peak rate (m^3 s^{-1} ha^{-1})

1 WMI = weight mean intensity.

3 The average discharge rates in ft^3 s^{-1} for time intervals obtained by averaging successive discharge rates, are recorded in column 5. For example, for the first time interval of 4 min the average discharge is $0 + 0.085 / 2 = 0.0425$ ft^3 s^{-1}. Similarly, the average discharge for the other time intervals may be calculated.

4 The runoff volumes in ft^3 for the time intervals are obtained using the relation : column 5 x column 2 x 60, and recorded in column 6. For example, the runoff volume during the first time interval is 0.0425 x 4 x 60 = 10.20 ft^3.

5 Columns 7 and 8 give the cumulative values of runoff in ft^3 and m^3 respectively. Column 7 is obtained by adding the values in column 6. The last value gives total runoff. Column 8 is obtained by multiplying column 7 by a conversion factor (2.83×10^{-2}).

6 Remarks may be added as footnotes to record total runoff duration in hours and minutes, peak runoff rate in m^3 s^{-1} ha^{-1}, and total runoff volume in mm. The peak runoff rate is obtained first in ft^3 s^{-1} by dividing the maximum value in column 4, by the area of the watershed. It is then converted into m^3 s^{-1} ha^{-1} by multiplying by 0.0283. For the particular example given in Table 1 the peak rate is 0.02 m^3 s^{-1} ha^{-1}. To get the total runoff in mm, take the last value of column 8, which is the total runoff in m^3, divide it by the area (m^2), and then multiply the result by 10^3.

Compilation The storm runoff thus obtained is compiled separately to give values of daily, monthly, and annual runoff. One column may be added to these compilations for recording corresponding rainfall values. The proforma shown in Table 4 will be found useful for runoff data entry.

Tipping Bucket Method with Splitters

Tipping buckets offer an accurate measurement of runoff water for plots of less than 1000 m^2 (Edwards et al. 1974), their principle of operation being used in rain gauges. Splitters are additional attachments to the tipping bucket system to sample part of the runoff water for soil loss estimation.

Equipment

Tipping buckets can be constructed locally. Their size depends on the expected flow rates, in the calculation of which the plot area, rainfall, and runoff records help in deriving the peak runoff rate. For example, at IAC, the peak runoff rate was found to be of the order of 100 mm h^{-1}. This produces about 167 L min^{-1} from a 100-m^2 area.

Appropriate buckets can be made using 16-gauge mild steel sheet. Construction details are given by Barfield and Hirschi (1986), Edwards et al. (1974), and Smith and Thomas (1988). Design plans can also be obtained from ICRISAT. The other requirements are a reed switch and activating magnet to record the tips, vertical chute assembly to direct

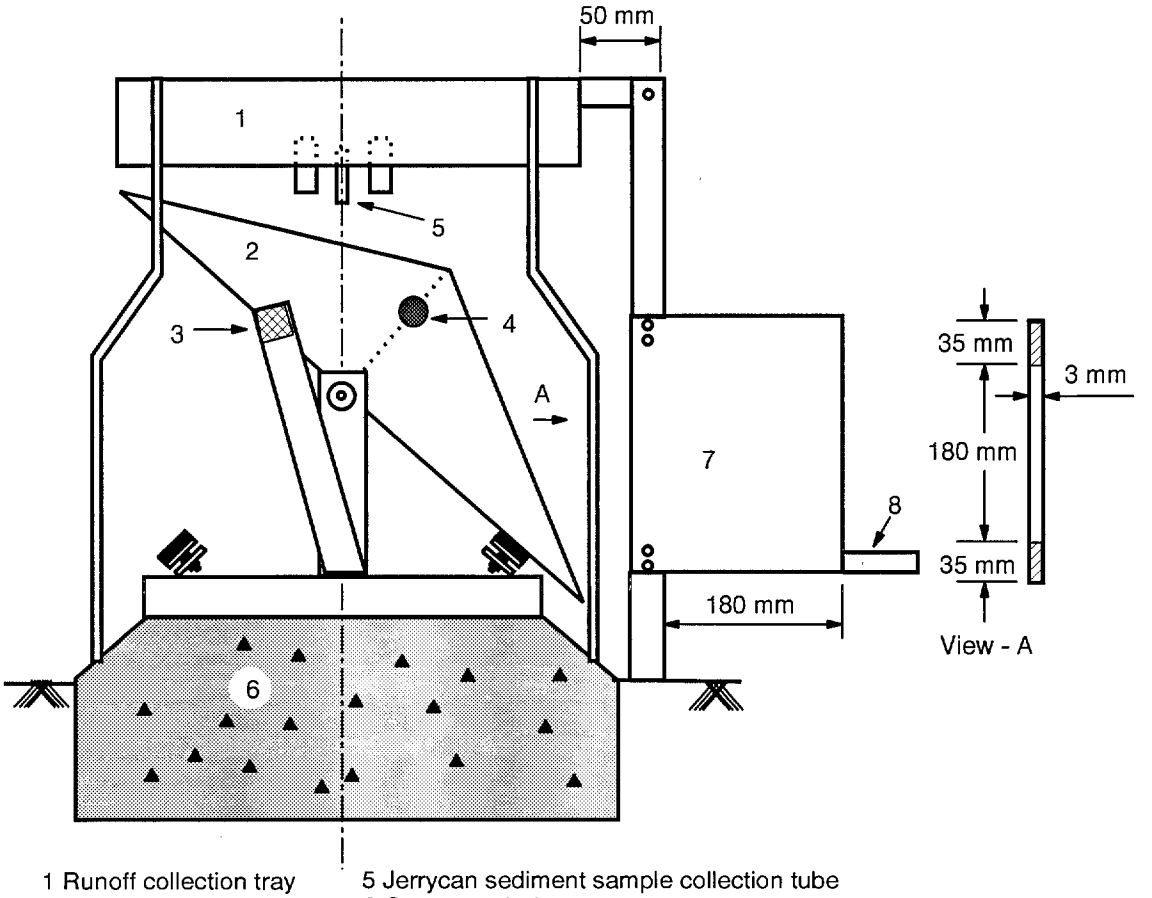

1 Runoff collection tray
2 Tipping bucket
3 Sensor switch
4 Magnet
5 Jerrycan sediment sample collection tube
6 Concrete platform
7 Splitter
8 Splitter sediment sample collection tube

Figure 10 — Schematic diagram of a tipping bucket and splitter assembly.

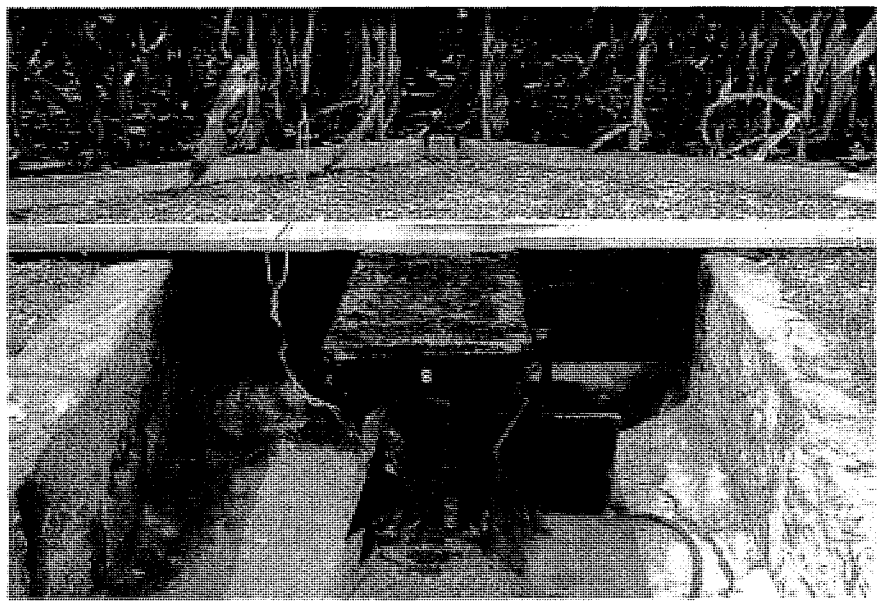

Figure 11 — A tipping bucket and splitter assembly in use.

the runoff water into the tipping bucket chamber, a datalogger to record the number of tips as a function of time, mechanical counters as a standby arrangement, and telephone cable to connect the reed switch to the logger.

A splitter is a simple device made with tin sheets. One end is connected to a tube that diverts the runoff water and the other to a closed container that collects the water sample.

Principle

A tipping bucket consists of two symmetrical chambers with a common separating wall (Figs. 10 and 11). The whole assembly pivots on an axle on the line of symmetry and rests on one of two stable positions. As water flows into the chamber below the inlet, the center of mass moves towards the vertical axis until the system becomes unstable. It then rotates on the axle and comes to rest on the other spot. During this action the full chamber empties. The other chamber begins to fill until the system becomes unstable again. The process is then repeated. The reed switch senses the number of tips and the datalogger records the tips and corresponding time. The total discharge is calculated using a calibration of the mean tip volume for different flow rates. The mean tip volume is not constant for all flow rates and the volume changes as the flow rate increases.

The splitters are fixed on one side of the bucket assembly (Fig. 11) enabling some runoff water to enter the splitter through a narrow opening facing the bucket. This water is collected in the container for estimating the sediment concentration.

Procedure

1 For accurate results the tipping buckets should be calibrated carefully. Use a V-notch to calibrate the tipping buckets.

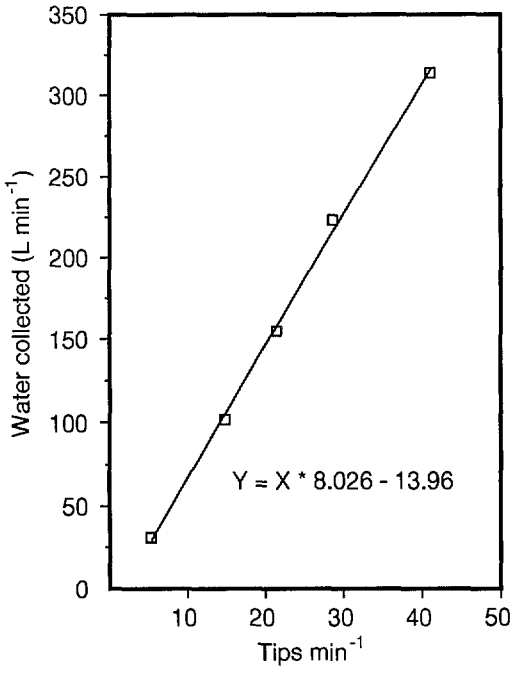

Figure 12 — Relation between water flow and tipping rate for tips > 5 tips min^{-1}.

2 Initially calibrate the V-notch by relating the discharge head to the time taken to fill a known volume.

3 Supply water to the tipping bucket with a V-notch system in a way that closely resembles the situation in the field over a range of flow rates.

4 Record the volume of water collected in a given time, and plot that volume against the number of tips during that period to obtain a calibration curve (Fig. 12).

5 During a runoff event, record the number of tips with the help of a datalogger.

6 The frequency for recording times at which tips occurred depends on the researchers' needs. For most studies, recording the tips at 1-min intervals is sufficient.

7 Convert the number of tips into runoff volume using the calibration equation.

8 From minute-by-minute records, derive the relations between total runoff, peak runoff rate, and rainfall-runoff.

9 Measure the runoff water collected through the splitter and transfer it into a clean container. Leave the container undisturbed and allow the soil particles to settle.

10 Decant clear water and transfer the soil into a tared moisture box. Dry it at 105° C and estimate the suspended sediment content.

Calculation The data on tips should be converted to runoff volume using the calibration equation relating the number of tips to the volume of water. Generally two calibration curves, one for < 5 tips min^{-1} and the other for > 5 tips min^{-1} are used.

Runoff volume (R) in liters = number of tips x constant

Depth of runoff (RO) in mm = (runoff volume in liters * 0.001) / plot area in m^2

Sediment concentration (C) in g L^{-1} = weight of sediment / volume of the sample

Suspended soil loss (S) in kg ha^{-1} = (R * C)*10 / plot area in m^2.

Notes Data on runoff can be recorded quite accurately with tipping buckets. However, it is expensive to fabricate, install, and maintain the equipment, and requires skilled personnel. The buckets should be periodically checked for loose contacts and clean reed switches. The calibration must be done accurately and, because the capacity of the buckets is affected by the flow velocity, two separate calibrations should be made for low and high flow velocities.

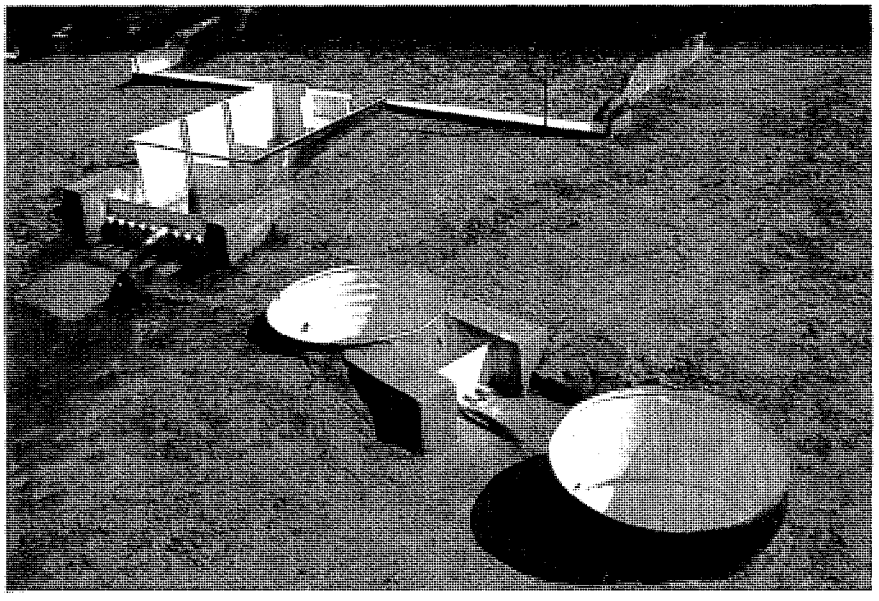

Figure 13 — Multi-slot divisors connected to tank and drums for collecting runoff from erosion plots.

Multi-slot divisor

Multi-slot divisors (Fig. 13) are generally used as standard devices for measuring runoff volume and soil loss from small areas. The details for this method can be obtained from Ullah et al. (1972). The divisor consists of a number of slots of equal dimensions fitted at the end of a divisor box. The device is based on the principle that a uniform horizontal velocity of approach will be maintained in the divisor box throughout the entire head variations, to obtain equal division of flow and sediments. Any variation in the velocity distribution is likely to result in unequal division of flow, which in turn will introduce varying degrees of error in measurement. Water passing out from one of the slots is led into a collecting drum and measured. Water from the remaining slots is allowed to drain away.

The device is generally useful for low discharge rates and has the advantages that it is simple in design and operation; there is no risk of mechanical failure; data processing is relatively simple; and it can measure both runoff and soil loss. But its use is limited to the determination of total runoff volume and soil loss only, so it is little used in research where detailed information is required on variations with time in runoff and soil loss (e.g., peak runoff rate, runoff duration, sediment concentration).

Design criteria and specifications

Criteria for the design of a multi-slot divisor are based on the following information (Ullah et al. 1972):

1 Maximum runoff volume expected in 24 hours.

2 Peak rate of runoff expected from the plot for the design frequency.

3 Maximum soil loss expected from the heaviest storm.
And, in general, the components for a multi-slot divisor installation are: boundary wall; runoff collector to catch and concentrate the flow from the plot; stilling tank; multi-slot divisor; and collecting tank.

Selection of divisor

The selection of a suitable size of divisor depends on the expected rate of runoff and the proportion of the runoff to be stored in the collecting tank. The divisor size is determined by the number of slots and dimensions of the slots, which, in turn, decide the capacity of the divisor. Aliquot size is also called the divisor ratio. For example, a 5-slot divisor has a divisor ratio of 1:5. The choice of the divisor is based on the capacity, number of slots, width, and length of the slots.

The number and size of slots

The number of slots (N) required to handle the expected maximum flow is calculated by using the relation:

$$N = 10\ APF/C$$

where F is the expected maximum runoff percentage in decimal fraction, A is the area (ha), C is the capacity of the storage tank (m^3), and P is precipitation (mm).

If the number of slots exceeds 15, it is desirable to use two divisors in series to obtain the required divisor ratio.

Once the number of slots has been decided, the size of the slots, based on the expected peak flow, is determined. It has been observed in practice that the percentage accuracy is likely to diminish considerably when large divisors with low flow depths are used. It is therefore advisable to select a divisor that has a capacity equal to the expected runoff rate. If the divisor ratio and the amount of expected runoff from the plot are known, the size of the collecting tank can be estimated.

Calibration of multi-slot divisors

After installation of the entire unit, it is essential to check the accuracy of the divisor to ensure that reliable data are obtained. To do that, the following steps should be taken.

1 Fill the stilling tank with water up to the level of the precision plate crest.

2 Stop adding water when it is about to flow over the crest.

3 Add a known amount of water into the stilling tank at a uniform rate, and collect the aliquot.

4 Multiply the aliquot by the number of slots to obtain the total amount of water.

5 Compare the amount thus obtained with the actual amount of water, to determine the percentage error.

6 Repeat this at various depths of flows. The water is generally transferred from the storage tank containing a known amount of water to the stilling tank through rubber or plastic pipes.

Maintenance

A few important precautions found to be essential for getting accurate results are the following:

1 Calibration should be checked every year before the rainy season.

2 Yearly painting is necessary to prevent corrosion and rust formation. The slot and the crest plate should be painted with good-quality paint.

3 During the rainy season, the slot should be cleaned after every runoff event.

4 The trash collected should be removed and the tank cleaned properly.

5 Observations should be made during the rains to see that the divisors are actually functioning correctly and that there is no leakage or extraneous water entering the collecting tanks.

6 All lids should be tightly closed after measurements are made.

7 The outlet of the collecting tanks should be checked for leakage.

Soil Loss Measurement with a Sediment Sampler

Design criteria Sediment samplers have been used extensively for monitoring sediments lost from experimental plots. Among the best-known and most widely used are the Coshocton wheel runoff sampler and the multi-slot divisor. However, the use of these samplers has usually been restricted to watersheds that are less than 1 ha, primarily because of their limited capacity. This section describes a simple sediment sampler developed to monitor sediments from watersheds up to 400 ha (Pathak 1991), based on the following design criteria:

1 The time variation in sediment load is relatively more important than the horizontal and vertical variation.

2 The sampler must be able to monitor the sediment quantity efficiently during that segment of the hydrograph at or near the peak rate (since this segment accounts for the major portion of soil loss).

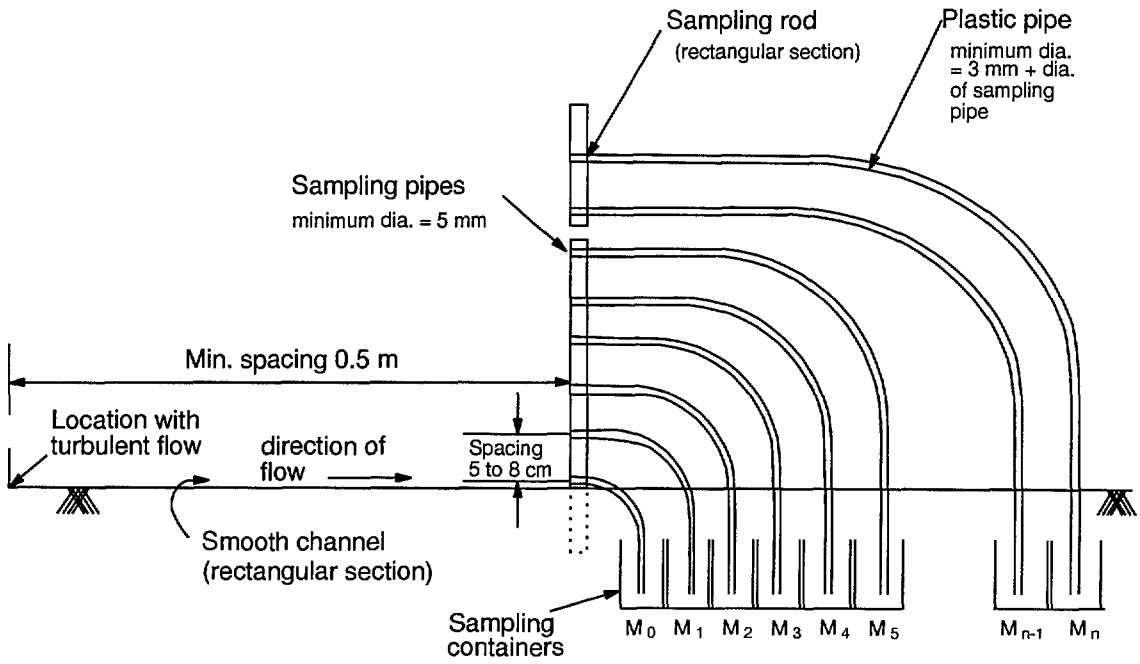

Figure 14 — Schematic diagram of the sediment sampler.

Working principle and operation

To simplify the design of the runoff sampler, momentary or instantaneous fluctuations in sediment concentration across a flow section are avoided. This is done by selecting as the sampling site the high-turbulence downstream point where the sediment variation across the flow section is minimized. The rapidly fluctuating nature of runoff flow from small watersheds, and its relation with time, is used in the sampler to account for the time variation in sediment loads (Pathak 1991). This is achieved by taking representative samples for different hydrograph segments and by collecting samples at different flow depths. The samples are taken through small-diameter pipes which are set at specified heights from the bed of the channel (Fig. 14), and are connected to separate containers by plastic pipes.

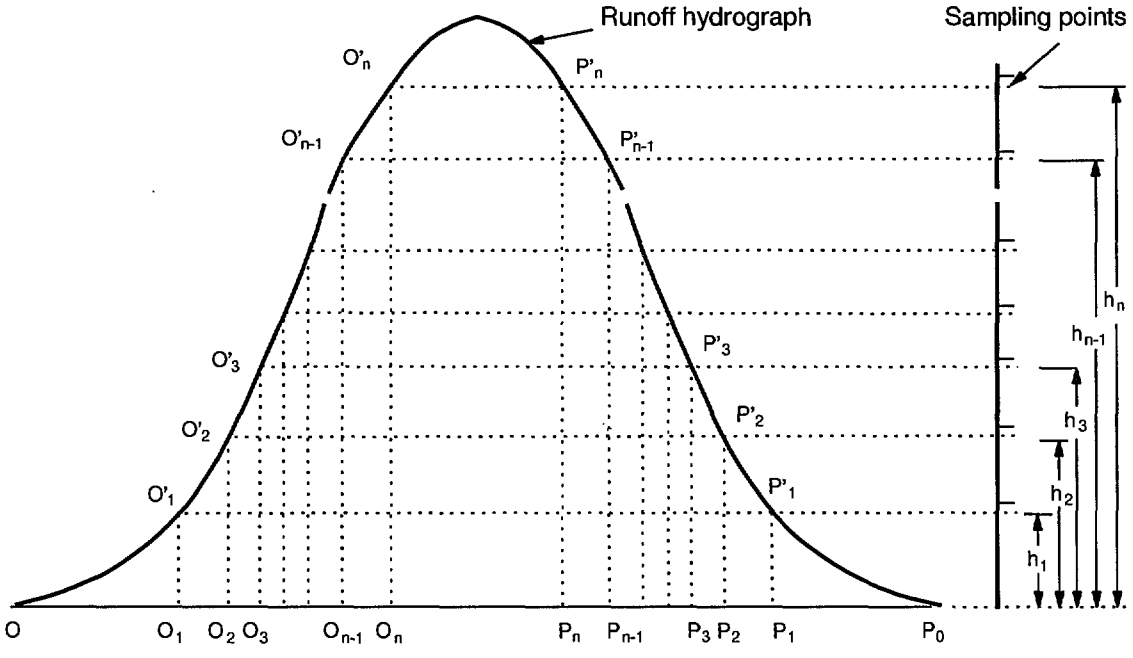

Figure 15 — Working principle of the sediment sampler.

The working principle of the sampler is explained in Figure 15 in the form of a single-peak runoff hydrograph. The lowest pipe samples the sediment throughout the total runoff period, while the upper pipes, depending upon their relative positions, sample for shorter periods. The sample volume and sediment concentration for each container are determined individually and hydrograph data are recorded at each sampling point. The actual sediment concentrations for the different hydrograph segments and total soil loss are calculated by using the following equation:

$$S_t = V_0 (Vs_0 Cs_0 - Vs_1 Cs_1) / (Vs_0 - Vs_1) + V_1 (Vs_1 Cs_1 - Vs_2 Cs_2) / (Vs_1 - Vs_2) + \ldots$$
$$+ V_{n-1} (Vs_{n-1} Cs_{n-1} - Vs_n Cs_n) / (Vs_{n-1} - Vs_n) + V_n Cs_n$$

where Vs_0, Vs_1, Vs_2, ..., Vs_n and Cs_0, Cs_1, Cs_2, ..., Cs_n are the volumes and sediment concentrations of the runoff samples collected in the containers M_0, M_1, M_2, ..., M_n, respectively.

The V_0, V_1, V_2, ..., V_{n-1}, V_n are the runoff flow volumes for the hydrograph segments, $OO'_1O_1 + P_1P'_1P_0$, $O_1O'_1O'_2O_2 + P_2P'_2P'_1P_1$, $O_2O'_2O'_3O_3 + P_3P'_3P'_2P_2$, ..., $O_{n-1}O'_{n-1}O'_nO_n + P_nP'_nP'_{n-1}P_{n-1}$, $O_nO'_nP'_nP_n$ (see Fig. 15).

The values of V_0, V_1, V_2, ..., V_n can be calculated from the runoff hydrograph, while the values of Vs_0, Vs_1, ..., Vs_n and Cs_0, Cs_1, ..., Cs_n can be determined from the samples collected in containers M_0, M_1, ..., M_n.

Construction and installation

The fabrication of the sediment sampler, based on the following guidelines, is quite simple and can be done with readily available materials (for further details see Pathak 1991):

1 The materials and cross-section of the rod should be chosen to meet the requirement of low vibration in the rod during flow. Minimum vibration is important for accurate sampling.

2 The intake approach conditions for all the sampling pipes should be similar because a minor difference may result in considerable modification in sampling rates.

3 Plastic pipes of slightly larger diameter than the sampling pipes should be used to avoid additional resistance to the sampled flow.

4 The number of sampling pipes and their spacing are determined on the basis of the desired accuracy and sediment flow conditions. A wider spacing between the sampling pipes on the lower portion and relatively closer spacing on the upper part of the sampling rod is recommended.

5 Containers of different sizes should be used, as the sample volumes to be collected vary in each container.

6 The metal rod holding the sampling pipes should be firmly fixed in the concrete channel bed.

7 The distance between the sampling point and turbulence location is critical and selection should be made on the basis of the expected degree of turbulence.

Limitations

This sampler, however, has the following limitations:

1 It is not efficient where the eroded sediments contain a very high proportion of medium and coarse sands.

2 For storms having multiple peaks (more than two) its accuracy to estimate soil loss is low.

3 This sampler is useful only for small watersheds (less than 400 ha).

Tilting Flume Method

Equipment

The tilting flume is a useful device for measuring flow patterns under controlled conditions. The unit comprises the tilting flume assembly, a water circulation system, flow measuring devices, H-flume, and runoff sampler. Component details are given in Figure 16 and the assembly is illustrated in Figures 17 and 18.

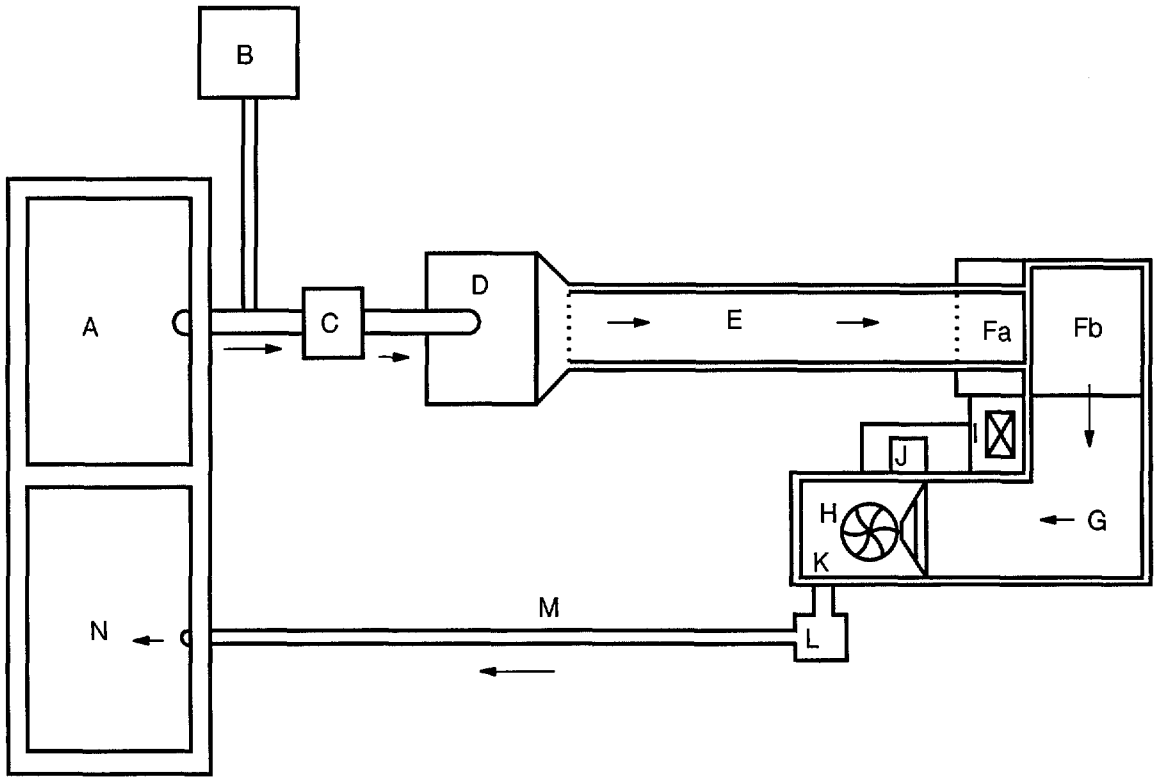

A Water supply tank
B Elevated priming tank
C Pumping unit
D Stilling trough
E Tilting flume
Fa Drainage water collection tank
Fb Dead storage stilling tank
G Runoff channel
H Coshocton wheel
I Sedment sample collection
J Stage-level recorder
K Outlet
L Manhole
M Return flow line
N Silt settling tank

Figure 16 — Components of a tilting flume unit.

Principle The dynamics of open-channel flow are complex; simplification can be achieved by applying similitude principles. In sloping channels there are inertial and gravity forces that influence flow regimes. Depending upon the ratio of these forces, moving water creates different eroding patterns. The greater the kinetic energy, the higher the sediment detachment and transport rates.

Procedure

1 Bring water circulation system to the turn-key stage.

2 Lift the tilting flume to a desired slope using the hydraulic system. Note the sand profile levels in the flume.

3 Start the pump and regulate the flow through the by-pass arrangement.

4 Record the initial volume of water as it enters the inlet portion. Measure the water profiles every 5 min, and record the final reading at the inlet. Determine the amount of runoff during the run. Collect runoff samples for soil loss estimation.

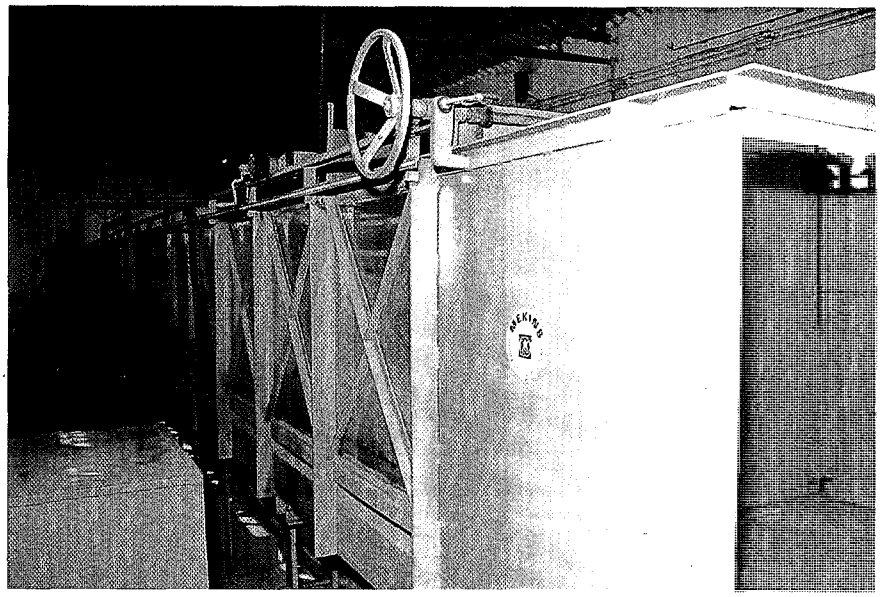

Figure 17 — A tilting flume assembly showing the stilling trough connected to the flume.

Calculations

Slope of the bed. Calculate the slope (%) of the bed of tilting flume using the relation

$$S = (F/L)\ 100 \qquad (1)$$

where S = slope (%), F = amount of fall (m), L = length of span (m).

Slope of sand layer. Determine the slope of the sand layer using the relation

$$s = (f/h)\ 100 \qquad (2)$$

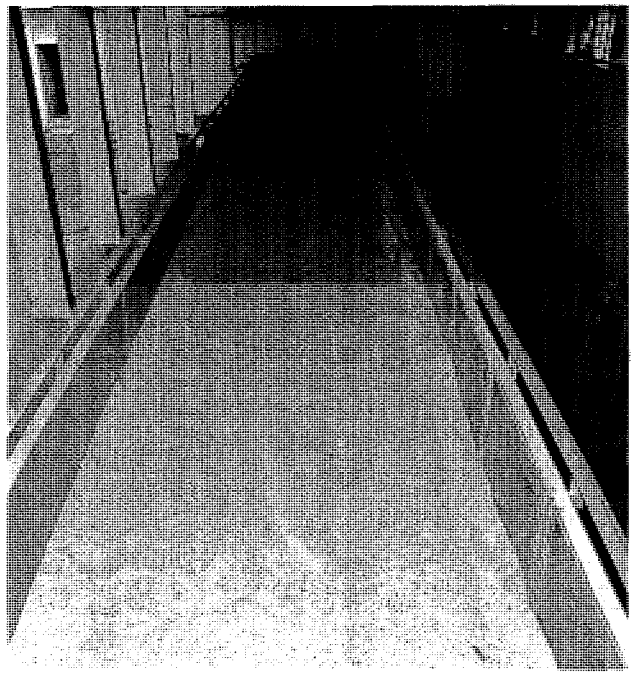

Figure 18 — A tilting flume assembly showing the tilting flume containing soil.

where s = slope (%), f = amount of fall (m), h = horizontal distance (m).

Flow rate. Determine the average inflow rate using the formula

$$I = (V_2 - V_1) / D \quad (3)$$

where I = average flow rate ($m^3 s^{-1}$), V_2 = final volume at the end of run, V_1 = initial volume at the start of run, D = duration of run (s).

Storage of stilling tank. Estimate the dead storage of stilling tank using the formula

$$d_s = L\ B\ H \quad (4)$$

where d_s = dead storage (m^3), L = length (m), B = breadth (m), H = depth below crest level (m).

Outflow. Determine the outflow volume from the stage-discharge rating tables (refer to Table 1) and use formula

$$O = O_1 + O_2 + \ldots\ldots O_n \quad (5)$$

where O = total outflow (m^3), O_1 to O_n = outflows during particular time intervals.

Soil loss in dead storage. Determine the soil loss from the dead storage using the formula

$$E_1 = d_s\ g_1 \quad (6)$$

where E_1 = silt loss (kg), d_s = dead storage (m^3), g_1 = average sampled soil loss per liter of outflow (g L^{-1}).

Soil loss in outflow. Estimate soil loss in outflow as follows:

$$E_2 = O\ g_2 \quad (7)$$

where E_2 = soil loss in outflow (kg), g_2 = average sampled soil loss per liter of outflow (g L^{-1}).

Total soil loss. Determine the total soil loss by summing E_1 and E_2 from eqns (6) and (7):

$$E = E_1 + E_2. \quad (8)$$

References

Barfield, B.J., and **Hirschi, M.C.** 1986. Tipping bucket flow measurements on erosion plots. Transactions of American Society of Agricultural Engineering 29:1600–1604.

Edwards, I.J., Jackson, W.D., and **Fleming, P.M.** 1974. Tipping bucket gauges for measuring runoff from experimental plots. Agricultural Meteorology 13:189–201.

Pathak, P., Murthy, V.V.N., and **Miranda, S.M.** 1981. Runoff measurement from small agricultural watersheds. Patancheru 502 324, Andhra Pradesh, India: International Crops Research Institute for the Semi-Arid Tropics. 50 pp. (Limited distribution.)

Pathak, P. 1991. Runoff sampler for small agricultural watersheds. Agricultural Water Management 19:105–115.

Smith, G.D., and **Thomas, N.P.** 1988. A design for simple tipping bucket to monitor runoff from small plots. Indian Journal of Dryland Agricultural Research and Development 3:159–165.

Ullah, W., Gupta, S.K., and **Dalal, S.S.** 1972. Hydrological measurements for watershed research. Dehradun, India: Jugal Kishore and Co. 299 pp.

USDA (United States Department of Agriculture). 1979. Field manual for research in agricultural hydrology. U.S. Department of Agriculture Handbook no. 224. Washington, DC, USA: United States Department of Agriculture. 547 pp.

Soil Moisture Measurement

Piara Singh and K P R Vittal

Introduction

Agricultural scientists, farmers, and other producers are often interested in the nutrient and water status of soil in order to increase and sustain food and feed production. The questions often asked on soil water are: How dry or wet is the soil? How much moisture can a soil hold and supply to plants to support normal growth and maintain or improve yields?

Moisture content is the basic measurement required to answer these questions, and there are several direct and indirect methods for measuring it. Here we present the gravimetric, neutron probe, and time domain reflectometry (TDR) methods. The gravimetric (direct) method is the most important because it is also employed to calibrate instruments used in the two last-named indirect methods.

Gravimetric Method for Measuring Soil Moisture Content

Equipment An auger or a sampling tube, hammer for driving the soil tube (if required), a knife, a board or hard wood, soil containers with tight-fitting lids, a wooden box for transporting samples, an oven with means for controlling the temperature to 100–110°C, a balance for weighing the samples.

Principle Water content measurement by gravimetric method involves weighing the wet soil sample, removing the water from the soil by oven-drying, and reweighing the sample to determine the amount of water removed. Water content then is obtained by dividing the difference between wet and dry masses by the mass of the dry sample, to obtain the ratio of the mass of water to the mass of dry soil. When multiplied by 100, this becomes the percentage of water in the sample on a dry-mass (or, as often expressed, on a dry-weight) basis (Klute 1986).

Procedure The procedure given here is intended for use in routine work where moderate precision (say a precision of ±0.5% water content) is desired.

1 Select the site where the samples are to be taken.

2 Drive the sampling tube or auger to the desired soil depth.

3 Pull out the soil sampling tube or auger, carefully sample the soil and transfer it to the labeled moisture can. Cover the can immediately with a lid and place it in the wooden box.

4 Repeat the above procedure for collecting other soil samples from various soil depths and sites.

5 Transport the samples to the laboratory.

6 Weigh the samples before and after oven-drying at 105°C for 24 h.

7 Record the weights of wet and oven-dried samples and the tare weight of cans.

Calculations

$$\theta_g = (W_w - W_d)/(W_d - W_c)$$

$$\theta_v = \theta_w \rho_b / \rho_w$$

where θ_g = gravimetric water content (g of water g^{-1} of soil), W_w = mass of wet soil and container (g), W_d = mass of dry soil and container (g), W_c = mass of container (g), ρ_b = bulk density of the soil (g cm^{-3}), and ρ_w = density of water (g cm^{-3}).

Notes

1 The gravimetric method is the basic one for moisture content determination. When other methods are employed, the results should be calibrated with the gravimetric method.

2 The time necessary to reach constant dry-weight will depend upon the type of oven used, the size and number of samples in the oven, and the nature of soil.

3 Avoid adding wet samples in the oven when the previous samples in the oven are at an advanced stage of drying.

Neutron Probe Method for Measuring Soil Moisture Content

Equipment Neutron moisture meter, scaler rate meter, aluminum access tubes, rubber stoppers, access tube cap, soil auger, film badges, leak test kits, license if required.

Principle The property of the hydrogen nuclei to scatter and slow down neutrons from radioactive substances is the basic principle in this technique. When neutrons from a radioactive substance in the probe come in contact with hydrogen nuclei of water molecules, the fast neutrons are slowed down. These low energy neutrons (thermalized) are detected and counted by a meter. The number of neutrons counted is proportional to the hydrogen nuclei and, hence, the volumetric water content in the soil system. The device for counting the thermalized neutrons is the scaler rate meter. This method is referred to as the neutron probe technique or the neutron moisture meter (NMM) technique (Klute 1986), in which two procedures are involved.

Procedure A: Installation of access tubes and probe calibration

1 A range of moisture contents is needed to calibrate the neutron probe for a given soil type. This can best be done in the dry season by wetting a few plots in a field to different levels of water content (for example, one plot wetted to field capacity, another with no wetting, and a third with intermediate wetting).

2 Push a soil tube (diameter depending upon the type of the probe used) slowly into the soil by hammering or using a hydraulic machine, without causing soil compaction, and take 10-cm-long soil core samples starting at 5-cm soil depth to the maximum rooting depth.

3 Transfer these soil samples to polyethylene bags or soil cans and transport them to the laboratory for determining water content by the gravimetric method.

4 Plug one end of the aluminum access tube with a rubber stopper. With this closed end in the hole, push the access tube into the hole such that it fits snugly to the maximum depth. Cut off the extra tube so that only 25 cm of it projects out of the soil.

5 Place the probe unit over the access tube preparatory to lowering it into the hole.

6 Select an appropriate counting time and take four or five standard counts while the source is still in the shield.

7 Take actual probe counts by lowering the source to the middle of each layer sampled, i.e., at 10, 20, 30, 40, 50 cm soil depth, and so on.

8 Repeat this process of soil sampling, installation of access tubes, and probe readings for the wet and dry plots. Repeat this process several times so that there are sufficient data points (minimum of six moisture ranges with three replicated samples for each range) for developing a calibration curve.

9 Multiply the gravimetric moisture content by the bulk density of each horizon to calculate the volumetric moisture content. Because of variability in soil texture and structure, different bulk densities may have to be used for different soil layers.

10 Calculate the count ratio (CR) by dividing actual counts from each soil depth by the mean standard count.

11 Develop a calibration equation for the soil by regressing volumetric moisture content (θ_v) on the count ratios as a dependent variable. The calibration equation thus developed is used for estimating water content of the soil if count ratios are known.

Procedure B: Taking probe readings and estimating soil moisture

This procedure is used for estimating soil moisture content in experimental plots:

1 Install neutron probe access tubes in plant rows of each experimental plot using the procedure described above for neutron probe calibration. The number of tubes per plot is determined by the size of the plot and soil variability.

2 Clean the access tube with a long brush or with a cloth wrapped on a stick to remove dust or moisture sticking inside the tube. Check the tubes with a dummy probe so that it moves freely in the hole.

3 Place the neutron probe over the tube and take four or five standard counts while the probe is still in the shield.

4 Lower the source into the tube and take readings at every 10-cm depth intervals, starting at a soil depth of 10 cm.

5 Calculate CR by dividing the actual counts by the mean standard count.

6 Calculate volumetric moisture content by substituting the value of CR in the calibration equation. For example, the calibration equation developed for a Vertisol at ICRISAT Asia Center using the Didcot probe is : $\theta_v = -0.122 + 0.539$ CR.

Table 1 — Sample calculations for soil moisture content.

Soil depth (cm)	Actual count	Count ratio	Volumetric water content
30	250	0.5	0.147
45	400	0.8	0.309
60	450	0.9	0.363

Sample calculations

Given the standard count as 500 and actual counts as 250, 400, and 450 for the 30, 45, and 60-cm soil depths, respectively, the moisture content can be calculated using the above calibration equation as shown in Table 1.

Notes

1 For the 0–5 cm soil layer, determine moisture content by the gravimetric method, and multiply by the bulk density of the horizon to obtain the volumetric water content.

2 Separate calibration curves may be needed for different soil layers of the same soil profile if they markedly differ in soil properties.

3 With reasonable attention to safety rules supplied by the manufacturer, the health hazard involved in using the equipment is small. But important precautions are the following:

a) Keep the probe in the shield at all times except when it is lowered into the soil for measurements.

b) Personnel who operate the probe should reduce exposure to the small radiation escaping from the shield by maintaining a distance of a few meters between them and the probe, except when changing its position.

c) Transport the probe in the back of a truck, or in a car trunk.

d) Require operators to wear a film badge at waist level.

e) When the probe is not in use, lock it in a storage room away from people.

f) Have a semi-annual leak test performed on the source by a competent safety officer.

g) Probe maintenance should be performed by personnel trained in the use of radioactive equipment.

Time-Domain Reflectometry (TDR) Method for Measuring Soil Water Content

The measurement of soil water under field conditions has relied mainly on gravimetric sampling, installation of resistance blocks, and lysimetry or neutron moderation. But the destructive nature of sampling, time involved in drying samples, and its labor-intensive nature are drawbacks of the gravimetric method. In addition, to convert gravimetric moisture

content values to volumetric water content requires measurement of the bulk density for each soil depth. The requirement to calibrate resistance blocks individually for each site, and the hysteresis of the moisture characteristics of both the blocks and soil, seriously limit their utility in research. Also, lysimeters are expensive and hence cannot easily be replicated. And, apart from radiation hazards, the need to install access tubes and make calibrations for each location are additional difficulties in using neutron moisture probes.

By contrast, the TDR method, which measures the high-frequency electrical properties of materials, can avoid many of these limitations. During the last decade some of the potential applications of TDR for measuring water content and other soil properties have been explored (Hanks and Ashcroft 1980; Topp and Davis 1985; Topp et al. 1983).

Equipment

The items needed for measuring soil moisture content using the TDR are the TRASE system and wave guides of different lengths.

Principle

The TDR system operates over a range of radio frequencies (100–1000 MHz), and can be used to measure the high-frequency electrical properties of porous materials. In soil applications, TDR is used to measure dielectric constants of soil components. The speed with which a microwave pulse travels down a parallel transmission line depends on the dielectric constant, K, of the material in contact with and surrounding the transmission line. The higher the dielectric constant the lower the speed.

For soil, which is composed of air, minerals, organic particles, and water, the dielectric constants of these materials are:

air	1
mineral particles	2–3
water	80.

Because of large differences in K of soil constituents, the speed of travel of a microwave pulse of electricity in a parallel transmission line buried in the soil, is largely dependent on the soil's water content. The strong dependence of the dielectric constant on water content was demonstrated amply by Topp et al. (1980) for a number of soils with varying grain sizes. They concluded that the high-frequency dielectric constant is only weakly dependent on soil type, soil density, soil temperature, and pore water conductivity.

When a microwave pulse travels down a transmission line it behaves in many ways like a beam of light that travels down a tube and is reflected back by a mirror at the end. Discontinuities in the transmission lines and the surrounding materials cause some of the microwave energy to be reflected back through the line. When the pulse reaches the end of the line, virtually all the remaining energy in the pulse is also reflected back to the line.

These characteristics make it possible to measure the time required for a microwave pulse to travel down a known length of transmission line (referred to as wave guides) buried or driven into soil. The apparent dielectric constant, K_a, of the soil can then be determined by the relation

$$K_a = (tc\ L^{-1})^2$$

where L = length of wave guides (cm), t = transit time in nanoseconds (10^{-9} s), and c = speed of the light (cm/10^{-9} s).

The transit time is defined as the time required for the pulse to travel in one direction from the start of the wave guide to the end of the wave guide. If the soil is completely dry, K_a will be between 3 and 4. If 25% of the soil volume is water, K_a will be approximately 11–12. For agricultural soils, the value of K_a depends primarily on volumetric water content of the soil and is largely independent of the type of the soil. The relation of K_a to volumetric water content is established by careful measurements of K_a in test cells prepared with accurately known volumes of water in soil (Fig. 1). This relation is then used to automatically convert field measurement of K_a to the volumetric water content of the soil.

Measurement system

The TDR processor generates fast microwave pulses that are sent down transmission lines consisting of coaxial cables and wave guides. The start of each pulse is referred to as the incident pulse, and is the point from which subsequent time measurements are made during the automatic measurement of water content. After a single pulse is launched down the transmission line, effective voltage of the line is measured at given intervals (10 picoseconds, i.e., 10 x 10^{-12} s). The process is repeated pulse by pulse, until the stored values cover the complete time range of interest. The window (sampling time) is changed for different applications. The stored data are then processed to display the graph of TDR pulse as it moves down the wave guides. For moisture content measurement, transit time is important. It is the difference between zero set time (peak) and time to the point of reflection (which is a trough point of the wave reached at the end of wave guides): see Figure 2.

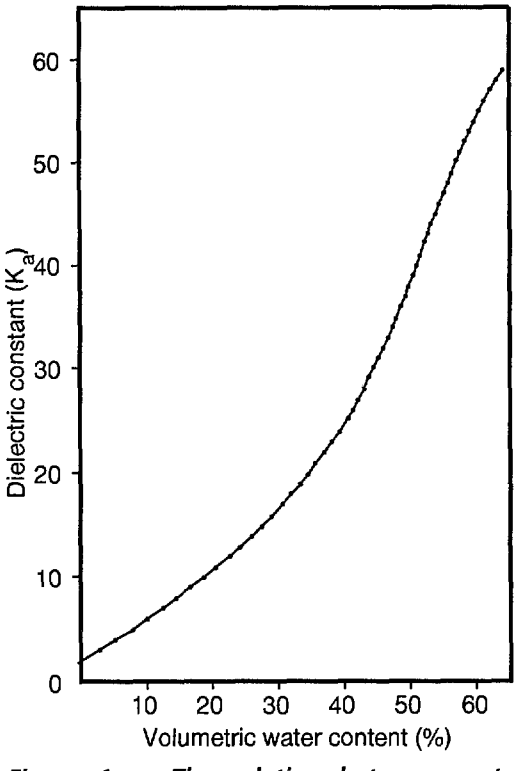

Figure 1 — The relation between water content and dielectric constant.

For measuring soil water content, parallel pair transmission lines are used. These parallel rods/wires serve as conductors, and the soil in which the rods are installed serves as a dielectric medium. The pair of rods acts as a wave guide. The signal propagates as a plane wave in the soil. It is reflected from the end of the transmission line in soil and returns to the TDR system. The TDR system operates as a one-dimensional or linear radar system. The timing device in the TDR measures the time between sending and receiving the reflected signal. This time interval relates directly to the propagation velocity of the signal in the soil, since the length of the line is known. The propagation velocity is indicative of the volumetric water content, decreasing as the water content increases.

Site selection and sample volume must be considered for soil measurements. With the TDR, there is some flexibility in sample volumes, but the greater flexibility in placement and orientation of guides is very important. This flexibility allows a

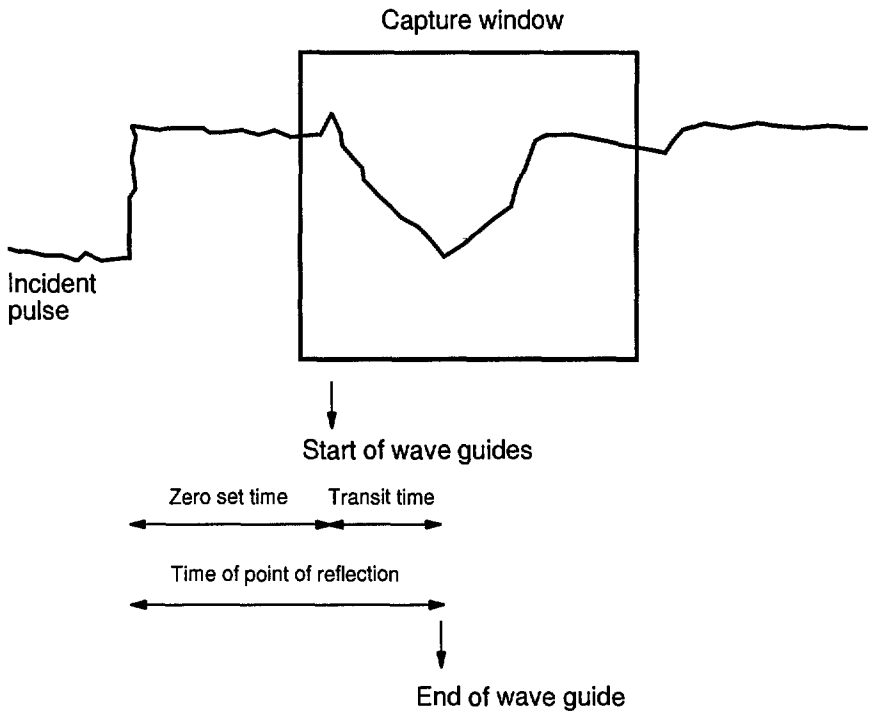

Figure 2 — Trace of an electrical pulse in the time-domain reflectometry system.

variety of possibilities for measuring a range of water contents. Although vertical or horizontal installation of guides is appropriate for many applications, there are significant advantages to installations at 45° of vertical for lines intended for long-term monitoring and measurement. Lines at an angle go across vertical inhomogeneities such as vertical drying cracks, worm channels, and rooting patterns of local extent. Objects placed vertically in soil tend to initiate drying and result in cracks or holes that act as preferential paths for water during rainfall or irrigation. Lines installed at an angle have a reduced tendency to initiate cracks and openings. And it is slightly more difficult to install TDR lines at an angle using the guide for the rods than it is to install them vertically.

Procedure Wave guides are used for point measurements, and those that can be buried are used for continuous monitoring.

1 Check the charge of the batteries in the instrument.

2 Check the instrument in pure water, in soil cells with known amounts of water, and for reproducibility/sensitivity of the probes.

3 Select the site.

4 To bury the probe/wave guides, insert a pair of wave guides of similar length either horizontally, vertically, or at an angle into the soil using an alignment block. Probes that are buried for continuous measurement should be inserted with care. A heavy slurry of water and native soil should be poured down the hole after inserting them so that they are completely covered. Maintain 5 cm distance between two wave guides.

5 Connect the wave guides through the sockets of the connector and then tighten the knob. When a number of sites are to be monitored simultaneously, connect the buried wave guides through the multiplexure to the TDR processor. Single buried wave guides may be connected to the TDR processor directly.

6 Set up the screen for length, printing, date, time, etc. The "measure screen" is for channel, wave guide selection, length of cable, etc. The "data screen" is for viewing readings.

Water-Holding Capacity

The capacity of soils to absorb and retain water provides a reservoir from which water is withdrawn by plants during periods between rainfall and/or irrigation. Available water capacity of the soil is defined as the water retained in the rooting zone of the soil at field capacity (drained upper limit: DUL) minus the permanent wilting point (PWP). However, plant available water is the amount of water retained in the rooting zone between field capacity and the lower limit of water extraction by roots (APSRU 1995). Field capacity (FC) is defined as the amount of water held in the soil after excess water has drained away and after the rate of downward movement of water has perceptibly decreased (Taylor and Ashcroft 1972). Field capacity in sandy soils may be established in 1–2 days after drainage, while that of clayey soils (e.g., Vertisols) may take a week or more after saturation of the profile. The lower limit (LL) of water extraction is defined as the amount of water left in the soil profile when a well-fertilized crop in its full vegetative stage and in an environment of low evaporative demand wilts permanently due to drought stress.

Estimation of field capacity or drained upper limit

Equipment Spade or shovel, water tank and a pipe line, polyethylene plastic, soil auger, moisture cans, balance, oven, a tensiometer, and a bulk density sampler.

Principle Water is added to soil in situ to rewet the soil profile to a desired depth. After the water has moved into the drier underlying soil, and drainage from the initially wetted zone becomes negligible, the water content of the soil profile at that time is regarded as being at FC (APSRU 1995).

Procedure

1 Select an appropriate field site and construct an earthen dike about 30 cm high around an area approximately 3 m x 3 m.

2 Install a tensiometer in the middle of the pond. The tensiometer cup should be located at the depth of maximum rooting. Seal the soil-surface tensiometer tube interface with wet clay to minimize preferential water flow down the outside of the tube.

3 Line the bank with plastic sheeting to limit lateral water movement.

4 Pond the bordered area to a depth of 15 cm and continue to do so, on a weekly basis, until the tensiometer readings indicate that the profile is saturated (i.e., matric potential is zero). This may be very quick or may take several weeks, depending on soil type.

5 When the tensiometer readings indicate saturation, cover the site with an evaporation barrier, e.g., grass, followed by polyethylene sheeting.

6 Continue to monitor the tensiometer until it shows that the water has ceased draining through the profile.

7 At this point, gravimetric soil water measurements are taken and water content determined. Make at least five separate borings and take samples at successive increments to the depth of wetting or maximum rooting. Bulk density measurements should also be made using cores.

Calculations The soil water content at FC is calculated by

$$FC_w = M_w/M_s$$

or

$$FC_v = FC_w \rho_b/\rho_w$$

$$DUL = FC_v$$

where FC_w = gravimetric FC (g water g^{-1} soil), FC_v = volumetric FC (cm^3 water cm^{-3} soil), M_w = mass of water (g), M_s = oven-dried mass of soil (g), ρ_b = bulk density of soil (g soil cm^{-3} soil), and ρ_w = density of water (g water cm^{-3} water).

Notes

1 Where greater precision is required or soil variability is known to be large, it will be necessary to increase the number of sampling sites.

2 Bulk density of the soil (as described under soil moisture characteristics) should be determined concurrently with the field capacity to convert the gravimetric to volumetric water content.

Pressure Outflow Method for Estimating Permanent Wilting Point (PWP)

Principle By statistical correlation procedures it has been observed that PWP, measured by the sunflower method (not discussed here), is equivalent to the soil water content of a disturbed soil sample placed on a permeable membrane or porous plate and equilibrated with an applied pressure of 1.5 MPa (Klute 1986).

Equipment Mortar and pestle or soil grinder, sieve having 2-mm diameter holes, pressure plate or pressure membrane apparatus, rubber or brass sample rings to retain soil samples, trays, regulated air pressure system, moisture cans, spatula, balance, and drying oven (Klute 1986).

Procedure

1 Air-dry the soil, crush it with a mortar and pestle or soil grinder, and pass through a 2-mm sieve. Discard the material retained by the 2-mm sieve. If the soil is stony, the percentage by weight of coarse fragments must be determined on a subsample for use in PWP computations.

2 Place the soil sample rings onto the plates and fill these rings with soil. Make sure that soil has good contact with the plate.

3 Place the plates along with the soil samples in the trays. Wet the

plate and the soil samples from below slowly with a water bottle until the samples are wet and there is thin layer of standing water on the plate.

4 Leave the samples to wet fully overnight.

5 Next day transfer the plates to the pressure chamber and place the lid on it and bolt it tightly with a wrench.

6 Apply a positive pressure of 1.5 MPa to the pressure chamber.

7 When the extraction is complete, remove the soil samples.

8 Weigh the samples before and after oven-drying for 24 h at 105°C and calculate the moisture content by the gravimetric method.

Calculations The permanent wilting point approximation on a weight basis (PWP_w) and on a volume basis (PWP_v) are given as

$$PWP_w = M_w/M_s$$

and

$$PWP_v = PWP_w\, \rho_b/\rho_w.$$

For soils having > 2% by weight coarse fragments:

$$PWP_w = (M_w/M_s)/(1 + M_{cf}/M_s)$$

$$PWP_v = PWP_w\, \rho_b/\rho_w$$

where M_{cf} = mass of coarse fragments (g), ρ_b = bulk density of the soil including coarse fragments (g cm^{-3}), and ρ_w = density of water (g cm^{-3}).

Notes

1 The 1.5 MPa pressure plate results correlate so well with the PWP measured by the sunflower method for nonsaline soils that it is usually used in place of the time-consuming sunflower method.

2 For fine-textured soils, undisturbed soil cores taken from the field can also be used to determine PWP instead of the disturbed soil samples.

Estimation of Lower Limit (LL) of Water Extraction: Field Method

Procedure The lower limit is obtained by allowing a crop at full vegetative stage to extract water until it wilts as a result of drought stress. This is achieved by covering a small plot within the crop with a temporary rain shelter (3 x 3 m) at or around anthesis in order to restrict water supply to the crop until it wilts. Soil water content is determined when the crop wilts, and that water content is considered to be the lower limit for that particular crop (APSRU 1995).

Calculations These are the same as for drained FC_v or upper limit.

Notes

1 The crop should be well-fertilized and should provide complete cover to the soil so that water extraction from the profile is maximal.

2 The plot selected should be away from trees so that it is unaffected by tree roots.

3 Repeated measurements over two or more seasons may be needed to obtain a good estimate of the lower limit.

Available Water Capacity (AWC)

The AWC is the amount of water in the soil that can be removed by plants. For field soils, the AWC is estimated by the difference in soil water content between FC and PWP:

$$AWC_w = FC_w - PWP_w$$

or

$$AWC_v = FC_v - PWP_v$$

where AWC_w and AWC_v are calculated in kg kg^{-1} and m^3 m^{-3}, respectively. Sometimes AWC_v is calculated on a volumetric basis per unit area or as mm m^{-1} (i.e., mm of water in a soil of 1 m depth).

Example Given the data on AWC_w and bulk density of soil shown in Table 2, calculate the total amount of available water in mm m^{-1} of soil. Solution: total available water content in the 100-cm depth = 19.61 cm = 196.1 mm m^{-1}.

Table 2 — Sample data for the calculation of available water capacity.

Depth increment (cm) (1)	AWC_w (g g^{-1}) (2)	Bulk density (g cm^{-3}) (3)	AWC_v (cm^3 cm^{-3}) (4) = 2 x 3	Layer thickness (cm) (5)	Depth of water (cm) (6) = 4 x 5
0– 15	0.05	1.2	0.06	5	0.30
15– 20	0.10	1.3	0.13	15	1.95
20– 80	0.15	1.4	0.21	60	12.60
80–100	0.17	1.4	0.238	20	4.76

Plant available water capacity (PAWC) PAWC is the maximum amount of soil water available to the plant. PAWC is determined from the drained upper limit (DUL) or field capacity of the soil and the lower limit (LL) of a particular crop grown in that soil. It is estimated as the difference between DUL and LL:

$$PAWC = (DUL - LL) * (\text{increment depth})$$

(where DUL and LL are expressed as volumetric water content, and increment depth as millimeters).

Soil Matric Potential Measurements with Tensiometers

Introduction In addition to soil water content, it is necessary to know the tenacity — or the energy with which — water is held on soil particles, or the water-retention properties of soils. One of the devices used in the field to measure this energy is the tensiometer. It consists of a porous ceramic cup connected through a tube to a mercury manometer, with all parts filled with water (Hanks and Ashcroft 1980; Taylor and Ashcroft 1972).

Equipment

1 Various types of tensiometers are available from different suppliers. They can be custom-made if such components as porous cup, PVC tube, thick vinyl tubing, graduated scale, and mercury are available.

2 Installation tube of similar diameter to the porous cup.

3 Distilled water in a water bottle.

Principle

The basic principle in tensiometry is that water moves from a region of higher free energy (wet soil) to that of lower free energy (dry soil). After the tensiometer has been installed in the field for some time, the films of water in the soil near the cup come in hydraulic contact with the bulk water inside the cup through pores in the cup wall. If the water pressure in the cup is greater than that of the soil water, water in the cup will flow through the wall into the soil until the pressure in the tensiometer is equal to that in the soil water. On the other hand, if the water pressure is higher in the soil than in the cup, soil water will enter the cup until both pressures are equal. When this happens, soil matric potential can be measured by determining the water pressure in the cup, and calculated from the mercury levels in a manometer attached to the tensiometer, from pressure gauges, or by using a pressure transducer (Hanks and Ashcroft 1980; Taylor and Ashcroft 1972).

Procedure A: Testing of tensiometer

Prior to its installation, each tensiometer should be tested as follows:

1 Fix the tensiometer on a laboratory stand with the porous cup facing down.

2 Add mercury to the mercury well or bottle and dip the manometer end (vinyl tube) into the mercury.

3 Fill the tensiometer with distilled water completely, and apply pressure at the open end of the tensiometer so that water is forced through the manometer tubing until all bubbles escape from the tube.

4 Close the top end of the tensiometer tube with a stopper and let the water evaporate from the ceramic cup wall. If required, use a fan to accelerate evaporation from the cup and create a suction in the system.

5 After 1 or 2 days the manometer should show a suction equivalent to 0.08 MPa or more. This will confirm no leakage of air into the tensiometer system.

6 While the instrument shows a reading of 0.08 MPa or more, submerge the cup in water. The reading should respond downward within a few seconds and should approach zero within 3–5 min. This test ensures that the cup conductance is adequate and the tensiometer is ready for installation and use in the field.

Procedure B: Installation and measurement

1 Select the site and depth for the tensiometer to be installed.

2 With the installation tube, carefully make a hole that is smaller than the diameter of the ceramic cup at the measuring point.

3 Slowly insert the ceramic cup and the tube into the hole, and fill any gaps around the outside wall with soil to avoid surface water seepage.

4 Fill the tube connected to the ceramic cup and the capillary tube with water. Pass air-free water through the tube and the ceramic cup until no air bubbles remain. Measure the depth of insertion of the ceramic cup and the height of the lower edge of the mercury manometer above ground.

5 Read the tensiometers at the same time during the day.

Calculations Let Z be the distance from the top of the mercury column to the center of the ceramic cup (see Fig. 3). A second distance, Z_{Hg}, is defined as that from the top of the mercury column to the surface of the mercury in the reservoir. Taking the top of the manometer as the reference line (see Fig. 3), the distribution of pressure at equilibrium on the two sides of the tensiometer is given as

$$-X - Z + \Psi = -X - Z_{Hg}\,(\rho_{Hg}/\rho_w) \quad (1)$$

in which X is the distance from the reference line to the top of the mercury column, Ψ is the soil matric potential, ρ_{Hg} is the density of mercury (13.6 g cm^{-3}), and ρ_w is the density of water (1.0 g cm^{-3}). The value of X on both sides of the equation cancels out. By rearranging eqn (1), and substituting the densities, we obtain

$$\Psi = -13.6\,Z_{Hg} + Z. \quad (2)$$

The distance, Z, varies as the height of the mercury column, Z_{Hg}, changes. If, however, we consider the distance from the surface of the mercury reservoir to the center of the cup, Z_0, we have a constant for any given tensiometer. Substituting $Z = Z_0 + Z_{Hg}$ into eqn (1) gives

$$\Psi = -Z_{Hg}\,(\rho_{Hg}/\rho_w) + Z_{Hg} + Z_0$$

which can be written as

$$\Psi = -Z_{Hg}\,[\rho_{Hg}/\rho_w - 1] + Z_0.$$

And substituting for the densities gives

$$\Psi = -12.6\,Z_{Hg} + Z_0.$$

Because mercury is expensive and its vapor may be injurious to humans,

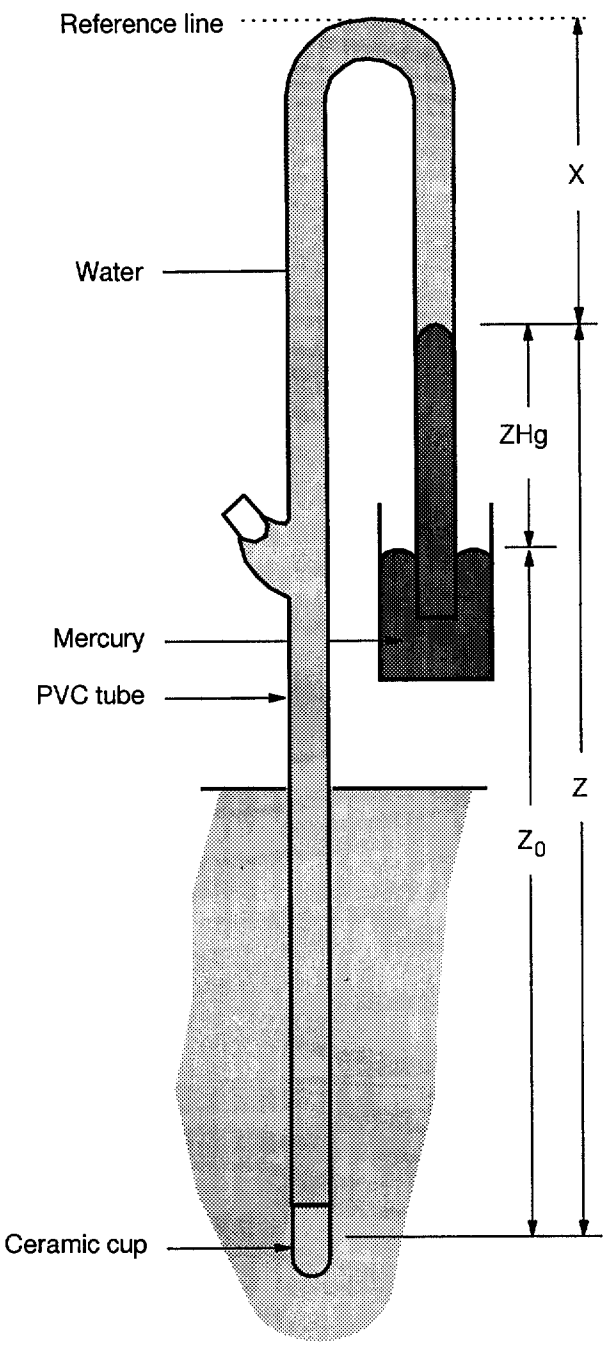

Figure 3 — Schematic diagram of a tensiometer at equilibrium with soil water.

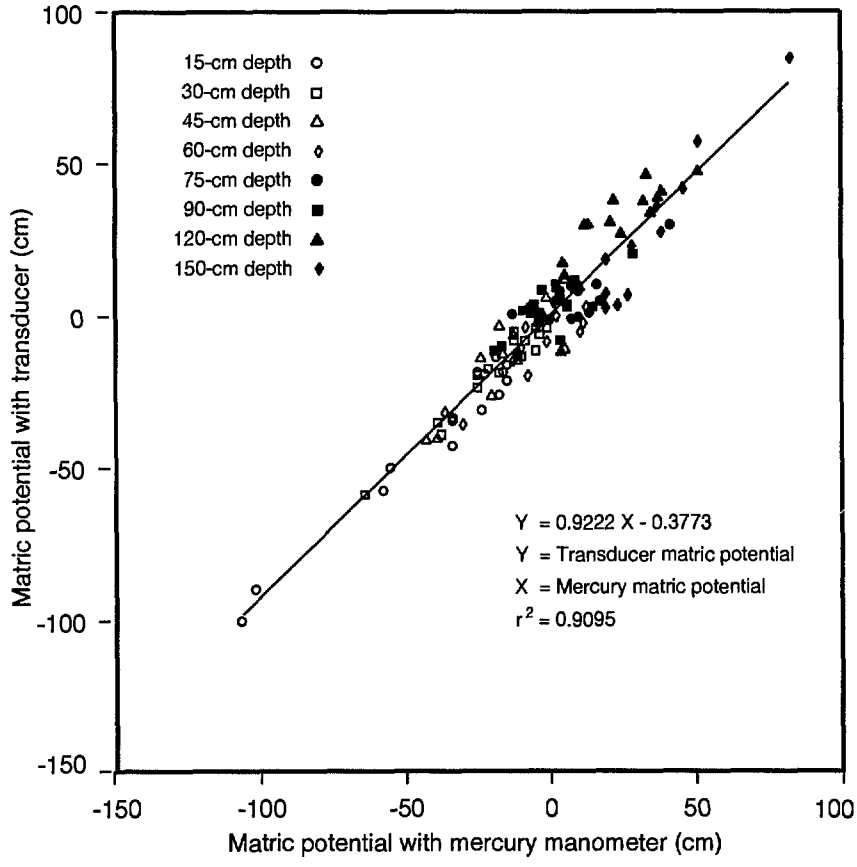

Figure 4 — Compared measurements of matric potential using a transducer and a mercury manometer.

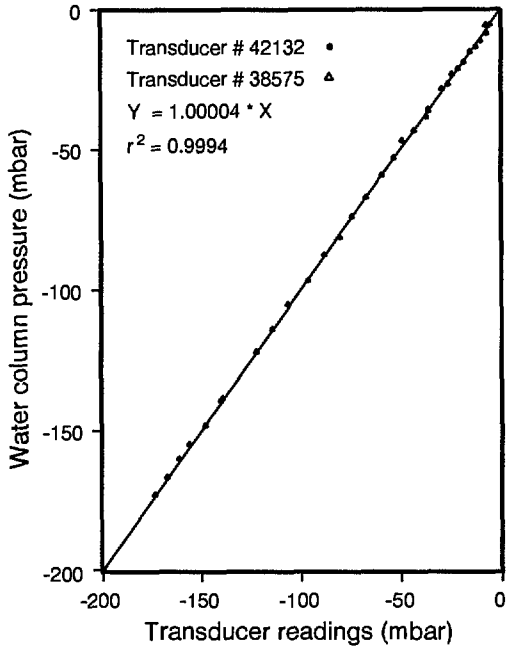

Figure 5 — Calibration curve for transducers # 42132 and # 38575 using a column of water.

various devices (the pressure transducer and pressure gauge) have been used lately to replace mercury manometers. In the transducer method, a septum stopper is placed at the upper end of the tensiometer. The transducer is placed over the septum stopper and pushed down so that the needle attached to the transducer penetrates the septum stopper. The output from the digital readout is then recorded. Since the transducer readings are in mbar units, the matric potential Ψ (cm) is

$$\Psi = (-p * 1.022) + z + y$$

where p is the pressure transducer readings in mbar, z is the depth of tensiometer cup from the soil surface, and y is height of water column in the tensiometer above the soil surface.

When pressure transducers are used, make sure that they have been checked for their calibration. This can be done by taking transducer readings of matric potential and comparing them with matric potentials determined using the mercury

manometer (Fig. 4). For low suctions, the transducer readings can be compared with water column pressure (Fig. 5) created by applying suction to the system shown in Figure 6.

Example Given that the distance from the surface of the mercury reservoir to the center of the ceramic cup (vertical distance) is 20 cm, and the value of Z_{Hg} is 14.2 cm (see Fig. 3), find the matric potential. Solution:

$$\Psi = -12.6\, Z_{Hg} + Z_0 \quad = -12.6 \times 14.2 \text{ cm} + 20 \text{ cm}$$

$$= -179 \text{ cm} + 20 \text{ cm} = -159 \text{ cm}.$$

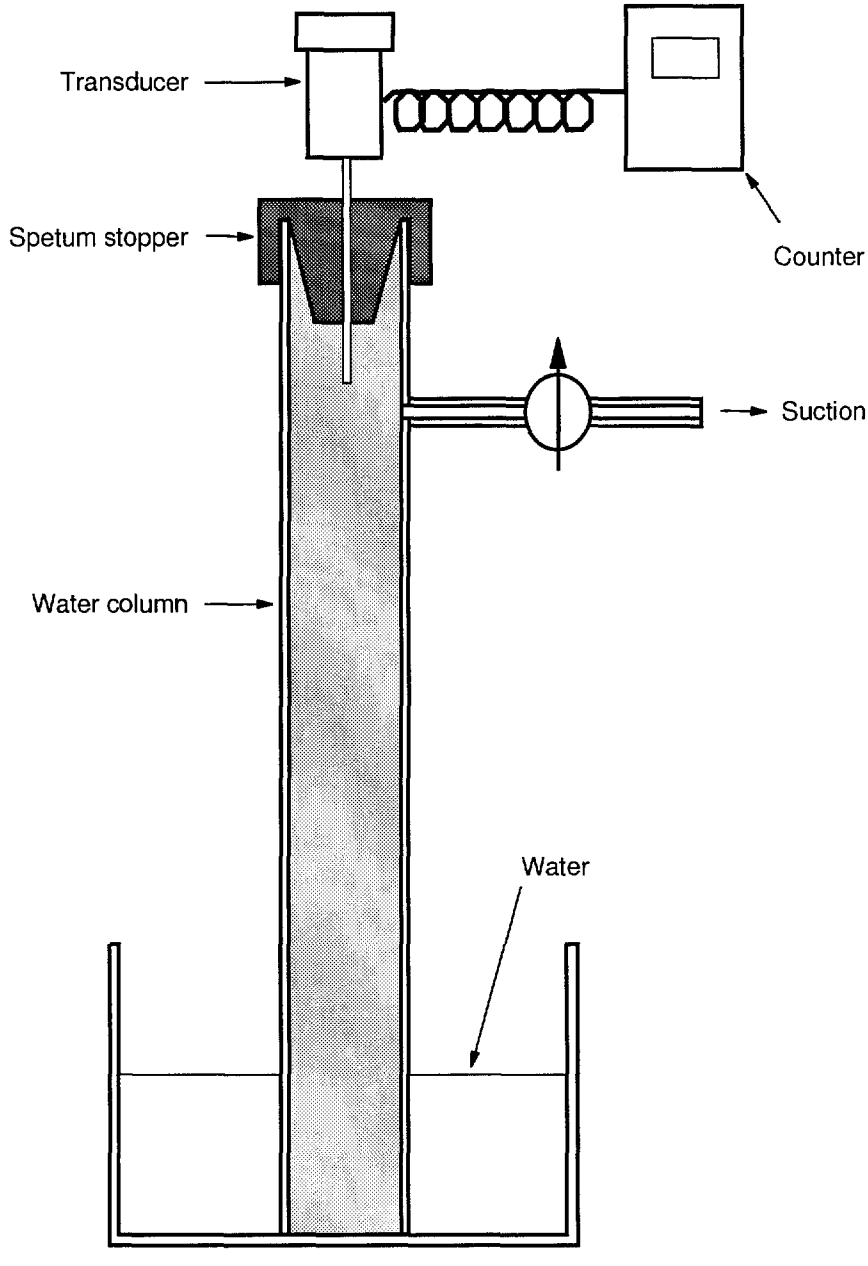

Figure 6 — Schematic diagram of equipment for calibrating pressure transducer readings in matric potential measurement.

Notes

1 Check the tensiometers regularly to ensure they are operating. The water level should be checked and replenished regularly.

2 Protect the tensiometers in the field from animals and trespassers.

3 Tensiometers have a definite limitation in the range of values they can measure. The highest reading theoretically possible is 1.0 atmosphere, but the practical limit is about 0.8 atmosphere.

4 Tensiometers are not sensitive to osmotic effects of salts in the soil solution.

Soil Moisture Characteristics using the Pressure Plate Apparatus

Introduction

It is important to know the potential storage of moisture in soils and its release characteristics in order to assess water uptake by plant roots with decreasing soil water content or increasing soil water suction. Soil moisture characteristics, or water retention curves for soils with different textures and structures, can be determined in the laboratory by using a pressure plate apparatus (Klute 1986; Taylor and Ashcroft 1972).

Equipment A: Pressure chambers

The nature of the apparatus required will depend upon the range of matric suctions to be used. In general, the higher the suction the higher the bubbling pressure requirement of the porous plate, and the greater the strength requirements of the pressure chamber. Three systems are used, each suited to a given range of measurement (Klute 1986):

1 *Low-range system*. This is especially suited to measurements in the matric suction range 0 to approximately 2.0×10^{-3} MPa cm of water. The major components of the system are (a) the sample chamber, (b) the cell pressure-control system, and (c) the suction control system. The cell may be operated in suction mode, in pressure mode, or in combined pressure-suction mode. The pressure in the chamber is conveniently measured with a water manometer up to about 8.0×10^{-3} or 1.0×10^{-2} MPa of cell pressure, and beyond that with a mercury manometer.

2 *Mid-range system*. This is suited to measurements in the matric suction range 2.0×10^{-2} to 0.1 MPa of water. The porous plate is ceramic, with a bubbling pressure of at least 0.1 MPa of water (1 bar).

3 *High-range system*. The measurement range of this system is from 0.1 to 1.5 MPa (1–15 bar) suction. The essential components are (a) a pressure chamber, (b) a ceramic plate with a bubbling pressure of at least 1.5 MPa, and (c) a gas pressure supply and regulation system capable of pressure regulation to 1.5 MPa.

Equipment B: Other apparatus

Core sampler, sample retainer rings, spatula with a wide blade, plastic discs, soil moisture cans, balance, and oven.

Principle

When positive air pressure is applied to a saturated soil sample placed on a sintered plate or membrane (the bottom of which is at atmospheric pressure), the water which is held in the soil is desorbed until it comes into equilibrium with the applied pressure. At equilibrium, the suction at which the water is held in the soil is equal to the applied pressure.

Procedure The procedure below is oversimplified, and it is assumed that the user has a good knowledge of the equipment and how it works (Klute 1986).

1. Take soil core samples from various layers of the soil profile using a 5-cm diameter core sampler of 0.5 or 1.0 cm height. Bring the core samples to the laboratory safely and trim flat the extra soil on both ends of the rings with a knife. Preserve these cores safely in soil moisture cans.
2. Wet the plates for 12–24 h.
3. Place the plates in a tray for wetting the soil samples.
4. Place the core samples on the plates and make sure that the soil cores are in good contact with the plate. This facilitates slow wetting of the soil samples from below. Spread a thin layer of soil slurry (fine material), if required, for better contact of the cores with the plate.
5. Add water to the tray slowly, to wet the soil samples from below, such that the plate has a thin layer of standing water. Leave the samples to wet fully overnight.
6. Next day, place the plates together with the samples in the pressure chamber apparatus.
7. Place the lid over the pressure chamber and bolt it tightly.
8. Apply pressure as required and record the time. Equilibration is usually reached in about 3 days for low pressures and 5 days for high pressures.
9. When the extraction is complete, close the drainage pipe and remove the core samples.
10. Weigh the samples before and after oven-drying for 24 h at 105°C and calculate the gravimetric moisture content.

Calculations Calculate the gravimetric water content, θ, and bulk density, ρ_b, of each sample from

$$\theta = (W_w - W_d) / (W_d - W_c)$$

$$\rho_b = (W_d - W_c) / V_t$$

where W_w = weight of wet sample plus can weight, W_d = weight of dry sample plus can weight, W_c = can weight, and V_t = volume of the soil core.

Notes

1. Use three to four cores for each soil depth or treatment as replication.
2. Make sure that pressure is applied to the pressure chamber slowly after closing the chamber. Also release pressure slowly before opening the chamber.
3. Make sure that the pressure chamber measurements are done in a room with minimum temperature fluctuations.
4. Select the pressure chamber system and the porous plates depending upon the range of pressures to be applied.
5. Cover the samples with several layers of moist towel.
6. If repacked cores are used, a bulk density must be chosen to match the in-situ bulk density.

References

APSRU (Agricultural Production System Research Unit). 1995. Data collection for crop simulation modelling. Queensland, Australia: Commonwealth Scientific and Industrial Research Organization. 43 pp.

Hanks, R.J., and **Ashcroft, G.L.** 1980. Applied soil physics. Soil water and temperature applications. Advanced series in agricultural review 8. New York, USA: Springer-Verlag. 60 pp.

Klute, A. (ed.) 1986. Methods of soil analysis. Part 1: Physical and mineralogical methods. 2nd edn. Madison, WI, USA: American Society of Agronomy and Soil Science Society of America. 1188 pp.

Taylor, S.A., and **Ashcroft, G.L.** 1972. Physical edaphology. The physics of irrigated and nonirrigated soils. San Francisco, USA: W.H. Freeman and Co. 533 pp.

Topp, G.C., and **Davis, J.L.** 1985. Time domain reflectrometry (TDR) and its application to irrigation scheduling. Advances in Irrigation 3:107–127.

Topp, G.C., Davis, J.L., and **Annan, A.P.** 1980. Electro-magnetic determination of soil water content: measurements in axial transmission lines. Water Resources Research 16:574–582.

Topp, G.C., Davis, J.L., and **Shinnlek, J.H.** 1983. Using TDR water content measurements for infiltration studies. Pages 231–240 *in* Proceedings of the National Conference on Advances in Infiltration, 12–13 Dec 1983, Madison, USA. Madison, WI, USA: American Society of Agricultural Engineers.

Soil Structure

N K Awadhwal

Introduction

There is no universally accepted definition of soil structure. The arrangement of the individual soil particles and pores with respect to each other may be called soil structure. It may also be defined as the arrangement of small, medium, and large soil pores into a structural pattern.

Soil structure influences practically all plant growth factors, such as water supply, aeration, plant nutrient availability, and microbial activity. Consequently, poor soil structure may indirectly limit plant growth. On the other hand, good soil structure facilitates soil processes, and therefore permits optimum plant growth.

The stability of structure refers to the resistance that soil aggregates offer to the disintegrating influence of water and/or mechanical manipulation. Aggregate stability is important in ensuring and preserving good structure in soils. Aggregate stability varies greatly according to the way soils withstand raindrop impact or hydrostatic forces under submergence. Structural stability depends upon the clay content, type of clay, concentration of mono- and di-valent cations in soil solution, the organic-inorganic linkages, the decomposition products such as polyssacharides and polyurinides from micro-organisms, and the presence of mineral-cementing materials, such as iron and aluminum oxides.

Soil structural stability can be evaluated by determining the size and stability of aggregates, the distribution of pore sizes (Danielson and Sutherland 1986), and the bonding of soil particles or soil strength. Wet-sieving has been used extensively to determine size distribution of aggregates and their stability (Kemper and Rosenau 1986). The high-energy moisture characteristics under quick- and slow-wetting procedures have been used to estimate size distribution and stability of the pores within and between aggregates. Penetration resistance of the soil measures an aspect of cohesiveness and compaction. Methods for measuring these aspects of soil structure are described below.

Wet-Sieving Method for Measuring Water-Stable Soil Aggregates

Equipment Nests of sieves (12.5 cm in diameter and 5 cm in height) with mesh numbers 4, 9, 16 and 25 (i.e., hole widths 4.76, 2.00, 1.00, and 0.21 mm, respectively), plus one 2.5-mesh screen with a hole width of 8 mm, and a Yoder-type sieving machine (Yoder 1936), which raises and lowers the nests of sieves through water approximately 30 times per minute, and mechanical stirrers.

Principle Aggregate analysis by wet-sieving aims to measure the water-stable secondary particles in the soil and the extent to which the finer mechanical separates are aggregated into coarser fractions. There are several ways to express the aggregation of soils. van Bavel (1949) introduced the mean weight-diameter (MWD) of soil aggregates as an index of aggregation. MWD is equal to the sum of products of the mean diameter, x_i, of each size fraction and the proportion of the total sample weight, w_i, occurring in the corresponding size fraction. The summation is done over all size fractions, including the one that passes through the finest sieve. MWD is expressed as

$$MWD = \sum_{i=1}^{n} x_i . w_i \qquad (1)$$

Procedure

1 Collect the sample when the soil is in a friable state. Sieve it through an 8-mm (2.5-mesh) screen. Pull apart clods larger than 8 mm until their subunits are small enough to go through the sieve, breaking the large clods so that practically all the subunits are retained on a 4-mesh (4.76 mm) screen. Avoid compacting or powdering the soil during sampling and transportation.

2 Air-dry the sample at room temperature. Weigh three representative 25-g subsamples. Oven-dry and weigh one sample. Assume that the other two subsamples contain the same amount of oven-dry soil. Use the two samples not oven-dried as duplicates in the following determination.

3 Wet the samples at atmospheric pressure by filling the container in which sieving is to take place with salt-free (less than 10^{-5} mmhos cm^{-1}) water at a temperature between 20° and 25°C, to a level below that of the screen in the top sieve. Distribute the air-dry sample evenly over the top sieve. Immediately prior to sieving, raise the water level rapidly to a point where it barely covers the sample when the sieves are in their highest position. Allow less than 3 s to elapse between the time the water first touches the sample and the time it completely covers the sample.

4 Begin sieving approximately 10 min after the samples are wetted. Sieve the samples for 10 min. Remove the sieves from the water and determine the oven-dry weight of the material on each sieve.

5 Part of the material on each sieve is usually sand which would be too large to go through the sieve. Determine the amount of sand in the soil fraction on each sieve by dispersing the material with dispersing agent and a mechanical stirrer, washing the material through the sieve, which then retains the sand larger than the sieve holes. Then oven-dry the sand and weigh it.

6 Determine the weight of aggregates in each sieve by subtracting the weight of the sand that is retained on the sieve from the weight of the oven-dry material retained after the first sieving.

7 Calculate the quantity of material smaller than 0.21 mm by subtracting the sum of the oven-dry weights of material retained on each sieve from the oven-dry weight of the original sample.

Calculations

1 Divide the weight of aggregates in each of the five size classes by the weight of the oven-dry sample minus the weight of the sand remaining on all the sieves, to obtain a fraction for each size class.

2 Calculate the mean weight-diameter (MWD) using eqn (1).

3 The data can also be expressed in terms of the geometric mean diameter (Gardner 1956). However, this method of representation is not recommended for general use because of the extensive work of calculating the results. For most practical work, the MWD gives an adequate basis for comparison.

Notes

1 One of the main sources of variation is in the sampling procedure at the point where lumps of soil greater than 8 mm are broken into aggregates to pass through the 8-mm sieve. If a large portion of the lumps is broken to pass the 4.76-mm sieve, the MWD will be considerably lower than its value.

2 Another source of variation is segregation of the sample if the aggregate size distribution in the subsamples is not representative. This variation can be decreased by counting the large-aggregate sizes in the dry subsamples and making sure that there are approximately the same number of large aggregates in each subsample.

3 Rewetting procedure is another source of variation. Procedures for different wetting methods are discussed by Kemper et al. (1985). It is important to note that wetting under tension or vacuum gives different results from the method discussed above. The coefficient of variation of the MWD for replicate subsamples should be less than 7% if reasonably good care is taken to follow the wetting procedure.

Assessing Soil Structural Stability using the Moisture Characteristic Curve

A method for assessing the stability of soil aggregates was introduced by Childs (1940, 1942). This method involves the disruptive forces associated with quick wetting. Childs defined the comparative changes in aggregate structure, after quick and slow wetting, by means of the changes in pore size distribution. This technique is based on interpretation of the high-energy part of the drainage moisture characteristic. Here high energy refers to matric potential from slightly greater than zero to approximately −60 cm water.

The extent of disintegration of aggregates due to quick wetting can be evaluated by means of a series of moisture characteristics (using the method described below). The values of the equivalent pore neck radius for the most common pore can be obtained by plotting the slope of the moisture characteristic curve versus matric potential (differential of

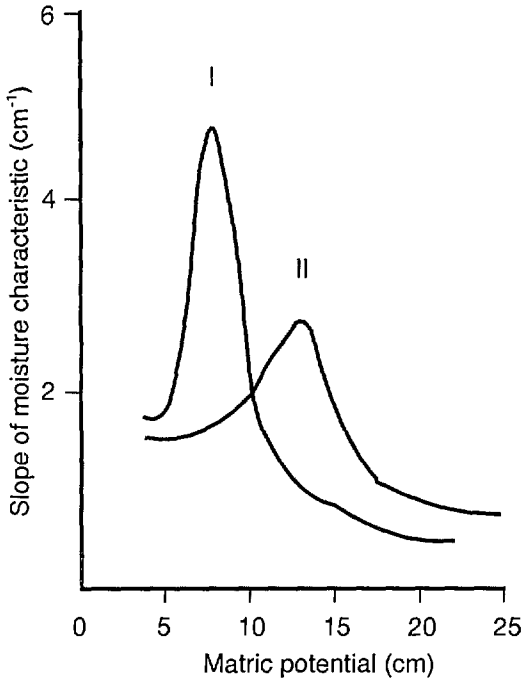

Figure 1 — Differentials of moisture characteristic for a clay soil, after slow wetting (I) and quick wetting (II).

moisture characteristic). A concentration of pores is shown by the presence of a peak in the differential of moisture characteristic at a matric potential Ψ, which is related to the equivalent pore neck radius, r, by the equation

$$\Psi = 2\tau/r \qquad (2)$$

where τ is the surface tension of the soil water.

Figure 1 illustrates a set of such curves for slow and quick wetting. Curve I for slow wetting, shows that the group of the most common pores is distributed about a peak at a large radius. However, after quick wetting (curve II) the pores are distributed about a peak at a smaller pore radius. The ratio of the equivalent pore neck radius after quick wetting to that obtained by slow wetting is nearly unity for stable aggregates. The ratio decreases with increasing lack of aggregate stability. Collis-George and Laryea (1972) reported that the ratio of equivalent pore neck radius was 1.0 for a stable Australian soil (Mt Wilson) and 0.38 for an unstable soil (Narrabri).

Hanging Water Column Method to Determine Moisture Characteristic

Equipment This comprises a Büchner funnel with porous plate connected to a burette by means of a flexible tube (Fig. 2). The funnel (C) should be of sufficiently fine porosity to preclude air entry over the range of negative pressures (porosity 3 for this test). The flexible transparent tubing (D) should be moderately rigid to avoid undue collapse under the negative pressure. Select a burette (E) having a capacity of at least 30% and calibration in units not more than 0.1% of the volume of the sample. For example, if the sample volume is 100 mL, a 50-mL burette calibrated to 0.1 mL would be appropriate.

Principle A moisture characteristic curve relates the soil water content in equilibrium with the suction forces applied to drain or to wet the soil. The capillary-rise equation, upon which pore-size calculations are based, is

$$h = (2\gamma \cos \theta)/\rho g r \qquad (3)$$

where h is the height of rise in a capillary tube with radius r, γ is the surface tension of water with density ρ, g is the acceleration due to gravity, and θ is the contact angle between water and soil pore (assumed to be zero). Since cos 0 = 1, eqn (3) simplifies to $h = 2\gamma/\rho g r$, which upon rearrangement and introduction of surface tension at 20°C reduces to the usable expression

$$d = 3/\Psi \qquad (4)$$

where d is the diameter of the pore in millimeters and Ψ (=$h\rho g$) is the matric potential of the soil water. The volume of water removed from a

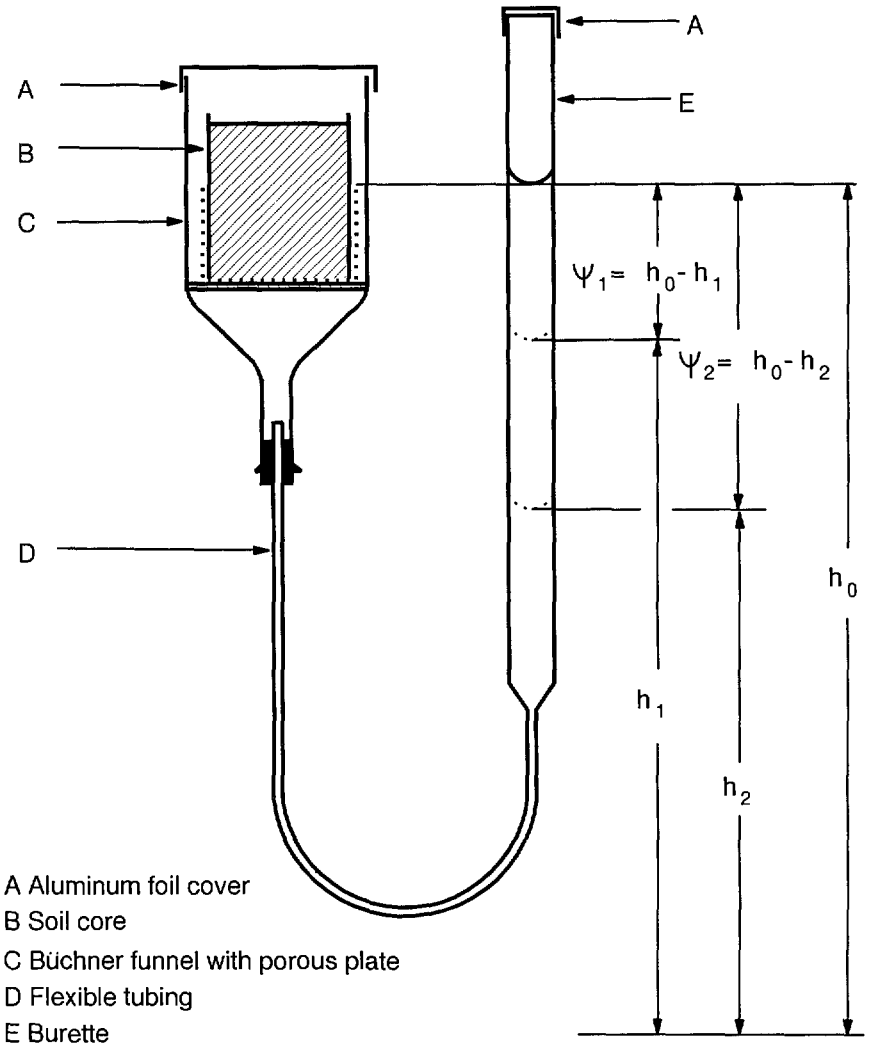

Figure 2 — Schematic diagram of apparatus for determining pore-size distribution.

given volume of soil at a specified matric potential or suction represents the volume of pores of the size indicated by that tension (Vomocil 1965).

Procedure

1 Submerge the assembly (Fig. 2) in deaerated distilled water in order to remove the air from the porous plate, the space below the plate in the funnel, and the tube leading to the burette. Allow it to remain overnight, and then pump the air out with an aspirator or vacuum pump attached to the plastic tube, so that water enters through the plate.

2 Support the plate funnel upright, and the burette vertically in such a way that the flexible tube will form a U tube. Adjust the quantity of water in the system to allow the water level in the burette to stand within the calibrated volume but near its bottom end, when free water has drained from the surface of the porous plate.

3 Prepare the soil sample for slow and quick wetting in the following manner. First sieve air-dry soil to pass through a 2-mm round-holed sieve.

4 For slow wetting, pour a known mass of air-dry soil and, by tapping gently to form a layer 1 cm thick on the surface, pack the sintered glass Büchner funnel maintained at –30 cm suction.

5 Wet the soil slowly by increasing the matric potential from –30 to zero in 3-cm steps. Once free water appears on the surface of the soil, the drainage moisture characteristic can be determined.

6 For quick wetting, pour a known mass of soil into the sintered glass Büchner funnel, which contains 2 cm free water. Tap the funnel gently to pack the sample and determine the drainage moisture characteristic.

7 This characteristic is determined as follows: Position the burette water level at 1–2 cm below the plate to drain free water from the plate. When flow ceases, position the burette so that the water level coincides with the center of the soil sample, and record the initial volume of water in the burette (v_0) and initial water level (h_0).

8 Lower the burette so that its water level is 5 cm below the center of the sample. Allow drainage to proceed until it can no longer be detected. This may require 10–15 min, depending on the sample.

9 When the volume of water in the burette remains constant, record the burette reading (v_1) and the vertical distance (h_1) from the surface of water in the burette to the center of the soil sample.

10 Proceed to the next desired suction level (e.g., 10 cm of water), and repeat as above. Note that, as suction increases, the time allowed for drainage will probably have to be increased.

11 Depending on the nature of pore-size distribution in soils, make the suction increments relatively small at low suction, and large with increasing suction.

12 Continue increasing suction until suctions near the air-entry point of the sintered funnel are achieved (i.e., 80 cm for porosity 3, 100–120 cm for porosity 4, and 120–150 cm for porosity 5 of sintered plates).

13 Carefully scoop all the moist soil from the sintered funnel and determine the gravimetric moisture content, as described in the section on moisture content measurement.

Calculations

1 To determine the soil water content, suppose the mass of the container = x, mass of container + wet soil = y, and mass of container + oven dry soil = z, then

mass of water in sample = y–z

mass of oven-dry soil = z–x

gravimetric moisture content of soil $\theta_{gf} = (y-z)/(z-x)$

where f denotes the matric action of f cm at the final drainage step.

Table 1 — Calculation of gravimetric water content of soil at different suctions.

Height	Volume	Δ Volume	Matric potential	Volume of water in sample	Gravimetric water contents
h_0	v_0	-	0	$w_0 = w_1 + \Delta v_1$	$w_0/z-x$
h_1	v_1	$\Delta v_1 = v_0-v_1$	$\psi_1=h_0-h_1$	$w_1 = w_2 + \Delta v_2$	$w_1/z-x$
h_2	v_2	$\Delta v_2 = v_1-v_2$	$\psi_2=h_0-h_2$	$w_2 = w_3 + \Delta v_3$	$w_2/z-x$
h_3	v_3	$\Delta v_3 = v_2-v_3$	$\psi_3=h_0-h_3$	$w_3 = w_4 + \Delta v_4$	$w_3/z-x$
h_4	v_4	$\Delta v_4 = v_3-v_4$	$\psi_4=h_0-h_4$	$w_4 = w_5 + \Delta v_5$	$w_4/z-x$
...	...	...	...	...	...
h_{79}	v_{79}	$\Delta v_{79} = v_{78}-v_{79}$	$\psi_{79} = h_0-h_{79}$	$w_{79} = w_{80}+\Delta v_{80}$	$w_{79}/z-x$
h_{80}	v_{80}	$\Delta v_{80} = v_{79}-v_{80}$	$\psi_{80} = h_0-h_{80}$	$w_{80} = (y-z)$	$(y-z)/z-x$

2 Calculation of the matric potential and the gravimetric water content of the soil at different suctions is shown in Table 1. Start with the final height of water in the burette, h_{80}, and the final volume of water in the burette, V_{80}, and, using the differences in water released at each drainage step, calculate the water content in the soil for each step.

3 Plot a curve of gravimetric water content of soil (θ_g) as a function of matric potential (ψ) for the slow wetting and then for the quick wetting moisture characteristic.

4 Determine the slope $\Delta\theta/\Delta\psi$ of the two curves at different matric potentials.

5 Plot the slope values versus matric potential to obtain the differential of moisture characteristic (Fig. 1).

6 Use eqn (4) and the moisture potential corresponding to the peak of each curve to calculate the mean pore-neck radius.

Notes The main sources of error in the method described are:

1 The sample may not have been saturated fully.

2 Excessive evaporation losses may have occurred during the drainage steps.

3 At higher values of suction, an arbitrary decision must be made as to when a given drainage step shall be considered complete.

Penetration Resistance

Root penetration into soil has been associated with penetration resistance (mechanical impedance) registered by penetrometers. Similarly, seedling emergence has been associated with the mechanical impedance due to the weight of soil on seedling and crust strength. A cone penetrometer is used to measure penetration resistance of soil at different depths, whereas pocket penetrometers are used to determine penetration resistance of soil-surface crusts.

Cone penetrometer

Equipment The cone penetrometer (Fig.3) consists of a handle, proving ring and dial gauge, 100-cm rod graduated at 10-cm intervals, and a stainless steel cone. The cone has a base area of 6.45 cm^2 (or 3.2 cm^2) and has a tip angle of 30 or 60 degrees.

Principle The applied force required to press the cone penetrometer into soil is an index of the shear resistance of the soil, and is called the cone index (ASAE 1982). Cone indexes taken at different depths permit the plotting of a "cone index curve", which is a plot of penetration force versus depth of penetration. The curve gives quantitative information on soil strength, or soil compactness, that can be correlated with other soil physical properties and/or with crop yields. A penetrometer can measure the cone index continually from the surface to the full depth of the rod (about 50 cm) without a soil pit having to be dug.

Procedure

1. Select the test location and prepare a flat, clean soil surface for the penetration.
2. Set the dial gauge to the zero position. Hold the penetrometer in a vertical position and push the cone point slowly downward into the soil at a uniform rate (it should take about 15 s to reach a depth of 60 cm).
3. Take readings of the dial gauge at desired vertical increments of 5 or 10 cm (when the base of the cone is at ground level).

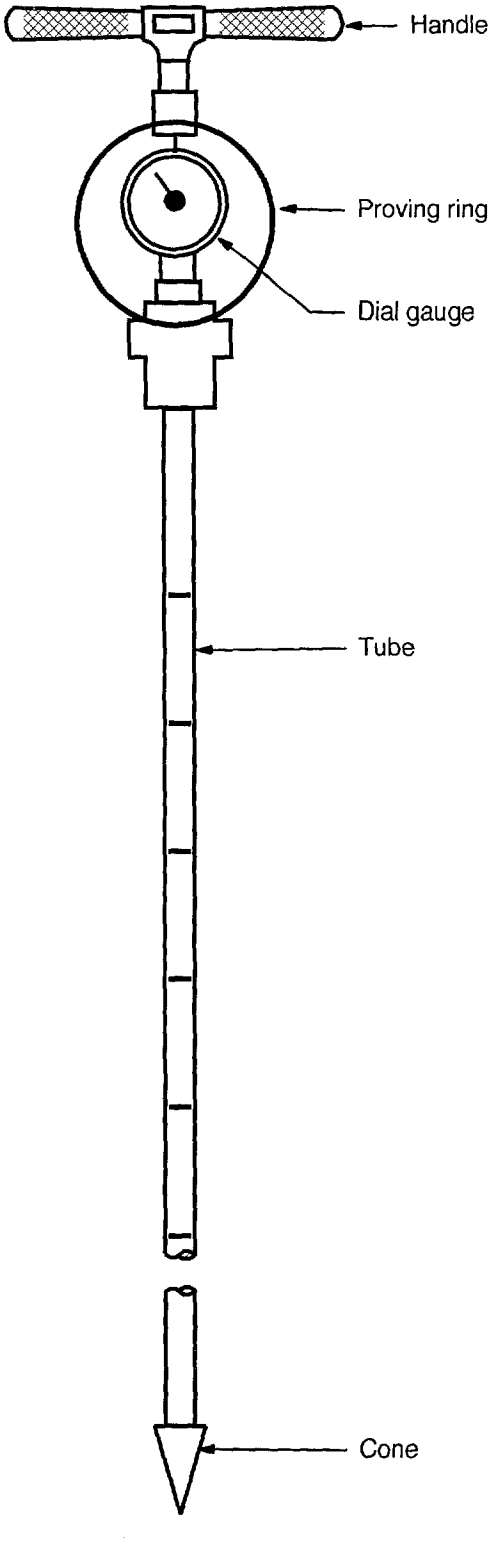

Figure 3 — Schematic diagram of a cone penetrometer.

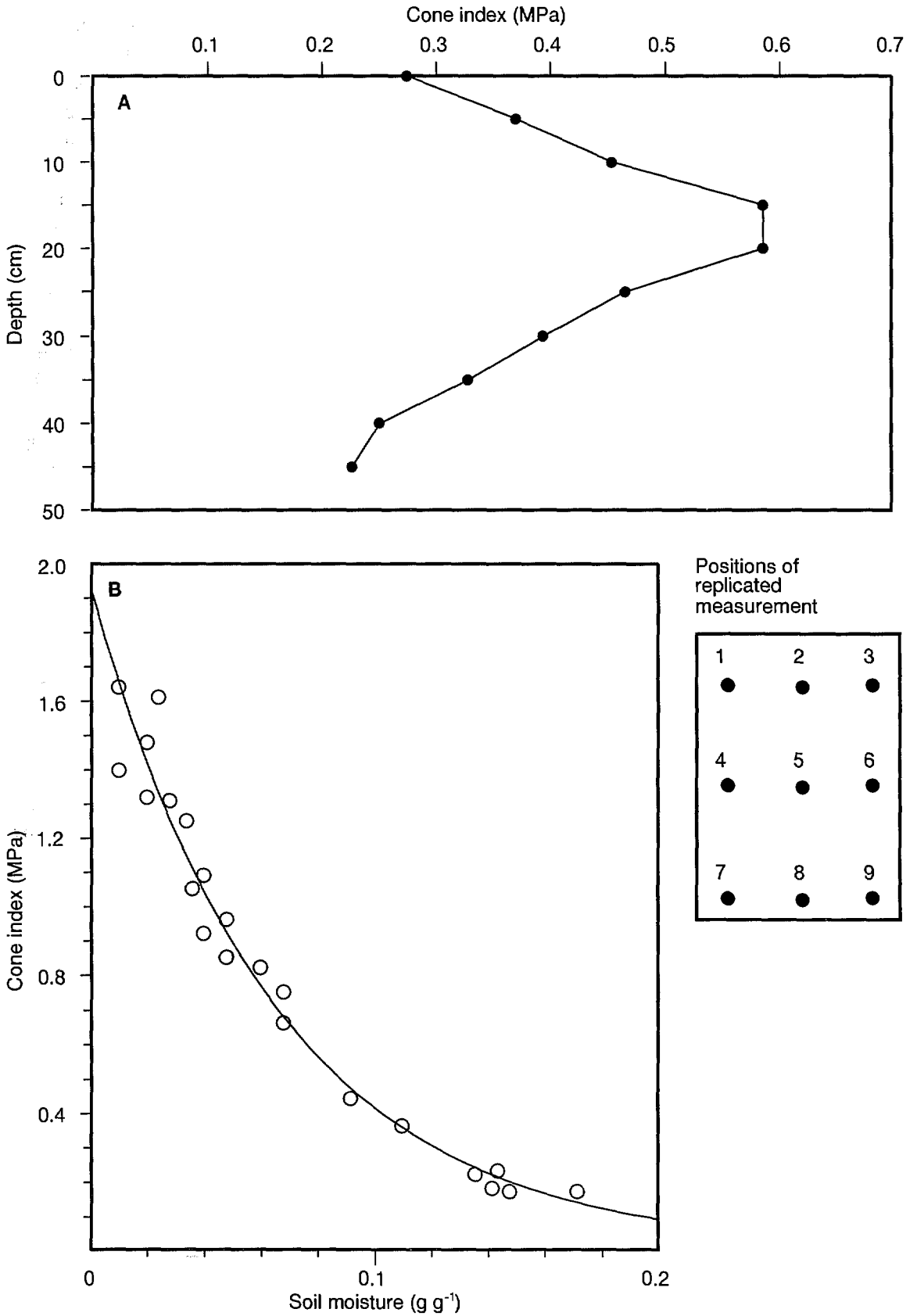

Figure 4 — Cone index variation with soil depth (A) and soil moisture (B).

4 Repeat the determination several times at each location investigated to obtain at least three sets of consistent and reliable readings.

5 Space the individual penetrations so that they do not interfere with one another; but they should not be too far apart because variation in reading could occur due to spatial variation in the soil strength characteristics.

6 Average the dial readings obtained at each depth increment for at least three penetration tests. The rod and cone should be wiped clean after each penetration.

7 Measure soil moisture at different depths because it strongly affects the cone index.

Calculations

1 Convert the dial-gauge reading, r (mm), for each depth, to a corresponding force value (N) using the calibration curve established between the dial-gauge reading and the applied force F (N).

2 Then calculate the cone index CI (in MPa) using the following equation, which allows for the mass, W (kg), of the penetrometer:

$$CI = \{(F + W \times 9.806)/A\}/100 \quad (5)$$

or

$$CI = \{(Kr + W \times 9.806)/A\}/100 \quad (6)$$

where A (cm^2) is the cone base area, and K ($N\ mm^{-1}$) is the response coefficient of the dial gauge.

3 Plot the cone index curve for the test location (penetrometer force in kg on the X axis; depth of penetration in cm on the Y axis) as shown in Figure 4. The relation between cone index and depth can also be presented in tabular form (as in Table 2).

Table 2 — Sample datasheet for cone penetrometer readings and equivalent cone index.

	Dial-gauge reading, r (mm)											Equivalent cone index (MPa)
Depth (cm)	1	2	3	4	5	6	7	8	9	Total	Average	Cone index[1]
0	1.20	0.75	0.80	1.00	1.20	0.65	0.65	0.40	0.61	7.26	0.81	0.28
5											1.07	0.37
10											1.32	0.46
15											1.69	0.58
20											1.70	0.59
25											1.36	0.47
30											1.14	0.40

1 Cone: 6.4 cm^2; 30°.

Notes The cone index is affected by soil water content and by soil management. Measurements of the index depend on the cone base area (the larger the area, the lower the index), penetration speed (the higher the speed, the larger the index), and friction between the soil and the rod (the greater the friction, the larger the index). The tip angle of the cone, soil moisture, texture, and structure also affect the cone index.

Pocket penetrometer

Equipment The pocket penetrometer (Fig. 5) is a hand-operated, spring penetrometer. The deformation of the spring, as the piston needle is pushed into soil in a prescribed manner, has been correlated with strength of soil in kg cm^{-2} (Bradford 1986). The values are calibrated directly on a scale on the piston barrel. It is commonly used to evaluate crust strength at the soil surface in cropland areas.

Direct-reading pocket penetrometers in several different models and sizes are commercially available. All have a diameter of 20 mm and a piston needle diameter of 6.35 mm (0.25 inch). Although the pocket penetrometer is considered reliable only to approximately ±20%, the test can be very useful in evaluating the strength of soils.

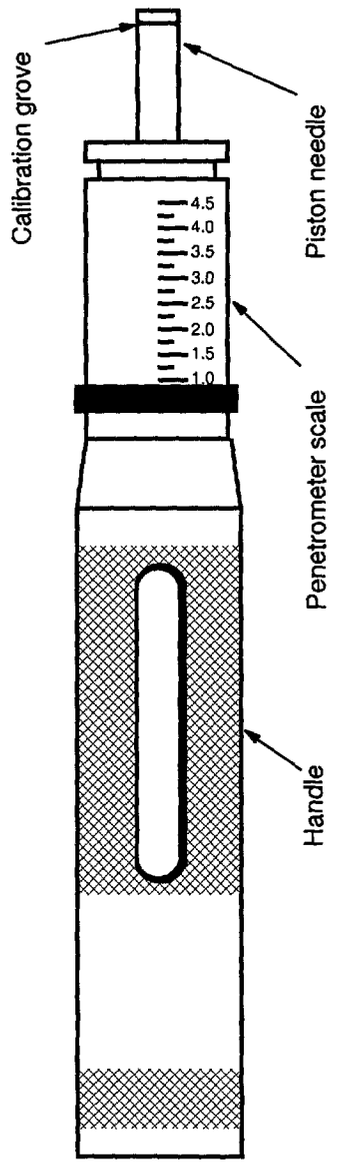

Figure 5— Schematic diagram of a pocket penetrometer.

Procedure and calculations

1 Grip the handle and push the piston needle, with steady pressure, vertically into the soil surface until penetration reaches the calibration groove (approximately 6.25 mm).

2 Read the soil strength, in kg cm^{-2}, on the penetrometer scale. In some models the scale has a sliding indicator that holds the reading when the piston is released. Clean the needle, and return the sliding indicator to its zero position.

3 Repeat the test several times in different areas to obtain an average value for soil strength.

4 The sample datasheet shown in Table 2 provides a sample calculation and valuable reference data.

References

ASAE (American Society of Agricultural Engineers). 1982. Soil penetrometer. Page 246 *in* Agricultural engineers' yearbook. ASAE Standard S3131. St Joseph, MI, USA: American Society of Agricultural Engineers.

Bradford, J.M. 1986. Penetrability. Pages 463–478 *in* Methods of soil analysis. Part 1: Physical and mineralogical methods (Klute, A. ed.). 2nd edn. Madison, WI, USA: American Society of Agronomy and Soil Science Society of America.

Childs, E.C. 1940. The use of soil moisture characteristics in soil studies. Soil Science 50:239–252.

Childs, E.C. 1942. Stability of clay soils. Soil Science 53:79–92.

Collis-George, N., and **Laryea, K.B.** 1972. An examination of the wet aggregate analysis, the moisture characteristics, and infiltration-percolation methods of determining the stability of soil aggregates. Australian Journal of Soil Research 10:15–24.

Danielson, R.E., and **Sutherland, P.L.** 1986. Porosity. Pages 443–461 *in* Methods of soil analysis. Part 1: Physical and mineralogical methods (Klute, A. ed.). 2nd edn. Madison, WI, USA: American Society of Agronomy and Soil Science Society of America.

Gardner, W.R. 1956. Representation of soil aggregate-size distribution by a logarithmic-normal distribution. Soil Science Society of America Proceedings 20:151–153.

Kemper, W.D., and **Rosenau, R.C.** 1986. Aggregate stability and size distribution. Pages 425-442 *in* Methods of soil analysis, Part 1: Physical and mineralogical methods (Klute, A. ed.). 2nd edn. Madison, WI, USA: American Society of Agronomy and Soil Science Society of America.

Kemper, W.D., Rosenau, R.C., and **Nelson, S.** 1985. Gas displacement and aggregate stability of soils. Soil Science Society of America Journal 49:25–28.

van Bavel, C.H.M. 1949. Mean weight diameter of soil aggregates as a statistical index of aggregation. Soil Science Society of America Proceedings 14:20–23.

Vomocil, J.A. 1965. Porosity. Pages 299–314 *in* Methods of soil analysis. Agronomy monograph no. 9, Part 1 (Black, C.A., ed.). New York, USA: Academic Press.

Yoder, R.E. 1936. A direct method of aggregate analysis of soils and a study of physical nature of erosion losses. Journal of American Society of Agronomy 28:337–351.

Simulation Modeling

K P C Rao

Introduction

Recent developments in computer technology have made possible the use of modeling in agricultural research. Complex systems involving a large number of variables and their interactions can now be simulated. Agricultural systems are known to be very complex and dynamic in nature, and several climatic, soil, and biological processes operate in an interactive way. Models are now available for simulating various system components (Whisler et al. 1986; Hanks and Ritchie 1991). These models present a comprehensive summary of current knowledge of the processes and interactions in such systems. Well-calibrated and validated models based on sound experimental results serve as tools in understanding the long-term effects of management options and enable the extrapolation of experimental results spatially and temporally.

PERFECT Simulation Model

Equipment PERFECT (Productivity, Erosion, and Runoff Functions to Evaluate Conservation Techniques) is a daily time-step continuous-simulation model that simulates the effects of management and environment on soil loss, soil water balance, crop growth, and yield. To run the model an understanding of the model is needed. A brief account of the model is provided below under Principle. For a detailed account of the model, users should consult relevant references cited at the end of this section.

Other requirements include an AT-compatible computer with a maths coprocessor, a hard disk with at least 3 megabytes of spare disk space, and 640K of RAM.

Principle A good description of PERFECT is given by Littleboy et al. (1989; 1992a; 1992b). PERFECT is based on the USDA hydrology models CREAMS and EPIC. PERFECT is a one-dimensional model, i.e., all calculations are performed on a unit-area basis with profile depth being the single dimension. Model simulation is performed on a daily basis using rainfall, pan evaporation, average temperatures, planting and tillage dates, crop, and tillage type. Surface management-soil loss relations are obtained from functions developed in Queensland (Australia) using the universal soil loss equation (USLE). These include crop residue and cover relations. The functions have been validated with field runoff and soil loss measurements from sorghum grown on an Alfisol at IAC.

The model predicts runoff, erosion, soil water, drainage, and sorghum yield. To predict the water balance, a modified form of Ritchie (1972) water balance submodel is used. Modifications were made to the curve number on a daily basis to account for the effects of surface cover and tillage. Soil loss is estimated as a function of runoff volume, cover, peak

runoff rate, rainfall erosivity, management practice, and catchment characteristics. Soil water is updated on a daily basis by any rainfall exceeding the daily runoff volume. Transpiration is estimated from pan evaporation, leaf area, and soil moisture. Soil evaporation is based on a two-stage evaporation algorithm. Crop growth and yield predictions are estimated using dynamic crop growth models.

PERFECT uses the sorghum crop growth model SORKAM developed in the USA. The model predicts crop phenology, leaf area and dry matter using functions of transpiration, transpiration efficiency, potential evaporation, daily temperature, and photoperiod. Crop planting and tillage dates can either be input by the user or generated automatically, based on user-defined planting or tillage criteria. PERFECT requires daily climate data, parameters that describe the soil profile, and parameters that affect crop growth. Many of these data need to be collected or compiled for local conditions.

Procedure

One primary requirement to run PERFECT is daily climate data, including rainfall, pan evaporation, temperature, and solar radiation (optional). A climate dataset for as long a period of time as possible (maybe for > 25 years) is required. Collection and assembly of the climate data in a format that is compatible with the model (see Fig. 1) should be done with great care and accuracy. For places where long-term climatic records are not available, the model has an option to run on daily rainfall and average weekly or monthly pan evaporation, temperature, and radiation.

The model also requires data on soil profile characteristics. The profile is represented by three layers of variable thickness, with moisture content for each layer at saturated upper limit, drained upper limit, wilting point, and air-dry conditions. It is always advisable to collect this information under field conditions. Infiltration parameters such as saturated hydraulic conductivity, cracking, initial soil moisture content, and evaporation, i.e., CONA (slope of stage II soil evaporation curve) and URITCH (upper limit of stage I soil evaporation curve) are also required. Soil management options such as tillage operations and amendment applications can be performed by specifying the minimum rainfall required to do that operation over a defined period and dry-day requirements between rain and tillage. The model can be used to evaluate sorghum and sunflower performance and yields, either as a continuous monoculture or in rotations through an opportunity cropping option. The user can define a planting criterion similar to tillage criteria for planting a crop. The user also needs to input the crop variety and planting density.

The model is sensitive to a large number of input parameters. Before using the model the user should note the effect of various parameters on the output in which he/she is interested. The influence of some important parameters on water balance, erosion, and yield are summarized in Table 1. Curve number, the relation between rainfall and runoff, has the highest effect on all output parameters because runoff predictions are based on it. For accurate simulation, the user should obtain a set of curve numbers representing the effects of tillage, soil cover, and other parameters.

```
1   temperature (C)    ICRISAT            -18.09   144.19    453.54
2 21.25 24.15 27.35 30.45 32.15 29.20 26.65 25.60 26.00 25.05 22.40 20.65
3 20.35 20.85 21.15 22.10 22.55 23.35 24.30 24.95 25.35 26.65 27.15 28.40 28.65 29.65 30.55 31.10 30.70 31.60 32.20 31.95
4 32.75 32.05 30.80 29.25 28.05 27.40 27.30 26.90 26.60 26.10 25.40 25.45 25.65 25.80 25.85 25.65 25.80 26.40 26.20 25.85
5 25.65 24.85 24.25 23.75 23.30 22.45 21.75 21.05 20.95 20.70 20.40 20.40
1   radiation (MJ/m2/day)    ICRISAT            -18.09   144.19    453.54
2 17.20 19.10 21.40 22.90 23.00 18.60 16.10 15.60 16.80 18.50 16.90 16.00
3 16.50 16.40 17.20 18.20 18.70 18.40 19.10 19.20 20.90 20.50 21.70 21.80 22.10 22.60 23.20 23.20 22.40 23.70 22.60 23.20
4 23.20 22.00 21.40 18.50 16.90 16.30 17.20 15.60 15.80 16.00 14.70 14.90 14.70 16.50 17.10 17.30 16.30 17.80 17.20 17.60
5 19.50 18.70 18.40 17.30 17.50 16.10 17.50 16.50 16.50 15.50 16.50 15.30
1   pan evap. (mm)    ICRISAT            -18.09   144.19    453.54
2  5.13  6.99  9.26  10.82 12.44 9.36  6.00  4.61  4.61  4.93  4.70 4.62
3 32.20 33.70 36.30 39.10 42.30 43.60 49.00 51.40 61.10 61.90 63.70 68.00 69.70 72.20 76.90 78.50 74.10 84.80 83.70 87.80
4 90.90 85.10 81.70 61.50 59.00 52.70 49.40 43.20 41.60 34.80 29.80 32.60 32.30 33.20 31.10 33.30 32.50 32.70 30.40 32.40
5 35.30 35.50 35.20 34.40 32.50 32.60 32.70 32.80 32.80 31.30 33.10 36.40
C SITE D M Y  Rain  El  Tmp  Tmp  E  Sol
O      a o e  mm       max  min  v  rad
D      y n a              °C   °C  a
E         r                       p

i1 a4  2i2 i4   f5.1 f5.1 f5.1 f5.1 f5.1 f5.1
1 ICRI  1 11988  0.0 -1.0 26.5 12.8  4.3 16.2
1 ICRI  2 11988  0.0 -1.0 26.4 14.8  3.3 16.1
1 ICRI  3 11988  0.0 -1.0 25.5 10.5  3.2 13.8
1 ICRI  4 11988  0.0 -1.0 26.0 12.5  3.8 15.8
1 ICRI  5 11988  0.0 -1.0 27.5 12.2  4.0 17.5
1 ICRI  6 11988  0.0 -1.0 26.5 13.4  4.1 17.3
1 ICRI  7 11988  0.0 -1.0 26.5 13.2  3.9 16.4
```

Figure 1 — Format of climate data file for the PERFECT model.

Table 1 — Sensitivity of selected model parameters used in PERFECT on some predicted outputs.

Parameter[1]	Runoff	Transpiration	Soil evaporation	Deep drainage	Soil erosion	Crop yield
CN	high	medium	low	high	medium	medium
CONA	medium	low	medium	medium	low	medium
U	medium	low	medium	medium	low	low
Slope	nil	nil	nil	nil	high	nil
Length	nil	nil	nil	nil	high	nil
AFC	medium	low	medium	high	low	medium
POROS	high	low	low	high	high	low
KSAT	medium	low	low	high	medium	low
ADRY	low	low	low	low	low	low

1 CN = Curve number for runoff estimation.
CONA = Stage II soil evaporation curve.
U = Amount of stage I soil evaporation following infiltration.
Slope = Field slope for erosion estimation.
Length = Slope-length for erosion estimation.
AFC = Field capacity throughout profile.
POROS = Porosity throughout profile.
KSAT = Saturated hydraulic conductivity throughout profile.
ADRY = Air-dry component throughout profile.

To derive curve numbers, data on rainfall and runoff under different management options are required. If such data are not available, a rain simulator can be used to derive the functions (Littleboy et al. 1996a,b). A method for determining curve numbers by rainfall simulation has been described by Glanville et al. (1984).

After the required input information has been collected, the model should be validated using the recorded climate data and measured soil and crop parameters. The mean and standard deviation of these predictions in relation to the observed data will help in judging the accuracy of model predictions.

Notes Work and effort are needed to determine the input parameter values so that they represent a variety of conditions in the field with a high degree of confidence. The quality and usefulness of the predicted outputs depend on the quality and accuracy of input parameters. While using a model, researchers should consider the applicability, utility, and accuracy of the predictions in relation to the experimental results.

References

Glanville, S.G., Freebairn, D.M., and **Silburn, M.** 1984. Using curve numbers from simulated rainfall to describe the runoff characteristics of contour bay catchments. Proceedings of the Australian Institution of Engineers' Conference on Agricultural Engineering 1984, Bundaberg, Australia, 27-30 Aug 1984. Brisbane, Australia: Queensland Department of Primary Industries.

Hanks, J., and **Ritchie, J.T.** (eds.) 1991. Modeling plant and soil systems. Agronomy no.31. Madison, WI, USA: American Society of Agronomy. 545 pp.

Littleboy, M., Silburn, D.M., Freebairn, D.M., Woodruff, D.R., and **Hammer, G.L.** 1989. PERFECT: a computer simulation model of productivity erosion runoff functions to evaluate conservation techniques. Brisbane, Australia: Queensland Department of Primary Industries. 119 pp.

Littleboy, M., Silburn, D.M., Freebairn, D.M., Woodruff, D.R., Hammer, G.L., and **Leslie, J.K.** 1992a. Impact of soil erosion on production in cropping systems. I. Development and validation of a simulation model. Australian Journal of Soil Research 30:757–774.

Littleboy, M., Freebairn, D.M., Hammer, G.L., and **Silburn, D.M.** 1992b. Impact of soil erosion on production in cropping systems. II. Simulation of production and erosion risks for a wheat cropping system. Australian Journal of Soil Research 30:775–788.

Littleboy, M., Cogle, A.L., Smith, G.D., Yule, D.F., and **Rao, K.P.C.** 1996a. Soil management and production of Alfisols in the semi-arid tropics, India. I. Modelling the effects of soil management on runoff and erosion. Australian Journal of Soil Research 34:91–102.

Littleboy, M., Sachan, R.C., Smith, G.D., and **Cogle, A.L.** 1996b. Soil management and production of Alfisols in the semi-arid tropics, India. II. Deriving USDA curve numbers from rainfall simulator data. Australian Journal of Soil Research 34:103–111.

Ritchie, J.T. 1972. A model for predicting evaporation from a row crop with incomplete cover. Water Resources Research 8:1204–1213.

Whisler, F.D., Acock, B., Baker, D.N., Fry, R.E., Hodges, H.F., Lambert, J.R., Lemmon, H.E., McKinion, J.M., and **Reddy, V.R.** 1986. Crop simulation models in agronomic systems. Advances in Agronomy 40:141–208.

About ICRISAT

The semi-arid tropics (SAT) encompasses parts of 48 developing countries including most of India, parts of southeast Asia, a swathe across sub-Saharan Africa, much of southern and eastern Africa, and parts of Latin America. Many of these countries are among the poorest in the world. Approximately one-sixth of the world's population lives in the SAT, which is typified by unpredictable weather, limited and erratic rainfall, and nutrient-poor soils.

ICRISAT's mandate crops are sorghum, pearl millet, finger millet, chickpea, pigeonpea, and groundnut; these six crops are vital to life for the ever-increasing populations of the semi-arid tropics. ICRISAT's mission is to conduct research which can lead to enhanced sustainable production of these crops and to improved management of the limited natural resources of the SAT. ICRISAT communicates information on technologies as they are developed through workshops, networks, training, library services, and publishing.

ICRISAT was established in 1972. It is one of 16 nonprofit, research and training centers funded through the Consultative Group on International Agricultural Research (CGIAR). The CGIAR is an informal association of approximately 50 public and private sector donors; it is co-sponsored by the Food and Agriculture Organization of the United Nations (FAO), the United Nations Development Programme (UNDP), the United Nations Environment Programme (UNEP), and the World Bank.

About CRIDA

The Central Research Institute for Dryland Agriculture was established at Hyderabad in 1985. It grew out of the All India Coordinated Research Project for Dryland Agriculture (AICRPDA) of the Indian Council of Agricultural Research (ICAR). AICRPDA established in 1970 is still functioning over 23 cooperating centers spread across the rainfed/dryland areas of India. There is a symbiotic relationship between CRIDA and AICRPDA. While CRIDA undertakes primarily basic and strategic research in a multidisciplinary mode to evolve sustainable rainfed farming systems strategies, AICRPDA is its applied arm. It endeavors to find solutions to location specific problems. CRIDA also houses the All India Coordinated Research Project on Agrometeorology (AICRPAM) which operates at 25 centers, and the All India Coordinated Soil Test Crop Response (STCR) correlation project. CRIDA is the apex dryland/rainfed research institute of the ICAR system.