PN-ACB-648

MANUAL OF LABORATORY PROCEDURES FOR

Quality evaluation of sorghum and pearl millet

M I Gomez,
A B Obilana, D F Martin,
M Madzvamuse, and E S Monyo

ICRISAT

International Crops Research Institute for the Semi-Arid Tropics
Patancheru 502 324, Andhra Pradesh, India

1997

The Authors

Collective address: SADC/ICRISAT Sorghum and Millet Improvement Program (SMIP), PO Box 776, Bulawayo, Zimbabwe.

M I Gomez Formerly Principal Scientist (Food Technology).

A B Obilana Principal Scientist (Breeding).

D F Martin Senior Research Technician.

M Madzvamuse Senior Research Technician.

E S Monyo Senior Scientist (Breeding).

Acknowledgments

The development and production of this manual is part of the research and training activities of SADC/ICRISAT Sorghum and Millet Improvement Program at Matopos, Zimbabwe, funded by CIDA (Canadian International Development Agency).

Copyright ©1997 by the International Crops Research Institute for the Semi-Arid Tropics (ICRISAT).

All rights reserved. Except for quotations of short passages for the purposes of criticism and review, no part of this publication may be reproduced, stored in retrieval systems, or transmitted, in any form or by any means, electronic, mechanical, photocopying, recording, or otherwise, without prior permission of ICRISAT. It is hoped that this copyright declaration will not diminish the bona fide use of its research findings in agricultural research in and for the tropics.

The designations employed and the presentation of the material in this publication do not imply the expression of any opinion whatsoever on the part of ICRISAT concerning the legal status of any country, territory, city, or area, or of its authorities, or concerning the delimitation of its frontiers or boundaries. Where trade names are used this does not constitute endorsement of or discrimination against any product by the Institute.

Citation Gomez, M.I., Obilana, A.B., Martin, D.F., Madzvamuse, M., and Monyo, E.S. 1997. Manual of laboratory procedures for quality evaluation of sorghum and pearl millet. Technical Manual no.2. (In En. Abstracts in En, Fr.) Patancheru 502 324, Andhra Pradesh, India: International Crops Research Institute for the Semi-Arid Tropics. 116 pp. ISBN 92-9066-348-0. Order code TME 002.

Abstract This manual is for use by scientists and technicians who screen and evaluate varieties of sorghum and pearl millet for their grain quality. It is based on experience in agronomy and food technology acquired over several years in SADC/ICRISAT's Sorghum and Millet Improvement Program in Zimbabwe, where there is a focus on generalized screening methods for broad grain qualities rather than detailed component analysis of a molecular nature.

Laboratory procedures, including qualitative and quantitative methods, were compiled from existing sources and modified in several ways for the Program's use. Quality parameters were focused on grain, on primary products such as flour, meal, and malt, and on such secondary products as baked flour, steamed flour, and porridge. The grain and these products were evaluated using physical and chemical methods, and a database was created to serve as an empirical reference document derived from field and laboratory results.

The manual's first section, on grain-quality evaluation, describes rapid techniques for routine screening. The qualitative parameters used are: color, pericarp thickness, testa, endosperm texture, and hardness. Quantitative parameters comprise 100-kernel weight, Agtron readings, and moisture, floaters, dehulling loss, milling yield, size fractions, and water absorption expressed as percentages. Eight chemical methods of evaluation are described in the second section, among which only rapid tannin analysis forms part of routine screening tests. The last section covers product preparation and testing, with specific reference to bread, cookies, and porridge. And the manual ends with its unique empirical database of 39 tables which presents grain-quality and malting test results for selected lines, varieties, and hybrids of sorghum and pearl millet.

Résumé *Manuel de techniques d'évaluation en laboratoire de la qualité alimentaire du sorgho et du mil.* Ce manuel est destiné aux chercheurs et techniciens ouevrant sur le criblage et l'évaluation des variétés de sorgho et de mil pour la qualité du grain. Les auteurs ont puisé pour ce manuel, dans leur expérience en agronomie et technologie alimentaire acquérie au cours de plusieurs ans au sein du Programme SADC/ICRISAT d'amélioration du sorgho et du mil au Zimbabwe. Ce Programme est axé sur des méthodes de criblage généralisées pour des aspects larges de qualité du grain plutôt que sur l'analyse moléculaire (en détail) des composantes.

Des techniques de laboratoire, tant qualitatives que quantitatives, ont été tirées de différentes sources et modifiées. Des paramètres de qualité portent sur le grain, sur les produits primaires tels que la farine, le malt et sur les produits secondaires tels que la farine cuite au four et à vapeur, et du porridge. Le grain et ces produits ont été évalués en utilisant des méthodes physiques et chimiques, et une base de donnée a été créee afin de servir de document de référence basé sur des résultats obtenus en champ et en laboratoire.

La première section, sur l'évaluation de la qualité du grain, décrit des techniques rapides de criblage ordinaire. Les paramètres qualitatives utilisés comprennent la couleur, l'épaisseur du péricarpe, le testa, la texture d'endosperme, et la dureté. Les paramètres quantitatives comprennent le poids de 100 grains, le pointage Agron ainsi que la teneur en humidité, la perte de décorticage, le rendement de moulure, la dimension des fractions et l'absorption de l'eau, exprimés en pourcentages. Huit méthodes chimiques d'évaluation sont exposées dans la deuxième section, dont l'analyse rapide de tanin seulement fait partie de criblage ordinaire. La dernière section couvre la préparation et l'évaluation des produits avec des références spécifiques au pain, aux petits gâteaux, et au porridge. A la fin est présentée la base de donnée empirique avec 39 tableaux qui donnent les résultats des évaluations sur le malt et la qualité du grain des lignées, des variétés et des hybrides sélectionnés du sorgho et du mil.

Contents

Grain-Quality Evaluation 5

Sorghum 5
- Qualitative grain-quality evaluation 5
  - Grain color 5
  - Pericarp thickness 6
  - Testa 7
  - Endosperm texture 7
  - Hardness 7
- Quantitative grain-quality evaluation 8
  - Percent moisture content 8
  - 100-kernel weight 10
  - Percent floaters 10
  - Percent dehulling loss 12
  - Percent milling yield 14
  - Percent size fractions 14
  - Agtron readings 15
  - Percent water absorption 17

Pearl Millet 18
- Qualitative grain-quality evaluation 18
- Quantitative grain-quality evaluation 18

Chemical Analyses 21

Oven-drying method for the determination of moisture content 21

Determination of ash content 22

Determination of fat content 24

Micro-Kjeldahl nitrogen determination 25

Pepsin digestibility 29

Tannin content determination 31
- Rapid tannin analysis: semiquantitative 31
- Assay by vanillin-hydrochloric acid method: quantitative 34

Malting behavior and diastatic determination of malts 37

Determination of α and β amylase in malt 43

Product Preparation and Testing 45

Product Preparation 45
- Preparation of flour/meal 45
- Preparation of composite flour baked bread 46
- Preparation of composite flour steamed bread 48
- Preparation of composite flour cookies 49
- Preparation of stiff porridge 50

Product Testing 51
Gelatinization temperature 51
Consumer taste panel sensory evaluation 53
Bread testing 56
Cookie testing 59
Porridge testing 60
Consistometry 60
Viscometry 62
Texture measurement 66
Color determination 66

References 68

Appendixes 71

1. Steinlite Conversion Chart 71
2. Glossary 72
3. Abbreviations, Acronyms, and Symbols 73
4. Equipment Suppliers 75
5. Empirical Database for Sorghum and Pearl Millet Grain-Quality and Malting Data 75

Grain-Quality Evaluation

Grain-quality evaluation (GQE) involves the use of rapid screening procedures to evaluate various qualitative and quantitative parameters to determine the end-use quality of sorghum and pearl millet grain. All tests are performed on whole, healthy grain from a representative sample; and at least two replicate tests are done on each sample. Any defects in the grain within the sample being tested should be noted and defective grain discarded. After harvest the grain should be kept in a cold store at 4°C. It should be removed from the store 24 h before testing commences, and laid out on a working bench to equilibrate to room temperature and humidity.

The objective of the GQE tests is to provide concise information on the quality of the materials under test, to determine the most relevant quality traits for end-use selection. The grain-quality parameters for sorghum and millet listed in Table 1 give an idea of the criteria used in selecting material for "milling" or "malting" end-use and their optimal ranges for acceptability. "Milling" includes all applications involving grain dehulling and size reduction, e.g., meal, flour, grits, and rice-analogue.

No single parameter serves as a criterion, nor can it be a condition for selection, and several traits need to be considered together in evaluating the end-use. For this reason, a spectrum of measurements is included in the GQE which, considered together with other information, provides a basis for end-use selection.

Because of the different characteristics of the two grains, for certain parameters, different methods may be employed to evaluate the grain. For this reason GQE procedures for sorghum and pearl millet are presented separately in this manual.

Sorghum

Qualitative grain-quality evaluation

This subsection describes techniques for analyzing grain for the following characteristics: grain color, pericarp thickness, the presence or absence of testa, endosperm texture, and hardness.

In addition, it may also be desirable to observe and record any visible defects, such as insect damage, mold, and shriveled or broken kernels, which may affect the quality of the grain.

Grain color—

Rationale. It is important to record grain color because it influences the color of any product made from that grain. For instance, if it is to be milled for porridge meal, a white or light color is generally preferred.

Procedure. Differences in grain color can be effectively observed by placing a few sample kernels on a sheet of white paper. Note the

color of the pericarp (outer coat of grain) and record it with such descriptors as: white, yellow, red, brown, buff, or gray, or a combination of these colors, according to the IBPGR and ICRISAT (1993a, pp.18 and 20) classification of kernel color.

Table 1—Grain-quality parameters for sorghum and pearl millet, and their optimal ranges for milling and malting.

	Milling		Malting	
Parameter	Sorghum	Pearl millet	Sorghum	Pearl millet
Grain color	White/cream/ yellow/red	White/ivory/cream/ yellow/gray	Brown[1]	N.A.
Pericarp	Thin	N.A.	N.A.	N.A.
Testa	No	N.A.	Yes	N.A.
Endosperm texture	Pearly to intermediate	Pearly to intermediate	Chalky	Chalky to intermediate
Visual hardness	3.0 to 5.0	2.5 to 4.0	1.0 to 2.5	1.0 to 2.5
Kernel weight	>2.0 g	>1.1 g	N.A.	N.A.
Floaters	<40%	<60%	>40%	>40%
Milling yield	>75%	>80%	<70%	N.A.
Size fractions	>80% in medium/ large	>20% in large	N.A	N.A.
Dry Agtron reading	>75.0	>52.0	N.A.	N.A.
Water absorption	<12.5%	<12.5%	>12.5%	>10.0%
Tannins	Intermediate to low/none	N.A.	Intermediate to low[2]	N.A.
Diastatic power	N.A.	N.A.	28 to 50[1]	>35

1 Red and white sorghums may have diastatic powers within this range, but they are slower than brown sorghums at malting and have a lower grain modification.
2 This tannin range is preferable; however, brown sorghums usually fall within the high tannins range.

Pericarp thickness—

Rationale. Pericarp thickness affects dehulling loss and milling yield. Grain with a thin pericarp needs a shorter dehulling time than thick-pericarp grain. A thick, light-colored pericarp may mask a testa layer or a dark endosperm, giving a false impression of the grain color.

Procedure. Scrape the kernels with a scalpel and remove the pericarp. Using a magnifying glass, observe the pericarp's thickness and record

whether it is thick or thin. A thick pericarp comes off in thin flakes, while a thin one usually scrapes off in small fragments or as a powder.

Testa—

Rationale. The testa is a heavily-pigmented layer containing tannins found just under the pericarp in high-tannin brown sorghum varieties (Hahn et al. 1984). It is purple or brown and is thick at the crown of the kernel and thin near the germ region. The testa closely adheres to the endosperm and affects the flour color in milled products. The tannins in the testa affect taste, digestibility, and other functional properties of the grain.

Procedure. Scrape off the pericarp at the crown of the kernel, using a scalpel. If a dark layer is now visible, record "yes"; if not, record "no".

Endosperm texture—

Rationale. Endosperm color affects the color of the milled product. Texture affects hardness, and hence the milling yield.

IBPGR and ICRISAT (1993a) classifies endosperm texture as: completely corneous; mostly corneous; intermediate; mostly starchy; and completely starchy; any one classification can be used. For this manual, however, our classification based on the same document can be interpreted as follows:

Pearly = completely corneous/mostly corneous: score of 1.

Intermediate = intermediate: score of 2.

Chalky = mostly starchy/completely starchy: score of 3.

Procedure. Endosperm is composed of a hard outer layer which is called the vitreous, corneous, or pearly layer, and a softer inner layer called the floury, starchy, or chalky layer. To observe the two layers, hold a kernel firmly with a pair of blunt-ended forceps and, using a scalpel, cut it longitudinally. Record the color of the endosperm as either white or yellow. Observe the proportion of floury to vitreous endosperm. If this proportion is equal, record "intermediate" (score of 2); if there is more floury endosperm, record "chalky" (score of 3); and if there is more vitreous endosperm, record "pearly" (score of 1).

Hardness—

Rationale. Milling quality is influenced by grain hardness. Harder grains generally give a higher milling yield. Grain hardness also influences water absorption, which in turn has an effect on diastatic enzyme activity.

Principle. Grain hardness is measured visually on a scale of 1 to 5 based on proportion of floury to vitreous endosperm; hardness scoring using this method is thus rather subjective. To verify the scores, quantitative dehulling loss and percent floaters determinations can be used.

Equipment.

Item	*Size/model*	*Quantity*	*Specification/source*
Paper		A3	1 sheet White, bond
Masking tape	20 mm	1 roll	
Forceps	Small	1 pair	Blunt-ended
Scalpel		1	Handle and sharp blade
Seed	2x	1	Seedburo magnifier

Procedure. Select 10 sound kernels. Hold each kernel firmly on the paper with the forceps and, using the scalpel, cut them longitudinally into two symmetrical halves. Take one-half from each kernel and press it, cut side up, onto a strip of masking tape that is placed, sticky side up, on the paper. Then, with the aid of the seed magnifier, examine each kernel and give each a hardness score based on the following scale:

Score	*Vitreousness*	
1	<25%	i.e., soft
2	25%	
3	50%	i.e., intermediate
4	75%	
5	>75%	i.e., hard.

Record each score and then calculate the average.

Quantitative grain-quality evaluation

This subsection describes techniques used in the following tests:

- percent moisture content (% MC);
- 100-kernel weight in grams (g 100^{-1} grains);
- percent floaters (% Fl.);
- percent dehulling loss (% DHL);
- percent milling yield (% MY);
- percent size fractions (% small, medium, and large grains);
- Agtron readings (measured in Agtron reflectance units) denoting color reflectance; and
- percent water absorption (% WA).

See Appendix 5 for actual results of tests done on grain from the 1992/93 season's trials (Tables S1 to S18).

Percent moisture content—

Rationale. It is important to know the moisture content (MC) of grain because the MC affects storage life. Grains with MCs ≥12% are more susceptible to mold infection than those at lower MCs. Grain-quality parameters such as density and milling yield are affected by MC, so the MC of all the samples for GQE must first be determined and then standardized to a MC of 11.0 ± 0.5% before any further tests are carried out. The Steinlite electronic moisture tester (Fig. 1) is used to determine the MC of whole grain.

Principle. The Steinlite tester generates a high-frequency current that passes through the sample and is registered on a meter. The higher the MC of the grain, the less impedance to the flow of current through the sample and, therefore, the higher the meter reading (Fred Stein Laboratories 1951). This method of MC determination has been standardized and calibrated against the oven-drying method (AOAC 1980: see Chemical Analyses section) by regression analysis. The Steinlite moisture value (x) is thus converted to oven % MC (y) by substitution in the equation: $y = 3.89 + 0.58x$.

Equipment. (See Appendix 4 for suppliers' addresses.)

Item	*Size/ model*	*Quantity*	*Specification/ source*
Balance	750 x 0.1 g	1	Toploader
Beakers	500 mL	2	Plastic
Electronic moisture tester	Model 400G	1	Steinlite, from Fred Stein Laboratories
Conversion chart	For sorghum	1	Steinlite

Procedure. Weigh a 150-g sample of grain into a beaker.

Switch the tester on (Fig. 1) and allow it to warm up for at least 5 min.

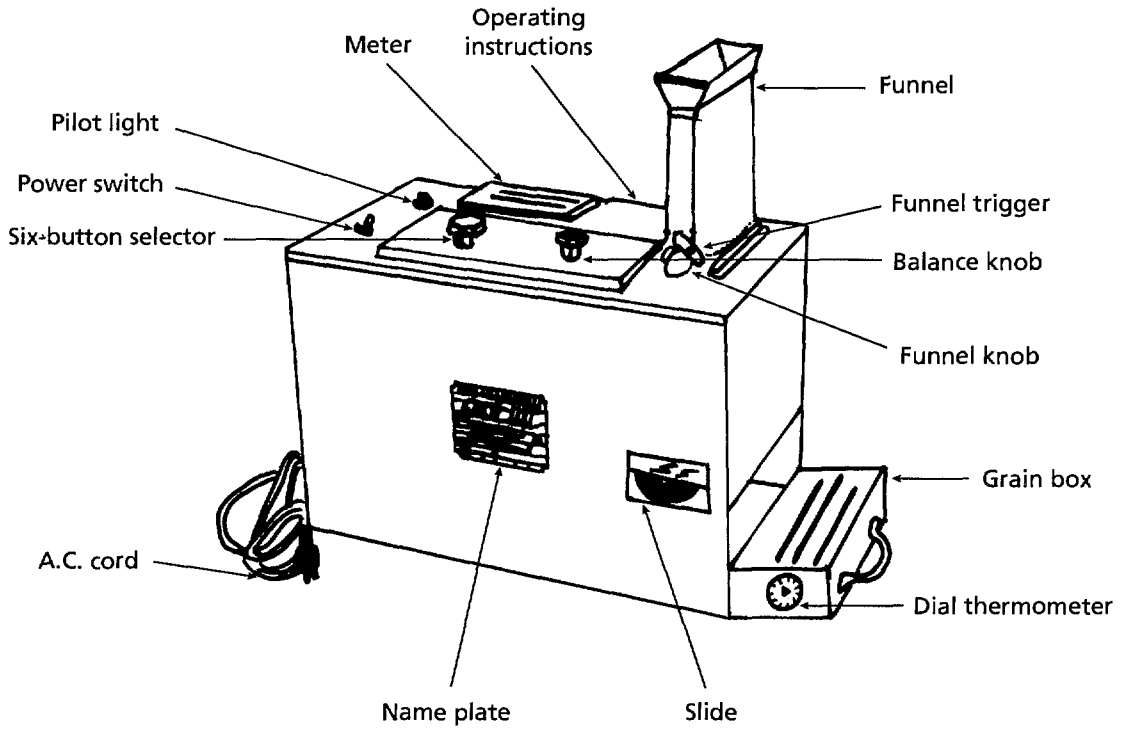

Figure 1—The Steinlite moisture tester (Fred Stein Laboratories, Inc. 1951).

Set the button selector to the "red button".

Adjust the "balance" knob so the meter pointer is on 45.

Set the button selector to the "E" button.

Pour the sample into the funnel and press the funnel trigger. Rotate the button selector counter-clockwise until a meter reading is obtained.

Note the reading and the button at which the selector is pointing.

Pull the slide to release the sample into the grain box and wait 1 min.

Note the temperature on the dial.

Tip out the sample and repeat the whole procedure with a second 150-g sample.

Refer to the column on the Steinlite conversion chart (Appendix 1) that corresponds to the button the selector pointed at for the meter reading in order to convert this reading to a moisture value. (The chart also shows the temperature corrections to be made to the moisture values according to the temperature of the samples.)

Record the corrected moisture values and their mean (x).

Substitute x into the regression equation $y = 3.89 + 0.58x$ to convert the Steinlite moisture value to % MC by the oven method (y).

The regression equation can be worked out by regression analysis using 50 different samples analyzed for % MC by both the Steinlite and oven-drying methods. The internal working of the Steinlite meter can alter slightly in time, and the regression analysis should therefore be redone about once every 2 years.

Once % MC has been determined, if it does not fall within the range of 11.0 ± 0.5, water may be added to the sample to increase its MC, or it may be dried in an oven at 50°C to reduce its MC.

100-kernel weight—
Rationale. The weight of 100 kernels indicates the grain's density.
Principle. Because the grain is small, and there is variation in kernel size within a variety, one cannot just take one or two seeds and weigh them to establish the kernel weight; many seeds must be counted out and weighed together to provide a representative average.

Equipment.

Item	*Size/ model*	*Quantity*	*Specification/ source*
Weighing boats	Small	4	
Balance	750 x 0.01 g	1	Toploader

Procedure. Manually count three sets of 100 kernels.

Record the weight of each set in grams.

Calculate the mean of the three.

(Reserve the three sets for testing floaters, as below.)

Percent floaters—
Rationale. This is an indirect method of determining grain density, which is a measure of hardness. This is an important factor of grain quality that influences processing quality and end-use, e.g., milling and malting.

Principle. This method is based on the flotation of kernels in a solution of sodium nitrate of known density (Kirleis and Crosby 1981; Hallgren and Murty 1983). A solution of specific gravity 1.3 is used (which was found to be approximately equal to the average density of a wide range of sorghum kernels). Thus, in this solution, kernels of lower density than average will float, while those with greater density will sink.

Equipment.

Item	*Size/ model*	*Quantity*	*Specification/ source*
Beaker	400 mL	1	Glass, T/F
Stirring rod	200 x 4 mm	1	Glass
Balance	750 x 0.1 g	1	Toploader
Measuring cylinder	250 mL	1	Glass
Hydrometer	1.0–1.5	1	
Test tubes	50 mL	3	Plastic, W/M
Test tube holder		1	Large-holed
Teaspoon		1	Plastic
Petri dishes		3	Without lids
Tea strainer		1	Plastic
Timer		1	Seconds
Spatula	Small	1	

Reagent. Sodium nitrate GPR, and distilled water.

Procedure (Fig. 2). Weigh 178.9 g sodium nitrate into the beaker.

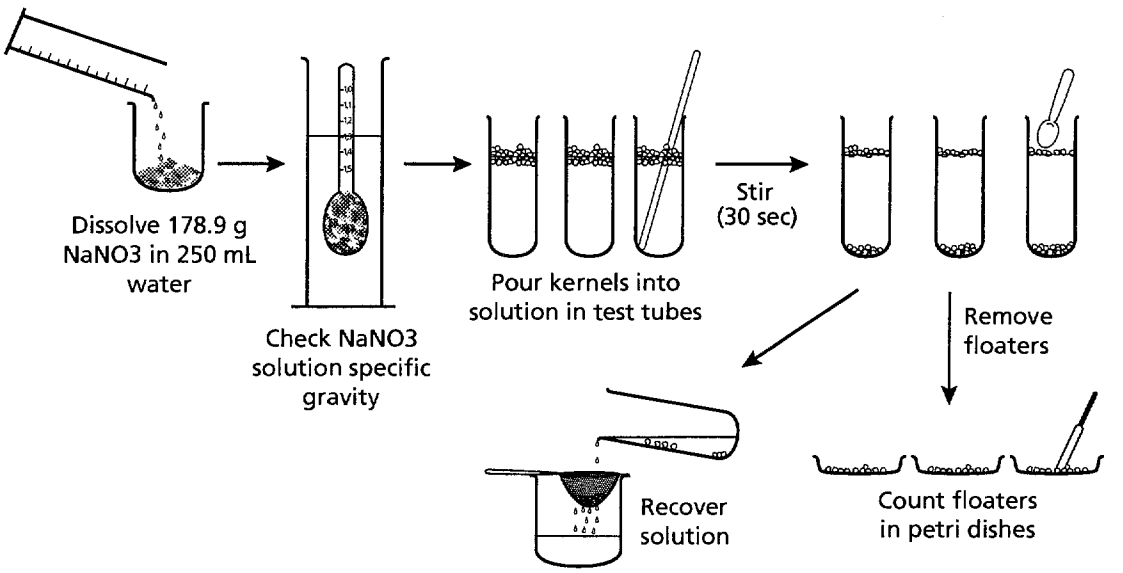

Figure 2—Procedure for determining percent floaters.

Add 250 mL water and stir to dissolve.

Pour the solution into the measuring cylinder and float the hydrometer in it to check its specific gravity.

Add more water to the solution if the reading is above 1.3, and, if it is below, add more sodium nitrate to make it up to 1.3.

Fill each of the three test tubes three-quarters full with solution.

Taking the three sets of 100 kernels used in the 100-kernel weight test, transfer one set into each test tube.

Stir the contents of each tube for 30 sec.

Scoop the floating kernels out of each tube, using the teaspoon, and put them in the petri dishes for counting.

Record the number of floaters from each tube.

Calculate the mean of the three.

To remove the sunken kernels from the test tubes, pour the contents of the tubes through the tea strainer held over the beaker.

The solution can be re-used as long as its specific gravity is checked and adjusted each time before use.

Percent dehulling loss—

Rationale. Since dehulling is followed by milling, the higher the loss at the dehulling stage the lower the milling yield will be. Dehulling loss gives an indication of hardness; the harder the grain the lower the dehulling loss.

Principle. A tangential abrasive dehulling device (TADD) is used as a laboratory dehuller (Fig. 3). The TADD has a resinoid disk mounted horizontally beneath eight sample cups. When grain has been placed in the cups and the lid closed, the motor can be turned on; this sets the disk rotating at 1 725 rev min^{-1} (Oomah et al. 1981; Reichert et al. 1986). The grain pericarp is rubbed off, and the fines that are generated exit underneath the cups and are swept out of the machine into a fines collection bag by means of an air-flow produced by the fan.

Equipment.

Item	*Size/ model*	*Quantity*	*Specification/ source*
Dehuller	Model 4E-220	1	TADD, Venables Machine Works
Resinoid disk	255 mm, no.36	1	3M
Vacuum cleaner	Industrial	1	
Vacuum sample collector to fit vacuum cleaner hose		1	With 8 collector cups
Balance	750 x 0.01 g	1	Toploader
Timer		1	Minutes

Procedure. The TADD allows one to work on four samples (in duplicate) at the same time.

Weigh exactly 20 g of sample grain into each collector cup.

Pour the samples into the cups in the TADD. Close the lid firmly and set the timer for 4 min.

Turn on the motor and timer together.

After 4 min, turn off the motor.

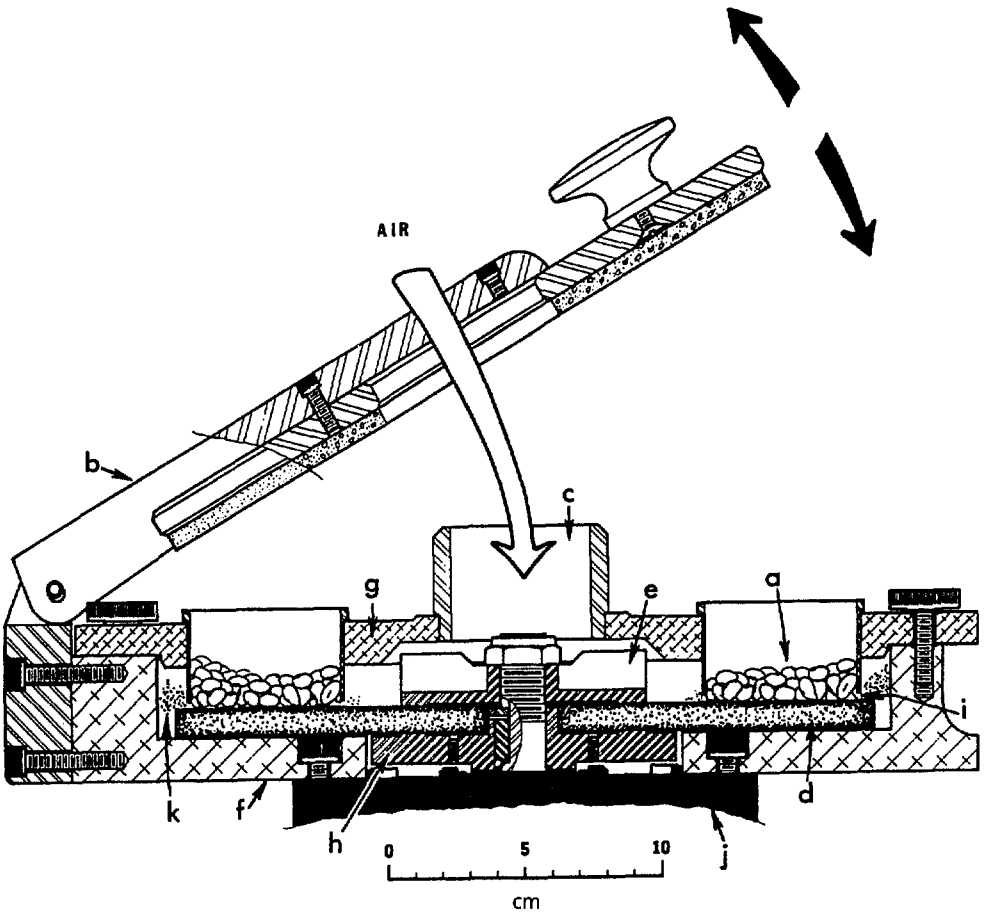

a, grain in sample cup; b, hinged lid; c, air inlet port; d, grinding wheel; e, fan; f, base; g, eight-sample plate; h, driving disk; i, gap between bottom of sample cup and grinding wheel (exaggerated for clarity); j, brake; k, bran.

Figure 3—Cross-section of the tangential abrasive dehulling device, illustrating the air movement (Reichert et al. 1986).

After dehulling, remove the samples using the vacuum sample collector attached to the vacuum cleaner.

Reweigh samples and record final weights (and keep them for the milling yield test).

Between runs, clear out the sample cups thoroughly, using the vacuum cleaner.

Calculation. Calculate the % dehulling loss (DHL) using the following equation:

$$\% \text{ DHL} = \frac{B - A}{B} \times 100$$

where B = initial weight of whole grain; and A = final weight of dehulled grain. Then calculate the means for the four duplicated samples.

Percent milling yield (% MY)—

Rationale. The main reason for conducting the MY test is to determine whether the grain gives a good yield of flour after milling. Generally, hard grains have high milling yields.

Principle. A Udy cyclone sample mill is used for milling. It grinds samples by means of a high-speed impact action (Udy Corp. 1960). This action rolls the sample against the inner circumference of a durable tungsten carbide grinding surface until it passes through a screen impelled by a high-velocity flow of air. The sample is therefore cooled simultaneously during milling, and moisture loss or heat degradation is avoided.

Equipment.

Item	*Size/ model*	*Quantity*	*Specification/ source*
Cyclone sample mill	Model MS 3010-017	1	With 0.4-mm screen, Udy Corp.
Weighing boats	Small	8	
Balance	750 x 0.01 g	1	Toploader

Procedure. Take the dehulled samples from DHL test and mill them separately in the Udy mill.

Transfer each sample from the mill's collection jar into a weighing boat and weigh it, recording this final weight (and reserve the meal for taking the Agtron readings, as below).

Calculation. Use the following formula to calculate MY:

$$\% \text{ MY} = \frac{C}{A} \times 100$$

where: C = final weight of meal, and A = initial weight of whole grain (i.e., 20 g). Calculate the mean MY for each of the four duplicated samples.

Percent size fractions—

Rationale. When grain is dehulled and milled on a large scale, it is preferable to use grain of uniform size so that the resulting primary product may have a uniform particle size distribution. A sample with a high proportion of small grain will have a low milling yield because the smaller kernels will be removed with the bran.

Principle. In this method, a number of screens are stacked in descending order of size. After a sample has been shaken through the screens, it will be fractionated according to grain size. One can then determine the grain size of highest percentage, as well as the size distribution (uniformity) within a sample.

Equipment.

Item	*Size/ model*	*Quantity*	*Specification/ source*
Beakers	500 mL	2	Plastic
Balance	750 x 0.01 g	1	Toploader
Screen shaker	Model no.98-SS	1	Seedburo
Hand-testing screens	Diam. 4.0, 3.6, 3.2, 2.6 and 2.2 mm		Round-holed, Seedburo
Weighing boats	Large	5	

Procedure (Fig. 4). Weigh out 2 x 100–g samples of whole grain into the beakers.

Stack the screens onto the shaker, with the largest at the top and the smallest at the bottom.

Pour one sample onto the stack and set the shaker to run for 1 min (or do the shaking manually, if preferred).

Then pour the contents retained on each screen into a weighing boat and record the weights.

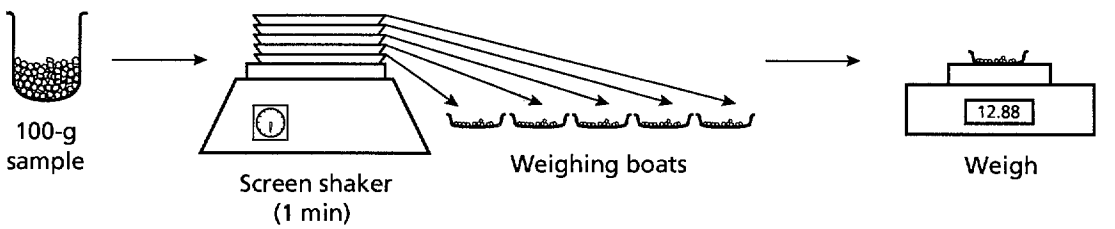

Figure 4—Procedure for determining percent size fractions.

Repeat the sieving with a second sample.

Express weights as a percent of the total weight.

These percentages can be further divided into three groups, i.e.,: large = >4.0 mm; medium = 4.0–2.6 mm; and small = ≤2.6 mm.

Agtron readings—

Rationale. The Agtron meter (Agtron process analyzer) is a color quality reflectance meter. Agtron readings provide a measure of how white a milled sample is. It may be difficult to tell by sight which of two meals is whiter, but the Agtron meter quantifies the readings and thus differentiates between the two. Dry as well as wet readings are taken—the latter providing a better expression of the sample's color when it is hydrated, as in a cooked product. The instrument is thus useful for giving an indication of the color quality of flour intended for use in foods, particularly bakery products.

Principle. The Agtron meter measures a product's monochromatic reflectance at a chosen spectral line (Agtron Inc. 1989). We use the green mode for readings of materials in the color range white to light brown. The numerical reading on the meter is a quantitative comparison of the sample relative to the calibration standards. The higher the Agtron reading, the whiter the flour. Wheat flour can be used as a reference material.

Equipment.

Item	*Size/ model*	*Quantity*	*Specification/ source*
Reflectance meter	M-45	1	Agtron Process Analyzer
Reference reflectance disks	0, 63, 90	3	Agtron
Sample cups	Small	2	Agtron
Weighing boats	Small	2	
Balance	750 x 0.1 g	1	Toploader
Beaker	250 mL	1	Glass
Thermometer	0–50°C	1	
Timer		1	Seconds
Pipette	20 mL	1	Graduated
Stirring rod	200 x 4 mm	1	Glass, with rubber end stop

Procedure. Turn on the Agtron meter so that it may warm up for at least 2 h before use.

Calibrate the instrument using the "O" reflectance disk, to zero the machine, and the "90" disk, to standardize it. Use the "63" disk to check the calibration.

Weigh out 2 x 10-g samples of the meal produced in the MY test.

Pour the samples from the weighing boats into the sample cups.

Ensure that there is a flat, smooth layer of sample completely covering the bottom of the sample cup.

Place one cup over the viewing aperture and, when the reading dial ceases to move, record the reading.

Repeat this procedure with the other sample.

For the wet readings, half fill the beaker with distilled water and check the temperature of the water. It should be 20°C. If not, adjust to the correct temperature, either by adding iced water if the temperature is above 20°C, or by adding warm water if it is below 20°C.

Pipette 12 mL of the water into each 10-g sample in the cups.

Stir the samples for 1 min to form a homogeneous paste or slurry.

Take the same readings as for the dry samples.

Calculate the average dry and wet readings for the sample.

A 10-g sample of wheat flour can be used as a control for comparison of whiteness.

Percent water absorption (% WA)—

Rationale. This test ascertains the amount of water absorbed by a sample in a given time, and thus the approximate depth of penetration of water into the kernel over that time. It gives an indication of the hardness of the endosperm—a useful factor to know when one wishes to condition grain before dehulling and milling. Grains with lower percent water absorption require longer conditioning.

Principle. A sample of grain is weighed, soaked in water for 30 min, then drained and reweighed. Thus the percentage of water absorbed by the grain over that time can be calculated. (Note that, in preliminary tests, 30 min was found to give the highest differentiation of WA among varieties.)

Equipment.

Item	*Size/ model*	*Quantity*	*Specification/ source*
Weighing boats	Small	4	
Balance	750 x 0.01 g	1	Toploader
Timer		1	Minutes
Beakers	400 mL	2	Glass, T/F
Funnels	70 mm diam.	2	Plastic
Filter paper	12.5 cm, 2 v	2 pieces	Fluted, Whatman
Tissue paper		1 roll	

Procedure. Weigh 2 x 5-g samples of grain into two of the weighing boats; record the exact weights.

Fill boats with enough water to cover the grains, and immediately start the timer for 30 min.

Place the funnels over the beakers and insert a piece of fluted filter paper into each one.

After 30 min, tip the samples into the funnels, drain and lift the samples in the filter paper out of the funnels, flatten the paper and place it to dry for 5 min on a six-layer stack of tissue paper.

Transfer each sample into one of the remaining unused dry weighing boats and then reweigh.

Calculation.

% WA can be calculated using the following equation:

$$\% \text{ WA} = \frac{B - A}{A} \times 100$$

where B = the final weight of the grain; and A = the grain's initial weight.

Many of the GQE tests for pearl millet are exactly the same as those done for sorghum, or the procedures vary only slightly. Therefore, since most of the pearl millet GQE tests are done for the same reasons, have the same principles, and follow the same procedures as those relating to sorghum, as above, they will not be repeated here. Only the variations in procedure will be noted.

Grain-quality parameters are shown in Table 1.

Qualitative grain-quality evaluation

This subsection describes only the techniques for recording grain color, endosperm texture, and visual hardness, because tests for pericarp thickness and presence/absence of testa are not required for pearl millet. Additionally, defects such as insect damage, mold, and shriveled and broken kernels should be noted.

Grain color—As for the sorghum method except that the following descriptors are used: ivory, cream, yellow, gray, deep gray, gray-brown, brown, purple, purplish-black, and a mixture of white and gray (IBPGR and ICRISAT 1993b, pp.19–20).

Endosperm texture—As for the sorghum method. IBPGR and ICRISAT (1993b, pp.19–20) classify endosperm texture as follows: mostly corneous, partly corneous, and mostly starchy: equivalent to our pearly, intermediate, and chalky classes, respectively.

Hardness—As for the sorghum method except that the scale is reduced to: 1 = soft; 2.5 = intermediate; and 4 = hard.

Quantitative grain-quality evaluation

This section describes the same tests the techniques of which are described in the sorghum section (see p.5). See Appendix 5 for actual results of tests done on grain from the 1992/93 season's trials (Tables P1 and P2).

Percent moisture content—As for the sorghum method, but the regression equation changes to: $y = 8.56 + 0.047x$. Pearl millet MC should be standardized to 9.10 ± 0.05%. Note that the Steinlite conversion chart used for sorghum (Appendix 1) is also used here for pearl millet because no chart is available for pearl millet.

100-kernel weight—As for the sorghum method.

Percent floaters—Pearl millet was found to have the same average density as sorghum. Therefore the same procedure as for sorghum is followed here.

Percent dehulling loss—

Principle. Because of the softness of pearl millet grain, and its smaller and more flattened shape, dehulling of pearl millet in the TADD resulted in grain breakage, removal of small kernels with the bran, and uneven dehulling of the kernels. The Kett Pearlest equipment (Fig. 5) gives better results than the TADD for pearl millet dehulling. It works on the same principle as the TADD, but it is less abrasive and dehulls more evenly. The Pearlest's polishing chamber has pitted metal sides, a

stationary abrasive disk at the top, and a rotating abrasive disk at the bottom.

Equipment.

Item	*Size/ model*	*Quantity*	*Specification/ source*
Balance	750 x 0.01 g	1	Toploader
Timer		1	Seconds and minutes
Dehuller	Pearlest	1	Kett Electric Laboratory
Weighing boats	Small	2	

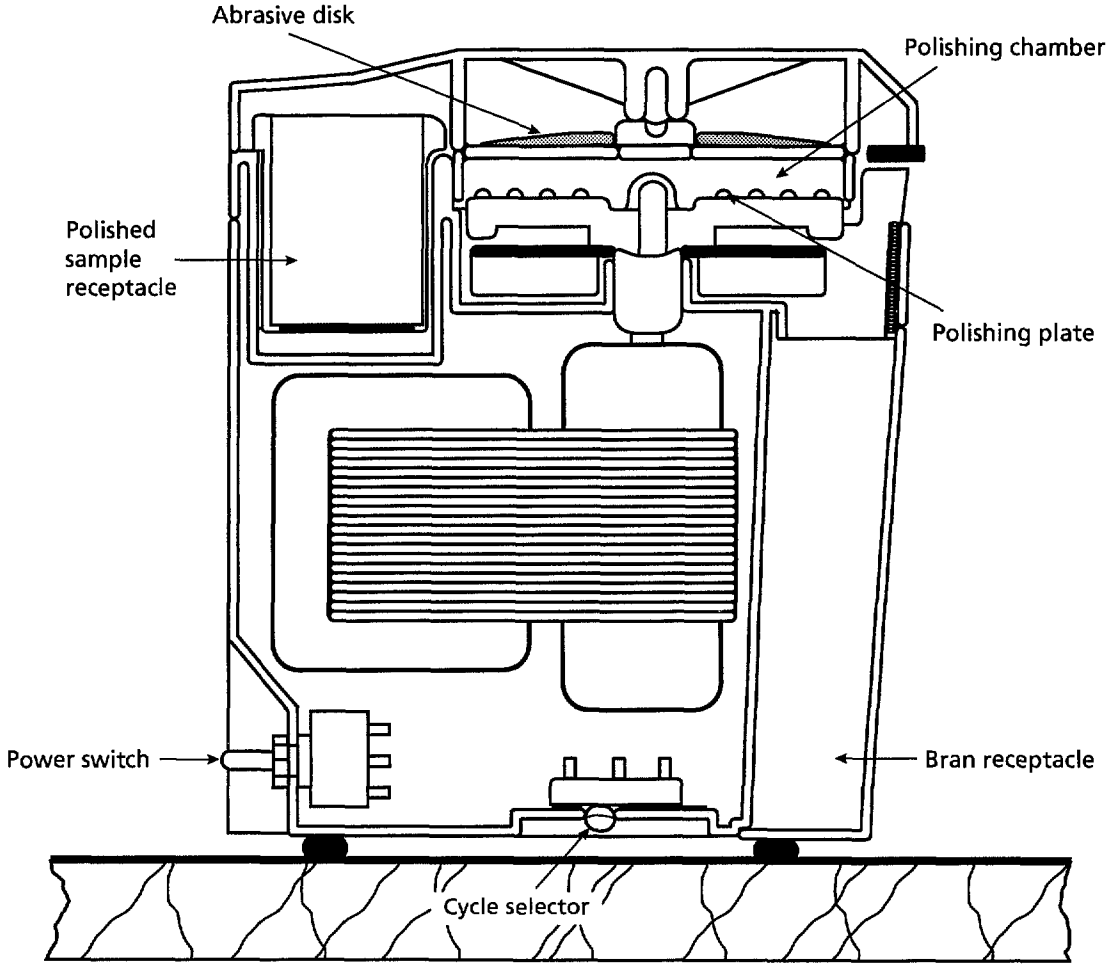

Figure 5—Cross-section from side of the Kett Pearlest dehuller (Kett Electric Laboratory).

Procedure. Weigh 2 x 5 g of millet grain into the weighing boats.

Pour one sample into the polishing chamber.

Set the timer for 2 min.

Start the Pearlest motor and the timer simultaneously.

After 2 min switch the lever on the side of the Pearlest dehuller so that the polished sample receptacle is opened and the dehulled grain then passes into the receptacle by centrifugal force.

Turn off the motor.

Take out the sample receptacle and tip the grain back into the weighing boat.

Repeat the process with the second sample.

Reweigh samples and record final weights.

Calculation. As for the sorghum method.

Percent milling yield—As for the sorghum method.

Percent size fractions—As for the sorghum method, but only four screens are used and these have hole sizes of diameter 2.6, 2.2, 1.7, and 1.0 mm. The three size groups are therefore: large = >2.6 mm; medium = 2.6–1.7 mm; and small = ≤1.7 mm. (Note that it was found the larger grains gave higher milling yields.)

Agtron readings—As for the sorghum method.

Percent water absorption—As for the sorghum method.

This section describes how the following parameters are determined in sorghum and pearl millet:

- moisture content (oven-drying method);
- ash content;
- fat content;
- crude protein content;
- pepsin digestibility;
- tannin content (semiquantitative and quantitative methods);
- malting behavior and diastatic power of malts; and
- α and β amylase activity of malts.

Oven-drying method for the determination of moisture content

Rationale. It is important to determine the moisture content (MC) before carrying out any analysis because the results of analyses are more reliable when reported on a dry-matter basis (DMB), using the MC to convert "as is" results to DMB figures.

Principle. When a sample is weighed and then heated to remove the moisture at a temperature of 100°C overnight, or at 130°C for 2.5 h, and is then reweighed, the difference between the initial and final weights should be equal to the weight of free moisture in the sample.

Equipment.

Item	*Size/ model*	*Quantity*	*Specification/ source*
Moisture dishes	Small	2	Aluminum
Sticking labels	Small	2	
Desiccator	Small	1	Containing silica gel
Cyclone sample	Model MS 3010-017	1	With 0.4-mm screen, mill* Udy Corp. Laboratory
Oven		1	Drying
Spatula	Small	1	
Tongs		1	Crucible
Balance	250 x 0.0001 g	1	Analytical

*Note: A cyclone mill is used here in preference to other grinding mills because the sample remains cool during the milling process due to the air-flow through the mill. Moisture loss during milling is thus negligible (see milling yield test for the principle of the Udy mill).

Procedure. Label the moisture dishes A and B.

Dry the dishes in the oven at 130°C for 30 min.

Remove the dishes from the oven using the tongs, and place them immediately in the desiccator.

Allow the dishes to cool to room temperature.

Mill about 10 g of whole grain.

Still holding the moisture dishes with the tongs, weigh each dish and record its weight (wt).

Weigh ≃ 2 g of whole meal into each dish, recording the exact weight of sample added.

Place the dishes in the oven at 130°C for 2.5 h.

Move the dishes from the oven to the desiccator, using the tongs again, and allow to cool.

Weigh and record the final weight.

Calculation. Substitute all the weights (in grams) into the following equation:

$$\% \text{ MC} = \frac{\text{B–A}}{\text{Initial wt of sample}} \times 100$$

where B = the initial weight of the dish + sample, and A = the final weight of the dish + sample. To express results of analyses on a DMB, multiply the final (as is) result by the following factor:

$$\frac{100}{100-\%\text{MC}}$$

Determination of ash content (ashing)

Rationale. Ash is inorganic residue resulting from the incineration of organic matter. Ashing is useful for:

- preparing samples for mineral analysis;
- determining the proportion of bran to endosperm in selected grain varieties, since the mineral content of bran is 20 times that of endosperm; and
- indicating the thoroughness of separation of the bran from the rest of the grain during decortication (McLaughlin Shull et al. 1987, p.41).

Principle. If material to be ashed is heated to 550°C, all the organic material burns off, leaving only an inorganic residue.

Equipment.

Item	*Size/ model*	*Quantity*	*Specification/ source*
Muffle furnace	Small	1	Set at 550°C

Item	*Size/ model*	*Quantity*	*Specification/ source*
Cyclone sample mill	Model MS 3010-017	1	With 0.4 mm screen, Udy Corp.
Balance	250 x 0.0001 g	1	Analytical
Heat-resistant marker		1	
Crucibles	50 mL	2	Porcelain, T/F
Crucible tongs		1	
Safety glasses		1	
Desiccator	150 mm	1	Containing silica gel

Procedure (AOAC 1984). Turn on the muffle furnace and let it heat up to 550°C.

Label the crucibles using the marker.

Place the crucibles in the furnace for 1 h.

Using the tongs, transfer the crucibles to the desiccator and let them cool to room temperature. (Note that, after placing hot crucibles from the muffle furnace in the desiccator, it is necessary to momentarily raise the lid of the desiccator to permit the expansion and exit of hot air.)

Mill about 20 g of grain.

When they have cooled, weigh the crucibles quickly, to avoid moisture absorption—again handling the crucibles with tongs.

Weigh 3–5 g of ground sample into each crucible, noting the exact weight of the meal added.

Return the crucibles to the muffle furnace at 550°C and leave them overnight to incinerate; a light gray ash should form.

Again transfer the crucibles to the desiccator to cool, then weigh them quickly.

Calculation. Use the following equation:

$$\% \text{ ash} = \frac{B-A}{\text{Initial sample wt}} \times 100$$

where B = weight (g) of the sample and crucible before incineration, and A = weight (g) of the sample and crucible after incineration.

Safety note. Always wear safety goggles when loading or unloading samples from the furnace.

Determination of fat content

Rationale. If fat in a sample may interfere with another analysis, this technique can be used to remove the fat.

Principle. This method is based on the principle of gravimetric extraction of fat from a sample by a solvent, followed by recovery of the fat by evaporation of the solvent.

Equipment.

Item	*Size/model*	*Quantity*	*Specification/ source*
Cyclone sample mill	Model MS 3010-017	1	With 0.4 mm screen, Udy Corp.
Cold Finger Fat Extraction apparatus		1	Glass Blowing Industries
Flask heating unit		1	For 250-mL round-bottomed flasks
Rotary evaporator		1	
Drying oven	Laboratory	1	
Balance	250 x 0.0001 g	1	Analytical
Desiccator	250 mm	1	Containing silica gel
Round-bottomed flasks	250 mL	2	Quickfit
Extraction thimbles	22 x 80 mm	2	Cellulose, Whatman
Cotton-wool		1 ball	Defatted

Reagent (solvent). Petroleum ether (bp 35–60°C) or hexane (bp 69°C).

Procedure (AOAC 1984; Guiragossian et al. 1977).

Mill about 40 g of grain.

Dry the flasks in the oven at 103°C for 30 min and put them in the desiccator.

When the flasks are cool, record their weight.

Weigh 5–10 g of ground sample into the extraction thimbles, recording sample weights exactly.

Place some cotton-wool over the samples in the thimbles to cover the meal and prevent it from splashing out.

Place the thimbles into the thimble holders on the fat-extraction apparatus.

Pour 100 mL of solvent into each flask.

Place the flasks on the heating unit and connect them to the fat-extraction apparatus clamped above the heating unit.

Turn on the heating unit and the water source for the cooling system (the "cold fingers").

Monitor the system carefully and adjust the heat until the solvent is boiling moderately and the condensed solvent is dripping off the cold fingers at a rate of about 16–20 drops min^{-1}.

After 4 h, turn off the heating unit and leave it to cool.

Remove one flask at a time and attach it to the rotary evaporator.

Evaporate the major portion of the solvent.

Evaporate the last traces of the solvent by drying the flasks in the drying oven (103°C) for 30 min.

Cool the flasks in the desiccator and then reweigh them.

Return the flasks to the oven for 10–15 min.

Cool again and reweigh. The difference between the two weighings must not be more than 10 mg. If it is, repeat the drying, cooling, and weighing process until the difference between consecutive weighings is within 10 mg. Use the last weight for the following calculations.

Calculation. Use the following formula:

$$\% \text{ fat} = \frac{B-A}{\text{Sample wt}} \times 100$$

where B = the flask weight + fat (g), and A = the flask weight (g).

Micro-Kjeldahl nitrogen determination

Rationale. Protein is one of the most important nutrients in foods. The protein content of grain can be affected by many different factors, e.g., inherent qualities of the grain itself or management of the crop and agronomic conditions. It is thus useful to be able to determine grain protein content in order to ascertain the grain's nutritional value, or to observe the effect of different treatments on its protein content.

Principle. Kjeldahl nitrogen analysis, which measures protein nitrogen, is one of the most common and most useful techniques in analytical chemistry. Organic nitrogen in the sample is converted to ammonium sulphate by digestion with concentrated sulphuric acid, using copper sulphate as a catalyst. The ammonium is determined from the amount of ammonia liberated by distillation of the digest with alkali. The ammonia liberated is collected in a volume of boric acid and determined by titration with standard sulphuric acid.

Equipment.

Item	*Size/ model*	*Quantity*	*Specification/ source*
Cyclone sample mill	Model MS 3010-017	1	With 0.4 mm screen, Udy Corp.
Fume hood	Laboratory	1	
Digestion rack	Small	1	
Kjeldahl distilling unit	Micro	1	

Item	*Size/ model*	*Quantity*	*Specification/ source*
Magnetic stirrer	Small	1	With 6 stirring bars
Balance	250 x 0.0001 g	1	Analytical
Bunsen burner	Small	1	
Burette	25 mL	1	
Volumetric flasks	500 mL	2	
Volumetric flasks	100 mL	6	
Kjeldahl flasks	50 mL	3	
Erlenmeyer flasks	250 mL	6	
Measuring cylinder	10 mL	1	
Measuring cylinder	50 mL	1	Poly
Reagent bottle	100 mL	1	
Pipettes	10 and 1 mL	1 ea.	Graduated
Pipette	25 ml	1	Bulb
Dropping pipettes		2	
Pipette filler		1	
Spatula	Small	1	
Boiling beads		9	

Reagents.

- Sulphuric acid AR;
- Copper sulphate AR;
- Potassium sulphate AR;
- Boric acid AR;
- Bromocresol green;
- Ethanol;
- Methyl red;
- Sodium carbonate AR;
- Methylene red indicator;
- Sodium hydroxide GPR;
- Distilled water.

Procedure. (Concon and Soltess 1973; Pomeranz and Meloan 1978; AACC 1983). There are four stages, as follows:

STAGE 1: REAGENT PREPARATION

- 10% copper sulphate solution: dissolve 10 g copper sulphate in about 60 mL distilled water in a 100-mL volumetric flask, and make up to 100 mL with distilled water.
- 2% boric acid solution: dissolve 2 g boric acid in about 60 mL distilled water in a 100-mL volumetric flask, and make up to 100 ml with distilled water.

- 0.1% bromocresol green in ethanol: dissolve 0.1 g bromocresol green in about 60 mL ethanol in a 100-mL volumetric flask, and make up to 100 mL with ethanol.
- 0.1% methyl red in ethanol: dissolve 0.1 g methyl red in about 60 mL ethanol in a 100-mL volumetric flask, and make up to 100 mL with ethanol.
- Bromocresol green-methyl red indicator: pipette 25 mL 0.1% methyl red solution into a 100-mL volumetric flask and make up to 100 mL with 0.1% bromocresol green solution.
- 50% sodium hydroxide (NaOH) solution: dissolve 50 g NaOH in about 60 mL distilled water in a 100-mL volumetric flask, and make up to 100 mL with distilled water.
- 1N sulphuric acid (H_2SO_4) solution: pour about 300 mL distilled water into a 500-mL volumetric flask and add 13.9 mL concentrated sulphuric acid. Make up to 500 mL with distilled water.
- 0.05N H_2SO_4 solution: pipette 25 mL of 1N H_2SO_4 into a 500-mL volumetric flask, and make up to 500 mL with distilled water. Standardize this solution as follows: Weigh exactly 0.06 g sodium carbonate into a 250-mL conical flask. Add 50 mL of distilled water and a few drops of methylene red indicator. Heat the flask whilst titrating in order to expel any carbon dioxide formed that will interfere with the indicator. Titrate with the H_2SO_4 solution until the mixture turns pink. Use the following equation to calculate the molarity (M) of the H_2SO_4 solution:

$$M = \frac{\text{Weight of sodium carbonate (g)} \div 105.988 \times 1000}{H_2SO_4 \text{ titre (mL)}}$$

Multiply this molarity by two to get the normality of the solution.

STAGE 2: DIGESTION

Mill about 4 g of grain.

Into two dry, 50-mL Kjeldahl flasks introduce exactly 0.5 g of ground sample and add 1 g potassium sulphate, 1 mL of 10% copper sulphate solution, and 3 boiling beads. Shake the flasks to mix; then add 10 mL of concentrated H_2SO_4 and swirl.

Prepare a blank under the same conditions, but with no sample added.

Heat the flasks (inclined) on the digestion rack in the fume hood. Maintain a low heat until the sample starts to boil, and then slowly increase the heat to maximum, swivelling the flasks intermittently to remove charred matter from their walls.

After fuming has ceased and the boiling mixture is clear (green, copper), allow the digestion to proceed for about 30 min more.

Then turn off the digestion rack and allow the flasks to cool.

When the bases of the flasks are cool enough to be held in the hand, slowly add about 10 mL of distilled water. Mix immediately following this water addition to prevent crystallization of the potassium sulphate.

At this stage the flasks can be left overnight or for a few days under refrigeration, by sealing the flasks to prevent ammonia absorption from the air.

STAGE 3: DISTILLATION

Light the bunsen burner under the distilling unit's steam generator and open the condenser water.

Run steam through the assembly for a few minutes to warm up the apparatus and clear the line of any residual ammonia.

Place a 250-mL Erlenmeyer flask containing 10 mL 2% boric acid solution plus 2 drops of bromocresol green-methyl red indicator under the condenser stem to collect the distillate. Be sure that the tip of the condenser stem is below the surface of the boric acid solution.

Slowly pour a sample into the unit and then slowly add ≃ 30 mL of 50% NaOH solution (about 3 mL alkali for each mL of concentrated sulphuric acid used in the original digestion). When the sample turns gray, enough alkali has been added. Rinse through with distilled water and close the stopcock.

Allow the distillation to proceed for 7.5 min.

At the end of the distillation, lower the receiving flask so that the distillate washes any remaining ammonia from the tip of the condensing unit. Also wash the tip with distilled water.

After the distillation, wash out the distillation chamber with distilled water.

Repeat this distillation for the second sample and the blank.

This completes the distillation phase. At this stage the flasks can be sealed again and kept overnight.

STAGE 4: TITRATION

Fill the burette with 0.05N H_2SO_4 solution.

Place a magnetic stirring bar in each flask and place one of the flasks on the stirrer.

Titrate until the end-point arrives, i.e., when the solution turns from blue-green to pink.

Note the volume of acid used (titre).

Calculations. The percent crude protein (% CP) in the sample can be calculated using the following formula (AACC 1983):

$$\% \text{ CP} = \frac{(a)(b)(14)(6.25)(100)}{c}$$

where a = normality of the acid, i.e., ≃ 0.05; b = volume of standard acid used (mL), corrected for the blank (i.e., the sample titre minus the blank titre); c = sample weight (mg), i.e., ≃ 500; and 6.25 = conversion factor for protein from % nitrogen.

Safety notes. When preparing the 1N H_2SO_4, always put water into the flask first and then add the acid, never add water to the concentrated acid because there will be a violent reaction.

When pipetting the concentrated acid, always use the pipette filler to avoid sucking this corrosive liquid up into one's mouth.

Initially, during digestion, heat the flasks very slowly and swivel them frequently or they might explode. For this reason it is advisable to wear heat-resistant gloves. Once the digestion mixture is boiling steadily at maximum heat, and all the charred matter has been washed down into the bottom, swivelling the flasks is no longer necessary.

After digestion ensure that the acid is cool before adding the water, and add the water very slowly or there will be a violent reaction.

Safety goggles must always be worn when starting a distillation—handling hot, concentrated acid and alkali is dangerous.

Pepsin digestibility

Rationale. This method, developed by Axtell et al. (1981) and modified by Mertz et al. (1984), is less time-consuming and less expensive than rat-feeding studies, and has been more reliable in showing digestibility differences between sorghum and other grains (Mertz et al. 1984). It is also useful for comparing digestibility levels of different sorghum food preparations.

Principle. In-vitro digestion of protein by the enzyme pepsin is used to simulate the digestion values found in humans (Mertz et al. 1984). In this procedure, the initial protein content of a sample is determined; the sample is then digested with pepsin; and, after digestion, the protein content of the sample is again determined. The difference between the initial and final protein contents gives an indication of the quantity of protein from the sample that was digested. The procedure can be adapted to show digestibility of either raw or cooked samples.

Equipment.

Item	*Size/model*	*Quantity*	*Specification/ source*
All equipment given for micro-Kjeldahl nitrogen determination, plus:			
Centrifuge	6 000 rev min^{-1}	1	To accommodate 50–mL tubes, IEC
Magnetic stirrer	Laboratory	1	With stirring bar
pH meter	Laboratory	1	
Water-bath	Laboratory	1	Circulating (37°C)
Water-bath	Small	1	Boiling
Ice bath	Small	1	
Centrifuge tubes	50 mL	3	Polyethylene
Beakers	250 + 1 000 mL	1 ea.	
Volumetric flasks	1 000 + 100 mL	1 ea.	

Item	*Size/model*	*Quantity*	*Specification/ source*
Filter flask	250 mL	1	
Buchner funnel	50 mm	1	
Stirring rod		1	
Dropper		1	
Spatula	Small	1	
Filter paper	5 cm, no.3	3 pieces	Nitrogen-free, Whatman
Tongs		1	

Reagents. All reagents given for the micro-Kjeldahl nitrogen determination procedure, plus:

- Porcine pepsin: activity 1 200–2 000 units mg^{-1} of protein (Sigma);
- Potassium dihydrogen phosphate GPR;
- Hydrochloric acid AR.

Procedure (Mertz et al. 1984). There are four stages:

STAGE 1: REAGENT PREPARATION

Prepare reagents as for micro-Kjeldahl nitrogen determination, plus the two following solutions:

- 0.1M potassium dihydrogen phosphate (KH_2PO_4) buffer: weigh 13.6 g of KH_2PO_4 into a 1 000-mL beaker. Add about 750 mL of distilled water and dissolve. Place the pH meter electrode into the solution and adjust the pH to 2 by adding concentrated hydrochloric acid (about 10–13 mL). Transfer this solution into a 1 000 mL volumetric flask, and dilute to volume with distilled water.
- Buffered pepsin solution: pipette 80 mL of the KH_2PO_4 buffer into a 250-mL beaker. Add 0.15 g of pepsin and mix on the stirring plate for 3 h. Transfer this solution to a 100-mL volumetric flask and dilute to volume with distilled water. (Note that the solution must be made immediately before use.)

STAGE 2: INITIAL PERCENT PROTEIN DETERMINATION

Determine the initial protein content of the sample using the micro-Kjeldahl nitrogen determination method.

STAGE 3: PEPSIN DIGESTION

Place 0.2 g of the sample into two of the 50-mL centrifuge tubes.

To determine the digestibility of a raw sample, skip the following cooking step.

To determine the digestibility of a cooked sample, cook as follows: add 2 mL of distilled water to the 0.2-g sample and shake, then place the tubes in a boiling water bath for 20 min.

To the cooked or uncooked samples, add 20 mL of buffered pepsin solution; mix thoroughly using the stirring rod, then rinse the rod off into the mixture with 15 mL of buffered pepsin solution.

Prepare a blank tube in the same manner as above, only omitting the sample.

Place the tubes in the water bath at 37°C and shake gently every 20 min.

After 2 h, place the tubes in an ice bath for 30 min to attain 4°C. Cool the centrifuge tube holders in the ice bath as well.

Centrifuge the tubes at 6 000 rev min^{-1} (11 270 x g) for 15 min.

Remove the supernatant with a dropper and discard.

Add 10 mL of buffer solution (0.1M KH_2PO_4) to each tube, shake well, and centrifuge as before.

Remove the supernatant and discard.

Using the spatula, remove the residue from the first tube and place it in the centre of a piece of the filter paper on the buchner funnel.

Apply suction to the filter flask and rinse the remaining residue from the tube into the funnel using 5 mL of buffer.

Filter the second sample residue in the same way, using a clean piece of filter paper.

Roll the two filter papers up and insert them into the Kjeldahl flasks.

Dry the flasks in the oven at 100°C for 15 min.

STAGE 4: FINAL PERCENT PROTEIN DETERMINATION

Into the Kjeldahl flask containing filter paper and sample (residue), introduce 10 mL of concentrated H_2SO_4, 1 g potassium sulphate, and 1 mL of 10% copper sulphate solution. Leave to stand for a while.

Continue with digestion, distillation, and titration as for the micro-Kjeldahl nitrogen determination procedure.

Calculation. Calculate percent protein before and after pepsin digestion, using the formula given in the micro-Kjeldahl nitrogen determination method; then use the results in the following equation:

$$\% \text{ protein digestibility} = \frac{A-B}{A}$$

where A = % protein in the sample, and B = % protein after pepsin digestion.

Tannin content determination

Rationale. In sorghum, tannins are predominantly found in the pericarp and pigmented testa layer. Therefore, red sorghums and, in particular, brown sorghums, that have a testa, are usually high-tannin sorghums. Tannins in sorghums have agronomic advantages such as protecting the seed from attack by molds, insects, and birds and from preharvest germination, but they also have antinutritional effects; they bind to and precipitate proteins (Hahn et al. 1984).

Two methods for tannin content determination are given below: a rapid semiquantitative method, and the quantitative vanillin-HCl method. The first is a screening method, and the second is a more analytical procedure.

Rapid tannin analysis: semiquantitative—

Rationale. This tannin analysis method provides a rapid and convenient visual estimation of the quantity of polyphenols present in sorghum grain, without the use of instrumentation and with the mini-

mum of glassware. The method has proved useful because, in high-tannin sorghum, most of the polyphenols present are tannins. Because of the simplicity and rapidity of this test, it can be used for screening a large number of samples, and thus can be included as one of the routine GQE tests. Forty samples in duplicate can be handled each day by one operator.

Principle. This is a subjective method based on the reduction of ferric ions to ferrous ions by tannins and other polyphenols, followed by the formation of a colored ferricyanide-ferrous complex commonly known as Prussian Blue (Price and Butler 1977). The intensity of the color formed enables the tannin content to be determined, using a set of standard solutions as a reference.

Equipment.

Item	*Size/ model*	*Quantity*	*Specification/ source*
Balance	750 x 0.1 g	1	Toploader
Cyclone sample mill	Model MS 3010-017	1	With 0.4 mm screen, Udy Corp.
Weighing boats	Small	4	
Filter paper	15 cm, no.1	3 pieces	Whatman
Funnel	90-mm diam.	1	Glass
Beaker	1 000 mL	1	T/F
Pipettes	1, 2, 5, 10 mL	1 ea.	Graduated
Pipette	10 mL	2	Bulb
Bulb pipette filler		1	
Erlenmeyer flask	1 000 mL	1	Glass
Volumetric flasks	1 000 mL	3	Glass
Volumetric flasks	250 mL	2	Glass
Volumetric flask	100 mL	1	Glass
Volumetric flask	25 mL	1	Glass
Test tubes	15 mL	12	Glass, tapered

Reagents.

- Hydrochloric acid AR;
- Ferric chloride AR;
- Potassium ferricyanide AR;
- Methanol AR;
- (+)-catechin hydrate (Sigma no.C-1251);
- Distilled water.

Procedure. There are two stages:

STAGE 1: REAGENT PREPARATION

- 0.1M hydrochloric acid (HCl) solution: pipette 8.3 mL of concentrated HCl into a 1 000-mL volumetric flask and dilute to volume with distilled water.

- 0.1M ferric chloride ($FeCl_3$) solution: dissolve 29.0 g of $FeCl_3.6H_2O$ or 16.3 g of $FeCl_3$ in a 1 000-mL volumetric flask with ≃ 600 mL distilled water. Add ≃ 400 mL 0.1M HCl to acidify the solution and make it up to the final volume of 1 000 mL. Pour this solution into the beaker through one filter paper placed in the funnel, then repeat this filtration with the second and then the third piece of filter paper, in order to remove the undissolved impurities from the solution (which should be yellow).
- 0.008M $FeCl_3$ solution: pipette 20 mL of 0.1M $FeCl_3$ solution into a 250-mL volumetric flask and dilute to volume with distilled water.
- 0.1M potassium ferricyanide ($K_3Fe(CN)_6$) solution: dissolve 32.9 g of $K_3Fe(CN)_6$ in distilled water in a 1 000 mL volumetric flask and make up to volume with distilled water.
- 0.004M $K_3Fe(CN)_6$ solution: pipette 10 mL of 0.1M $K_3Fe(CN)_6$ solution into a 250-mL volumetric flask and dilute to volume with distilled water.
- 1 mg mL^{-1} (1 000 ppm) stock catechin solution: dissolve 0.1 g of catechin in about 60 mL of methanol in a 100-mL volumetric flask, then make up to 100 mL with methanol. This solution can be stored for several months in a stoppered reagent bottle under refrigeration.

STAGE 2: TANNIN CONTENT DETERMINATION

Mill a small quantity of the grain to be tested.

Weigh 0.035 g of the meal into two of the 15-mL tubes.

Add 10 mL of the 0.004M $K_3Fe(CN)_6$ solution and mix well.

Add 0.5 mL of the 0.008M $FeCl_3$ solution, swirl, and observe the change in color.

Now prepare a set of standard solutions using the stock catechin solution. Make up a 200-ppm working solution by pipetting 5 mL of the stock solution into the 25-mL volumetric flask and make up to volume with methanol. From the working solution, pipette the following volumes into the 10 remaining tapered test tubes: 0.01 mL, 0.013 mL, 0.025 mL, 0.05 mL, 0.1 mL, 0.15 mL, 0.2 mL, 0.25 mL, 0.3 mL, and 0.4 mL; and make up these volumes to 1 mL with methanol. This gives a set of standards of 0.2, 0.26, 0.5, 1.0, 2.0, 3.0, 4.0, 5.0, 6.0 and 8.0% catechin equivalents (% CE), respectively.

To these standards add again the 10 mL of 0.004M $K_3Fe(CN)_6$ and the 0.5 mL of 0.008M $FeCl_3$ added to the sample, mix well, and leave for 5 min.

Shake the sample solution and the standard solutions, then compare the color of the sample with the standards. From this comparison one can obtain an approximate % CE figure for the amount of tannin in the sample, and classify the sample into one of the groups shown in Table 2.

Table 2—Classification of samples in rapid tannin analysis.[1]

Sample Color	Tannin Group	Tannin Level	Range of Catechin Equivalents (%)
Yellow	I	None	0.00
Light green	I	Low	0.10–0.25
Blue-green	II	Intermediate	0.26–0.99
Dark blue	III	High	1.00 and above

1. Source: Price and Butler 1977 (adapted).

Note that it is advisable to use a grain check to verify these results. For instance, high-tannin sorghum DC 75 determined by the vanillin-HCl method has 4–6% CE, Larsvyt 19 has about 0.5% CE, and SV 1 has less than 0.1%.

Safety note. When pipetting the concentrated acid, always use the pipette filler to avoid sucking this corrosive liquid up into one's mouth.

Assay by vanillin-hydrochloric acid method: quantitative—

Rationale. This assay method is not subjective, and therefore gives a more accurate measure of tannin content; but it takes more time to determine tannin content than when the rapid semiquantitative method is used.

Principle. The tannins in sorghum are condensed tannins called proanthocyanidins. Proanthocyanidins, as well as leucoanthocyanidins (catechins), react with vanillin in the presence of HCl to give a bright red color, and this is the basis for the colormetric vanillin-HCl procedure (Hahn et al. 1984).

Equipment

Item	*Size/ Model*	*Quantity*	*Specification/ Source*
Cyclone sample mill	Model MS 3010-017	1	With 0.4-mm screen, Udy Corp.
Centrifuge	4 500 rev min^{-1}	1	To accommodate 15-mL tubes, IEC
Wrist-action shaker		1	
Balance	250 x 0.0001 g	1	Analytical
Spectrophotometer	Spectronic 21, model UVD or similar		
Erlenmeyer flasks	50 mL	2	Glass
Volumetric flasks	25 mL	2	Glass
Volumetric flasks	100 mL	5	Glass
Pipettes	1 and 10 mL	1 ea.	Graduated

Item	*Size/ Model*	*Quantity*	*Specification/ Source*
Bulb pipette filler		1	
Beaker	250 mL	1	Glass
Centrifuge tubes	15 mL	2	
Test tubes	15 mL	15	Glass, tapered
Cuvettes	1 cm	2	Glass
Labeling tape		1 roll	
Parafilm		1 roll	

Reagents.

- Hydrochloric acid AR;
- Methanol AR;
- (+)-catechin hydrate (Sigma no.C-1251);
- Vanillin.

Procedure (Burns 1963; Maxson and Rooney 1972; Price et al. 1978). There are two stages:

STAGE 1: REAGENT PREPARATION

- 8% hydrochloric acid (HCl) in methanol: pipette 8 mL HCl into a 100-mL volumetric flask. Make up to volume with methanol.
- 1% vanillin in methanol: dissolve 1 g of vanillin in about 60 mL of methanol in a 100-mL volumetric flask, then make up to 100 mL with methanol.
- Vanillin-HCl reagent: just before use, mix the two solutions 100 mL 8% HCl in methanol and 100 mL 1% vanillin in methanol together in the beaker. (Note that if a trace of red appears in this solution do not use it; prepare afresh.)
- 4% HCl in methanol: pipette 4 mL HCl into a 100-mL volumetric flask. Make up to volume with methanol.
- 1% HCl in methanol: pipette 1 mL HCl into a 100-mL volumetric flask. Make up to volume with methanol.
- 1 mg mL^{-1} (1 000 ppm) stock catechin solution: dissolve 0.1 g of catechin in about 60 mL of methanol in a 100-mL volumetric flask, then make up to 100 mL with methanol. (Note that this is the same stock catechin solution used in the rapid tannin analysis method; it can be stored for several months in a stoppered reagent bottle under refrigeration.)

STAGE 2: TANNIN CONTENT DETERMINATION

Start by labeling the two Erlenmeyer flasks, the two centrifuge tubes, the two 25-mL volumetric flasks, and two of the test tubes A and B.

Mill about 3 g of grain.

Weigh out 0.25 g milled sample into the two Erlenmeyer flasks, and pipette 10 mL of 4% HCl in methanol into each flask. Close the flasks with Parafilm.

Shake for 20 min on a wrist-action shaker.

Transfer the extracts into the two centrifuge tubes and centrifuge for 10 min at 4 500 rev min^{-1} (3 300 x g).

Transfer the supernatant aliquots to the 25-mL volumetric flasks.

Rinse back the residues from the centrifuge tubes into the original conical flasks using 5 mL of 1% HCl in methanol.

Cover with Parafilm and shake for another 20 min.

Centrifuge again for 10 min (4 500 rev min^{-1}) and combine the aliquots with the first extracts.

Make extracts up to volume (25 mL) with methanol and mix well.

Pipette 1 mL of each extract into the corresponding labeled test tube.

Now prepare a set of catechin standard solutions. Label 11 of the test tubes as follows: 50, 100, 200, 300, 400, 500, 600, 700, 800, 900, and 1 000 (these figures will indicate the concentration, in $\mu g\ mL^{-1}$, of the solutions). Pipette 0.05, 0.1, 0.2, 0.3, 0.4, 0.5, 0.6, 0.7, 0.8, 0.9, and 1.0 mL respectively of stock catechin solution into the tubes, and make up the volume of the first 10 tubes to 1 mL with methanol.

Slowly add 5 mL of vanillin-HCl reagent (freshly prepared) to each standard solution and to the two 1-mL sample extracts.

Prepare individual sample blanks by adding 5 mL of 4% HCl in methanol to 1 mL aliquots of the extracts pipetted into the last two test tubes.

Read the absorbances of standard solutions, sample extracts, and sample blanks in the spectrophotometer at 500 nm exactly 20 min after adding vanillin-HCl reagent to the standard solutions and sample extracts.

Note that the spectrophotometer should be turned on 1 h before use, and the wavelength set at 500 nm. Just before use adjust again, using a cuvette of methanol, so that the absorbance reads zero.

Calculation. Prepare a standard curve of absorbance (y) against catechin concentration (x) from the catechin standard solution readings, and find the intercept and slope of this curve. Subtract the sample blank absorbance from the sample absorbance, and substitute this corrected absorbance into the following regression equation in order to find the concentration of the sample extracts:

$$y = a + bx$$

where a = intercept, and b = the slope of the graph.

Convert this concentration (in $\mu g\ mL^{-1}$) into mg catechin mL^{-1} and calculate the percent catechin equivalents (% CE) as follows (Gomez and Gomez 1976):

$$\% \text{ CE} = \frac{\text{CC x VM}}{\text{VE x wt}} \text{ x } 100$$

where CC = catechin concentration (mg mL^{-1}); VM = volume made up (mL), i.e., 25; VE = volume of extract (mL), i.e., 1; and wt = weight of sample (mg), i.e., $\simeq$ 250.

Classify samples into groups according to Table 2.

Malting behavior and diastatic determination of malts

Rationale. The diastatic activity of malts is determined when selecting grain for use in brewing. The higher the diastatic power, the better the malt quality.

Principle. The methods have been adapted from Daiber (1971). Diastatic determination has been modified to a micro-method in order to reduce the sample size to 0.5 g malt and to permit the testing of 12 samples per day. Diastatic activity determination is based on:

- malting the grain to activate diastatic enzymes;
- the action of the diastatic enzymes on a standard starch substrate; and
- determination of reducing sugar, produced by hydrolysis of the starch, by iodometric titration.

The diluted sample of starch hydrolyzed by the malt extract is mixed with a ferricyanide solution and boiled to induce a reaction. A portion of the ferricyanide (proportional to the amount of sugar present) is thus reduced by the sugar to ferrocyanide, and the remaining ferricyanide reacts with potassium iodide to form iodine. The liberated iodine is then titrated with standard sodium thiosulphate in the presence of a starch indicator.

Equipment.

Item	*Size/ model*	*Quantity*	*Specification/ source*
Germinating cabinet	Small	1	
Balance	750 x 0.01 g	1	Toploader
Balance	250 x 0.0001 g	1	Analytical
Incubator	Laboratory	1	With fan to circulate air in chamber
Oven	Laboratory	1	Drying
Cyclone sample mill	Model MS 3010-017	1	With 0.4-mm screen, Udy Corp.
Centrifuge	3 000 rev min^{-1}	1	To accommodate 15-mL tubes, IEC
Water bath	Laboratory	1	Circulating
Water bath	Laboratory	1	Concentric (boiling)
Magnetic stirring hot plate	Laboratory	1	With a stirring bar
Timer		1	Minutes and seconds
Spray bottle	Small	1	

Item	*Size/ model*	*Quantity*	*Specification/ source*
Repeatable pipette	5 mL	1	
Bulb pipette filler		1	
Pipette	25 mL	1	Bulb
Pipettes	1, 2, 5 mL	2 ea.	Graduated
Volumetric flasks	1 000 mL	6	Glass
Volumetric flask	500 mL	1	Glass
Volumetric flasks	100 mL	2	Glass
Volumetric flasks	25 mL	6	Glass
Erlenmeyer flasks	50 mL	6	Glass
Reagent bottle	1 000 mL	1	Amber glass
Burette	25 mL	1	
Beaker	1 000 mL	1	Glass
Beaker	50 mL	1	
Beaker	250 mL	1	Plastic
Centrifuge tubes	15 mL	2	
Measuring cylinder	10 mL	1	
Petri dishes		2	
Bags	165 x 254 mm	2	Clear plastic
Dissecting needle		1	
Rubber bands	Small	2	
Bucket	5 000 mL	1	Plastic
Trough	500 x 250 mm	1	Stainless steel
Polishing screen	3-mm diam. holes	1	
Test tube rack		1	
Stirring rod		1	
Parafilm		1 roll	
Labeling tape		1 roll	
Filter paper	9 cm, no.1	4 pieces	Whatman
Newspaper			Several sheets

Reagents.

- Sodium acetate trihydrate ($CH_3COONa.3H_2O$) AR;
- Sodium hydroxide CP;
- Potassium ferricyanide AR;
- Sodium carbonate anhydrous AR;
- Glacial acetic acid AR;
- Potassium chloride AR;
- Borax AR;
- Zinc sulphate heptahydrate ($ZnSO_4.7H_2O$) AR;

- Sodium thiosulphate ($Na_2S_2O_3.5H_2O$) AR;
- Potassium dichromate AR;
- conc. Hydrochloric acid AR;
- Potassium iodide AR;
- Soluble starch AR;
- Peptone;
- Distilled water.

Procedure. There are five stages:

STAGE 1: GERMINATION COUNTS

Prior to the steeping of grain to be malted, it is necessary to carry out a test on the viability of the grain by making germination counts. If germination falls below 65% the grain is not viable enough to malt because diastatic enzymes are activated only during germination.

Count out two samples of 100 kernels of grain.

Place each sample in a petri dish on two filter paper disks moistened with 10 mL of distilled water.

Place the dishes in the germinator set at 28°C.

Make germination counts after 24 and 48 h.

Also allocate a mold score, based on the following scale for the samples after 24 h:

Score	*Moldiness* (%)
0	0
1	1 to 19
2	20 to 39
3	40 to 59
4	60 to 79
5	80 to 100

STAGE 2: STEEPING

First, perforate the clear plastic bags manually using the dissecting needle (two holes per square centimetre are sufficient), and label the bags A and B.

Then weigh 25 g of grain into each plastic malting bag and tie up the tops of the bags with the rubber bands.

Set the incubator to maintain a temperature of 25°C.

Immerse the bags in a bucket of distilled water and place the bucket in the incubator.

Take the bucket out of the incubator and remove the samples from the water after every 3 h, to give them a 30-min air-rest.

During the air-rest, place the malting bags on some sheets of newspaper to drain out surface moisture.

The optimum steeping time for sorghum is 16 h, and for pearl millet 10 h.

After steeping, drain the grain and then weigh the samples (steeped weight).

STAGE 3: MALTING

Reset the incubator to maintain a temperature of 28°C.

Fill the stainless steel trough with water and place this in the bottom of the incubator chamber in order to maintain a high humidity in the chamber during malting.

After weighing the steeped samples, place them back in their malting bags and lay the bags on the shelves of the incubator.

For the first 2 days of malting, moisten the samples twice a day at 0800 and 1600 by spraying a fine mist of water on them for 5 sec; then turn them over.

On the 3rd and 4th days of malting, spray the samples in the morning, and turn them over in the afternoon.

The malting period for sorghum is 4 days, and for pearl millet 3 days.

At the end of the malting period, weigh the grain (which is now called green malt).

After weighing, dry the malts in the oven at 50°C for 24 h, then weigh the dry malt.

Polish the malts on the polishing screen and weigh once more.

STAGE 4: REAGENT PREPARATION

- 1N acetic acid solution: pour ≃ 300 mL distilled water into the 500 mL volumetric flask. Pipette 28.7 mL glacial acetic acid into the flask and make up to 500 mL with distilled water.
- Buffer solution for starch: dissolve 68 g sodium acetate in a 1 000 mL volumetric flask with 500 mL of 1N acetic acid, and dilute to 1 000 mL with distilled water. (Note that this solution can be kept in a refrigerator for several months, as long as the pH remains at 4.7.)
- 0.5N sodium hydroxide (NaOH) solution: dissolve 20 g sodium hydroxide in about 500 mL distilled water in a 1 000-mL volumetric flask and make up to 1 000 mL with distilled water.
- Acetic acid-salt solution: dissolve 70 g potassium chloride and 20 g zinc sulphate in about 500 mL distilled water in a 1 000-mL volumetric flask. Add 200 mL glacial acetic acid to the flask and dilute to 1 000 mL with distilled water.
- Concentrated sodium hydroxide solution: in the plastic 250-mL beaker dissolve 50 g sodium hydroxide in 50 mL water. Cool before use.
- Potassium iodide solution: dissolve 50 g potassium iodide in about 60 mL distilled water in a 100-mL volumetric flask. Add two drops of concentrated sodium hydroxide solution. Dilute to 100 mL with distilled water. The solution should be colorless.
- 0.05N sodium thiosulphate solution: dissolve 12.41 g sodium thiosulphate and 3.8 g borax as a preservative in about 600 mL distilled water in a 1 000 mL volumetric flask. Dilute to 1 000 mL with distilled water.

Standardize this solution as follows: weigh exactly 0.1 g potassium dichromate and dissolve it in 50 mL distilled water. Add 2 g potassium iodide and 5 mL concentrated hydrochloric acid. Mix and titrate with sodium thiosulphate solution until the color changes to yellow-green. Add a few mL of starch indicator and titrate to a light green shade when the color of the starch iodine complex is discharged. Use the following equation to calculate the exact normality (N) of the sodium thiosulphate:

$$N = 6 \times \frac{\text{weight of dichromate (g)} \div 294.181 \times 1\,000}{\text{thiosulphate titre (mL)}}$$

- 0.05N alkaline ferricyanide solution: dissolve 16.5 g potassium ferricyanide and 22 g sodium carbonate in about 600 mL distilled water in a 1 000-mL volumetric flask. Dilute to 1 000 mL with distilled water. Store it in an amber bottle away from light.

  Standardize this solution as follows: to 10 mL of the alkaline ferricyanide solution add 25 mL of acetic acid-salt solution, 1 mL of potassium iodide solution, and 2 mL of starch indicator. Titrate with the above sodium thiosulphate solution until the blue starch iodine color is discharged. Calculate the normality (N) of the ferricyanide using the following equation:

$$N = \frac{\text{thiosulphate normality} \times \text{thiosulphate titre (mL)}}{10}$$

- Buffered starch solution: pour about 700 mL distilled water into the 1 000-mL glass beaker. Place this on the magnetic stirring hot plate and bring it to the boil. Weigh 20 g dry starch into the 50 mL beaker and add a little water to form a slurry. Pour the slurry carefully into the boiling water without stopping the boil. Boil for another 4 min, then add about 100 mL cold distilled water and place in the water bath to cool down to approximately 30°C. Pour this into a 1 000 mL volumetric flask and add 20 mL buffer solution for starch. Make up to the mark with distilled water, and store at 30°C.
- 2% peptone solution: dissolve 2 g of peptone in about 70 mL distilled water in a 100 mL volumetric flask. Dilute to 100 mL with distilled water.

STAGE 5: DIASTATIC ACTIVITY DETERMINATION

Mill about 10 g of each sample (A and B) of polished malt.

Weigh 0.5 g of each milled malt sample into the centrifuge tubes labeled A and B, and add 10 mL of peptone solution to each.

Close the tubes with Parafilm, shake them, then stand them in the test-tube rack which is placed in the circulating water bath at 30°C.

Leave the samples in the water bath for 2.5 h to extract the diastatic enzymes and, during this extraction period, shake the tubes once every 20 min.

At the end of the extraction, centrifuge the suspensions for 2 min at 3 000 rev min^{-1} (1 400 x g).

Label the six 25-mL volumetric flasks as follows: A_1, A_2, A_{Bl}, B_1, B_2, and B_{Bl}.

Pipette 20 mL of buffered starch solution into each flask, and into the flasks labeled A_{Bl} and B_{Bl}, pipette 4 mL 0.5N NaOH solution (these are the blank controls).

Set the timer for 30 min and, at 30-sec intervals, dispense a 0.5-mL aliquot of the supernatant extract from centrifuge tube A into the flasks labeled A_1, A_2, and A_{Bl}; then dispense the same aliquot from tube B into flasks B_1, B_2, and B_{Bl}. Immediately after dispensing the extract, stopper each flask, invert it twice, and place in the waterbath at 30°C.

Exactly 30 min after dispensing the first extract (A_1) remove that flask from the waterbath and add 4 mL of 0.5N NaOH to it. Remove the other flasks, again at 30-sec intervals, adding NaOH to the flasks labeled A_2, B_1, and B_2, to stop the digestion of the starch by the malt extract. This stage must be carefully timed so that digestion proceeds for exactly 30 min in each sample flask—although for the blanks it is not critical.

Label the 50-mL Erlenmeyer flasks in the same way the 25-mL volumetric flasks were labeled, and pipette 4 mL 0.05N alkaline ferricyanide solution into each Erlenmeyer flask.

Transfer a 2-mL aliquot from each volumetric flask into the respective Erlenmeyer flask.

Place the Erlenmeyer flasks onto the concentric boiling water bath and leave them there for 20 min. Allow the flasks to cool before continuing.

Add 10 mL acetic acid-salt solution and 0.4 mL potassium iodide solution to each flask and titrate with 0.05N sodium thiosulphate under magnetic stirring, until the blue color of the starch-iodine complex is discharged.

Calculations: germination counts. Calculate the average percent germination after 24 and 48 h; and the average mold score (24 h).

Calculations: steeping. After this stage the degree of steeping is calculated:

$$\text{Degree of steeping (\%)} = \frac{\text{steeped wt—initial grain wt}}{\text{initial grain wt}} \times 100$$

Calculations: malting. All the stages during malting facilitate compilation of the malting data. These comprise: green malt moisture; malting loss; seedling yield; and total loss:

$$\text{Green malt moisture (\%)} = \frac{\text{green malt wt—dry malt wt}}{\text{green malt wt}} \times 100$$

$$\text{Malting loss (\%)} = \frac{\text{initial grain wt—dry malt wt}}{\text{initial grain wt}} \times 100$$

$$\text{Seedling yield (\%)} = \frac{\text{dry malt wt—polished malt wt}}{\text{dry malt wt}} \times 100$$

$$\text{Total loss (\%)} = \frac{\text{initial grain wt—polished malt wt}}{\text{initial grain wt}} \times 100$$

Calculations: diastatic activity determination. Diastatic power (DP) of malt is calculated as below, and expressed in diastatic units:

$$DP = \frac{B\text{-}A}{100\text{-}M} \times \frac{VE \times VD \times 2\,000 \times f}{WM \times AE \times AD}$$

where A = titre of thiosulphate used for the sample (mL);

B = titre of thiosulphate used for the blank (mL);

AD = aliquot of digest for sugar determination (mL), i.e., 2.0;

AE = aliquot of extract for sugar determination (mL), i.e., 0.5;

f = normality of thiosulphate, i.e., $\simeq 0.05$;

M = % moisture content of malt;

VD = volume of digest (mL), i.e., 20.5;

VE = volume of extract (mL), i.e., 0.5; and

WM = weight of malt extracted (g), i.e., $\simeq 0.5$.

Calculate the average of the four DPs.

See Appendix 5 for actual results from malting trials done on grain from the 1992/93 season (Tables S1m to S18m and P2m).

Determination of α and β amylase in malt

Rationale. Diastatic power may be defined as the joint ability of α- and β-amylases to break down starch (Novellie 1985). In brewing the α-amylase breaks down the starch chiefly into large fragments and is responsible for the thinning of the porridge; the β-amylase breaks down these large fragments into sugar and is mainly responsible for the saccharification of the mash (Brettler 1973). Sorghum grain, before germination, contains only traces of α- and β-amylases (Dyer and Novellie 1966). In barley malt β-amylase is the major amylase, but in sorghum the ratio of α- to β-amylase varies from 2:1 to 3:1 (Dyer and Novellie 1966). It is necessary to determine the activity of both the amylases in the malt because, although their combined activity results in the diastatic power of the malt, their activities—when determined separately and then added together—surpass the diastatic power.

Principle. This method works on the same principle as that for diastatic activity determination. However, the method includes the suppression of α-amylase on the one hand and the suppression of β-amylase on the other. β-amylase is inactivated in the presence of calcium ions added in the form of calcium acetate, whilst α-amylase is inactivated by treatment with ammonium oxalate, which binds with calcium ions that are essential to maintain the active structure of the enzyme (Taylor and von Benecke 1990).

Equipment. Use all the equipment given for malting behavior and the diastatic determination of malts, plus:

- 2 more 15-mL centrifuge tubes;
- 6 more 25-mL volumetric flasks; and
- 6 more 50-mL Erlenmeyer flasks.

Reagents. Use all the reagents given for malting behavior and the diastatic determination of malts, plus:

- Calcium acetate AR;
- Ammonium oxalate AR.

Procedure. Malt the grain in the same way as described for malting behavior and the diastatic determination of malts. The diastatic activity determination also follows the same method with the following few small changes:

a) Label the centrifuge tubes Aα, Aβ, Bα, and Bβ, and weigh 0.5 g of malt A into the two A tubes and 0.5 g of malt B into the two B tubes.

b) In the two α tubes add 0.316 g of calcium acetate, and in the β tubes add 0.284 g ammonium oxalate (Heinrich's Chibuku Breweries Ltd 1968). Add 10 mL of peptone solution to each tube and extract as before.

c) After centrifuging the samples, follow the same procedures for digestion and titration as in the previous method, but label the volumetric and Erlenmeyer flasks as follows: $A\alpha_1$, $A\alpha_2$, $A\alpha_{Bl}$, $A\beta_1$, $A\beta_2$, $A\beta_{Bl}$, $B\alpha_1$, $B\alpha_2$, $B\alpha_{Bl}$, $B\beta_1$, $B\beta_2$, and $B\beta_{Bl}$.

Calculation. This is as given for diastatic power calculation in the diastatic determination of malts. Calculate the means from the four α determinations to obtain the α-amylase activity; and for the four β determinations, to obtain the β-amylase activity (in diastatic units). The ratio of α- to β-amylase activity can also be determined.

Product Preparation and Testing

Products from the processing of whole sorghum or pearl millet grain can be classified as either primary or secondary. For instance, flour/meal and dehulled grain are primary products, and the products made from these primary products are secondary products. A number of different secondary products are made and tested in a grain-quality laboratory, since it is the final end-product that is the true test of the quality of the grain.

Product Preparation

This subsection describes the procedures for: preparation of flour/meal; preparation of composite flour for baked bread, steamed bread, and cookies, and the preparation of stiff porridge.

Preparation of flour/meal

The method of conditioning and roller milling the grain has been found to be the best way to produce good quality flour (Gomez 1993). Sorghum and pearl millet grain is treated in the same manner.

Equipment.

Item	*Size/ model*	*Quantity*	*Specification/ source*
Roller mill	500 kg h^{-1}	1	2 roll, with 1.5-mm screen
Cold store	Laboratory	1	4°C
Oven	Laboratory	1	Drying
Sieve shaker	Ro-Tap	1	
Balance	6 000 x 0.1 g	1	Toploader
Electronic moisture	Model 400G	1	Steinlite, Fred Stein tester Laboratories
Conversion chart	For sorghum	1	Steinlite
Beakers	500 mL	3	Plastic
Tray	620 x 620 mm	1	Stainless steel
Test sieves	150, 212, 300, 425, 500 μm	1 ea.	
Test sieve receiver	200 mm	1	
Feeler gauge		1	
Plastic bag	410 x 615 mm	1	
Rubber band		1	

Procedure. Weigh 5 000 g of grain into the plastic bag.

Determine the moisture content (MC) of the grain sample using the Steinlite electronic moisture tester.

The grain must now be tempered to 16% MC by adding water (e.g., if the initial MC was 11% then 5% more moisture must be added, i.e., 250 g water). After the water is added, mix the grain thoroughly, close the bag with the rubber band, and place it in the cold store for 24 h. Mix the grain once or twice during this tempering period.

After tempering, check the MC again before milling. If it is 16%, then continue; if not, add more water and condition the grain for a few more hours.

Using the feeler gauge, set the roll gaps on the roller mill: 0.15 mm for the top roll and 0.10 mm for the bottom roll.

Mill the conditioned grain.

Spread the meal out on the tray and place it in the oven at 50°C overnight to dry.

Cool the meal to room temperature before sieving. Arrange the test sieves in a stack on the sieve shaker and half-fill the top sieve with meal. Set the shaker to shake for 20 min.

After shaking, collect the different fractions of the meal from the sieves and repeat the shaking until all the meal has been fractionated.

The throughs from the 212-μm sieve can be used as baking flour.

Shake a sample of white commercial maize meal on the sieve stack and weigh the different fractions in order to compile a particle-size profile of the maize meal.

To make porridge meal, reconstitute the sorghum/millet meal from the different size fractions collected to produce a meal with the same particle-size profile as white commercial maize meal.

Preparation of composite flour baked bread

Ingredients for this bread include only the basic requirements for bread-making, with no additives. The flour used is a 20:80% composite of sorghum/pearl millet flour with commercial wheat flour. This composite was found to give a good loaf volume (compared with a 100% wheat control loaf). Since sorghum and pearl millet do not have gluten, the composite flour is not strong enough to support a loaf with a greater proportion than 20% of sorghum/pearl millet flour; above this percentage the loaf volume decreases significantly. It is normal to make a loaf with 100% wheat flour as a control when composite flour bread is being tested. The procedure described makes two 500-g loaves.

Equipment.

Item	*Size/ model*	*Quantity*	*Specification/ source*
Dough mixer	Model A-200T	1	Bench-type, Hobart
Proofing cabinet	Small	1	
Oven	Domestic	1	

Item	*Size/ model*	*Quantity*	*Specification/ source*
Balance	1 000 x 0.1 g	1	Toploader
Timer		1	Minutes
Pastry board		1	
Rolling pin		1	
Measuring cylinder	500 mL	1	
Cup		1	
Bowl		1	
Baking pans	93 x 134 x 85 mm	2	
Cloth		1	
Teaspoon		1	
Dessert spoon		1	

Ingredients. Sorghum or pearl millet flour (≤212 μm)

- Wheat flour (commercial)
- Fresh yeast
- White sugar
- Salt
- Margarine
- Water

Procedure. Weigh 24 g of yeast and 13.6 g of sugar into the cup. Add 60 mL water, mix, and leave in a warm place for 10 min.

Weigh 544 g wheat flour, 136 g sorghum/millet flour, 13.2 g salt and 11.8 g margarine into the bowl; then transfer these ingredients together with the yeast mixture and 340 mL water into the bowl of the mixer.

Set the mixer to run for 3 min on speed 1.

Remove the dough from the mixer, knead it on a lightly-floured board for 1 min, then roll it into a ball.

Smear the inside of the bowl with margarine and place the dough in the bowl; cover it with a damp cloth and place it in the proofing cabinet set at 34°C.

Proof for 75 min, then punch down the dough and knead it for 1 min.

Return the dough to the proofing cabinet for 30 min.

Punch down again and divide the dough into two (564 g each piece), then, using the rolling pin, roll each piece out 3 times.

Smear the insides of the baking pans with margarine.

Fold up the dough and seal the open ends, then press each piece of dough into a baking pan, pressing down around the edges and then in the middle 3 times to obtain a smooth, even loaf.

Leave it to rise in the proofing cabinet for 40 min.

Bake in a preheated oven at 210°C for 25 min.

Preparation of composite flour steamed bread

The procedure for making this bread is simpler than that for baked bread, and no oven is required. The flour used here is a 30:70% composite of sorghum/pearl millet flour with commercial wheat flour. The small size of the loaf and the use of steam in cooking contribute to a satisfactory bread texture being obtained with this 30% proportion of sorghum/millet flour. As before, a 100% wheat flour control loaf is normally made alongside the composite flour bread for comparison. The procedure described makes two 76-g loaves.

Equipment.

Item	*Size/ model*	*Quantity*	*Specification/ source*
Proofing cabinet	Small	1	
Hotplate		1	
Balance	100 x 0.1 g	1	Toploader
Timer		1	Minutes
Cooking pot	Large	1	
Trivet	To fit pot	1	
Pastry board		1	
Rolling pin		1	
Measuring cylinder	100 mL	1	
Cup		1	
Bowl		1	
Round pie pans, bottom diam. 66 mm, top diam. 81 mm, height 30 mm		2	
Cloth		1	
Wooden spoon		1	
Teaspoon		1	
Dessert spoon		1	

Ingredients. Sorghum or pearl millet flour (≤212 μm)

- Wheat flour (commercial)
- Fresh yeast
- White sugar
- Salt
- Margarine
- Water

Procedure. Weigh 1.8 g of yeast and 3 g of sugar into the cup. Add 20 mL water, mix, and leave in a warm place for 10 min.

Weigh 70 g wheat flour, 30 g sorghum/millet flour, and 1 g salt into the bowl; add the yeast mixture and 40 mL water.

Using the wooden spoon, mix the ingredients for 1 min.

Remove the dough from the bowl, knead it on a lightly-floured board for 1 min, then roll it into a ball.

Smear the inside of the bowl with margarine and place the dough in the bowl; cover it with a damp cloth and place it in the proofing cabinet set at 34°C.

Proof for 150 min, then punch down the dough.

Divide the dough into two (80 g each piece) and roll out each piece twice, using the rolling pin.

Smear margarine around the insides of the pans.

Shape the dough into two smooth balls and place each into a pan.

Leave to rise in the proofing cabinet for 50 min.

Place the trivet into the pot and pour in enough water to just cover the trivet. Bring the water to the boil on the hotplate.

Place the pans onto the trivet above the boiling water and steam the loaves, with the pot lid on, for 25 min.

Preparation of composite flour cookies

Because cookies do not need to have a light texture, as in bread, a much higher proportion of sorghum/pearl millet can be used in their formulation. Here a 50:50 ratio of sorghum/pearl millet flour to commercial wheat flour is used. Cookies made with 100% wheat flour are also normally made as controls when composite flour cookies are being tested. The procedure described makes 35-40 cookies.

Equipment.

Item	*Size/ model*	*Quantity*	*Specification/ source*
Mixer	Mini	1	With bowl and beaters, Kenwood
Oven	Domestic	1	
Refrigerator	Domestic	1	
Balance	1 000 x 0.1 g	1	Toploader
Timer		1	Minutes
Pastry board		1	
Rolling pin		1	
Round cookie cutter	40 mm diam.	1	
Ruler	150 mm	1	
Measuring spoon	2.5 mL	1	
Bowl		1	
Baking trays	305 x 240 mm	2	
Wooden spoon		1	
Dessert spoon		1	

Ingredients. Sorghum or pearl millet flour (≤212 μm)

- Baking powder
- Wheat flour (commercial)

- White sugar
- Salt
- Margarine
- Egg
- Vanilla essence (optional)

Procedure. Weigh 155.9 g sugar and 113.4 g margarine into the mixer bowl.

Using the mixer, beat the margarine and sugar together until the mixture is smooth and creamy.

Weigh 99.2 g wheat flour and 99.2 g sorghum/millet flour into the other bowl, add 2.5 mL salt and 2.5 mL baking powder, and mix.

Break an egg into the creamed mixture and add a spoonful of the flour mixture, then beat well.

Stir the rest of the flour mixture and the vanilla essence into the creamed mixture using the wooden spoon, and mix well.

Place the dough in the refrigerator and leave it there overnight.

Form the dough into a ball and then roll it out, using the rolling pin, to a thickness of 6 mm on a floured board.

Using the cookie cutter, cut out the dough and place the rounds on a baking tray smeared with margarine.

Bake in the preheated oven at 200°C for 10 min until the cookies are lightly-browned. Several batches will need to be baked to use up all the cookie dough.

Preparation of stiff porridge

Porridges of varying consistencies are eaten in Zimbabwe, depending on the taste of the consumer, but the most common is the stiff porridge called *sadza*. A solids:water ratio of 1:5 is used in its preparation. When a sorghum/pearl millet porridge meal is being tested, a porridge made from the popular white commercial maize meal is normally made at the same time, as a control. The procedure described makes enough porridge for 10–12 people to taste.

Equipment.

Item	*Size/ model*	*Quantity*	*Specification/ Source*
Hotplate		1	
Balance	1 500 x 1 g	1	Toploader
Timer		1	Minutes
Beaker	1 000 mL	1	Plastic
Cooking pot	Large	1	
Bowl		1	
Wooden spoon		1	

Ingredients.

- Sorghum or pearl millet porridge meal (reconstituted)
- Water

Procedure. Weigh 180 g of meal into the bowl and 900 g of water into the beaker.

Pour half of the water into the pot and bring it to the boil on the hotplate.

Pour the other half of the water into the meal in the bowl and mix them to make a slurry.

Pour the slurry into the boiling water in the pot and stir continuously.

When the mixture comes to the boil, start the timer to time the cooking process, and turn the heat down so that the mixture boils gently. Sorghum porridge takes 15 min to cook, but pearl millet porridge and maize meal both take 20 min.

The porridge must be stirred continuously when being cooked to avoid burning the bottom of the porridge or the formation of lumps.

Product Testing

For testing primary products, only one test—for flour/meal—is described here, i.e., the gelatinization temperature test. All of the chemical analyses described in the previous section can be carried out on this product, and Agtron reflectance readings (as described in the GQE section) can also be taken.

For the secondary products a consumer taste panel is normally used to evaluate the end-products, as well as these following physical tests:

- Bread testing: specific loaf volume; texture; crumb color.
- Cookie testing: spread ratio.
- Porridge testing: consistency; viscosity; texture; color.

Gelatinization temperature

Rationale. Gelatinization temperature of flour/meal may vary in different varieties of sorghum or pearl millet. Gelatinization temperature determines cooking properties of grains and is a useful test for the selection of varieties for extrusion, for use as adjunct in beer, etc.

Principle. Although the gelatinization temperature of the flour/meal is presented here, the principle described is actually focused on the gelatinization of the starch in the flour, because it is a change in the structure of the starch granules that indicates gelatinization. Starch granules, when they are not gelatinized, have a uniform shape and size (sorghum and pearl millet starch granules are fairly spherical), and exhibit a property termed birefringence, i.e., under polarized transmitted light the granules appear to have a cross on them. The birefringence can be better visualized by use of a UV filter. The "cross" is caused by the intercrossing of green and red colors in a vertical and horizontal fashion. When a starch granule is heated in water, the weaker hydrogen bonds in the amorphous areas are ruptured, and the granule swells with progressive hydration. The more tightly-bound micelles remain intact, holding the granule together, but birefringence is lost and the granule appears gray and amorphous. The temperature at which the birefringent cross disappears is the gelatinization temperature (Downing 1984).

Equipment.

Item	*Size/ model*	*Quantity*	*Specification/ source*
Cyclone sample mill	Model MS 3010-017	1	With 0.4-mm screen, Udy Corp.
Balance	750 x 0.01 g	1	Toploader
Water-bath	Small	1	50–80°C
Microscope	With L32/0.40 lens	1	Polarizing, with UV filter
Vortex mixer	Small	1	
Timer		1	Seconds and minutes
Test tube holder	For 15-mL tubes	1	
Test tubes	15 mL	10	Graduated
Beakers	150 mL	2	Glass
Dropping pipette		1	
Microscope slides	22 x 22 mm	10	With cover-slips
Squeeze bottle	500 mL	1	Containing distilled water
Weighing papers	50 mm	10	
Spatula	Small	1	
Graph paper		1 sheet	

Procedure. Mill about 10 g of grain.

Fill each of the test tubes up to the 10-mL mark with distilled water.

Heat the water-bath to 55°C, and place a beaker, half-filled with water, in the bath.

Place two of the test tubes into the beaker in the water-bath to equilibrate to 55°C.

Weigh out two samples of 0.1 g of the meal, and add one to each test tube.

Vortex each tube for 30 sec.

Put the two tubes back into the beaker in the water-bath, and leave them there for 10 min at 55°C.

After removing the test tubes from the water-bath, vortex them immediately, then place them in a beaker of ice-cold water for 5 min.

Vortex each tube again after cooling and, immediately after vortexing, drop three drops of the suspensions from the tubes onto microscope slides and cover them with cover-slips.

Under the microscope, view five fields on each slide and, on each field, count the total number of starch granules that appear in the grid as well as the number of birefringent granules.

Repeat this procedure with the next pair of tubes at 60°C; the third pair at 65°C; the fourth at 70°C; and the last two test tubes at 75°C.

Calculations. Calculate the percent birefringence using the following equation:

$$\% \text{ birefringence} = \frac{\text{no. of birefringents}}{\text{total granules}} \times 100$$

Calculate the average percent birefringence for each temperature:

$$\text{av. } \% \text{ birefringence} = \frac{\text{sum of } \% \text{ birefringence on both slides}}{10}$$

Draw a graph with temperature (from 55 to 75°C) on the x axis and average percent birefringence (from 0 to 100) on the y axis. If the above calculations give an average percent birefringence of 0 for one or two of the temperatures, do not plot these points, but plot all the other points and then determine the exact temperature at which percent birefringence is 0 by extrapolating the graph line to the point where it crosses the x axis. The temperature at this point is the gelatinization temperature.

Consumer taste panel sensory evaluation

Rationale. When different grain varieties are being tested for use in composite flour products or as porridge, a taste panel can indicate the consumer acceptability of the product.

Principle. A taste panel evaluation is normally conducted in a special room provided with booths for each panellist to sit in. The panel must comprise at least 10 people so that results may be analyzed statistically. Panellists are given a ballot form (Fig. 6) on which to indicate their rating of the samples provided. Ratings range on a 5-point scale from Very Good to Very Bad, and cover the following parameters, Color, Smell, Texture, Flavor, and General Acceptability. The system of filling in the ballot form is explained to the panelists before they are given the samples to evaluate. Two or three test samples, together with a control sample, can be evaluated together in one sitting. (Note that a second taste panel, using the same samples, should always be run to confirm the results of the first panel.) As an example, the procedure for conducting a 10-man taste panel to evaluate porridge made from three different sorghum varieties (A, B, and C) is given below.

Equipment.

Item	*Size/ model*	*Quantity*	*Specification/ source*
All equipment given for the preparation of stiff porridge, plus:			
Water-bath	Circulating	1	
Beakers	1 000 mL	4	Glass
Petri dishes		40	
Teaspoons		40	
Cups		10	

Item	*Size/ model*	*Quantity*	*Specification/ source*
Labeling tape		1 roll	
Ballot forms (Fig. 6)		10	
Pencils		10	

Ballot form number 1

Name:.....

Date:.....

Please taste each sample in order from left to right as shown on the ballot. Indicate your rating of the sample by placing a check mark (x) at the appropriate point on the scale.

Sample Code	927					165					331					275				
	Col	Sml	Txt	Flv	Gen	Col	Sml	Txt	Flv	Gen	Col	Sml	Txt	Flv	Gen	Col	Sml	Txt	Flv	Gen
Very Good																				
Good																				
Fair																				
Bad																				
Very Bad																				

KEY: Col = Colour Sml = Smell Txt = Texture Flv = Flavour Gen = General Acceptability

Comments: .....

.....

Figure 6—Ballot form for the evaluation of products by a consumer taste panel.

Procedure. Prepare the three sample porridges, and a white maize meal control porridge, by following the procedure for preparation of stiff porridge.

Transfer the cooked porridges into the beakers and place these in the water-bath set at 50°C.

Close the lid of the water-bath and leave the porridges to equilibrate for 15 min. (Note that it is important all the samples are served at the same temperature.)

Number the ballot forms 1 to 10.

Prepare a table that allocates a random code number to each sample for each panelist, and randomize the order of presentation of the samples in the table, also (e.g., Table 3).

Insert the code numbers for the samples on the ballot forms and label the petri dishes with the corresponding numbers.

Place a pencil, a ballot form, four teaspoons and a glass of water into each panelist's booth.

Serve up a small sample of each porridge in a petri dish to each panelist, ensuring that the labels on the petri dishes correspond to the samples

served, as laid out in the table prepared. (Note that it is important to serve up the same quantity of each sample to the panelist in identical serving dishes. Water is provided for the panelist to rinse his/her mouth between samples.)

Table 3—Allocation of random numbers to samples, and random serving order for a consumer taste panel.

Ballot number	Serving order				
1	Sample	A	B	C	Control
	Code	927	165	331	275
2	Sample	B	C	Control	A
	Code	612	838	197	324
3	Sample	C	Control	A	B
	Code	194	758	098	406
4	Sample	Control	A	B	C
	Code	535	485	915	563
5	Sample	Control	C	B	A
	Code	685	414	119	789
6	Sample	C	B	A	Control
	Code	390	580	568	363
7	Sample	B	A	Control	C
	Code	519	682	732	025
8	Sample	A	Control	C	B
	Code	284	849	616	250
9	Sample	B	Control	A	C
	Code	207	723	798	413
10	Sample	C	A	Control	B
	Code	245	485	270	197

When the panelists have finished their evaluation, collect the ballot forms for analysis of the results.

Calculations. For statistical analysis, give each rating a score on the following scale:

- Very Bad = 1
- Bad = 2
- Fair = 3
- Good = 4
- Very Good = 5

Then tabulate the ratings given to the different samples, and calculate means (e.g., Table 4).

Perform an analysis of variance on these means, in order to discover whether the differences between the mean sample scores are significant ($P \leq 0.05$).

Table 4—Form for tabulation of scores for sensory ratings from consumer taste panel ballot forms.

Ballot form number	Samples																			
	A					B					C					Control				
	Col	Sml	Txt	Flv	Gen	Col	Sml	Txt	Flv	Gen	Col	Sml	Txt	Flv	Gen	Col	Sml	Txt	Flv	Gen
1																				
2																				
3																				
4																				
5																				
6																				
7																				
8																				
9																				
10																				
Totals																				
Means																				

Bread testing Tests that are carried out on bread made in the test kitchen 1.5–2.5 h after cooking comprise: specific loaf volume determination; texture measurements; and crumb color determination.

Specific loaf volume—

Rationale. The specific loaf volume of any loaf is a reference value that gives an indication of the extent to which a loaf has risen, and thus permits volume comparisons to be made between different loaves. The method described is for the baked loaves of 500 g.

Principle. A loaf volumeter is used to measure loaf volume. This is an instrument calibrated using a "dummy" loaf of fixed volume, working on a principle of displacement of rape seed.

Equipment.

Item	*Size/ model*	*Quantity*	*Specification/ source*
Loaf volumeter	Standard loaf	1	With "dummy" loaf, National Mfg Co.
Rape seed	Enough to fill volumeter		
Balance	750 x 0.1 g	1	Toploader

Procedure (Fig. 7). With the container open and the reservoir swung to down position, place the "dummy" loaf in the container.

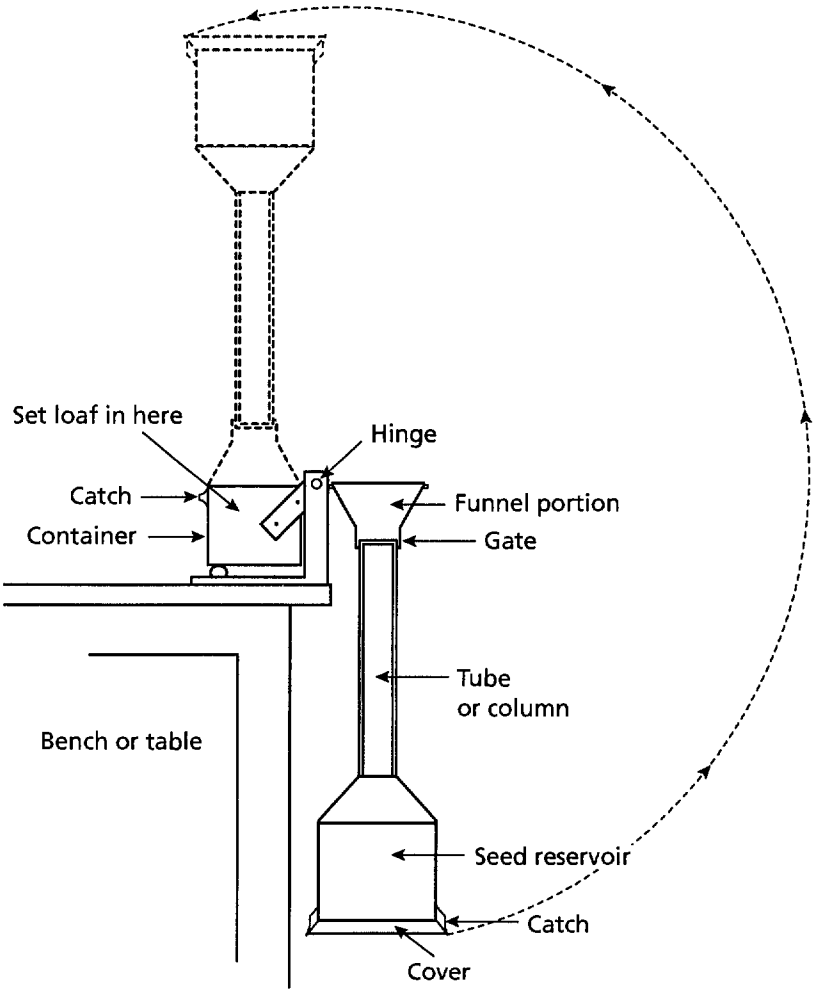

Figure 7—Diagram showing the use of the National loaf volumeter (National Manufacturing Co.).

Swing the reservoir to the up position and lock the funnel portion to the container with the catch.

With the gate closed, remove the reservoir cover and pour in rape seed, filling the column and half-filling the reservoir.

Open the gate and allow the rape seed to pour into the container.

When the seed has settled, close the gate and swing the reservoir to the down position, pouring out the excess seed in the column, then swing the reservoir up again.

Replace the reservoir cover and open the gate. Swing the reservoir down once more, draining the rape seed into the reservoir.

Unlatch the catch and open the container and remove the "dummy" loaf. The volumeter is now calibrated.

Place the sample loaf into the container, close it up and, with the gate closed, swing the reservoir to the up position.

Open the gate and allow the rape seed to pour into the container and settle.

The volume of the loaf will now be indicated by the level of the rape seed in the column: take note of this reading.

Swing the reservoir to the down position once again, allowing the rape seed to pour into the reservoir.

Open the container and remove the sample. Place a duplicate sample in the container and obtain a volume reading for the second one in the same way as the first.

Then weigh both loaves.

Calculation. For each loaf, insert the loaf volume and weight into the equation below, and then find the average of the two results.

$$\text{Specific loaf volume} = \frac{\text{loaf volume}}{\text{loaf weight}}$$

Texture—

Rationale. The use of an electronic texture analyzer makes it possible to compare the texture of different products and obtain an indication of the binding characteristics of the product's ingredients. Both baked and steamed breads can be analyzed for texture.

Principle. The Stevens Texture Analyser measures the force that a sample exerts upwards on a descending probe which penetrates the sample at a fixed and constant speed up to a fixed distance (Stevens Advanced Weighing Systems 1979). This force is shown on the display panel in grams. Thus, the lower the display reading the lighter the texture of the sample.

Equipment.

Item	*Size/ model*	*Quantity*	*Specification/ source*
Bread knife		1	
Ruler	150 mm	1	
Texture Analyser	LFRA 1 000 g	1	With flat probe, Stevens-Mechtric

Procedure. Turn the instrument on and leave it for 30 min so that the electronic equipment may stabilize.

Cut a 24-mm wide slice from the centre of the sample loaf.

Place the slice on the sample table of the texture analyzer.

Set the instrument for a penetration speed of 2 mm sec^{-1} and a penetration distance of 6 mm (i.e., 25% of the slice thickness—measurements based on the AACC method for the universal testing machine: Baker and Ponte 1987).

Zero the instrument by pressing the "Reset" button and adjusting the display reading to 0.0 by using the "Zero" knob.

With the instrument in "Normal" mode, press the "Start" button. The probe will descend and then rise.

Whilst the probe is still rising, record the reading on the display.

Move the slice of bread slightly so that the probe will penetrate a different area, then press the "Start" button again.

Repeat the above step once more.

Cut another slice of bread from the second loaf in the batch and take three readings on that slice.

Then calculate the average of the six readings.

Crumb color—

Rationale. Once a control loaf (100% wheat—steamed or baked) has been made and its crumb color determined, the crumb color for a wheat/sorghum or wheat/pearl millet composite loaf can be compared with this reference value to see how close it is to the control.

Principle. Bread crumbs of a fairly even and uniform size are given a color value using the Agtron process analyzer (see the procedure for using this equipment under sorghum GQE on p. 11).

Equipment.

Item	*Size/ model*	*Quantity*	*Specification/ source*
Balance	750 x 0.1 g	1	Toploader
Process analyzer	M-45	1	Agtron
Reference reflectance disks	0, 63, 90	3	Agtron
Sample cups	Small	2	Agtron
Bread knife		1	
Sieve	Pore size ≃1.69 mm	1	
Bowl	To fit under sieve	1	
Weighing boats	Large	2	

Procedure. Warm up the Agtron meter and calibrate it (see Agtron readings procedure on p. 15).

Take a sample of bread from the interior of the loaf and rub gently over the sieve.

Weigh out two 15-g samples of crumbs.

Transfer the samples into the Agtron sample cups and tap them to obtain an even layer of crumbs spread across their bottoms. Place the cups one by one on the Agtron's viewing aperture, taking note of the reading on the display when it stabilizes.

Calculate the average of the two readings.

Cookie testing

The only test done on cookies is measurement of the spread ratio.

Rationale. Spread-ratio values give an indication of the binding properties of the flour, and the texture of the cookies, by indicating the extent to which the mixture spreads.

Equipment.

Item	*Size/ model*	*Quantity*	*Specification/ source*
Ruler	500 mm	1	

Procedure. After baking and cooling a batch of cookies, select 18 well-formed cookies on which to take measurements, and divide them into three groups of six.

Make three rows of six cookies placed edge to edge, and measure the length of each row (mm).

Now make three stacks of six cookies and measure their heights (mm).

Calculations. Divide each row length by 6, to obtain the cookie diameter, and find the average of the three.

Divide each stack height by 6, to obtain the cookie height, and find the average of the three.

Using these average measurements, calculate the spread ratio thus:

$$\text{Spread ratio} = \frac{\text{diameter}}{\text{height}}$$

Porridge testing

In this section are some of the procedures that can be carried out in testing porridges: consistometry; viscometry; texture measurement; and color determination.

Consistometry—

Rationale. Determination of consistency of viscous products using the Bostwick consistometer can be carried out on both raw and cooked products. This equipment permits producers of such viscous products as jellies, preserves, sauces, etc., to predetermine formulae for their product and to standardize production lots (CSC Scientific Co. 1990).

Principle. A consistometer is an instrument used to determine the consistency of viscous materials by measuring the distance that the material flows under its own weight in a given time interval.

The consistometer is made of stain-resistant metal. It consists of a trough divided into two sections by a gate. The smaller section serves as a reservoir for the material to be tested. The larger section is graduated along the bottom in 0.5-cm divisions beginning at the gate. The gate is spring-operated and is held by a trigger that permits instantaneous release. In operation, the gate slides vertically in the grooves of two posts extending upward from the sides of the trough. The L–shaped trigger release hooks over the top of the gate to hold it in a closed position (CSC Scientific Co. 1990).

Equipment.

Item	*Size/ model*	*Quantity*	*Specification/ source*
Consistometer	No. 24925-000	1	Bostwick, CSC Scientific
Water-bath	Laboratory	1	25°C

Item	*Size/ model*	*Quantity*	*Specification/ source*
Hotplate	Laboratory	1	
Balance	750 x 0.1 g	1	Toploader
Timer		1	Seconds and minutes
Beakers	600 mL	3	Pyrex
Watch-glasses	To fit on beakers	2	
Stirring rod		1	
Spatula		1	

Procedure. This can be divided into two sections:

PROCEDURE 1: RAW PRODUCTS

The ratio of the solids to water depends on the product (its normal reconstitution ratios).

A ratio of about 1:2 w/w is normally used for raw samples, e.g.,:

Weigh 105 g of sample meal into a beaker and add 210 g of distilled water.

Stir the mixture well, cover with a watch-glass and then place the beaker in the water-bath at 25°C for 70 min to equilibrate the mixture so that it has a uniform temperature throughout.

The consistometer must be placed on a level surface and the leveling screws adjusted until the bubble in the circular level is centered.

After equilibration, ensure that the consistometer gate is closed and the trigger release hooked over the top before filling the reservoir with sample. (The sample should always be tested as quickly as possible after being removed from the water-bath to prevent any consistency changes caused by temperature change or exposure to air.)

Allow 30 sec for the sample to settle in the reservoir, then level off the top with the spatula.

Press down on the trigger to open the consistometer gate and, at the same time, start the timer.

After exactly 1 min, determine how far the material has flowed along the trough, taking a maximum reading at the centre of the trough, and a minimum reading at the edge of the trough, then averaging the values (CSC Scientific Co. 1990).

Repeat the process with a second repetition of the same sample and calculate an average for the sample.

This value (expressed in cm) is then compared against a previously determined standard.

PROCEDURE 2: COOKED PRODUCTS

A 1:8 ratio of meal to water is used to make the porridge. (A ratio lower than this would result in the porridge being too stiff, such that it would not flow.)

Weigh 25 g of sample meal into a beaker and add 200 g of distilled water.

Place the beaker on the hotplate and bring the contents to the boil, stirring continuously.

Cook the porridge, stirring continuously, for 15 min.

Remove the cooked sample from the hotplate and stir for 30 sec, then place it in the water-bath at 25°C to cool for 10 min.

When it is cool, place the sample on the balance and add water to make the mass up to 225 g, i.e., replacing the water lost through evaporation.

Stir the sample, cover with a watch-glass and then return it to the water-bath for 60 min.

Determine the consistency using the consistometer in the same way in which it was used for the raw samples.

Run a second repetition of the same sample, following the same procedure, and average the two results.

Compare the consistency (measured in cm) of the sample with that of a standard, e.g., maize meal.

Alternative procedure. To supplement consistency measurements using the Bostwick consistometer, a line-spread consistometer may also be used. This consists of a base of calibrated concentric circles of increasing radius (at 1-cm increments) drawn on a sheet of white paper, on top of which is a sheet of glass.

Place a sample cylinder on the innermost circle.

Prepare the sample in the same way as indicated above, and then pour it into the sample cylinder and leave it to rest for 30 sec.

Then carefully lift the cylinder up vertically in a smooth continuous movement and allow the sample to spread on the consistometer.

After 1 min measure the radius of the spread sample at several points, and determine the mean spread.

Again run a second repetition and obtain an average consistency measurement (also measured in cm).

Compare the consistency of the sample with a previously-determined standard.

Viscometry—

Rationale. Viscosity is the measure of the internal friction of a fluid. This friction becomes apparent when a layer of fluid is made to move in relation to another layer. Highly viscous fluids require more force to move than less viscous materials (Brookfield 1989). The viscometer has been found to be useful when dealing with stiff porridges because these porridges do not flow; thus measurement of consistency is not possible.

Principle. The Brookfield viscometer, model RVT (Fig. 8), rotates a sensing element in a fluid and measures the torque necessary to overcome the viscous resistance to the induced movement. This is accomplished by driving the immersed element, termed the spindle, through a beryllium copper spring. The degree to which the spring is wound, indicated by the red pointer, is proportional to the viscosity of the fluid (Brookfield 1986).

The viscosity can be measured over a number of ranges since, for a given spring deflection, the actual viscosity is proportional to the spindle speed and is related to the spindle's size and shape. For a material of given viscosity, the resistance will be greater as the spindle size and/or rotational speed increases. The minimum viscosity range is obtained by using the largest spindle at the highest speed, and the maximum range by using the smallest spindle at the lowest speed (Brookfield 1986).

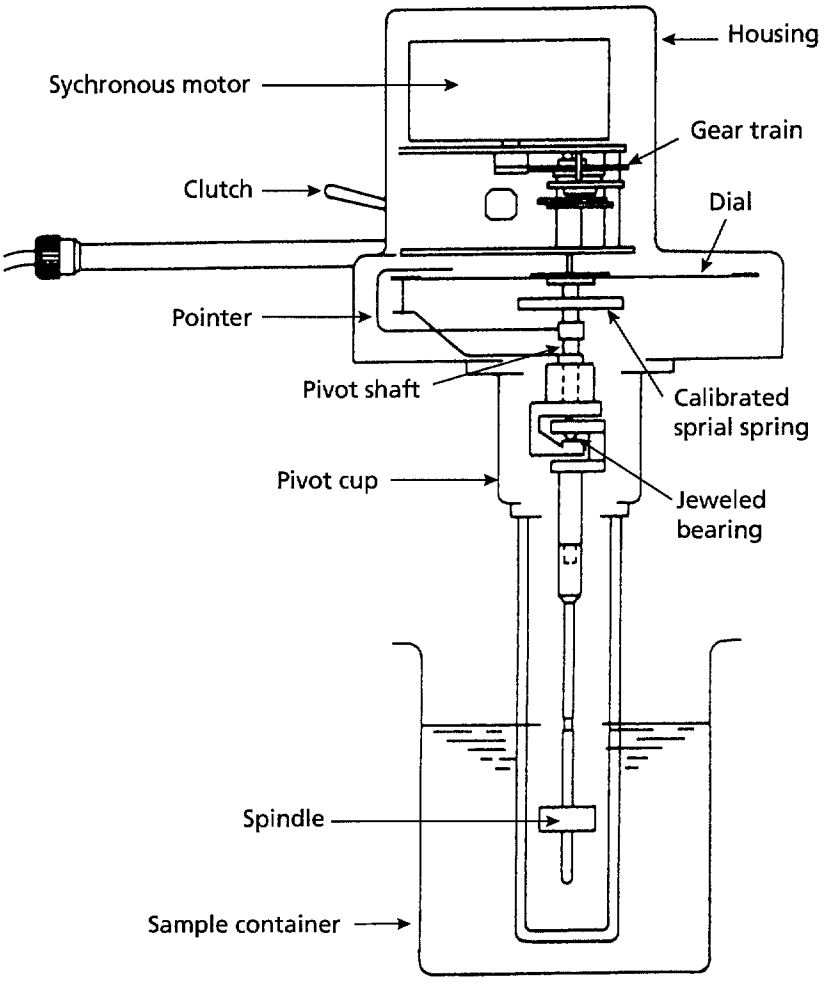

Figure 8—Schematic view of the major components of a basic dial-reading viscometer (Brookfield 1989).

Equipment.

Item	*Size/ model*	*Quantity*	*Specification/ source*
Viscometer	Model RVT	1	With guard leg*, Brookfield

Item	*Size/ model*	*Quantity*	*Specification/ source*
Spindle	#6	1	Brookfield
Viscosity standards	4 850, 11 100, 53 565 cps		Brookfield
Brookfield Factor Finder		1	
Balance	750 x 0.1 g	1	Toploader
Water-bath	Laboratory	1	25°C
Timer		1	Seconds and minutes
Hotplate	Laboratory	1	
Beakers	600 mL	2	Griffin*
Stirring rod		1	
Watch-glasses	To fit on beakers	2	

*Only a 600-mL low-form Griffin beaker should be used in conjunction with this viscometer with its guard leg attached because this is the configuration used when the instrument was initially calibrated. Use of a larger container will increase the ranges measured by the spindles. It is preferable to use the viscometer with its guard leg attached because it protects the spindle from damage. If the spindle is bumped the shaft alignment could be damaged.

Procedure (Brookfield 1986 and 1989). Switch on the instrument's power switch.

Check the bubble in the circular level to make sure that the instrument is leveled. If not, adjust the leveling screws on the feet of the instrument to the level position.

The calibration of the viscometer can be checked first, and the correct spindle number and speed chosen for the test by making use of a viscosity standard of similar thickness to the sample to be tested. In choosing the correct spindle/speed combination, the following may be noted: for any given spindle/speed combination the maximum range available is equal to the Spindle Factor multiplied by 100. The minimum recommended range is equal to the Spindle Factor multiplied by 10 (i.e., for maximum accuracy do not take a reading lower than 10). The Spindle Factor is appropriate to the viscometer model/spindle/speed combination and can be found on the Brookfield Factor Finder. (Note that the #1 RVT spindle should not be operated at 100 rev min^{-1} because a condition of turbulent flow is produced that can cause inaccurate measurements.)

Any standard used should be equilibrated to 25°C in the water-bath before use.

When testing a stiff porridge, a meal:water ratio of 1:6 (w/w) can be used (1:5 is too stiff).

The three standards, 4 850, 11 100, and 53 565 cps, have viscosities that cover a wide range of porridges made with this meal:water ratio, and

gave the correct viscometer reading when checked using the spindle #6 at 20 rev min^{-1}.

Before attaching the spindle to the lower shaft, examine it for corrosion or damage that could lead to false viscosity results.

Always lift up the spindle coupling when attaching a spindle to avoid damaging the instrument's pivot point and jewel bearing. Screw the spindle firmly to the coupling (noting the left-hand thread).

Weigh 60 g of sample into a beaker and add 360 g of distilled water.

Place the sample on the hotplate and bring to the boil, stirring continuously.

Cook, with continuous stirring, for 15 min.

Remove the cooked sample from the hotplate and stir it for 30 sec, then place it in the water-bath at 25°C to cool for 10 min.

When it is cool, place the sample on the balance and add water to make the mass up to 420 g, i.e., replacing the water lost through evaporation.

Stir the sample, cover it with a watch-glass, and then return it to the water-bath at 25°C for 60 min.

With the #6 spindle still in place and the instrument speed still set at 20 rev min^{-1}, insert and center the spindle in the sample until the sample level reaches the immersion groove in the spindle's shaft. (With a disk-type spindle it is sometimes necessary to tilt the instrument slightly while immersing, to avoid trapping air bubbles on the spindle's surface.) It may be necessary to level the sample around the spindle.

To make a viscosity measurement, turn on the motor switch to energize the viscometer drive motor. (If trouble is experienced in starting the instrument at a high-speed setting, turn it on at a lower speed and shift to the high speed while it is running.)

Allow 5 min running time for the reading on the dial to stabilize.

Since the measurement is being made at high speed, it is necessary to depress the clutch and turn off the motor, with the red pointer on the dial in view. The clutch raises the dial against the pointer and thus holds the pointer in place, so that a reading can be taken.

Remove the sample from under the viscometer, clean the guard leg and spindle, then repeat the whole procedure with a second repetition of the same sample meal.

Calculation. To calculate viscosity in centipoise (cps), adjust the slide of the Factor Finder until the viscometer model and spindle number being used appear in the window (i.e., model RVT and spindle #6). Multiply the dial reading by the Spindle Factor shown beside the speed (i.e., 20 rev min^{-1}) at which the measurement was made (i.e., 500):

i.e., viscosity = dial reading x Spindle Factor.

∴ In this case the Spindle Factor would be 500 and, if the dial reading was 38.8, then:

viscosity = 38.8 x 500 = 19 400 cps.

The viscosity of a standard porridge (e.g., maize meal porridge) can be determined for comparison of results.

Texture measurement—

Rationale. The electronic texture analyzer can be used in place of the viscometer to give a measure of a porridge's "thickness".

Principle. The Stevens texture analyzer is used again for this method (see bread texture measurement procedure).

Equipment.

Item	*Size/model*	*Quantity*	*Specification/ source*
Texture analyzer	LFRA 1 000 g	1	With spherical probe, Stevens-Mechtric
Balance	750 x 0.1 g	1	Toploader
Water-bath	Laboratory	1	25°C
Timer		1	Seconds and minutes
Hotplate	Laboratory	1	
Beakers	250 mL	2	L/F
Stirring rod		1	
Watch-glasses	To fit on beakers	2	

Procedure. Prepare the porridge for testing, using the cooking and equilibration procedure given for viscosity determination; but use only half the amount of meal and water stated there.

Turn on the texture analyzer 30 min before use.

After equilibration of the sample in the 25°C water-bath, smooth the top of the porridge in the beaker and place the beaker onto the sample table of the texture analyzer.

Set the penetration speed on the instrument at 0.2 mm sec^{-1}, and the penetration distance at 10 mm.

Take three texture readings on the sample following the bread texture procedure.

Take another three readings on the second repetition of the same sample's porridge.

Calculate an average texture reading (in grams) from the six readings.

The texture of a standard porridge (e.g., maize meal porridge) can be determined for comparison of results.

Color determination—

Rationale. Just as the color of bread affects its consumer acceptance, so the color of a porridge is important for acceptance by consumers.

Principle. A sample of porridge is given a color value using the Agtron process analyzer (see the Agtron readings procedure in the sorghum GQE section).

Equipment.

Item	*Size/ model*	*Quantity*	*Specification/ source*
Process analyzer	M-45	1	Agtron
Reference reflectance disks	0, 63, 90	3	Agtron
Sample cups	Small	2	Agtron
Water-bath	Laboratory	1	25°C
Hotplate	Laboratory	1	
Balance	750 x 0.1 g	1	Toploader
Timer		1	Seconds and minutes
Beakers	250 mL	3	Pyrex
Watch-glasses	To fit on beakers	2	
Stirring rod		1	

Procedure. Warm up the Agtron equipment and calibrate it in the green mode (see the Agtron readings procedure in the sorghum GQE section).

Prepare the porridge for testing using the cooking and equilibration procedure given for consistency determination; but use only half the amount of meal and water stated there.

After equilibration of the sample in the 25°C water-bath, pour enough sample into the sample cup to form a smooth layer about 8 mm deep on the bottom of the cup.

Place the sample cup over the instrument's viewing aperture and obtain a color reading.

Repeat the procedure with a duplicate sample.

Calculate the average of the two reflectance values to obtain a color value (in Agtron units).

Readings can be made on a standard porridge, e.g., maize meal porridge, for comparison.

AACC (American Association of Cereal Chemists). 1983. Crude protein - Kjeldahl method: boric acid modification. Method 46-12 *in* Approved methods of the American Association of Cereal Chemists (AACC), 8th edn. St Paul, Minnesota, USA: American Association of Cereal Chemists Inc.

Agtron Inc. 1989. Agtron Process Analyser M-45 owner's manual. Sparks, Nevada, USA: Agtron Inc.

AOAC (Association of Official Agricultural Chemists). 1965. Official methods of analysis. 10th edn. Washington DC, USA: Association of Official Agricultural Chemists.

AOAC (Association of Official Agricultural Chemists). 1980. Page 125, section 7.007 *in* Official methods of analysis. 13th edn. Arlington, Virginia, USA: Association of Official Analytical Chemists.

AOAC (Association of Official Agricultural Chemists). 1984. Page 249, section 14.006 *in* Official methods of analysis. 14th edn. Arlington, Virginia, USA: Association of Official Analytical Chemists.

Axtell, J.D., Kirleis, A.W., Hassen, M.M., Mason, N.D., Mertz, E.T., and Munck, L. 1981. Digestibility of sorghum proteins. Proceedings of the National Academy of Sciences, USA 78:1333–1335.

Baker, A.E., and Ponte, J.G. 1987. Measurement of bread firmness with the Universal Testing Machine. Cereal Foods World 32:491.

Brettler, P. 1973. Sorghum in the native brewery industry. Bulawayo, Zimbabwe: Municipal Brewery.

Brookfield. 1986. Brookfield dial reading viscometer, Brookfield digital viscometer, model DV-1, operating instructions. Manual no. M/85-150-C. Stoughton, Mass., USA: Brookfield Engineering Laboratories Inc.

Brookfield. 1989. More solutions to sticky problems: a guide to getting more from your Brookfield viscometer. Stoughton, Mass., USA: Brookfield Engineering Laboratories Inc.

Burns, R.E. 1963. Methods of tannin analysis for forage crop evaluation. Georgia Agricultural Experiment Station Technical Bulletin 32:1–14.

Concon, J.M., and Soltess, D. 1973. Rapid micro-Kjeldahl digestion of cereal grains and other biological materials. Annals of Biochemistry 53:35–41.

CSC Scientific Co. 1990. Operating instructions for the Bostwick consistometer no.24925-000. Fairfax, VA, USA: CSC Scientific Company Inc.

Daiber, K.H. 1971. Grain and malting quality of sorghum cultivars, II, 1970 harvest. *In* Scientia, Chem 180. Pretoria, South Africa: National

Chemical Research Laboratory, Council for Scientific and Industrial Research.

Downing, D.L. 1984. Gum and starch technology. *in* 18th Annual Symposium, Special Report 53. Geneva, NY, USA: New York State Agricultural Experiment Station.

Dyer, T.A. and Novellie, L. 1966. Kaffircorn malting and brewing studies. XVI. The distribution and activity of α- and ß-amylases in germinating kaffircorn. Journal of the Science of Food and Agriculture 17:449–456.

Fred Stein Laboratories. 1951. Steinlite operating instructions. Atchison, Kansas, USA: Fred Stein Laboratories Inc.

Gomez, K.A., and Gomez, A.A. 1976. Statistical procedures for agricultural research. 2nd edn. Los Baños, The Philippines: International Rice Research Institute.

Gomez, M.I. 1993. Comparative evaluation and optimization of a milling system for small grains. Pages 463–475 *in* Cereal Science and Technology: Impact on a Changing Africa. Selected papers from the ICC International Symposium, April 1993, Pretoria, South Africa (Taylor, J.R.N.T., Randall, P.G., and Viljoen, J.H., eds). Pretoria, South Africa: CSIR.

Guiragossian, V.Y., Van Scoyoc, S., and Axtell, J.D. 1977. Chemical and biological methods for grain and forage sorghum. Departmental Mimeograph. West Lafayette, Indiana 47907, USA: Department of Agronomy, Purdue University.

Hahn, D.H., Rooney, L.W., and Earp, C.F. 1984. Tannins and phenols of sorghum. Cereal Foods World 29(12):776–779.

Hallgren, L., and Murty, D.S. 1983. A screening test for grain hardness in sorghum employing density grading in sodium nitrate solution. Journal of Cereal Science 1:265–274.

Heinrich's Chibuku Breweries Ltd. 1968. Technical manual. Method B.1.2.11. Harare, Zimbabwe: Heinrich's Chibuku Breweries Ltd.

IBPGR and ICRISAT. 1993a. Descriptors for sorghum [*Sorghum bicolor* (L.) Moench]. Rome, Italy: International Board for Plant Genetic Resources; Patancheru, A.P., India: International Crops Research Institute for the Semi-Arid Tropics.

IBPGR and ICRISAT. 1993b. Descriptors for pearl millet [*Pennisetum glaucum* (L.) R. Br.]. Rome, Italy: International Board for Plant Genetic Resources; Patancheru, A.P., India: International Crops Research Institute for the Semi-Arid Tropics.

Kett Electric Laboratory. Operating manual for "Pearlest". Tokyo, Japan: Kett Electric Laboratory.

Kirleis, A.W., and Crosby, K.D. 1981. Sorghum hardness: comparison of methods for its evaluation. Pages 231–241 *in* Proceedings of the International Symposium on Sorghum Grain Quality, 28–31 Oct 1981, ICRISAT Center. Patancheru, A.P., India: International Crops Research Institute for the Semi-Arid Tropics.

Maxson, E.D., and Rooney, L.W. 1972. Evaluation of methods for tannin analysis in sorghum grain. Cereal Chemistry 49:719–729.

McLaughlin Shull, J., Oumarou, M., Kirleis, A.W., and Clark, J.W. 1987. Sorghum quality laboratory manual for use in West Africa. West Lafayette, Indiana 47907, USA: Purdue Research Foundation.

Mertz, E.T., Hassen, M.M., Cairns-Whittern, C., Kirleis, A.W., Tu, L., and Axtell, J.D. 1984. Pepsin digestibility of proteins in sorghum and other major cereals. Proceedings of the National Academy of Sciences, USA 81:1–2.

National Manufacturing Co. (no date) Instruction sheet for the National loaf volumeter. Lincoln, Nebraska, USA: National Manufacturing Co.

Novellie, L. 1985. Sorghum quality for malting and brewing. Pages 59-63 *in* The processing of sorghum and millets: criteria for quality of grains and products for human foods (Dendy, D.A.V., ed). Vienna, Austria: International Association for Cereal Science and Technology.

Oomah, B.D., Reichert, R.D., and Youngs, C.G. 1981. A novel, multi-sample, tangential abrasive dehulling device (TADD). Cereal Chemistry 58:392.

Pomeranz, Y., and Meloan, C. 1978. Page 671 *in* Food analysis: theory and practice. Revised edn. Westport, Connecticut, USA: AVI Publishing Company.

Price, M.L., and Butler, L.G. 1977. Rapid visual estimation and spectrophotometric determination of tannin content of sorghum grain. Journal of Agricultural Food Chemistry 25:1268–1272.

Price, M.L., Van Scoyoc, S., and Butler, L.G. 1978. A critical evaluation of the vanillin reactions as an assay for tannins in sorghum grain. Journal of Agricultural Food Chemistry 26:1214–1218.

Reichert, R.D., Tyler, R.T., York, A.E., Schwab, D.J., Tatarynovich, J.E., and Mwasaru, M.A. 1986. Description of a production model of the tangential abrasive dehulling device and its application to breeders' samples. Cereal Chemistry 63(3):201–207.

Stevens Advanced Weighing Systems. 1979. Technical manual for the Stevens L.F.R.A. texture analyzer 1 000 g. Essex, UK: Stevens Advanced Weighing Systems.

Taylor, J.R.N. and von Benecke, R. 1990. Development of a simple assay for the direct determination of ß-amylase in sorghum malt. Pages 344–347 *in* Proceedings of the Third AVIEMORE Conference on Malting, Brewing and Distilling (Campbell, I., ed.). London, UK: Institute of Brewing.

Udy Corp. 1960. Udy cyclone sample mill operating manual. Fort Collins, Colorado, USA: Udy Corporation.

Appendixes

Appendix 1: Steinlite Conversion Chart

Steinlite Electronic Tester – Model G – Grain Sorghum, 150 g (sample weight), 80°F (convert all readings to 80°F).

Meter	Selector Button B	Selector Button C	Selector Button D	Meter	Selector Button B	Selector Button C	Selector Button D
	Percent Moisture				Percent Moisture		
5				53	7.04	15.34	20.27
6				54	7.13	15.42	20.33
7				55	7.22	15.50	20.39
8		10.56		56	7.31	15.58	20.45
9		10.73		57	7.40	15.66	20.51
10		10.90		58	7.49	15.74	20.57
11		11.06		59	7.58	15.82	20.63
12		11.22		60	7.67	15.90	20.69
13		11.34		61	7.76	15.98	20.75
14		11.46		62	7.85	16.06	20.81
15		11.58		63	7.94	16.14	20.87
16		11.69		64	8.03	16.22	20.93
17		11.80		65	8.12	16.30	20.99
18		11.91	18.03	66	8.21	16.38	21.05
19		12.02	18.11	67	8.30	16.46	21.11
20		12.13	18.19	68	8.39	16.54	21.17
21		12.24	18.27	69	8.48	16.62	21.23
22		12.35	18.35	70	8.57	16.70	21.29
23		12.46	18.43	71	8.66	16.78	21.35
24		12.57	18.51	72	8.75	16.86	21.41
25		12.68	18.59	73	8.84	16.93	21.47
26		12.79	18.65	74	8.93	17.00	21.53
27		12.90	18.71	75	9.02	17.07	21.59
28		13.01	18.77	76	9.11	17.14	21.65
29		13.12	18.83	77	9.20	17.21	21.71
30		13.23	18.89	78	9.29	17.28	21.77
31		13.34	18.95	79	9.38	17.35	21.83
32		13.45	19.01	80	9.47	17.42	21.89
33		13.56	19.07	81	9.56	17.49	21.95
34		13.67	19.13	82	9.65	17.56	22.01

(continued overleaf)

Temperature Correction °F		%
29	Add	2.55
30	Add	2.50
31	Add	2.45
32	Add	2.40
33	Add	2.35
34	Add	2.30
35	Add	2.25
36	Add	2.20
37	Add	2.15
38	Add	2.10
39	Add	2.05
40	Add	2.00
41	Add	1.95
42	Add	1.90
43	Add	1.85
44	Add	1.80
45	Add	1.75
46	Add	1.70
47	Add	1.65
48	Add	1.60
49	Add	1.55
50	Add	1.50
51	Add	1.45
52	Add	1.40
53	Add	1.35
54	Add	1.30
55	Add	1.25
56	Add	1.20
57	Add	1.15
58	Add	1.10
59	Add	1.05
60	Add	1.00
61	Add	0.95
62	Add	0.90
63	Add	0.85
64	Add	0.80
65	Add	0.75
66	Add	0.70
67	Add	0.65
68	Add	0.60

Steinlite Electronic Tester: continued

Meter	Selector Button B	C	D	Meter	Selector Button B	C	D
	Percent Moisture				Percent Moisture		
35		13.78	19.19	83	9.74	17.62	22.07
36		13.89	19.25	84	9.83	17.68	22.13
37		14.00	19.31	85	9.92	17.74	22.19
38		14.09	19.37	86	10.01	17.80	22.25
39		14.18	19.43	87	10.10	17.86	22.30
40		14.27	19.49	88	10.18	17.92	22.35
41		14.36	19.55	89	10.26	17.98	22.40
42		14.45	19.61	90	10.34	18.04	22.45
43		14.54	19.67	91	10.42	18.10	22.50
44		14.62	19.73	92	10.50	18.16	22.55
45		14.70	19.79	93	10.58	18.22	22.60
46		14.78	19.85	94	10.66	18.28	22.65
47		14.86	19.91	95	10.74	18.34	22.70
48		14.94	19.97	96	10.85	18.40	22.75
49		15.02	20.03	97	10.90	18.45	22.80
50		15.10	20.09	98	10.98	18.50	22.85
51	6.86	15.18	20.15	99	11.06	18.55	22.90
52	6.95	15.26	20.21	100	11.14	18.60	22.95

Temperature Correction °F		%
69	Add	0.55
70	Add	0.50
71	Add	0.45
72	Add	0.40
73	Add	0.35
74	Add	0.30
75	Add	0.25
76	Add	0.20
77	Add	0.15
78	Add	0.10
79	Add	0.05
80	Add	0.00
81	Sub.	0.05
82	Sub.	0.10
83	Sub.	0.15
84	Sub.	0.20
85	Sub.	0.20
86	Sub.	0.25
87	Sub.	0.30
88	Sub.	0.35
89	Sub.	0.40
90	Sub.	0.45

Appendix 2: Glossary

adjunct Grain added during brewing as source of starch for diastatic enzymes.

agronomic Pertaining to soil management and crop production.

beer Alcoholic liquor from fermented malt.

endosperm Storage tissue in seeds utilized during germination and seedling growth.

fines Small particles in dehulling or milling.

germ Embryo.

grits Coarse meal.

homogeneous Uniform.

malt Grain prepared for brewing by steeping, germination, and drying.

mash Malt mixed with hot water to form wort for brewing.

pericarp Outer coat of the grain.

slurry Suspension of fine, solid material in water.

steeping Soaking/immersing in water.

tannins Water-soluble polyphenols of high molecular weight capable of precipitating proteins from aqueous solutions. Sorghum contains condensed tannins predominantly found in the pericarp and testa.

testa In some sorghum varieties this is seen as a heavily-pigmented layer found just under the pericarp.

throughs In sieving, the material that has passed through the sieve.

wort Infusion of malt before it is fermented into beer.

Appendix 3: Abbreviations, Acronyms, and Symbols

AACC American Association of Cereal Chemists

AOAC Association of Official Analytical Chemists

approx. approximate(ly)

AR analytical reagent, i.e., a chemical complying with the highest quality

av. average

bp boiling point

°C degree Celsius

CE catechin equivalent

CIDA Canadian International Development Agency, Ottawa

cm centimeter

conc. concentrated

CP chemically pure (reagent); crude protein (analysis)

cps centipoise (unit of viscosity measurement)

DHL dehulling loss

dia. diameter

dm decimeter

DMB dry-matter basis

DP diastatic power

DU diastatic unit

edn edition

e.g. For example

ea. each

°F degree Fahrenheit

Fl. floater

FT food technology

g gram (when weighing) or gravity (when centrifuging)

Gp group

GPR general-purpose reagent

GQE grain-quality evaluation

i.e.	that is
IBPGR	International Board for Plant Genetic Resources (now IPGRI: International Plant Genetic Resources Institute, Rome, Italy)
ICRISAT	International Crops Research Institute for the Semi-Arid Tropics, Patancheru, A.P., India
L/F	low form
M	molar/molarity (concentration)
MC	moisture content
µg	microgram
mg	milligram
mL	milliliter
mm	millimeter
MY	milling yield
N	normal/normality (concentration)
N.A.	not applicable
nm	nanometer
no.	number
ppm	parts per million
QL	qualitative
QT	quantitative
RD	raw data
rev min^{-1}	revolution per minute (rpm)
SADC	Southern African Development Community
SG	specific gravity
SMIP	Sorghum and Millet Improvement Program (ICRISAT)
T/F	tall form
TADD	tangential abrasive dehulling device
UV	ultraviolet
VH	visual hardness
WA	water absorption
W/M	wide-mouthed
wt	weight
w/w	weight-for-weight
>	greater than
≥	greater than or equal to
≃	approximately equal to
≤	less than or equal to
%	percent
#	number

Appendix 4: Equipment Suppliers

Agtron Inc.
1095 Spice Island Drive
#100 Sparks
Nevada 89431
USA

CSC Scientific Co. Inc.
8315 Lee Highway
Fairfax
VA 22031
USA

Glass Blowing Industries (Pvt.) Ltd
PO Box AY 275
Amby
Harare
ZIMBABWE

National Manufacturing
A Division of TMCO, Inc.
507 J Street
Lincoln
Nebraska 68508
USA

Sigma Chemical Company
PO Box 14508
St Louis
MO 63178-9916
USA

Udy Corporation
201 Rome Court
Fort Collins
Colorado 80524
USA

Brookfield Eng. Laboratories Inc.
240 Cushing Street
Stoughton
MA 02072
USA

Fred Stein Laboratories Inc.
121 North Fourth Street
Atchison
Kansas 66002
USA

Kett Electric Laboratory
No.8-1, 1-Chome, Minami
Magome, Ota-ku
Tokyo
JAPAN

Seedburo Equipment Co.
1022 West Jackson Boulevard
Chicago
IL 60607-2990
USA

Stevens Advanced Weighing
Systems Ltd
Oak Industrial Park
Chelmsford Road
Dunmow, Essex CM6 1XN
UK

Venables Machine Works Ltd
502 50th Street East
Saskatoon, Saskatchewan
S7K 6L9
CANADA

Appendix 5: Empirical Database for Sorghum and Pearl Millet Grain-Quality and Malting Data

This appendix comprises data from the analyses of sorghum and pearl millet grain sown during SMIP/SADC variety trials and harvested at the end of the 1992/93 season, i.e.:

- sorghum grain-quality evaluation data (Tables S1 to S18);
- sorghum malting data (Tables S1m to S18m);
- pearl millet grain-quality evaluation data (Tables P1 and P2); and
- pearl millet malting data (Table P2m).

Table S1—Grain-quality evaluation of 25 entries and two controls in the 1992/93 season SMIP SADC Sorghum Variety Trial: White.

Variety	Visual hardness score	Kernel weight (g 100^{-1})	Floaters (%)	Dehulling loss (%)	Milling yield (%)	Water absorption (%)	Size fraction: large[1]	Size fraction: medium[2]	Size fraction: small[3]	Reflectance value: dry	Reflectance value: wet
SDSL 88059	4.7	2.48	60	12.2	85.4	3.2	41.1	58.7	0.0	71.0	50.5
NL 600	4.6	2.28	26	10.2	87.3	8.3	19.1	80.7	0.1	72.6	52.4
SDSL 87021	4.6	2.47	40	22.0	74.9	8.7	14.0	85.9	0.1	74.6	54.2
SDSL 89426	4.4	2.43	29	10.6	87.9	5.2	15.6	84.3	0.0	71.8	49.2
SDSL 89420	4.4	2.48	50	12.3	84.7	6.3	25.5	69.8	0.1	71.9	51.3
SDSL 88160	4.3	1.72	62	13.8	83.1	7.9	3.3	96.4	0.2	66.1	43.5
ZSV 5	4.3	2.34	38	11.9	86.0	10.8	24.5	77.4	0.1	75.2	56.4
ZSV 6	4.1	2.67	50	14.4	83.4	6.2	31.0	69.0	0.0	76.2	56.1
SDSL 87049-T	4.1	2.21	61	15.2	82.2	10.8	15.0	84.5	0.1	71.4	49.5
SDS 2690	4.0	1.57	60	12.2	84.1	9.7	4.8	94.8	0.4	71.7	51.2
SDSL 88219	4.0	2.55	77	13.6	84.5	5.9	48.7	51.2	0.0	73.3	53.3
ZSV 8	3.9	1.89	37	14.3	83.4	7.8	1.1	98.5	0.3	73.4	53.0
Kuyuma	3.9	1.89	42	14.0	83.8	9.4	2.1	97.8	0.1	74.4	55.0
SDSL 87040	3.9	2.13	72	11.8	85.9	10.2	17.4	82.5	0.1	70.9	50.7
Larsvyt 46-85	3.9	1.96	58	16.9	81.0	10.6	1.4	98.3	0.2	77.1	57.3
SDSL 87049-D	3.9	1.89	35	12.6	84.9	5.7	4.2	95.7	0.1	72.1	51.4
Sima	3.9	3.11	19	12.6	85.6	6.9	61.2	38.2	0.0	76.4	56.2
SDSL 87029	3.9	1.93	59	21.0	76.3	12.0	10.1	89.3	0.4	74.2	54.8
SDSL 87015	3.8	2.08	91	14.7	82.6	9.2	24.0	75.9	0.1	72.3	52.1
SDS 2293-6	3.7	2.14	38	10.5	87.7	2.8	5.2	94.8	0.0	69.7	48.2
NL 866-1	3.6	2.08	90	21.0	76.5	12.5	5.8	94.0	0.2	74.1	52.2
Macia	3.6	1.68	65	17.2	80.1	14.3	0.3	99.3	0.4	75.3	54.3
SV 2	2.9	2.16	55	33.6	64.1	11.5	3.9	95.9	0.1	76.3	57.4
NL 279	2.8	1.98	92	22.6	75.4	5.9	6.1	93.7	0.1	68.0	45.4
SDSL 87046	2.1	2.30	82	27.1	70.7	9.7	16.3	83.3	0.3	73.7	53.4
Controls											
Segaolane B	4.4	2.22	29	12.5	84.0	4.8	7.0	92.5	0.1	72.4	52.1
SV 1	4.2	1.83	46	15.5	81.3	8.7	0.6	98.8	0.6	74.4	54.1
SE ±	0.034	0.024	1.398	0.328	0.424	0.186	0.712	0.210	0.016	0.114	0.148
Mean	3.90	2.17	54.24	15.77	81.72	8.33	15.08	84.48	0.15	72.95	52.39
CV %	8.7	3.1	7.7	4.2	1.0	4.5	9.4	0.5	16.6	0.3	0.6

[1] % >4.0 mm. [2] % 4.0—2.6 mm. [3] % <2.6 mm.

Table S1m—Malting data for 25 entries and two controls in the 1992/93 season SMIP SADC Sorghum Variety Trial: White.

Variety	Grain color	Germination count: 24 h	Germination count: 48 h	Mold count	Malting loss (%)	Total loss (%)	Diastatic power (DU g^{-1})
SDSL 88059	Creamy-white	85	96	2	15.7	22.2	33.0
NL 600	White, mottled	100	100	0	16.2	25.1	42.5
SDSL 87021	Creamy-white, mottled	97	98	1	15.2	23.4	30.6
SDSL 89426	Yellowy-white, mottled	83	96	0	16.2	24.0	32.3
SDSL 89420	Creamy-white	86	96	1	16.2	23.1	25.4
SDSL 88160	Creamy-white	78	81	0	17.0	24.5	43.2
ZSV 5	Creamy-yellow-white	96	97	2	15.8	23.6	35.3
ZSV 6	Yellowy-white	93	100	1	7.2	20.5	25.3
SDSL 87049-T	Yellowy-white	81	86	2	16.1	23.0	27.3
SDS 2690	Creamy-white	80	86	1	17.0	25.0	42.7
SDSL 88219	Yellowy-white	93	94	2	15.1	20.7	29.9
ZSV 8	Yellowy-white	91	93	0	15.6	23.7	39.7
Kuyuma	White	98	99	1	17.9	28.3	40.4
SDSL 87040	Yellowy-white	49	91	0	16.0	23.4	32.1
Larsvyt 46-85	White	94	98	0	15.1	22.3	31.6
SDSL 87049-D	Yellowy-white	86	94	0	16.2	22.8	41.6
Sima	Yellowy-white	97	98	3	15.6	20.9	20.7
SDSL 87029	Creamy-white	97	98	0	17.3	27.5	40.7
SDSL 87015	Creamy-white	81	86	0	16.6	24.0	29.9
SDS 2293-6	Creamy-white	90	96	3	15.5	21.7	28.8
NL 866-1	Creamy-yellow-white	94	97	2	15.7	22.8	40.8
Macia	White	93	98	0	15.4	23.9	42.6
SV 2	Creamy-white	63	94	4	12.9	18.3	9.8
NL 279	Yellowy-white, mottled	86	89	4	14.7	20.6	25.7
SDSL 87046	Yellowy-white	95	98	3	16.9	24.8	33.7
Controls							
Segaolane B	Creamy-white	91	92	1	13.7	19.1	23.5
SV 1	Creamy-white	96	97	1	14.3	20.7	40.7
Mean		87.9	94.4	1.3	15.5	23.0	33.0

Table S2—Grain-quality evaluation of 16 entries and two controls in the 1992/93 season SMIP SADC Sorghum Variety Trial: Red.

Variety	Visual hardness score	Kernel weight (g 100^{-1})	Floaters (%)	Dehulling loss (%)	Milling yield (%)	Water absorption (%)	Size fraction: large[1]	Size fraction: medium[2]	Size fraction: small[3]	Reflectance value: dry	Reflectance value: wet	Tannin content (≃%CE)
Larsvyt 19	4.9	1.44	45	16.2	81.8	9.4	0.3	95.4	4.2	53.5	30.5	0.3
Town	4.5	2.09	23	10.3	85.2	4.9	1.5	98.3	0.1	65.8	44.8	0.2
MRS 13	4.3	1.66	49	14.2	83.1	4.6	0.3	97.3	2.4	56.2	33.7	0.3
SDSL 91001	3.8	1.88	80	20.7	77.3	5.6	2.2	97.0	0.8	53.1	29.0	0.3
Marupantse	3.7	2.02	69	18.6	78.8	5.4	1.6	98.1	0.3	68.9	49.5	0.2
SDS 1948-3	3.6	1.79	73	12.1	84.9	5.0	0.6	98.3	1.1	60.5	37.6	0.2
NL 255	3.4	2.11	97	15.7	82.0	5.3	3.7	96.2	0.1	57.2	33.5	2.0
SDSL 88298	3.4	1.82	80	16.2	80.6	5.2	0.7	98.4	0.8	55.5	32.6	0.5
SDS 1710-1	3.2	1.74	66	19.7	77.4	4.9	0.1	98.8	1.0	67.3	45.9	0.3
NL 228	2.9	1.92	99	19.1	78.1	7.3	1.9	97.9	0.2	55.9	31.9	0.5
NL 609	2.8	1.74	99	29.5	67.4	8.6	3.2	96.5	0.2	58.7	35.0	4.0
SDSL 89473	2.7	2.44	80	19.4	78.3	4.8	9.0	90.9	0.1	64.2	42.1	0.3
SDS 3472	2.2	2.62	100	26.3	71.5	9.0	23.3	76.6	0.0	57.6	33.1	3.5
MRS 94	2.1	2.00	100	39.6	58.7	4.3	0.4	99.3	0.3	58.3	34.5	4.0
SDSL 89502	1.6	2.59	94	19.5	77.6	5.4	3.8	96.2	0.0	62.8	40.8	0.3
ZSV 3	1.0	3.32	100	39.2	57.2	9.1	92.5	7.5	0.0	68.0	46.7	2.0
Controls												
Serena	2.1	1.99	100	25.5	71.4	9.4	7.7	92.0	0.1	57.5	31.7	3.0
DC 75	1.5	1.62	100	27.1	69.8	9.5	1.4	98.3	0.3	56.7	30.8	4.0
SE ±	0.050	0.018	0.920	0.452	0.462	0.186	0.143	0.152	0.063	0.211	0.116	0.084
Mean	2.96	2.04	80.78	21.60	75.60	6.54	8.55	90.71	0.67	59.85	36.85	1.42
CV %	17.0	2.5	3.4	4.2	1.2	5.7	3.3	0.3	18.7	0.7	0.6	11.8

[1] % >4.0 mm. [2] % 4.0—2.6 mm. [3] % <2.6 mm.

Table S2m—Malting data for 16 entries and two controls in the 1992/93 season SMIP SADC Sorghum Variety Trial: Red.

Variety	Grain color	Germination count: 24 h	Germination count: 48 h	Mold count	Malting loss (%)	Total loss (%)	Diastatic power (DU g^{-1})
Larsvyt 19	Red	85	91	0	16.8	25.0	31.5
Town	Red	66	88	2	13.2	19.7	14.2
MRS 13	Red	37	65	2	11.0	13.0	15.3
SDSL 91001	Red	60	81	2	13.1	17.2	20.6
Marupantse	Creamy-red, mottled	81	90	3	12.5	15.3	8.1
SDS 1948-3	Red	68	87	0	10.2	12.9	17.5
NL 255	Brown, mottled	74	79	3	14.2	20.0	20.8
SDSL 88298	Red	33	69	3	14.5	22.7	29.1
SDS 1710-1	Red	34	68	2	9.2	10.7	8.7
NL 228	Brown	84	98	2	11.7	14.4	20.8
NL 609	Brown	92	97	0	14.2	20.2	10.8
SDSL 89473	Red	72	87	3	12.8	17.3	14.0
SDS 3472	Brown	90	95	2	13.3	20.1	10.4
MRS 94	Brown	27	48	3	10.5	11.4	7.5
SDSL 89502	Red	55	60	1	11.8	15.0	11.0
ZSV 3	Brown	98	100	0	10.8	13.6	16.4
Controls							
Serena	Brown	96	99	0	15.3	23.8	19.7
DC 75	Brown	82	97	0	13.4	20.1	33.2
Mean		68.6	83.3	1.6	12.7	17.4	17.2

Table S3—Grain-quality evaluation of 32 entries and one control in the 1992/93 season SMIP SADC Sorghum Hybrid Trial: White.

Hybrid	Visual hardness score	Kernel weight (g 100^{-1})	Floaters (%)	Dehulling loss (%)	Milling yield (%)	Water absorption (%)	Size fraction: large[1]	Size fraction: medium[2]	Size fraction: small[3]	Reflectance value: dry	Reflectance value: wet
SDSH 48	4.5	2.10	47	12.7	84.8	11.0	2.6	96.8	0.5	76.3	56.7
SDSH 192	4.5	2.23	34	12.1	84.9	14.1	13.9	85.6	0.2	75.9	55.6
SDSH 19	4.4	2.07	41	12.3	84.2	9.4	0.3	98.7	0.7	76.6	57.2
SDSH 325	4.4	2.68	21	12.7	83.6	13.5	20.0	79.8	0.1	77.3	57.6
SDSH 300	4.4	2.10	33	12.7	84.9	10.8	2.0	97.3	0.6	77.5	58.3
MMSH 1076	4.3	2.22	38	12.4	84.5	13.7	4.0	96.0	0.3	76.9	57.9
MMSH 1156	4.3	2.29	39	12.8	84.5	11.9	9.9	90.3	0.1	77.8	57.7
MMSH 1222	4.2	2.42	31	12.8	84.9	11.2	13.0	86.4	0.2	77.8	57.4
SDSH 404	4.2	2.78	66	12.6	84.4	12.5	3.4	96.0	0.6	72.3	50.0
MMSH 497	4.1	2.04	76	15.0	80.4	11.9	13.7	85.0	0.1	74.7	54.2
MMSH 1077	4.1	2.16	46	14.0	83.3	11.6	10.3	89.2	0.2	77.2	57.8
SDSH 149	4.1	1.84	26	13.8	82.8	10.2	0.3	98.8	0.4	74.6	54.5
SDSH 336	4.0	2.04	26	11.9	85.5	12.1	4.8	94.7	0.3	76.2	55.5
SDSH 8	4.0	2.14	59	13.3	83.1	11.4	13.3	86.4	0.1	77.0	58.0
MMSH 928	4.0	2.22	60	12.9	83.4	11.7	23.0	76.7	0.0	76.3	56.0
SDSH 148	4.0	1.67	31	12.2	85.0	7.7	1.6	97.7	0.6	75.5	55.5
SDSH 328	3.9	2.30	68	23.4	74.0	11.2	9.1	90.5	0.1	80.8	61.6
MMSH 1239	3.9	2.32	51	14.3	83.0	11.7	10.0	88.2	0.2	78.0	58.1
MMSH 1040	3.9	1.83	56	13.4	83.4	12.7	2.7	95.9	0.6	74.9	55.3
MMSH 1039	3.9	2.10	58	14.3	82.3	12.5	3.2	96.2	0.4	76.0	57.0
SDSH 327	3.8	2.42	68	19.4	76.9	13.8	9.9	89.5	0.1	80.0	61.1
MMSH 1056	3.7	2.23	66	15.7	81.0	12.2	9.9	89.2	0.4	74.8	54.9
MMSH 1038	3.7	1.89	66	14.1	84.2	11.9	2.9	95.7	0.7	73.3	54.9
SDSH 400	3.7	2.50	81	16.8	79.9	11.7	15.2	90.4	0.1	65.4	39.7
MMSH 1257	3.7	2.39	71	18.5	79.8	12.5	9.5	89.8	0.2	76.2	57.2
SDSH 339	3.6	1.97	74	16.4	81.1	12.2	2.8	96.3	0.6	77.5	58.3
SDSH 236	3.5	2.73	60	16.6	79.9	11.3	3.1	96.6	0.9	76.9	55.3
SDSH 338	3.4	2.18	47	17.4	80.4	10.7	0.8	96.7	0.2	77.3	57.6
MMSH 707	3.3	2.18	64	17.5	80.0	12.0	5.1	94.0	0.3	76.2	56.7
8636 H	3.3	2.07	74	17.0	79.5	13.7	13.9	85.8	0.1	77.4	58.6
SDSH 38	3.2	1.70	70	17.4	79.9	11.8	1.9	96.7	0.7	77.5	58.4
8605 H	3.1	1.64	58	18.7	79.5	11.9	0.2	98.5	0.6	78.0	59.4
Control											
DC 75	1.2	1.59	100	28.0	68.8	12.1	0.9	97.8	0.6	59.4	31.3
SE ±	0.039	0.024	0.993	0.310	0.409	0.176	0.214	0.420	0.042	0.121	0.133
Mean	3.81	2.15	54.74	15.30	81.84	11.84	7.17	92.21	0.35	75.72	55.59
CV %	10.2	3.3	5.4	4.1	1.0	3.0	6.0	0.9	24.0	0.3	0.5

[1] % >4.0 mm. [2] % 4.0—2.6 mm. [3] % <2.6 mm.

Table S3m—Malting data for 32 entries and one control in the 1992/93 season SMIP SADC Sorghum Hybrid Trial: White.

Hybrid	Grain color	Germination count: 24 h	Germination count: 48 h	Mold count	Malting loss (%)	Total loss (%)	Diastatic power (DU g^{-1})
SDSH 48	Creamy-white	88	99	0	12.8	18.2	31.2
SDSH 192	Creamy-yellow-white	94	97	1	16.6	26.4	37.5
SDSH 19	White, mottled	98	98	2	12.7	19.0	25.2
SDSH 325	Creamy-white	89	97	2	13.9	21.3	33.5
SDSH 300	Creamy-yellow-white	99	99	1	13.9	21.1	41.4
MMSH 1076	White	95	98	1	13.1	18.1	28.1
MMSH 1156	Creamy-white	86	94	2	13.8	20.1	30.7
MMSH 1222	Creamy-white	94	96	1	12.9	20.7	33.4
SDSH 404	Yellowy-white	85	90	3	16.1	23.8	27.4
MMSH 497	Creamy-white	76	83	4	18.2	26.7	35.5
MMSH 1077	Creamy-white	92	93	2	12.5	17.4	34.1
SDSH 149	Creamy-white	97	99	0	13.7	22.1	31.7
SDSH 336	Creamy-white	98	99	2	12.9	19.9	40.5
SDSH 8	Creamy-white	97	99	1	15.5	26.4	53.1
MMSH 928	Creamy-white	82	99	0	12.2	16.9	39.3
SDSH 148	Creamy-white	98	100	1	13.7	21.5	39.5
SDSH 328	White	91	96	3	14.5	23.4	35.9
MMSH 1239	Creamy-white	99	99	1	15.0	24.8	40.3
MMSH 1040	Creamy-white	89	98	2	18.4	29.3	42.1
MMSH 1039	Creamy-white	95	97	2	11.9	16.3	26.4
SDSH 327	Creamy-white	94	98	1	13.5	24.1	34.1
MMSH 1056	Creamy-yellow-white	69	82	2	14.0	20.4	27.2
MMSH 1038	White	94	99	1	13.6	21.3	46.4
SDSH 400	Creamy-white	96	97	5	13.9	18.4	23.6
MMSH 1257	Yellowy-white	84	89	2	13.5	17.4	27.9
SDSH 339	Creamy-white	87	98	1	16.1	26.9	57.1
SDSH 236	White, mottled	95	95	1	12.0	16.8	27.9
SDSH 338	Creamy-yellow-white	93	97	3	12.8	17.1	13.1
MMSH 707	Creamy-white	83	88	3	15.0	21.5	27.1
8636 H	Creamy-white	100	100	3	14.2	24.0	36.0
SDSH 38	Creamy-white	94	97	2	14.2	22.3	42.4
8605 H	White	96	99	3	16.3	27.8	45.0
Control							
DC 75	Brown	92	97	1	14.4	23.4	48.4
Mean		91.5	95.9	1.8	14.2	21.7	35.2

Table S4—Grain-quality evaluation of 22 entries and one control in the 1992/93 season SMIP SADC Sorghum Hybrid Trial: Red.

Hybrid	Visual hardness score	Kernel weight (g 100^{-1})	Floaters (%)	Dehulling loss (%)	Milling yield (%)	Water absorption (%)	Size fraction: large[1]	Size fraction: medium[2]	Size fraction: small[3]	Reflectance value: dry	Reflectance value: wet	Tannin content (≃%CE)
SDSH 393	3.9	2.48	57	13.6	84.1	6.7	22.6	77.3	0.1	66.2	46.4	0.3
SDSH 49	3.4	1.81	88	14.7	83.4	8.3	2.1	97.2	0.7	64.3	40.6	0.2
8739-H	3.4	2.08	59	16.8	80.4	7.0	9.2	90.6	0.2	69.1	47.6	0.2
MMSH 619	3.3	1.96	54	15.5	82.3	8.1	2.2	97.4	0.2	69.7	48.6	0.5
8716-H	3.1	1.79	91	21.0	76.4	10.2	4.8	94.9	0.3	67.6	46.8	0.2
SDSH 384	3.1	1.66	85	17.0	80.7	9.5	0.5	98.3	1.0	68.3	48.6	0.3
SDSH 430	3.1	1.89	89	17.4	80.4	9.4	2.9	96.6	0.5	68.3	46.7	0.3
SDSH 388	3.0	2.06	77	20.0	77.6	9.3	4.4	95.3	0.3	71.9	50.4	0.3
SDSH 398	2.9	2.96	83	14.4	82.1	5.3	67.0	32.9	0.1	68.3	45.8	0.2
MMSH 1139	2.6	1.72	93	16.3	81.4	11.2	1.2	98.4	0.5	58.0	33.9	4.0
MMSH 375	2.0	1.86	96	19.2	78.3	8.2	0.8	99.1	0.1	59.0	32.2	4.0
MMSH 600	1.9	1.90	97	20.3	77.6	7.8	6.0	93.1	0.3	60.2	35.3	3.0
MMSH 1025	1.9	1.64	89	16.0	82.5	9.5	0.5	99.2	0.2	58.2	34.2	0.5
SDSH 409	1.8	1.93	94	28.9	69.2	8.2	15.4	84.3	0.3	59.8	33.9	3.0
MMSH 1141	1.8	1.87	98	19.3	78.7	11.6	0.5	99.2	0.2	58.8	31.7	3.0
SDSH 376	1.7	2.59	97	24.6	73.0	9.2	47.8	52.1	0.1	61.5	35.7	5.0
SDSH 378	1.7	1.75	98	19.9	78.5	9.7	1.8	97.9	0.3	55.8	31.4	4.0
MMSH 1012	1.7	1.63	89	18.0	79.3	9.3	5.6	94.1	0.3	61.2	35.7	4.0
MMSH 1030	1.7	1.61	97	18.7	79.4	11.0	0.4	99.2	0.4	54.5	29.4	3.5
MMSH 740	1.6	1.75	93	17.5	79.8	10.6	0.4	99.5	0.2	59.1	32.2	4.5
SDSH 513	1.3	2.07	99	25.1	72.7	14.4	5.9	94.0	0.1	61.5	37.4	5.0
MMSH 413	1.2	2.01	100	21.3	76.7	7.8	5.4	94.4	0.2	56.9	32.5	4.5
Control												
DC 75	1.4	1.58	100	25.0	72.5	14.2	1.3	98.1	0.5	58.9	31.7	4.0
SE ±	0.037	0.026	1.030	0.290	0.398	0.206	0.187	0.192	0.022	0.169	0.096	0.129
Mean	2.30	1.94	87.94	19.13	78.55	9.41	9.06	90.55	0.30	62.45	38.62	2.36
CV %	16.1	4.0	3.5	3.0	1.0	4.4	4.1	0.4	15.2	0.5	0.5	11.0

[1] % >4.0 mm. [2] % 4.0—2.6 mm. [3] % <2.6 mm.

Table S4m—Malting data for 22 entries and one control in the 1992/93 season SMIP SADC Sorghum Hybrid Trial: Red.

Hybrid	Grain color	Germination count: 24 h	Germination count: 48 h	Mold count	Malting loss (%)	Total loss (%)	Diastatic power (DU g^{-1})
SDSH 393	Red	89	97	0	14.3	23.1	41.0
SDSH 49	Red	90	97	0	14.8	24.0	57.3
8739 H	Red	95	96	0	14.1	22.9	49.7
MMSH 619	Red	94	99	0	13.0	21.1	39.3
8716 H	Red	91	97	0	12.5	19.0	48.9
SDSH 384	Red	97	98	0	15.4	25.0	46.3
SDSH 430	Red	90	95	0	13.8	24.6	59.9
SDSH 388	Red	97	99	0	13.6	19.8	38.0
SDSH 398	Red	85	95	4	13.4	19.4	37.7
MMSH 1139	Brown	87	93	0	15.3	26.6	49.7
MMSH 375	Brown	74	90	0	13.3	21.2	40.2
MMSH 600	Brown	81	89	5	14.0	19.7	32.0
MMSH 1025	Brown	96	98	0	14.6	22.1	54.5
SDSH 409	Brown	84	93	0	12.6	21.4	39.0
MMSH 1141	Brown	87	96	0	13.0	21.7	44.3
SDSH 376	Brown	68	94	0	12.4	19.7	35.9
SDSH 378	Brown	91	97	0	13.3	22.2	45.5
MMSH 1012	Brown	86	93	0	14.4	24.1	41.9
MMSH 1030	Brown	87	97	0	15.3	27.1	40.0
MMSH 740	Brown	81	93	0	12.3	18.8	43.8
SDSH 513	Brown	97	100	0	12.2	16.3	38.0
MMSH 413	Brown	85	94	0	13.2	23.0	38.2
Control							
DC 75	Brown	91	96	0	13.8	23.9	50.0
Mean		88.0	95.5	0.4	13.7	22.0	44.0

Table S5—Grain-quality evaluation of 21 entries and two controls in the 1992/93 season SMIP Sorghum Hybrid Trial.

Hybrid	Visual hardness score	Kernel weight (g 100⁻¹)	Floaters (%)	Dehulling loss (%)	Milling yield (%)	Water absorption (%)	Size fraction: large[1]	Size fraction: medium[2]	Size fraction: small[3]	Reflectance value: dry	Reflectance value: wet	Tannin content (≈%CE)
SDSH 204	4.8	2.05	5	9.9	87.3	6.4	1.0	98.8	0.2	76.6	58.8	0.0
SDSH 215	4.6	2.14	11	13.2	84.0	7.2	1.7	98.3	0.1	77.5	59.1	0.0
SDSH 18	4.5	3.39	20	11.1	85.5	5.1	83.3	16.7	0.0	75.8	56.4	0.0
SDSH 60	4.5	2.80	10	10.7	86.3	6.1	31.2	68.9	0.0	78.9	60.4	0.0
SDSH 157	4.4	2.00	21	10.9	87.8	7.4	2.9	96.6	0.2	73.5	53.2	0.0
SDSH 164	4.4	1.78	28	12.2	86.4	4.4	1.1	98.2	0.3	72.7	52.5	0.0
SDSH 208	4.3	2.51	12	11.1	84.7	4.9	12.8	87.2	0.0	76.3	56.6	0.0
SDSH 216	4.3	2.09	23	13.2	84.7	8.8	3.2	95.7	0.1	75.6	56.6	0.0
SDSH 181	4.1	1.94	27	14.5	82.9	7.6	1.2	97.9	0.5	75.0	56.4	0.0
SDSH 386	4.1	2.45	28	12.4	84.8	7.5	12.3	87.6	0.1	71.8	51.2	0.3
SDSH 17	3.9	3.00	28	11.7	86.6	4.6	57.5	42.4	0.0	71.4	51.2	0.0
SDSH 315	3.7	2.00	47	11.8	84.8	6.0	6.4	93.1	0.4	71.4	50.4	0.0
SDSH 343	3.7	2.42	60	14.1	83.2	7.7	9.2	89.8	0.1	75.5	56.7	0.0
SDSH 341	3.6	1.90	59	11.2	86.6	5.3	1.7	97.7	0.2	71.4	50.2	0.0
ZWSH 1	3.4	1.72	75	15.4	81.7	10.6	3.7	95.5	0.3	74.5	55.2	0.0
SDSH 195	3.2	1.80	76	16.0	81.0	5.3	3.4	96.1	0.3	73.7	54.1	0.0
SDSH 90012	2.3	2.03	83	22.9	74.3	6.0	4.3	95.5	0.2	61.6	35.5	2.5
SDSH 90003	1.9	2.23	96	24.2	72.8	8.2	16.9	83.0	0.1	62.9	36.5	3.0
SDSH 90011	1.9	2.04	84	17.1	80.2	9.7	11.7	88.3	0.1	60.4	35.4	3.0
SDSH 90004	1.8	1.64	84	17.7	79.0	10.7	1.5	98.2	0.4	59.5	33.6	2.0
SDSH 90006	1.7	1.85	94	28.3	68.4	9.3	4.7	94.9	0.4	62.1	36.1	2.5
Controls												
PNR 8544	3.0	1.47	83	19.4	77.5	5.6	0.4	97.1	2.4	75.0	55.5	0.0
DC 75	1.5	1.78	97	21.5	75.4	10.9	1.8	97.5	0.1	67.8	30.7	5.0
SE ±	0.051	0.018	1.060	0.353	0.494	0.130	0.171	0.271	0.016	1.509	0.126	0.102
Mean	3.44	2.13	50.10	15.23	81.98	7.19	11.90	87.60	0.27	71.32	49.64	0.79
CV %	14.9	2.6	6.3	4.6	1.2	3.6	2.9	0.6	10.5	4.2	0.5	25.7

[1] % >4.0 mm. [2] % 4.0—2.6 mm. [3] % <2.6 mm.

Table S5m—Malting data for 21 entries and two controls in the 1992/93 season SMIP Sorghum Hybrid Trial.

Hybrid	Grain color	Germination count: 24 h	Germination count: 48 h	Mold count	Malting loss (%)	Total loss (%)	Diastatic power (DU g^{-1})
SDSH 204	Creamy-white	98	98	1	15.0	23.8	29.2
SDSH 215	Creamy-white	99	100	1	12.2	16.1	22.2
SDSH 18	Creamy-white	93	93	2	12.9	17.8	15.8
SDSH 60	White	100	100	1	11.4	16.4	22.7
SDSH 157	Creamy-white	98	99	2	11.7	15.9	24.5
SDSH 164	Creamy-white	93	100	2	11.4	15.2	15.9
SDSH 208	White	93	94	0	14.8	21.4	24.3
SDSH 216	Creamy-yellow-white	93	97	1	12.3	18.1	25.0
SDSH 181	Creamy-white	98	99	1	12.0	17.5	27.3
SDSH 386	Red	99	99	0	13.0	20.3	33.9
SDSH 17	Creamy-yellow-white	92	98	0	13.7	20.3	27.1
SDSH 315	Creamy-white	92	94	2	14.5	21.6	45.5
SDSH 343	Creamy-white	89	90	1	12.3	16.2	26.0
SDSH 341	Creamy-yellow-white	89	95	2	11.9	15.0	29.2
ZWSH 1	Creamy-yellow-white	98	99	1	13.6	19.7	29.8
SDSH 195	Creamy-white	96	99	2	14.1	21.2	32.4
SDSH 90012	Brown	94	98	0	10.8	13.7	25.7
SDSH 90003	Brown	97	99	0	12.1	14.5	33.9
SDSH 90011	Brown	91	93	1	13.9	21.6	35.9
SDSH 90004	Brown	96	96	0	14.4	23.8	46.4
SDSH 90006	Brown	84	94	0	12.6	19.8	42.2
Controls							
PNR 8544	Creamy-white	96	98	3	15.1	25.8	39.1
DC 75	Brown	90	95	0	12.5	15.5	35.9
Mean		94.3	96.8	1.0	13.0	18.8	30.0

Table S6—Grain-quality evaluation of 25 entries and two controls in the 1992/93 season SMIP Sorghum Variety Trial.

Variety	Visual hardness score	Kernel weight (g 100^{-1})	Floaters (%)	Dehulling loss (%)	Milling yield (%)	Water absorption (%)	Size fraction: large[1]	Size fraction: medium[2]	Size fraction: small[3]	Reflectance value: dry	Reflectance value: wet	Tannin content (=%CE)
SDS 6013	4.9	2.56	15	11.3	86.2	5.7	0.1	99.9	0.0	73.3	53.2	0.0
SDSL 87019	4.5	2.48	42	20.3	76.8	8.2	22.2	77.7	0.1	74.0	56.6	0.0
SDSL 89519	4.5	2.08	60	15.9	81.7	6.2	3.2	96.6	0.2	68.2	47.6	0.5
SDSL 89546	4.3	2.57	53	12.9	84.7	8.4	35.0	64.9	0.1	72.4	54.3	0.0
SDSL 89511	4.0	2.40	47	15.5	81.9	4.2	7.0	93.0	0.1	56.7	33.8	0.2
SDSL 89566	4.0	3.48	66	10.2	87.2	8.4	86.5	13.5	0.0	71.2	52.6	0.0
SDSL 87013-2	3.9	2.52	47	19.0	79.2	8.9	2.5	97.3	0.2	75.9	57.9	0.0
SDS 2690-2	3.9	2.26	34	11.7	86.0	5.7	4.2	95.7	0.1	67.0	45.7	0.0
SDSL 87013-1	3.8	3.27	22	11.5	86.2	5.7	62.6	37.4	0.0	75.2	55.8	0.0
SDSL 89543	3.8	2.63	55	17.3	80.8	5.5	19.0	80.7	0.2	66.7	45.4	0.3
WSV 387	3.8	2.23	52	15.9	82.6	8.3	7.4	92.6	0.0	73.9	55.1	0.0
SDS 2298	3.7	2.86	26	12.3	85.5	6.1	57.0	43.0	0.0	75.0	55.9	0.0
SDSL 89555	3.7	2.71	67	13.9	83.9	7.8	19.9	80.0	0.0	69.3	50.7	0.0
SDSL 89429	3.6	2.73	81	11.5	86.2	6.2	44.8	55.1	0.1	72.3	53.5	0.0
SDSL 89475	3.6	2.96	82	20.7	77.1	9.8	8.6	91.3	0.1	66.0	44.1	0.2
SDSL 89405	3.3	2.39	89	21.2	76.7	7.5	27.1	72.7	0.3	72.6	54.2	0.0
SDSL 89569	3.3	2.53	85	17.5	80.2	7.7	41.1	58.8	0.0	72.8	54.5	0.0
SDSL 89404	3.1	2.48	95	27.5	70.8	6.6	15.6	84.3	0.1	54.8	30.6	0.0
SDSL 89544	3.1	2.69	83	16.0	81.4	5.7	15.7	84.2	0.0	71.5	51.0	0.0
SDSL 89491	2.6	2.72	97	32.6	65.8	5.8	37.2	62.7	0.1	67.5	46.1	0.3
SDSL 89472	2.5	2.69	99	31.9	67.0	4.5	13.6	86.4	0.0	60.6	37.2	0.2
SDSL 89467	2.3	2.57	98	27.6	68.5	4.6	10.7	89.2	0.0	65.7	43.5	0.2
SDSL 89503	2.2	2.60	98	30.6	67.5	4.7	10.4	89.6	0.1	66.6	45.1	0.3
Red Swazi	1.8	2.66	96	38.5	59.4	9.3	11.5	88.5	0.1	64.6	39.9	2.0
SDSL 89507	1.5	3.02	100	31.6	66.0	4.6	49.0	51.0	0.0	63.2	39.3	0.2
Controls												
SV 1	4.7	2.72	19	11.6	85.4	5.2	10.4	89.6	0.0	73.5	53.8	0.0
SV 2	3.6	2.64	30	27.0	70.4	7.8	10.3	89.6	0.1	75.2	57.3	0.0
SE ±	0.035	0.028	1.426	0.325	0.345	0.251	0.470	0.474	0.016	0.174	0.132	0.000
Mean	3.46	2.65	64.38	19.75	77.95	6.63	23.42	76.48	0.07	69.08	48.67	0.16
CV %	10.2	3.2	6.6	3.3	0.9	7.6	4.0	1.2	38.3	0.5	0.5	4.3

[1] % >4.0 mm. [2] % 4.0—2.6 mm. [3] % <2.6 mm.

Table S6m—Malting data for 25 entries and two controls in the 1992/93 season SMIP Sorghum Variety Trial.

Variety	Grain color	Germination count: 24 h	Germination count: 48 h	Mold count	Malting loss (%)	Total loss (%)	Diastatic power (DU g^{-1})
SDS 6013	Creamy-white	87	87	1	15.4	20.9	19.1
SDSL 87019	Yellowy-white	96	96	1	14.0	18.8	20.2
SDSL 89519	Red	78	81	1	16.0	19.9	30.2
SDSL 89546	Creamy-yellow-white	86	93	3	16.4	22.4	25.0
SDSL 89511	Red	67	82	1	16.1	21.4	33.8
SDSL 89566	Creamy-white	97	98	4	11.6	15.2	20.1
SDSL 87013-2	Creamy-white	48	55	3	13.2	18.0	14.4
SDS 2690-2	Yellowy-white, mottled	78	81	3	16.3	21.1	22.2
SDSL 87013-1	Creamy-white	95	96	0	12.0	13.9	14.1
SDSL 89543	Red	78	86	1	14.9	21.9	39.5
WSV 387	White	92	93	1	13.7	19.1	29.3
SDS 2298	Creamy-white	89	94	1	13.5	18.3	18.6
SDSL 89555	Creamy-white	84	88	1	14.3	17.0	19.4
SDSL 89429	White	65	83	2	15.2	19.6	27.5
SDSL 89475	Red	98	98	1	14.6	19.1	22.2
SDSL 89405	White	77	88	2	13.0	16.4	19.5
SDSL 89569	Creamy-white	90	93	1	14.9	20.1	28.0
SDSL 89404	White, mottled	27	43	5	16.5	18.6	12.1
SDSL 89544	Creamy-white	75	80	1	16.3	21.3	29.3
SDSL 89491	Red	54	69	4	13.8	17.0	21.8
SDSL 89472	Red	43	55	4	12.6	12.7	5.5
SDSL 89467	Red	52	74	1	13.7	17.5	22.9
SDSL 89503	Red	44	52	4	17.4	17.9	12.6
Red Swazi	Brown	92	92	1	14.1	21.2	37.4
SDSL 89507	Red	53	65	3	15.4	16.0	7.6
Controls							
SV 1	Yellowy-white	91	92	1	14.1	17.2	20.2
SV 2	Creamy-white	66	91	1	15.3	22.7	24.8
Mean		74.2	81.7	1.9	14.6	18.7	22.1

Table S7—Grain-quality evaluation of 27 entries and two controls in the 1992/93 season SMIP Sorghum New Line Trial.

Variety	Visual hardness score	Kernel weight (g 100⁻¹)	Floaters (%)	Dehulling loss (%)	Milling yield (%)	Water absorption (%)	Size fraction: large[1]	Size fraction: medium[2]	Size fraction: small[3]	Reflectance value: dry	Reflectance value: wet	Tannin content (≃%CE)
SDSL 90061	4.4	2.45	85	17.0	81.3	9.0	16.4	83.1	0.0	74.4	53.8	0.0
SDSL 90030	4.3	2.62	28	15.3	82.0	7.4	8.6	91.0	0.0	78.0	57.9	0.0
SDSL 90007	4.2	2.43	65	17.3	81.3	10.0	8.2	91.2	0.2	74.6	54.3	0.0
SDSL 90139	4.2	2.52	59	15.3	82.3	10.4	18.7	80.8	0.0	74.9	54.6	0.0
SDSL 90073	4.2	2.98	57	15.0	82.5	6.8	73.5	25.8	0.0	74.1	53.0	0.0
SDSL 90162	4.1	2.73	46	17.8	79.8	5.7	13.1	86.4	0.0	73.6	53.5	0.0
SDSL 90138	4.1	2.82	58	15.5	82.5	7.6	41.7	57.8	0.0	75.1	54.8	0.0
SDSL 90093	4.0	2.50	34	15.0	82.5	8.4	4.9	94.6	0.0	74.9	53.8	0.0
SDSL 90169	3.7	2.71	38	16.0	82.8	8.5	43.2	56.2	0.0	74.5	52.9	0.0
SDSL 90114	3.7	3.18	52	13.3	83.3	6.5	55.4	44.0	0.0	78.9	59.8	0.0
SDSL 90176	3.7	3.38	51	17.0	80.5	6.5	76.1	23.3	0.0	77.9	59.0	0.0
SDSL 90182	3.6	2.72	34	18.3	79.5	7.5	32.9	66.7	0.0	76.8	55.7	0.0
Segaolane B	3.6	2.34	34	13.5	83.8	5.4	5.7	94.0	0.0	75.1	53.4	0.0
SDSL 90152	3.6	2.14	67	14.0	82.5	8.7	10.2	89.4	0.1	76.5	57.8	0.0
SDSL 90115	3.4	2.53	53	15.8	82.3	7.4	16.5	82.9	0.1	75.4	57.3	0.0
SDSL 90097	3.4	2.33	67	18.5	79.0	10.3	8.5	90.9	0.2	77.2	57.7	0.0
SDSL 90173	3.3	2.99	32	14.0	83.8	7.4	54.0	45.5	0.0	77.0	55.8	0.0
SDSL 90143	3.2	2.17	75	17.0	82.0	8.3	8.4	91.2	0.1	73.8	52.7	0.0
SDSL 90181	3.1	2.43	61	19.0	78.3	5.4	15.2	84.1	0.1	73.5	53.2	0.0
SDSL 90177	3.1	4.01	91	15.3	81.8	9.6	95.4	4.6	0.0	77.6	58.9	0.0
SDSL 90167	3.1	3.01	31	14.3	82.8	7.3	59.5	39.9	0.0	74.9	53.7	0.0
Kuyuma	3.0	2.12	72	20.0	78.0	10.9	5.8	93.9	0.0	76.0	56.0	0.0
SDSL 90148	2.8	2.00	87	16.3	80.3	11.1	1.8	97.9	0.1	76.7	57.2	0.0
SDSL 90168	2.6	3.16	70	23.5	75.5	9.8	90.6	9.3	0.0	75.6	53.3	0.0
SDSL 90056	2.5	2.38	93	26.0	71.0	9.4	25.8	73.6	0.0	72.2	49.1	0.0
SDSL 90147	2.4	2.22	77	15.3	83.0	10.3	7.2	92.4	0.0	74.5	54.6	0.0
Red Swazi	1.4	2.35	99	51.3	46.3	9.9	17.6	82.1	0.1	69.9	43.9	1.5
Controls												
SV 1	3.8	2.20	57	18.8	78.5	9.0	3.2	96.2	0.2	76.0	55.4	0.0
SV 2	3.1	2.23	71	45.8	52.5	10.4	11.0	88.4	0.2	78.3	58.7	0.0
SE ±	0.036	0.042	1.617	0.301	0.307	0.158	0.413	0.389	0.000	0.104	0.089	0.065
Mean	3.41	2.61	60.08	18.98	78.66	8.45	28.59	70.93	0.06	75.43	54.88	0.05
CV%	10.6	4.9	8.1	3.2	0.8	3.8	2.9	1.1	24.5	0.3	0.3	0.0

[1] % >4.0 mm. [2] % 4.0—2.6 mm. [3] % <2.6 mm.

Table S7m—Malting data for 27 entries and two controls in the 1992/93 season SMIP Sorghum New Line Trial.

Variety	Grain color	Germination count: 24 h	Germination count: 48 h	Mold count	Malting loss (%)	Total loss (%)	Diastatic power (DU g^{-1})
SDSL 90061	Creamy-yellow-white	91	92	4	17.3	25.2	24.0
SDSL 90030	Creamy-white	91	94	2	13.9	18.4	18.9
SDSL 90007	Creamy-white	90	92	1	16.9	22.3	34.7
SDSL 90139	Creamy-white	92	95	1	16.3	24.5	30.6
SDSL 90073	Creamy-white	88	92	2	13.9	19.2	20.0
SDSL 90162	Creamy-white	86	86	2	16.6	25.1	32.3
SDSL 90138	Creamy-yellow-white	82	85	3	13.7	17.5	13.0
SDSL 90093	Creamy-white	94	96	1	16.2	26.0	34.4
SDSL 90169	Creamy-white, mottled	94	96	1	14.2	20.2	19.4
SDSL 90114	White	90	90	2	14.9	20.8	22.1
SDSL 90176	Creamy-yellow-white	78	80	3	12.9	16.1	14.0
SDSL 90182	Creamy-white, mottled	97	98	1	15.4	24.8	25.3
Segaolane B	Creamy-white, mottled	91	95	1	15.3	24.4	32.1
SDSL 90152	White	98	98	1	16.0	26.3	46.1
SDSL 90115	White	96	97	1	13.5	18.5	22.1
SDSL 90097	Creamy-white	94	95	2	14.7	24.1	20.3
SDSL 90173	Creamy-white, mottled	95	95	0	14.6	21.8	19.7
SDSL 90143	Creamy-white	79	98	0	17.0	27.9	39.5
SDSL 90181	Creamy-white	77	78	3	16.1	21.4	25.2
SDSL 90177	White	92	92	1	14.2	21.8	28.9
SDSL 90167	Creamy-white, mottled	88	91	1	12.5	16.2	11.8
Kuyuma	White	96	96	2	15.0	23.1	26.4
SDSL 90148	White	100	100	2	16.2	25.3	37.4
SDSL 90168	White, mottled	95	95	2	15.2	24.5	35.4
SDSL 90056	Creamy-yellow-white	77	81	4	18.1	24.4	12.7
SDSL 90147	White	98	98	1	15.2	22.1	21.2
Red Swazi	Brown	94	95	1	15.6	23.7	33.7
Controls							
SV 1	Creamy-white	96	97	1	14.1	20.6	31.4
SV 2	Creamy-white	85	96	4	16.6	27.0	22.5
Mean		90.5	92.9	1.7	15.3	22.5	26.0

Table S8—Grain-quality evaluation of 27 entries and two controls in the 1992/93 season SMIP Dwarf Wonder New Test Crosses Trial.

Cross	Visual hardness score	Kernel weight (g 100^{-1})	Floaters (%)	Dehulling loss (%)	Milling yield (%)	Water absorption (%)	Size fraction: large[1]	Size fraction: medium[2]	Size fraction: small[3]	Reflectance value: dry	Reflectance value: wet	Tannin content (≃%CE)
SPL 57A x DW4	1.6	1.87	68	21.0	77.5	11.1	0.9	98.6	0.2	60.6	34.9	2.0
SPL 32A x DW	1.6	2.02	68	27.5	71.2	8.4	1.4	98.2	0.1	61.3	36.1	2.0
SPL 9A x DW	1.5	1.67	78	19.0	79.4	10.4	0.3	98.5	0.7	57.3	31.3	1.0
SPL 177A x DW	1.5	2.31	81	22.5	75.2	8.9	12.3	87.5	0.0	60.5	35.2	2.0
CK 60A x DW	1.5	2.34	91	33.7	64.8	9.9	11.5	87.9	0.0	60.1	33.4	3.0
ATX 630 x DW	1.4	1.84	98	31.6	66.5	13.8	2.4	96.8	0.1	59.3	32.5	2.0
MA 4 x DW	1.4	1.87	90	29.6	68.8	8.5	3.7	96.0	0.2	57.9	31.1	1.5
CK 74A x DW	1.4	1.88	75	22.2	76.2	9.3	0.9	98.2	0.4	57.6	31.6	2.5
ICSA 21 x DW	1.4	1.95	93	30.6	67.9	13.2	3.3	96.0	0.1	58.2	31.4	3.0
ICSA 37 x DW	1.4	1.83	89	29.0	69.5	12.1	1.9	97.4	0.2	60.2	33.7	3.0
ICSA 12 x DW	1.3	2.06	85	25.5	72.8	11.3	3.4	96.2	0.1	60.9	33.6	3.0
A 8609 x DW	1.3	1.81	96	28.2	70.2	12.4	2.4	96.9	0.2	60.7	34.3	2.0
ATX 626 x DW	1.3	1.93	96	29.0	69.9	13.0	4.6	94.6	0.3	64.0	37.2	1.0
A 165 x DW	1.3	1.75	97	27.5	70.6	13.1	8.4	90.9	0.3	62.6	35.5	2.0
SPL 109A x DW	1.3	1.75	96	30.6	67.5	11.7	5.8	93.3	0.5	58.7	32.2	3.5
SPL 33A x DW	1.3	1.98	59	29.5	68.8	8.4	0.9	98.8	0.1	59.9	34.4	1.5
ATX 631 x DW	1.3	2.33	98	32.2	66.3	12.1	10.3	89.1	0.1	63.6	36.3	2.0
MA 6 x DW	1.2	1.86	98	44.0	54.9	11.1	4.1	95.4	0.1	62.9	36.3	2.5
D 2A x DW	1.2	1.91	96	32.2	65.9	11.8	4.6	95.0	0.1	58.2	31.4	3.5
ATX 628 x DW	1.2	1.86	92	27.4	70.2	11.9	4.2	95.1	0.4	55.7	30.5	2.5
ATX 623 x DW	1.2	1.77	99	27.3	70.9	12.8	2.0	97.6	0.2	59.2	33.7	2.5
ICSA 17 x DW	1.2	1.95	99	41.4	55.9	12.7	3.2	96.2	0.2	60.1	33.4	2.0
A 150 x DW	1.2	1.78	99	30.9	67.4	11.8	3.9	95.4	0.2	59.7	33.0	3.0
A 8603 x DW	1.2	1.99	100	37.4	60.8	12.3	7.7	91.6	0.3	60.2	33.1	2.0
A 145 x DW	1.2	2.09	96	27.3	70.8	10.7	11.2	87.9	0.1	58.5	32.5	2.5
A 160 x DW	1.1	1.99	94	28.1	70.4	9.9	12.1	87.5	0.0	59.5	32.9	3.0
A 8607 x DW	1.0	1.95	99	36.2	62.3	14.3	5.5	94.1	0.3	61.0	34.7	1.0
Controls												
PNR 8544	1.5	1.59	87	38.3	60.6	12.6	0.4	97.4	1.8	73.5	52.4	0.0
DC 75	1.1	1.85	99	33.4	65.3	11.5	3.9	95.5	0.3	57.7	30.5	2.0
SE ±	0.028	0.015	0.664	0.399	0.430	0.133	0.196	0.196	0.039	0.102	0.077	0.190
Mean	1.29	1.92	90.13	30.10	68.22	11.42	4.73	94.59	0.25	60.31	34.08	2.19
CV %	21.9	2.5	2.2	2.7	1.3	2.3	8.3	0.4	30.3	0.3	0.5	17.4

[1] % >4.0 mm. [2] % 4.0—2.6 mm. [3] % <2.6 mm.

Table S8m—Malting data for 27 entries and four controls in the 1992/93 season SMIP Dwarf Wonder New Test Crosses Trial.

Cross	Grain color	Germination count: 24 h	Germination count: 48 h	Mold count	Malting loss (%)	Total loss (%)	Diastatic power (DU g^{-1})
SPL 57A x DW	Light brown	90	96	0	14.0	21.8	50.6
SPL 32A x DW	Brown	80	92	0	13.9	21.6	50.1
SPL 9A x DW	Brown	93	98	0	14.3	25.9	46.3
SPL 117A x DW	Brown	90	96	0	13.0	23.2	41.4
CK 60A x DW	Reddish-brown	76	83	0	14.1	24.9	45.1
ATX 630 x DW	Reddish-brown	96	97	0	13.0	23.6	41.0
MA 4 x DW	Dark brown	80	95	0	12.7	23.8	47.7
CK 74A x DW	Brown	29	94	0	15.1	29.0	54.8
ICSA 21 x DW	Reddish-brown	68	91	0	14.4	25.4	51.0
ICSA 37 x DW	Brown	86	94	0	11.5	18.9	47.2
ICSA 12 x DW	Reddish-brown	86	97	0	13.0	21.8	49.9
A 8609 x DW	Brown	90	92	0	13.1	20.2	42.8
ATX 626 x DW	Dark brown	98	98	0	15.0	26.3	51.9
A 165 x DW	Dark brown	49	95	0	17.3	31.1	60.5
SPL 109A x DW	Brown	90	95	0	11.2	17.0	42.0
SPL 33A x DW	Dark brown	92	95	0	12.6	20.0	35.7
ATX 631 x DW	Light brown	80	89	0	15.4	25.3	48.5
MA 6 x DW	Brown	68	92	0	14.2	24.1	57.0
D 2A x DW	Brown	83	90	0	12.8	21.1	51.2
ATX 628 x DW	Dark brown	90	94	0	12.1	19.3	40.0
ATX 623 x DW	Reddish-brown	94	95	0	12.3	20.7	34.4
ICSA 17 x DW	Brown	65	83	0	14.3	21.2	60.8
A 150 x DW	Reddish-brown	0	83	0	15.7	30.0	53.4
A 8603 x DW	Dark brown	89	96	0	13.4	23.1	46.6
A 145 x DW	Light brown	64	91	0	16.0	28.8	46.3
A 160 x DW	Brown	88	91	0	13.2	21.5	40.6
A 8607 x DW	Light brown	76	91	0	11.5	15.5	35.6
Controls							
PNR 8544	Creamy-white	71	81	0	15.3	24.5	28.8
DC 75	Dark brown	76	95	0	14.6	26.4	54.5
Dwarf Wonder	Brown	94	96	1	15.4	27.2	60.3
Red Swazi	Reddish-brown	96	96	3	15.3	27.0	61.4
Mean		78.3	92.6	0.1	13.9	23.6	47.7

Table S9—Grain-quality evaluation of 48 entries and three controls in the 1992/93 season SMIP Sorghum Preliminary Hybrid Trial.

Hybrid	Visual hardness score	Kernel weight (g 100^{-1})	Floaters (%)	Dehulling loss (%)	Milling yield (%)	Water absorption (%)	Size fraction: large[1]	Size fraction: medium[2]	Size fraction: small[3]	Reflectance value: dry	Reflectance value: wet	Tannin content (≈%CE)
AX8 1606 x SDS 238	4.1	3.12	23	17.0	80.6	8.2	55.5	44.8	0.0	77.1	57.4	0.0
ICSA 20 x SDS 348	4.0	2.32	26	16.0	81.7	8.2	9.8	89.5	0.2	72.1	48.3	0.0
AX8 836 x SDS 3880	4.0	2.68	45	15.2	81.9	7.8	19.2	79.8	0.1	79.4	59.8	0.0
SPL 38A x SDS 2688	4.0	2.45	19	18.1	79.3	6.1	15.6	84.3	0.1	78.7	59.4	0.0
SPL 38A x SDS 260	4.0	2.00	11	16.0	81.5	5.5	0.5	98.0	0.6	74.5	52.6	0.0
SPL 33A x SDS 348	4.0	1.82	48	31.9	66.4	9.7	2.3	94.8	1.8	76.2	56.6	0.0
AX8 1356 x K 1593	4.0	2.63	33	20.6	77.5	7.0	31.9	67.9	0.2	75.4	55.8	0.0
ICSA 21 x SDS 297	3.9	3.18	17	14.8	82.7	5.6	69.9	29.9	0.0	75.4	55.8	0.0
SPL 38A x SDS 348	3.9	2.06	25	18.5	79.1	6.6	11.6	88.0	0.4	75.3	54.8	0.0
AX8 1606 x SDS 2688	3.9	2.76	35	21.5	77.0	7.6	33.6	66.0	0.1	79.2	59.8	0.0
AX8 1604 x SDS 3880	3.9	2.62	38	19.3	78.4	9.0	29.2	70.5	0.1	76.3	55.2	0.0
AX8 2578 x SDS 3880	3.8	3.43	32	15.5	82.5	5.0	71.6	28.4	0.0	73.7	54.7	0.0
ICSA 21 x SDS 2688	3.8	2.28	48	18.2	79.5	8.4	22.8	76.7	0.1	76.6	56.2	0.0
SPL 32A x SDS 348	3.8	2.19	14	17.3	81.0	5.3	0.4	98.7	0.5	72.0	49.8	0.0
AX8 356 x SDS 170	3.8	2.61	35	17.2	80.2	4.9	39.2	60.1	0.1	76.1	55.3	0.0
AX8 1606 x MR 849	3.8	2.37	27	19.5	78.4	9.4	12.8	86.9	0.0	78.8	58.7	0.0
AX8 347 x MR 849	3.8	2.37	40	21.8	76.0	8.6	15.1	83.0	0.0	78.9	58.5	0.0
AX8 347 x SDS 238	3.8	3.58	32	17.4	80.0	7.4	79.1	20.4	0.0	78.7	59.0	0.0
AX8 1606 x SDS 1350	3.7	3.45	25	18.7	79.5	5.7	67.7	31.5	0.0	74.9	54.6	0.0
AX8 831 x SDS 2690	3.7	2.83	27	16.7	80.9	5.2	35.2	63.2	0.1	77.0	58.0	0.0
AX8 831 x K 1593	3.7	2.96	15	18.7	79.0	5.0	44.1	55.0	0.1	74.9	54.3	0.0
AX8 356 x SDS 1350	3.6	2.94	33	18.8	78.5	6.5	56.2	43.2	0.0	76.9	56.3	0.0
SPL 109A x SDS 3880	3.6	3.74	46	15.0	82.2	7.1	79.8	19.9	0.0	76.3	55.5	0.0
AX8 346 x SDS 3880	3.6	3.88	27	17.8	79.8	3.7	93.0	6.9	0.0	75.5	56.2	0.0
ATX 623 x SDS 297	3.6	2.52	45	25.2	72.8	4.3	30.6	69.2	0.1	75.1	54.7	0.0
AX8 830 x MR 813	3.6	2.30	16	20.4	77.8	7.5	5.6	94.1	0.0	76.4	56.4	0.0
AX8 1604 x K 1593	3.6	2.96	20	23.4	74.6	5.5	36.9	62.8	0.2	77.9	57.6	0.0
ICSA 20 x SDS 260	3.5	1.90	34	22.3	75.9	8.8	3.1	96.1	0.2	75.1	53.3	0.0
AX8 836 x SDS 1053	3.5	3.32	36	18.8	77.7	6.7	58.8	41.5	0.1	74.9	52.8	0.0

Table S9—(continued).

Hybrid	Visual hardness score	Kernel weight (g 100^{-1})	Floaters (%)	Dehulling loss (%)	Milling yield (%)	Water absorption (%)	Size fraction: large[1]	Size fraction: medium[2]	Size fraction: small[3]	Reflectance value: dry	Reflectance value: wet	Tannin content (≈%CE)
AX8 347 x MR 836	3.5	3.32	23	23.5	74.9	7.8	62.0	37.3	0.0	78.4	59.5	0.0
AX8 832 x SDS 2690	3.4	2.72	28	19.8	77.7	6.7	22.9	76.4	0.0	75.9	56.9	0.0
AX8 832 x SDS 189	3.3	2.64	52	26.6	71.1	6.1	26.1	72.7	0.1	76.4	55.8	0.0
AX8 837 x SDS 2690	3.3	3.27	31	20.0	78.3	6.9	41.4	58.3	0.0	76.6	58.0	0.0
SPL 177A x SDS 297	3.3	2.16	42	26.2	72.0	8.7	12.3	87.5	0.1	78.1	59.3	0.0
SPL 33A x SDS 297	3.3	2.73	23	25.1	73.2	8.5	24.1	75.1	0.0	76.5	56.7	0.0
AX8 356 x SDS 2688	3.3	2.48	43	24.2	73.8	11.0	33.6	66.1	0.1	77.5	58.5	0.0
AX8 2580 x SDS 1053	3.2	3.25	32	22.9	74.2	3.4	52.0	48.2	0.0	73.8	53.5	0.0
SPL 33A x SDS 2688	3.2	2.44	22	29.3	68.9	7.8	7.4	92.5	0.0	79.1	60.5	0.0
SPL 109A x SDS 297	3.1	1.88	64	27.0	71.2	7.2	9.4	90.2	0.4	76.0	56.9	0.0
AX8 346 x K 1593	3.0	2.51	34	27.4	70.2	7.2	27.7	71.7	0.6	75.8	56.3	0.0
AX8 831 x SDS 1053	2.9	3.23	33	27.6	70.4	4.2	49.7	50.3	0.1	74.4	53.3	0.0
AX8 349 x SDS 238	2.8	3.52	41	28.4	69.8	8.0	75.0	24.3	0.1	78.3	59.0	0.0
SPL 10A x SDS 513	2.7	1.74	53	25.8	72.8	7.9	0.8	98.4	0.8	70.8	49.2	0.0
AX8 832 x SDS 1053	2.5	2.37	42	20.6	77.2	6.9	10.9	89.0	0.2	77.8	58.0	0.0
A 155 x SDS 2688	2.5	2.70	47	22.4	75.4	7.2	32.2	67.1	0.0	76.8	58.4	0.0
ATX 626 x SDS 297	2.4	2.60	56	31.0	67.5	9.6	22.5	77.1	0.3	75.0	53.6	0.2
SPL 33A x SDS 513	2.4	1.90	58	42.4	56.2	8.7	1.2	95.1	1.0	76.4	55.0	0.0
A2 8601 x SDS 513	2.3	2.11	44	27.6	70.1	5.9	4.6	94.9	0.2	74.2	52.5	0.0
Controls												
ZWSH 1	3.7	1.91	88	37.6	60.4	13.7	10.7	88.8	0.5	74.9	54.7	0.0
PNR 8544	2.8	1.88	66	27.1	70.5	9.5	23.3	75.9	0.1	75.9	55.3	0.0
DC 75	1.1	1.78	99	36.7	61.1	12.0	5.6	94.1	0.3	59.5	30.5	3.5
SE±	0.043	0.024	1.358	0.371	0.407	0.213	0.445	0.409	0.032	0.227	0.133	0.050
Mean	3.38	2.64	37.12	22.56	75.27	7.28	31.10	68.29	0.20	75.81	55.44	0.07
CV%	12.8	2.8	11.0	3.3	1.1	5.9	2.9	1.2	30.5	0.6	0.5	136.5

[1] % >4.0 mm. [2] % 4.0—2.6 mm. [3] % <2.6 mm.

Table S9m—Malting data for 48 entries and three controls in the 1992/93 season SMIP Sorghum Preliminary Hybrid Trial.

Hybrid	Grain color	Germination count: 24 h	Germination count: 48 h	Mold count	Malting loss (%)	Total loss (%)	Diastatic power (DU g^{-1})
AX8 1606 x SDS 238	Creamy-white	70	85	1	13.9	19.4	29.9
ICSA 20 x SDS 348	Creamy-white	87	89	3	18.0	30.2	48.4
AX8 836 x SDS 3880	Creamy-white	85	93	2	68.0	26.8	52.0
SPL 38A x SDS 2688	Creamy-yellow-white	96	98	1	14.4	22.7	35.5
SPL 38A x SDS 260	Creamy-yellow-white	95	97	1	16.9	29.1	54.9
SPL 33A x SDS 348	Creamy-white	94	97	1	16.5	28.1	47.7
AX8 1356 x K 1593	Creamy-white	80	87	2	17.1	26.7	32.4
ICSA 21 x SDS 297	Creamy-white	85	92	2	14.2	20.9	25.8
SPL 38A x SDS 348	Creamy-yellow-white	90	94	3	16.4	27.4	38.2
AX8 1606 x SDS 2688	White	88	94	3	14.9	24.3	52.0
AX8 1604 x SDS 3880	Creamy-white, mottled	90	93	2	13.0	19.3	31.1
AX8 2578 x SDS 3880	Creamy-white	77	90	2	15.6	22.3	27.7
ICSA 21 x SDS 2688	Creamy-white	70	81	4	16.9	28.9	57.0
SPL 32A x SDS 348	Creamy-white	87	92	2	18.3	30.4	32.4
AX8 356 x SDS 170	Creamy-white	83	87	2	17.3	28.5	36.5
AX8 1606 x MR 849	Creamy-white	91	94	2	16.7	29.1	59.2
AX8 347 x MR 849	Creamy-white	90	94	1	17.1	30.1	53.4
AX8 347 x SDS 238	Creamy-white	66	73	2	15.4	23.9	22.7
AX8 1606 x SDS 1350	Creamy-yellow-white	83	90	1	14.4	22.0	42.5
AX8 831 x SDS 2690	Creamy-white	79	84	2	15.8	24.7	28.6
AX8 831 x K 1593	Creamy-white	78	89	3	15.4	25.7	37.8
AX8 356 x SDS 1350	Creamy-white	83	89	1	17.3	27.7	45.2
SPL 109A x SDS 3880	Creamy-white	74	91	2	15.6	23.9	36.7
AX8 346 x SDS 3880	Creamy-white	61	64	2	16.3	22.2	19.3
ATX 623 x SDS 297	White, mottled	93	95	1	15.5	26.5	37.6
AX8 830 x MR 813	Creamy-white	90	96	3	14.9	23.5	36.0
AX8 1604 x K 1593	Creamy-yellow-white	77	88	1	14.6	22.9	30.1
ICSA 20 x SDS 260	Creamy-white	91	98	1	15.7	26.3	48.4
AX8 836 x SDS 1053	Yellowy-reddish-white, mottled	67	81	2	13.9	22.4	31.4
AX8 347 x MR 836	Creamy-white	75	90	2	15.9	24.7	30.8
AX8 832 x SDS 2690	Creamy-white	80	86	1	16.2	23.9	34.7

Table S9m—Malting data for 48 entries and three controls in the 1992/93 season SMIP Sorghum Preliminary Hybrid Trial (continued).

Hybrid	Grain color	Germination count: 24 h	Germination count: 48 h	Mold count	Malting loss (%)	Total loss (%)	Diastatic power (DU g^{-1})
AX8 832 x SDS 189	Creamy-yellow-white	70	85	2	14.6	22.6	37.8
AX8 837 x SDS 2690	Creamy-white	63	66	2	16.5	23.3	23.5
SPL 177A x SDS 297	Creamy-white	96	97	2	17.0	28.8	50.9
SPL 33A x SDS 297	Creamy-white	91	96	1	16.3	25.9	31.6
AX8 356 x SDS 2688	White	82	88	3	16.3	27.9	43.7
AX8 2580 x SDS 1053	Creamy-yellow-white	66	88	3	15.7	24.9	33.6
SPL 33A x SDS 2688	Creamy-white	92	95	3	16.8	27.1	34.4
SPL 109A x SDS 297	Creamy-white	89	92	2	15.2	24.1	43.3
AX8 346 x K 1593	Creamy-yellow-white	81	88	2	16.3	27.4	44.5
AX8 831 x SDS 1053	Creamy-yellow-white	68	88	2	14.7	22.9	30.0
AX8 349 x SDS 238	White	78	85	2	14.7	23.3	26.8
SPL 10A x SDS 513	Creamy-yellow-white	93	96	3	18.6	31.3	47.4
AX8 832 x SDS 1053	Creamy-yellow-white	94	98	2	17.0	30.3	54.3
A 155 x SDS 2688	Creamy-white	86	96	2	15.5	23.0	42.7
ATX 626 x SDS 297	Red	96	97	0	15.1	25.4	44.7
SPL 33A x SDS 513	Creamy-yellow-white	91	96	3	19.5	34.1	43.1
A2 8601 x SDS 513	Creamy-yellow-white	76	92	2	18.5	29.5	37.7
Controls							
ZWSH 1	Creamy-white, mottled	87	95	2	19.6	35.4	47.0
PNR 8544	Creamy-white	86	89	3	18.0	29.7	29.1
DC 75	Brown	92	93	1	17.3	33.9	61.0
Mean		83.0	90.0	2.0	17.2	26.2	39.3

Table S10—Grain-quality evaluation of 23 entries and two controls in the 1992/93 season SMIP Sorghum Restorer Trial.

Line	Visual hardness score	Kernel weight (g 100^{-1})	Floaters (%)	Dehulling loss (%)	Milling yield (%)	Water absorption (%)	Size fraction: large[1]	Size fraction: medium[2]	Size fraction: small[3]	Reflectance value: dry	Reflectance value: wet	Tannin content (≃%CE)
SDSR 91043	4.2	2.30	88	27.6	71.1	12.2	13.4	85.0	0.3	68.9	43.5	0.0
SDSR 91007	4.1	1.25	95	26.5	71.2	10.5	2.2	96.2	1.3	75.9	55.3	0.0
SDSR 91038	4.0	1.50	53	16.6	81.0	10.1	0.0	98.2	0.6	68.6	45.9	0.0
SDSR 91056	4.0	1.47	75	18.6	78.7	8.2	2.3	96.6	0.5	73.0	52.0	0.0
SDSR 91012	3.8	1.25	82	20.9	77.5	9.0	0.6	97.7	1.5	70.9	49.2	0.0
SDSR 91044	3.7	1.74	75	26.9	71.4	13.7	0.8	96.4	2.3	69.3	45.4	0.0
SDSR 91001	3.7	1.52	93	23.8	74.3	9.9	1.6	95.6	2.1	61.0	35.3	0.2
SDSR 91050	3.7	1.95	27	17.4	81.1	7.3	0.4	98.2	0.7	67.4	42.0	0.2
SDSR 91055	3.6	2.21	19	14.8	82.1	5.8	3.1	96.6	0.2	73.2	51.3	0.0
SDSR 91051	3.6	1.92	27	17.5	81.1	7.3	0.1	98.8	0.3	67.6	42.6	0.2
SDSR 91014	3.5	2.15	73	22.8	75.4	5.8	3.6	95.1	0.6	61.6	36.2	0.2
SDSR 91006	3.5	1.44	78	21.6	77.0	8.8	1.0	97.5	1.1	74.3	53.2	0.0
SDSR 91036	3.5	1.93	46	18.8	78.9	8.6	3.6	95.4	0.1	69.3	46.8	0.0
SDSR 91054	3.5	1.66	83	23.0	75.0	9.5	3.1	95.8	0.6	72.1	51.7	0.0
SDSR 91045	3.4	1.53	94	28.4	69.4	15.1	0.8	95.0	3.3	65.9	40.3	0.0
SDSR 91052	3.2	1.44	76	22.1	75.3	10.0	2.6	96.4	0.7	73.1	51.6	0.0
SDSR 91013	3.2	1.74	85	20.5	77.5	7.9	2.0	96.5	1.3	63.4	38.1	0.2
SDSR 91003	3.2	1.83	87	24.4	73.9	6.9	1.5	96.4	1.9	57.6	31.1	0.2
SDSR 91004	3.1	1.42	66	28.7	69.0	9.6	0.7	97.1	1.3	75.4	53.9	0.0
SDSR 91049	3.0	1.65	68	22.3	75.6	8.6	4.5	94.3	0.4	73.6	53.0	0.0
SDSR 91011	2.8	1.39	78	24.2	73.8	8.2	0.4	98.3	1.0	72.9	51.2	0.0
SDSR 91015	2.8	1.76	82	21.7	76.4	8.1	2.2	96.7	0.9	62.6	36.8	0.2
SDSR 91002	2.7	2.42	91	25.8	72.5	6.9	7.6	91.2	0.4	60.1	33.6	0.2
Controls												
SPL 28R	2.9	2.10	72	17.3	79.7	10.4	2.6	96.4	0.4	77.2	57.4	0.0
R 8602	1.3	1.66	100	33.9	62.5	13.6	2.6	96.4	0.4	62.1	35.1	3.0
SE ±	0.052	0.058	1.246	0.315	0.357	0.160	0.247	0.243	0.069	0.196	0.117	0.000
Mean	3.33	1.73	72.44	22.63	75.24	9.28	2.52	95.91	0.96	68.66	45.27	0.19
CV %	15.5	3.2	5.2	2.8	1.0	3.5	19.6	0.5	14.2	0.6	0.5	3.8

1% >4.0 mm. 2% 4.0—2.6 mm. 3% <2.6 mm.

Table S10m—Malting data for 23 entries and two controls in the 1992/93 season SMIP Sorghum Restorer Trial.

Line	Grain color	Germination count: 24 h	Germination count: 48 h	Mold count	Malting loss (%)	Total loss (%)	Diastatic power (DU g^{-1})
SDSR 91043	Creamy-yellow-white, mottled	24	36	4	16.1	18.6	8.9
SDSR 91007	Yellowy-white	82	84	0	18.9	26.2	24.7
SDSR 91038	Creamy-white, mottled	96	99	2	17.5	28.7	41.2
SDSR 91056	Creamy-white	84	95	4	19.6	30.1	32.7
SDSR 91012	Creamy-white	74	77	3	18.8	26.8	18.0
SDSR 91044	Creamy-yellow-white	83	88	3	15.7	21.0	25.0
SDSR 91001	Red	85	86	1	14.9	22.0	37.6
SDSR 91050	Red	92	97	1	15.2	24.2	34.0
SDSR 91055	White	79	99	2	14.6	21.8	48.2
SDSR 91051	Red	87	97	1	14.4	22.1	32.6
SDSR 91014	Red	66	70	1	14.6	28.6	15.3
SDSR 91006	Creamy-white	70	87	3	18.8	28.3	28.6
SDSR 91036	Creamy-white, mottled	86	88	5	15.2	22.8	12.7
SDSR 91054	Creamy-white	79	88	4	19.9	28.9	24.2
SDSR 91045	Creamy-yellow-white	82	91	2	16.4	22.6	24.8
SDSR 91052	Creamy-white	86	91	4	19.0	28.7	41.5
SDSR 91013	Red	87	89	2	16.6	25.2	43.6
SDSR 91003	Red	46	65	3	16.2	22.5	31.9
SDSR 91004	Creamy-white	92	94	3	19.3	28.0	12.1
SDSR 91049	Creamy-white	95	97	1	15.6	22.3	29.3
SDSR 91011	Yellowy-white	86	86	3	17.6	22.6	26.2
SDSR 91015	Red	71	72	4	18.1	25.9	41.2
SDSR 91002	Red	81	85	5	11.8	14.1	30.2
Controls							
SPL 28R	White	96	98	2	12.7	18.3	28.7
R 8602	Brown	89	98	0	16.5	19.3	49.2
Mean		79.9	86.3	2.5	16.6	24.0	29.7

Table S11—Grain-quality evaluation of 13 entries and two controls in the 1992/93 season SMIP Pioneer Overseas Corporation Trial.

Hybrid	Visual hardness score	Kernel weight (g 100^{-1})	Floaters (%)	Dehulling loss (%)	Milling yield (%)	Water absorption (%)	Size fraction: large[1]	Size fraction: medium[2]	Size fraction: small[3]	Reflectance value: dry	Reflectance value: wet	Tannin content (≃%CE)
SDSH 148	4.2	2.53	24	13.3	84.1	7.5	9.8	89.7	0.5	67.8	46.6	0.0
8320-H	3.9	1.77	45	15.7	81.9	6.5	1.0	98.5	0.4	75.6	56.4	0.0
SDSH 19	3.7	1.74	56	13.4	84.0	10.0	3.0	96.8	0.1	74.5	54.0	0.0
8505-H	3.5	2.00	37	12.9	84.5	5.2	1.7	98.0	0.3	65.0	40.8	0.2
8500-H	3.4	2.46	43	14.7	82.8	5.6	4.2	95.7	0.1	63.9	39.8	0.3
8601-H	3.4	2.12	61	11.7	85.4	8.0	9.9	90.0	0.1	66.4	41.7	0.5
8319-H	3.1	1.88	63	13.1	84.1	10.0	2.7	96.5	0.8	66.7	44.6	0.0
8171-H	2.7	1.97	94	16.6	80.5	9.6	1.6	98.2	0.2	50.5	23.9	2.0
8262-H	2.6	2.38	92	16.7	80.6	10.2	18.2	81.8	0.0	55.8	29.6	2.0
SDSH 376	1.8	2.34	99	29.7	67.8	11.6	31.6	68.3	0.1	60.6	33.3	3.0
SDSH 378	1.6	1.79	93	31.4	66.3	10.7	1.9	97.9	0.2	59.9	32.5	3.5
SDSH 409	1.4	2.08	97	36.5	60.6	8.0	19.0	81.0	0.1	60.7	33.7	2.0
8172-H	1.1	1.68	100	42.0	55.8	11.0	0.6	99.0	0.2	57.0	30.7	2.0
Controls												
SDSH 48	4.5	2.37	37	11.6	86.1	9.2	14.1	85.8	0.1	73.7	53.7	0.0
DC 75	1.1	1.57	100	32.0	65.3	11.9	0.3	98.9	0.9	56.9	28.7	3.0
SE ±	0.034	0.024	0.995	0.255	0.268	0.065	0.276	0.282	0.022	0.113	0.087	0.091
Mean	2.78	2.04	69.42	20.73	76.64	9.00	7.96	91.74	0.27	63.64	39.32	1.23
CV %	12.2	3.5	4.3	2.5	0.7	1.5	6.9	0.6	15.1	0.4	0.4	14.8

[1] % >4.0 mm. [2] % 4.0—2.6 mm. [3] % <2.6 mm.

Table S11m—Malting data for 13 entries and two controls in the SMIP Pioneer Overseas Corporation Trial.

Hybrid	Grain color	Germination count: 24 h	Germination count: 48 h	Mold count	Malting loss (%)	Total loss (%)	Diastatic power (DU g^{-1})
SDSH 148	White	98	99	0	15.0	23.5	34.1
8320-H	White	91	98	2	13.5	18.0	35.7
SDSH 19	White	97	99	2	13.8	21.0	38.0
8505-H	Red	92	96	2	14.6	22.9	43.7
8500-H	Red	93	97	1	16.1	26.3	44.3
8601-H	Red	93	94	2	11.2	14.2	29.6
8319-H	White	80	83	2	12.3	17.8	21.2
8171-H	Brown	77	83	1	12.5	16.5	31.5
8262-H	Brown	97	99	0	12.7	20.4	38.5
SDSH 376	Brown	91	96	1	15.2	25.8	53.2
SDSH 378	Brown	83	86	0	13.6	20.0	43.8
SDSH 409	Brown	88	93	0	16.2	25.3	44.7
8172-H	Brown	66	79	1	13.4	18.6	29.3
Controls							
SDSH 48	White	93	96	1	12.9	18.3	32.8
DC 75	Brown	81	85	0	14.3	23.6	50.3
Mean		88.0	92.2	1.0	13.8	20.8	37.9

Table S12—Grain-quality evaluation of 10 entries in the 1992/93 season SMIP Purdue Sorghums Trial.

Cultivar	Visual hardness score	Kernel weight (g 100^{-1})	Floaters (%)	Dehulling loss (%)	Milling yield (%)	Water absorption (%)	Size fraction: large[1]	Size fraction: medium[2]	Size fraction: small[3]	Reflectance value: dry	Reflectance value: wet
P 89002	4.0	2.85	34	12.5	84.8	6.3	19.0	80.9	0.0	71.5	50.1
P 89006	3.7	1.80	49	26.3	71.6	7.0	0.3	97.2	2.4	70.8	49.8
P 89005	3.6	1.76	75	17.2	80.0	9.2	0.8	98.1	1.0	68.8	48.1
P 89004	3.6	1.98	54	17.5	80.1	10.3	1.1	98.2	0.7	67.8	46.8
P 89007	3.5	2.00	74	16.9	81.3	8.6	3.7	95.4	0.8	72.7	53.5
P 89001	3.5	2.40	35	13.5	84.5	9.9	14.1	85.8	0.0	73.4	54.2
P 89003	3.3	1.30	91	24.8	73.1	11.8	0.0	94.8	5.0	67.5	46.2
P 89008	2.8	1.90	95	41.5	56.8	13.2	1.0	98.2	0.7	67.3	45.3
P 89009	2.7	1.66	96	25.9	71.9	9.2	0.4	98.2	1.2	70.6	50.1
P 89010	2.7	1.96	70	33.2	65.3	9.8	1.6	98.1	0.2	72.1	50.9
SE ±	0.022	0.018	1.455	0.202	0.385	0.186	0.110	0.118	0.074	0.248	0.133
Mean	3.33	1.96	67.33	22.92	74.92	9.53	4.21	94.50	1.19	70.22	49.49
CV %	6.5	2.7	6.5	1.8	1.0	3.9	5.2	0.3	12.4	0.7	0.5

[1] % >4.0 mm. [2] % 4.0—2.6 mm. [3] % <2.6 mm.

Table S12m—Malting data for 10 entries in the 1992/93 season SMIP Purdue Sorghums Trial.

Cultivar	Grain color	Germination count: 24 h	Germination count: 48 h	Mold count	Malting loss (%)	Total loss (%)	Diastatic power (DU g^{-1})
P 89002	Creamy-white, mottled	97	98	3	14.2	20.8	27.4
P 89006	Creamy-white	93	95	3	14.3	20.8	36.6
P 89005	Creamy-yellow-white	81	84	4	23.2	26.3	43.1
P 89004	Creamy-yellow-white, mottled	69	74	4	17.8	25.7	28.1
P 89007	Creamy-yellow-white	84	87	2	17.8	26.9	32.6
P 89001	Creamy-white	87	88	2	14.6	20.7	17.9
P 89003	Creamy-yellow-white	64	65	4	19.1	27.3	22.6
P 89008	Yellowy-white	71	72	5	19.0	28.2	33.8
P 89009	Yellowy-white	87	90	3	19.8	32.1	63.1
P 89010	Creamy-white	94	95	2	18.8	31.5	58.8
Mean		82.7	84.8	3.2	17.9	26.0	36.4

Table S13—Grain-quality evaluation of 12 entries in the 1992/93 season Characterization of Sorghum Test Locations and Environments Trial.

Cultivar	Visual hardness score	Kernel weight (g 100^{-1})	Floaters (%)	Dehulling loss (%)	Milling yield (%)	Water absorption (%)	Size fraction: large[1]	Size fraction: medium[2]	Size fraction: small[3]	Reflectance value: dry	Reflectance value: wet	Tannin content (≃%CE)
ICSV 112	4.2	2.51	40	10.4	87.0	7.4	14.7	85.3	0.0	72.6	52.2	0.0
E 35-1	4.0	3.36	52	11.6	86.0	5.3	87.7	12.2	0.0	72.2	51.7	0.0
IS 3693	4.0	4.13	54	14.9	81.3	4.0	91.3	8.6	0.1	71.9	50.1	0.2
ISIAP Dorado	3.9	3.17	57	14.5	83.1	8.7	74.9	25.0	0.0	73.6	53.3	0.0
CSH I	3.8	3.48	43	14.5	83.1	5.9	65.5	34.5	0.0	65.1	41.2	0.0
CSH II	3.7	2.73	81	13.2	84.5	5.5	35.5	64.4	0.0	72.5	51.4	0.0
IS 2284	3.6	2.94	23	11.5	85.7	7.3	61.6	38.4	0.0	76.6	58.1	0.0
IRAT 204	3.2	3.07	42	20.6	77.2	7.6	29.6	70.2	0.1	76.2	56.3	0.0
Seredo	2.6	2.54	100	25.3	72.4	14.0	19.9	80.0	0.0	54.6	28.7	1.0
S 35	1.9	2.37	100	22.0	75.9	12.7	15.8	84.1	0.1	63.2	35.8	0.5
Naga White	1.4	2.81	99	33.5	64.4	12.5	43.5	56.2	0.1	64.9	38.7	0.5
Framida	1.2	3.33	100	31.8	65.8	9.3	88.4	11.5	0.0	63.5	37.8	1.5
SE ±	0.033	0.030	1.313	0.326	0.362	0.155	0.275	0.273	0.000	0.106	0.102	0.102
Mean	3.10	3.04	65.92	18.64	78.85	8.35	52.36	47.52	0.05	68.88	46.25	0.31
CV %	10.8	2.9	6.0	3.5	0.9	3.7	1.1	1.2	35.9	0.3	0.4	66.2

[1] % >4.0 mm. [2] % 4.0—2.6 mm. [3] % <2.6 mm.

Table S13m—Malting data for 12 entries in the 1992/93 season Characterization of Sorghum Test Locations and Environments Trial.

Cultivar	Grain color	Germination count: 24 h	Germination count: 48 h	Mold count	Malting loss (%)	Total loss (%)	Diastatic power (DU g^{-1})
ICSV 112	White	94	95	1	16.1	25.9	31.3
E 35-1	Creamy-white	83	85	3	16.1	23.5	31.0
IS 3693 (SDS 1594)	Red	87	93	3	14.8	23.3	50.0
ISIAP Dorado	Creamy-white	87	88	5	16.0	23.4	25.7
CSH I	Creamy-yellow-white	66	91	5	14.5	22.0	22.2
CSH II	Yellowy-white	89	91	5	16.7	25.1	31.8
IS 2284	Creamy-white	96	98	1	15.3	24.7	29.7
IRAT 204	Creamy-white	92	94	4	15.0	21.5	10.1
Seredo	Brown	79	83	3	16.1	24.7	20.7
S 35	Gray	98	99	3	16.0	26.0	36.2
Naga White	Gray	93	94	5	15.1	23.7	33.9
Framida	Brown	97	98	2	14.5	23.0	42.3
Mean		88.4	92.4	3.3	15.5	23.9	30.4

Table S14—Grain-quality evaluation of 24 enties and three controls in the 1992/93 season International Sorghum Variety and Hybrid Adaptation Trial.

Cultivar	Visual hardness score	Kernel weight (g 100^{-1})	Floaters (%)	Dehulling loss (%)	Milling yield (%)	Water absorption (%)	Size fraction: large[1]	Size fraction: medium[2]	Size fraction: small[3]	Reflectance value: dry	Reflectance value: wet
5 DX 160	4.4	3.48	40	16.2	82.1	10.9	65.9	33.7	0.0	78.7	61.2
ICSH 871001	4.2	3.72	29	14.8	83.3	6.5	84.9	14.8	0.0	77.2	57.2
KAT 83369	4.2	2.40	52	15.5	83.2	7.8	23.7	76.2	0.0	75.4	54.9
IS 23496	4.2	2.44	37	15.9	81.7	9.3	27.2	72.0	0.0	73.5	53.6
ICSH 90002	4.2	2.77	18	13.7	83.0	8.0	25.2	74.7	0.1	73.3	54.3
SPH 468	4.2	2.86	35	13.2	84.0	8.2	41.2	58.8	0.0	76.8	57.9
ICSV 89102	4.2	2.30	48	17.1	80.5	14.2	6.4	93.5	0.0	76.5	57.5
ICSH 89123	4.0	2.29	41	18.3	80.3	6.8	11.3	88.6	0.1	77.9	57.6
IS 9302	4.0	2.08	28	42.9	56.0	11.8	0.4	99.0	0.2	79.0	60.1
IS 8193	3.9	3.13	13	19.0	78.7	9.4	76.4	23.6	0.0	77.7	60.2
ICSH 89034	3.8	2.40	29	17.5	80.0	8.8	11.9	87.6	0.1	78.0	58.3
ICSV 111	3.8	2.87	38	14.2	84.3	6.2	40.5	58.9	0.0	75.5	55.8
SPV 669	3.8	2.78	22	15.9	81.9	8.2	29.7	70.1	0.0	72.9	52.7
ICSH 89020	3.7	2.37	69	16.6	82.2	10.5	22.3	77.3	0.1	75.8	56.9
ICSV 88032	3.7	2.93	58	22.5	74.1	13.3	65.5	34.3	0.0	76.1	56.3
IS 23509	3.7	2.60	50	22.6	75.5	7.8	16.0	84.0	0.1	80.7	62.2
ICSV 88013	3.6	1.73	23	25.6	72.2	10.0	0.0	99.5	0.2	78.7	60.6
ICSH 88065	3.3	1.70	40	18.6	80.0	9.2	0.0	98.2	1.6	77.6	58.1
ICSV 401	3.3	3.48	26	16.8	80.5	10.1	75.5	24.2	0.1	78.4	59.9
ICSV 89106	3.1	3.32	37	14.3	83.2	6.7	75.9	23.8	0.0	74.4	54.4
ICSH 89051	2.8	2.88	50	20.4	76.9	9.2	21.8	77.4	0.1	76.9	57.3
ISIAP Dorado	2.4	2.53	88	25.2	72.9	11.2	34.7	64.5	0.0	78.6	59.2
ICSV-LM 86513	2.3	2.17	83	24.2	73.7	8.8	1.6	98.2	0.1	75.8	54.7
ICSV 88002	2.1	1.94	98	30.2	68.2	12.7	5.5	94.2	0.1	80.2	62.3
Controls											
ICSH 110	2.9	2.31	38	34.0	64.4	10.4	3.2	96.5	0.2	78.7	60.4
SDSH 48	2.8	2.62	55	27.6	70.2	10.6	23.5	75.3	0.0	78.4	59.7
ICSV 112	2.6	1.82	41	34.7	64.0	12.5	0.5	98.5	1.0	78.5	60.6
SE ±	0.037	0.018	1.670	0.316	0.443	0.260	0.262	0.318	0.000	0.200	0.096
Mean	3.51	2.59	43.88	21.00	76.92	9.60	29.29	70.27	0.15	77.06	57.90
CV %	10.5	2.0	11.4	3.0	1.2	5.4	1.8	0.9	11.1	0.5	0.3

[1] % >4.0 mm. [2] % 4.0—2.6 mm. [3] % <2.6 mm.

Table S14m—Malting data for 24 entries and three controls in the 1992/93 season International Sorghum Variety and Hybrid Adaptation Trial.

Cultivar	Grain color	Germination count: 24 h	Germination count: 48 h	Mold count	Malting loss (%)	Total loss (%)	Diastatic power (DU g^{-1})
5 DX 160	White	85	92	2	15.8	23.1	21.4
ICSH 871001	Creamy-white	80	93	1	17.2	28.2	38.2
KAT 83369	Creamy-white	94	98	2	18.1	28.3	40.8
IS 23496	Creamy-white	81	91	1	16.8	25.6	38.9
ICSH 90002	Creamy-white	95	96	1	14.8	19.7	19.3
SPH 468	Creamy-white	88	98	1	17.0	26.8	29.9
ICSV 89102	White	95	96	2	16.9	28.0	33.1
ICSH 89123	Creamy-white	89	92	2	18.1	27.7	27.1
IS 9302	Creamy-white	90	91	3	15.9	24.9	14.6
IS 8193	Creamy-white	89	96	3	16.9	27.1	31.4
ICSH 89034	Creamy-yellow-white	92	96	1	14.2	23.3	30.3
ICSV 111	Creamy-white	94	97	2	17.6	28.8	39.8
SPV 669	Creamy-white, mottled	94	96	1	17.4	28.9	31.9
ICSH 89020	Creamy-white	93	96	1	16.9	29.3	31.8
ICSV 88032	Creamy-white	97	97	1	17.6	29.0	31.4
IS 23509	Creamy-yellow-white	97	99	2	17.3	29.3	33.8
ICSV 88013	Creamy-white	99	99	2	17.9	30.2	33.3
ICSH 88065	Creamy-white	94	96	2	17.8	26.9	35.8
ICSV 401	Creamy-white	82	99	1	15.2	24.4	29.7
ICSV 89106	Creamy-white	65	89	1	16.7	24.1	26.7
ICSH 89051	Creamy-white	74	83	1	17.1	23.9	22.9
ISIAP Dorado	Creamy-white	84	92	2	15.7	22.0	24.2
ICSV-LM 86513	Creamy-yellow-white	86	90	2	17.6	24.9	29.4
ICSV 88002	Creamy-white	86	93	2	18.0	26.3	33.6
Controls							
ICSH 110	Creamy-white	88	93	4	17.1	28.9	49.1
SDSH 48	Creamy-white	82	98	2	15.3	22.5	27.8
ICSV 112	Creamy-white	94	97	2	18.4	31.0	46.6
Mean		88.4	94.6	1.7	16.9	26.4	31.6

Table S15—Grain-quality evaluation of eight entries in the 1992/93 season International Sorghum Variety and Hybrid Adaptation Trial; R-Lines.

Line	Visual hardness score	Kernel weight (g 100^{-1})	Floaters (%)	Dehulling loss (%)	Milling yield (%)	Water absorption (%)	Size fraction: large[1]	Size fraction: medium[2]	Size fraction: small[3]	Reflectance value: dry	Reflectance value: wet
ICSR 154	4.7	1.84	17	17.0	81.4	10.2	0.3	97.9	1.62	76.4	57.4
ICSR 89022	4.5	1.71	57	18.3	79.2	9.7	1.7	95.7	2.24	70.9	50.9
ICSR 89032	3.8	2.42	58	18.5	79.8	8.2	16.6	83.1	0.05	73.8	53.6
ICSR 89028	3.5	2.84	55	18.6	80.1	6.1	40.9	59.0	0.04	77.5	58.4
ICSR 112	3.4	1.91	59	20.7	77.8	8.8	3.7	96.1	0.17	77.7	58.6
ICSR 89018	3.3	2.94	32	20.0	78.7	6.8	35.6	63.8	0.04	77.7	58.9
ICSR 172	3.1	2.17	81	21.6	77.2	8.5	18.7	81.0	0.08	77.4	58.3
MR 836	3.1	2.59	63	26.8	72.0	10.0	25.9	74.0	0.04	78.5	59.8
SE ±	0.058	0.021	1.500	0.254	0.311	0.230	0.530	0.521	0.016	0.131	0.123
Mean	3.66	2.30	52.83	20.17	78.26	8.54	17.92	81.32	0.53	76.21	56.97
CV %	15.8	2.7	8.5	2.5	0.8	5.4	5.9	1.3	5.4	0.4	0.4

[1] % >4.0 mm. [2] % 4.0—2.6 mm. [3] % <2.6 mm.

Table S15m—Malting data for eight entries in the 1992/93 season International Sorghum Variety and Hybrid Adaptation Trial; R-Lines.

Line	Grain color	Germination count: 24 h	Germination count: 48 h	Mold count	Malting loss (%)	Total loss (%)	Diastatic power (DU g^{-1})
ICSR 154	Creamy-yellow-white	91	94	1	15.7	24.3	36.4
ICSR 89022	Creamy-yellow-white	78	81	3	16.7	25.7	22.8
ICSR 89032	Creamy-yellow-white	73	77	2	16.3	23.4	19.3
ICSR 89028	Creamy-white	54	65	3	15.3	19.8	9.2
ICSR 112	Creamy-white	80	83	3	16.6	25.6	22.4
ICSR 89018	Creamy-yellow-white	75	86	3	12.3	16.5	11.3
ICSR 172	Creamy-white	84	86	3	15.4	23.0	25.8
MR 836	Creamy-white	79	92	2	15.2	24.9	32.8
Mean		76.8	83.0	2.5	15.4	22.9	22.5

Table S16—Grain-quality evaluation of seven entries in the 1992/93 season International Sorghum Variety and Hybrid Adaptation Trial; B-Lines.

Line	Visual hardness score	Kernel weight (g 100^{-1})	Floaters (%)	Dehulling loss (%)	Milling yield (%)	Water absorption (%)	Size fraction: large[1]	Size fraction: medium[2]	Size fraction: small[3]	Reflectance value: dry	Reflectance value: wet
ICSB 88005	3.9	2.57	54	13.6	84.1	6.8	3.5	96.4	0.1	75.7	55.7
ICSB 84	3.8	2.56	68	17.8	80.3	5.8	11.8	88.0	0.1	71.0	49.4
ICSB 11	3.4	2.94	75	18.2	80.5	5.7	50.3	49.7	0.1	76.9	58.4
ICSB 56	3.3	1.85	58	31.8	67.1	8.3	1.5	98.2	0.2	76.1	56.7
ICSB 31	3.3	2.56	61	24.3	74.3	6.4	22.3	77.6	0.0	77.2	57.6
ICSB 67	3.0	2.29	83	40.1	58.9	7.3	9.0	89.9	0.7	78.8	59.8
296-B	2.7	2.36	100	57.9	41.6	13.3	31.6	68.0	0.2	74.5	55.2
SE ±	0.043	0.028	1.325	0.649	0.759	0.164	0.481	0.490	0.027	0.135	0.117
Mean	3.32	2.45	71.43	29.08	69.54	7.66	18.56	81.10	0.19	75.74	56.10
CV %	13.0	3.4	5.6	4.5	2.2	4.3	5.2	1.2	26.9	0.4	0.4

[1] % >4.0 mm. [2] % 4.0—2.6 mm. [3] % <2.6 mm.

Table S16m—Malting data for seven entries in the 1992/93 season International Sorghum Variety and Hybrid Adaptation Trial; B-Lines.

Line	Grain color	Germination count: 24 h	Germination count: 48 h	Mold count	Malting loss (%)	Total loss (%)	Diastatic power (DU g^{-1})
ICSB 88005	Creamy-white	59	91	4	17.1	26.2	34.6
ICSB 84	Creamy-white	36	64	3	13.5	20.2	24.6
ICSB 11	White	68	90	1	16.4	25.4	26.6
ICSB 56	Creamy-white	85	92	3	18.2	28.9	50.6
ICSB 31	Creamy-white	92	94	2	14.8	21.2	22.5
ICSB 67	Creamy-white	90	94	4	16.6	25.4	26.1
296-B	Yellowy-white	17	24	5	19.7	21.5	5.02
Mean		63.9	78.4	3.1	16.6	24.1	27.1

Table S17—Grain-quality evaluation of 34 entries and two controls in the 1992/93 season Zimbabwe Department of Research and Specialist Services' Sorghum Advanced Hybrid Trial.

Hybrid	Visual hardness score	Kernel weight (g 100^{-1})	Floaters (%)	Dehulling loss (%)	Milling yield (%)	Water absorption (%)	Size fraction: large[1]	Size fraction: medium[2]	Size fraction: small[3]	Reflectance value: dry	Reflectance value: wet	Tannin content (=%CE)
8762-H	4.2	1.96	89	18.5	80.4	11.6	11.7	88.3	0.1	74.2	52.3	0.0
8939-H	4.1	1.94	68	14.9	84.0	9.6	10.3	89.5	0.1	74.2	52.4	0.0
8709-H	4.1	2.12	65	18.3	80.3	10.8	10.5	89.4	0.0	76.5	55.0	0.0
9031-H	3.9	1.88	74	21.4	77.2	9.8	8.5	91.4	0.2	74.5	51.3	0.0
8739-H	3.8	1.93	72	21.4	77.9	9.8	14.5	85.3	0.2	71.2	48.0	0.5
9045-H	3.8	1.62	94	27.5	71.4	14.6	3.5	95.7	0.8	68.7	45.2	0.3
8933-H	3.8	2.03	94	23.2	75.5	12.2	26.9	73.1	0.1	76.1	53.8	0.0
8613-H	3.7	1.50	79	18.9	79.6	10.8	0.6	97.0	2.3	76.5	56.2	0.0
9047-H	3.7	1.99	96	22.2	76.7	11.7	10.5	89.3	0.3	68.7	45.0	0.5
8834-H	3.6	1.85	90	21.7	77.3	10.8	4.2	95.7	0.1	71.9	49.4	0.5
8902-H	3.6	1.78	50	20.2	79.1	10.7	0.6	99.1	0.4	78.2	58.0	0.0
8820-H	3.5	2.03	73	17.2	81.4	9.4	9.2	90.5	0.2	72.7	49.6	0.5
8804-H	3.4	1.95	90	20.1	78.5	11.0	11.1	88.9	0.1	74.7	54.0	0.0
8608-H	3.3	1.81	66	21.6	79.4	10.7	2.3	97.3	0.2	71.9	50.6	0.0
8635-H	3.3	2.18	26	19.7	78.5	10.4	15.5	84.5	0.0	77.8	57.1	0.0
SDSH 148	3.3	1.96	31	17.8	79.9	9.0	11.6	88.2	0.2	73.2	51.6	0.0
8602-H	3.3	2.05	82	20.5	78.6	10.9	19.9	79.7	0.4	73.7	53.1	0.0
9046-H	3.3	2.19	46	17.8	80.7	9.5	13.1	86.8	0.0	72.8	50.5	1.0
8940-H	3.3	1.87	93	19.8	79.1	11.5	6.8	93.0	0.2	74.3	51.9	0.0
8880-H	3.2	1.96	60	21.0	76.9	10.2	6.5	93.4	0.1	77.0	56.8	0.0
8725-H	3.2	2.09	89	25.5	73.3	10.0	8.7	91.3	0.1	72.9	49.5	1.0
8717-H	3.2	2.06	98	25.3	73.3	9.0	11.9	88.2	0.1	75.2	54.5	0.0
8960-H	3.1	1.64	96	27.6	71.6	11.5	2.0	97.6	0.3	73.0	50.7	0.5
8944-H	3.1	1.61	95	27.5	70.2	12.9	5.0	94.9	0.2	66.9	44.1	0.4
8959-H	3.1	2.17	96	27.4	71.6	11.3	18.1	81.7	0.1	71.0	47.8	0.5
8605-H	3.0	1.70	49	22.2	75.3	11.0	1.0	98.4	0.5	76.8	57.4	0.0
8610-H	2.9	1.79	81	30.3	68.3	11.5	7.8	92.0	0.2	76.6	56.7	0.0
8903-H	2.8	1.87	54	21.0	77.6	9.7	2.0	97.7	0.3	78.5	58.8	0.0
8713-H	2.8	2.21	90	35.3	63.4	9.0	30.1	69.7	0.1	75.0	52.3	0.3
SDSH 49	2.7	1.61	93	32.8	65.6	10.0	0.9	97.2	1.7	68.6	46.0	0.3
8636-H	2.6	1.78	90	36.3	61.1	11.2	7.3	92.2	0.5	72.4	50.5	0.0
8921-H	2.4	2.73	87	38.2	60.2	7.7	34.7	65.3	0.0	67.7	45.2	0.8
8716-H	1.8	2.02	97	37.3	59.9	9.7	15.1	84.8	0.1	72.4	50.4	0.5
SDSH 378	1.5	1.89	94	36.8	61.5	12.1	12.3	87.5	0.1	60.5	34.0	4.5
Controls												
SDSH 48	3.7	1.85	35	16.0	82.5	10.6	3.8	95.6	0.6	75.9	54.9	0.0
ZWSH 1	2.2	1.37	98	23.0	75.8	14.0	0.4	98.8	0.8	75.0	54.9	0.0
SE ±	0.034	0.018	1.255	0.298	0.525	0.202	0.352	0.348	0.052	0.118	0.159	0.069
Mean	3.21	1.92	77.23	24.05	74.54	10.73	9.95	89.68	0.32	73.22	51.35	0.33
CV %	10.6	3.0	4.9	2.5	1.4	3.8	7.1	0.8	31.9	0.3	0.6	41.5

1% >4.0 mm. 2% 4.0—2.6 mm. 3% <2.6 mm.

Table S17m—Malting data for 34 entries and two controls in the 1992/93 season Zimbabwe Department of Research and Specialist Services' Sorghum Advanced Hybrid Trial.

Hybrid	Grain color	Germination count: 24 h	Germination count: 48 h	Mold count	Malting loss (%)	Total loss (%)	Diastatic power (DU g^{-1})
H8762-H	Creamy-white, mottled	94	98	0	14.8	24.3	46.6
8939-H	Creamy-white, mottled	95	95	1	15.2	24.4	31.5
8709-H	Creamy-white, mottled	97	98	1	15.9	25.9	39.7
9031-H	Creamy-white, mottled	87	90	2	14.2	23.0	48.9
8739-H	Red	91	92	1	13.5	23.2	37.4
9045-H	Red	94	95	2	14.9	24.7	41.0
8933-H	Creamy-white, mottled	94	95	3	11.9	18.0	35.6
8613-H	Creamy-yellow-white	93	96	2	15.9	25.3	43.5
9047-H	Red	94	96	2	14.6	22.4	33.2
8834-H	Red	96	97	0	13.4	20.2	31.4
8902-H	Creamy-white	98	98	1	13.6	19.5	26.6
8820-H	Red	98	98	0	12.0	18.7	40.5
8804-H	Creamy-white, mottled	85	90	1	13.6	21.6	18.3
8608-H	Creamy-white	94	95	2	16.2	28.0	36.7
8635-H	Creamy-white	84	84	2	12.8	19.6	27.8
SDSH 148	Yellowy-white	90	93	1	13.2	21.4	28.5
8602-H	Creamy-white, mottled	86	95	1	12.2	18.4	37.3
9046-H	Red	95	96	1	13.4	20.3	34.2
8940-H	Creamy-white, mottled	98	99	1	12.1	18.5	24.6
8880-H	Creamy-white	92	97	2	13.0	19.4	33.1
8725-H	Red	98	98	1	12.4	19.2	36.2
8717-H	Creamy-white	88	95	1	12.0	17.7	38.5
8960-H	Red	92	94	2	14.5	21.3	37.0
8944-H	Red	94	94	1	14.2	21.2	33.2
8959-H	Red	97	97	2	13.7	21.5	38.3
8605-H	Creamy-white	90	92	2	16.0	26.4	44.0
8610-H	Creamy-white, mottled	90	91	1	13.0	18.6	27.1
8903-H	Creamy-white	97	97	1	13.3	18.8	35.4
8713-H	Red	96	97	0	11.4	15.1	26.5
SDSH 49	Red	95	96	1	15.6	25.0	47.6
8636-H	Yellowy-white	90	91	3	15.8	24.4	41.4
8921-H	Red	92	97	2	11.4	16.0	27.8
8716-H	Red	88	91	0	14.0	21.4	46.6
SDSH 378	Brown	92	96	0	13.2	21.0	47.8
Controls							
SDSH 48	Creamy-white	94	96	1	14.0	22.4	38.7
ZWSH 1	Yellowy-cream, mottled	98	100	2	16.8	29.4	41.3
Mean		92.9	95.0	1.3	13.8	21.6	36.2

Table S18—Grain-quality evaluation of 32 entries and three controls in the 1992/93 season Zimbabwe Department of Research and Specialist Services' Sorghum Drought Screening Nursery Trial.

Variety	Visual hardness score	Kernel weight (g 100^{-1})	Floaters (%)	Dehulling loss (%)	Milling yield (%)	Water absorption (%)	Size fraction: large[1]	Size fraction: medium[2]	Size fraction: small[3]	Reflectance value: dry	Reflectance value: wet	Tannin content (≈%CE)
NL 852	4.6	2.67	76	16.4	80.8	11.5	7.3	92.6	0.0	73.6	55.3	0.0
NL 275	4.2	2.21	88	16.2	82.4	7.7	0.9	98.5	0.4	79.2	58.6	0.2
NL 619	4.1	1.87	26	18.5	80.1	9.4	0.4	97.6	1.6	78.0	60.3	0.0
NL 263	4.1	2.74	51	23.3	74.9	11.1	21.0	78.8	0.0	78.2	58.3	0.0
NL 775	4.0	1.54	55	18.2	80.3	12.7	0.5	95.8	3.2	75.7	55.7	0.0
NL 753	3.9	1.91	51	19.7	78.2	9.9	3.6	95.8	0.1	77.1	55.3	2.5
NL 836-2	3.9	1.90	62	18.3	79.7	9.8	2.8	94.4	0.9	75.7	56.1	0.2
NL 505	3.8	1.57	61	17.9	80.6	13.2	0.4	98.8	0.8	73.9	53.0	0.0
NL 623	3.4	3.01	55	23.6	74.4	9.1	21.2	78.2	0.0	80.0	62.0	0.0
NL 768	3.2	1.76	64	20.6	77.8	9.3	0.5	98.4	0.5	72.3	49.7	0.0
NL 681	3.1	1.88	83	18.3	79.7	12.0	3.9	95.6	0.4	70.2	47.5	0.0
NL 274	2.9	2.21	87	32.2	66.5	9.2	0.8	98.6	0.1	75.7	52.5	0.0
NL 653	2.8	1.99	87	32.3	65.7	10.8	4.6	95.2	0.1	79.9	61.4	0.0
NL 607	2.8	2.42	90	29.8	69.2	11.1	11.4	88.5	0.1	56.5	30.8	5.0
NL 463	2.7	1.84	69	24.0	74.5	18.2	3.0	96.6	0.1	79.7	59.3	0.0
NL 634	2.7	2.04	77	14.4	83.8	11.4	12.5	87.4	0.1	75.3	54.6	0.0
NL 843	2.5	2.17	97	18.1	79.4	10.4	9.4	90.4	0.0	72.0	51.3	0.0
NL 752-2	2.5	2.37	80	27.1	70.8	10.4	33.8	66.1	0.0	73.9	52.4	0.0
NL 471	2.3	1.91	42	20.6	77.6	11.3	0.2	99.2	0.7	76.0	56.5	0.3
NL 237	2.2	2.41	67	30.1	67.6	12.3	18.6	81.1	0.0	65.7	44.1	0.0
NL 205	2.2	1.91	100	22.8	75.3	12.3	12.7	86.7	0.1	76.0	56.4	0.0
NL 265	2.1	1.99	98	25.0	73.2	8.1	9.8	90.1	0.1	68.6	43.7	0.0
NL 335	2.1	1.99	100	24.6	74.1	13.4	4.2	95.1	0.3	77.7	58.1	0.0
NL 803	1.9	2.41	96	34.0	64.5	13.3	12.0	87.0	0.1	67.6	43.8	0.5
NL 632	1.7	2.97	63	26.0	72.7	9.7	68.1	31.8	0.0	59.5	32.1	1.5
NL 692	1.7	2.03	81	26.6	71.9	13.5	0.4	98.8	0.0	79.8	59.4	0.2
NL 267	1.6	2.22	97	37.9	60.9	10.4	24.9	75.1	0.0	64.1	39.0	0.0
NL 671	1.6	1.67	100	41.7	57.3	11.9	4.1	95.1	0.5	75.1	50.8	0.0
NL 218	1.6	1.81	97	57.0	41.7	14.1	11.6	87.4	0.2	61.9	36.4	7.5
NL 639	1.2	2.96	99	52.0	46.5	11.1	52.4	47.4	0.0	64.0	36.7	0.7
NL 255	1.1	1.70	96	25.3	72.4	14.3	1.5	98.0	0.2	60.6	34.5	4.5
NL 214	1.0	1.18	100	45.9	52.3	14.8	0.5	93.3	5.6	62.2	36.2	8.0
Controls												
SV 1	4.1	2.16	35	16.2	81.8	12.0	1.6	98.8	0.0	77.5	58.0	0.0
SV 2	3.5	2.69	31	16.3	81.7	11.6	15.4	84.2	0.0	76.9	55.8	0.3
Chibonda	1.0	3.05	100	56.3	42.9	12.4	52.1	47.8	0.1	73.3	48.8	1.4
SE ±	0.038	0.024	1.477	0.342	0.409	0.181	0.163	0.363	0.069	0.110	0.139	0.105
Mean	2.67	2.15	76.00	27.05	71.22	11.53	12.22	86.97	0.47	72.36	50.39	0.93
CV %	14.3	3.2	5.8	2.5	1.2	3.1	2.7	0.8	29.9	0.3	0.6	22.4

1% >4.0 mm. 2% 4.0—2.6 mm. 3% <2.6 mm.

Table S18m—Malting data for 32 entries and three controls in the 1992/93 season Zimbabwe Department of Research and Specialist Services' Sorghum Drought Screening Nursery Trial.

Variety	Grain color	Germination count: 24 h	Germination count: 48 h	Mold count	Malting loss (%)	Total loss (%)	Diastatic power (DU g^{-1})
NL 852	Creamy-white	100	100	2	18.7	30.9	53.1
NL 275	Creamy-white	90	90	2	12.3	18.2	25.2
NL 619	Creamy-white	88	93	2	16.4	27.6	29.5
NL 263	Creamy-yellow	85	87	2	16.4	24.0	29.0
NL 775	Creamy-white	100	100	1	16.3	27.8	39.0
NL 753	Red	97	99	1	12.9	20.7	39.3
NL 836-2	Creamy-yellow-white	95	97	1	20.4	29.4	20.0
NL 505	Creamy-white	88	90	1	15.9	125.1	37.2
NL 623	Creamy-yellow-white	87	91	1	16.1	23.4	24.9
NL 768	Red	81	91	1	18.9	30.1	48.4
NL 681	Red	86	87	1	15.9	24.7	43.0
NL 274	White, mottled	95	97	3	16.7	25.9	46.7
NL 653	Creamy-yellow-white	86	89	3	15.8	21.8	17.4
NL 607	Brown	93	93	0	11.5	17.0	28.5
NL 463	Yellowy-white, mottled	97	99	0	16.9	27.9	26.9
NL 634	Creamy-white	95	96	2	15.5	26.4	25.4
NL 843	Creamy-yellow-white	95	96	2	14.8	24.5	58.9
NL 752-2	Yellowy-white, mottled	95	97	2	16.6	25.7	34.8
NL 471	Creamy-white	87	88	1	15.5	24.7	31.7
NL 237	Yellowy-tan	90	91	3	15.3	25.5	24.6
NL 205	Creamy-red	93	94	2	13.0	18.5	42.3
NL 265	White, mottled	99	100	3	12.0	17.2	30.5
NL 335	Creamy-white	92	95	1	16.4	25.7	42.7
NL 803	Yellowy-tan	71	76	2	17.3	23.8	22.7
NL 632	Gray, mottled	89	91	4	15.4	23.9	29.4
NL 692	Creamy-yellow-white	94	94	3	17.6	29.3	38.9
NL 267	Yellowy-white	92	92	3	16.7	26.8	30.8
NL 671	Creamy-red, mottled	79	84	0	19.3	27.6	26.8
NL 218	Purpley-brown	88	90		15.5	25.5	42.7
NL 639	Gray, mottled	86	90	4	16.9	25.9	27.1
NL 255	Reddish-gray	92	94	2	18.6	30.3	49.6
NL 214	Reddish-brown	95	98	1	13.8	25.2	58.5
Controls							
SV 1	Creamy-white	94	96	0	17.4	27.2	26.0
SV 2	Creamy-white	85	92	1	14.2	23.3	23.5
Chibonda	Gray	95	98	3	15.9	24.5	38.2
Mean		90.7	93.0	1.7	16.0	25.0	34.7

Table P1—Grain-quality evaluation of 11 entries in a 1992/93 season batch of pearl millets from SADC.

Variety	Visual hardness score	Kernel weight (g 100^{-1})	Floaters (%)	Dehulling loss (%)	Milling yield (%)	Water absorption (%)	Size fraction: large[1]	Size fraction: medium[2]	Size fraction: small[3]
ICMV 88908	3.4	1.61	37	11.9	83.7	11.6	72.1	27.7	0.2
SDMV 90016	3.2	1.14	68	10.8	86.4	13.5	31.1	68.0	0.6
TSPM 91018	3.2	1.12	22	10.9	84.4	10.1	30.1	69.8	0.1
SDMV 89008	3.2	0.92	55	13.6	81.8	18.8	10.3	89.1	0.6
SDMV 89007	3.1	1.18	37	11.4	84.2	11.1	26.2	73.5	0.4
SDMV 90016	3.1	0.87	46	11.5	86.4	15.3	17.3	81.7	0.8
TSPM 91001	3.1	0.90	26	9.6	84.4	10.6	10.3	88.2	1.4
Okashana 1	3.0	1.14	21	10.8	81.4	10.0	30.7	69.1	0.2
SDMV 89003	2.6	0.91	54	12.3	83.3	12.5	16.2	82.9	0.7
SDMV 89004	2.3	1.26	54	13.3	78.8	12.8	38.1	61.7	0.1
PMV 2	2.3	1.13	62	13.3	80.5	13.7	35.8	63.9	0.2
SE ±	0.044	0.011	1.005	0.161	0.539	0.299	0.475	0.469	0.027
Mean	2.93	1.11	43.76	11.76	83.21	12.73	28.91	70.51	0.47
CV %	14.9	2.6	6.9	2.8	1.3	4.7	3.3	1.3	11.5

[1] % >2.6 mm. [2] % 2.6—1.7 mm. [3] % <1.7 mm.

Table P2—Grain-quality evaluation of 18 entries in a 1992/93 season batch of pearl millets from SMIP.

Variety	Visual hardness score	Kernel weight (g 100^{-1})	Floaters (%)	Dehulling loss (%)	Milling yield (%)	Water absorption (%)	Size fraction: large[1]	Size fraction: medium[2]	Size fraction: small[3]	Reflectance value: dry
SDMV 90016	3.5	1.09	52	11.0	84.8	13.6	28.3	71.4	0.2	62.7
ICMV-F 86415	3.4	0.89	50	10.9	86.9	13.7	22.5	77.0	0.5	51.0
SDMV 90004	3.2	1.23	70	11.0	85.2	10.9	27.5	72.3	0.1	50.9
SDMV 89005	3.2	1.07	37	9.9	87.2	12.2	24.2	75.3	0.5	51.0
SDMV 89003	3.2	0.70	64	11.3	87.5	17.7	12.9	85.8	1.2	50.6
TSPM 91018	3.1	1.33	44	11.2	86.9	11.5	33.5	66.4	0.1	58.3
SDMV 90031	3.1	1.14	51	13.7	83.3	15.7	39.1	60.4	0.4	52.1
SDMV 87001	3.1	0.97	28	9.0	84.8	11.5	22.1	77.5	0.3	57.2
SDMV 89002	3.1	1.00	55	10.5	86.8	15.2	37.1	62.6	0.2	54.6
SDMV 89007	2.9	1.01	40	11.8	85.0	13.3	17.8	81.4	0.7	54.1
SDMV 89008	2.8	0.84	66	14.7	83.7	19.6	10.6	88.5	0.7	53.2
ICMV 88908	2.7	1.48	67	11.3	85.2	12.3	62.5	37.3	0.1	51.4
SDMV 89004	2.6	1.28	87	11.2	86.6	17.9	34.2	65.4	0.3	49.4
PMV 2	2.5	0.91	74	10.7	85.5	18.3	32.4	67.2	0.4	49.3
TSPM 91001	2.5	0.83	66	11.5	86.3	17.5	5.1	92.5	2.3	54.5
SDMV 89001	2.2	0.73	53	14.2	84.0	26.0	6.6	91.4	1.8	50.9
Serere 17	2.1	1.54	98	9.3	87.8	13.7	82.2	17.6	0.2	47.1
Serere 6A	1.9	1.20	69	10.6	85.5	14.5	45.9	53.5	0.4	51.7
SE ±	0.051	0.024	1.219	0.194	0.762	0.363	0.630	0.618	0.052	0.193
Mean	2.82	1.07	59.50	11.32	85.72	15.28	30.25	69.08	0.57	52.76
CV %	18.2	6.9	6.1	3.4	1.8	4.8	4.2	1.8	18.0	0.7

[1] % >2.6 mm. [2] % 2.6—1.7 mm. [3] % <1.7 mm.

Table P2m—Malting data for 18 entries in a 1992/93 season batch of pearl millets from SMIP.

Variety	Grain color	Germination count: 24 h	Germination count: 48 h	Mold count	Malting loss (%)	Total loss (%)	Diastatic power (DU g^{-1})
SDMV 90016	Yellowy-cream	99	99	0	14.0	24.0	32.9
ICMV-F 86415	Gray	96	97	0	14.5	24.8	37.6
SDMV 90004	Gray	91	92	0	13.5	22.6	35.7
SDMV 89005	Gray-brown	89	92	0	13.3	20.6	36.5
SDMV 89003	Gray-brown	76	80	0	16.5	26.5	39.5
TSPM 91018	Gray-brown	95	96	0	12.2	20.5	35.1
SDMV 90031	Deep gray	83	87	0	15.5	22.9	36.4
SDMV 87001	Gray	90	94	0	12.9	18.5	20.0
SDMV 89002	Gray-brown	95	95	0	15.3	23.5	39.1
SDMV 89007	Gray	87	87	0	12.9	20.7	27.2
SDMV 89008	Gray-brown	70	71	0	17.8	27.7	35.7
ICMV 88908	Deep gray	92	93	0	11.6	17.3	41.3
SDMV 89004	Gray-brown	87	90	0	18.4	21.6	47.6
PMV 2	Gray-brown	86	87	0	15.6	24.5	51.6
TSPM 91001	Gray-brown	77	80	0	13.6	23.0	33.4
SDMV 89001	Gray-brown	56	57	0	19.6	29.3	42.4
Serere 17	Gray-brown	86	91	0	11.6	17.5	33.6
Serere 6A	Gray	88	91	0	13.1	21.0	37.1
Mean		85.7	87.7	0.0	14.5	22.6	36.8

About ICRISAT

The semi-arid tropics (SAT) encompasses parts of 48 developing countries including most of India, parts of southeast Asia, a swathe across sub-Saharan Africa, much of southern and eastern Africa, and parts of Latin America. Many of these countries are among the poorest in the world. Approximately one-sixth of the world's population lives in the SAT, which is typified by unpredictable weather, limited and erratic rainfall, and nutrient-poor soils.

ICRISAT's mandate crops are sorghum, pearl millet, finger millet, chickpea, pigeonpea, and groundnut; these six crops are vital to life for the ever-increasing populations of the semi-arid tropics. ICRISAT's mission is to conduct research which can lead to enhanced sustainable production of these crops and to improved management of the limited natural resources of the SAT. ICRISAT communicates information on technologies as they are developed through workshops, networks, training, library services, and publishing.

ICRISAT was established in 1972. It is one of 16 nonprofit, research and training centers funded through the Consultative Group on International Agricultural Research (CGIAR). The CGIAR is an informal association of approximately 50 public and private sector donors; it is co-sponsored by the Food and Agriculture Organization of the United Nations (FAO), the United Nations Development Programme (UNDP), the United Nations Environment Programme (UNEP), and the World Bank.