PN-ACB-509
95582

Quantitative Assessment of Pollution and Recharge Sources to the Groundwater of the Almaty Basin

Ben-Gurion University of the Negev,
J. Blaustein Institute for Desert Research, Israel

Institute of Hydrogeology and Hydrophysics of
Kazakstan Academy of Science, Kazakstan

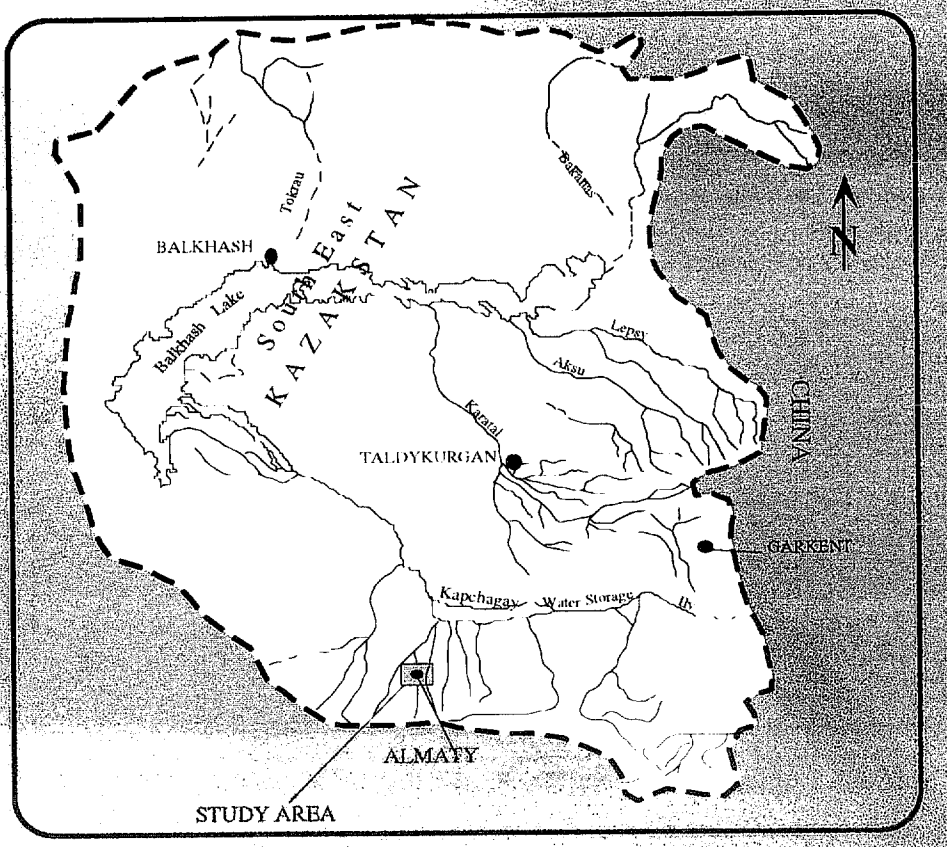

Supported by:

U.S. Agency for International Devlopment

PN-ACB-509
95582

Quantitative Assessment of Pollution and Recharge Sources to the Groundwater of the Almaty Basin

Ben-Gurion University of the Negev,
J. Blaustein Institute for Desert Research, Israel

Institute of Hydrogeology and Hydrophysics of
Kazakstan Academy of Science, Kazakstan

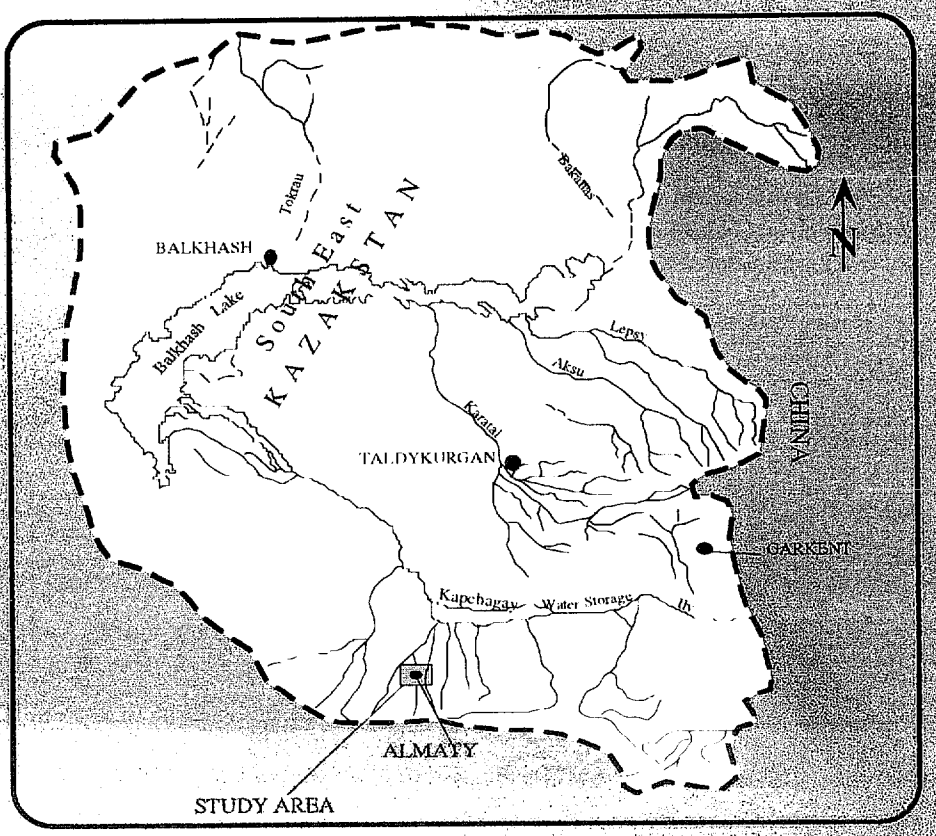

Supported by:

U.S. Agency for International Devlopment

FINAL REPORT

Covering Period: August 1993 to July 1997

Submitted to the Office of the Science Advisor
U.S. Agency for International Development

Quantitative Assessment of Pollution and Recharge Sources to the Groundwater of the Almaty Basin

Principal Investigators: E.M. Adar, A. Yakirevich & A.S. Issar
Grantee Institution: Ben-Gurion University of the Negev,
J. Blaustein Institute for Desert Research,
Israel

Collaborators (Principal Investigators): A. K. Djakelov & V.V. Veselov
Institution: Institute of Hydrogeology and Hydrophysics of
Kazakstan Academy of Science,
Kazakstan

Project Number: BGU 88353
Grant Number: TA-MOU-CA13-059

A.I.D. Grant Project Officer: David Mulenex

Project Duration: 10 August 1993 - 31 July 1997

TABLE OF CONTENTS

	Page
EXECUTIVE SUMMARY	3
RESEARCH OBJECTIVES	4
METHODS AND RESULTS	
Hydrogeological description of the study area	4
General scheme of groundwater flow in the study area	12
Major potential sources for groundwater pollution in the study area	13
Criteria for separating the study area into subaquifers and into compartments within each sub-aquifer	17
Classification of aquifer units with multi-variables cluster analysis	21
Description of the mathematical algorithm	37
Results obtained with the mixing cell model	40
Estimation of transmissivities between cells	58
Conclusions	62
IMPACT RELEVANCE AND TECHNOLOGY TRANSFER	64
PROJECT ACTIVITIES/OUTPUTS	65
PROJECT PRODUCTIVITY	65
FUTURE WORK	66
LITERATURE CITED	68
APPENDIX I	70
APPENDIX II	81

EXECUTIVE SUMMARY

This research project planned to develop and implement a novel hydrological model of the hydrogeological system in the Almaty basin. Its major objective was to identify and quantify the groundwater resources and the sub-surface flow pattern of various water bearing units in the local alluvial aquifer. This bears on one of the most acute problems which Kazakstan and most other Central Asia Republics are facing, namely, the deterioration of groundwater quality due to pollution and over-exploitation of the aquifers. To accomplish the objectives it was necessary to identify and elaborate sources of recharge, hydraulic connections between sub-aquifers, and to classify potential contaminants of water bearing layers by anthropogenic pollution. When the project began in 1994, the two upper aquifer sections were already out of the production due to deteriorating water quality. The scientific objective of the project was to adapt and apply a new methodology based on environmental tracers so as to establish the detailed groundwater flow affected by various sources of pollution.

The first year of the project was devoted to the assessment of the groundwater flow system, which also includes collection of available hydrological and hydrochemical data. Later this information was utilized in a multi-variable statistical cluster analysis to discretize the aquifer into distinguishable bodies of groundwater. Results obtained by the cluster analysis confirmed the already known subdivision of the multi-aquifer system, but they also suggested further discretization within each sub-layer according to spatial hydrochemical distribution. During the following years, the extension of the suggested water bodies was examined and validated against existing geological and hydrological information (Kazakstan team). Hydrochemical data and incomplete isotopic information were used for refining of the flow pattern. At this stage a three-dimensional model of interconnected mixing cells was formulated (by both Israeli and Kazakstan teams). Numerical simulations were performed using macro-elements concentration data occasioned by a lack of sufficient isotopic information. Results from the numerical model supported by the hydrogeological investigation clearly indicated the possibility of hydraulic connections between productive sub-aquifers and the highly contaminated water bodies. The available stable and radioactive isotopes were used as a measure of verification and validation of the suggested flow components obtained with the numerical model.

RESEARCH OBJECTIVES

This research project aimed to examine a very critical issue: to identify and quantify the groundwater resources and the sub-surface flow system of the Almaty basin in Kazakstan. This focuses on one of the most acute problems which Kazakstan and most other Central Asia Republics are facing, namely, the deterioration of groundwater quality due to pollution and over-exploitation of the aquifers potential. To solve the problem, it was necessary to elaborate various sources of recharge, hydraulic connections between sub-aquifers and to identify potential sources of contamination of water bearing layers by anthropogenic pollution. The major goal was to provide the planners with a quantitative assessment of groundwater fluxes as a basis for an appropriate evaluation of the groundwater potential. Due to a complicated hydrogeological flow system, we suggest the adaptation and application of a new hydrochemical model aimed for the quantitative identification of sources of recharge and subsurface fluxes in regional groundwater basins.

The specific objectives were :

1. To make use of existing data concerning local environmental tracers for estimation of inflows (natural and man-made recharge) and aquifer parameters.
2. To allow for the inexpensive assessment of groundwater systems especially for basins with scarce hydrological information.
3. To develop a computer code for dynamic hydrochemical modeling by collaborative work of the Kazakstan and Israeli team.

METHODS AND RESULTS

Hydrogeological description of the study area

The study area is located on the northern slope of the mountain range Zailiisky Alatau, which is part of the mountain system Tian-Shan (Figure 1). The groundwater reservoir is situated at the merged alluvial fans of the rivers Malaya Almaatinka, Bolshaya Almaatinka, Karaglinka, and Aksay. The total area is approximately 182 km^2. This deposit is the main source of water supply to Almaty, the capital of Kazakstan. However, the industrial and municipal facilities of the city such as power plants, coal storage plants and garages, as well as the agricultural farms around it are the main sources of groundwater contamination.

The geological structure is composed by rocks of Proterozoic, Cambrian, Ordovic, Perm, Carbon, Neogen, and Quaternary rock systems. Hydrogeological conditions are primarily determined by structural geology: the geomorphologic and climatic features of the area, which is part of the artesian basin of Ily River alluvial depression (Sidhikov et al., 1993; Akhmedsafin et al., 1980). The main supply region of the groundwater is the Zailisky Alatau Mountains, whose summits are covered by glaciers and an accumulation of perennial snow. The average annual precipitation reaches 1,000 mm, with relatively high runoff percentage mainly in the form of large water flows during floods from mountains directed towards the valley of the Ily River. The study area is assumed to be composed of eleven aquifers, as illustrated in Fig. 2.

1) ***The aquifer of the modern alluvial deposits*** ***(aQ_{IV})*** consists of boulders and cobblestone-pebbles which turn downstream into gravel pebbles, gravel and sand interlayered by loamy sand and sandy loam in the north. The discharge of springs varies from 1.5 to 2.0 l/sec while the discharge of wells is from 0.1 to 1.8 l/sec with a drawdown of 1.3 m. The water is relatively fresh with TDS from 0.2 to 1.0 g/l, with calcium hydrocarbonate compounds, and sometimes even sulfate sodium-calcium compositions. The aquifer recharge is mainly achieved by direct infiltration of atmospheric precipitation and the water inflow from borderline aquifers. Groundwater from this aquifer is mainly used for water supply to the southern part of Almaty.

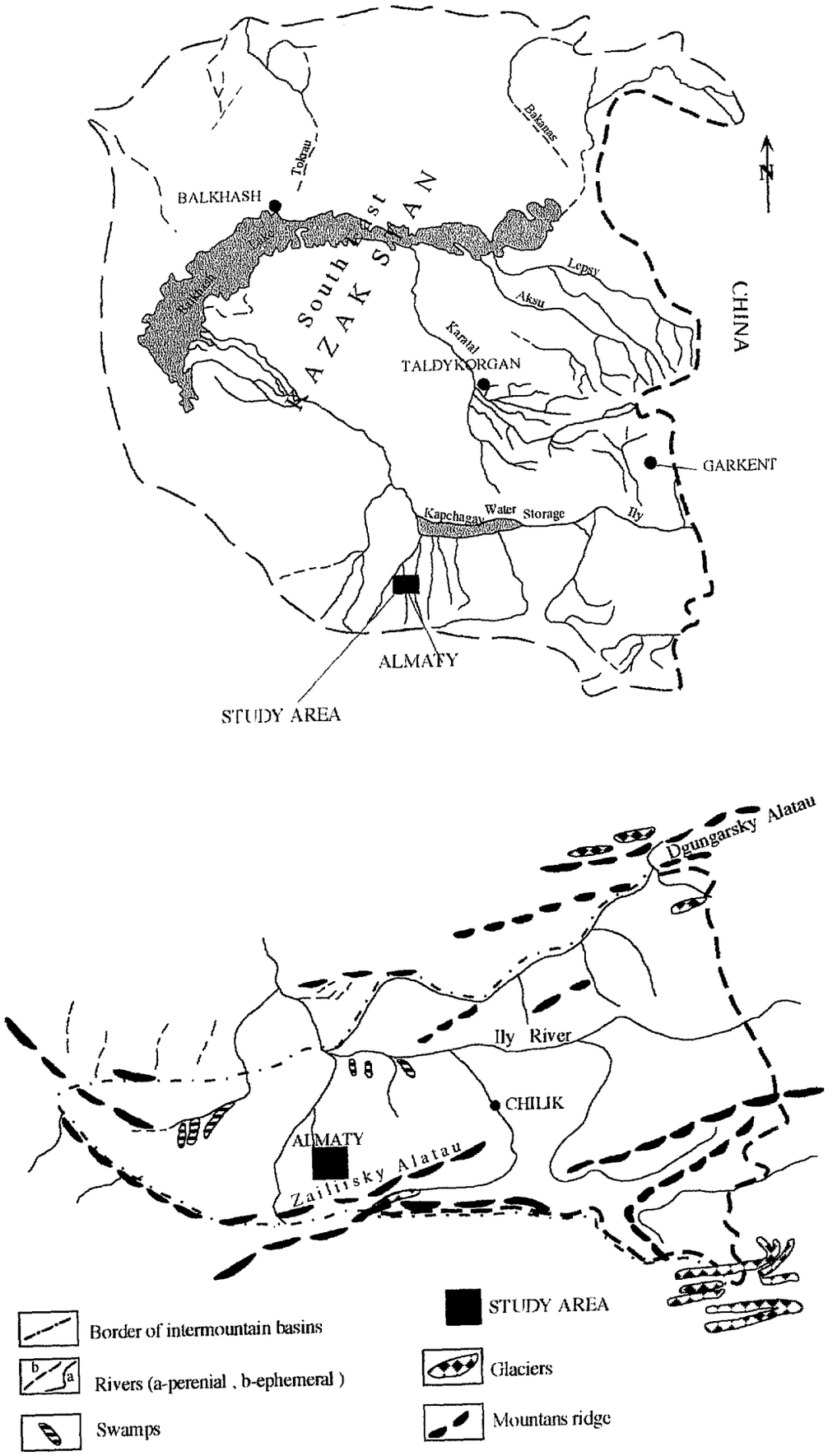

Fig. 1 A map of the Alma Ata basin showing the location of the research area.

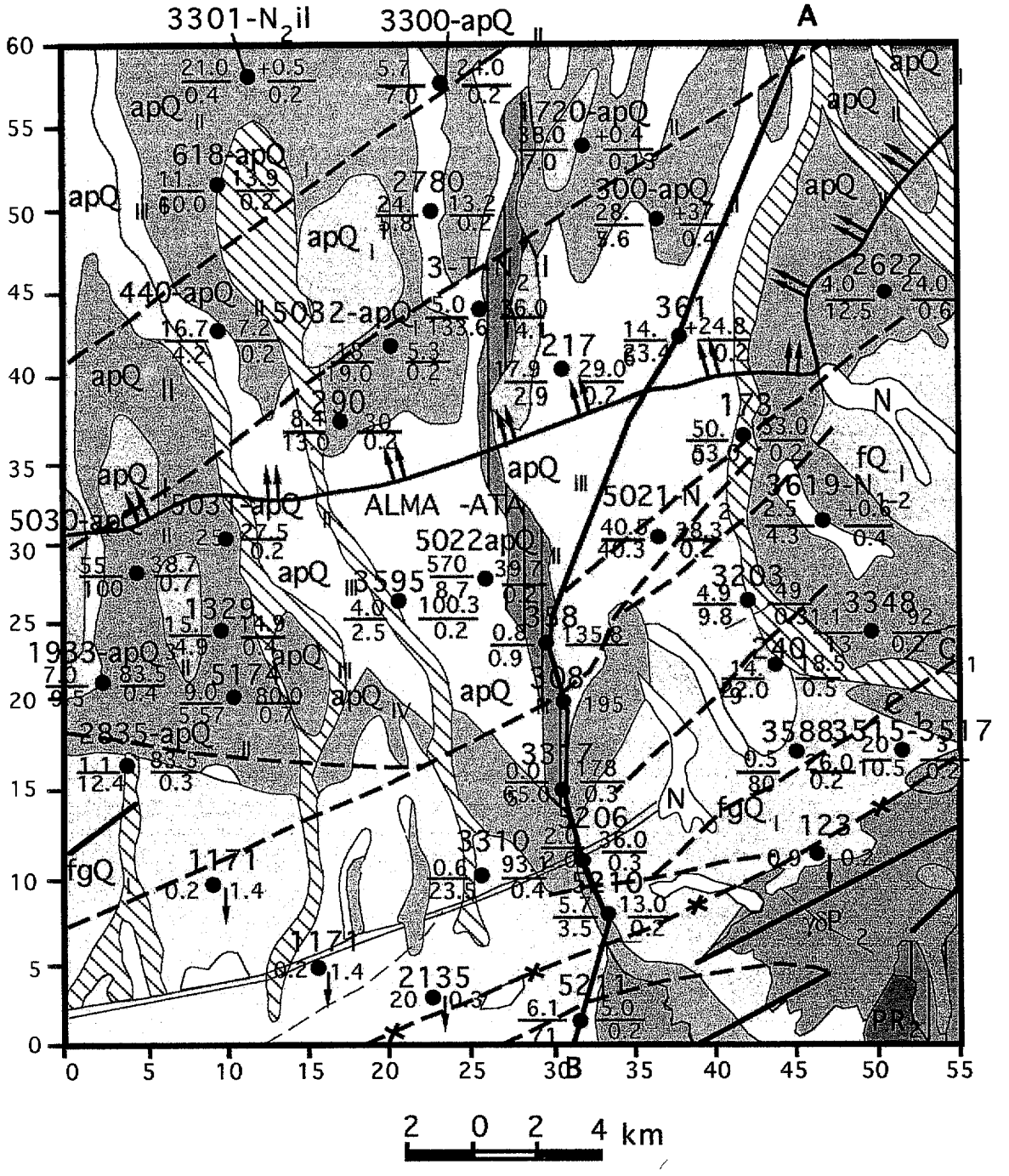

Fig. 2 Geological map of the study area - Almaty and vicinity
(The legend is attached in the following page).

Legend for Fig. 2
Aquifers and Geological formations

Aquifer in the modern alluvial deposits. Sands, gravel-pebble, cobblestones-pebbles with lenses of loamy sands and sandy loam.

Aquifer in the modern and the upper quaternary alluvial-prolluvial deposits. Pebbles, cobblestone-pebbles, sand with lenses of sandy loam.

apQ_{III} Aquifer in the upper quaternary alluvial-prolluvial deposits. Cobblestone-pebbles, gravel-pebbles, sands, pebbles sand with lenses of loamy sand and sandy loam.

Aquifer in the upper quaternary alluvial-prolluvial deposits. Cobblestone- pebbles, gravel-pebbles, sands, gravel sands with lenses sandy loam.

apQ_{I} Aquifer in the lower quaternary alluvial-prolluvial deposits. Cobblestone-pebbles, gravel-pebbles, sands, gravel, sands with lenses of loamy sand and sandy loam.

fgQ_{I} Aquifer in the lower quaternary fluvial-glacial deposits. Cobblestone-pebbles, gravel, lenses of sands and sandy loam.

N_2^{2-3} il Aquifer in the middle-upper Pliocene deposits of Iliisky formation. Slightly cemented sands, gravelite, clays, sandy loam, sands, loess loam.

N Aquifer in the Neogene deposits. Gravelite, clays, sandstone, sands, loess loam.

Aquifer in the fissured lower carbon deposits with tuffs, sandstone aleurolite, gritstone with sharp lenses of limestone.

Aquifer in the fissured middle Proterozoyic deposits (Kungey formation). Chlorite and chlorite-sericite shale with lenses of conglomerate, gravelite, sandstone and limestone.

Aquifer in the fissured upper Perm intrusive deposits. Granite, aliaskite, granodiorite, granosienite.

Zone of groundwater seepage which coincide with the boundary of artesian water.

Fault zone containing water.

Fault with unknown hydraulic features.

Fault under cover of quaternary deposits

Boundaries between different aquifers and water complexes.

A B Line of hydrogeological cross section.

Observation hole

123
0.9 0.2 Spring Numbers: upper - number of a spring, left - discharge (l/sec), right - dissolved solids concentration (g/l).

5021-N2
2.0/12.0 35.0/0.3 Well Numbers: upper - number according to catalog and index of geological age; left - numerator- discharge (l/sec), denominator - drawdown (m); right - numerator - groundwater depth at steady state (m), denominator - dissolved solids concentration (g/l)

2) ***The aquifer of the modern and upper quaternary alluvial-prolluvial deposits*** ***(apQ_{III+IV})*** has a maximum thickness of 905 m near the mountain's front. This thickness decreases towards the valley; however, the thickness of the layers composed by sandy loam and loamy sands with relatively low permeabilities increases. Groundwater level is located at the depth of 150 to 200 m. This deposits have a high water storage. The discharge capacity ranges from 0.4 to 8.4 l/sec with a drawdown from 1.7 to 2.8 m, respectively. The water is fresh with TDS of 0.2 to 0.9 g/l. The composition is mainly calcium hydrocarbonate, and calcium-sulfate-hydrocarbonate. Water from this aquifer is used as the domestic supply for Almaty and small villages in the surrounding.

3) ***The aquifer of the upper quaternary alluvial-prolluvial deposits (apQ_{III})*** is located within the alluvial fans and in several parts of the near mountain front plains. The aquifer thickness varies from 5 to 50 m. The well discharges are from 1.5 to 13.7 l/sec, with a drawdown between 3.3 to 4.4 m. The discharge of the springs and dug-wells run from 0.02 to 0.10 l/s. Groundwater is mainly fresh with magnesium-calcium hydrocarbonate and sulfate-magnesium-calcium hydrocarbonate components. The recharge into this aquifer is mainly caused by infiltration of surface water (streambed infiltration) and by direct precipitation as well as inflow from borderline aquifers. Groundwater is mainly used to supply agricultural farms and small villages around Almaty.

4) ***The aquifer of the middle quaternary alluvial-prolluvial deposits (apQ_{II}).*** The thickness of the water bearing layers varies from 0.7 - 1.5 m to 35 - 40 m. The dissolved-solids concentration is from 1 to 3 g/l. The chemical combination covers a wide range of compositions. In general, it is sodium, sodium-calcium, and sodium-magnesium type of water. Artesian water is found at depths from 13.7 - 16 m to 150-180 m. Well discharge varies from 4.3 to 40 l/sec, with a drawdown from 2.3 to 15.6 m. The recharge into this aquifer is mostly due to deep percolation from flows along the alluvial fans and to a lesser extent due to direct infiltration from precipitation. Water from this aquifer is used to supply the suburbs and irrigation around Almaty.

5) ***The aquifer of the lower quaternary alluvial-prolluvial deposits (apQ_{I})*** is presented by alternating layers of high a low permeability which are hydraulically connected. The discharge varies from 0.3 to 45 l/sec with a drawdown from 8.3 to 64 m. Artesian wells

discharge only from 1.5 to 5.5 l/sec. The water is generally fresh, but there are few wells with brackish water with TDS between 0.5 to 2.3 g/l. The chemical composition is typical for hydrocarbonate-sulfate sodium-calcium type of water. This aquifer is mainly recharged by inflows (leakage) from the upper aquifers along the mountain front side in addition to the infiltration of precipitation at points where the lower quaternary deposits are exposed at the surface. Water is used for agriculture and, partially, for the Almaty in the neighborhood of the air terminal.

6) ***The aquifer of the lower quaternary fluvial-glacial deposits (fgQ_I)*** has a thickness of tens to 100 m; groundwater is located at depths from 4 - 12 to 100 m. It is elongated in the mountains foot hills where it is recharged by direct inflows from the mountains and by flows emerging from fissured Paleozoic formations in sensitive tectonic zones. The springs' discharges are 0.01 to 2.1 l/sec. Water is fresh to saline with dissolved-solids concentration from 0.2 to 1.8 g/l. The major chemical component of the groundwater is calcium hydrocarbonate.

7) ***The aquifer of the middle-upper Pliocene deposits of Iliisky formation ($N_2^{2-3}il$).*** The thickness of this aquifer is from 1.0 - 1.5 to 12 - 15 m. The springs discharge at rates of 0.1 to 1.2 l/sec, and the wells discharge at 1.4 to 8.0 l/sec with drawdown a from 16.8 to 28.6 m. The artesian water horizons are found at depths ranging from 438 - 980 m to 1996 - 2587 m. They have an affinity of sodium chlorine-sulfate chemical composition. The groundwater recharge of this aquifer originates from the faults along the regional tectonic zones, bordering aquifers, as well as from the direct infiltration of precipitation at points where the deposits of the aquifer are closed or exposed at the surface.

8) ***The aquifer of Neogen deposits (N)*** includes Pliocene and Miocene formations which are exposed at the surface of the mountain and near the mountain section of Zailiisky Alatau. The springs discharge from 0.01 to 1.0 l/sec; the wells discharge from 1.4 to 6.8 l/sec with a drawdown between 15.4 to 28.5 m. The water is used for livestock.

9) ***The aquifer of the lower fissured carbon deposits (C_I)*** is located in the southern part of the study area. It has a high water storage. The springs discharge from 3 to 5 l/sec. Water is fresh with concentrations of dissolved solids from 0.1 to 0.5 g/l. The water type is

typical for calcium-hydrocarbonate compounds. In the zones of tectonic faults the concentration increase up to 1.5 g/l, and the composition changes to a sulfate, calcium-sodium type of water. The recharge of the aquifer comes from the infiltration of direct precipitation. The water is mainly used for livestock.

10) ***The aquifer of fissured middle Proterozoic deposits (PR_2)*** is also situated in the southern part of the study area. Groundwater is located in the upper fissured zone and in the tectonic faults. The discharge from springs varies from 0.05 to 2.4 l/sec. Water is fresh with dissolved solids concentration of 0.3 g/l. The dissolved chemical characteristics are magnesium-calcium & chlorine-hydrocarbonate. Recharge of this aquifer is accomplished by infiltration over the outcrops and inflows from fissured intrusive deposits.

11) ***Aquifer of the fissured upper Perm intrusive deposits ($\gamma\delta P_2$).*** Water is located in weathering fissures and in zones with intensive tectonic faults. With few exceptions, where it varies from 10 to 18 l/sec, the springs discharge from 1 to 2 l/sec. The dissolved solids concentration changes from 0.1 to 0.4 g/l. Recharge of the aquifer derives from precipitation and melting of glaciers and perennial snow firn. Water is used for farms and livestock.

A low permeable aquitard (in the lower sedimentary basin) separates the water table aquifer from the lower artesian aquifers. This aquitard, however, may leak due to discontinuities and a decrease in hydraulic heads due to intensive pumpage.

The aforementioned detailed description of aquifers and geological units suggested that the main avenues trough which the study area was discretized into aquifers and water complexes were spatial variations of geological deposits and water bearing units. This provided the general hydrogeological structure and the hydrologic conditions that prevails in the study area. However, this information served only as a preliminary outline of the hydrogeological structure, not as a solution for the above-mentioned objectives. Hence, additional criteria, such as environmental hydrochemistry, had to be considered to elaborate on deferential water bodies and sub-aquifer sections.

General scheme of groundwater flow in the study area.

The main groundwater flow system in the study area was assessed geologically. These results were combined with those obtained by cluster analysis (more about cluster analyses is presented in following sections). This detailed study was performed in order to properly interpret aquifer discretization and to assign a correct flow pattern within and between the aquifers.

The starting point of the groundwater flow is the Zaiilisky Alatau Mountains, where precipitation reaches 1600 mm/year. Deep percolation from rainfall and snow melt contributes to the mountain front recharge component, and The mountain aquifer reservoir contributes to perennial springs and discharge in mountain rivers. However, a large volume of water is assumed to penetrate into the coarse deposits within valleys and small depressions. The quantity of the inflow depends on factors such as the altitude and exposure of the mountain slopes, the structure and lithology of the deposits, and the depth of erosion channels. The near mountain section, which is located at the conjunction of the foothills and the alluvial valley, connects with the zone of tectonic faults. This fault zone can be either a detention factor or a preferential path for the groundwater flowing from the mountains into the valley. Furthermore, at the alluvial belt, which is formed at the conjunction of alluvial fans, an intensive infiltration of the overland flow was observed. In the alluvial valley a non-homogeneous aquifer system prevails. The groundwater flow is subdivided into sub-aquifers by low permeable or even semi-permeable layers. Tectonic faults and major fissures crossing through the mountains into the valley are presumed to drain the mountain aquifer and lead the groundwater into the coarse deposits within alluvial depressions between the mountains. Depending on the type of water being drained from the mountains, fresh groundwater in the open fracture system or deeper mineralized groundwater, the mountain front recharge can either decrease the salinity of the water in the depressions or increase their mineralization and temperature.

Spatial variations in lithology along the direction from the alluvial fans toward the central part of the valley affect the hydraulic properties of the sediments. The cobblestone-pebble and gravel-pebble deposits at the upper part of the alluvial fan are gradually replaced by sandy loam, loam, and silt deposits at the lower part. As a result, resistance to the groundwater flow increases which leads to an increase of hydraulic heads in the deep sub-

aquifers. This induces groundwater fluxes to be directed upward and leakage or seepage from the lower aquifers to the upper ones.

Variations in specific rates of the groundwater flow in the direction from the mountains toward the Ily River is as follow (in l/s/km): 20-30 at the conjunction of the mountain and the depressions, 500-600 at the periphery of the alluvial fans, 150-200 at the flood plane, and 10-20 at the lower river valley. An accurate evaluation of the above-mentioned parameters is a necessary precondition for an assessment of potential inflow into the aquifer system.

Major potential sources for groundwater pollution in the study area.

The main sources of pollution in the study area are industrial plants and factories, municipal services of Almaty and its vicinity, transport enterprises, and agricultural farms around the valley.

Industrial plants and factories usually have old or inappropriate sewage and cleaning systems. They periodically discharge pollutants into earthen tanks, rivers and ponds as well as gases into the atmosphere. Due to common climatic inversion of air temperature, the pollutants from the atmosphere re-precipitate with rain and snow, infiltrates into the top-soil. and later percolate towards groundwater. The ejection into rivers is particularly dangerous at the southern part of the study area where the coarse alluvial fans are located and runoff infiltrates rapidly into shallow groundwater layers. Aside from periodical discharge, the industrial enterprises also generate such permanent sources of pollution as open storage of contaminants and products, piles of coal and ash near the power plants and the water heating stations, and the ejection of gases and smoke into the atmosphere. The aforementioned potential sources of pollutants are considered point sources over the top aquifers.

Municipal facilities exert an essentially negative effect on the quality of the groundwater reservoir. Losses from sewage and water supply systems are significant. Sewage water from the Almaty City and its suburbs are discharged outside the study area. However, leakage occurs along the sewage pipe lines. Some parts of the city and its suburbs are not connected to the central sewage system. The smoke ejection from heating systems

during winter significantly contaminates the atmosphere and groundwater through precipitation. Another source of major groundwater contamination is piles of waste storage, many of which are located in the study area. Leakage from the sewage system is considered a line source of potential contamination.

Transport facilities contaminate groundwater through the uncontrolled disposal and leakage of fuel and oil products at the service sites. Also, particles emitted by the exhaust gases precipitate on soil surface or snow during winter, and then are flushed into groundwater. There are periods when the atmosphere above Almaty City is covered with heavy smog for very long time. A significant part of this smog is formed by exhaust gases. Contaminants from the atmosphere precipitate on the soil with rainfall or snow and then infiltrate into the subsurface water. The latter has a very strong effect on groundwater quality in the central part of the study area. Transport facilities are also considered as point sources in the hydrological setup of the model. Figure 3 indicates the main sources of pollution by oil products and their concentration in the upper phreatic aquifer.

Agricultural farms in the suburbs contaminate the area by pesticides, herbicides, and fertilizers during irrigation and rainfall. Biogenic materials from livestock ranches also infiltrate into the subsurface and eventually contaminate groundwater. Note that the most dangerous sources of pollution are those located in areas with high rates of preferential recharge. In these cases, the contaminants are widely spread within the groundwater system and penetrate into significant depth.

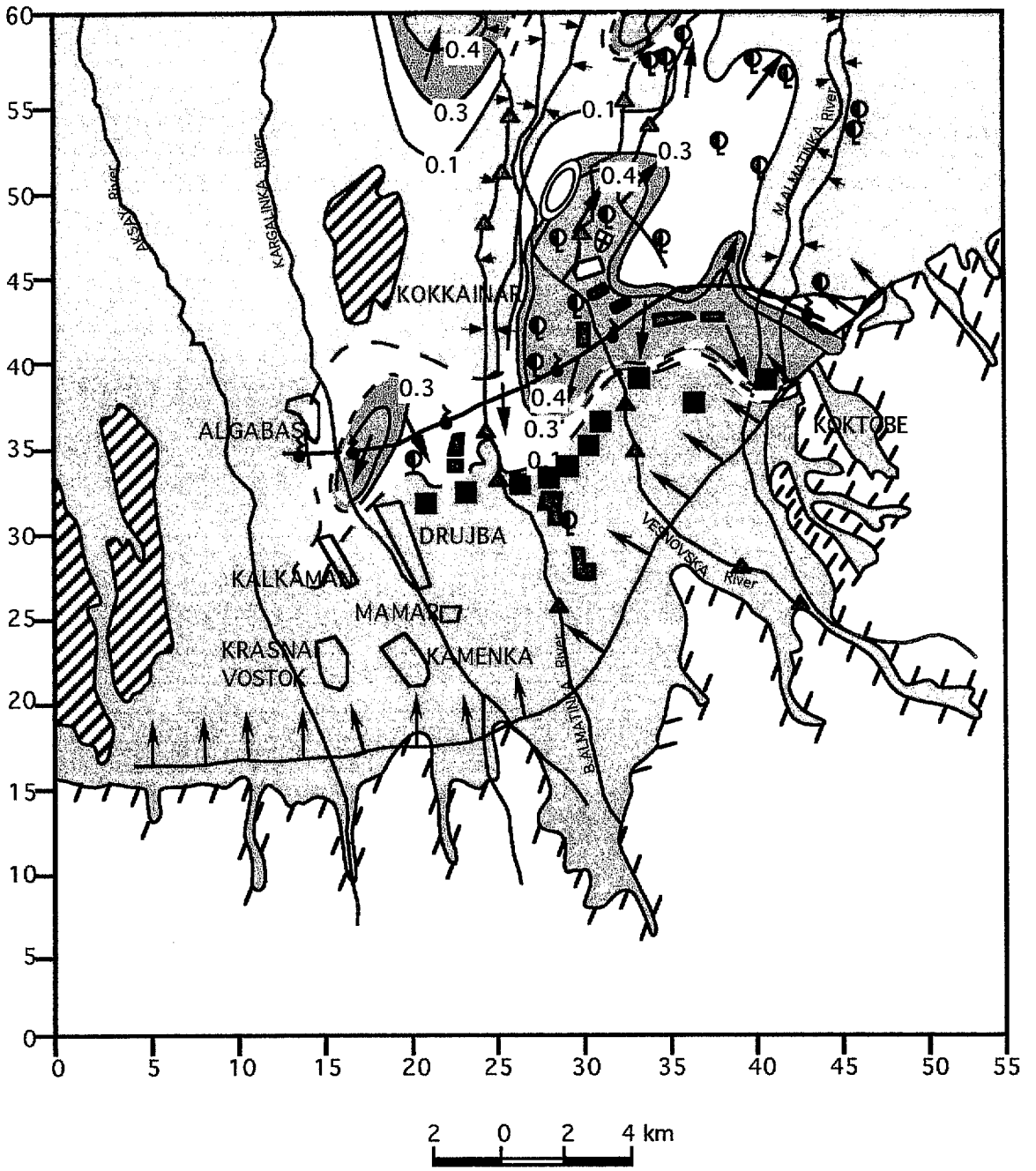

Fig. 3 Map showing levels of pollution by oil products over the phreatic aquifer in April 1992 (The legend is attached in the following page)

Legend for Fig. 3
Groundwater contamination by oil products

Area with low concentration of oil products (up to 0.1 mg/l) and noncontaminated groundwater

Area slightly contaminated with concentrations less than the admitable level (from 0.1 to 0.3 mg/l)

Contaminated area with concentrations from 0.3 to 0.4 g/l

Contaminated area with concentrations from 0.3 to 0.4 g/l

Special symbols

0.1 Contours of equal concentrations (isochlor) of oil product in the groundwater (mg/l)

Direction of contaminated groundwater flow

Water pumping stations of the Almaty City

Part of a river with streambed infiltration

Part of a river which drains groundwater

Border below which groundwater discharges

Observation points of river water quality

Remnants (relicts) of dry low quaternary deposits

Outcrop of bare rocks deposits reaching the surface

Major sources of groundwater contamination by oil products

Location of enterprises of road and railway transport

Petrol stations

Dumping sites of ashes from electric station (TEC-1)

Domestic dumping site

Oil storage (old)

Enterprises which contaminate or are potential sources of contamination by oil products

Criteria for separating the study area into subaquifers and into compartments within each sub-aquifer

For separating the study area into subaquifers (layers) and compartments (mixing cells) in each layer, the following factors were taken into account:

a) The general law of natural groundwater flow conditions as well as imposed conditions affected by anthropogenic activities. Regions of groundwater recharge, discharge and transient flow were delineated. Studying regions of groundwater recharge and discharge suggested by dominant factors prevailing during natural or man-made aspects of the groundwater flow system.

b) The impact of tectonic faults on the hydraulic connections between water-bearing units and flow of groundwater between sub-aquifers were estimated so as to note possible interaction between mixing cells.

c) The hydraulic properties of the water-bearing layer were one of the most important factors taken into account for separating the study area into layers and cells, i.e., the location of geological units with high, low, and very low permeability.

d) Preliminary results of groundwater flow simulation using hydrodynamic models were used to justify the space configuration of cells.

e) Qualitative and quantitative characterizations of the pollution sources of possible input fluxes were accounted for.

The basic geological structure consists of seven elements: (a) high mountain terrain (Zailiisky Alatau); (b) upper alluvial belt; (c) coarse sediment with sands; (d) sandy loam lenses and gravel; (e) mud flows and alluvial fans; (f) lower sedimentary basin; (g) inter-fingering of sand, gravel and silt, including lenses of silt and clay. All the above-mentioned geological features were identified in order to elaborate on the regional flow system.

A multilayered aquifer structure has been identified. The top phreatic aquifer provides high discharge from several water bearing layers. Potential contamination into this aquifer is assumed from oxidized and polluted precipitation, septic tanks, leakage from local and municipal sewage system, and point leakage from industrial waste storage facilities.

Low permeable aquitard (in the lower sedimentary basin) separates the water table aquifer from the lower artesian aquifers. This aquitard, however, may leak due to discontinuities and a decrease in hydraulic heads in aquitards due to intensive pumping.

Based on existing information and calibrated hydrodynamic models, some hydrological features within each aquifer were assessed. Based on water balance modeling, possible contribution from the fractured granitic aquifer was estimated at 10% to 20%. This source of recharge may be represented by several thermal springs and by the Almaty Lake.

Hydrological maps, hydrogeological cross-sections, piezometric head distribution in all sub-aquifers, location of wells, temporal variations in pumping distribution policy, hydrochemical and hydro-isotopes maps all were processed. They are now available in 1:50,000 scale. These maps served as a basic tool for processing the hydrogeological information.

As a result, the study area was divided vertically into five sub-aquifers. In general, the aquifer units are sub-divided: from groundwater table till a depth of 20 m; from 20 to 50 m; from 50 to 150 m; from 150 to 500; and from about 500 m to 800 m below surface. A detailed schematic hydrogeological cross-section was presented in Fig. 4. The blue arrows represent the general flow pattern between water-bearing layers and the configuration of cells as depicted in four geohydrological cross-sections. Numbers within red circles represent the main cells as introduced into the numerical model. Further details about symbols and other types of arrows are described in the attached legend. In general, the boundaries between levels are associated with a pronounced, semi-permeable layer of sandy loam. However in some sections the boundaries cross coarse permeable sediments. This was based upon a hydrochemical classification of groundwater (uniformity of groundwater quality) where the geological information was rather general.

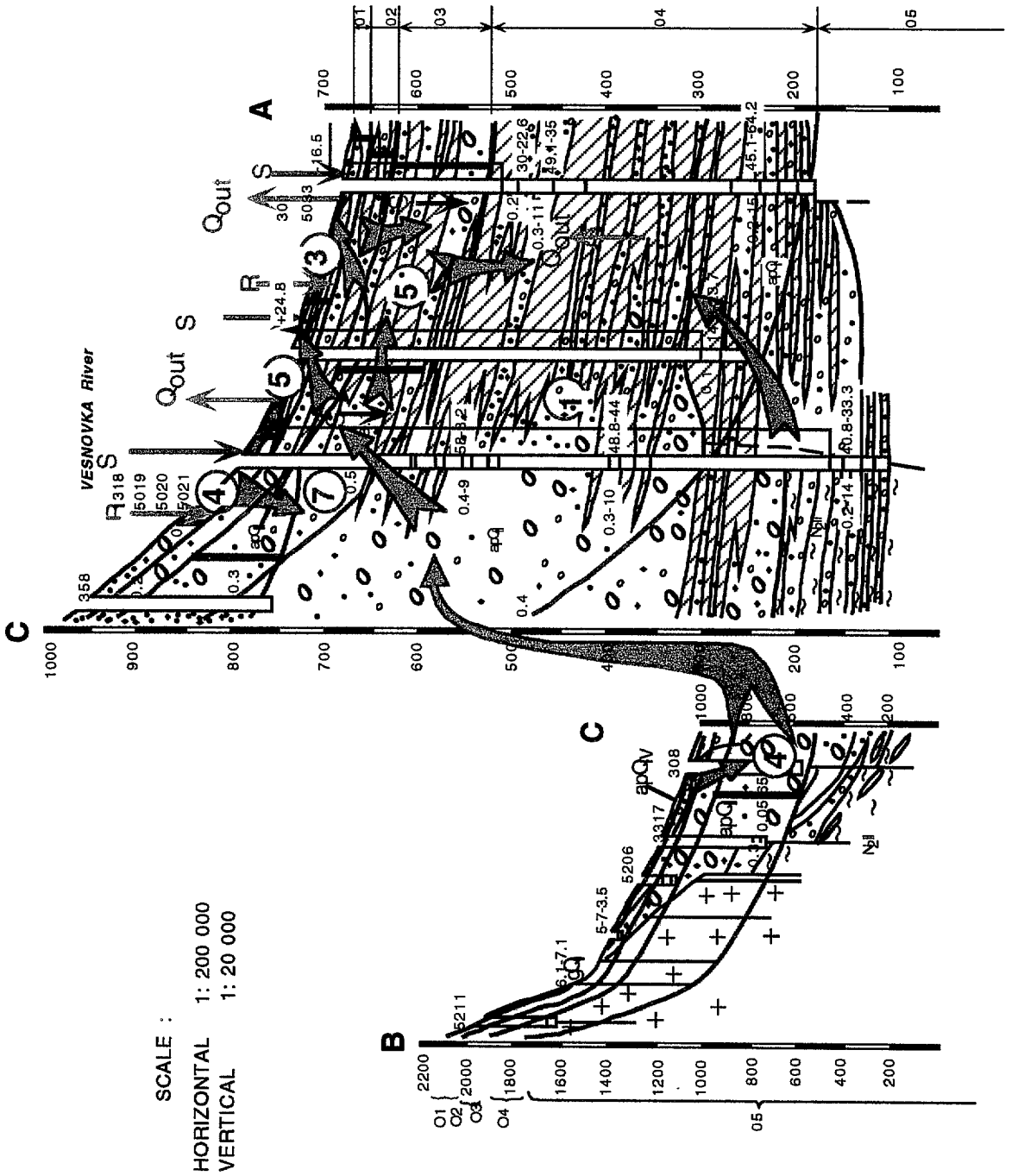

Fig. 4 Hydrogeological cross section along line A-B in Fig. 2
Horizontal scale: 1:200 000 , vertical scale 1:2 000
(The legend is attached on the following page)

Legend for Figure 4

Sands

Pebbles

Boulders

Loamy sand

Sandy loam

Granite porphyry, granite, granodiorite, syenite, diorite

01 - 05 Layer number

5 Cell number

Border of layers and cells

Direction of groundwater flow

R Potential streambed infiltration

S Potential source of pollution

Q_{out} Groundwater outflow

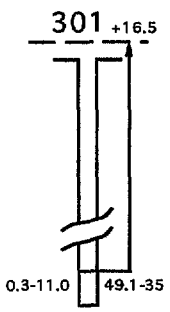

Well: Digits: top - number in the catalog. Arrow corresponds to hydraulic head. Digits near arrow - absolute piezometric level [m].
On the left: first - dissolved solids concentration [g/l], second - water temperature [^{o}C];
On the right: first - discharge [l/sec], second - drawdown [m].

Classification of aquifer units with multi-variables cluster analysis

As a result of the above-mentioned hydrogeological evaluation, firm boundaries for the modeled basin were assigned with precise geographical and hydrological properties. The collected hydrochemical data were employed in a multi-variable cluster analysis. The aquifer in the Almaty basin was divided into five levels (Fig. 4). For that, piezometric heads as well as the degree of salinity were used as preliminary measures for aquifer separation. Each level represents an aquifer with its own characteristics; however, it seems that levels might be interconnected by leakage occasioned by vertical piezometric gradients. As mentioned before, additional information, such as hydrochemistry and isotopes, were used to further elaborate on aquifer classification.

The linear correlation between types of water from wells, rivers, pollutants and springs is represented by a dendogram in which closely related bodies of water are situated in closer relative distances, ranging from 0 to 2000. Incomplete hydrochemical information from the deep fifth level allowed us to subdivide the aquifer into compartments only in the top four levels. Dendograms and associated maps of sub-clusters for the four top levels are provided with the same identification numbers as used in the chemical tables (NUM) given for each level (Appendix I). Later, a schematic cell configuration was established based up on results obtained from cluster analyses and physical hydrological properties. In the following correlations, a dendogram, a map with posted sub-clusters, and an associated schematic flow pattern and cell configuration are presented for each of the four levels. Based up on a cluster analysis of macro and micro-components, as well as of pollutants absorbed in the groundwater, each level was separated into distinguished compartments (mixing cells). For each sub-aquifer (levels 1 to 4), a possible flow pattern among cells has been suggested which is presented in flow diagrams. In each diagram, cross relations between sub-aquifers is also illustrated.

In the sub-aquifer Level 1 (Fig. 5), cluster 0 represents water samples collected along three ephemeral streams running from the Zailiisky Alatau Mountains across the Almaty Basin. In this cluster, water sample # 54 was classified originally as a source of pollution, but it definitely is not. Seepage from streams and runoff samples appears as three distinguished lines in the corresponding map as illustrated in Fig. 6. Cluster 1 includes all the sources of potential pollution such as water tanks with industrial effluents and all areas with piles of surface pollutants. One heavily polluted well (# 2) is situated within this

cluster. It is also posted in Fig. 6. In the latter map, pollutant sources are not included, but they were identified and located on a detailed (1:50,000) topographic map (not included in this report) and later included as potential input parameters in the numerical model. Results from the hydrochemical cluster analyses together with hydrogeological and geophysical information were combined to suggest bodies of groundwater that form homogenous hydrologic compartments (as illustrated in Fig. 6). Aside from numbers 1 & 5, in all clusters observation wells are associated with sources of pollutants distinguished by black dots (Fig. 5). This might be an indication of the pollution scheme illustrated by [s] in the schematic cells pattern in Figure 7.

Only three wells have been identified as part of the second sub-aquifer (Level 2). In Fig. 8, these wells (#1, 12, & 21) form a distinguished cluster, but one heavily associated with a group of pollutants (cluster 2). Cluster 0, which here again represents sources of stream-bed infiltration, appears to form an isolated cluster which includes three sources of pollutants. Cluster 3 consists of 4 sources of potential pollutants which are all heavily saline (TDS from 680 to 1240 mg/l) and contain heavy elements such as Cu, Zn, As, and oil. Figure 9 shows the geographical position of the three wells between the sources of mountain front recharge and Almaty City together with the associated sources of surface pollution. Figure 10 illustrates a possible flow pattern across level 2 with downward input from level 1 and deep percolation into level 3.

The dendograms for levels 3 and 4 consist of wells only (Figures 11 & 14, respectively). These sub-aquifers are the major production layer which supplies groundwater to Almaty. A striking phenomenon becomes apparent in the dendogram for Level 3: several sub-clusters show various degree of pollution. For example, cluster 4 includes wells with phenol, wells in cluster 6 contain nitrate, and wells in clusters 3 to 7 are polluted by oil. This might be attributed to high exploitation rates of these production wells that have induced a significant decrease in the piezometric head. As a result, contaminated groundwater from the upper levels percolated into level 3. Unfortunately, study with stable isotopes neither confirm nor reject this hypothesis. Associated compartments within each level as depicted from both hydrochemistry and geophysical surveys are presented in Figures 12 and 15 for levels 3 and 4, respectively. Lack of sufficient observation holes penetrating into these levels eliminates the possibility of drawing precise boundaries between cells. The flow pattern and the cell configurations for levels 3 and 4 are illustrated in Figures 13 & 16, respectively. The only potential input into level 3 comes via deep mountain front recharge.

Output occurs mainly via massive pumping and natural leakage into level 2. Level 4 is also replenished via deep mountain front recharge. However, due to heavy pumping, it may leak into both levels 3 and 5. Outflow due to down-gradient fluxes should be also considered.

An interconnected flow pattern between levels 3 & 4 is presented in Figure 17. Due to lack of sufficient information for the 5th level, this aquifer unit is considered as a source of potential inflow into cells within level 4, and it will not be included in the integrated modeled aquifers. The schematic flow pattern of the alluvial aquifers as obtained from the multi-variable cluster analyses are in a close agreement with the general flow scheme suggested for the Almaty basin by Sidhikov et al. (1993) and Akhmedsafin (1980).

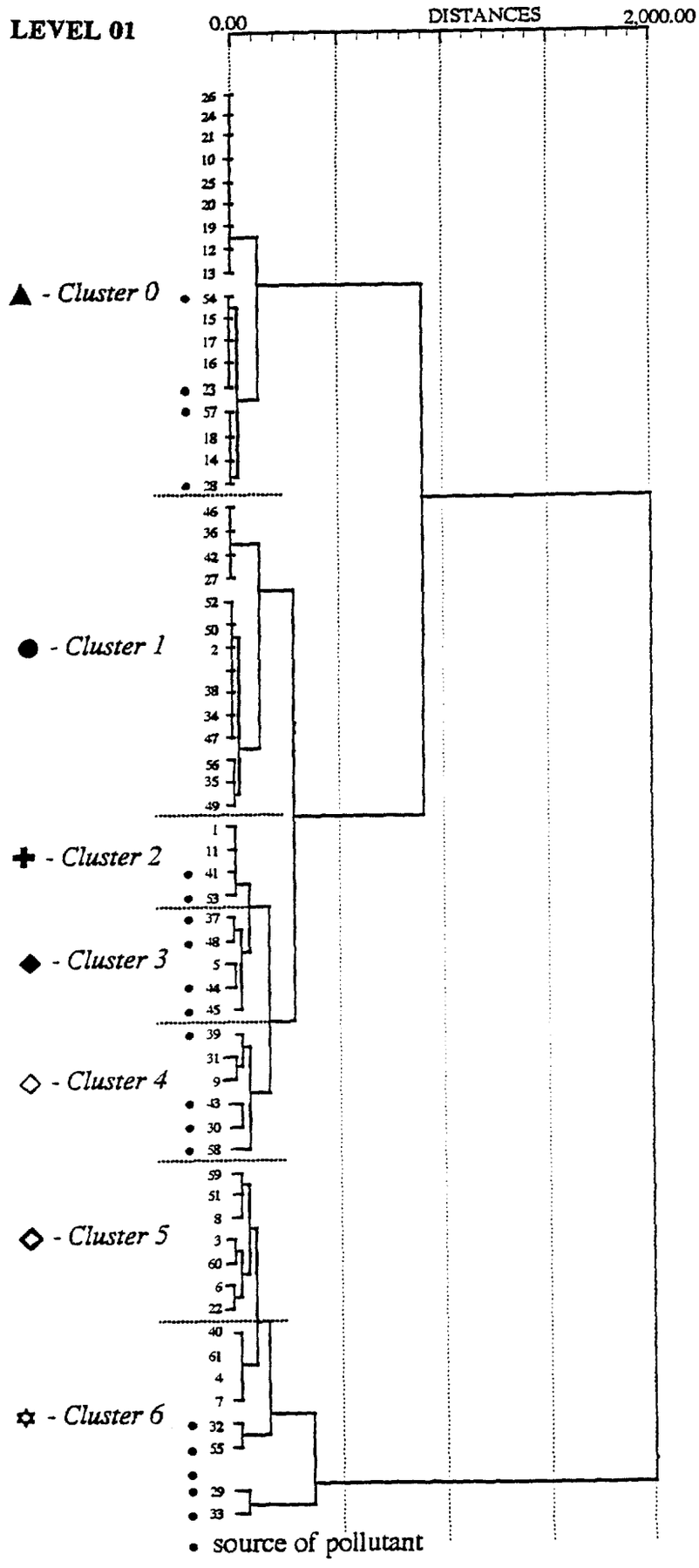

Figure 5. Dendogram from cluster analysis for level 1.

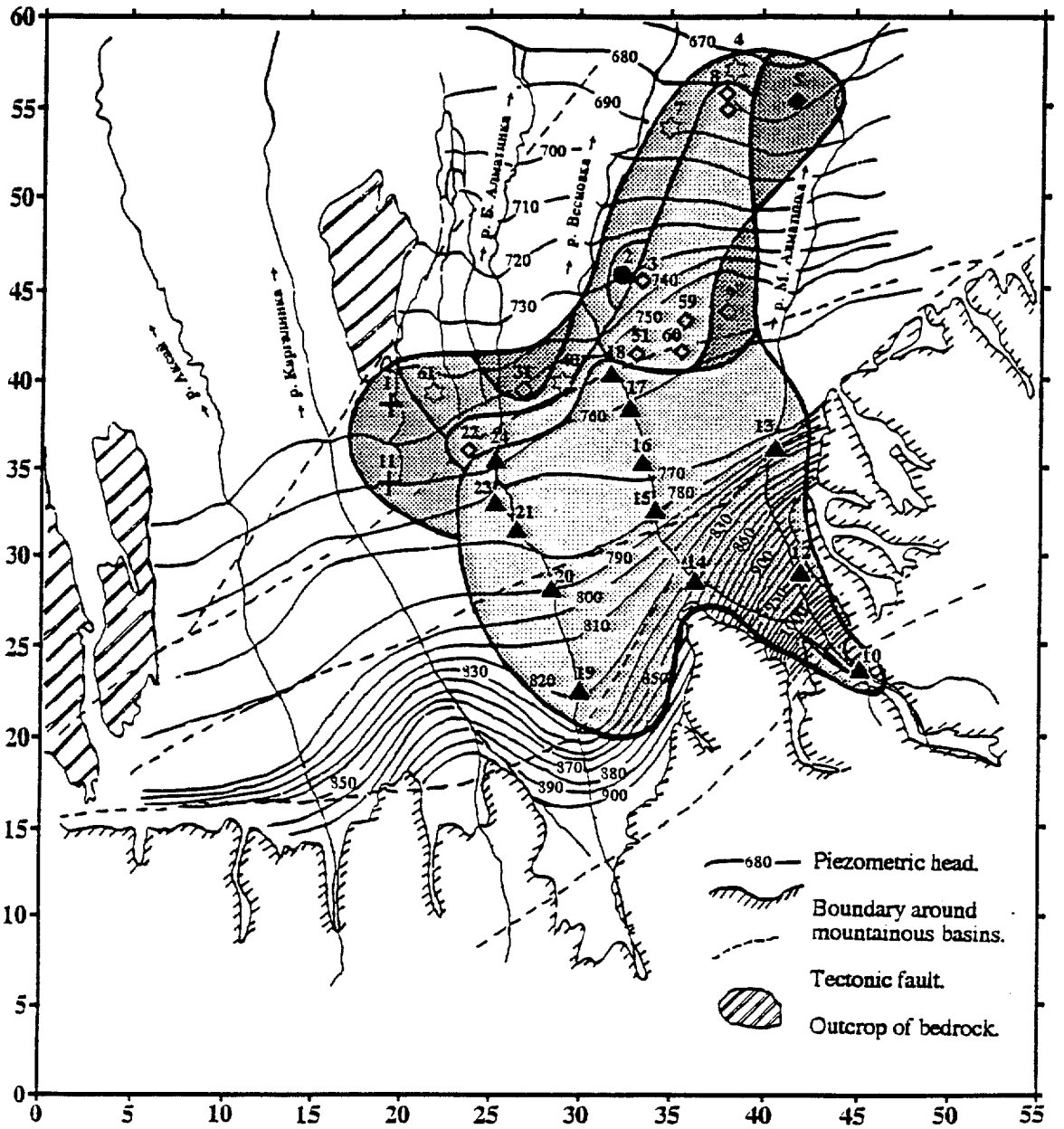

▲ - Cluster 0 ● - Cluster 1 ✚ - Cluster 2

◆ - Cluster 3 ◇ - Cluster 4 ◇ - Cluster 5

☆ - Cluster 6

Figure 6. A map of sub-clusters obtained for level 1.

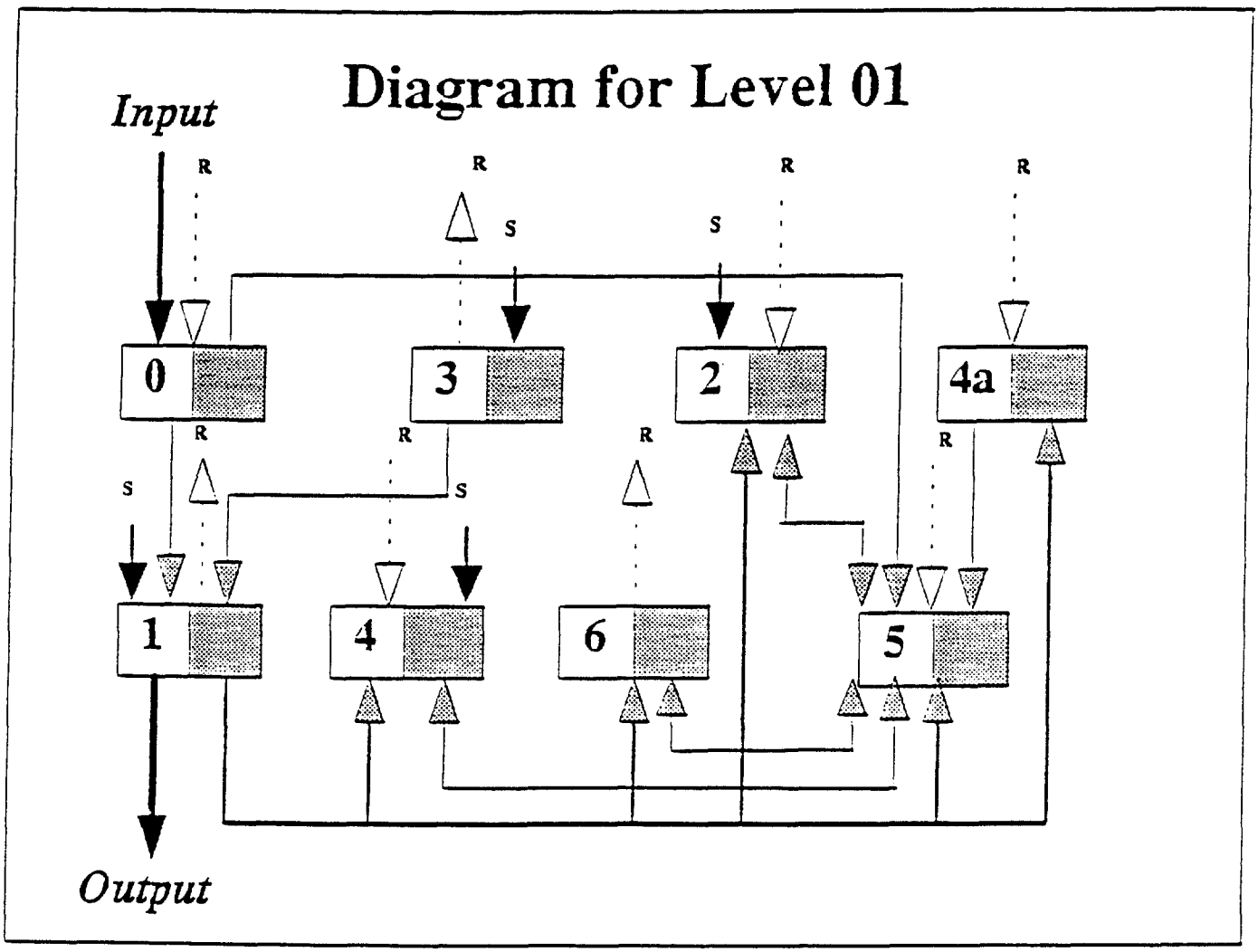

Figure 7. A schematic flow pattern and cells configuration for level 1:
(R) designates potential stream bed infiltration
(S) potential source of pollution.

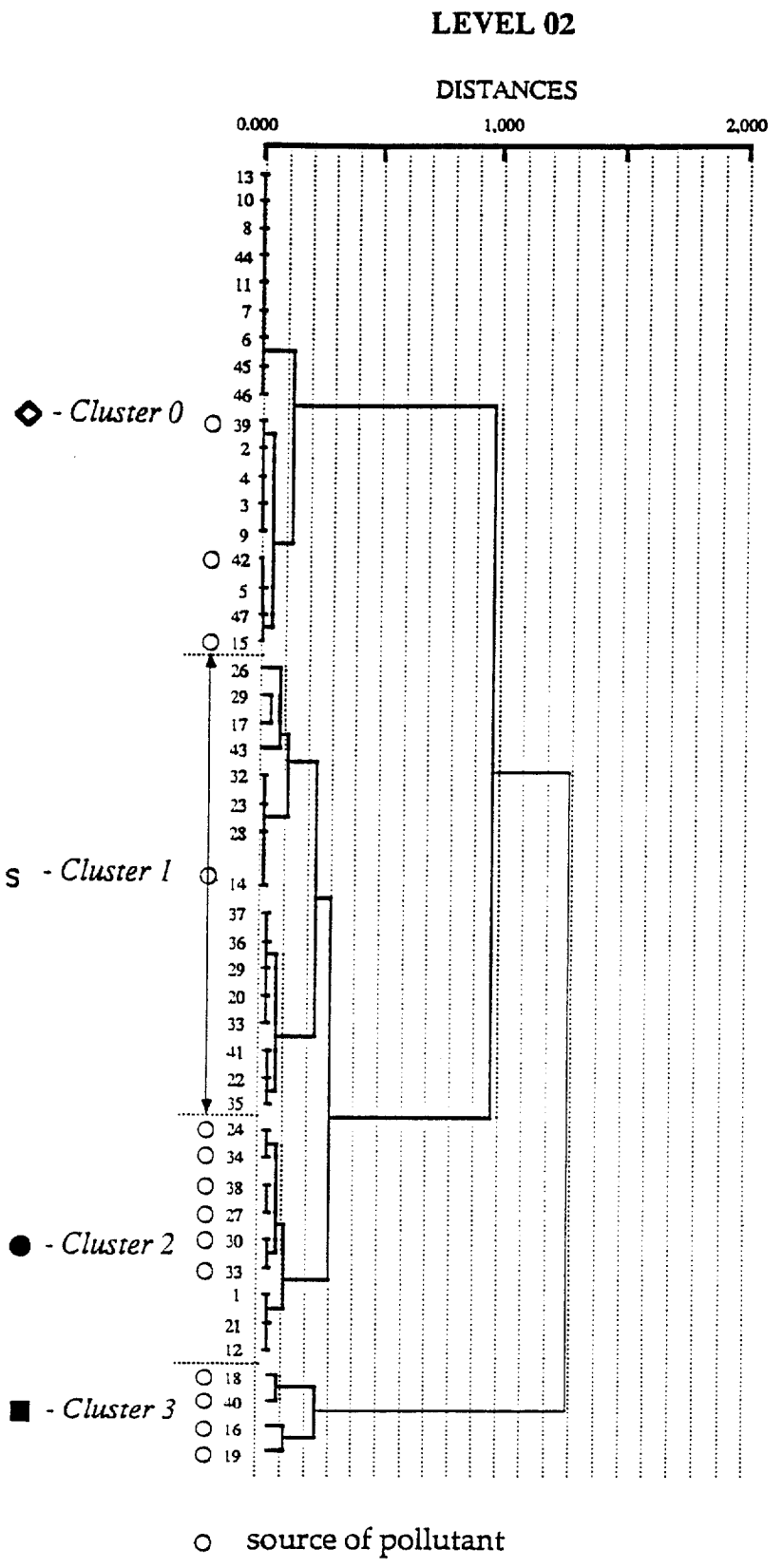

Figure 8. Dendogram from cluster analysis for level 2.

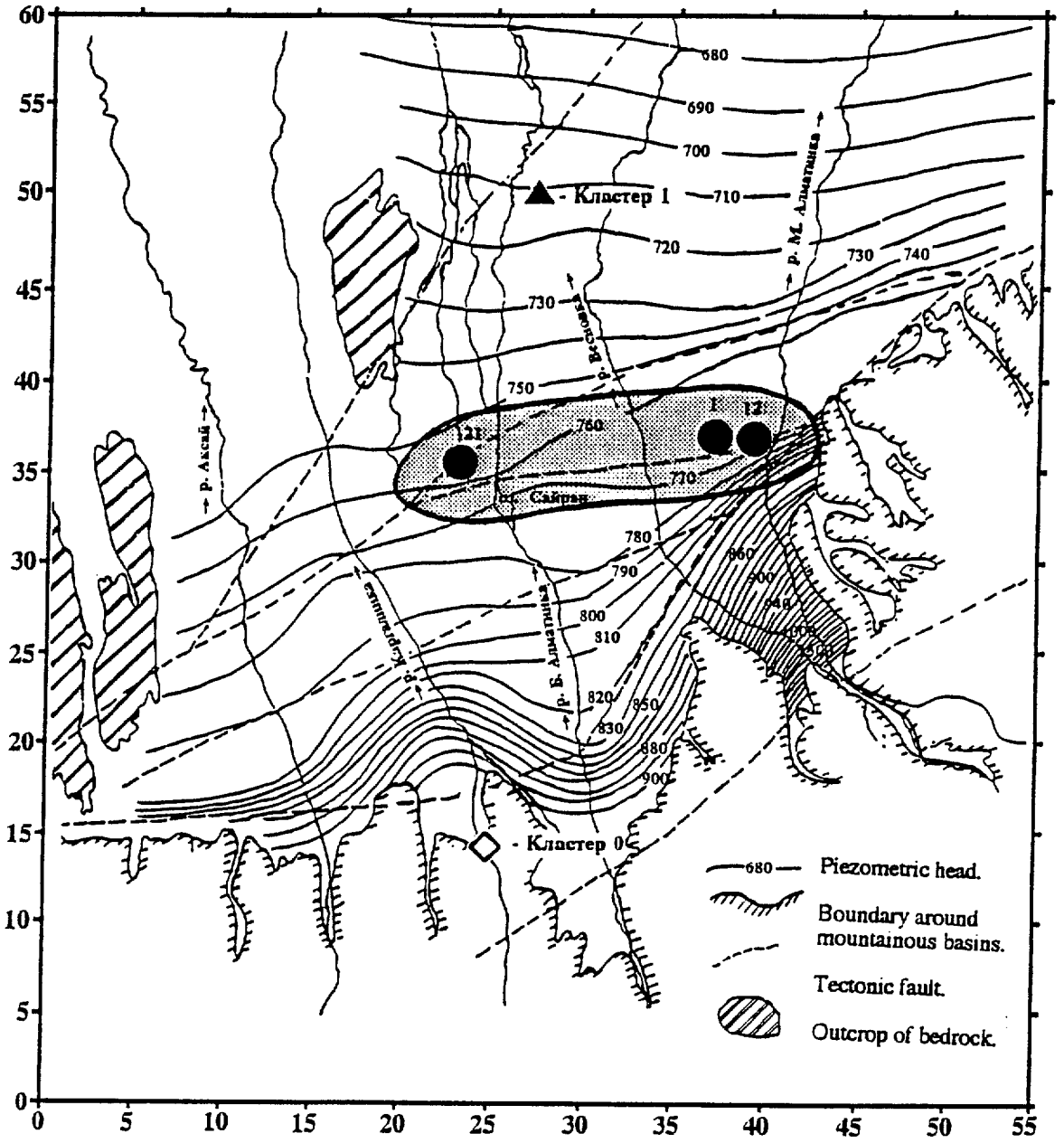

◇ - *Cluster 0* ▲ - *Cluster 1* ● - *Cluster 2*

Figure 9. A map of sub-clusters obtained for level 2.

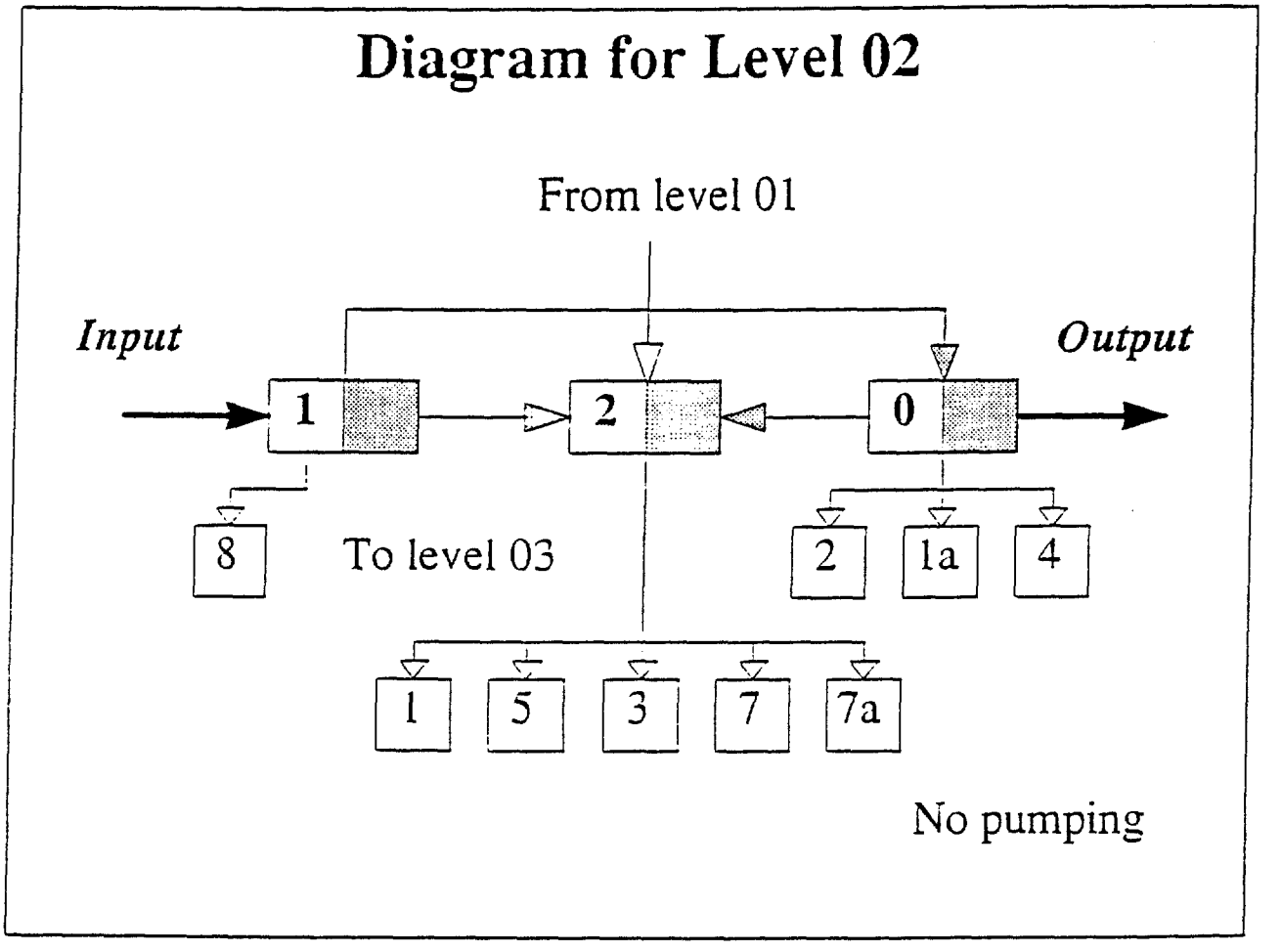

Figure 10. A schematic flow pattern and cells configuration for level 2.

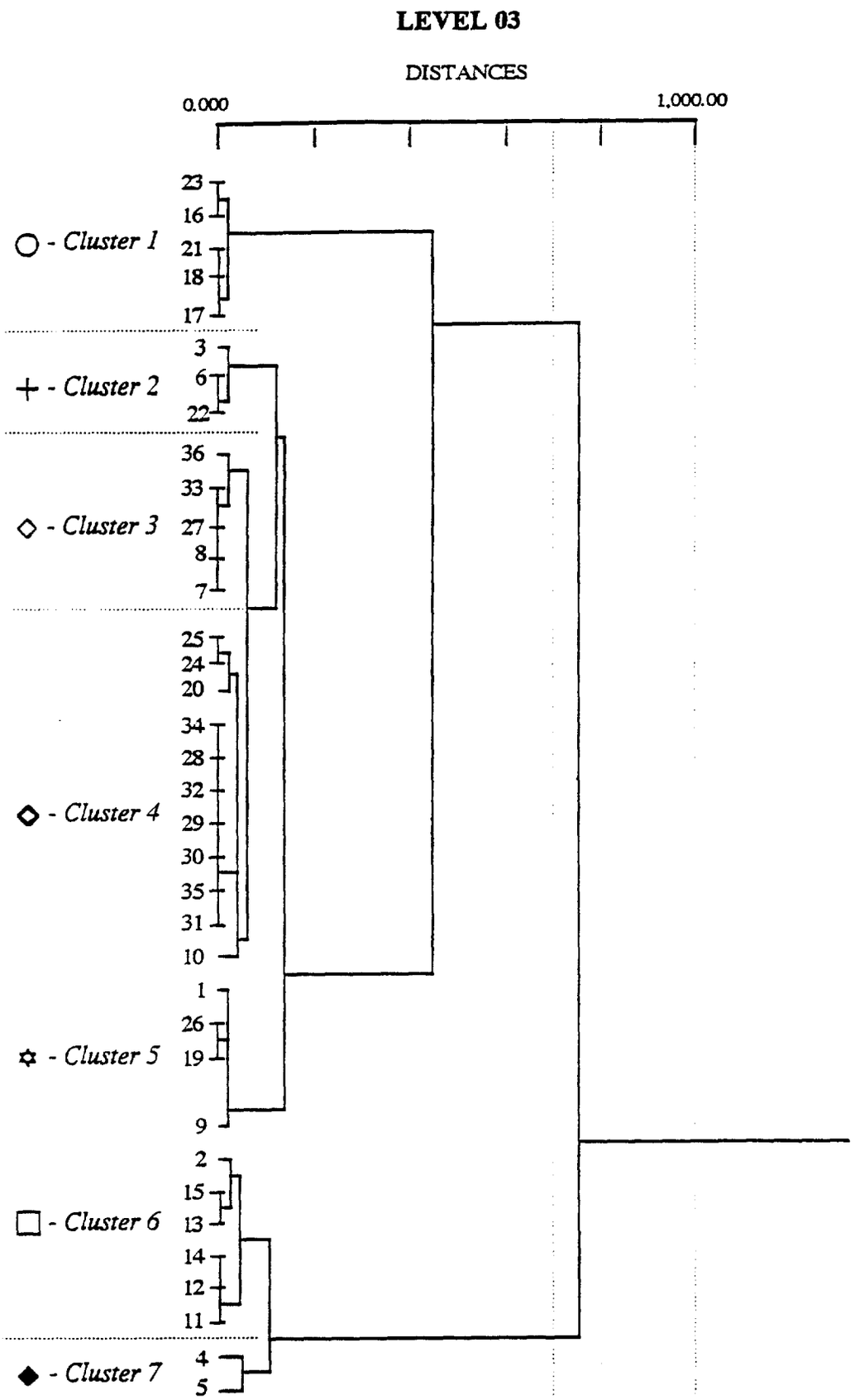

Figure 11. Dendogram from cluster analysis for level 3.

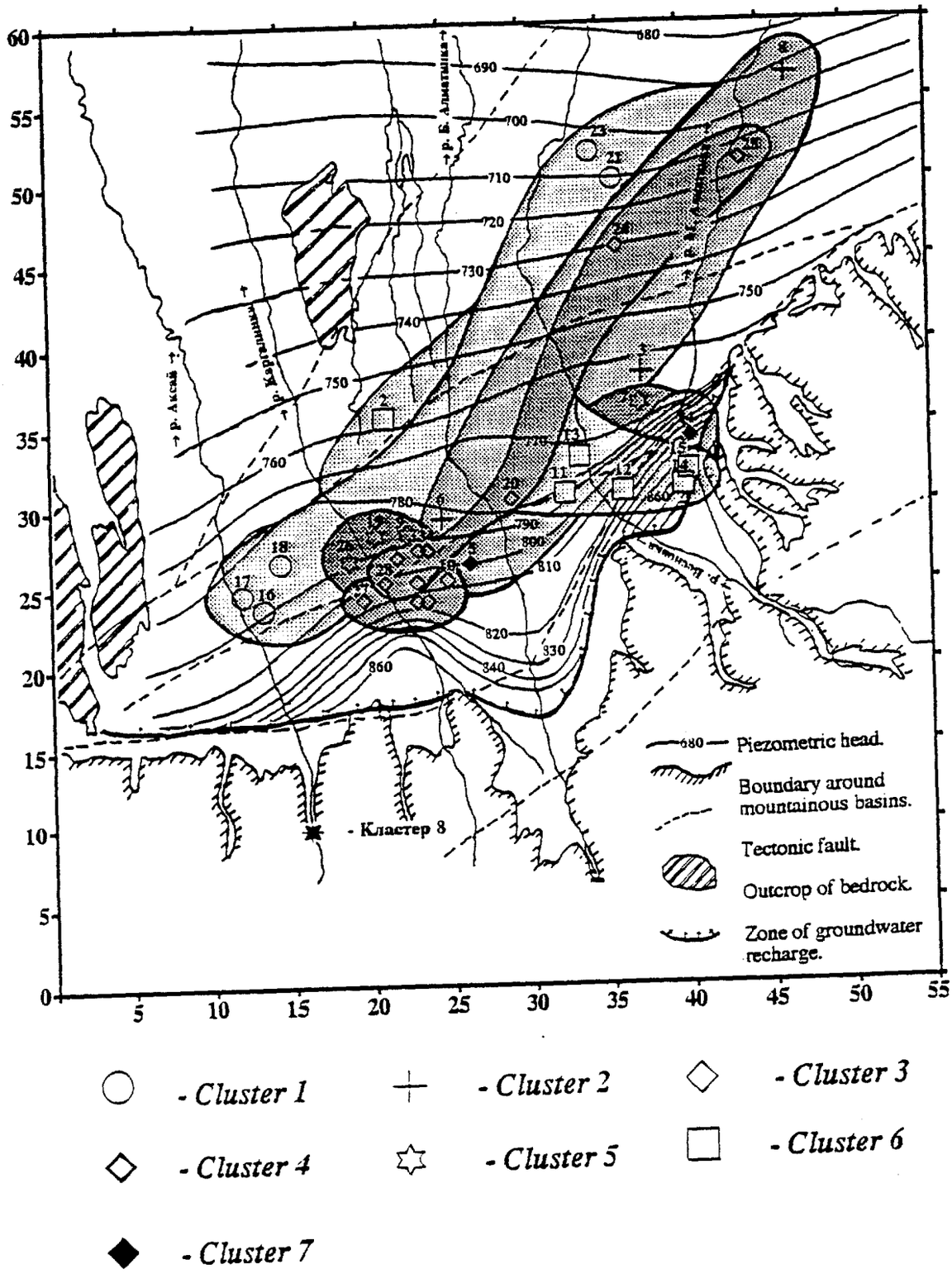

Figure 12. A map of sub-clusters obtained for level 3.

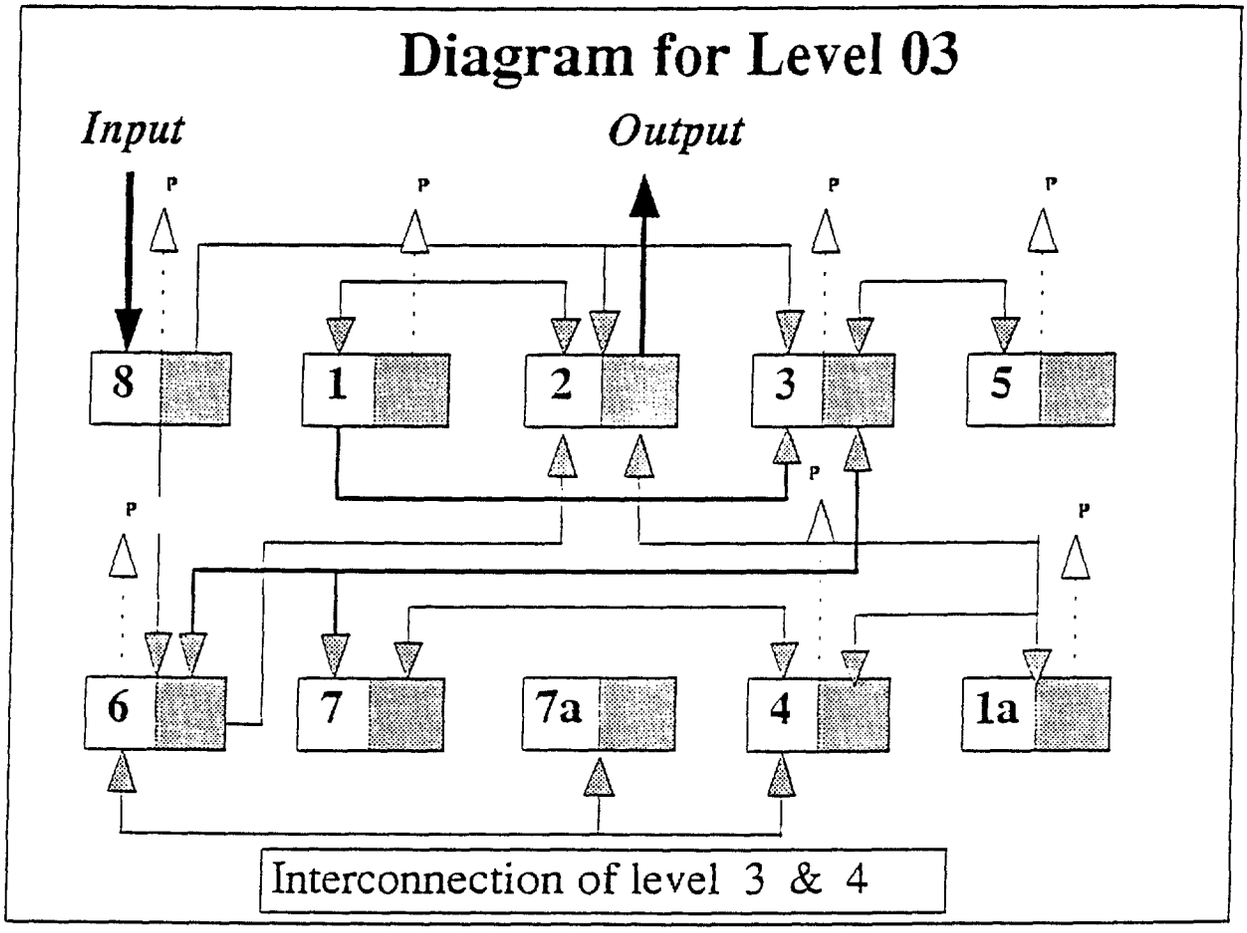

Figure 13. A schematic flow pattern and cell configuration for level 3.

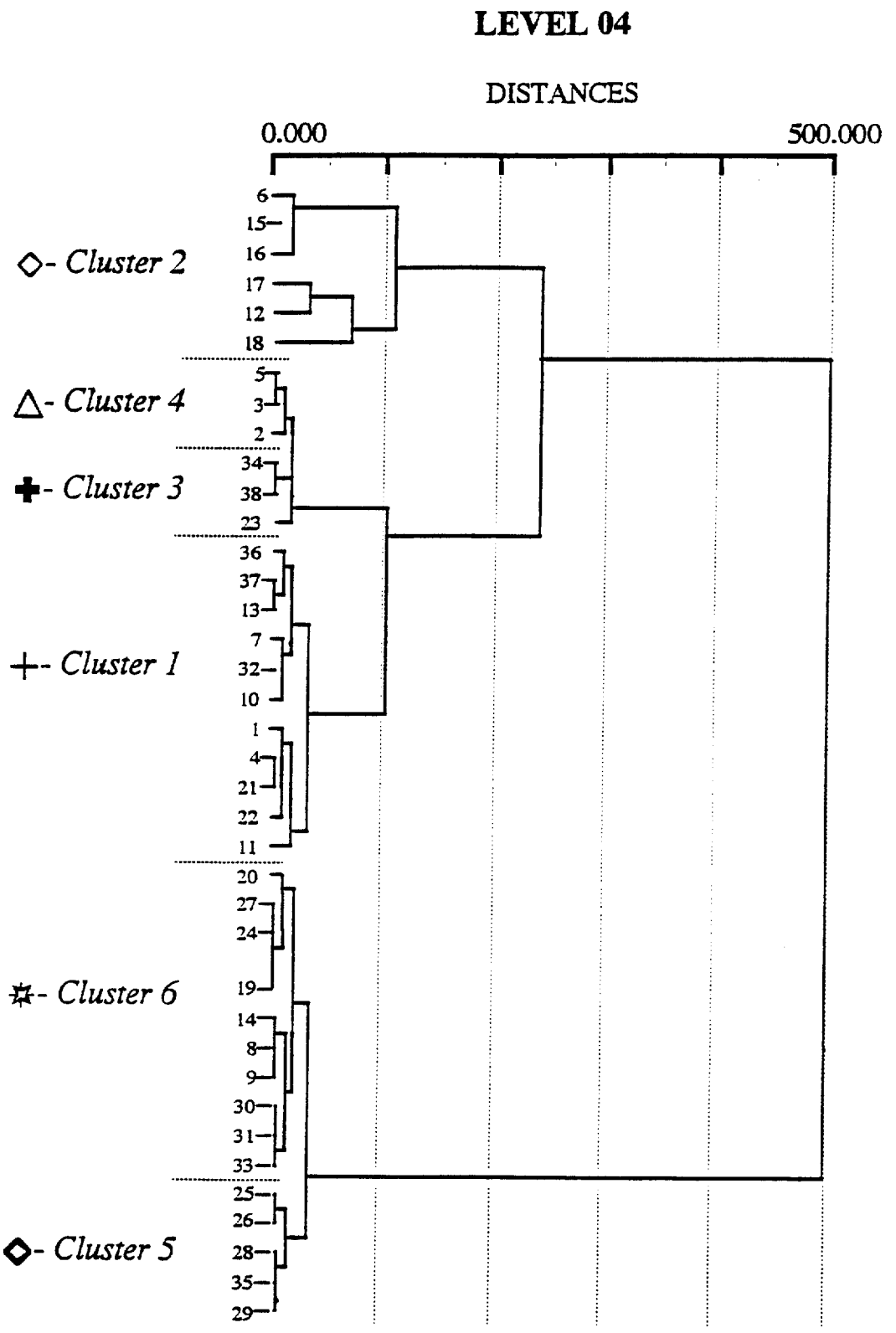

Figure 14. Dendogram from cluster analysis for level 4.

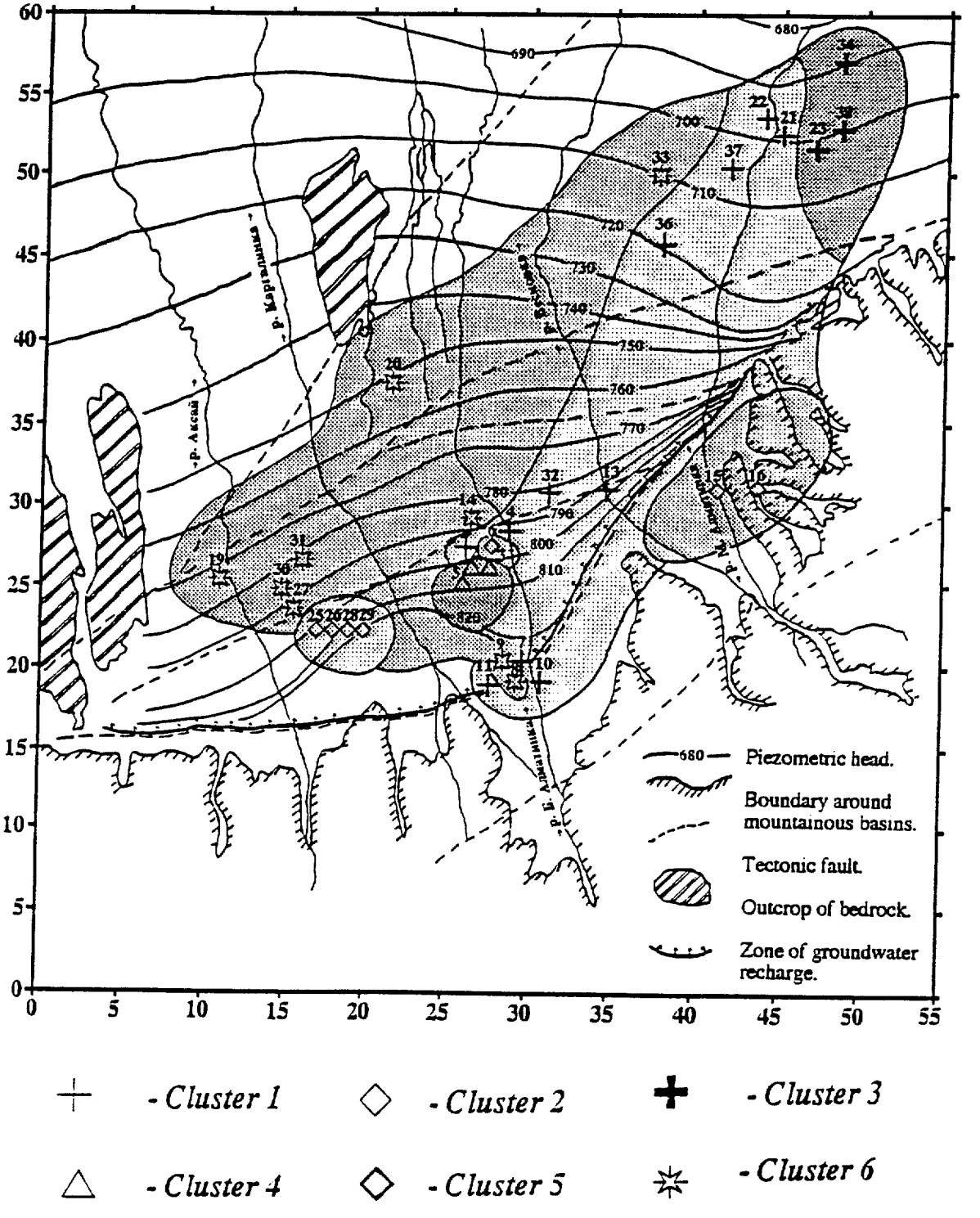

Figure 15. A map of sub-clusters obtained for level 4.

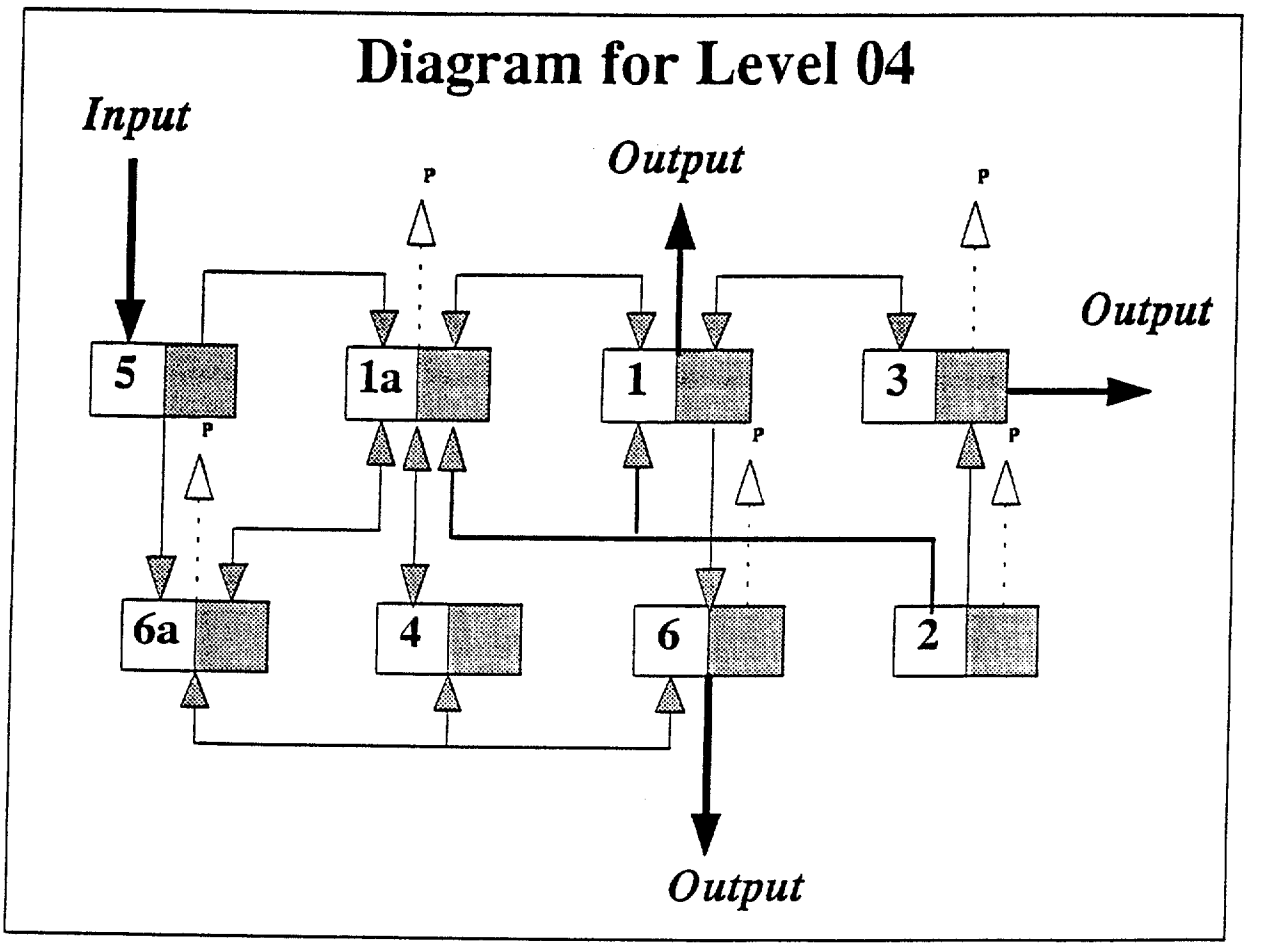

Figure 16. A schematic flow pattern and cell configuration for level 4.

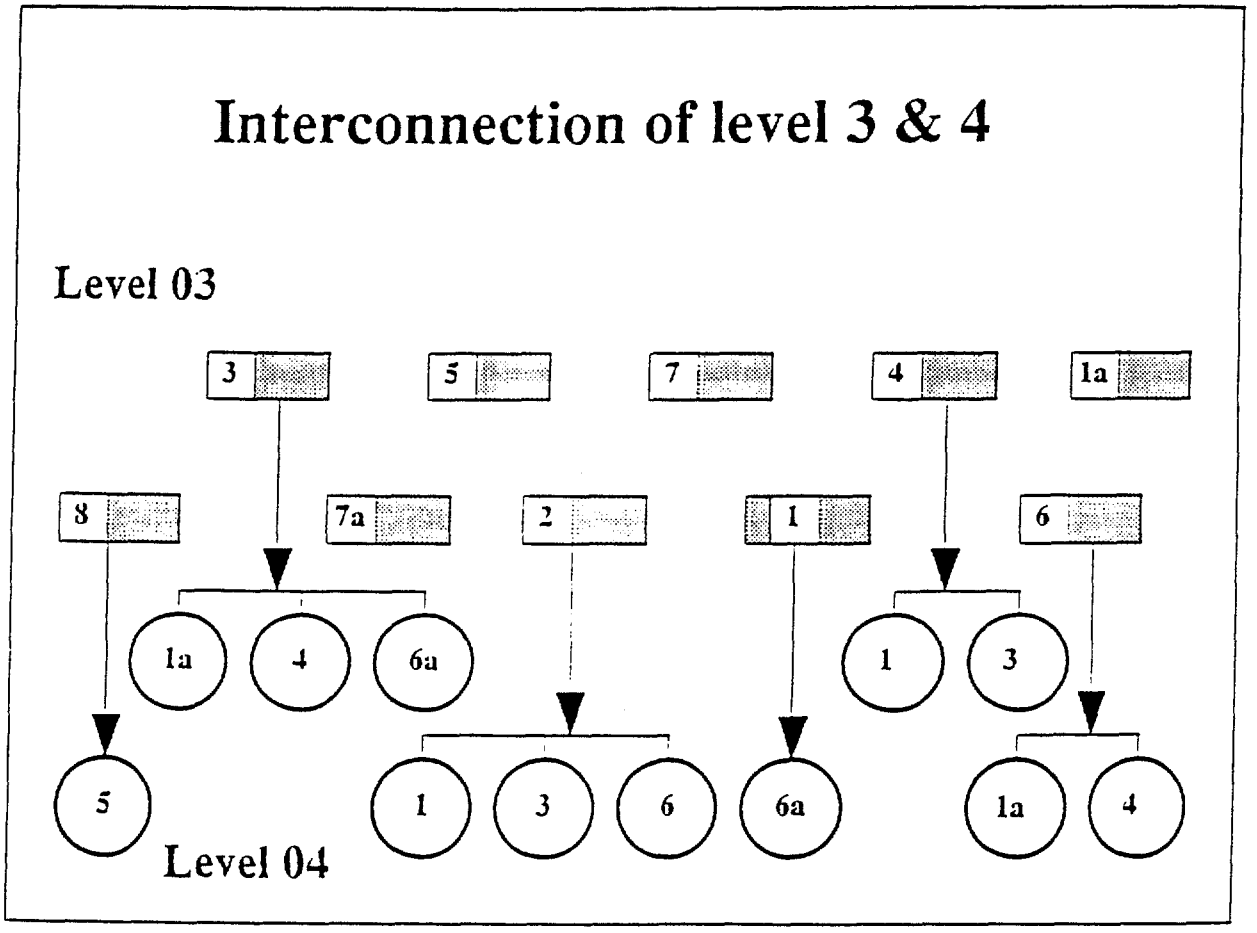

Figure 17. A schematic flow pattern describing leakage between cells in levels 3 & 4.

Description of the mathematical algorithm

A model for a quantitative assessment of recharge into an alluvial arid basin by a mixing cell approach was originally presented by Simpson and Duckstein (1976), Campana and Simpson (1984), Adar et al. (1988), Adar and Neuman (1988) and Kirk and Campana (1990). This type of model requires an initial information of the flow pattern into and within the aquifers and a knowledge of the spatial distribution of one environmental tracer over the modeled basin. For any given cell, the state of its concentration is expressed by a weighted average or by mixing the dissolved tracers transported across the cell's boundaries. Assuming a conservation of mass, recharge values (flows across a cell's boundaries) are estimated by an iterating process which calibrates water fluxes to the observed concentrations of the involved tracers. Discrete-state compartment models which rely on one tracer cannot yield a unique solution, and they are heavily dependent on the setup of the flow system. Adar et al. (1988), Adar and Neuman (1988) developed a multi-tracer mathematical model for a small arid basin in Arizona. It is also based on the mixing cell concept but enables to assess a more reliable solution. This method was further developed for non-steady annual seasonal fluctuations by Adar and Sorek (1989). It uses hydrochemical and isotopic data to calculate fluxes of recharge into a complex alluvial aquifer.

The model is based on the following assumptions:

- The alluvial aquifer can be divided into homogeneous cells in one, two or three dimensional flow patterns. This implies that for every environmental tracer, a unique value can be assigned to each cell.
- All water bodies entering the cell are mixed instantly, so that the spatial distributions of the dissolved constituents within each cell are uniform. This approach confirms the mixing cell model as suggested by Campana and Simpson (1984). Hence neither head nor tracer gradients are allowed within the compartment except at the cells' boundaries (the so-called discretized step function).
- All tracers are assumed to be reasonably conservative within the flow domain and along the flow path. Rapid dissolution or precipitation of minerals is assumed to be negligible.

For the solution, the aquifer is divided into N discrete homogeneous compartments. This is basically a discretization of the flow domain based upon hydrogeologic considerations together with multi-tracer cluster analyses. Assuming that I_n potential

inflows and J_n outflows are identified across the active boundaries of cell **n,** a water balance expression for cell **n** can be written as:

$$\sum_{i=1}^{I_n} q_{in} - p_{m_n} - \sum_{j=1}^{J_n} q_{nj} = S_n^* \frac{dh_n}{dt} \tag{1}$$

where q_{in} and q_{nj} denote fluxes during dt from the *i-th* source into cell **n** and from cell n into cell j, respectively; p_{m_n} and S_n designate rate of pumping and storage capacity in cell n, h_n denotes the average hydraulic head which is associated with that compartment for the time interval dt. For a steady flow system, or even for an aquifer with periodic seasonal fluctuations (quasi-steady flow), one may identify a time period $\tau = t_2 - t_1$ for which $h_{t_1}=h_{t_2}$. Thus, S_n is not a function of time ($S_n \neq S_n(t)$), so by integrating equation (1) over time period τ and dividing by τ, one obtains:

$$\sum_{i=1}^{I_n} Q_{in} - P_{m_n} - \sum_{j=1}^{J_n} Q_{nj} = \varepsilon_n \tag{2}$$

where

$$Q_{in} = \frac{1}{\tau}\int_{t_1}^{t_2} q_{in}dt, \quad Q_{nj} = \frac{1}{\tau}\int_{t_1}^{t_2} q_{nj}dt \tag{3}$$

and

$$\frac{1}{\tau}\int_{t_1}^{t_2} S_n \frac{dh}{dt}dt = 0; \quad h_n\big|_{t_1} = h_n\big|_{t_2} \tag{4}$$

Q_{in}, Q_{nj} and Pm_n denote time averaged values of the source, discharge and pumping fluxes in cell n, respectively; ε_n is the deviation from water (flux) balance due to various field errors of the identified fluxes entering or leaving cell n.

It is assumed that each cell **n** within the flow domain and every potential source i of water can be assigned a unique representative concentration, CM_{nk} and C_{ink} respectively, of a dissolved species (tracer) k. In view of equations (2), (3) and (4), the mass balance expression for every tracer k ($k = 1, 2, \ldots K$) for the time period t is

$$\sum_{i=1}^{I_n} C_{ink} Q_{in} - CM_{nk}\left(P_{m_n} + \sum_{j=1}^{J_n} Q_{nj} \right) = \varepsilon_{nk} \tag{5}$$

where ε_{nk} is the deviation from mass balance associated with tracer k. ε_{nk} expresses sampling and measuring errors associated with the chemical and isotopic analyses of species k in every flow component.

Combining equations (2) and (5) into a set of $K+1$ mass and water balance equations for cell n and upon rearrangement of these expressions into separate known and unknown terms one obtains:

$$\underline{\underline{C}}_n \underline{Q}_n + \underline{D}_n = \underline{E}_n \tag{6}$$

where $\underline{\underline{C}}_n$ is a matrix $[(k+1) * (I_n + J_n)]$ of known concentrations; $\underline{D}_n$ is a vector $[(k+1)*1]$ of known flux terms such as rate of pumping or point injection source; $\underline{E}_n$ is a $[(k+1)*1]$ error vector associated with cell n; and $\underline{Q}_n$ is a $[(I_n+J_n)*1]$ vector of unknown fluxes entering and leaving cell n. A detailed description of the matrix form and the aforementioned vectors is given in Adar and Sorek (1989).

All the flux components in the entire aquifer flow system can now be evaluated by minimizing of the sum of the square errors similar to a procedure suggested by Woolhiser et al. (1982).

By virtue of equation (6) and by assembling all the square error expressions over all the N cells, one obtains:

$$\mathbf{J} = \sum_{n=1}^{N} \underline{E}_n^T \underline{\underline{W}} \underline{E}_n = \sum_{n=1}^{N} \left(\underline{\underline{C}}_n \underline{Q}_n + \underline{D}_n \right)^T \underline{\underline{W}} \underline{E}_n \left(\underline{\underline{C}}_n \underline{Q}_n + \underline{D}_n \right) \tag{7}$$

$\underline{\underline{W}}$ is a diagonal matrix composed of weighing values for each dissolved constituent. It denotes estimated errors expected for each of the measured terms in the mass balance equations. A comprehensive mathematical description and testing of the computer code with synthetic data, including sensitivity analysis, is provided in Adar et al. (1988).

This model, using environmental tracers, was applied by Rosenthal et al. (1990) and Adar et al. (1992) to identify the hydrogeological pattern and to provide the quantitative

assessment of the subsurface flow system of the Arava arid basin of southern Israel. As this region has an extremely complicated geology, numerical modeling based upon the flow equation could not be implemented due to the lack of hydrological parameters and the existence of multiple water bearing layers, hence, complex boundary conditions. In the first step, hydrochemical and isotopic data were statistically processed by multi-variable cluster analyses to identify water bodies and potential sources of recharge. Later, utilizing the Wolf Algorithm (1967), the same data was processed by quadratic programming, to provide a reliable and unique solution for unknown recharge components (although other optimization techniques should be applicable as well). Six mixing cells were identified based upon thirteen constituents. A quantitative assessment of eleven significant subsurface inflows was obtained.

Experience has shown (Adar et al. 1988, and Adar, 1995) that this model is extremely sensitive to the setup of the internal flow pattern, and, to a lesser degree, to proper assignment of sources of potential recharge. In the first stage the model was applied to each level with cell configuration as suggested by the integrated cluster analyses. Later an attempt was made to run the model simultaneously for several layers.

Results obtained with the mixing cell model

Based on the hydrogeological evaluation of well logs and geological cross-sections, the groundwater basin of the Almaty was divided into 5 sub-aquifers (levels 1 to 5). Following the hydrochemical analyses, each layer (sub-aquifer) was divided into cells (compartments), using the results of the hydrochemical cluster analyses. This model allowed the identification of water and solute fluxes between cells, sub-aquifers, and sources of pollution. This section elaborates on results obtained from each sub-aquifer. Relevant complete computer outputs on which the assessment was based are given in the Appendix II.

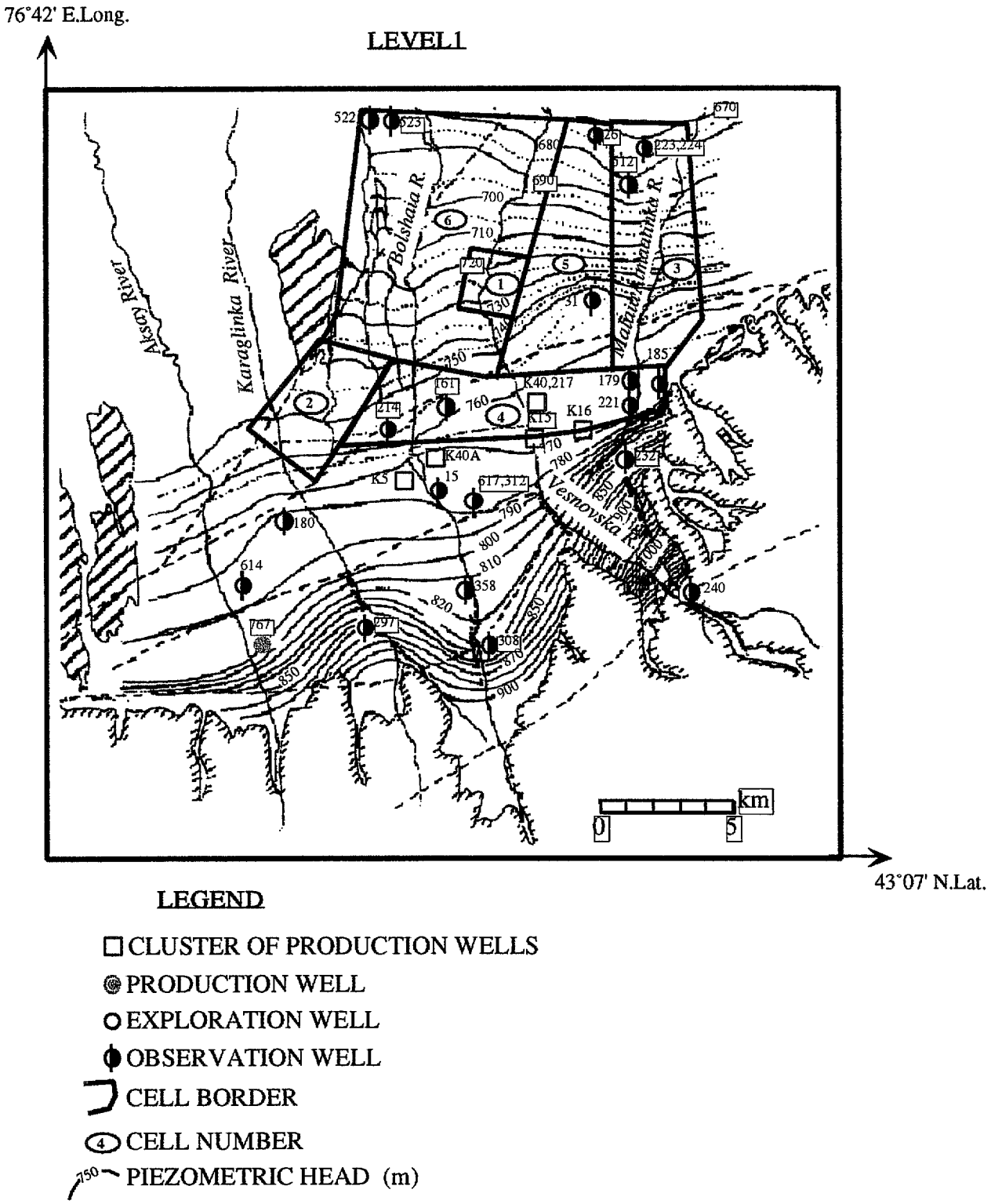

LEGEND

- □ CLUSTER OF PRODUCTION WELLS
- ● PRODUCTION WELL
- ○ EXPLORATION WELL
- ◐ OBSERVATION WELL
- CELL BORDER
- (4) CELL NUMBER
- 750 PIEZOMETRIC HEAD (m)

Fig. 18 - Piezometric heads and the cells boundaries in level 1.

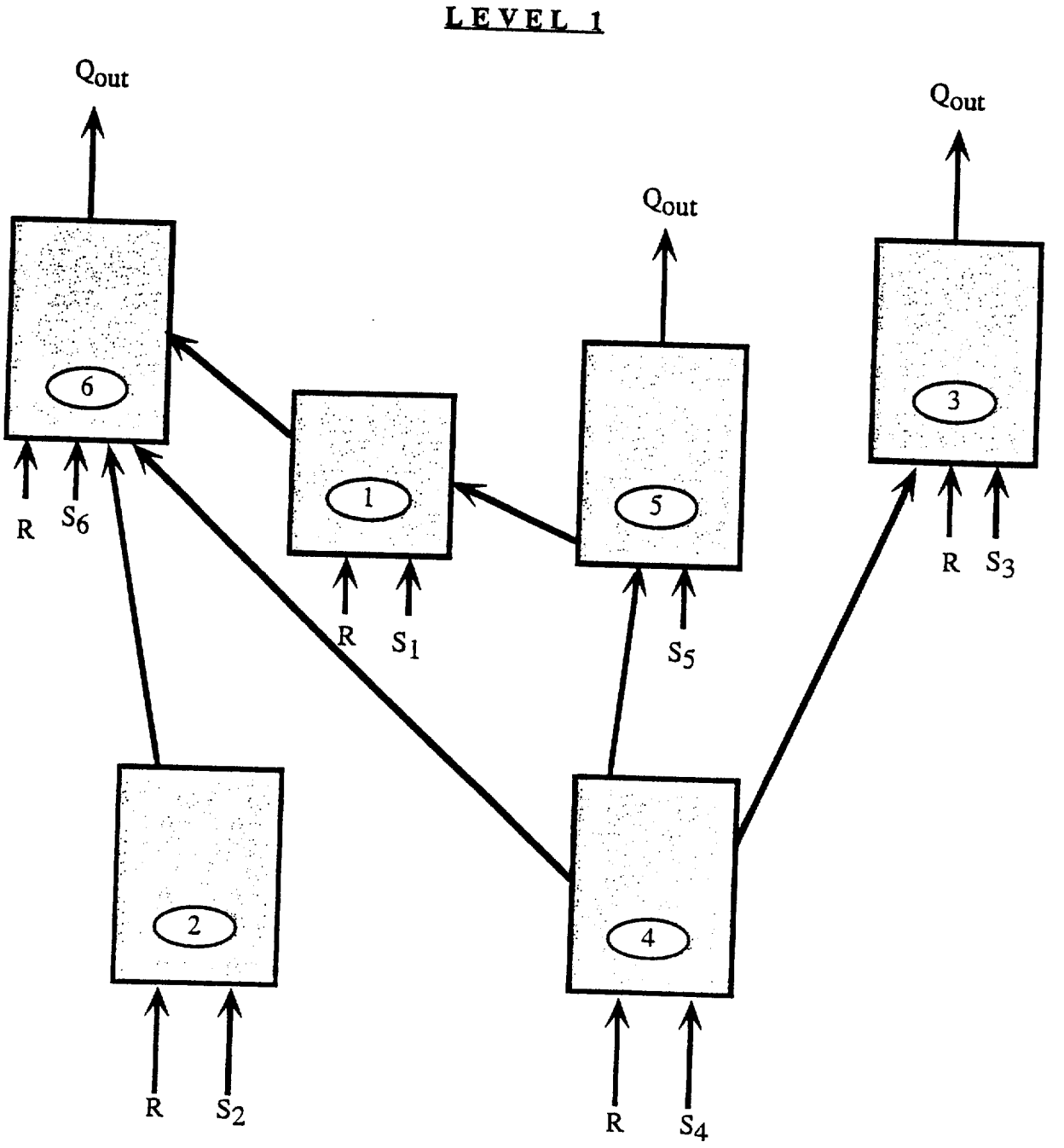

Figure 19. A schematic flow pattern for aquifer (level) 1: scenario I

(1) - cell number
R - potential streambed infiltration
S_i - potential source of pollution
Q_{out} - flow out

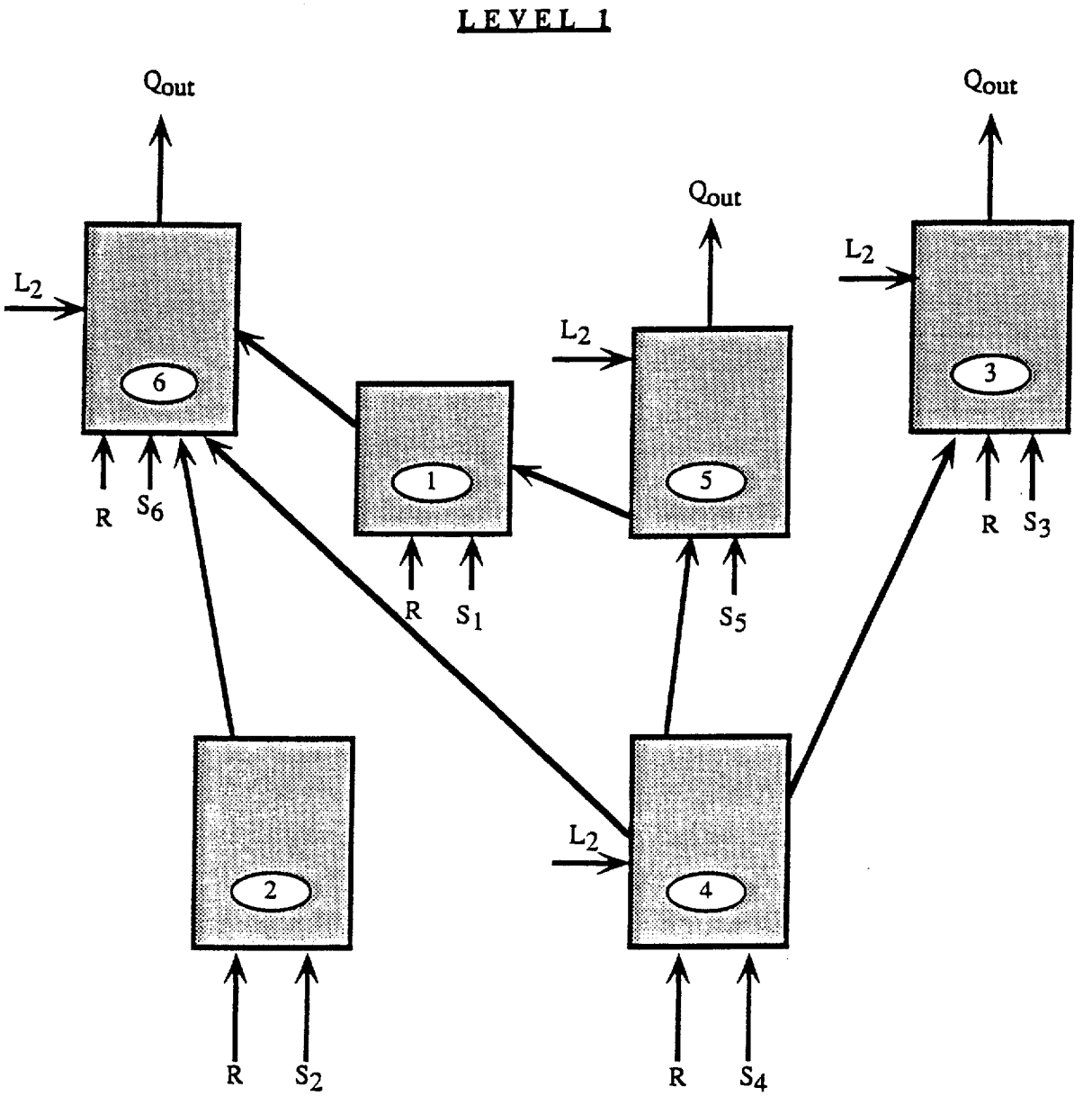

Figure 20. A schematic flow pattern for aquifer (level) 1: scenario II

(1) - cell number
R - potential streambed infiltration
S_i - potential source of pollution
L_2 - potential inflow from level 2
Q_{out} - flow out

Aquifer 1 (level 1).

Six cells were assigned for level 1. The schematic cell boundaries and the location of the associated observation and production wells are illustrated in Fig. 18. Level 1 represents the top phreatic aquifer which currently, due to various levels of contamination, is not subject to massive water extraction. Therefore, pumping from all cells is practically zero. However significant outflow downstream is expected. A schematic flow pattern for scenario I of the level 1 is given in Fig. 19, including all potential inflow (recharge) and internal flow configuration. Outflows from cells 3, 5, and 6 was estimated on the basis of Darcy's approach utilizing known transmissivities and piezometric heads as indicated in Fig. 18. The outfluxes estimated for boundary cells 3, 5 and 6 were 4830, 400, and 1070 m3/day, respectively. These data and the average macro element concentrations in each cell were used as input in the inverse model to detect for fluxes and sources. At this iteration (scenario I), we analyzed the flow system in Level 1 as a separate and isolated water bearing layer. Results showed a significant water balance deficiency between 50% and 75%. No matter what adjustment and flow modification we imposed on the flow pattern, the deficiency remained far greater than could be accounted for by any sufficient water balance adjustment. Therefore, an additional source was assigned as upward leakage from level 2 into four compartments (3, 4, 5, and 6) in the lower basin section (scenario II). The modified schematic flow pattern that included upward leakage from Level 2 (L2) is shown in Fig. 20.

Inflow (sources of recharge in m^3/day) was calculated for all the external cells. Cell 1: recharge from rivers - 300, polluted inflow (source #1) - 75; Cell 2: mountain front recharge and rivers - 80, pollution (source #2) - 25; cell 3: mountain flows and rivers - 1340, upward inflow from level 2 - 2970; cell 4: pollution (source #4) - 40; inflows from level 2 - 450; cell 5: inflow from level 2 - 370, pollution (sources #5 and 6) - 50; cell 6: Inflow from level 2 - 920. The calculated fluxes (in m^3/day) between cells are: from 1 into 6 - 325; from 2 into 6 - 65; from 4 into 3 - 480; from 4 into 6 - 75; and from 5 into 1 - 10.

The most unexpected finding was that cell 4, though located close to the foothills, does not receive direct contribution from floods. This strange observation might not be verified. However, if polluted source # 4 is mainly recharged from floods, it would carry most of the mass flow of flood water as a combined input into cell 4. (Such observation was studied with synthetic data in Adar et al. 1988). A similar argument might be hold for Cell 6, but this unusual situation might also reflect the fact that direct deep percolation from floods in the lower basin has been neglected. Another peculiarity is the zero flux from cell 4 to 5.

This might be simply attributed to negligible stream lines leading from Cell 4 to Cell 5. Alternatively, it may be due to the limited outflow assigned to Cell 5. Another possibility is that cell 5 does not have such large spatial extension, and its upper part belongs to cell 6 or even to cell 1. In scenario III, level 2 was introduced also to cell 2. In this case, source 2 was totally eliminated (25 in scenario II) and L2 reached almost 5 m^3/day. The fluxes in the rest of the components were left almost the same as in scenario II.

Aquifer 2 (level 2).

Insufficient observation holes and lack of information on the chemical distribution within Level 2 (L2) eliminated the possibility of discretizing this sub-aquifer into cells. However, the average macro-elemental concentration of this sub-aquifer was used to elaborate on the possibility that either due to piezometric gradient or to heavy pumping, level 2 leaks into aquifers 1 and /or 3. As already demonstrated in Level 1, L2 terms were introduced also into aquifers 3 and 4. This potential contribution was based on the map of piezometric heads (Fig. 21) which showed higher heads than in levels 1,3 & 4. Naturally such a pattern of hydraulic head could not be maintained unless affected by high rates of pumping.

Aquifer **3** (level 3).

Seven cells were assigned to sub-aquifer 3. The schematic cell configuration is illustrated in Fig. 22. Outfluxes from cells 2, 5 and 6 were evaluated on the basis of Darcy's approach utilizing known transmissivities and piezometric gradients (also shown in Fig. 22). The estimated outflow for boundary cells 2, 5, and 6 was 36000, 30000 and 20000 m^3/day, respectively. The assigned values of pumping rates (obtained from the established common data base) from cells 2 to 7 were 45000, 29300, 57800, 31900, 50600 and 42300 m3/day, respectively.

In the first iteration, we analyzed the flow system in Level 3 as an isolated sub-aquifer. This was the initial measure for an examination of the feasibility of a separate water bearing unit. Results for various flow configurations showed a significant water balance deviation of between 40% to 50% . No matter what adjustment and flow modification we imposed on the flow pattern, the error remained high beyond sufficient water balance adjustment. In fact, Level 3 represents a semi-confined aquifer which is currently under massive water extraction. Hence it is possible that leakage of contaminated water reaches

this aquifer from above because of a decrease of piezometric head. Therefore, an additional source (L2) was assigned as a downward leakage from level 2 into the most heavily pumped compartments 3 to 7 (scenario I). This flow system is illustrated in the schematic flow pattern shown in Fig. 23. With the option of downward leakage from level 2, the total water balance error was decreased to 6.8%, which support the hypothesis of enhanced leakage into this aquifer. This last modification of the flow system was performed after the simulation for level 4 had completed. As we shall see below, a reasonable result showing a small deficiency of water balance for aquifer 4 could be obtained only in the case of flux contribution from level 3. The calculated outflow from level 3 was then included in the modified compartmental setup as illustrated in Fig. 24. In scenario II (Fig. 24), substantial outflow from Level 3 into Level 4 were noticed: 810, 20100, and 14390 m^3/day for cells 3, 5, and 7, respectively. This scenario reduced the water balance error to only 4.1%.

The following inflows in m^3/day were obtained: cell 1- streambed infiltration (rivers)- 7930; cell 2- no external inflow was assigned as the piezometric head in this section in both Levels 3 and 2 are almost the same; cell 3- streambed infiltration - 39700, leakage from level 2 - 1180; cell 4- streambed infiltration - 52970, downward leakage from level 2 - 11550; cell 5- streambed infiltration - 93560, leakage from level 2 - 6930; cell 6- level 2 - 62570; cell 7- streambed infiltration - 19610, level 2 - 49450. The calculated fluxes (in m^3/day) between cells are: from 1 to 6 - 6210; from 3 into 4 - 0; from 3 into 6 - 13750; from 4 into 5 - 0; from 4 into 6 - 11620; from 6 into 2 - 56240; from 7 into 4 - 0; from 7 into 5 - 10110.

LEVEL 2

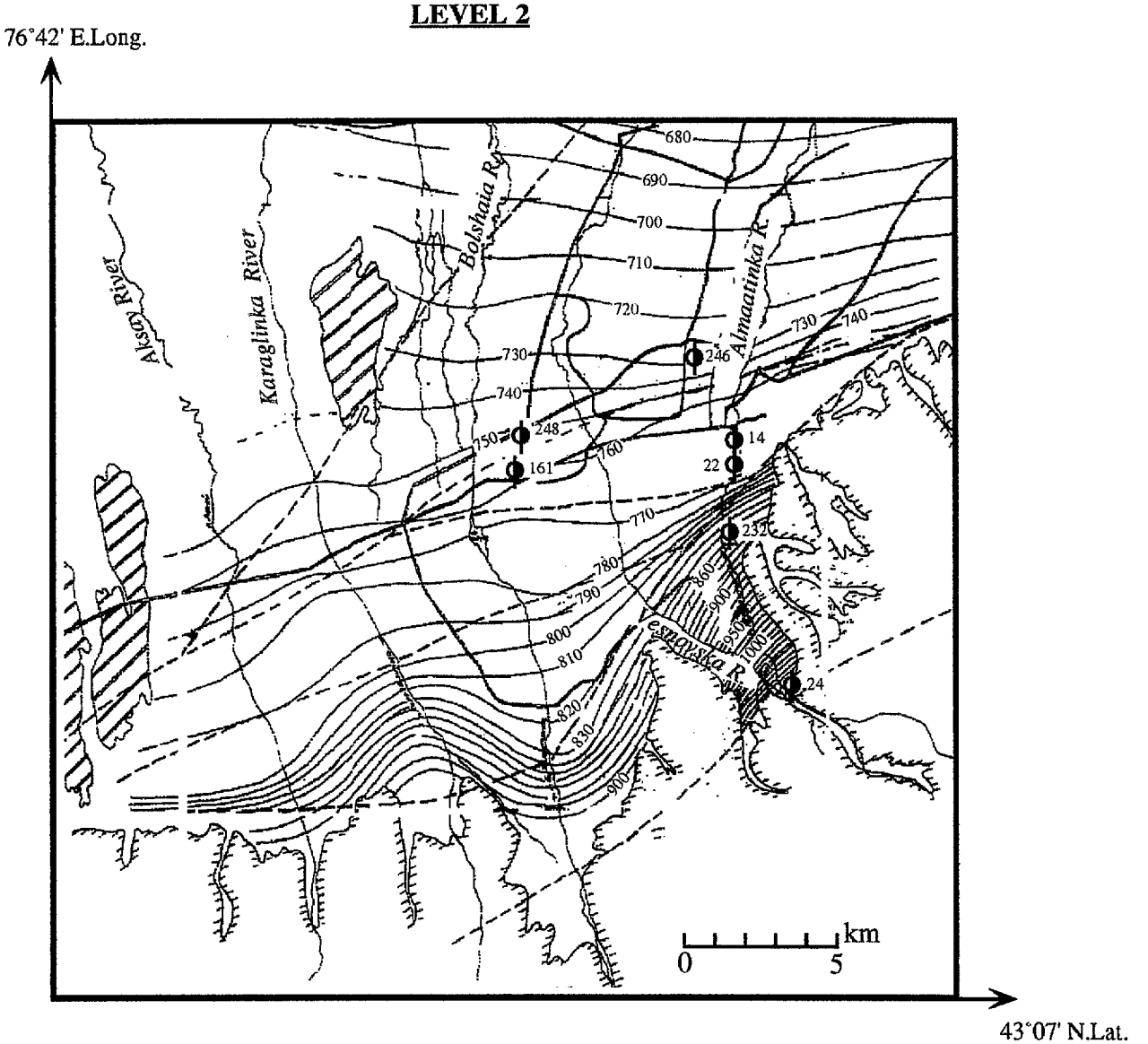

LEGEND

OBSERVATION WELL

750 PIEZOMETRIC HEAD (m)

Fig. 21 - Piezometric heads in level 2.

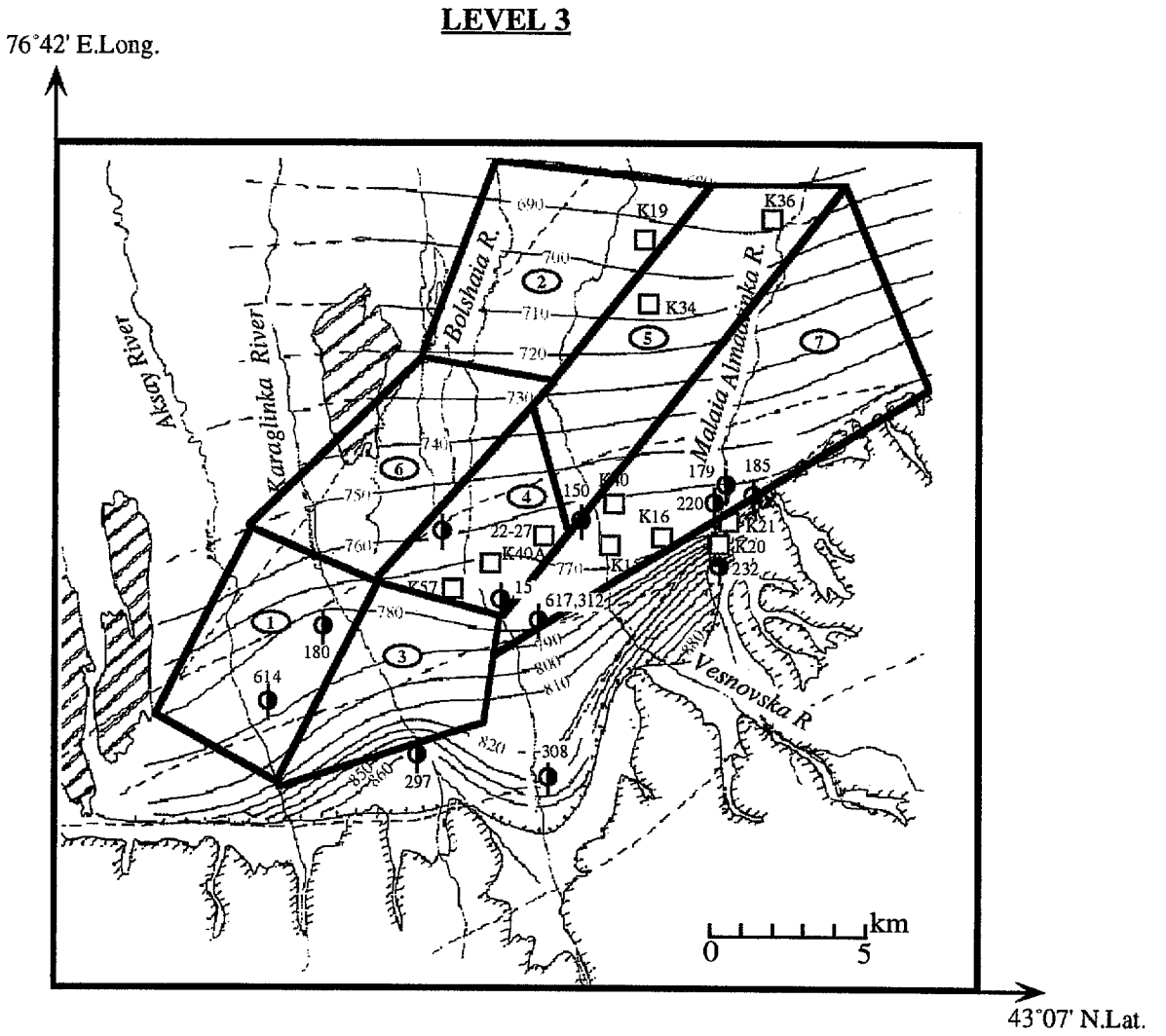

LEGEND

- □ CLUSTER OF PRODUCTION WELLS
- ● PRODUCTION WELL
- ○ EXPLORATION WELL
- ϕ OBSERVATION WELL
- CELL BORDER
- ④ CELL NUMBER
- 750 PIEZOMETRIC HEAD (m)

Fig. 22 - Piezometric heads and the cells boundaries for level 3.

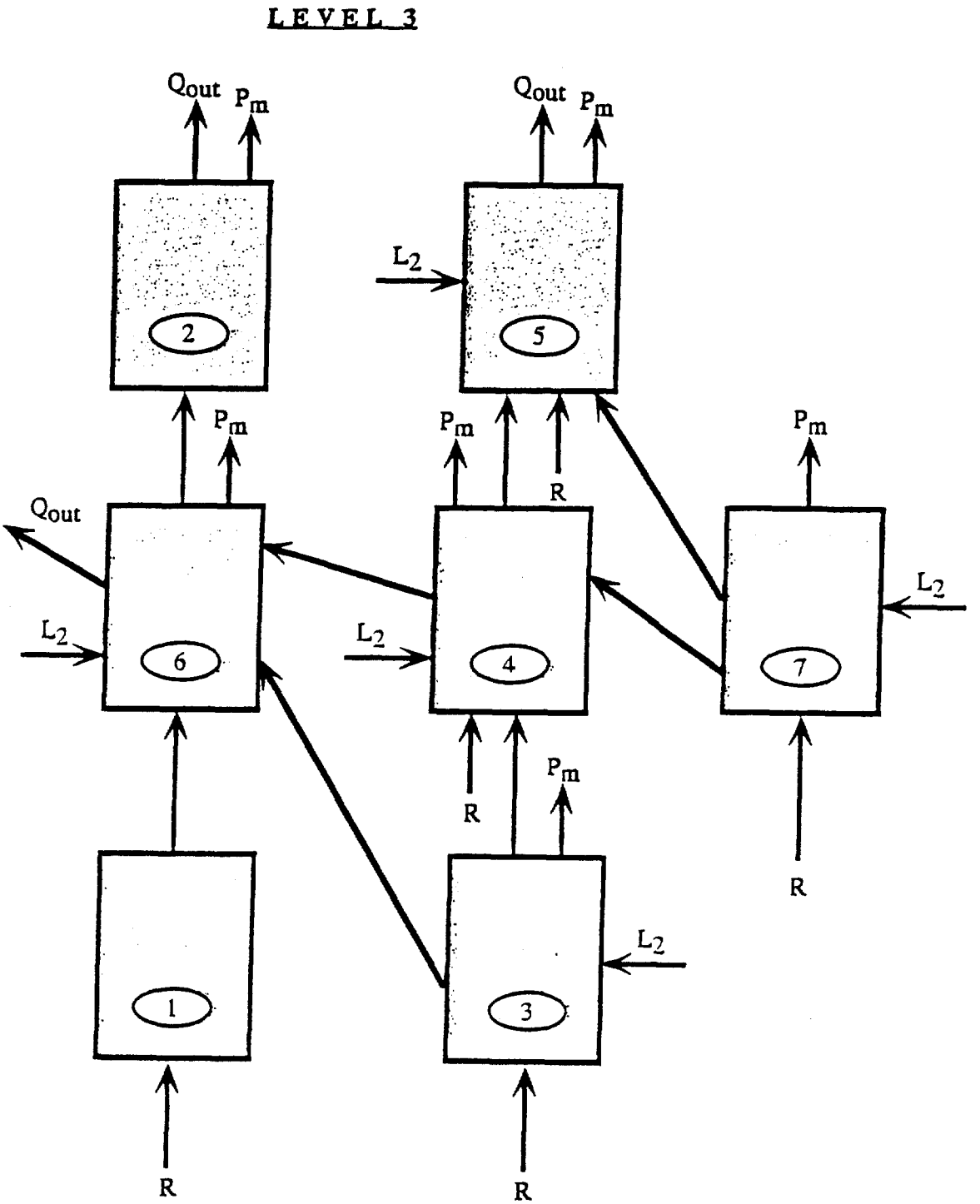

Figure 23. A schematic flow pattern for aquifer (level) 3: scenario I

(1) - cell number
R - potential streambed infiltration
L_2 - potential inflow from level 2
Q_{out} - flow out
P_m - pumpage

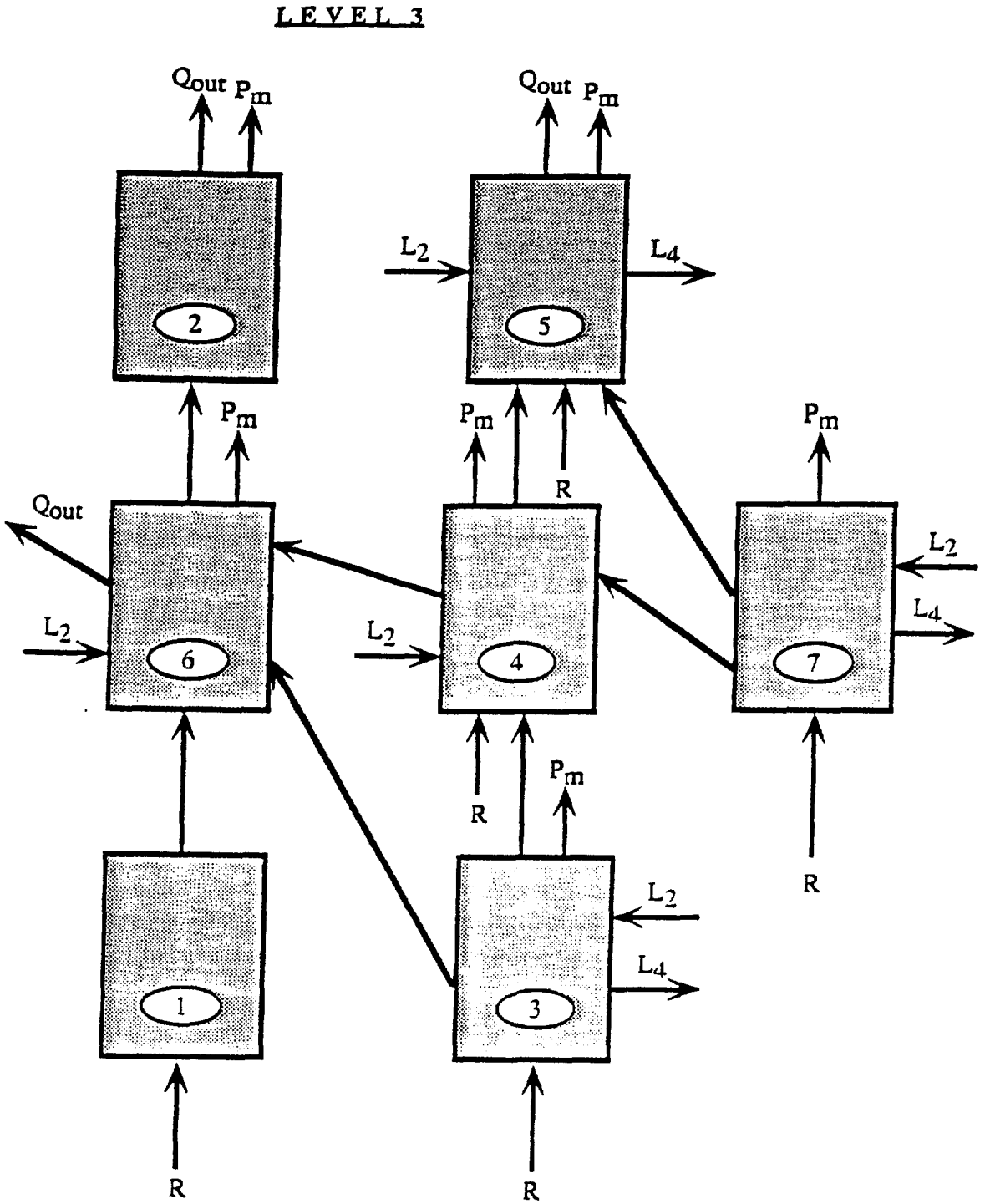

Figure 24. A schematic flow pattern for aquifer (level) 3: scenario II

(1) - cell number
R - potential streambed infiltration
L_2 - potential inflow from level 2
L_4 - outflow from level 3 into level 4
Q_{out} - flow out
P_m - pumpage

Aquifer 4 (level 4).

The hydrochemical analysis permitted a division of this sub-aquifer into six cells as shown in Figure 25. The outflux estimated for boundary cells 1, 2, and 6 were 11400, 14040 and 14300 m^3/day, respectively. The assigned pumping values (on the basis of the established common data base) from cells 1 to 6 were 17670, 7040, 17900, 500, 6650, and 22000 m^3/day, respectively.

The schematic flow pattern of level 4 as a first iteration of an isolated sub-water bearing layer is given in Fig. 26, including all potential inflows (recharge) and internal flow configurations. Results showed a significant error water balance of up to 75%. Following the idea of potential deep percolation from runoff at the top the alluvial fans we introduced the streambed infiltration as a potential source (R). No matter what flow modifications we imposed on the flow pattern, however, the disbalance remained higher than sufficient water adjustment. Therefore, instead of streambed infiltration, an upward leakage from level 5 was assigned all aquifer compartments. This modification is indicated with L5 (for Level 5) in the schematic flow pattern for scenario II as shown in Fig. 27. Although the water error balance decreased by 40%-50%, it still remained unacceptably high. As Level 4 represents a semi-confined sub-aquifer which is currently subject to massive water extraction, one should also consider a possible leakage of water from above. Water in cells 1 to 5 have much higher concentrations of macro components than that does cell 6. Hence, a diluting source had to be introduced into the system. Downward leakage from Level 3 turned to be the only feasible source. The downward water flux from level 3 to level 4 seemed to be possible due to heavy pumpage in level 4 and a decrease of piezometric head. This modification is indicated with L3 (for Level 3) in the modified schematic flow pattern shown in Fig. 28 (scenario III). Cell 5 in level 4, with a very low water concentration, is situated along the foothills; it is currently not under heavy pumping. Therefore, the leakage from level 3 to level 4 in this region is unlikely. Including source terms from level 3, the compartmental setup of level 4 allowed for a decrease of water mass balance error of 8%. These results with the later flow configuration were the best optimized solution we could obtain.

Calculated inflows in m^3/day follow: cell 1- level 5 - 9850, level 3 - 20100; cell 2- level 5 - 20480, level 3 - 11670; cell 3- level 5 - 15790, level 3 - 2720; cell 4- level 5 - 2550, level 3 - 810; cell 5- level 5 - 11340; cell 6- level 5 - 17350, level 3 - 4740. The calculated flows between cells were (m^3/day): from 1 to 6 - 0; from 2 into 1 - 0; from 2 into 3 - 15060;

from 4 into 1 - 0; from 4 into 6 - 0; from 5 into 6 - 6110. Computed interflows between cells 1 and 6, 1 and 2, 4 and 6 were equal to zero probably due to gradients of piezometric head between these cells being close to zero (Fig. 25). Alternatively, it could be an outcome of too high pumping values having been assigned to those cells.

Aquifer 5 (level 5).

Insufficient information on the chemical distribution in Level 5 eliminated the possibility of discretizing this level into cells. However, average macro-element concentrations of this sub-aquifer were used as a possible source of leakage into cells in aquifer 4. This potential contribution was assigned based on maps of piezometric heads for Levels 4 & 5 (Figs. 25 & 29, respectively) which showed the potential of upward leakage from the deep water bearing unit (Level 5) into Level 4.

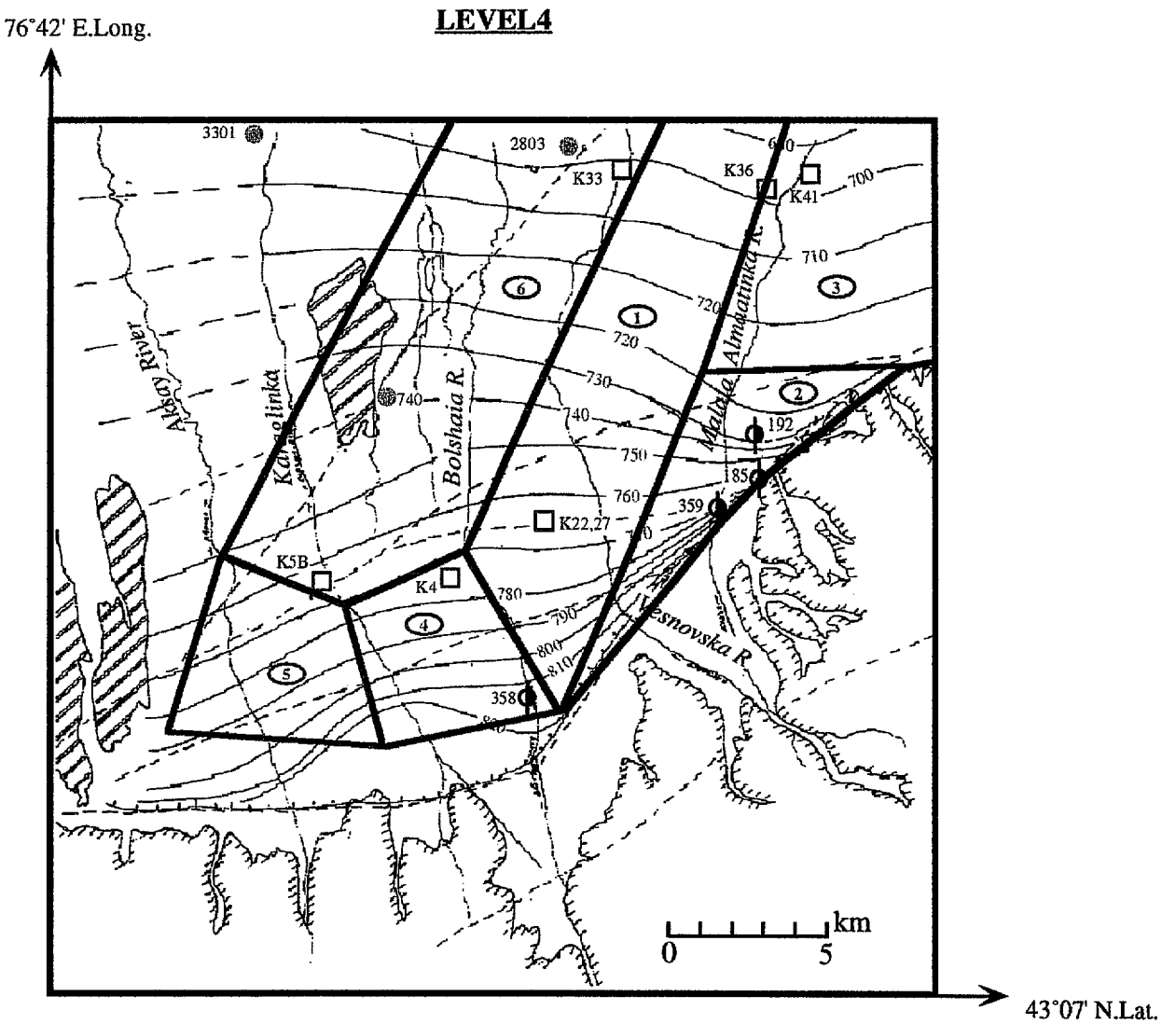

LEGEND

- □ CLUSTER OF PRODUCTION WELLS
- ● PRODUCTION WELL
- o EXPLORATION WELL
- ϕ OBSERVATION WELL
- (5) CELL NUMBETR
- ⟩ CELL BORDER
- 750 PIEZOMETRIC HEAD (m)

Fig. 25 - Piezometric heads and the cells boundaries in level 4 .

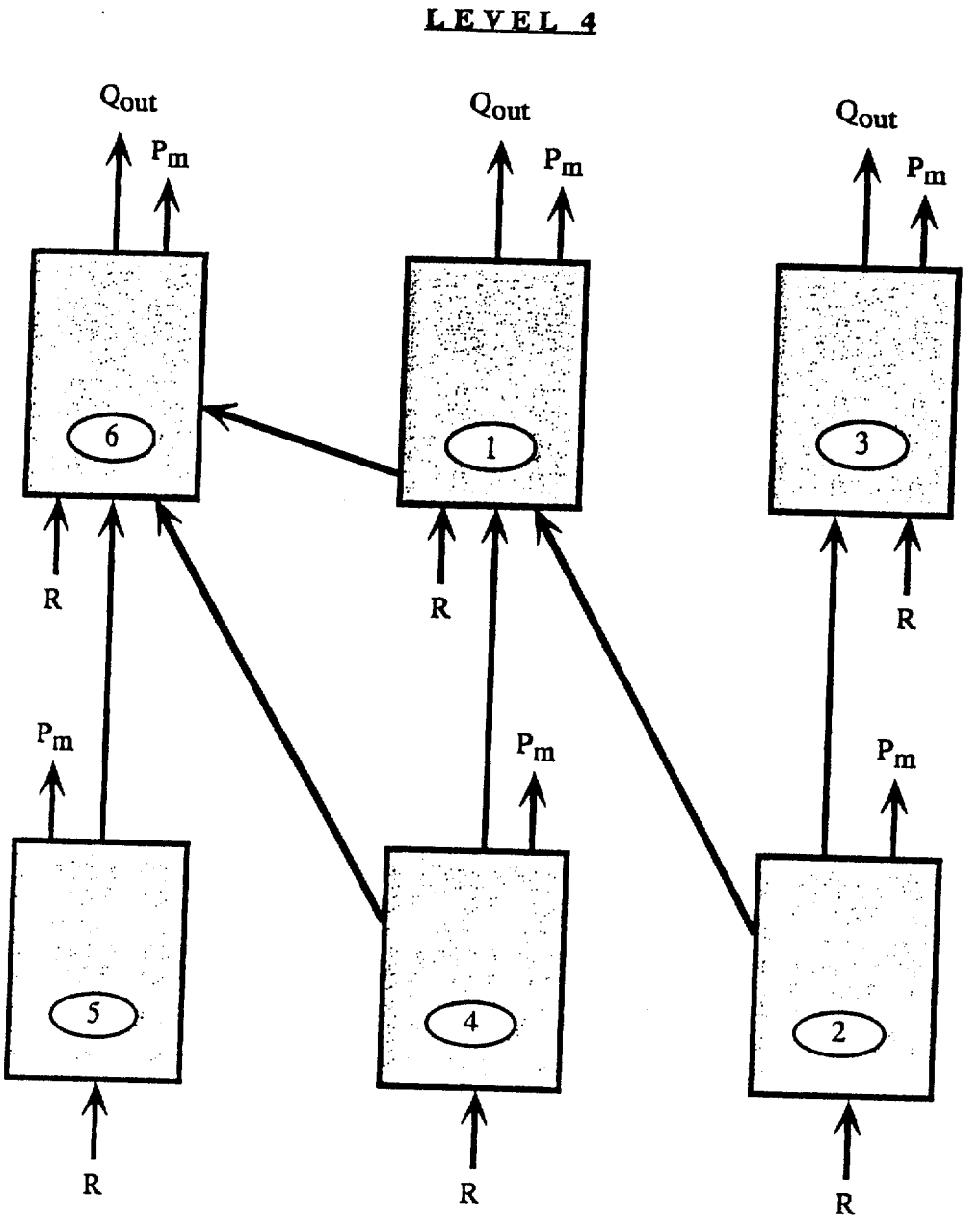

Figure 26. A schematic flow pattern for aquifer (level) 4: scenario I

(1) - cell number
R - potential streambed infiltration
Q_{out} - flow out
P_m - pumpage

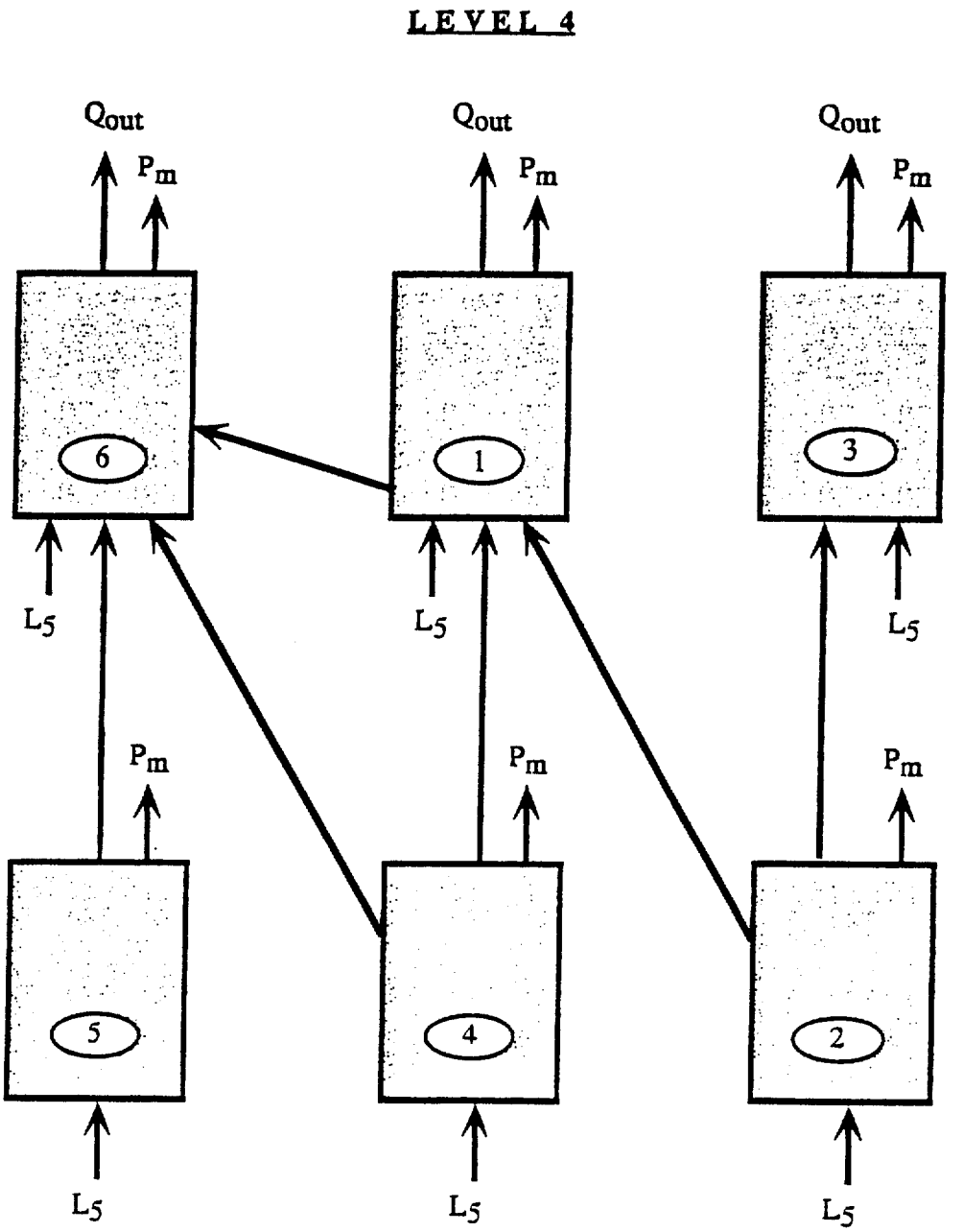

Figure 27. A schematic flow pattern for aquifer (level) 4: scenario II

(1) - cell number
L_3 - potential source of inflow from level 3
Q_{out} - flow out
P_m - pumpage

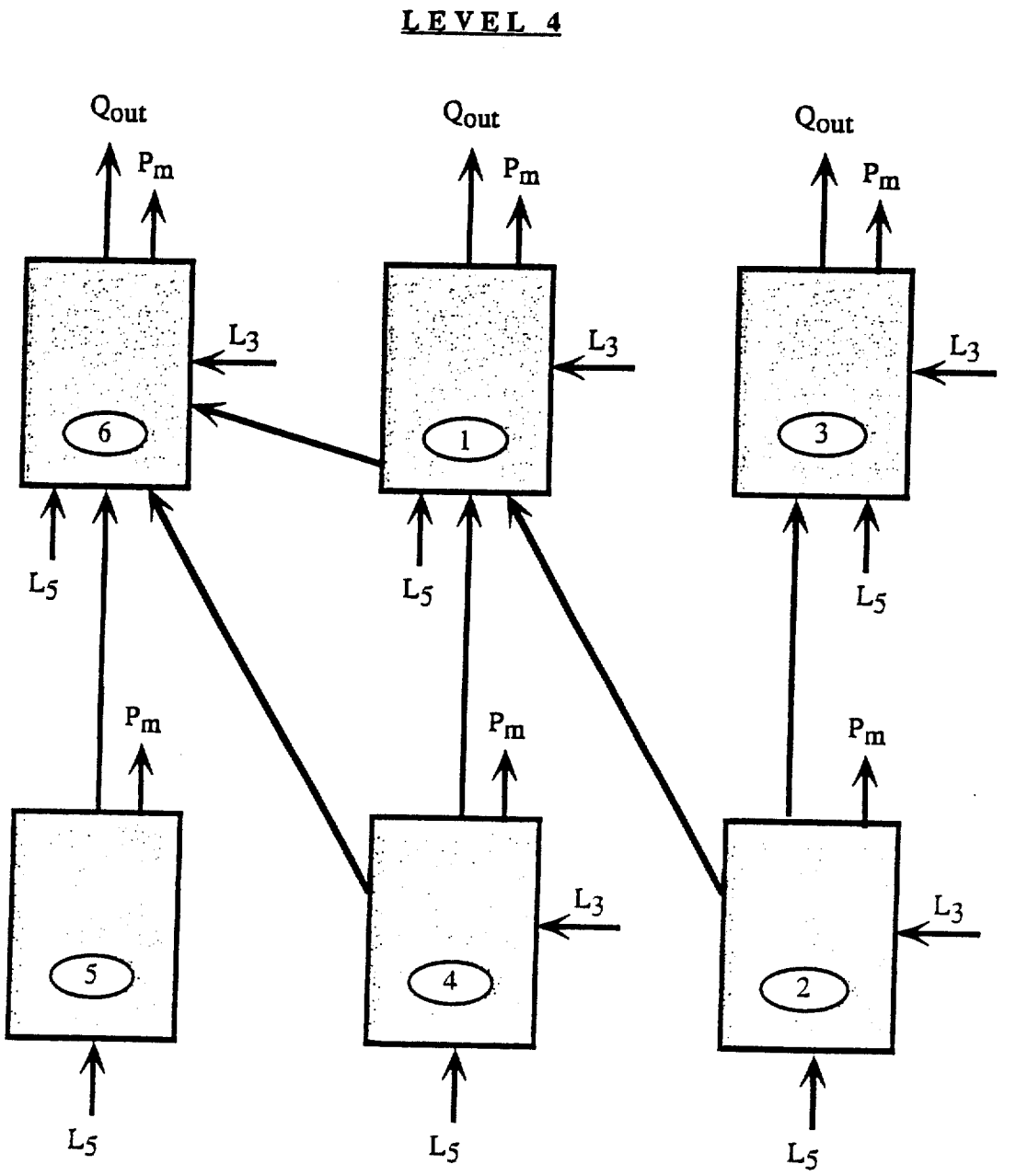

Figure 28. A schematic flow pattern for aquifer (level) 4: scenario III

(1) - cell number
L_3 - potential source of inflow from level 3
L_5 - potential source of inflow from level 5
Q_{out} - flow out
P_m - pumpage

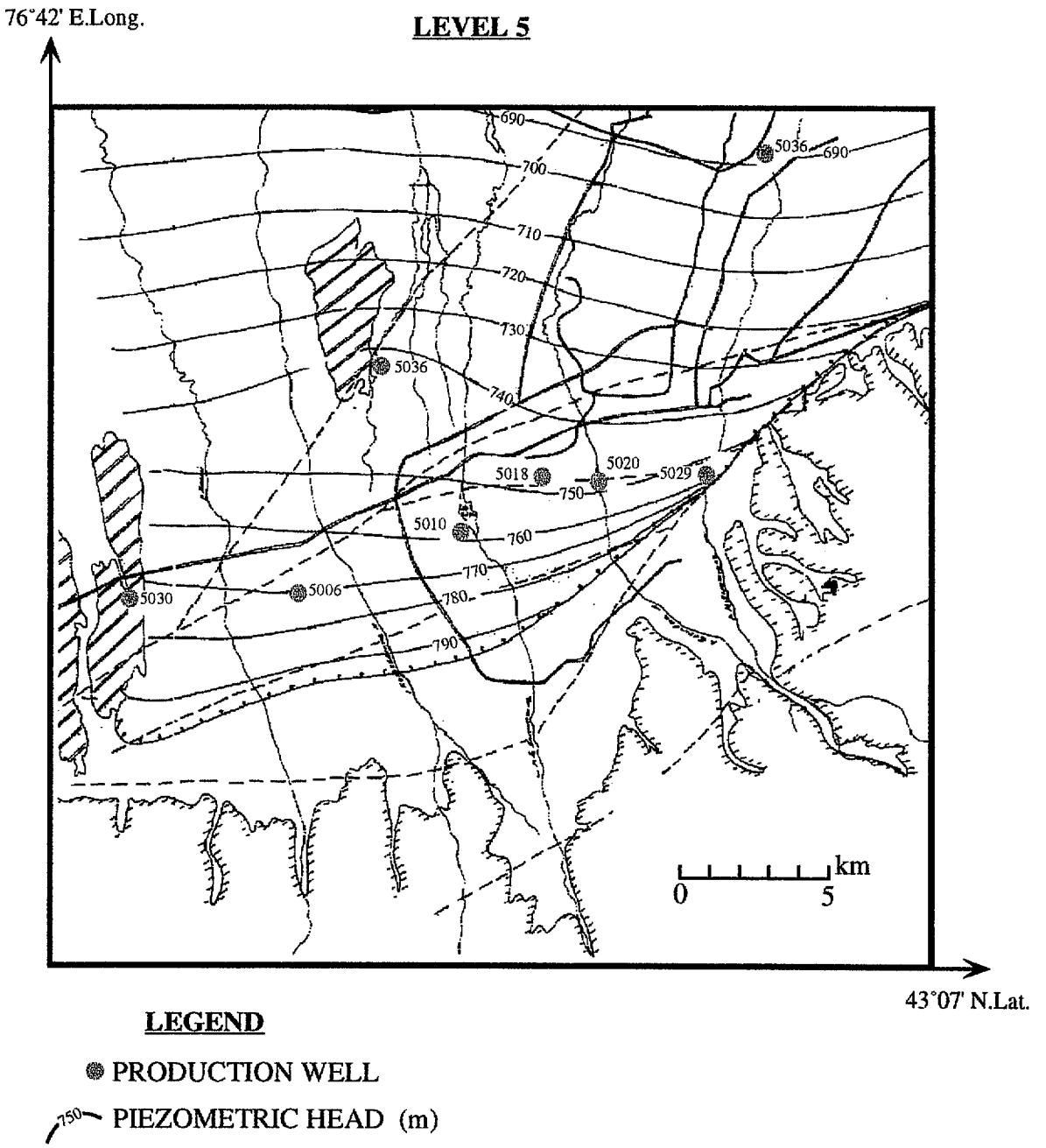

Fig. 29 - Piezometric head in level 5.

Flow pattern in the Almaty Basin

The general scheme of flow patterns for the whole Almaty Basin is presented in Figure. 30. An attempt to assess simultaneously fluxes for the five inter-connected subaquifers considering them as one groundwater flow system (altogether 21 cells), failed. That was probably due to lack of sufficient hydro-geochemical information for aquifers 2 and 5. Actually, these sub-aquifers can not be considered as uniform and homogeneous zones, each represented by one cell. In order to obtain faster convergence and the necessary conservation of mass, the increase of cell numbers imposed a need for more precise for simulations. However, at the present time, such data could not be obtained. The combined schematic flow pattern and the fluxes (m^3/day) associated with each compartment in the water bearing units are shown in Figure 30 whereon one may distinguish between flow components of streambed infiltration (recharge), mountain front recharge, intermediate cells fluxes, sources of pollution, and interflow between sub-aquifer units.

Estimation of transmissivity between cells

Transmissivity values for the Almaty Basin are available from many pumping tests performed about 35 years ago, before heavy groundwater exploitation had begun. At that time the heads, therefore, the thickness of the saturated phreatic aquifer, was about 20 to 30 meters higher than today. As a result of heavy pumping from 1960 to 1975, groundwater levels dropped in some sections to the bottom of the first (phreatic) level, as illustrated in Figure 31. Therefore, the historic transmissivity values for the phreatic level of the aquifer are no longer valid. Instead of performing a new set of pumping tests for the evaluation of the transmissivity distribution, the same mixing cell model was applied to hydraulic heads and to the established cell geometry so as to assess the transmissivity values.

The solved, time-averaged fluxes were used to estimate transmissivity between cells. Following Darcy's law, a flux between any two cells can be written in the following form:

$$Q_{in} = T_{in} l_{in} J_{in} \qquad (8)$$

where T_{in} denotes the transmissivity at the boundary between cells i and n, l_{in} denotes the length of the boundary between these cells, and J_{in} represents the gradient of hydraulic heads across this boundary.

Flow pattern in the Almaty Basin

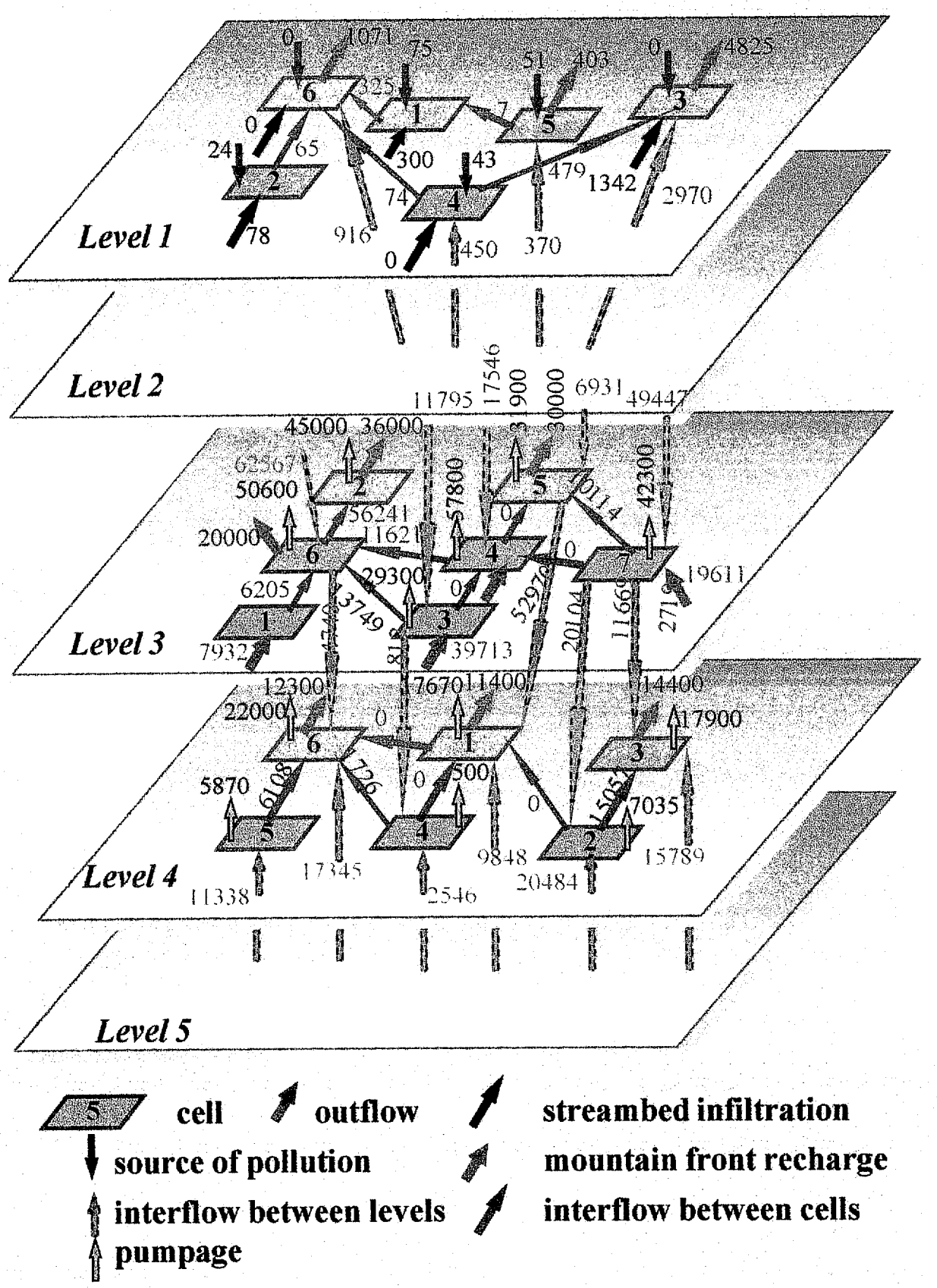

Figure 30. General scheme of flow patterns for the combined aquifer system in Almaty Basin

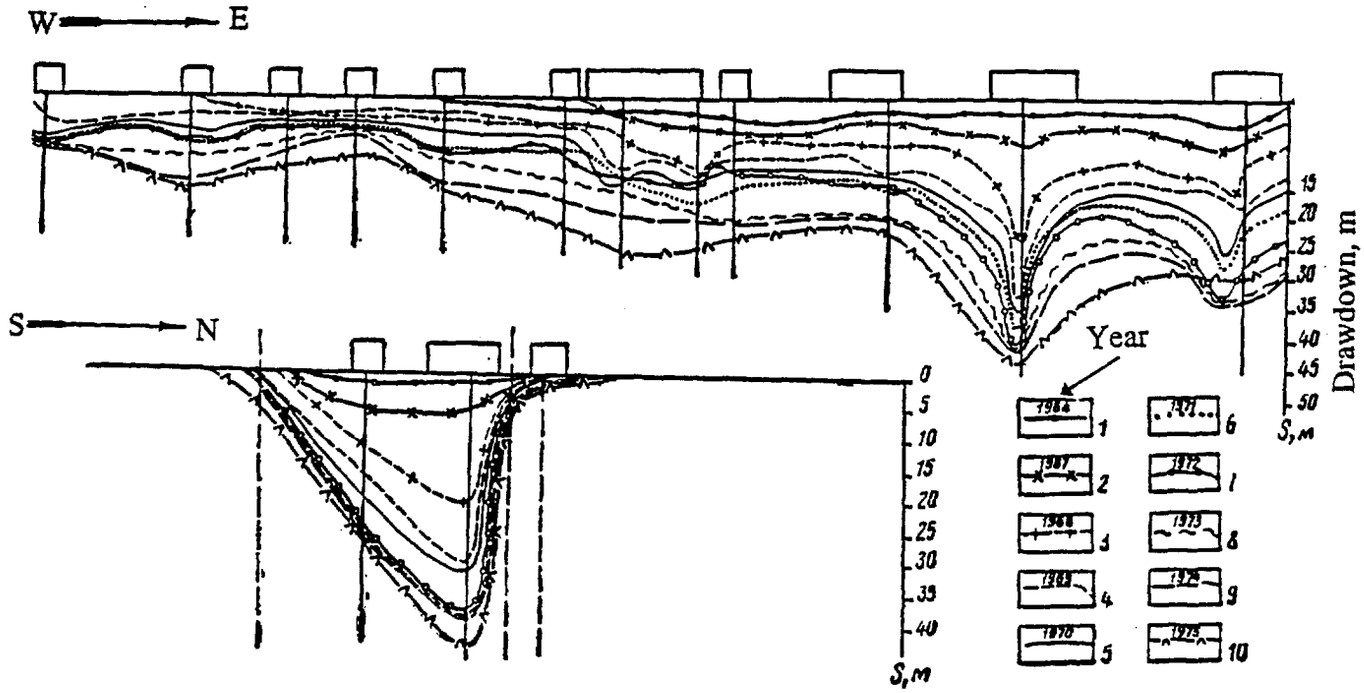

Figure 31. Drawdown of hydraulic head from 1960 to 1975.

To calculate transmissivity from (8), we used measured head gradient values, geometric information associated with cells configurations, and flux values calculated between cells obtained from simulations with the aforementioned compartmental model.

Results

Level 1. The estimated transmissivity (m^2/day) for active flowing boundaries (Fig. 18): $T_{1,6}$= 20, $T_{2,6}$= 4, $T_{4,3}$= 60 and $T_{4,6}$= 3, respectively. The values of transmissivity for this aquifer, obtained as a result of pumping tests performed in the early sixties, vary from 100 to 200 m^2/day in the zones encompassed by Cells 1 & 2; from 50 to 100 m^2/day in the region of Cell 3; from 500 to 1000 m^2/day in Cell 4; from 100 to 500 m^2/day in Cell 5, and from 25 to 100 m^2/day in Cell 6. Such considerable differences between the calculated and observed values are explained by a dramatic drop in water levels and, therefore, a decrease in the saturated thickness. As already mentioned above, during last decades the groundwater levels have declined significantly, at some points by 20-30 m. To calculate transmissivity from (8), we used current available information about head gradients. The calculated fluxes obtained by the multi-cell model for concentrations of solutes were measured in groundwater as sampled during the last few years. Hence, the estimated transmissivity reflects, more or less, the current situation prevalent in the Almaty top aquifer. Indeed, evidence shows that due to limited groundwater storage, low transmissivity and high level of contamination, groundwater exploitation from this level has almost terminated.

Level 3. The estimated transmissivity (m^2/day) for flowing boundaries (fig. 22) in Level 3 follows: T_{16}=250, T_{36}=2400, T_{46}=270, T_{62}=2200, and T_{75}=720. The corresponding values of transmissivity obtained by pumping tests were in the range of 100 to 500 m^2/day between cells 1 and 6, from 1000 to 4000 m^2/day between cells 3 and 6, from 200 to 500 m^2/day between cells 4 and 6, from 500 to 1000 m^2/day between cells 2 and 6, and from 500 to 1000 m^2/day between cells 7 and 5. Fairly close agreement was found for the first three and the last boundaries. Results for the boundary 6/2 over-estimate results from the old time measurements (30 years ago).

Level 4. The calculated transmissivity (m^2/day) across active flowing boundaries (fig. 25) in Level 4 using (8) follows: T_{23}=3760, T_{46}=110, and T_{56}=190. As calculated fluxes for the other boundaries turned to be zero, transmissivity for these boundaries could not be

assessed. The corresponding values obtained from pumping tests are in the range of 1000 to 2000 m^2/day between cells 2 and 3, from 2000 to 3000 m^2/day between cells 4 and 6, and from 2000 to 3000 m^2/day between cells 5 and 6. The transmissivity, estimated by multiple cell model, for last two boundaries based on hydraulic heads observed 30 years ago and recent concentration values, is much smaller than observed 30 years ago. However, due to heavy pumping in clusters of production wells K5b & K4 situated along these boundaries (see Fig. 25), the actual fluxes across the boundaries are smaller than before. This has led to an underestimation of the actual transmissivity. In order to justify our argument, updated heads information should be provided.

Conclusions

Results confirm the previous hypothesis that the study area should be divided into 4 zones parallel to the mountain front: mountainous section, low mountainous section, alluvial fan and the lower valley. These distinguished sections were identified based on different hydrological conditions of groundwater flow as well as by qualitative and quantitative features of the pollution sources.

At the mountain front and the upper alluvial section only one aquifer layer could be identified. However, at least four layers should be considered at the lower alluvial parts. In the latter, the two upper aquifers are not used for groundwater exploitation. The upper aquifer (level 1) is heavily contaminated, and the productivity of the second sub-aquifer (level 2) is very low.

The original hypothesis about potential recharge along ephemeral streams into the top aquifer layer was found to be true. However, streambed infiltration along the stream channels is significant mostly at the higher alluvial sections near the mountain front. No indication was found for the existence of sub-aquifer units in this section. Therefore, deep percolation from streambed infiltration might also recharge the upper sections of deep aquifer units. Down the basin, streambed infiltration cannot recharge the deeper levels since there is no direct hydraulic connection between them and the top surface water.

The most striking results are that neither mountain front recharge nor percolation from rivers could be detected in the upper sub-aquifer sections. The abovementioned components, however, became significantly pronounced in the deeper layers. This finding

may elaborate process wherein arid alluvial fans, most of the runoff from the mountainous basins combined with coarse alluvial sediments, infiltrates at the top alluvial sections. This implies that direct recharge from streambed infiltration into the downstream top layers rarely occurs as only major floods are able to reach the lower basin sections in a relative short time. Most of the floods percolate into the top alluvial sediments and then by gravity further distribute into all the sub-aquifers which are connected to the upper alluvial section.

The results of the numerical simulations and their hydrogeological interpretation allows us to draw the following conclusions:

1) Hydrogeological evaluation of groundwater flow components, aquifers, water bodies, and sources of pollution leads to the conclusion that the hydrogeologiocal situation of the study area is extremely complicated. The alluvial sediments are interbedded with silty layers forming semi-confined, sub-aquifer units. Some sections (cells) seem to be relatively isolated from the already contaminated, upper layers. This information can be useful for future development of fields where new wells have to be protected and isolated from contaminated aquifer sections.

2) There is agreement between schemes of flow patterns, obtained as a result of cluster analysis, and simulation by compartmental model together with existing hydrogeological information.

3) The obtained data concerning quantitative estimation of the interflows between cells are of a considerable scientific and practical interest. It allows us to specify the dynamics and the resources of the groundwater in the study area.

4) The delineation of pollution sources of the groundwater permits the modification of the current groundwater management system as a means of preventing contamination of the ground water environment system.

IMPACT RELEVANCE AND TECHNOLOGY TRANSFER

The results actually confirm that the application of the new methodology of using environmental tracers shortens the time during which the assessment of the potential of the water resources can be made. At the same time, this method facilitates the identification of the polluting sources, thus enabling us to take necessary measures to prevent contamination of further water-bearing units. Preliminary results of numerical simulations and experimental investigation clearly indicated the possibilities of hydraulic connections between productive sub-aquifers and highly contaminated water bodies. The tangible benefit from this to the population in the Almaty basin is the identification and quantification of the hydraulic connections between the sub-aquifers thereby enabling the design of a policy of future water extraction. Moreover, it enables us to focus on the zones most sensitive to future contamination.

Special emphasis was given to restore local hardware facilities like computers and their peripheries. The following equipment were purchased for the Institute of Hydrogeology and Hydrophysics of Kazakstan Academy of Science:

1) IBM PC/486DX2-66 MHz, Monitor SVGA, Keyboard, Mouse
2) Printer EPSON FX-1000
3) IBM PC/586DX2-66 MHz (Pentium), Monitor SVGA, Keyboard, Mouse
4) HP DJ-520 Ink Jet printer
5) Auto Scanner; HP 5JIIp
6) CD ROM
7) Software: WINDOWS, EXCEL 4 & QUATRO
8) Copier Cannon FC-330;
9) Cartridges for Cannon FC-330, for HP 5626A, and for HP LJ IIIP;
10) Ribbons for CPF-136;
11) Mouse 2 button;
12) Diskettes 1.2 Mb - 100, diskettes 1.44 Mb - -200;
13) Printer Switch Box;
14) CD "Encyclopedia";
15) S/W Stylus for Windows;
16) S/W Study English.

All above-mentioned items had been acquired via the Ben-Gurion University purchasing department and delivered directly to Kazakstan. Aside from advanced equipment, the Kazakstan scientists were acquainted with the novel methodology of using environmental tracers in a quantitative manner as a measure for regional hydrological modeling.

PROJECT ACTIVITIES/OUTPUTS

The Israeli team visited Kazakstan for a kick-off meeting in November 1993. After a field trip across the research basin and a review of existing data, the investigators agreed upon 9 months of detailed activities and on the conceptual model to be implemented. As a result, a data base was reestablished and new sampling missions were assigned.

In October 1994, the Kazakstan collaborators arrived in Israel for two weeks. During that time, new hydrogeological maps were presented. Evaluation of a multi-variable cluster analysis based on hydrochemical data was performed resulting in the establishment of a multi-cell flow pattern. This information was later incorporated into the mixing cell model, and results were presented to the team from Kazakstan during their second visit in November 1996. The final meeting for presenting findings to local water authorities and for verification was held in June 1997 in Almaty. The research teams reached common conclusions regarding the hydrological interpretations of the findings. A field trip to the Balkhash Basin was performed in order to examine the possibility of implementation the developed approach to the mechanism's of groundwater quality deterioration.

PROJECT PRODUCTIVITY

Though extending longer than expected, the project accomplished most of the proposed goals. All the listed objectives were accomplished, and the most important goal, the identification of sources of recharge and pollution and the quantification of the multi-aquifer flow system was achieved. Due to the complicated hydrogeological system of the local alluvial aquifer and different types of water quality in each water-bearing unit, the available data and the stage we managed to develop the model were not sufficient to accommodate a completely integrated data base that the model can exploit. However by dividing the flow system into integrated sub-aquifer units we managed to complete the project and to establish the flow pattern including internal flux connections between sub-

aquifers. Results identified active flow paths into and within the whole aquifer system and a quantitative assessment of external sources of recharge and internal fluxes between sub-aquifer units.

The assessment of natural sources of recharge provided necessary information about the global potential for fresh water development. Furthermore, locating and quantifying active sources of pollutants enable the assessment of the rate at which certain sections of the aquifer will deteriorate. Results provide an opportunity for safer and better managed local aquifer system.

FUTURE WORK

The positive results achieved with this project encouraged both teams to continue the scientific cooperation with implementation of a developed concept and numerical model for quantifying the hydrological features of a more complicated system such as in the Ily River Basin. If approved, we intend to propose the following project:

Assessing groundwater resources in the central part of Ily basin for irrigation and water supply

The Ily River Basin occupies an area of 130,000 km^2 in the southeastern part of the Kazakstan Republic. It exhibits tendencies of ecological deterioration as a result of anthropogenic activities. A decrease of discharge of the rivers in the basin was observed, together with a lowering of water level in the Balkhash Lake, desertification features over the entire area, and qualitative and quantitative changes in the groundwater, which is the central component of the ecological system.

Water exchange in the region under consideration occurs between different water bodies:

1. Rivers: Ily, Chilik, Charin, Kaskelen, Khorgos, Barakhurdzin.
2. Kapchagy water storage
3. Irrigated lands: Chingildinsky, Chiliksky, etc.
4. Groundwater of the Ily artesian basin, fissured water of the mountains
5. Balkhash Lake.

The number of hydrological objects to be included in a conceptual model may vary from a few dozen to several hundred. It composes a very complicated interconnected system. There are several interesting scientific and practical problems to be solved:

1. Quantitative assessment of the water exchange between these water components.
2. Seasonal, annual, and perennial dynamics of water exchange rates.
3. Quantitative evaluation of the water exchange between objects by heavy metals, fertilizers, herbicides, pesticides, sewage water and livestock farm water which contaminate water reservoirs.
4. Dynamics of pollutant exchange between objects.

During the Soviet era, Kazakstan had big state-run industrial and agricultural enterprises that consumed large amount of water which were normally collected form big rivers through channels and pipe-lines. As a result of on-going economic reforms, a large number of medium-size and small enterprises have appeared. These also require an increase

of water supply. Given the arid conditions in the south of Kazakstan, however, their demand can only be satisfied using groundwater that are expected to be evaluated in this project. The same problem faces other Central Asian countries that emerged following the break-up of the former Soviet Union.

Scientific objectives: 1) Getting to know the regularities of formation and distribution of groundwater in the study area; 2) Finding new groundwater for water supply and irrigation; 3) Finding out the possibility of using groundwater instead of surface water for water supply and irrigation so as to release the amount of surface water needed for maintaining the ecological balance of Lake Balkhash

Technical discussion: Intensive use of surface water in arid zone of South Kazakstan for irrigation and water supply has resulted in ecological disasters. In the Aral Sea basin, for instance, an ecological catastrophe has already taken place as a result of intensive drainage of rivers Amu-Daria and Syr-Daria. Similar events have also been noticed in Lake Balkhash basin, which is also a part of the study area. Therefore increasing the amount of ground water to be used will enable to save surface water and so to maintain the level of water in Lake Balkhash.

The Israeli technology for estimating the quantity of drainage and the replenishment of groundwater using information about natural tracers produces good results in the following cases: 1) when information about the hydraulic parameters of water horizons is insufficient; 2) when the climate of a region is arid, desert or semi-desert - as in the case of study area; 3) when information about hydrological structure and boundary conditions are scarce; 4) where the hydrological structure of the water environment is a complex one. These conditions are typical for the central part of Ily basin, as well as for most of the areas surrounding Lake Balkhash.

Since efforts to solve the problem of using groundwater in the study area have just started, groundwater are expected to be evaluated using three criteria, namely: 1) the predominant shelf of Zailisky Alatau hills which includes the alluvial fans of the following rivers: Chilik, Issyk, Turgen, Talgar, Bolshaya and Malaya Almatinka. Here can be found a water bearing horizon consisting of Quaternary (apQ) and Upper-Pliocene-Quaternary (apN^3_2) alluvial-prolluvial formations 200-500 m thick and which include artesian and non-artesian groundwater; 2) the piedmont lowland having Upper Quaternary alluvial deposits and Recent formations (aQ_{3-4}); 3) low pressure groundwater associated with Upper-Middle Quaternary formations (apQ_3, Q_2) found to a depth of 150 m; 4) High pressure groundwater associated with Upper Quaternary formations (aQ_{1-3}) with sufficient pressure to a depth of 70 m.

To substantiate the process of formation of groundwater, the value of underground drainage flowing from mountain side of a basin to an artesian basin has to be determined. For this purpose, a research has to be carried out including studies of the isotopes and tracer elements of rivers, glacial, snow and groundwater over the basin.

In this research we also intend to extrapolate results obtained for the South-Pribalkhash, Zharkent and Kopi basins. Later, the results of the study can also be used in Kyrgyzstan, Uzbekistan, Tadzhikistan, Turkmenistan and other countries with interconnecting basins located in arid zones.

LITERATURE CITED

Adar, E.,M., S. P. Neuman, and D. Woolhiser, 1988. Estimation of spatial recharge using environmental isotopes and hydrochemical data, I. Mathematical model and application to synthetic data, J. Hydrol., ,97, 251-277. .

Adar, E.,M., and S. P. Neuman, 1988., Estimation of spatial recharge using environmental isotopes and hydrochemical data, II. Application to Arava Valley in southern Arizona, U.S.A, J. Hydrol.,. 97, 279-302.

Adar E. M., and S. Sorek, 1989. Multi-compartmental modeling for aquifer parameter estimation using natural tracers in non-steady flow, Advances in Water Resources, (12) 2, 84-89.

Adar, E.M., and S. Sorek, 1990. " Numerical method for aquifer parameter estimation utilizing environmental tracers in a transient flow system". MODELCARE 90, International Conference on Calibration and Reliability in Groundwater Modeling, The Hague, Holland, K. Kovar, Ed. IAHS Pub. No. 195, pp 135-148.

Adar, E., E. Rosenthal, A.S. Issar and O. Batelaan. 1992 "Quantitative assessment of flow pattern in the southern Arava Valley (Israel) by environmental tracers in a mixing cell model." Journal of Hydrology Vol. 136, pp 333-354.

Akhmedsafin U.M., V.F. Shligina , F.V. Shestakov, V.M. Mirlas, V.D. Malakhov, L.P. Vetvitskaya, and O.J. Sidhikov, 1980. Ily artesian basin, Almaty, "Nauka" (in Russian).

Campana, M.F., and E.S. Simpson, 1984. Groundwater residence times and recharge rates using discrete-state compartment model and ^{14}C data, J. Hydrol., 72,171-185.

Kirk S.T. and Campana M.E., 1990.A deuterium-calibrated groundwater flow model of a regional carbonate-alluvial system. J. Hydrol., 119, 357-388.

Sidhikov J.S., V.V. Veselov, T.K. Aytuazov, R.Y. Achmetov, N.K. Mookitanov, A.K. Djakelov, O.K. Teenbekov, I.M. Malkovskii, V.F. Shligina, and M.H. Dzabasov, 1993. Water resources of the South-East Kazakstan. In the book: Problems of the Central Asian Water Resources (in Russian).

Sidhikov J.S., V.V. Veselov, A.K. Djakelov, O.V. Podolnii, V.F. Shligina, Yu.S. Lookianchicov, M.H. Dzabasov, M.H. Smoliar, G.G. Oshlakov, and V.M.

Mirlas, 1993. Groundwater of the South-East Kazakstan. In the book: Problems of the Central Asian Water Resources (in Russian).

Rosenthal, E., E. Adar, A.S. Issar and O. Batelaan, 1990. Definition of groundwater flow pattern by environmental tracers in the multiple aquifer system of Southern Arava Valley, Israel. J. Hydrol., 117:339-368.

Simpson, E.S. and Duckstein, L., 1976. Finite state mixing-cell models. In: V. Yevjevich (Editor), Karst Hydrology and Water Resources. Vol. 2. Water Resource Publications, Ft. Collins, Co., pp. 489-508.

V.V. Veselov, V.M. Mirlas, and V.P. Stepanenko, 1992. Problems of modeling and optimization of hydrogeological systems. Almaty, "Gylim".

V.V. Veselov and L.F. Spivak, 1993. Status and development prospects of computing technologies of natural objects and processes modeling in Kazakstan. In the book: Problems of the Central Asian Water Resources (in Russian).

Wolf, P., 1967. Methods of Non-linear Programming, Chap. 6. in: Interscience J. J. Abadie Ed., Wiley/ N.Y., 97-131.

Woolhiser, D.A., H.R. Gardner, and S.R. Olsen, 1982. Estimation of multiple inflows to a stream reach using water chemistry data, Trans. ASAE, 25(3), 616-622.

Appendix I

Hydrochemical data base used in the cluster analyses. The identification numbers are the same as used in the dendograms and the chemical tables (NUM).

Kazakhstan Level 01

Num	No	Code	X	Y	Level	TDS	Na	K	Ca	Mg	Cl	SO4
1	1	300052	20.8	34.9	1	366.67	18.867	1.9333	78.333	23	15.667	35
2	10	300067	34.4	41.3	1	280	43.45	2.15	43.5	23	33	62.5
3	11	300068	34.4	41.3	1	602	65.9	3.35	64	52.5	45	143.5
4	12	400021	40.5	52.1	1	650	16	0.5	90	55	99	84
5	13	400023	44	50.5	1	466	15.1	2.2	77	11	28.5	55
6	14	400024	40.2	50.5	1	552	42.5	2.25	100	33	18.5	55.5
7	16	400027	37	49.5	1	752	37.8	2.55	117	99	79.5	157.5
8	17	400028	40.2	51.5	1	681	74.1	1.6	103	39.5	96	85.5
9	18	400032	39.8	39	1	469	1.9	1.6	114.5	17.5	40	76
10	19	800001	46.1	18.2	0	116	3.5	0.6	30	5	3.5	13
11	2	300053	20.6	30.2	1	364.67	23.367	2.1667	78.667	19	17.667	39
12	20	800002	43.3	24	0	132	5.35	1.25	32	3.5	11	12
13	21	800003	42.3	31.3	0	134	3.7	0.7	32	5	1.8	16
14	22	800004	37.5	23.5	0	190	4	1.6	49	11	9	20
15	23	800005	35.5	28	0	160	10.5	1.1	33	6	5	25
16	24	800006	34.9	30.7	0	165.2	7.62	1.24	36.2	7	2.74	23.32
17	25	800007	34.2	34	0	160	11.7	1	31	6	5	26
18	26	800008	32.9	36.5	0	203	14.35	1.25	39.5	9	9	32
19	27	800009	31	18	0	116	5.2	0.8	24	2	3.5	25
20	28	800010	29.6	23.7	0	120	8.2	0.8	24	4	2	17.3
21	29	800011	27.3	27.1	0	110	3.5	0.9	26	3	1.8	20
22	3	300054	26.2	33.2	1	600.67	25.667	2.7667	131.67	22.333	25.333	72.333
23	30	800012	26.5	28.9	0	165	18.25	1.5	29	4	2	21.5
24	31	800013	26.6	31.4	0	106	3.5	1.7	26	4	3	11
25	32	800014	26.6	33.5	0	126	7	1.3	29	4.5	3.75	25.5
26	33	800015	22.5	18.2	0	84	2.5	1.1	20	2	2	12
27	36	1000003	33.5	37	0	246	15	3.4	52	7	16	88
28	37	1000004	40.5	49.8	0	220	11.7	1.6	48	10	11	12
29	38	1000005	41.2	42.7	0	1000	36.8	6.2	32	10	71	120
30	39	1000007	41.5	40.2	0	410	80.9	5.9	36	10	28	33
31	4	300055	28.2	34.9	1	493	20.05	2.45	116.5	12.5	45.5	78
32	40	1000008	26.6	28.5	0	680	91.7	5.68	52	32	177	59
33	41	1000009	32	35.8	0	1240	83.6	6.1	34.1	0	62	53.4
34	42	1000010	36.8	34.7	0	296	27.5	2.2	54	13	32	38
35	45	1000013	39.5	34.9	0	318	25.5	2.2	54	13	9	63
36	46	1000015	32.6	35	0	302	17.1	2.7	52	12	9	119
37	47	1000016	32	31.8	0	418	72.7	16	45	13	30	129
38	48	1000017	36.2	32.6	0	290	24	2.5	52	15	18	35
39	49	1000018	40.5	33.5	0	542	15	3.4	32	5	106	125
40	5	300056	30.9	35.4	1	774	60.8	5.4	159	20	77	70.5
41	50	1000019	31	31.7	0	358	30.8	3.7	76	15	22	53
42	51	1000020	30.5	32.2	0	282	1	0.1	22	0.6	21	72
43	52	1000021	46.2	37.7	0	384	15.8	2.2	80	22	106	56
44	53	1000022	32.8	31.4	0	414	65.4	2.5	55	12	21	47
45	54	1000023	23.3	29.5	0	460	125	5.9	28	10	60	57
46	55	1000024	36.2	34	0	278	18.3	1.9	54	12	7	145
47	56	1000025	31.2	31	0	310	29	6	59	9	27	35
48	57	1000027	25.2	28.5	0	422	45	6.6	68	17	16	55

1 Level 01

49	58	1000028	24.7	28.8	0	318	17.5	3.3	69	12	11	101
50	59	1000029	25.2	29.5	0	258	12.1	2.8	58	13	9	38
51	6	300057	34.7	37	1	673	54.1	3.15	111.5	38	87.5	132.5
52	60	1000030	24.5	27.5	0	286	14	2.6	64	12	11	3.9
53	61	1000031	31.2	28	0	380	23.3	14.5	28	7	43	49
54	62	1000032	31.8	28.6	0	180	6	1.4	40	7	14	36
55	63	1000033	33.3	28.7	0	734	140	24	44	12	62	43
56	65	1000035	30	25.5	0	302	28.5	6	38	13	14	67
57	66	1000036	30	24	0	184	28	6	30	4	12	20
58	67	1000037	36.5	35.8	0	442	26.9	2.85	106	4	21	207
59	7	300058	37.5	38.7	1	686	47.2	2.7	111	42.5	96	180.5
60	8	300059	37.3	37	1	555	29.05	2.25	121	23	59	104.5
61	9	300063	23.4	35.4	1	688.67	23.833	4.9333	166.67	34.333	52.333	66

Kazakhstan Level 01

NO3	NO2	HCO3	F	H4SI04	Ph	Boron	Petrol	Cd	Pest	Asphalt	Resin	Deter
21.433	0.2	321.67	1.32	17.067			0.1667	0.0012		0.004	0.004	
23	0.4	225	0.975	6.6			0.1	0.004				
30.015	0.15	342	1	7.2		0.18	0.1	0.0002				0.6
18.6	0.07	433	2.9	14.4		0.15	0.04	0.0004				0.05
32.5	0	290.5	0.3	17.05		0.28	0.1	0.0004				0.1
29.5	0.02	370	1.15	8.75			0.1	0.01				0.1
31.895	0.045	445.5	1.45	7.3			0.1					0.1
11.25	0	356.5	1.05	11.75			0.1	0.0002				0.2
70.15	0.25	227.5	0.6	9.3				0.0002				0.1
3.7	0.07	97	0.79	8.1	0.02		0.4	0.0004		0.04	0.01	0.6
21.397	0.05	289.67	0.97	17.833			0.2			0.004	0.004	
5.535	0.1	108.5	0.7	7.5	0.005	0.05	0.15	0.0012			0.01	0.2
4	0.1	113	0.72	8.4			0.2	0.0002			0.01	0.05
7.1		162	0.7	8.8			0.4				0.004	0.1
8.2		119	0.8				0.04	0.0008				0.05
1.87	0.14	128.8	0.65	7.3			0.2	0.002			0.004	
5.3		122	0.8				0.04	0.0006				
4.1	4.87	147.5	0.95	5			0.1	0.0002				0.05
3.1	0.05	79	0.67	8.1	0.001		0.4			0.004	0.02	
2.6	0.01	85	0.24	7.5			0.2	0.0002		0.01		0.1
3.1	0.01	92	0.67	10.9			0.3	0.003		0.004		0.05
47.563	0.0867	405	0.7667	20	0.002		0.08	0.0002			0.01	
4.1	0.01	128	0.75	5.6				0.008				
4.2		85	0.7	6.1			0.1	0.0008				
5.2	0.01	93	0.735	7.5			0.4	0.0015		0.004	0.01	
1.33		67	0.9	6	0.008		0.3	0.0008		0.004	0.004	
12.8	1.2	140	1.1	12.9	0.02		0.15	0.0008		0.004	0.01	
1.8		146	0.6	12.5			0.2				0.01	
1.8		660	0.7	2.8				0.002	0.1			
13.3		110	0.4	14.1			0.24	0.0002			0.004	
85.29	0.05	212	0.4	14.14			0.04	0.0001	0.001		0.004	
10.6		537	1.1	24.6	0.02		0.2			0.04		
1.33	2.5		1.2	7.1			0.2				0.04	
1.8		220	0.9	14.2			0.1	0.0003			0.002	
11.96	0.4	201	1.2	11.7	0.005		0.4			0.04	0.04	
14.8	2	98	0.9	13.8	0.005		0.1			0.004	0.01	
	1.6	220	0.8	12.2	0.002	1.6						
18.2	0.02	207	0.9	13.4			0.4	0.0003			0.004	
5.3	0.02	183	0.7	7.6	0.002		0.4				0.002	
117.35	0.3	369	0.35	13.35			0.4					
1.1		268	0.8	13	0.02		0.4			0.004	0.02	
1.13	0.8	110	0.7	10.4		1	0.14	0.0001		0.004	0.01	
27		122	0.7	12.4			0.1	0.0002				
		317	0.8	13.1	0.02							
5.3	0.02	305	0.7	5.5	0.02		0.4	0.0001			0.002	
11.08	0.5	79	1	13.2	0.006		0.4			0.01	0.01	
		244	0.9		0.001							
10.19	0.8	220	0.9	12.7	0.01	0.2						

3 Level 01

11.74	1.5	226	1.1	15	0.02					
20.4	2	201	0.9	11.3						
40.95	0.65	312.5	0.9	23.04	0.001		0.1	0.0003		
4.8	1	201	0.9	14				0.0012		
6.6	0.02	268	0.5	5.8	0.002		0.2		0.004	0.002
12	0.01	98	0.6	7.3	0.002		0.2	0.0002		
1.55		634	0.4	8		0.2	0.1			0.01
		214	0.8	12.9	0.02	0.2	0.4		0.04	0.04
10	0.6	155	0.8	7.7			0.4		0.4	0.004
8.5	0.905	6	6.25	11		0.2	0.04	0.0016		0.004
30.9	0.425	247	0.8	24.22			0.35		0.004	0.01
33.24	1	292.5	0.6	14.4			0.25	0.0002	0.01	0.02
84.113	0.1713	463.67	0.55	16.567		2	0.3		0.03	0.04

Kazakhstan Level 02

Num	No	Code	X	Y	Level	TDS	Na	K	Ca	Mg	Cl	SO4
1	1	300060	37.3	37	2	465	21.1	2.2	105.5	20.5	34.5	37
2	10	800005	35.5	28	0	160	10.5	1.1	33	6	5	25
3	11	800006	34.9	30.7	0	165.2	7.62	1.24	36.2	7	2.74	23.32
4	12	800007	34.2	34	0	160	11.7	1	31	6	5	26
5	13	800008	32.9	36.5	0	203	14.35	1.25	39.5	9	9	32
6	14	800009	31	18	0	116	5.2	0.8	24	2	3.5	25
7	15	800010	29.6	23.7	0	120	8.2	0.8	24	4	2	17.3
8	16	800011	27.3	27.1	0	110	3.5	0.9	26	3	1.8	20
9	17	800012	26.5	28.9	0	165	18.25	1.5	29	4	2	21.5
10	18	800013	26.6	31.4	0	106	3.5	1.7	26	4	3	11
11	19	800014	26.6	33.5	0	126	7	1.3	29	4.5	3.75	25.5
12	2	300061	39.6	36.8	2	504	23.1	2.1	122	22	28	109
13	20	800015	22.5	18.2	0	84	2.5	1.1	20	2	2	12
14	23	1000003	33.5	37	0	246	15	3.4	52	7	16	88
15	24	1000004	40.5	49.8	0	220	11.7	1.6	48	10	11	12
16	25	1000005	41.2	42.7	0	1000	36.8	6.2	32	10	71	120
17	26	1000007	41.5	40.2	0	410	80.9	5.9	36	10	28	33
18	27	1000008	26.6	28.5	0	680	91.7	5.68	52	32	177	59
19	28	1000009	32	35.8	0	1240	83.6	6.1	34.1	0	62	53.4
20	29	1000010	36.8	34.7	0	296	27.5	2.2	54	13	32	38
21	3	300064	23.4	35.4	2	497	15.05	8.35	113	26	22	55.5
22	32	1000013	39.5	34.9	0	318	25.5	2.2	54	13	9	63
23	33	1000015	32.6	35	0	302	17.1	2.7	52	12	9	119
24	34	1000016	32	31.8	0	418	72.7	16	45	13	30	129
25	35	1000017	36.2	32.6	0	290	24	2.5	52	15	18	35
26	36	1000018	40.5	33.5	0	542	15	3.4	32	5	106	125
27	37	1000019	31	31.7	0	358	30.8	3.7	76	15	22	53
28	38	1000020	30.5	32.2	0	282	1	0.1	22	0.6	21	72
29	39	1000021	46.2	37.7	0	384	15.8	2.2	80	22	106	56
30	40	1000022	32.8	31.4	0	414	65.4	2.5	55	12	21	47
31	41	1000023	23.3	29.5	0	460	125	5.9	28	10	60	57
32	42	1000024	36.2	34	0	278	18.3	1.9	54	12	7	145
33	43	1000025	31.2	31	0	310	29	6	59	9	27	35
34	44	1000027	25.2	28.5	0	422	45	6.6	68	17	16	55
35	45	1000028	24.7	28.8	0	318	17.5	3.3	69	12	11	101
36	46	1000029	25.2	29.5	0	258	12.1	2.8	58	13	9	38
37	47	1000030	24.5	27.5	0	286	14	2.6	64	12	11	3.9
38	48	1000031	31.2	28	0	380	23.3	14.5	28	7	43	49
39	49	1000032	31.8	28.6	0	180	6	1.4	40	7	14	36
40	50	1000033	33.3	28.7	0	734	140	24	44	12	62	43
41	52	1000035	30	25.5	0	302	28.5	6	38	13	14	67
42	53	1000036	30	24	0	184	28	6	30	4	12	20
43	54	1000037	36.5	35.8	0	442	26.9	2.85	106	4	21	207
44	6	800001	46.1	18.2	0	116	3.5	0.6	30	5	3.5	13
45	7	800002	43.3	24	0	132	5.35	1.25	32	3.5	11	12
46	8	800003	42.3	31.3	0	134	3.7	0.7	32	5	1.8	16
47	9	800004	37.5	23.5	0	190	4	1.6	49	11	9	20

1 Level 02

NO3	NO2	HCO3	F	H4SI04	Ph	Boron	Petrol	Cd	Pest	Asphalt	Resin	Deter
29.255	1.5	274.5	0.6	14.15			0.1	0.0002			0.007	
8.2		119	0.8				0.04	0.0008				0.05
1.87	0.14	128.8	0.65	7.3			0.2	0.002			0.004	
5.3		122	0.8				0.04	0.0006				
4.1	4.87	147.5	0.95	5			0.1	0.0002				0.05
3.1	0.05	79	0.67	8.1	0.001		0.4			0.004	0.02	
2.6	0.01	85	0.24	7.5			0.2	0.0002		0.01		0.1
3.1	0.01	92	0.67	10.9			0.3	0.003		0.004		0.05
4.1	0.01	128	0.75	5.6				0.008				
4.2		85	0.7	6.1			0.1	0.0008				
5.2	0.01	93	0.735	7.5			0.4	0.0015		0.004	0.01	
20.38	0.2	329	0.6	17.2		0.2	0.4	0.0002		0.004	0.004	
1.33		67	0.9	6	0.008		0.3	0.0008		0.004	0.004	
12.8	1.2	140	1.1	12.9	0.02		0.15	0.0008		0.004	0.01	
1.8		146	0.6	12.5			0.2				0.01	
1.8		660	0.7	2.8				0.002	0.1			
13.3		110	0.4	14.1			0.24	0.0002			0.004	
10.6		537	1.1	24.6	0.02		0.2			0.04		
1.33	2.5		1.2	7.1			0.2				0.04	
1.8		220	0.9	14.2			0.1	0.0003			0.002	
66.42	0.105	341.5	0.55	14.45	0.002		0.12	0.0003		0.004	0.02	
11.96	0.4	201	1.2	11.7	0.005		0.4			0.04	0.04	
14.8	2	98	0.9	13.8	0.005		0.1			0.004	0.01	
	1.6	220	0.8	12.2	0.002	1.6						
18.2	0.02	207	0.9	13.4			0.4	0.0003			0.004	
5.3	0.02	183	0.7	7.6	0.002		0.4				0.002	
1.1		268	0.8	13	0.02		0.4			0.004	0.02	
1.13	0.8	110	0.7	10.4		1	0.14	0.0001		0.004	0.01	
27		122	0.7	12.4			0.1	0.0002				
		317	0.8	13.1	0.02							
5.3	0.02	305	0.7	5.5	0.02		0.4	0.0001			0.002	
11.08	0.5	79	1	13.2	0.006		0.4			0.01	0.01	
		244	0.9		0.001							
10.19	0.8	220	0.9	12.7	0.01	0.2						
11.74	1.5	226	1.1	15	0.02							
20.4	2	201	0.9	11.3								
4.8	1	201	0.9	14				0.0012				
6.6	0.02	268	0.5	5.8	0.002		0.2			0.004	0.002	
12	0.01	98	0.6	7.3	0.002		0.2	0.0002				
1.55		634	0.4	8		0.2	0.1				0.01	
		214	0.8	12.9	0.02	0.2	0.4			0.04	0.04	
10	0.6	155	0.8	7.7			0.4			0.4	0.004	
8.5	0.905	6	6.25	11		0.2	0.04	0.0016			0.004	
3.7	0.07	97	0.79	8.1	0.02		0.4	0.0004		0.04	0.01	0.6
5.535	0.1	108.5	0.7	7.5	0.005	0.05	0.15	0.0012			0.01	0.2
4	0.1	113	0.72	8.4			0.2	0.0002			0.01	0.05
7.1		162	0.7	8.8			0.4				0.004	0.1

Kazakhstan Level 03

Num	No	Code	X	Y	Lev	TDS	Na	K	Ca	Mg	Cl
1	1	300062	39.6	36.1	3	322.00	15.00	1.90	68.00	19.00	32.00
2	2	300065	23.4	35.4	3	467.33	27.83	4.20	88.00	29.00	31.67
3	3	300066	39.6	36.8	3	260.00	60.90	6.90	12.00	11.00	48.00
4	4	400003	42.8	34	3	321.00	27.55	1.85	95.00	29.50	11.50
5	5	400017	28.7	26.1	3	422.00	15.00	0.50	89.00	54.00	12.00
6	6	500005	25.7	26.9	3	225.45					9.14
7	7	500006	25.1	26.5	3	249.71	7.63	3.61	57.57	13.71	6.71
8	8	500007	25.6	27	3	258.00	7.60	2.93	56.50	15.00	7.25
9	9	500008	26.4	27.1	3	332.00	9.47	3.10	75.00	12.67	12.33
10	10	500009	27.3	28.5	3	180.71	6.71	2.00	54.43	7.71	13.13
11	11	500011	34.9	30.5	3	347.29	10.27	2.31	77.78	14.44	16.68
12	12	500012	38.5	30.6	3	387.85	17.87	2.22	85.17	16.17	17.38
13	13	500013	35.8	32.6	3	379.11	20.89	2.73	102.43	20.71	20.35
14	14	500014	42.5	30.9	3	367.35	25.13	2.00	93.86	13.71	13.34
15	15	500015	42.7	31.9	3	485.25	37.83	2.38	110.50	20.33	22.54
16	16	500001	16.2	23.4	0	108.00	5.33	1.63	28.67	4.67	3.58
17	17	500002	15.8	24.4	0	140.00	7.07	1.37	32.33	6.00	6.67
18	18	500003	17.2	26.4	0	133.60	5.94	1.54	32.60	4.40	5.76
19	19	500004	22	26.4	0	271.29	10.54	2.90	64.06	11.21	8.88
20	20	500010	31.4	30.4	0	229.60	7.23	1.98	55.00	6.38	12.79
21	21	500016	38	49.6	0	130.04	12.61	1.74	24.34	6.91	5.20
22	22	500017	48.6	56.4	0	270.53	44.75	1.85	32.90	11.90	14.70
23	23	500018	36.4	51.6	0	103.48	9.66	1.71	23.21	4.54	3.66
24	24	500019	38.1	45.4	0	214.89	18.77	2.00	44.83	13.67	8.46
25	25	500020	46	50.9	0	222.99	27.59	1.60	37.67	10.56	10.25
26		100124	21.5	26.4	3	353	9.2	2.7	54	13	7
27		100130	22.3	26.5	3	262	9.2	2.4	54	11	5
28		100135	23.5	26.5	3	232	9.2	2.4	54	11	5
29		100135	23.5	26.5	3	234	9.2	2.4	56	10	5
30		100138	25.2	26.5	3	222	7	2.7	50	14	4
31		100138	25.2	26.5	3	236	7	2.4	60	14	5
32		100141	25.6	27	3	240	8.8	2.8	56	14	2
33		100144	26.1	27	3	272	7	2.4	70	10	2
34		100151	26.4	27.1	3	244	7	2.1	68	7	19
35		100155	24.3	26.7	3	236	8.5	2.7	54	13	5
36		100155	24.3	26.7	3	232	8.2	2.5	60	12	5

1 Level 03

Num	No	Code	SO4	NO3	NO2	HCO3	F	H4SI04
1	1	300062	35.00	31.00		207.00	0.70	12.40
2	2	300065	73.67	66.85	1.25	304.67	0.43	10.47
3	3	300066	58.00	7.31	0.50	79.00	0.70	5.00
4	4	400003	51.00	23.65		360.00	1.90	11.75
5	5	400017	72.00	0.40		433.00	2.90	7.80
6	6	500005	15.37	2.84			0.78	
7	7	500006	19.71	12.81		207.43	0.90	17.25
8	8	500007	17.00	14.23		213.00	0.86	14.80
9	9	500008	27.67	21.87		254.67	0.22	4.53
10	10	500009	19.48	15.41	6.00	157.00	0.63	11.53
11	11	500011	52.19	19.70	0.60	199.30	0.71	17.08
12	12	500012	47.67	26.98	0.55	265.33	0.46	16.36
13	13	500013	46.48	36.25		301.14	0.73	21.13
14	14	500014	53.79	21.82	0.09	250.43	0.66	17.50
15	15	500015	80.32	32.33	0.10	304.00	0.74	14.68
16	16	500001	11.55	6.35		99.67	1.10	9.47
17	17	500002	16.33	7.10	0.07	105.67	1.18	10.30
18	18	500003	15.80	3.98	0.01	112.40	1.26	11.10
19	19	500004	18.79	13.19		248.83	0.72	19.70
20	20	500010	17.26	16.69	0.70	153.50	0.69	15.00
21	21	500016	13.01	3.69	0.01	119.86	1.10	14.77
22	22	500017	65.86	5.17	0.24	158.80	1.20	16.66
23	23	500018	8.90	2.06	0.40	99.31	1.01	15.29
24	24	500019	31.76	10.46		187.83	1.01	15.65
25	25	500020	45.02	4.70	0.01	158.89	1.07	17.19
26		100124	18	14.84	20	220	0	14
27		100130	26	16.83	0	232	0.9	15.3
28		100135	9	16.2	0	186	0.93	13.5
29		100135	17	19	0.4	201	0.9	13.6
30		100138	16	14.2	0	210	0.85	13
31		100138	22	13.9	0.1	232	0.85	12.8
32		100141	22	11.96	0	207	0.85	18.8
33		100144	19	21.8	0	244	0.85	15.1
34		100151	19	25.5	0	195	0.8	12.3
35		100155	17	13.3	0	220	0.93	13.8
36		100155	30	25.9	0	268	0.85	14.5

Kazakhstan Level 04

Num	No	Code	X	Y	Leve	TDS	Na	K	Ca	Mg	Cl
1	1	300027	26.5	27.2	4	174.00	9.50	2.30	37.50	8.50	4.00
2	2	300028	26.4	27.1	4	288.00	29.00	3.40	46.00	8.00	7.00
3	3	300029	26.3	27.1	4	276.00	31.00	2.70	38.00	8.00	14.00
4	4	300030	26.5	27.2	4	204.00	10.00	2.55	46.50	8.50	9.50
5	5	300031	26.4	27.1	4	260.00	28.00	2.80	40.00	7.00	14.00
6	6	300032	26.3	27.1	4	310.00	26.00	2.70	64.00	13.00	5.00
7	7	300033	29.7	18.8	4	242.00	9.00	2.60	66.00	4.00	11.00
8	8	300034	29.8	18.8	4	144.00	9.00	2.35	30.50	5.50	3.00
9	9	300035	29.9	18.8	4	144.00	12.00	2.00	28.00	5.00	2.00
10	10	300036	29.7	18.8	4	220.00	10.50	2.25	52.50	5.50	14.50
11	11	300037	29.8	18.8	4	180.00	10.00	2.70	32.00	5.00	4.00
12	12	300038	34.9	30.5	4	388.00	9.40	2.60	76.00	15.00	25.00
13	13	300039	34.9	30.6	4	224.00	9.00	2.00	50.00	7.00	9.00
14	14	300041	27.1	28.5	4	152.00	5.00	1.30	38.00	7.00	4.00
15	15	300042	42.4	30.9	4	320.00	13.00	2.00	78.00	11.00	12.00
16	16	300043	42.4	30.9	4	356.00	21.00	2.20	85.00	12.00	12.00
17	17	300044	42.6	31.1	4	444.00	81.00	7.10	47.00	15.00	27.00
18	18	300045	5.5	22.7	4	259.00	124.00	3.10	42.00	21.00	80.00
19	19	300046	11.2	25.1	4	157.00	15.00	1.90	26.00	4.00	9.50
20	20	300047	21.5	37.5	4	141.00	29.00	1.40	16.00	1.00	4.00
21	21	300048	46	51.1	4	206.67	24.00	1.13	32.67	7.67	8.33
22	22	300050	46	51.1	4	198.00	30.83	1.57	25.67	5.33	7.00
23	23	300051	46	51.1	4	278.00	3.90	2.80	34.00	12.00	11.00
24	24	300022	15.8	23.4	4	150.00	8.00	1.50	26.00	3.00	2.00
25	25	300023	15.8	23.4	4	130.00	11.00	3.50	23.00	3.00	4.00
26	26	300024	15.8	23.4	4	124.00	11.00	3.50	23.00	4.00	5.00
27	27	300025	15.8	23.4	4	140.00	9.00	1.30	26.00	2.00	2.00
28	28	300026	15.8	24.4	4	112.00	4.00	2.00	26.00	5.00	4.00
29	29	500001	16.2	23.4	0	108.00	5.33	1.63	28.67	4.67	3.58
30	30	500002	15.8	24.4	0	140.00	7.07	1.37	32.33	6.00	6.67
31	31	500003	17.2	26.4	0	133.60	5.94	1.54	32.60	4.40	5.76
32	32	500010	31.4	30.4	0	229.60	7.23	1.98	55.00	6.38	12.79
33	33	500016	38	49.6	0	130.04	12.61	1.74	24.34	6.91	5.20
34	34	500017	48.6	56.4	0	270.53	44.75	1.85	32.90	11.90	14.70
35	35	500018	36.4	51.6	0	103.48	9.66	1.71	23.21	4.54	3.66
36	36	500019	38.1	45.4	0	214.89	18.77	2.00	44.83	13.67	8.46
37	37	500020	46	50.9	0	222.99	27.59	1.60	37.67	10.56	10.25
38	38	500021	48.6	52.2	0	258.32	37.79	1.56	31.00	10.50	15.58

1 Level 04

Num	No	Code	SO4	NO3	NO2	HCO3	F	H4SI04
1	1	300027	17.00	5.85	0.20	146.00	0.99	20.35
2	2	300028	81.00	4.90	0.08	152.00	1.20	16.80
3	3	300029	71.00	3.50	0.03	134.00	1.40	20.80
4	4	300030	24.50	15.95	0.30	148.00	0.93	18.65
5	5	300031	67.00	4.40	0.03	122.00	1.40	18.90
6	6	300032	14.00			289.00	1.50	20.00
7	7	300033	28.00	19.00	0.03	171.00	0.80	23.20
8	8	300034	19.00	3.95	0.10	117.50	0.85	19.75
9	9	300035	19.00	4.40		116.00	0.90	20.00
10	10	300036	7.90	25.75	0.77	132.50	0.80	20.30
11	11	300037	32.00	5.00	0.08	107.00	1.10	19.20
12	12	300038	101.00	14.40		152.00	0.60	20.80
13	13	300039	38.00	0.03		156.00	0.90	21.60
14	14	300041	15.00	9.80		122.00	0.72	
15	15	300042	37.00	13.30		238.00	0.60	22.70
16	16	300043	46.00	21.50		278.00	0.70	25.80
17	17	300044	136.00	0.03	2.70	214.00	1.40	23.50
18	18	300045	208.00	11.60		156.00	2.00	24.30
19	19	300046	10.50	2.40	0.03	104.00	1.29	17.70
20	20	300047	27.00	2.30		83.50	1.93	
21	21	300048	28.67	3.37	0.03	151.67	1.10	23.47
22	22	300050	30.67	3.10	0.12	130.00	1.20	23.30
23	23	300051	58.00	4.00	0.01	171.00	1.10	27.20
24	24	300022	10.00	5.30		98.00	1.20	16.00
25	25	300023	9.00	1.30	0.08	98.00		15.40
26	26	300024	9.00	1.30	0.05	98.00		16.00
27	27	300025	14.00	4.90		98.00	1.20	16.30
28	28	300026	9.00	1.00	0.80	95.00	1.30	20.00
29	29	500001	11.55	6.35		99.67	1.10	9.47
30	30	500002	16.33	7.10	0.07	105.67	1.18	10.30
31	31	500003	15.80	3.98	0.01	112.40	1.26	11.10
32	32	500010	17.26	16.69	0.70	153.50	0.69	15.00
33	33	500016	13.01	3.69	0.01	119.86	1.10	14.77
34	34	500017	65.86	5.17	0.24	158.80	1.20	16.66
35	35	500018	8.90	2.06	0.40	99.31	1.01	15.29
36	36	500019	31.76	10.46		187.83	1.01	15.65
37	37	500020	45.02	4.70	0.01	158.89	1.07	17.19
38	38	500021	61.72	3.98		154.88	1.26	17.77

Appendix II

Results obtained with the mixing cell model:

```
*****************************************************************
** Estimation of flow into and between cells and transmissivities **
**                  program  KAZAK                  **
*****************************************************************
```

Kazakhstan Model of level 1

There are 15 potential inputs.
There are 11 tracers to be considered.
There are 6 cells in this model.
There are 6 flows between the cells.

N = 15 NN = 21 NOC = 6 NOP = 11

Number of inflows to each cell:

Num.cell	1	2	3	4	5	6
Inflows	2	2	3	3	2	3

Number of internal flows from & into each cell:

Num.cell	1	2	3	4	5	6
Intertl.	2	1	1	3	2	3

The internal flows are:

From cell	1	2	4	4	4	5
To cell	6	6	3	5	6	1

The rate of output (pumpage) and/or evapotranspiration
out of each cell is [m3/time]:

PM(1) = 0.00
PM(2) = 0.00
PM(3) = 4825.00
PM(4) - 0.00
PM(5) = 403.20
PM(6) = 1071.00
CONSTANT FOR FLOWS = 62.992
PM(1) = 0.00
PM(2) = 0.00
PM(3) = 76.60
PM(4) = 0.00
PM(5) = 6.40
PM(6) = 17.00

****

The outflow out of the last cell is [m3/year]:
QOUT = 0.00

The input data used in the programm are:

NAME	TDS	Na	K	Ca	Mg	Cl	SO4	NO3	HCO3	F	H4S04
1 Rivers	139.150	7.260	1.120	30.710	5.070	4.340	19.970	4.230	108.453	0.718	7.446
2 S-1	369.000	27.050	9.100	52.000	11.000	32.500	51.000	3.850	268.000	0.650	9.400
3 Riv.	139.150	7.260	1.120	30.710	5.070	4.340	19.970	4.230	108.453	0.718	7.446
4 S-2	231.000	3.500	0.750	31.000	3.800	17.500	54.000	6.570	104.000	0.650	8.850
5 Riv.	139.150	7.260	1.120	30.710	5.070	4.340	19.970	4.230	108.453	0.718	7.446
6 S-3	396.500	64.850	4.380	50.750	13.500	28.750	48.500	11.230	262.250	0.825	11.175
7 Level-2	488.670	19.750	4.220	113.500	22.830	28.170	67.170	38.690	315.000	0.580	15.270
8 Riv.	139.150	7.260	1.120	30.710	5.070	4.340	19.970	4.230	108.453	0.718	7.446
9 S-4	444.500	34.650	3.590	63.500	10.250	65.250	105.250	13.530	118.750	0.608	11.275
10 Level-2	488.670	19.750	4.220	113.500	22.830	28.170	67.170	38.690	315.000	0.580	15.270
11 Level-2	488.670	19.750	4.220	113.500	22.830	28.170	67.170	38.690	315.000	0.580	15.270
12 S_5-6	913.500	88.030	10.500	40.550	13.500	93.000	68.850	3.820	622.800	0.850	10.620
13 Riv.	139.150	7.260	1.120	30.710	5.070	4.340	19.970	4.230	108.453	0.718	7.446
14 Level-2	488.670	19.750	4.220	113.500	22.830	28.170	67.170	38.690	315.000	0.580	15.270
15 S-6	707.000	115.850	14.840	48.000	22.000	119.500	51.000	6.080	585.500	0.750	16.300
16 cell-1	280.000	43.450	2.150	43.500	23.000	33.000	62.500	23.000	225.000	0.975	6.600
17 cell-2	365.670	21.120	2.050	78.500	21.000	16.670	37.000	21.420	305.667	1.145	17.450
18 cell-3	466.000	15.100	2.200	77.000	11.000	28.500	55.000	32.500	290.500	0.300	17.050
19 cell-4	481.000	18.000	2.030	115.500	15.000	42.750	77.000	77.720	219.750	0.500	11.720
20 cell-5	621.380	48.360	2.580	106.020	35.830	61.050	110.620	31.920	332.214	0.895	15.623
21 cell-6	716.170	34.610	3.350	133.170	52.080	76.960	94.500	62.990	427.792	1.313	12.904

BEST AVAILABLE COPY

The weighting parameters are:

1.000 1.000 1.000 1.000 1.000 1.000 1.000 1.000 1.000 1.000 1.000

The unknown inflows are:

	Name of inflow		Rate of inflow	Perc. of tot. inflow	Perc. of cell inflow
Cell 1					
1	Rivers	=	4.7871	4.6 %	80.0 % 301.5503
2	S-1	=	1.1969	1.1 %	20.0 % 75.3924
Cell 2					
3	Riv.	=	1.2463	1.2 %	76.9 % 78.5082
4	S-2	=	0.3742	0.4 %	23.1 % 23.5688
Cell 3					
5	Riv.	=	21.3179	20.3 %	31.1 % 1342.8574
6	S-3	=	0.0000	0.0 %	0.0 % 0.0000
7	Level-2	=	47.1352	44.9 %	68.9 % 2969.1388
Cell 4					
8	Riv.	=	0.0000	0.0 %	0.0 % 0.0000
9	S-4	=	0.6813	0.6 %	8.7 % 42.9143
10	Level-2	=	7.1269	6.8 %	91.3 % 448.9406
Cell 5					
11	Level-2	=	5.8735	5.6 %	87.9 % 369.9840
12	S_5-6	=	0.8075	0.8 %	12.1 % 50.8665
Cell 6					
13	Riv.	=	0.0000	0.0 %	0.0 % 0.0000
14	Level-2	=	14.5423	13.8 %	100.0 % 916.0488
15	S-6	=	0.0000	0.0 %	0.0 % 0.0000

The intermediate flows are:

From cell	To cell	Rate of flow	Real number
1	6	5.164	325.30
2	6	1.037	65.32
4	3	7.615	479.71
4	5	0.000	0.00
4	6	1.175	74.03
5	1	0.113	7.10

Total: 105.089061 100.000000 %

QOUT - PPP = 100.000000

Absolute diff.: 5.089061

Percentage diff.: 5.089061 %

**** Ion balance over the entire basin ***

Id	SUMIN	SUMOUT	Abs. error:	Perc. error:
TDS	41867.355	51847.988	-9980.63	-19.2%
Na	1801.835	2054.603	-252.77	-12.3%
K	367.871	241.985	125.89	52.0%
Ca	9465.745	8840.763	624.98	7.1%
Mg	1876.040	1957.381	-81.34	-4.2%
Cl	2387.379	3882.271	-1494.89	-38.5%
SO4	5770.867	6527.598	-756.73	-11.6%
NO3	3024.354	3764.683	-740.33	-19.7%
HCO3	27433.369	31651.264	-4217.89	-13.3%
F	65.073	51.032	14.04	27.5%
H4S04	1374.809	1625.375	-250.57	-15.4%

BEST AVAILABLE COPY

Total salt transport:

Observed output (LB/DAY): 606865.3
Estimated input (LB/DAY): 515061.0

Percent difference between Est. input and Obs. salt output:-15.13 %

```
*****************************************************************
** Estimation of flow into and between cells and transmissivities **
**                program KAZAK                                  **
*****************************************************************
```

Kazakhstan: Results for level 3, with outflow to level 4 and inflow from 2

There are 10 potential inputs.
There are 11 tracers to be considered.
There are 7 cells in this model.
There are 9 flows between the cells.

N = 10 NN = 17 NOC = 7 NOP = 11

Number of inflows to each cell:

Num.cell	1	2	3	4	5	6	7
Inflows	1	0	2	2	2	1	2

Number of internal flows from & into each cell:

Num.cell	1	2	3	4	5	6	7
Interfl.	2	1	3	4	2	4	2

The internal flows are:

From cell	1	3	3	3	4	4	6	7	7
To cell	6	1	4	6	5	6	2	4	5

The rate of output (pumpage) and/or evapotranspiration
out of each cell is [m3/time]:

PM(1) = 0.00
PM(2) = 81000.00
PM(3) = 29300.00
PM(4) = 57800.00
PM(5) = 82000.00
PM(6) = 70600.00
PM(7) = 56700.00
CONSTANT FOR FLOWS = 3774.000
PM(1) = 0.00
PM(2) = 21.46
PM(3) = 7.76
PM(4) = 15.32
PM(5) = 21.73
PM(6) = 18.71
PM(7) = 15.02

****

The outflow out of the last cell is [m3/year]:
QOUT = 0.00

The input data used in the programm are:

NAME	TDS	Na	K	Ca	Mg	Cl	SO4	NO3	HCO3	F	H4S04
1 Rivers	139.150	7.260	1.120	30.710	5.070	4.340	19.970	4.230	108.453	0.718	7.450
2 Rivers	139.150	7.260	1.120	30.710	5.070	4.340	19.970	4.230	108.453	0.718	7.450
3 Level-2	488.670	19.750	4.220	113.500	22.830	28.170	67.170	38.690	315.000	0.580	15.270
4 Rivers	139.150	7.260	1.120	30.710	5.070	4.340	19.970	4.230	108.453	0.718	7.450
5 Level-2	488.670	19.750	4.220	113.500	22.830	28.170	67.170	38.690	315.000	0.580	15.270
6 Rivers	139.150	7.260	1.120	30.710	5.070	4.340	19.970	4.230	108.453	0.718	7.450
7 Level-2	488.670	19.750	4.220	113.500	22.830	28.170	67.170	38.690	315.000	0.580	15.270
8 Level-2	488.670	19.750	4.220	113.500	22.830	28.170	67.170	38.690	315.000	0.580	15.270
9 Level-2	488.670	19.750	4.220	113.500	22.830	28.170	67.170	38.690	315.000	0.580	15.270
10 Rivers	139.150	7.260	1.120	30.710	5.070	4.340	19.970	4.230	108.453	0.718	7.450
11 cell 1(1a)	127.200	6.110	1.510	31.200	5.020	5.330	14.560	5.810	105.911	1.180	10.290
12 cell 2(1b)	116.760	11.140	1.730	23.770	5.730	4.430	10.960	2.880	109.585	1.060	15.030
13 cell 3	254.740	7.930	2.770	59.610	12.340	5.190	22.340	18.310	232.886	0.870	15.390
14 cell 4(4a)	229.600	7.230	1.980	55.000	6.380	12.780	17.260	16.690	153.500	0.690	15.000
15 cell 5(4b)	218.940	23.180	1.800	41.250	12.110	9.350	38.390	7.580	173.361	1.040	16.420
16 cell 6(5)	319.570	11.050	2.650	65.270	13.970	15.050	24.860	20.220	232.625	0.410	12.660
17 cell 7(6)	405.700	23.300	2.640	93.000	19.060	20.330	59.020	33.990	270.812	0.620	16.200

The weighting parameters are:

BEST AVAILABLE COPY

1.000 1.000 1.000 1.000 1.000 1.000 1.000 1.000 1.000 1.000 1.000

The rest of the variables are equal to zero.

The unknown inflows are:

	Name of inflow		Rate of inflow	Perc. of tot. inflow	Perc. of cell inflow	
Cell 1						
1	Rivers	=	2.1017	2.2 %	100.0 %	7931.8191
Cell 2						
Cell 3						
2	Rivers	=	10.5227	11.0 %	77.1 %	39712.5893
3	Level-2	=	3.1254	3.3 %	22.9 %	11795.1331
Cell 4						
4	Rivers	=	14.0356	14.6 %	75.1 %	52970.3566
5	Level-2	=	4.6494	4.8 %	24.9 %	17546.7535
Cell 5						
6	Rivers	=	24.7914	25.8 %	93.1 %	93562.6434
7	Level-2	=	1.8367	1.9 %	6.9 %	6931.5903
Cell 6						
8	Level-2	=	16.5785	17.3 %	100.0 %	62567.2516
Cell 7						
9	Level-2	=	13.1021	13.7 %	71.6 %	49447.2940
10	Rivers	=	5.1963	5.4 %	28.4 %	19610.9708

The intermediate flows are:

From cell	To cell	Rate of flow	Real number
1	6	1.644	6205.76
3	1	0.000	0.00
3	4	0.000	0.00
3	6	3.643	13748.97
4	5	0.000	0.00
4	6	3.079	11620.97
6	2	14.902	56240.87
7	4	0.000	0.00
7	5	2.680	10113.78

Total: 95.939693 100.000000 %

QOUT + PPP = 100.000000

Absolute diff.: 4.060307

Percentage diff.: 4.060307 %

**** Ion balance over the entire basin ***

Id	SUMIN	SUMOUT	Abs. error:	Perc. error:
TDS	27083.349	24830.481	2252.87	9.1%
Na	1187.279	1471.803	-284.52	-19.3%
K	229.258	217.306	11.95	5.5%
Ca	6199.293	5329.784	869.51	16.3%
Mg	1184.240	1127.308	56.93	5.1%
Cl	1352.707	1121.230	231.48	20.6%
SO4	3770.498	2858.898	911.60	31.9%
NO3	1759.827	1513.188	246.64	16.3%
HCO3	18520.593	18697.989	-177.40	-0.9%
F	63.462	79.654	-16.19	-20.3%
H4SO4	1022.014	1508.779	-486.77	-32.3%

Total salt transport:

Observed output (LB/DAY): 317108.4
Estimated input (LB/DAY): 336624.5

BEST AVAILABLE COPY

```
*****************************************************************
** Estimation of flow into and between cells and transmissivities **
**                program KAZAK                  **
*****************************************************************
```

Kazakhstan Model of level 4 with level 3 and 5

There are 11 potential inputs.
There are 11 tracers to be considered.
There are 6 cells in this model.
There are 6 flows between the cells.

N = 11 NN = 17 NOC = 6 NOP = 11

Number of inflows to each cell:

Num.cell	1	2	3	4	5	6
Inflows	2	2	2	2	1	2

Number of internal flows from & into each cell:

Num.cell	1	2	3	4	5	6
Intertl.	3	2	1	2	1	3

The internal flows are:

From cell	1	2	2	4	4	5
To cell	6	1	3	1	6	6

The rate of output (pumpage) and/or evapotranspiration
out of each cell is [m3/time]:

PM(1) = 29070.00
PM(2) = 7035.00
PM(3) = 31941.01
PM(4) = 500.00
PM(5) = 5870.00
PM(6) = 34300.00
CONSTANT FOR FLOWS = 1087.160
PM(1) = 26.74
PM(2) = 6.47
PM(3) = 29.38
PM(4) = 0.46
PM(5) = 5.40
PM(6) = 31.55

****

The outflow out of the last cell is [m3/year]:
QOUT = 0.00

The input data used in the programm are:

NAME	TDS	Na	K	Ca	Mg	Cl	SO4	NO3	HCO3	F	H4S04
1 Level5	134.000	8.600	1.600	25.000	5.000	2.000	7.000	1.800	106.000	0.900	21.600
2 Lev3(cell5)	218.940	23.180	1.800	41.250	12.110	9.350	38.390	7.580	173.361	1.040	16.420
3 Level5	134.000	8.600	1.600	25.000	5.000	2.000	7.000	1.800	106.000	0.900	21.600
4 Lev3(cell7)	405.700	23.300	2.640	93.000	19.060	20.330	59.020	33.990	270.812	0.620	16.200
5 Level5	134.000	8.600	1.600	25.000	5.000	2.000	7.000	1.800	106.000	0.900	21.600
6 Lev3(cell7)	405.700	23.300	2.640	93.000	19.060	20.330	59.020	33.990	270.812	0.620	16.200
7 Level5	134.000	8.600	1.600	25.000	5.000	2.000	7.000	1.800	106.000	0.900	21.600
8 Level3(cell3)	254.740	7.930	2.770	59.610	12.340	5.190	22.340	18.310	232.886	0.870	15.390
9 Level5	134.000	8.600	1.600	25.000	5.000	2.000	7.000	1.800	106.000	0.900	21.600
10 Level5	134.000	8.600	1.600	25.000	5.000	2.000	7.000	1.800	106.000	0.900	21.600
11 Level 3	319.570	11.050	2.650	65.270	13.970	15.050	24.860	20.220	232.625	0.410	12.660
12 Cell_1	208.660	15.920	2.070	42.530	7.570	8.600	28.350	9.320	148.890	1.000	20.290
13 Cell_2	363.600	30.080	3.320	70.000	13.200	16.200	66.800	12.310	234.200	0.960	22.560
14 Cell_3	268.950	28.810	2.070	32.630	11.470	13.760	61.860	4.380	161.560	1.180	20.540
15 Cell_4	274.670	29.330	2.970	41.330	7.670	11.670	73.000	4.267	136.000	1.330	18.830
16 Cell_5	107.830	6.330	1.780	25.960	4.740	3.740	9.820	3.140	97.990	1.140	14.920
17 Cell_6	142.960	11.450	1.510	27.660	4.290	4.890	15.210	4.930	105.430	1.230	14.360

The weighting parameters are:

1.000 1.000 1.000 1.000 1.000 1.000 1.000 1.000 1.000 1.000 1.000

The unknown inflows are:

	Name of inflow		Rate of inflow	Perc. of tot. inflow	Perc. of cell inflow	
Cell 1						
1	Level5	=	9.0584	8.4 %	32.9 %	9847.9579
2	Lev3(cell5)	=	18.4924	17.1 %	67.1 %	20104.2487
Cell 2						
3	Level5	=	18.8426	17.4 %	63.7 %	20484.8877
4	Lev3(cell7)	=	10.7333	9.9 %	36.3 %	11668.8645
Cell 3						
5	Level5	=	14.5236	13.4 %	85.3 %	15789.5083
6	Lev3(cell7)	=	2.5015	2.3 %	14.7 %	2719.5471
Cell 4						
7	Level5	=	2.3426	2.2 %	75.8 %	2546.8122
8	Level3(cell3)	=	0.7468	0.7 %	24.2 %	811.8561
Cell 5						
9	Level5	=	10.4297	9.7 %	100.0 %	11338.7446
Cell 6						
10	Level5	=	15.9546	14.8 %	78.5 %	17345.2146
11	cell 6(5)	=	4.3604	4.0 %	21.5 %	4740.4477

The intermediate flows are:

From cell	To cell	Rate of flow	Real number
1	6	0.000	0.00
2	1	0.000	0.00
2	3	13.849	15056.61
4	1	0.000	0.00
4	6	1.588	1725.89
5	6	5.618	6107.60

Total: 107.986017 100.000000 %
QOUT + PPP = 100.000000

Absolute diff.: 7.986017

Percentage diff.: 7.986017 %

**** Ion balance over the entire basin ***

Id	SUMIN	SUMOUT	Abs. error:	Perc. error:
TDS	20536.109	21053.046	-516.94	-2.5%
Na	1403.035	1875.699	-472.66	-25.2%
K	195.693	196.269	-0.58	-0.3%
Ca	4101.562	3580.724	520.84	14.5%
Mg	902.088	789.296	112.79	14.3%
Cl	653.772	918.902	-265.13	-28.9%
SO4	2114.189	3574.257	-1460.07	-40.8%
NO3	819.939	632.013	187.93	29.7%
HCO3	15520.341	14161.363	1358.98	9.6%
F	93.912	113.194	-19.28	-17.0%
H4S04	2121.620	1834.276	287.34	15.7%

Total salt transport:

Observed output (LB/DAY): 262990.6
Estimated input (LB/DAY): 261550.8

Percent difference between Est. input and Obs. salt output: -0.55 %

BEST AVAILABLE COPY