PN-ACB-478 95534

AID-1

THE RAND CORPORATION

SILVER SPRING, MARYLAND

FINAL REPORT

EVALUATION OF AID'S ECONOMIC AND SOCIAL DATA BANK

December 31, 1984

Prepared for:

William J. Follen
Office for Information Resources Management
Universal North Building, Room 725
1875 Connecticut Avenue (SA-12) N.W.
Washington, D.C. 20523

BEST AVAILABLE COPY

Final Report

Evaluation of AID's Economic and Social Data Bank

Prepared for:

William J. Follen
Office for Information Resources Management
Universal North Building, Room 725
1875 Connecticut Avenue (SA-12) NW
Washington, DC 20523

THE ORKAND CORPORATION

TABLE OF CONTENTS

Chapter		Page
I.	INTRODUCTION	1
II.	BACKGROUND OF THE ESDB SYSTEM	3
	Purpose of the System	3
	History of the System	3
III.	SYSTEM STATUS (10/84)	6
	System Users	6
	System Operations	9
IV.	ESDB ISSUES	15
	Documentation	15
	Manpower Resources	15
	IRM and CDIE Coordination	16
	Expansion of the ESDB	16
V.	RECOMMENDATIONS	17
APPENDICES		
A	CP REPORT	A-1
B	HUMAN RIGHTS REPORT	B-1
C	ESDB DATA TAPE INPUT SCHEDULE	C-1
D	PROC CONTENTS OF ESDB SAS FILES IN PRODUCTION ENVIRONMENT	D-1
E	CDIE WRITTEN DOCUMENTATION FOR ESDB	E-1
F	MEMBERS OF ESDB OPERATING SYSTEMS PDS's IN PRODUCTION ENVIRONMENT AND NEW SAS REPORT GENERATOR	F-1

LIST OF EXHIBITS

Exhibit		Page
II-1	AID-Contractor Roles for Development, Operations and Maintenance of ESDB	5
III-1	ESDB Users and Products	7
III-2	ESDB System Development Status	8
III-3	ESDB Data Sources	11
III-4	Status of ESDB Data Inputs	12
III-5	ESDB SAS Data Sets and Operating System	13

I. INTRODUCTION

The Information and Resource Management Office of the Bureau for Management of the Agency For International Development (AID/M/IRM) has contracted with The Orkand Corporation to conduct a study of the Economic and Social Data Bank (ESDB) and write an evaluation of the system. The status of ESDB is described in the statement of work in the following manner:

> The AID Center for Development Information and Evaluation, Bureau for Program and Policy Coordination (PPC/CDIE) has among its responsibilities, the administration of a program of analytical studies of quantitative and non-quantitative development information relating AID's program experience and information on trends in the developing countries and technical information.
>
> The Economic and Social Data Bank (ESDB) has been established by PPC/CDIE and its predecessors to help meet this requirement. It consists of several data bases each containing economic and social time series statistical data for about 180 countries. Data are obtained from a wide range of sources in various formats and provide information for many special research projects in addition to normally scheduled reports. The data bank and supporting system are dynamic in nature and modified on a regular basis to meet changing demands for information. The system has been converted recently from INQUIRE to SAS and development has been spontaneous.

The role of IRM and the reasons for this study are described by the work statement as follows:

> The AID Office of Information Resources Management, Bureau for Management has among its responsibilities the provision of management consulting services to Agency managers and to help systems owners, in this case PPC/CDIE, to manage those systems maintained on the Agency's central mainframe computer. This latter responsibility includes the provision of programming support within fixed operating constraints. Over a period of several months there has been an increasing effort between these two offices to adequately define and forecast an appropriate level of SAS support to meet CDIE's operational requirements; needs which currently outstrip available resources and lead to delays and frustrations.

In order to fully evaluate the ESDB system Orkand Corporation staff executed the following activities:

- interviewed all key personnel involved in development and maintenance of the ESDB system;
- studied all SAS data bases in the ESDB system using the contents and print procedures;

- investigated files containing SAS source code for operation of the system using the print-off utility on the AID computer; and

- conducted follow-up interviews with key personnel on the issues raised throughout the investigation of the system.

What follows is the written evaluation of the ESDB system. The evaluation is divided into four major sections. The first section consists of a short discussion of the historical background of the ESDB and its development; the second, is an in depth discussion of the status of the ESDB system at the present time; the third contains the data base, personnel, and resources issues raised by both IRM and CDIE staff. The fourth section contains a set of recommendations from The Orkand Corporation which IRM, in conjunction with CDIE can implement to improve the operation, organization and maintenance of the ESDB system.

II. BACKGROUND OF THE ESDB SYSTEM

PURPOSE OF THE ESDB SYSTEM

The ESDB is maintained to serve as a major source of data for missions wishing to develop new AID projects in a country or region. The ESDB is a multi-faceted, time series data base that provides effective input for the type of project, the focus of the project, method of implementing the project and potential measures of project effectiveness. Data has been collected on as many aspects of countries as possible (demographic, economic, financial, health/medical, agricultural). The data also reflect the dynamic and changing pattern of issues in various countries. For this reason the data are in a time series format, with data on a specific variable maintained for a given country over a span of years. At present the data base maintains data for financial, economic and demographic data for the period 1960 to the present, while agricultural data are maintained for the period 1977 to the present.

One of the essential factors for the ESDB is that the system be quickly and easily accessible, as well as up to date and as error free as possible. Because of this requirement several historical developments have been made to insure accessibility to an ever growing system. These will be discussed under system activities. Access to the system can be defined in several ways:

- production of standardized reports for mandated and ad hoc users;
- requests for special analyses using ESDB data; and
- provision of ESDB raw and SAS data to users in various machine readable formats and media (tapes, diskettes).

The continuing aim of ESDB is to be an accessible system for a wide variety of users.

HISTORY OF THE SYSTEM

AID first used computerized data for internal organizational needs (payroll, personnel and budget operations). By the start of the 1970's AID began development of computerized data bases to support Agency personnel in the allocation of project resources. PBAR, one such data base, contained many different types of data on AID projects and countries in which these projects were established. PBAR soon became too large to maintain with available systems. As a result, portions of PBAR were split off into several different, specialized data bases, one of which is the ESDB. ESDB's mission was to provide information on countries which were targeted for Agency projects.

In 1982, CDIE determined that ESDB should be more than the source of certain congressionally mandated reports and sought to increase the internal and external utilization and effectiveness of the ESDB system. At this time

CDIE staff began a large scale growth and reorganization process of ESDB to increase the data in the system. The ESDB system originally was an INQUIRE accessed data base. As the data base grew in size the system was becoming less and less responsive, with too much data to process for turnaround in a useful length of time (stories of several hours turnaround for a simple request were not uncommon). Because of this fact, the ESDB was recently converted from INQUIRE to SAS, and an indexing program was implemented shortening the time for access to the ESDB dramatically.

Development of the ESDB is presently under the direction of CDIE. In this capacity CDIE has required IRM assistance in developing the data base and programs to maintain and operate the system. Exhibit II-1 shows the relationship between the various personnel in the development process.

Exhibit II-1

AID-CONTRACTOR ROLES FOR DEVELOPMENT, OPERATIONS & MAINTENANCE OF ESDB

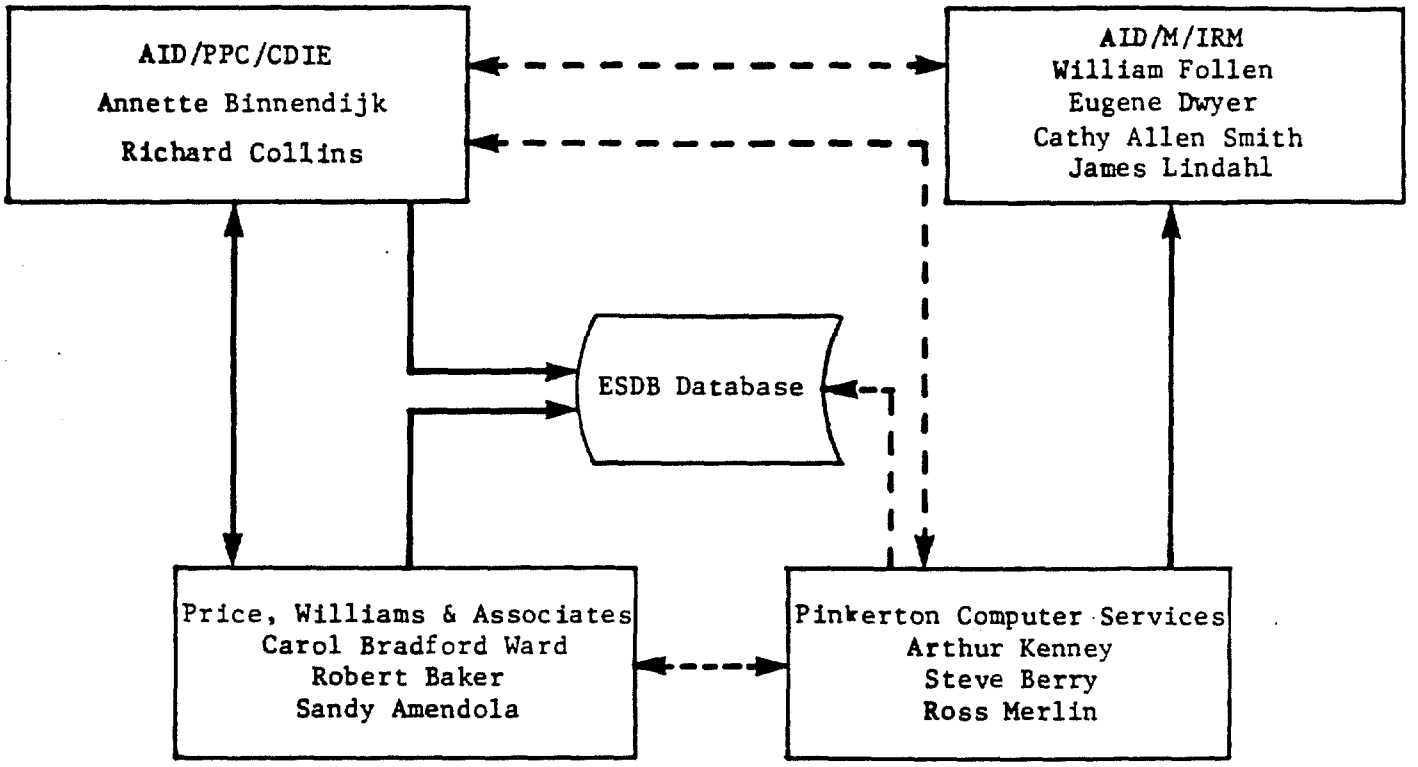

NAME	ORGANIZATION	RESPONSIBILITIES
Sandy Amendola	CDIE (PWA)	Analyst working for Richard Collins on ESDB, specializing in education issues on ESDB
Robert Baker	CDIE (PWA)	Analyst working for Richard Collins on ESDB, specializing in economic issues on ESDB
Annette Binnendijk	CDIE	Manager of EASA with overall responsibility for the ESDB system
Steve Berry	IRM (Pinkerton)	Programmer with responsibility to ESDB
Richard Collins	CDIE	Working for agency on an IPA with Georgetown University, reporting directly to Annette Binnendijk;person responsible for execution of development of ESDB
Eugene Dwyer	IRM	Head of the portion of IRM responsible for maintenance of existing agency data systems
William Follen	IRM	Head of the portion of IRM responsible for systems design and administration
Arthur Kenney	IRM (Pinkerton)	Site Manager for Pinkerton services contract; responsible for matching Pinkerton staff to requests for services coming to IRM
James Lindahl	IRM	IRM liaison to CDIE, responsible for managing ESDB automation
Ross Merlin	IRM (Pinkerton)	Programmer who was assigned for the conversion of ESDB from INQUIRE to SAS: programmer who has done most of SAS work on ESDB
Cathy Allen Smith	IRM	Agency manager for central service systems; responsible for overseeing liaison persons on IRM; James Lindahl reports directly to Mrs. Smith and she in turn reports directly to Mr. Follen
Carol Bradford Ward	CDIE (PWA)	Analyst working with Richard Collins on ESDB, specializing in demographic issues on ESDB

III. SYSTEM STATUS (10/84)

SYSTEM USERS

The ESDB has evolved into a major data base occupying 7530 tracks of on-line production disk space for SAS data. The system is needed to produce three mandated reports for Congress (the Congressional Profile, the Human Rights Report, and the 620S, a defense expenditure report), and is used for a number of other activities. Exhibit III-1 gives an overview of the uses of the ESDB. Exhibit III-2 describes the stage of development of each data disbursement of ESDB.

Congressionally Mandated Reports

Primary responsibility of the ESDB system is to support production of three congressionally mandated reports each year. First is the Congressional Profile, a report on each country in which AID has a mission. The report is comprehensive in the nature of material presented. An example is reproduced in Appendix A. The second report is the Human Rights report. This is a short (14 item) report on each country with an AID mission, an example of this report is reproduced in Appendix B. Finally, the 620S report, is a report by region of the world on the expenditure of countries for defense. At present this is an approximately 200 page, 11 table report to Congress. CDIE staff expect that the next 620S report will have a different format and have submitted mock-up tables of the report to Congress for approval.

CDIE staff plan to utilize ESDB to support preparation of Country Development Strategy Statements (CDSS). The ESDB portion of CDSS would contribute to an AID required document, but is not mandated by Congress.

Ad Hoc Reports

AID staff frequently require special reports on an ad hoc basis. These "short term" or "as needed" reports have previously used the services of statistical assistants (for routine requests) or the ESDB/CDIE staff (for more complicated requests). Within the last 30 days a group of menu driven SAS macro programs were tested to replace the old system of generating ad hoc reports. These reports can focus on various countries, variables and years of data for any information on the ESDB system.

DIU has an interest in merging ESDB data with textual data maintained on the HP3000 using MINISIS. This activity is a longer term, problematic issue with no apparent resolution at this time. Specifically, the issue is merging SAS data with text data in MINISIS format.

ESDB USERS AND PRODUCTS

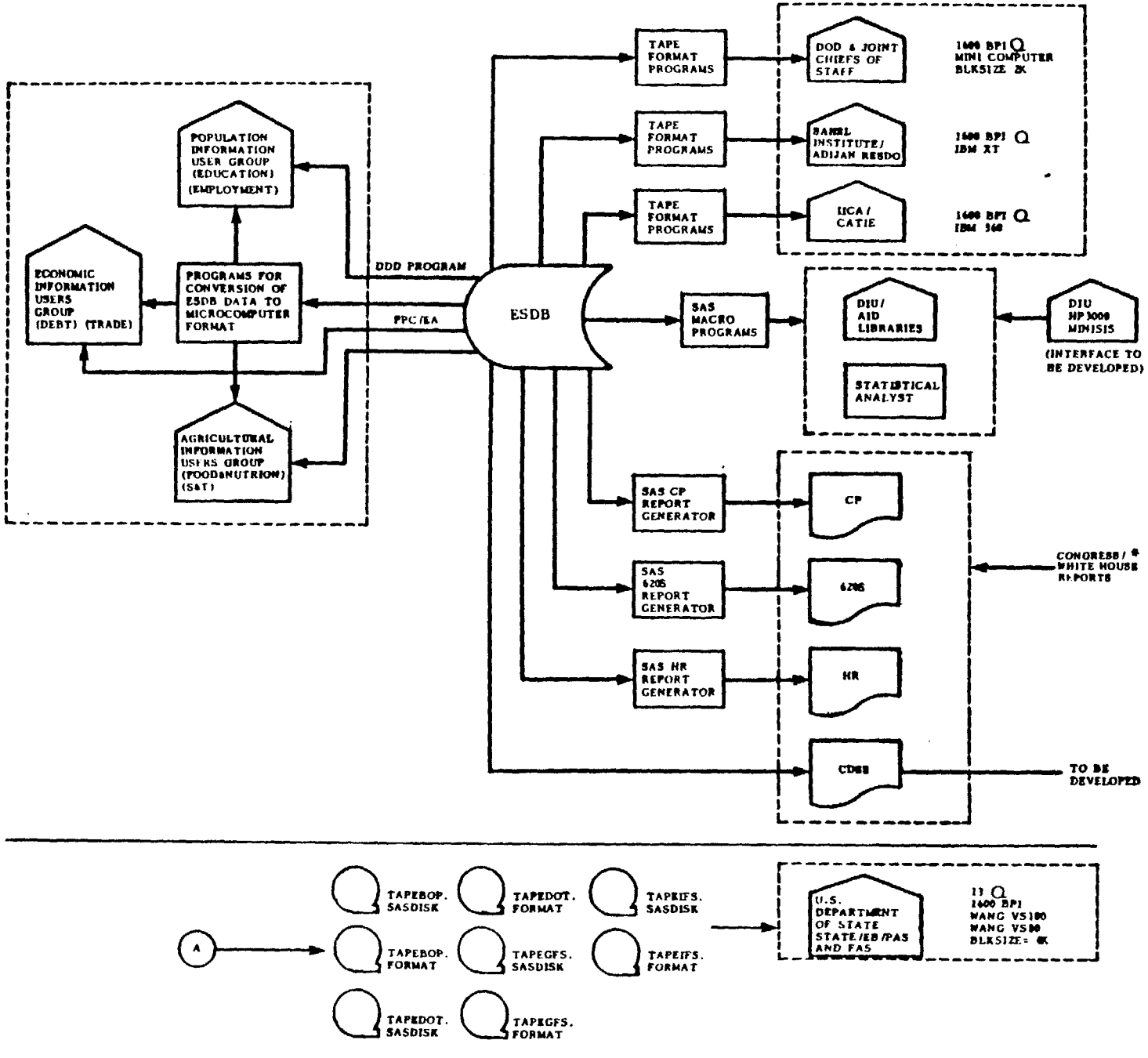

Exhibit III-2

ESDB SYSTEM DEVELOPMENT STATUS

Product	Program Developed	Program in "Production"*	Type of Output
Congressional Profile	yes	yes	Hardcopy Report
Human Rights Report	yes	yes	Hardcopy Report
620S Report	yes	no	Hardcopy Report
Portion of Country Development Strategy Statement	no	no	—
DoD & Joint Chiefs of Staff	yes	yes	Tape
SAHEL/ABIDJAN	yes	no	Tape
IICA/CATIE	yes	no	Tape
AD HOC Reports	yes	no	Hardcopy Reports/ Terminal
Population Information User Groups	no	no	Diskettes
Economic Information User Groups	no	no	Diskettes
Agricultral Information User Groups	no	no	Diskettes
State Department SERA Program	yes	yes	Tapes

*Not a true production environment, located on D520 system and individual users account on D520.

Tape and Diskette Users

Several users of the system receive computer tapes or micro diskettes of ESDB data from the data base. Users receiving this material at present are:

- DoD/Joint Chiefs of Staff
- SAHEL Institute/Abidjan Resdo (Africa)
- IICA/CATIE (Latin/South America)

See Exhibit III-1 for description of tapes or diskettes received for each user.

ESDB User Groups

CDIE has worked to develop in house user groups for the ESDB system. These groups are made up of Agency staff with common interests in a particular research area. Presently three such groups have been formed.

- Agriculture (primarily staff from FVA, S&T)
- Economic (primarily staff from PPC/EA)
- Population (primarily the Demographic Data for Development program)

Emphasis of these groups is in two areas: (1) development and implementation of programs to download data from ESDB to microcomputers and (2) instruction to users on how to access the ESDB and share and analyze information within an interest area.

SERA Program

One user of the ESDB system is the State Economic Reporting Analysis (SERA) within the State Department. ESDB data from the International Monetary Fund (IMF) are collected and formatted on SAS tapes for use in U.S. embassies in economic research.

CDIE Evaluations

CDIE staff are users of ESDB and process requests from missions and other Agency staff to more fully investigate certain issues. CDIE in this way becomes its own user, with a set of research priorities and goals, and utilization of the ESDB for their own research agendas.

SYSTEM OPERATIONS

In order to understand how the ESDB system operates there are two perspectives which need to be reviewed. Data income and disbursement of the ESDB system as well as the configuration of the data base and operating system of ESDB must be considered. Both of these perspectives will be analyzed. Because of the dynamic nature of ESDB development, the results of this investigation have already become slightly outdated. The following results depict a static picture of ESDB as of October 27, 1984. It is not possible to track every variable on the ESDB system from its origin (data tape from contributing

source) to any reports produced by ESDB. Some ESDB variables are used in numerous ESDB reports, while other variables are rarely used. There is no system or documentation which records frequency of variable use.

Production of Data from ESDB

The recent expansion in the size of the ESDB is based on CDIE's development of a number of formal and informal relationships with Federal and International agencies for the provision of data to the ESDB. Present and potential data sources are outlined in Exhibit III-3; the present status of each of these sources are described in Exhibit III-4. The process of data acquisitions occurs when CDIE receives a raw data tape from a cooperating agency and reviews the tape. The schedule of sources and times throughout the year the tape is received is shown in Appendix C. CDIE system staff review the tapes throughout the updating procedures. From this review, the submitting agency is frequently given feedback on specific data problems and overall comments on how to improve their tape data. The clean raw data are then converted into SAS formatted data and are used to update the existing ESDB.

The disbursement of data by ESDB was described above in the section on System Users, and graphically described in Exhibits III-1 and III-2. The media in which output can be produced and users of each type are as follows:

- Hard copy reports
  - mandated reports (CP,620S,HR)
  - ad hoc reports (from statistical assistants or SAS report generators)

- Computer tapes
  - SAS formatted tapes (IICA/CATIE, SERA)
  - Raw data tapes (DoD, SAHEL INSTITUTE)

- Floppy disks for microcomputers (formatted for Lotus 123)
  - users groups
  - ad hoc users

Data Base and Operating System Configuration

SAS data from the ESDB System are presently maintained on eight disks described in Exhibit III-5 and detailed in Appendix D. Short documentation on available data is presented in Appendix E.

- The major portions of the ESDB time series data are maintained in SASDB.HISTORY (economic and financial data), SASDB.USDA (agricultural data) and SASDB.POP (UN population data).

- SASDB.CP provides space for producing the Congressional Profile Report.

- SASDB.INFO provides indices, conversion factors, and some documentation of the rest of the system.

- SASDB.NATIONAL provides UN data on flow of funds to Lesser Developed Countries.

Exhibit III-3

ESDB DATA SOURCES

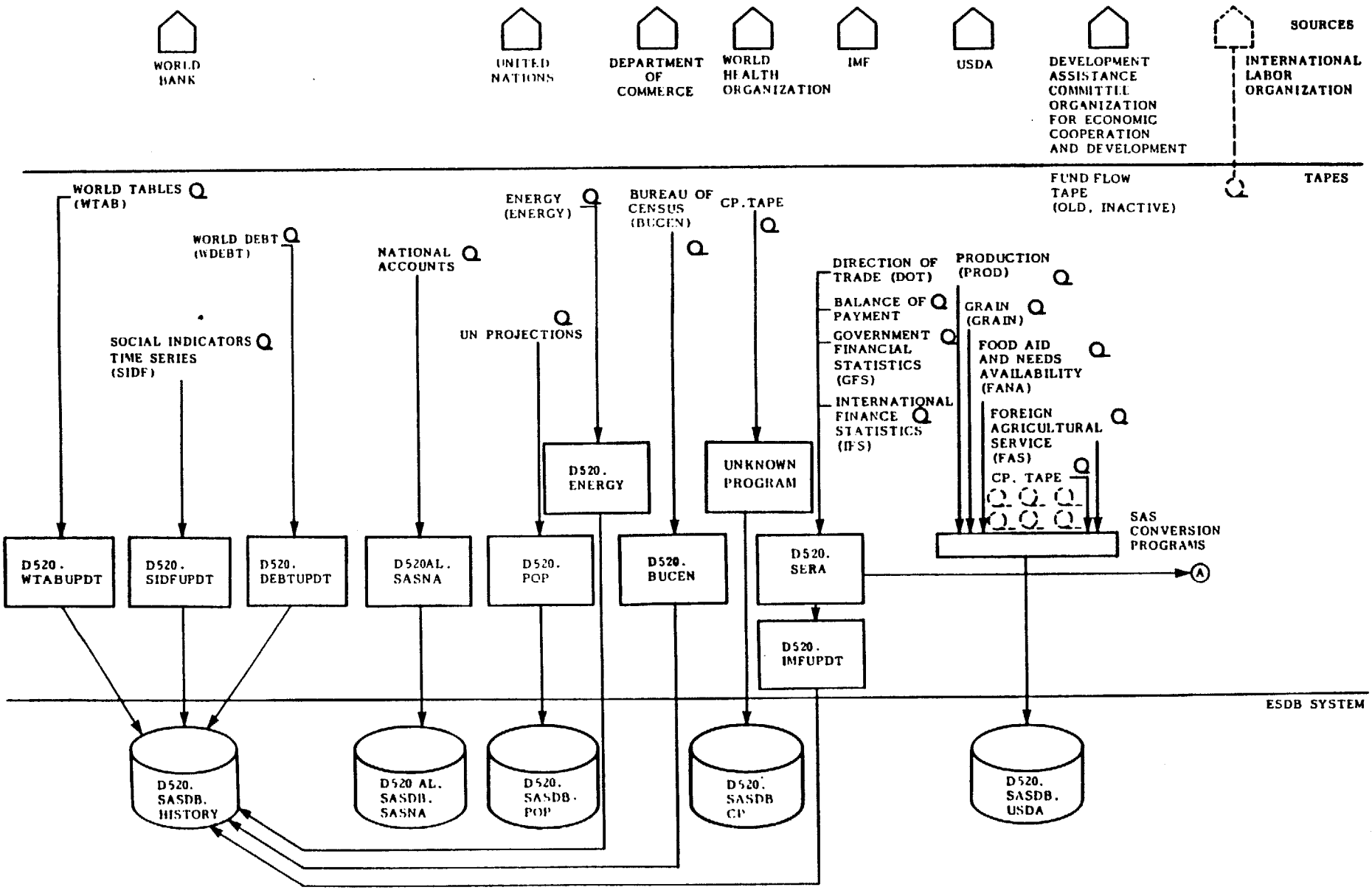

UN [illegible]
WHO databases
not in production
shouldn't it be
in column 2?

Exhibit III-4

STATUS OF ESDB DATA INPUTS

Source	Number of Tapes Received	Number of Updates Created	Number of Updates in "Production"*
World Bank	3	3	3
International Monetary Fund	4	4	4
United Nations	3	2	2
Department of Commerce	1	1	1
World Health Organization	1	1	1
International Labor Organization	0	0	0
Development Assistance Corporation/Office of Economic and Cultural Development	1	0	0
U.S. Department of Agriculture	4	0	0

*Not a true production environment, located on D520 system and individual users account on D520.

Exhibit III-5

ESDB SAS DATA SETS AND OPERATING SYSTEM

ESDB SAS DATA SETS — ALL TRACK ALLOCATIONS AS OF 10/23/84

D520.SASDB.
AIDBUDG

1 DATA SET
TRACKS: 1200 ALLOCATED
? USED

D520.SASDB.
BKUP

12 DATA SETS
TRACKS: 2000 ALLOCATED
1765 USED

D520.SASDB.CP

9 DATA SETS
TRACKS: 140 ALLOCATED
84 USED

D520.SASDB.
HISTORY

7 DATA SETS
TRACKS: 2640 ALLOCATED
1947 USED

D520.SASDB.
INFO

18 DATA SETS
TRACKS: 150 ALLOCATED
105 USED

D520AL.
SASDB.NACC

1 DATA SET
TRACKS: 550 ALLOCATED
? USED

D520.SASDB.
POP

3 DATA SETS
TRACKS: 200 ALLOCATED
175 USED

D520 SASDB.
USDA

7 DATA SETS
TRACKS: 1200 ALLOCATED
986 USED

ESDB OPERATING SYSTEM — ALL FILES PARTITIONED DATA SETS AS OF 10/20/84

D520.GENESIS.
SASPGM

D520.GENESIS.
CLIST

D520.GENESIS.
SASLIB

D520.NUCLEUS

D520.GENESIS.
FORMATS

D520SM.
MERLIN.
MACLIB

- SASDB.BKUP is an on-line backup of portions of the ESDB system.

- SASDB.AIDBUDG is a portion of a separate data base on Agency funding for projects. The data are on a project rather than country level and are not directly comparable with any other part of ESDB. Due to difficulties in properly using this data set, AIDBUDG is not presently utilized by CDIE staff.

The ESDB operating system presently resides on 5 partitioned data sets (PDS) in the production environment and several PDS' on the primary programmers catalogue for development purposes. The following is a list of the operating system programs. These programs are displayed in Appendix D and detailed in Appendix E.

- The updating procedures and some report generating procedures reside on D520.GENESIS.SASPGM (SAS source code) and D520.GENESIS.CLIST (CLISTS to run SAS source code or to produce updates through TSO alone).

- The operating system for the ESDB is called POPR, a specially written set of TSO commands and FORTRAN programs for generating reports, as well as program maintenance. POPR is located on D520.NUCLEUS.

- Formats required to read or write data for SAS are located on D520. GENESIS.SASLIB and in raw source forms in D520.GENESIS.FORMATS.

- Newly developed report generators using SAS macros and programs are presently located on D520SM.MERLIN.MACLIB. After the testing phase it is expected that these files will migrate to the D520 area.

IV. ESDB ISSUES

Throughout the evaluation process certain issues surfaced regarding present and future development objectives for ESDB system and CDIE and IRM staffing and agency resources necessary to meet these development objectives. These issues constitute the essential questions needing resolution in order to maintain the long term integrity of the ESDB system. The Agency has allocated major resources both in terms of personnel and dollars to develop the ESDB. For continued operation of the system these issues must be addressed. The major issue areas reviewed were:

- documentation,
- expansion of the size of the ESDB system,
- manpower resources for future ESDB development, and
- IRM and CDIE coordination and prioritization.

Given the fact that ESDB is supported by non-direct hire staff, The Orkand Corporation believes that steps need to be taken to document and manage ESDB in an environment subject to personnel switching. If these issues are not addressed by AID/Washington staff in the very near future, ESDB may very well become a data base system too complex to use with future managers, programmers, and operators.

DOCUMENTATION

While there are some informal user documents (see Appendix E) that have been produced by CDIE staff, as well as some programmer related documentation within the data base (SASDB.INFO:NOTES), formal written documentation of the ESDB system in FIPS or AID IPS format are non-existent. Documentation is needed to institutionalize the ESDB system so that present key persons in the system are not the only source of knowledge of how the system is maintained or operated. This fact is of major importance since ESDB is presently supported and operated entirely by non-direct hire staff.

MANPOWER RESOURCES

Present manpower for ESDB development is insufficient to complete all tasks identified by CDIE. Documentation, further program development, automation of maintenance procedures, and quality control procedures are not being accomplished in a timely manner due to insufficient staff. Presently the programming staff is fully utilized in finishing the first year conversion to SAS (writing update programs and SAS report generators). Documentation is not a primary effort in the development life cycle which will create difficulties for future users of ESDB.

IRM AND CDIE COORDINATION

Both CDIE and IRM want to clarify responsibilities related to the ESDB development and maintenance. CDIE and IRM have limited resources to dedicate to ESDB work. As such IRM and CDIE need to jointly establish future work priorities related to ESDB development and maintenance.

EXPANSION OF THE ESDB

The ESDB data base is increasing in size based on two factors, (1) inclusion of new variables from new data sources, and (2) addition of new years of time series data to already existing variables. The size of the data base utilizes a large volume of the Agency's existing computer space. Further, the lack of space is negatively affecting the usefulness of the data on the ESDB: a portion of data are being deleted from possible use, weakening or excluding some types of analysis.

V. RECOMMENDATIONS

The recommendations put forth below involve actions on the part of IRM and CDIE. Recommendations involve development and implementation of structured communication channels at an organizational level high enough such that competing priorities, resource allocation issues and organizational responsibilities may be resolved in an effective manner. The Orkand Corporation has defined a lack of authoritative project direction between CDIE and IRM. This direction should be established as soon as possible so that technical and administrative issues relating to future ESDB development and maintenance activities have a forum for resolution.

RECOMMENDATION: System Status/Documentation

Lead: IRM in collaboration with CDIE

- IRM and CDIE should review the number and nature of development tasks underway or planned for ESDB over the remainder of the fiscal year. Priorities should be set based upon established manpower and dollar criteria for the work.

- Because of the need to formally document the entire ESDB system and set priorities for continued ESDB systems development, certain portions of the current system development process should be frozen in order to have a static entity to document and in order to save resources for future development.

- Because of the nature of the data base, updating of presently existing variables should continue on a regular basis. This is the only way to insure effective time series data. Documentation of updating procedures will have to be made while updates are occurring. Therefore, configuration management principles and procedures need to be applied to the updating process.

- A freeze on further enhancements to programs generating mandated reports is required to document this major aspect of the system. Each mandated report generator (620S, HR, CP) should be frozen in CY 1985 in such a way that it does not effect the ability of CDIE and its staff to produce mandated reports on schedule.

- No new data elements should be added to the ESDB during the documentation period. A complete data dictionary should be a top priority of the documentation effort. After full data documentation is completed, new data elements may be added with configuration management principles in place.

- As the SAS report generator for ad hoc reports is tested, a hold on further enhancements is necessary to document the programs as well as to create user and training manuals for this portion of the system.

- Delay tape delivery to agencies requesting data, until the programs for this purpose are documented.

- The following baseline documents should be produced to permit new staff or new users to become familiar with, operate and maintain ESDB:

  - systems overview manual
  - systems user manual - Q&S
  - computer operations manual
  - program maintenance manual
  - data dictionary
  - report generating procedures manual
  - management overview manual

RECOMMENDATION: Implement Configuration Management

Lead: IRM in collaboration with CDIE

- A change/update process incorporating configuration management principles should be instituted by IRM. Through configuration management ESDB system integrity will be intact throughout continuing, yet parallel maintenance and enhancement environments. Configuration management will permit IRM and CDIE to promote decision-making accountability in relation to actual development priorities, budgets and manpower constraints. Configuration management will serve as the process by which future work in either maintenance and enhancement environments may be recorded and incorporated into baseline documentation.

  Partial decision to let procedures

- A configuration management process should be developed that includes the following major components:

  - baseline documentation

  - change/update request forms

  - process flow procedures for tracking changes/updates over time

  - clearly identified authorities for management and implementation of technical work

RECOMMENDATION: Define the User and Support Environment

Lead: CDIE in collaboration with IRM

- Over the past year development of ESDB has been spontaneous. Little, if any, evidence exists that the various development pathways ESDB is on will satisfy existing and future (unknown) users. Existing and

potential users of the system should be explicitly identified and a determination made as to whether their respective information needs can be met given the following criteria:

- existing system configuration
- development priorities
- budget and manpower constraints

- CDIE and IRM staff should develop a mail-in survey to be completed by both actual and potential users of the ESDB system. Areas of data collection should include, but are not limited to:

  - does the respondent actually use the ESDB system;

  - what is the frequency of use of the ESDB system and by whom (type of AID staff);

  - what types of data a user wishes to access and over what time periods; and

  - would potential users (external to AID) be willing to access ESDB through purchase of tapes.

It is expected that a number of respondents will be potential rather than actual users. A short (10 page) paper describing the ESDB system should be included with the survey.

Appendix A

CP Report

Example Page

Indicator Definitions

FY 85 CP ECONOMIC AND SOCIAL DATA

COUNTRY: (518) ECUADOR

BASIC DATA

TOTAL POPULATION.. (THOUSANDS,MID 1983) 8,811

PER CAPITA GNP..... (DOLLARS,1981) 1,180

ANNUAL PER CAPITA REAL GNP GROWTH RATE.. (1970-81) 4.6%

ANNUAL RATE OF INFLATION (1970-81) 14.1%

NATIONAL INCOME RECEIVED BY LOW 20% OF POPULATION..(.) . %

LIFE EXPECTANCY AT BIRTH, IN YEARS

(1982)	TOTAL 62.1	MALE 60.3	FEMALE 64.1
(1970)	TOTAL 55.9	MALE 54.1	FEMALE 57.7

ADULT LITERACY RATE (1974) TOTAL 74% MALE 78% FEMALE 70%

AGRICULTURE

ANNUAL PER CAPITA AGRICULTURAL PRODUCTION GROWTH RATE (1973-1982) 2.3%

AGRICULTURAL PRODUCTION AS % OF GDP.....(1981) 12%

POPULATION DENSITY / SQ MI OF AGRICULTURAL LAND (1979 389

MAJOR CROP(S)	ARABLE LAND	YEAR
SUBSISTENCE: POTATOES ,PLANTAINS ,CORN	30%	(1982)
CASH: BANANAS ,COCOA BEANS ,RICE	37%	(1982)

MAJOR AGRICULTURAL EXPORTS:(1982) BANANAS ,COFFEE ,COCOA BEANS

MAJOR AGRICULTURAL IMPORTS:(1982) WHEAT ,SOYBEAN OIL ,BANANAS

PROPORTION OF LABOR FORCE IN AGRICULTURE.....(1980) 52%

CENTRAL GOVERNMENT FINANCES

TOTAL REVENUES AND GRANTS ($ MILLIONS, U.S.)			
(1979)	923 (80)	1,502 (81)	1,420
TOTAL EXPENDITURES AND NET LENDING ($ MILLIONS, U.S.)			
(1979)	984 (80)	1,668 (81)	2,034
DEFICIT(-) OR SURPLUS ($ MILLIONS, U.S.)			
(1979)	-61 (80)	-166 (81)	-614

DEFENSE EXPENDITURES.

AS % OF TOTAL EXPENDITURES.. (1979) 18.9% (80) 12.5% (81) 13.1%

AS % OF GNP..... (1979) 2.0% (80) 1.9% (81) 2.1%

OFFICIAL INTERNATIONAL RESERVES, GROSS HOLDINGS END OF PERIOD.

($MILLIONS, U.S.) (1980) 1,030 (81) 650 (82) 428

EQUIVALENT TO 3.3 MONTHS OF IMPORTS (1981)

FOREIGN TRADE

MAJOR EXPORTS... (1981) PETROLEUM ,BANANAS ,COFFEE

EXPORTS TO U.S.

($ MILLIONS, US. FOB) (1980) 812 (1981) 984 (1982) 89

AS % OF TOTAL EXPORTS (1979) 35% (1980) 32% (1981) 39%

MAJOR IMPORTS....(1981) MACHINERY ,RAW MATERIALS ,CHEMICALS

IMPORTS FROM U.S.

($ MILLIONS, US. CIF) (1980) 862 (1981) 757 (1982) 904

AS % OF TOTAL IMPORTS (1979) 33% (1980) 38% (1981) 32%

TRADE BALANCE($ MILLIONS, U.S.)(1979) 54(80) 302(81) 183

TRADING PARTNERS: UNITED STATES ,JAPAN ,WEST GERMANY

EXTERNAL PUBLIC DEBT AS % OF GNP (1981) 33.8%

SERVICE PAYMENTS ON EXTERNAL PUBLIC DEBT,

($ MILLIONS, U.S.)..... (1981) 536

AS % OF EXPORT EARNINGS (DEBT SERVICE RATIO).... (1981) 21.1%

SOCIAL DATA

POPULATION GROWTH RATE...(1970) 3.1% (1978) 3.0% (1983) 3.1%

POPULATION IN URBAN AREAS.....(1970) 40% (1982) 46%

LIVE BIRTHS PER 1,000 POPULATION.....(1970) 43 (1983) 40

MARRIED WOMEN AGED 15-44 YRS. USING CONTRACEPTION. (1979) 20.0%

POPULATION (1980) IN AGE GROUP:

(0-14YRS) 44.5% (15-64YRS) 52 1% (65+ YRS) 3.5%

INFANT DEATHS IN FIRST YR OF LIFE PER 1000 LIVE BIRTHS (1983) 76

PEOPLE PER PHYSICIAN..... (1977) 1,570

MAJOR CAUSES OF

DISEASE (1980) INFLUENZA ,MALARIA ,TYPHOID FEVER

DEATH.. (1978) ENTERITIS ,ILL-DEFINED CAUS ,PNEUMONIA

PER CAPITA CALORIE SUPPLY AS A % OF REQUIREMENTS.. (1977) 90%

POPULATION WITH REASONABLE ACCESS TO SAFE WATER SUPPLY(1977) 42%

TOTAL SCHOOL ENROLLMENT AS % OF POPULATION IN AGE GROUP:

PRIMARY.....	(1979)	TOTAL	107%	MALE	109%	FEMALE 105%
SECONDARY.....	(1979)	TOTAL	49.0%	MALE	50.0%	FEMALE 48.0%
POST SECONDARY..	(1972)	TOTAL	8.4%	MALE	11.3%	FEMALE 5.4%

ENERGY PRODUCTION AS % OF CONSUMPTION.....(1981) 292%

INDICATOR DEFINITIONS

A brief explanation of each item on the economic and social data pages follows.

TOTAL POPULATION data are A.I.D. Office of Population mid-year estimates based on most recent censuses and interpretations of subsequent fertility and mortality trends prepared with the assistance of the Bureau of the Census. The total population figure (which may include A.I.D. adjustment of a census result), sometimes differs from population estimates used by other sources in some of the data elements shown (e.g., by the IBRD in computing per capita GNP).

PER CAPITA GNP figures are estimates reported by the IBRD, WORLD TABLES data. GNP is a measure of the total domestic and foreign output claimed by residents of a country. It is converted from current values of national currencies to U.S. dollars to make international comparisons. The conversion uses a three-year weighted average of prices and exchange rates intended to smooth out the impact of fluctuations in prices and exchange rates. Since the base period changes each year, data from previous years is not always comparable. (See World Bank, ATLAS for a complete technical description of this process.) Per capita GNP is obtained by dividing GNP at market prices in U.S. dollars by the IBRD's estimates of total mid-year population.

ANNUAL PER CAPITA REAL GNP GROWTH RATE are annual growth rates that have been computed by fitting trend lines to the logarithmic values of GNP per capita at constant market prices for each year of the time period. With this method, all available observations within the relevant time period are considered, and the growth rates obtained reflect general trends rather than cyclical factors or irregular variations in any particular year. Source of data is IBRD, WORLD TABLES.

ANNUAL RATE OF INFLATION is the annual growth rate that has been computed by fitting a trend line to the logarithmic values of the implicit GDP deflator from the IBRD, WORLD TABLES data. The "implicit GDP deflator" is defined as the ratio of the value of the GDP (gross domestic product) in current market prices to the value of GDP in constant market prices.

NATIONAL INCOME RECEIVED BY LOW 20% OF THE POPULATION is reported in IBRD SOCIAL INDICATORS data. The data refer to the percentage distribution of disposable household income (both cash and kind) received by the lowest 20% of households.

LIFE EXPECTANCY AT BIRTH IN YEARS is reported in the IBRD SOCIAL INDICATORS data. It is the estimated average number of years newborn children would expect to live if subject to the mortality risks prevailing for a cross section of the population (total, male, and female) at the time of their birth. The accuracy of the life table depends upon the accuracy and completeness of censuses and death registrations.

ADULT LITERACY RATE is taken from the IBRD SOCIAL INDICATORS data. It is an estimate of the percentage of the population aged 15 and over able to read and write. A person who can, with understanding, both read and write a short, simple statement about his or her everyday life is considered literate. Persons who can read but not write are included with illiterates. The data is compiled by the U.N. Educational, Scientific, and Cultural Organization (UNESCO). Because such data are normally gathered in large-scale demographic surveys and censuses, they often are not available for the most recent year.

ANNUAL PER CAPITA AGRICULTURAL PRODUCTION GROWTH RATE is computed from USDA data on total value of crop plus livestock production evaluated at constant prices. The growth rate is computed using trend line (least squares regression) analysis, making use of all annual observations.

AGRICULTURAL PRODUCTION AS % OF GDP is taken from the IBRD WORLD TABLES data. The agricultural sector is broadly defined as agriculture, forestry, hunting, and fishing. GDP is defined as the total final output of goods and services produced by an economy regardless of the allocation to domestic and foreign claims.

POPULATION DENSITY PER SQUARE MILE OF AGRICULTURAL LAND is taken from the IBRD SOCIAL INDICATORS data. It is defined as the IBRD estimated mid-year population per square kilomater (100 hectares) of agricultural land. Agricultural land consists of arable land, land under permanent crops (tree crops), and permanent pastures and meadows.

MAJOR CROPS, SUBSISTANCE AND CASH are from USDA data. Data were collected by individual agricultural officers at the American embassies in the various countries. Up to three subsistance and three cash crops are reported. Subsistance crops are used only by a given household while cash crops are grown for profit.

AGRICULTURAL IMPORTS AND EXPORTS are derived from USDA estimates. Data were collected by individual agricultural officers at the American embassies in the various countries. Up to three imports and exports are included.

PROPORTION OF THE LABOR FORCE IN AGRICULTURE comes from the IBRD SOCIAL INDICATORS data. It is the labor force in farming, fishing, forestry, and hunting as a percent of the total labor force.

TOTAL REVENUES PLUS GRANTS in millions of current U.S. dollars are derived from the IMF's GOVERNMENT FINANCE STATISTICS and are for the central government only. Figures in local currency are converted to U.S. dollars for each year using the average annual exchange rate (period average, par rate) from the IMF's INTERNATIONAL FINANCE STATISTICS. Revenue includes all nonrepayable receipts, requited and unrequited, other than those noncompulsory, nonrepayable, unrequited receipts which come from other

governments and international institutions. Grants are usually of two kinds: 1) those tied to a specific expenditure, program, or project which couldn't be done without a grant; and 2) those providing budget support for programs or expenditures that the recipient would undertake in any case. Grants are included with total revenue because they are transactions which reduce the deficit rather than financing it.

TOTAL EXPENDITURES & NET LENDING in millions of U.S. dollars are also calculated from the IMF's GOVERNMENT FINANCE STATISTICS and refer to central government only. Data in local currency are converted to U.S. dollars using the average annual exchange rate (period average, par rate) for each year found in IMF INTERNATIONAL FINANCE STATISTICS. Expenditure includes all nonrepayable payments by government, whether requited or unrequited, and whether for current or capital purposes. Net lending comprises government transactions in claims upon others undertaken for purposes of public policy rather than for management of government liquidity or earning a return. In determining a government's deficit, the IMF groups net lending with expenditure as determining the deficit.

DEFICIT OR SURPLUS in millions of U.S. dollars is derived from the IMF's GOVERNMENT FINANCE STATISTICS and is calculated by subtracting the expenditures and net lending from total revenue and grants. The data in local currency are then converted to U.S. dollars for each year by using the average annual exchange rate (period average, par rate) from the IMF INTERNATIONAL FINANCE STATISTICS. The data refer to central government only.

DEFENSE EXPENDITURES AS % OF TOTAL EXPENDITURES is from the IMF's GOVERNMENT FINANCE STATISTICS. It is the total defense expenditures divided by the total expenditures plus net lending. Defense expenditure is defined by the IMF as covering all expenditure, whether by defense or other departments, for the maintenance of military forces, including the purchase of military supplies and equipment, military construction, research, recruiting, training, equipping, moving, feeding, clothing and housing members of the armed forces, and providing remuneration, medical care, and other services for them. Military forces also include paramilitary organizations such as gendarmerie, constabulary, security forces, border and customs guards, and other trained, equipped, and available for use as military personnel. Also falling under this category are expenditure for purposes of strengthening the public services to meet wartime emergencies, training civil defense personnel, and acquiring materials and equipment for these purposes. Included also are expenditure for foreign military aid and contributions to international organizations and alliances.

DEFENSE EXPENDITURES AS % OF GNP is calculated using the defense expenditures from the IMF's GOVERNMENT FINANCE STATISTICS and GNP from the IBRD's WORLD TABLES data.

OFFICIAL INTERNATIONAL RESERVES, GROSS HOLDINGS AT END OF PERIOD in millions of U.S. dollars is taken from the IMF's INTERNATIONAL FINANCE STATISTICS. It is the total reserve of foreign currency in U.S. dollars plus the monetary gold holding at national evaluation. The variable "EQUIVALENT TO —— MONTHS OF IMPORTS" is calculated by dividing one year of imports (from the IMF's BALANCE OF PAYMENTS statistics) by 12 and dividing that by the total reserves.

MAJOR EXPORTS AND IMPORTS are taken from the C.I.A. WORLD FACTBOOK. Up to three exports and three imports are included.

EXPORTS AND IMPORTS TO THE U.S. in millions of U.S. dollars and as a percentage of total exports and imports are taken from the IMF's DIRECTION OF TRADE statistics. Exports are valued f.o.b. (free on board) and imports are valued c.i.f. (cost, insurance and freight), and include goods only. Reliability and timing differences in reporting make the coverage less than complete.

TRADE BALANCE in millions of U.S. dollars is from the IMF's BALANCE OF PAYMENTS data. It is the trading balance in merchandise (not including services).

MAIN TRADING PARTNERS is derived from IMF DIRECTION OF TRADE data on the value of imports plus exports (goods only) between the country in question and all of its trading partners. The three partners with the highest total for the latest ten years are listed.

EXTERNAL PUBLIC DEBT AS % OF GNP comes from the IBRD WORLD DEBT and WORLD TABLES data. External public debt is defined as the debt owed to non-residents and repayable in foreign currency, goods or services that has an original or extended maturity of over one year.

SERVICE PAYMENTS ON EXTERNAL PUBLIC DEBT in millions of U.S. dollars is also from the IBRD WORLD DEBT data. Service payments are actual repayments of principal (amortization) and interest payments made in foreign currencies, goods, or services in the year specified.

SERVICE PAYMENTS ON EXTERNAL PUBLIC DEBT AS % OF EXPORT EARNINGS (DEBT SERVICE RATIO) is from the IBRD WORLD DEBT data and the IMF BALANCE OF PAYMENTS data. It is total debt service payments as a percentage of total exports of goods and services.

POPULATION GROWTH RATE is the average annual growth rate from midyear of the previous year, computed using the exponential formula. These figures are from the Office of Population of A.I.D. and gathered by the Bureau of the Census.

POPULATION IN URBAN AREAS (%) is taken from the IBRD SOCIAL INDICATORS data. This is the ratio of the urban population to the total population. The wide

variation in the definition of the concept of "urban" used by individual countries limits the international comparability of the data.

LIVE BIRTHS PER 1000 POPULATION (or the Crude Birth Rate) are from the A.I.D. Office of Population, gathered by the Bureau of the Census. It is defined as the number of live births per 1000 midyear population. Most of the data come from civil registers, supplemented by census data or sample surveys.

MARRIED WOMEN AGED 15-44 YEARS OF AGE USING CONTRACEPTION is the percent of married women of reproductive age who are currently using contraception. This data is also from the Office of Population of A.I.D. with the Bureau of the Census.

POPULATION IN A GIVEN AGE GROUP is taken from the IBRD SOCIAL INDICATORS data. This information indicates the proportion of the population in a given age group and is helpful in analyzing the age structure of a population and in calculating dependency ratios.

INFANT DEATHS IN FIRST YEAR OF LIFE PER 1000 LIVE BIRTHS (or the Infant Mortality Rate) is from the A.I.D. Office of Population and the Bureau of the Census. The rate refers to the number of babies who die in their first year of life per thousand live births in that same year.

NUMBER OF PERSONS PER PHYSICIAN is taken from the IBRD SOCIAL INDICATORS data and refers to the population divided by the number of practicing physicians qualified from a medical school at university level.

MAJOR CAUSES OF DISEASE AND DEATH are taken from data collected by the WORLD HEALTH ORGANIZATION according to the International Classification of Diseases. Major causes of disease are derived from the number of cases of notifiable disease. Causes of death are based on data drawn from civil registration systems.

PER CAPITA CALORIE SUPPLY AS A % OF REQUIREMENTS is from the IBRD SOCIAL INDICATORS data and is computed from the energy equivalent of net food supplies available in the country per capita per day. Available supplies comprise domestic production, imports minus exports, and changes in stock. Net supplies exclude animal feed, seeds, quantities used in processing, and losses in distribution. Requirements were estimated by FAO based on physiological needs for normal activity and health considering environmental temperature, body weight, age and sex distribution of the population, and allowing 10 percent for waste at the household level.

POPULATION WITH REASONABLE ACCESS TO SAFE WATER SUPPLY (%) is taken from the IBRD SOCIAL INDICATORS data. It is the percentage of the population with reasonable access to safe water supply (includes treated surface waters or untreated but uncontaminated water such as that from protected boreholes,

springs, and sanitary wells). In an urban area a public fountain or standpost located not more than 200 meters from a house may be considered as being within reasonable access of that house. In rural areas reasonable access would imply that the housewife or members of the household do not have to spend a disproportionate part of the day fetching the family's water.

TOTAL SCHOOL ENROLLMENT AS % OF POPULATION IN AGE GROUP is taken from the IBRD SOCIAL INDICTORS data. It is the enrollment of all ages at a given level as percentages of respective level school-age populations; normally including children aged 6-11 as primary; 12-17 as secondary; and 18-23 as post secondary. For countries with universal education, enrollment may exceed 100 percent since some pupils are below or above the official school age. The data is compiled by UNESCO.

ENERGY PRODUCTION AS A % OF CONSUMPTION comes from the United Nations YEARBOOK OF WORLD ENERGY STATISTICS. Consumption of energy is defined as the domestic consumption of commercially produced energy derived from coal, lignite, peat, crude petroleum, natural gas, water power, and nuclear sources. Production refers to domestic output during the year in question. Energy is expressed in terms of hard coal equivalent. The conversion formula is based on caloric values — the amount of coal required to produce the same amount of heat as produced directly by a specified amount of another source of energy. The ratio of production to consumption will exceed 100% in those countries which are net exporters of energy (e.g., OPEC countries). Countries with values of less than 100% may be exporters of energy; however, on balance, they import more than they export.

Appendix B

Human Rights Report

Example Pages

1984 COUNTRY HUMAN RIGHTS REPORTS:
SOCIAL AND ECONOMIC INDICATORS FOR SECTOR FOUR

---------- CNTRY=000 COUNTRY=UNITED STATES ----------

INDICATOR	MOST RECENT VALUE	YEAR
A. POPULATION SIZE (THOUSANDS)	236690	1984
B. POPULATION GROWTH RATE (%)	1	1984
C. GNP PER CAPITA ($US CURRENT)	13163	1982
D. LIFE EXPECTANCY AT BIRTH (YRS)	.	.
E. INFANT MORTALITY RATE	10	1984
F. ADULT ILLITERACY RATE: TOTAL	1	1979
ADULT ILLITERACY RATE: MALE	.	.
ADULT ILLITERACY RATE: FEMALE	.	.
ADULT ILLITERACY RATE: URBAN	.	.
ADULT ILLITERACY RATE: RURAL	.	.
G. PERCENT OF POPULATION WITH ACCESS TO SAFE WATER: TOTAL	99	1977
PERCENT OF POPULATION WITH ACCESS TO SAFE WATER: URBAN	100	1977
PERCENT OF POPULATION WITH ACCESS TO SAFE WATER: RURAL	98	1977
H. PRIMARY SCHOOL ENROLLMENT RATIOS: TOTAL	133	1980
PRIMARY SCHOOL ENROLLMENT RATIOS: MALE	135	1980
PRIMARY SCHOOL ENROLLMENT RATIOS: FEMALE	132	1980
I. CALORIE SUPPLY AS PERCENT OF REQUIREMENTS: TOTAL	136	1977
J. PERCENT OF POPULATION BELOW ABSOLUTE POVERTY LEVEL: TOTAL	.	.
PERCENT OF POPULATION BELOW ABSOLUTE POVERTY LEVEL: URBAN	.	.
PERCENT OF POPULATION BELOW ABSOLUTE POVERTY LEVEL: RURAL	.	.

1984 COUNTRY HUMAN RIGHTS REPORTS:
SOCIAL AND ECONOMIC INDICATORS FOR SECTOR FOUR

CNTRY=141 COUNTRY=GREENLAND

INDICATOR	MOST RECENT VALUE	YEAR
A. POPULATION SIZE (THOUSANDS)	53.0	1984
B. POPULATION GROWTH RATE (%)	1.2	1984
C. GNP PER CAPITA ($US CURRENT)	11314.2	1982
D. LIFE EXPECTANCY AT BIRTH (YRS)	.	.
E. INFANT MORTALITY RATE	35.0	1984
F. ADULT ILLITERACY RATE: TOTAL	.	.
ADULT ILLITERACY RATE: MALE	.	.
ADULT ILLITERACY RATE: FEMALE	.	.
ADULT ILLITERACY RATE: URBAN	.	.
ADULT ILLITERACY RATE: RURAL	.	.
G. PERCENT OF POPULATION WITH ACCESS TO SAFE WATER: TOTAL	.	.
PERCENT OF POPULATION WITH ACCESS TO SAFE WATER: URBAN	.	.
PERCENT OF POPULATION WITH ACCESS TO SAFE WATER: RURAL	.	.
H. PRIMARY SCHOOL ENROLLMENT RATIOS: TOTAL	.	.
PRIMARY SCHOOL ENROLLMENT RATIOS: MALE	.	.
PRIMARY SCHOOL ENROLLMENT RATIOS: FEMALE	.	.
I. CALORIE SUPPLY AS PERCENT OF REQUIREMENTS: TOTAL	.	.
J. PERCENT OF POPULATION BELOW ABSOLUTE POVERTY LEVEL: TOTAL	.	.
PERCENT OF POPULATION BELOW ABSOLUTE POVERTY LEVEL: URBAN	.	.
PERCENT OF POPULATION BELOW ABSOLUTE POVERTY LEVEL: RURAL	.	.

1984 COUNTRY HUMAN RIGHTS REPORTS:
SOCIAL AND ECONOMIC INDICATORS FOR SECTOR FOUR

CNTRY=638 COUNTRY=ALGERIA

INDICATOR	MOST RECENT VALUE	YEAR
A. POPULATION SIZE (THOUSANDS)	21351.0	1984
B. POPULATION GROWTH RATE (%)	3.1	1984
C. GNP PER CAPITA ($US CURRENT)	2350.7	1982
D. LIFE EXPECTANCY AT BIRTH (YRS)	57.6	1984
E. INFANT MORTALITY RATE	105.9	1984
F. ADULT ILLITERACY RATE: TOTAL	73.6	1971
ADULT ILLITERACY RATE: MALE	58.2	1971
ADULT ILLITERACY RATE: FEMALE	87.4	1971
ADULT ILLITERACY RATE: URBAN	58.8	1971
ADULT ILLITERACY RATE: RURAL	81.1	1971
G. PERCENT OF POPULATION WITH ACCESS TO SAFE WATER: TOTAL	77.0	1976
PERCENT OF POPULATION WITH ACCESS TO SAFE WATER: URBAN	100.0	1976
PERCENT OF POPULATION WITH ACCESS TO SAFE WATER: RURAL	60.0	1976
H. PRIMARY SCHOOL ENROLLMENT RATIOS: TOTAL	93.5	1981
PRIMARY SCHOOL ENROLLMENT RATIOS: MALE	106.5	1981
PRIMARY SCHOOL ENROLLMENT RATIOS: FEMALE	80.1	1981
I. CALORIE SUPPLY AS PERCENT OF REQUIREMENTS: TOTAL	98.8	1977
J. PERCENT OF POPULATION BELOW ABSOLUTE POVERTY LEVEL: TOTAL	.	.
PERCENT OF POPULATION BELOW ABSOLUTE POVERTY LEVEL: URBAN	20.0	1977
PERCENT OF POPULATION BELOW ABSOLUTE POVERTY LEVEL: RURAL	.	.

Appendix C

ESDB Data Tape Input Schedule

Source	Database	#of updates	Approximate Dates	EASA	Source Contact Pers
IBRD	World Tables	2	Feb/Sept	CBW	Boris Blazik 676-1903 Reza Farivari 676-0052
IBRD	World Debt	1	Feb	CBW	Hugh Dowsett 676-0032 (Roy Pomeroy) 377-5996
IBRD	Social Indicators FSID/SIDF	1	Aug	CBW	Michael Hee 676-1905 Maja Bresslauer 676-1815 letter of reque Mr. Sang Eun Le 1818 H St N.W. Wash D.C. 2043
IMF	International Finance Statistics	4	Jan/Apr/Jul/Oct	RC	Mike Gray 473-7555
IMF	Government Finance Statistics	4	"	RC	
IMF	Balance of Payments	4	"	RC	
IMF	Trading Partners	4	"	RC	
USDA	Production	2	Jan/July	CBW	Ed Overton 382-9831
USDA	Grain	2	Jan/July	CBW	Ed Overton 382-9831
USDA	Food Aid Needs And Availabilities	2	Jan/July	CBW	Ed Overton 382-9831
USDA	Foreign Agriculture Service Production	2	Jan/July	CBW	Ed Overton 382-9831

USDA	Agricultural Statistics (for the CP)	1	June/July	CBW	Boyd Chugg 447-8056
UN	World Energy Statistics	1	?	CBW	William Clive 212-754-4579
UN	National Accounts Statistics	1	?	RB	Yoshimasa Kovabayashi 212-754-4175 C. Hannig 212-754-4175
UN	Population Projections	every 2 years	last update June 84	CBW	Joe Chamie 212-754-3219
BUCEN	Population Statistics (for the CP)	1	August	CBW	Peter Johnson 673-4086
WHO	Health Statistics	1	September	CBW	B. Heller Telex: 27821 OM 1211 Geneva 27 Switzerland

Appendix D

Proc Contents of ESDB SAS Files in Production Environment

(Except SASDB.USDA)

CONTENTS PROCEDURE

PHYSICAL CHARACTERISTICS OF DS DATA SET

DSNAME=D.22.SASDM.AIDH006 UNIT=SYSDA VOL=SER=AIDV14 DISP=SHR DEVICE=3350 DISK MAX BLKSIZE=19069 BYTES

CREATED TUESDAY, JULY 24, 1984 1200 TRACKS ALLOCATED IN 1 EXTENT

SAS DATA SET DIRECTORY

NAME	# OBS	TRACKS	SUBEXTENTS

TOTAL TRACKS USED: 1
HIGH TRACK USED: 1

CONTENTS PROCEDURE

PHYSICAL CHARACTERISTICS OF OS DATA SET

DSNAME=D52C.SASUB.BKUP UNIT=SYSDA VOL=SER=AIDV16 DISP=SHR DEVICE=3350 DISK MAX BLKSIZE=19069 BYTES

CREATED FRIDAY, AUGUST 12, 1983 2000 TRACKS ALLOCATED IN 1 EXTENT

SAS DATA SET DIRECTORY

NAME	# OBS	TRACKS	SUBEXTENTS
NRG	0	1	1
NRG_DE	0	1	1
NRG_CF	0	1	1
NRG_CFE	0	1	1
ALPHA	146210	1663	3
XCNTRY	195	2	1
DENUMS	1589	15	2
CPUSDA	76	2	1
CPENERGY	152	2	1
CPAGGR	330	2	1
CPMAJRXM	78	2	1
CPFINAL	693	60	2

TOTAL TRACKS USED: 1753
HIGH TRACK USED: 1765

CONTENTS PROCEDURE

PHYSICAL CHARACTERISTICS OF DS DATA SET

DSNAME=[illegible] UNIT=SYSDA VOL=SER=AIDV14 DISP=SHR DEVICE=3350 DISK MAX BLKSIZE=19069 BYTES

CREATED WEDNESDAY, OCTOBER 3, 1984 140 TRACKS ALLOCATED IN 11 EXTENTS

SAS DATA SET DIRECTORY

NAME	# OBS	TRACKS	SUBEXTENTS
WHO	166	2	1
ENERGY	152	1	1
AGGR	330	1	1
MAJRXM	78	3	1
USDA	76	2	2
GPFINAL	693	60	1
MISSEV	112	2	2
AIDREV	608	3	1
ALLREVS	608	9	1

TOTAL TRACKS USED: 84
HIGH TRACK USED: 120

28

CONTENTS PROCEDURE

PHYSICAL CHARACTERISTICS OF DS DATA SET

DSNAME=D220.SASDS.HISTORY UNIT=SYSDA VOL=SER=AIDV14 DISP=SHR DEVICE=3350 DISK MAX BLKSIZE=19069 BYTES

CREATED WEDNESDAY, SEPTEMBER 26, 1984 2040 TRACKS ALLOCATED IN 14 EXTENTS

SAS DATA SET DIRECTORY

NAME	* OBS	TRACKS	SUBEXTENTS
ALPHA	14,050	1616	1
CPLIT	2700	61	1
NRG	10126	162	1
NRG_DE	10126	31	1
NRG_CFH	167	2	2
NRG_CF	167	4	2
CPNUM	5960	70	2

TOTAL TRACKS USED: 1947
HIGH TRACK USED: 2074

CONTENTS PROCEDURE

PHYSICAL CHARACTERISTICS OF OS DATA SET

DSNAME=DSRC.SASDS.INFO UNIT=SYSDA VOL-SER=AIDV03 DISP=SHR DEVICE=3350 DISK MAX BLKSIZE=19069 BYTES

CREATED TUESDAY, JANUARY 10, 1984 150 TRACKS ALLOCATED IN 1 EXTENT

SAS DATA SET DIRECTORY

NAME	# OBS	TRACKS	SUBEXTENTS
CTRYCODE	330	3	1
NOTES	31	1	1
DENOMS	1520	15	3
UNIT	28	1	1
CONVERT	28	2	2
DODDENUM	167	2	1
NRGCODES	111	1	1
IMFCODES	18123	52	3
BUREAU	15	1	1
APPROP	37	1	1
DECNAME	144	1	1
PROGRAM	29	1	1
PRJTITLE	5077	15	1
SUPLAT	701	3	1
COMMNAME	142	1	1
XCNTRY	195	2	2
DISEASE	71	1	1
USDACOMM	183	1	1

TOTAL TRACKS USED: 105
HIGH TRACK USED: 105

50

CONTENTS PROCEDURE

PHYSICAL CHARACTERISTICS OF OS DATA SET

DSNAME=[illegible]20.SASUB.POP UNIT=SYSDA VOL=SER=AIDV12 DISP=SHR DEVICE=3350 DISK MAX BLKSIZE=19069 BYTES

CREATED THURSDAY, AUGUST 23, 1984 200 TRACKS ALLOCATED IN 1 EXTENT

SAS DATA SET DIRECTORY

NAME	# OBS	TRACKS	SUBEXTENTS
SINGLEYR	3820	45	1
AGEGROUP	6112	58	1
INDICATR	8595	73	1

TOTAL TRACKS USED: 175
HIGH TRACK USED: 175

CONTENTS PROCEDURE

PHYSICAL CHARACTERISTICS OF US DATA SET

DSNAME=0520.SASDB.USDA UNIT=SYSDA VOL=SER=A10V15 DISP=SHR DEVICE=3350 DISK MAX BLKSIZE=19069 BYTES

CREATED MONDAY, JULY 2, 1984 1200 TRACKS ALLOCATED IN 1 EXTENT

SAS DATA SET DIRECTORY

NAME	# OBS	TRACKS	SUPEXTENTS
FANA	63048	75	1
GRAIN	18561	104	1
OSFNOTES	37	1	1
GRAINVAL	3030	61	2
OSF	31174	177	1
PROD	127836	496	1
PRODVAL	4204	71	1

TOTAL TRACKS USED: 986
HIGH TRACK USED: 986

42

Appendix E

CDIE Written Documentation For ESDB

USDA DATABASES
MAINTAINED ON THE AID MAINFRAME COMPUTER
AND AVAILABLE FROM PPC/CDIE/EASA

DESCRIPTION	DATABASE NAME
1) Food Aid Needs and Availabilities	FANA
2) USDA Production	PROD or PRODVAL
3) USDA Grain only	GRAIN or GRAINVAL
4) Foreign Agriculture Service (FAS)	OSF

The databases listed above are described in detail below. For each database there is 1) a 1-2 paragraph description; 2) a list of the first 10 records of the database in tabular format; 3) a list of the contents of the database; 4) a list of the countries for which data is available; and 5) a list of the commodities (e.g. wheat) for which data is available.

FOOD AID NEEDS AND AVAILABILITIES (FANA)

The USDA (Economic Research Service) Food Availabilities and Needs Assessment database provides supply and utilization data on sixty commodities and financial data for 67 countries. The data is annual and includes historical trends and projections for 1977 to 1984. Variables include food production, imports, exports, feed use, total use, domestic supply, food import requirements, financial indicators such as debt and reserves, commercial import capacity and food aid needs. The database is updated semi-annually and is available in published form annually in the USDA's World Food Aid Needs and Availabilities.

Nonfeed Use = Production + Beginning stocks + Imports - (Exports + Feed Use + Ending Stocks)
Total Use = Nonfeed Use + Feed Use
Total Needs = Total Use + Ending Stocks
Domestic Supply + Production + Beginning Stocks - Ending Stocks

All numeric codes fall between years 1977 and 1984. The 77 refers to calendar 1977 for data representing international balance-of-payments transactions. The same number, for commodity purposes, means the 1977/78 marketing year. The code "AV" is the base period average of either calendar years 1979-82 or marketing years 1979/80-1982/83.

CONTENTS OF SAS DATA SET USDA.FANA
TRACKS USED=75 SUBEXTENTS=1 OBSERVATIONS=63048 CREATED BY TSO USERID D520LG ON CPUID 04-0158-020056
AT 10:31 TUESDAY, APRIL 24, 1984 BY SAS RELEASE 82.3 DSNAME=D520.SASDB.USDA BLKSIZE=6230 LRECL=22
OBSERVATIONS PER TRACK=849 GENERATED BY PROC SORT
ALPHABETIC LIST OF VARIABLES

#	VARIABLE	TYPE	LENGTH	POSITION	FORMAT	INFORMAT	LABEL
5	CNTRY	CHAR	3	19	GEONAME40.		AID COUNTRY CODE - 3 DIGIT
1	COMMCODE	CHAR	2	4	FANACOM		COMMODITY CODE
2	DESCCODE	CHAR	3	6	FANADE		DESCRIPTION OF VALUE
4	VALUE	NUM	8	11			QUANTITY OR VALUE (SEE DESCCODE)
3	YEAR	CHAR	2	9			77=77 BOP TRANSACTION/77=77/78 COMMODITY

FIRST TEN RECORDS OF THE FANA DATABASE

OBS	COMMCODE	DESCCODE	YEAR	VALUE	CNTRY
1	BARLEY	PRODUCTION IN METRIC TONS	AV	113500	EGYPT, ARAB REPUBLIC OF
2	BARLEY	BEGINNING STOCKS IN METRIC TONS	AV	20000	EGYPT, ARAB REPUBLIC OF
3	BARLEY	IMPORTS, HISTORIC ONLY MET TONS	AV	0	EGYPT, ARAB REPUBLIC OF
4	BARLEY	EXPORTS, HISTORIC ONLY MET TONS	AV	0	EGYPT, ARAB REPUBLIC OF
5	BARLEY	NONFEED USE IN METRIC TONS	AV	33750	EGYPT, ARAB REPUBLIC OF
6	BARLEY	POPULATION	AV	42854000	EGYPT, ARAB REPUBLIC OF
7	BARLEY	PERCAPITA NONFEED USE IN GRAMS	AV	784	EGYPT, ARAB REPUBLIC OF
8	BARLEY	ENDING STOCKS IN METRIC TONS	AV	20000	EGYPT, ARAB REPUBLIC OF
9	BARLEY	FEED USE IN METRIC TONS	AV	79750	EGYPT, ARAB REPUBLIC OF
10	BARLEY	TOTAL NEEDS IN METRIC TONS	AV	133500	EGYPT, ARAB REPUBLIC OF

FANA COUNTRY

CNTRY	FREQUENCY
EGYPT, ARAB REPU	1052
LEBANON	858
AFGHANISTAN	656
NEPAL	656
SRI LANKA	878
INDIA	1674
BANGLADESH	684
PAKISTAN	1092
LAOS	268
VIETNAM	656
KAMPUCHEA(CAMBOD	656
PHILIPPINES	1266
INDONESIA	1460
BOLIVIA	1052
COLOMBIA	1266
COSTA RICA	664
DOMINICAN REPUBL	1674
ECUADOR	1460
EL SALVADOR	1072
GUATEMALA	684
HAITI	1460
HONDURAS	684
NICARAGUA	878
PERU	1246
JAMAICA	858
COMOROS	656
DJIBOUTI	633
MOROCCO	664
ZAMBIA	664
MALAWI	461
KENYA	1634
UGANDA	1646
TANZANIA, UNITED	1246
CAMEROON	1626
LESOTHO	656
GAMBIA	1044
SIERRA LEONE	656
GHANA	1626
MAURITIUS	462
SWAZILAND	676
SOMALIA	1072
SUDAN	1266
EQUATORIAL GUINE	633
ANGOLA	850
CAPE VERDE	870
MOZAMBIQUE	1238
GUINEA BISSAU	858
ZAIRE	858
ETHIOPIA	1246
TUNISIA	664
LIBERIA	664
GUINEA	858

FANA COUNTRY, cont

CNTRY	FREQUENCY
CENTRAL AFRICAN	1044
CHAD	1044
CONGO, PEOPLES R	656
BENIN	1387
MAURITANIA	1052
NIGER	656
SENEGAL	858
UPPER VOLTA	850
MADAGASCAR	656
MALI	850
TOGO	1238
BURUNDI	1238
RWANDA	1238

FANA COMMODITY CODE

COMMCODE	FREQUENCY
COCONUT OIL	388
BARLEY	1164
BANANAS	388
BANANAS AND PLANTAIN	194
CORN	10858
DRIED BEANS	1358
FN	3510
GARBANZOS, CHICKPEAS	194
GRAIN EQUIV, AID CAL	1556
PULSES	582
PALM OIL	194
PALM KERNEL OIL	194
CASSAVA	5427
MILLET	3447
MILK, AID CALCULATN	100
MILK, NONFAT DRY	970
MILLET AND SORGH	582
OTHER GRAINS	194
VEGETABLE OILS, AID C	140
VEGETABLE OILS	776
PEANUT OIL	194
PEANUTS	388
PULSES, AID CALCUL	200
POTATOES	1164
PLANTAINS	1358
RICE	10078
TOTAL ROOTS	194
SORGHUM	3492
SWEET POTATOES	1159
TEFF	194
WHEAT AND WHEAT	194

FANA COMMODITY CODE, cont.

COMMCODE	FREQUENCY
WHEAT	11053
YAMS	388
COCOYAMS	194
YAMS AND SWEET POT	388
YAMS AND POTATOE	194

FANA DESCRIPTION CODE

DESCCODE	FREQUENCY
BEGINNING STOCKS IN METRIC TONS	2672
COMMERCIAL IMPORT CAPACITY	348
ENDING STOCKS IN METRIC TONS	2673
DEBT SERVICE $US1Q00	584
OTHER DEBITS $US1000	585
POPULATION IN THOUSANDS	2673
FOOD SECURITY END STOCK INCR QUANTITY	68
FOOD SECURITY END STOCK INCR $US1000	68
FOOD SECURITY END STOCK QUANTITY MT	136
OTH GOODS & SERVICES CREDIT $US1000	585
GRAIN EQUIV NONFEED USE METRIC TONS	2664
STATQUO GRAIN EQUIVALENT IMPORT REQ	2664
GRAIN EQUIV ENDING STOCKS MET TONS	2664
GRAIN EQUIV PRODODUCTION MET TONS	2664
MERCHANDISE EXPORTS $US1000	585
MERCHANDISE IMPORTS $US1000	585
AID NEEDS NUTRITION BASED $US1000	340
NUTR BASED GRAIN EQUIV IMPORT REQ MT	582
NUTR BASED IMPORT REQUIREMENTS MTONS	582
IMPORT NEEDS NUTRITION BASED	340
TOTAL NEEDS IN METRIC TONS	2673
CALORIES AS % OF TOTAL INTAKE X1000	291
PERCAPITA NONFEED USE IN GRAMS	2673
PERCAPITA FEED USE IN GRAMS	2673
PERCAPITA TOTAL USE IN GRAMS	5346
INTERNATIONAL RESERVES $US1000	586
AID NEEDS STATUSQUO	348
STATQUO IMPORT REQUIREMENTS MET TON	2673
IMPORT NEEDS STATUSQUO	348
IMPORT, HISTORIC ONLY IN MET TONS	2673
PRODUCTION IN METRIC TONS	2673
DOMESTIC SUPPLY IN METRIC TONS	2673
FEED USE IN METRIC TONS	2673
NONFEED USE IN METRIC TONS	2673
TOTAL USE IN METRIC TONS	2673
EXPORTS, HISTORIC ONLY IN MET TONS	2673
GRAIN EQUIV CONVERSION FACTOR X1000	2664

USDA PRODUCTION

The USDA Economic Research Service (ERS) gathers agricultural production statistics available on a commodity-by-commodity basis for about 125 countries. The data covers the major commodities (about 65% coverage) produced by each country, including grains, limited fruits and vegetables, oilseeds, animals and major animal products, and other food and agricultural commodities. The data are gathered and adjusted by USDA attaches stationed around the world. Production data are expressed in volume (metric tons) and a value index (in constant U.S. dollars) and are generally available annually (calendar year) from 1950 to 1982. Database tape updates are provided semi annually and are available (for a shorter time series) in published form annually in USDA's World Indices of Agricultural and Food Production. The Production database is also used in the preparation of the USDA publication, World Production Index.

The data in PROD is collected in the field by the agricultural attaches in each embassy and adjusted by internal analysts in ERS. The data is, for the most part, consistent with FAO data with a few definitional differences. [NOTE ON FAO DATA NOT INCLUDED IN THIS DATABASE: The FAO database is not available on the AID mainframe and is only available through the USDA. The FAO database covers everything that the Production and FAS databases cover plus more commodities in more detail, broader country coverage, and a more global emphasis. It is recommended that the Production and FAS database capabilities be exhausted before requesting data from this massive FAO database.]

CONTENTS OF SAS DATA SET USDA.PROD
TRACKS USED=496 SUBEXTENTS=4 OBSERVATIONS=127836 CREATED BY TSO USERID D520LG ON CPUID 04-015B-020056
AT 10:31 TUESDAY, APRIL 24, 1984 BY SAS RELEASE 82.3 DSNAME=D520.SASDB.USDA BLKSIZE=6196 LRECL=72
OBSERVATIONS PER TRACK=258 GENERATED BY DATA
ALPHABETIC LIST OF VARIABLES

#	VARIABLE	TYPE	LENGTH	POSITION	FORMAT	INFORMAT	LABEL
1	CNTRY	CHAR	3	4	GEONAME40.		AID COUNTRY CODE - 3 DIGIT
2	COMMCODE	CHAR	7	7			CROP COMMODITY CODE - USDA
6	COMMNAME	CHAR	40	32			COMMODITY NAME
3	DFNAME	CHAR	8	14			COMMODITY VALUE, VOLUME, OR PRICE WEIGHT
5	VALUE	NUM	8	24			WEIGHT IN METRIC TONS/VALUE CONSTANT $US
4	YEAR	CHAR	2	22			CALENDER YEAR

SOURCE STATEMENTS

```
DATA USDA.PROD; SET NEW;
```

FIRST TEN RECORDS OF PRODUCTION DATABASE

OBS	CNTRY	COMMCODE	DENAME	YEAR	VALUE	COMMNAME
1	UNITED STATES	2111010	COMPRCWT	53	48	WHEAT,TOTAL
2	UNITED STATES	2111010	COMVAL	53	1532448	WHEAT,TOTAL
3	UNITED STATES	2111010	COMVOL	53	31926	WHEAT,TOTAL
4	UNITED STATES	2111010	COMVAL	54	1285296	WHEAT,TOTAL
5	UNITED STATES	2111010	COMVOL	54	26777	WHEAT,TOTAL
6	UNITED STATES	2111010	COMVAL	55	1224144	WHEAT,TOTAL
7	UNITED STATES	2111010	COMVOL	55	25503	WHEAT,TOTAL
8	UNITED STATES	2111010	COMVAL	56	1313376	WHEAT,TOTAL
9	UNITED STATES	2111010	COMVOL	56	27362	WHEAT,TOTAL
10	UNITED STATES	2111010	COMVAL	57	1248528	WHEAT,TOTAL

PROD COUNTRY

CNTRY	FREQUENCY
UNITED STATES	1952
AUSTRIA	1098
DENMARK	1098
FINLAND	976
FRANCE	1216
IRELAND	854
ITALY	1491
NETHERLANDS	1159
NORWAY	1037
PORTUGAL	1281
SPAIN	1525
SWEDEN	1098
SWITZERLAND	915
USSR	1708
UNITED KINGDOM	1098
YUGOSLAVIA	1769
EASTERN EUROPE	1220
POLAND	1586
BULGARIA	1586
CZECHOSLOVAKIA	1525
HUNGARY	1647
ROMANIA	1708
GERMAN DEMOCRATI	1281
CYPRUS	854
GREECE	1591
IRAN	2135
IRAQ	1525
LEBANON	1159
ISRAEL	1159
SAUDI ARABIA	1035
SYRIAN ARAB REPU	1220
TURKEY	2806
JORDAN	915
AFGHANISTAN	976
SRI LANKA	828
INDIA	2196

PROD COUNTRY, cont.

CNTRY	FREQUENCY
BANGLADESH	1647
CHINA, PEOPLES R	1342
BURMA	1098
TAIWAN	1525
JAPAN	1798
KOREA, REPUBLIC	1708
PHILIPPINES	1281
THAILAND	1017
INDONESIA	915
GUYANA	793
SURINAME	793
ARGENTINA	2070
BOLIVIA	1281
BRAZIL	2166
CHILE	1708
COLOMBIA	1570
COSTA RICA	915
CUBA	1159
DOMINICAN REPUBL	1499
ECUADOR	1342
EL SALVADOR	915
GUATEMALA	1098
HAITI	1098
HONDURAS	915
MEXICO	2371
NICARAGUA	793
PANAMA	671
PARAGUAY	1159
PERU	1511
URUGUAY	1084
VENEZUELA	1503
JAMAICA	1159
TRINIDAD AND TOB	976
BARBADOS	488
ZAMBIA	959
MALAWI	732
KENYA	1525
UGANDA	1220
NIGERIA	1708
TANZANIA, UNITED	1830
CAMEROON	1525
SIERRA LEONE	976
GHANA	1159
SUDAN	1159
ANGOLA	1281
MOZAMBIQUE	1220
ZAIRE	1525
ETHIOPIA	1525
LIBERIA	976
SOUTH AFRICA	2196
GUINEA	732
IVORY COAST	1708

PROD COUNTRY, cont.

CNTRY	FREQUENCY
NIGER	610
SENEGAL	793
UPPER VOLTA	915
MADAGASCAR	1281
MALI	488
TOGO	976
BURUNDI	1037
RWANDA	854
CANADA	1342
AUSTRALIA	1830
NEW ZEALAND	1159

PROD COMMODITY NAME

COMMNAME	FREQUENCY
ABACA	61
ALFALFA	61
ALMONDS	122
APPLES	2074
APRICOTS	122
AVACADO	61
BAMBARRA GROUNDN	61
BANANAS	2196
BANANAS AND PLAN	305
BARLEY,TOTAL	3294
BEANS,DRY	2379
BEEF VEAL BUFFAL	4453
BITTER ORANGE	122
BROAD BEANS	488
BROAD BEANS,FRES	61
CABBAGE	366
CANTALOUPE	122
CAROB	61
CARROTS	244
CASHEW	244
CASSAVA	2562
CASTOR BEANS	610
CATTLE,LIVE	366
CHERRIES	61
CHICKEN MEAT	549
CHICKPEAS	610
CHICORY	61
CITRONELLA	61
CITRUS FRUIT	549
CLOVES	122
COCOA BEANS	1281
COCONUTS	488
COFFEE,	2440
CONGO JUTE	61
COPRA	427
CORN,TOTAL	5063

PROD COMMODITY NAME, cont.

COMMNAME	FREQUENCY
COTTON	3355
COTTONSEED	3050
COW MILK	1769
COWPEAS	366
DATES	1037
DRY PEAS	427
EGGS	3599
FIGS	183
FILBERTS	122
FLAX FIBER'	366
FRUIT	122
FUR PELTS	61
GINGER	61
GOAT MILK	61
GOAT MEAT	61
GRAPES	1647
GRAPES,FOR TABLE	61
GRAPES,FOR WINE	61
GRASS SEEDS	122
HEMP FIBER	366
HENEQUEN	61
HIDES-SKINS	183
JUTE	427
KAPOK	61
KENAF	61
LENTILS	610
LINSEED (FLAX SE	671
MANGO	183
MEAT	915
MILK	7989
MILLET,TOTAL	2363
MOHAIR	61
MUTTON LAMB GOAT	2806
NON CENTRIFUGAL	183
OATS	2257
OLIVE OIL	183
OLIVES	488
OLIVES,FOR OIL	61
ONIONS	1403
ORANGES	1159
ORANGES AND TANG	366
OTHER DRIED FRUI	61
OTHER FRUIT	305
OTHER GRAINS	1263
OTHER ROOT VEGET	61
PALM KERNELS	671
PALM OIL	793
PAPAYA	61
PEACHES	610
PEANUTS,IN SHELL	7989
PEARS	1220
PEAS,FRESH	61

PROD COMMODITY NAME, cont.

COMMNAME	FREQUENCY
PEPPER	61
PEPPERS,GREEN	122
PERSIMMON	122
PIG MEAT	3782
PIGEON PEAS	122
PISTACHIO	122
PLANTAINS	793
PLUMS	549
POME FRUIT	671
POTATOES,TOTAL	4209
POULTRY MEAT	2806
PULSES	1403
PYRETHRUM	122
QUINCE	61
RAISINS	183
RAMIE	183
RAPESEED,TOTAL	1159
RICE,TOTAL	4417
ROOTS AND TUBERS	61
RUBBER GUM,RESIN	732
RYE,TOTAL	1952
SAFFLOWER SEED	61
SESAME SEED	1403
SHEEP MILK	122
SISAL	488
SORGHUM,TOTAL	2227
SOYBEANS	1525
SPICES	61
STONE FRUIT	427
STRAWBERRIES	61
SUGAR,RAW	1403
SUGARBEETS	1708
SUGARCANE	1952
SUNFLOWER SEED	1037
SWEETPOTATOES	1952
SWEETPOTATOES AN	549
TARO	305
TEA	1037
TOBACCO	3782
TOMATOES	1769
TUNG NUTS	122
TURKEY MEAT	61
UNKNOWN IDENTIFY	366
VANILLA	61
VEGETABLES	671
VETCH	305
WALNUTS,IN SHELL	122
WATERMELON	183
WHEAT/TOTAL	3923
WINE	122
WOOL,GREASY	1281
YAMS	427

PRODVAL

The data in the PRODVAL database is the same data as in the previous PROD database but set up in a different format. The PRODVAL database is designed to be used in time-series analysis. See contents and sample data table below:

CONTENTS OF SAS DATA SET USDA.PRODVAL
TRACKS USED=71 SUBEXTENTS=3 OBSERVATIONS=4204 CREATED BY TSO USERID D520LG ON CPUID 04-0158-020056
AT 10:31 TUESDAY, APRIL 24, 1984 BY SAS RELEASE 82.3 DSNAME=D520.SASDB.USDA BLKSIZE=6204 LRECL=310
OBSERVATIONS PER TRACK=60 GENERATED BY DATA
ALPHABETIC LIST OF VARIABLES

#	VARIABLE	TYPE	LENGTH	POSITION	FORMAT	INFORMAT	LABEL
1	CNTRY	CHAR	3	4	GEONAME40.		AID COUNTRY CODE
2	COMMCODE	CHAR	7	7			CROP COMMODITY CODE - USDA
3	COMMNAME	CHAR	40	14			COMMODITY NAME
5	COMPRCWT	NUM	8	62			COMMODITY PRICE WEIGHT
4	DENAME	CHAR	8	54			COMMODITY VALUE OR VOLUME
6	VAL53	NUM	8	70			VALUES ARE FOR CALENDER YEAR
7	VAL54	NUM	8	78			
8	VAL55	NUM	8	86			
9	VAL56	NUM	8	94			
10	VAL57	NUM	8	102			
11	VAL58	NUM	8	110			
12	VAL59	NUM	8	118			
13	VAL60	NUM	8	126			
14	VAL61	NUM	8	134			
15	VAL62	NUM	8	142			
16	VAL63	NUM	8	150			
17	VAL64	NUM	8	158			
18	VAL65	NUM	8	166			
19	VAL66	NUM	8	174			
20	VAL67	NUM	8	182			
21	VAL68	NUM	8	190			
22	VAL69	NUM	8	198			
23	VAL70	NUM	8	206			
24	VAL71	NUM	8	214			
25	VAL72	NUM	8	222			
26	VAL73	NUM	8	230			
27	VAL74	NUM	8	238			
28	VAL75	NUM	8	246			
29	VAL76	NUM	8	254			
30	VAL77	NUM	8	262			
31	VAL78	NUM	8	270			
32	VAL79	NUM	8	278			
33	VAL80	NUM	8	286			
34	VAL81	NUM	8	294			
35	VAL82	NUM	8	302			

SOURCE STATEMENTS

```
DATA USDA.PRODVAL; SET USDA.PRODVAL; IF CNTRY ]=' ';
```

FIRST TEN RECORDS OF DATABASE PRODVAL

OBS	CNTRY	COMMCODE	COMMNAME	DENAME	COMPRCWT	VAL53	VAL54	VAL55	VAL56	VAL57	VAL58
1	UNITED STATES	2111010	WHEAT,TOTAL	COMVAL	48	1532448	1285296	1224144	1313376	1248528	1903920
2	UNITED STATES	2111010	WHEAT,TOTAL	COMVOL	48	31926	26777	25503	27362	26011	39665
3	UNITED STATES	2111030	RYE,TOTAL	COMVAL	38	18240	25042	28082	20558	27512	32034
4	UNITED STATES	2111030	RYE,TOTAL	COMVOL	38	480	659	739	541	724	843
5	UNITED STATES	2111040	RICE,TOTAL	COMVAL	114	273258	331968	289104	255702	221958	231420
6	UNITED STATES	2111040	RICE,TOTAL	COMVOL	114	2397	2912	2536	2243	1947	2030
7	UNITED STATES	2111060	CORN,TOTAL	COMVAL	47	3440447	3232848	3429919	3671499	3635732	4006844
8	UNITED STATES	2111060	CORN,TOTAL	COMVOL	47	73201	68784	72977	78117	77356	85252
9	UNITED STATES	2111070	BARLEY,TOTAL	COMVAL	44	236368	363308	386144	360844	424160	457292
10	UNITED STATES	2111070	BARLEY,TOTAL	COMVOL	44	5372	8257	8776	8201	9640	10393

OBS	VAL59	VAL60	VAL61	VAL62	VAL63	VAL64	VAL65	VAL66	VAL67	VAL68	VAL69	VAL70
1	1460160	1769712	1609872	1426464	1498128	1676544	1718640	1704624	1969440	2033520	1884624	1765584
2	30420	36869	33539	29718	31211	34928	35805	35513	41030	42365	39263	36783
3	22268	31958	26372	39292	28158	31350	32148	26828	23104	22154	29146	35568
4	586	841	694	1034	741	825	846	706	608	583	767	936
5	277362	282264	280212	341544	363318	378366	394440	439584	462156	538536	475266	433314
6	2433	2476	2458	2996	3187	3319	3460	3856	4054	4724	4169	3801
7	4566003	4664327	4295283	4305435	4798371	4159688	4898246	4975514	5802573	5312128	5595679	4956808
8	97149	99241	91389	91605	102093	88504	104218	105862	123459	113024	119057	105464
9	402556	410960	375936	409772	376332	369820	376552	375628	358028	408232	409112	398596
10	9149	9340	8544	9313	8553	8405	8558	8537	8137	9278	9298	9059

OBS	VAL71	VAL72	VAL73	VAL74	VAL75	VAL76	VAL77	VAL78	VAL79	VAL80	VAL81	VAL82
1	2114496	2019888	2234880	2327808	2778480	2807040	2660112	2319456	2787840	3101664	3649200	3678000
2	44052	42081	46560	48496	57885	58480	55419	48322	58080	64618	76025	76625
3	47500	27284	23826	16910	15390	14364	15960	23218	23142	17062	19266	20596
4	1250	718	627	445	405	378	420	611	609	449	507	542
5	443460	441750	479712	581172	664164	598044	513114	688560	682290	755706	958512	816468
6	3890	3875	4208	5098	5826	5246	4501	6040	5985	6629	8408	7162
7	6740834	6661498	6770021	5612787	6973014	7508344	7766002	8676858	9477832	7932989	9790758	9931288
8	143422	141734	144043	119421	148362	159752	165216	184614	201656	168787	208314	211304
9	442992	404008	399916	286132	363220	366916	409816	435644	366696	345796	458216	494516
10	10068	9182	9089	6503	8255	8339	9314	9901	8334	7859	10414	11239

NOTE: Countries and commodities are the same as the PROD database above.

USDA GRAIN DATABASE

The USDA Economic Research Service (ERS) grain database includes statistics for 109 countries for the major grains, such as rice, wheat, corn, rye, barley, oats, sorghum, millet and others. For each grain, infomation is available on the country's production, area and yield. The data is available annually (calendar year) for 1950 to 1982. Database updates are provided semi-annually.
NOTE: The grain database is a subset of the PRODUCTION database with more detail on grain.

CONTENTS OF SAS DATA SET USDA.GRAIN
TRACKS USED=102 SUBEXTENTS=2 OBSERVATIONS=18561 CREATED BY OS JOB D121JCCI ON CPUID 04-4341 014380
AT 4:21 THURSDAY, DECEMBER 15, 1983 BY SAS RELEASE 82.3 DSNAME=D520.SASDB.USDA BLKSIZE=19059 LRECL=103
OBSERVATIONS PER TRACK=185 GENERATED BY PROC COPY
ALPHABETIC LIST OF VARIABLES

#	VARIABLE	TYPE	LENGTH	POSITION	FORMAT	INFORMAT	LABEL
3	AREA	NUM	8	20			AREA IN HECTARES
8	CNTRY	CHAR	3	60	GEONAME		AID COUNTRY CODE (3 DIGITS)
1	COMMCODE	NUM	8	4			CROP COMMODITY CODE - USDA
9	COMMNAME	CHAR	40	63			COMMODITY NAME
4	PROD	NUM	8	28			PRODUCTION IN METRIC TONS
6	PRODMLL	NUM	8	44			PROD MILLED FORM RICE ONLY METRIC TONS
5	PRODPDY	NUM	8	36			PROD PADDY FORM RICE ONLY METRIC TONS
2	YEAR	NUM	8	12			CALENDER YEAR
7	YIELD	NUM	8	52			YIELD IN KILOGRAMS PER HECTARE

FIRST TEN RECORDS OF GRAIN DATABASE

OBS	COMMCODE	YEAR	AREA	PROD	PRODPDY	PRODMLL	YIELD	CNTRY	COMMNAME
1	2111010	50	24931490	27741957	.	.	1113	UNITED STATES	WHEAT,TOTAL
2	2111010	51	25039137	26893296	.	.	1074	UNITED STATES	WHEAT,TOTAL
3	2111010	52	28785315	35555418	.	.	1235	UNITED STATES	WHEAT,TOTAL
4	2111010	53	27453898	31925714	.	.	1163	UNITED STATES	WHEAT,TOTAL
5	2111010	54	21997112	26777330	.	.	1217	UNITED STATES	WHEAT,TOTAL
6	2111010	55	19137601	25503482	.	.	1333	UNITED STATES	WHEAT,TOTAL
7	2111010	56	20140413	27362382	.	.	1359	UNITED STATES	WHEAT,TOTAL
8	2111010	57	17706631	26010942	.	.	1469	UNITED STATES	WHEAT,TOTAL
9	2111010	58	21467378	39664822	.	.	1848	UNITED STATES	WHEAT,TOTAL
10	2111010	59	20928741	30419717	.	.	1453	UNITED STATES	WHEAT,TOTAL

GRAIN COUNTRY

CNTRY	FREQUENCY
UNITED STATES	330
GERMAN FEDERAL R	456
AUSTRIA	380
BELGIUM	206
DENMARK	250
FINLAND	209
FRANCE	405
IRELAND	132
ITALY	293
NETHERLANDS	297
NORWAY	165
PORTUGAL	198
SPAIN	287
SWEDEN	259
SWITZERLAND	388
USSR	417
UNITED KINGDOM	172
YUGOSLAVIA	264
POLAND	231
BULGARIA	221
CZECHOSLOVAKIA	165
HUNGARY	218
ROMANIA	221
GERMAN DEMOCRATI	360
CYPRUS	66
GREECE	271
EGYPT, ARAB REPU	165
IRAN	132
IRAQ	165
LEBANON	66
ISRAEL	99
SAUDI ARABIA	197
SYRIAN ARAB REPU	99
TURKEY	345
JORDAN	66
AFGHANISTAN	132
SRI LANKA	253
INDIA	302
BANGLADESH	132
PAKISTAN	198
CHINA, PEOPLES R	99
BURMA	132
MALAYSIA	66
TAIWAN	262
JAPAN	346
KOREA, REPUBLIC	457
PHILIPPINES	66
THAILAND	86
INDONESIA	116
GUYANA	115
SURINAME	33
ARGENTINA	325

GRAIN COUNTRY, cont.

CNTRY	FREQUENCY
BOLIVIA	132
BRAZIL	213
CHILE	198
COLOMBIA	154
COSTA RICA	75
CUBA	66
DOMINICAN REPUBL	83
ECUADOR	132
EL SALVADOR	99
GUATEMALA	132
HAITI	99
HONDURAS	99
MEXICO	191
NICARAGUA	99
PANAMA	66
PARAGUAY	99
PERU	155
URUGUAY	188
VENEZUELA	85
JAMAICA	66
TRINIDAD AND TOB	33
BARBADOS	33
MOROCCO	231
ZAMBIA	87
MALAWI	66
ZIMBABWE(SOUTHER	146
KENYA	198
UGANDA	109
NIGERIA	132
TANZANIA, UNITED	165
CAMEROON	99
SIERRA LEONE	99
ALGERIA	164
GHANA	132
SUDAN	132
ANGOLA	132
MOZAMBIQUE	165
ZAIRE	132
ETHIOPIA	198
TUNISIA	132
LIBERIA	66
LIBYAN ARAB REPU	66
SOUTH AFRICA	198
GUINEA	99
BENIN	122
IVORY COAST	132
NIGER	132
SENEGAL	99
UPPER VOLTA	132
MADAGASCAR	66
MALI	99
TOGO	99

GRAIN COUNTRY, cont.

CNTRY	FREQUENCY
BURUNDI	175
RWANDA	99
CANADA	231
AUSTRALIA	283
NEW ZEALAND	132

GRAIN COMMODITY NAME

COMMNAME	FREQUENCY
BARLEY,BEER	33
BARLEY,COMMON	48
BARLEY,COMMON2RO	10
BARLEY,COMMON6RO	10
BARLEY,GRAIN	33
BARLEY,NAKED	66
BARLEY,SPRING	183
BARLEY,TOTAL	1980
BARLEY,WINTER	183
BUCKWHEAT	183
CANARY SEED	85
CORN, 2ND CROP	19
CORN,FIRST CROP	19
CORN,TOTAL	3025
GRAINS,NES	77
MILLET,BARNYARD	84
MILLET,FOXTAIL I	53
MILLET,KEERAHKA,	38
MILLET,MENERI,MA	19
MILLET,MENERI,YA	19
MILLET,PROSO COM	84
MILLET,RAGI	31
MILLET,RAJRA	64
MILLET,SMALL	31
MILLET,TOTAL	880
MIXED GRAINS,MES	75
MIXED GRAINS,SUM	74
MIXED GRAINS,TOT	495
MIXED GRAINS,WIN	66
OATS	1320
OTHER GRAINS	33
RICE,IRRIGATED	58
RICE,MAIN CROP	96
RICE,NOT IRRIGAT	57
RICE,SECONDARY C	103
RICE,THIRD CROP	12
RICE,TOTAL	2565
RYE,SPRING	138
RYE,TOTAL	1105
RYE,WINTER	148
SORGHUM&MILLET	318
SORGHUM,MAINCROP	18

GRAIN COMMODITY NAME, cont.

COMMNAME	FREQUENCY
SORGHUM,SECONDCR	18
SORGHUM,TOTAL	1363
TEFF	33
WHEAT,DURUM	33
WHEAT,HARD	28
WHEAT,OTHER	52
WHEAT,SOFT	19
WHEAT,SPELT	117
WHEAT,SPRING	308
WHEAT,TOTAL	2344
WHEAT,WINTER	308

GRAINVAL

The data in the GRAINVAL database is the same data as in the previous GRAIN database but set up in a different format. The GRAINVAL database is designed to be used in time-series analysis. See contents and sample data table below:

CONTENTS OF SAS DATA SET USDA.GRAINVAL

TRACKS USED=61 SUBEXTENTS=1 OBSERVATIONS=3030 CREATED BY TSO USERID D520LG ON CPUID 04-0158-020056

AT 16:03 MONDAY, APRIL 23, 1984 BY SAS RELEASE 82.3 DSNAME=D520.SASDB.USDA BLKSIZE=6209 LRECL=365

OBSERVATIONS PER TRACK=51 GENERATED BY DATA

ALPHABETIC LIST OF VARIABLES

#	VARIABLE	TYPE	LENGTH	POSITION	FORMAT	INFORMAT	LABEL
1	CNTRY	CHAR	3	4	GEONAME		AID COUNTRY CODE (3 DIGITS)
2	COMMCODE	NUM	8	7			CROP COMMODITY CODE - USDA
3	COMMNAME	CHAR	40	15			COMMODITY NAME
5	DEFINITN	CHAR	38	63			DENAME DEFINITION
4	DENAME	CHAR	8	55			AREA,PRODUCTION, OR YIELD
6	VAL50	NUM	8	101			VALUES ARE FOR CALENDER YEAR
7	VAL51	NUM	8	109			
8	VAL52	NUM	8	117			
9	VAL53	NUM	8	125			
10	VAL54	NUM	8	133			
11	VAL55	NUM	8	141			
12	VAL56	NUM	8	149			
13	VAL57	NUM	8	157			
14	VAL58	NUM	8	165			
15	VAL59	NUM	8	173			
16	VAL60	NUM	8	181			
. . . VAL61 through VAL75 . . .							
31	VAL75	NUM	8	301			
32	VAL76	NUM	8	309			
33	VAL77	NUM	8	317			
34	VAL78	NUM	8	325			
35	VAL79	NUM	8	333			
36	VAL80	NUM	8	341			
37	VAL81	NUM	8	349			
38	VAL82	NUM	8	357			

SOURCE STATEMENTS

```
DATA USDA.GRAINVAL; SET NEW;
```

FIRST TEN RECORDS OF DATABASE GRAINVAL

OBS	CNTRY	COMMCODE	COMMNAME	DENAME	DEFINITN	VAL50	VAL51	VAL52	VAL53	VAL54
1	UNITED STATES	2111010	WHEAT,TOTAL	AREA	AREA IN HECTARES	24931490	25039137	28785315	27453898	21997112
2	UNITED STATES	2111010	WHEAT,TOTAL	PROD	PRODUCTION IN METRIC TONS	27741957	26893296	35555418	31925714	26777330
3	UNITED STATES	2111010	WHEAT,TOTAL	PRODPDY	PROD PADDY FORM RICE ONLY METRIC TONS	.	.	.	.	.
4	UNITED STATES	2111010	WHEAT,TOTAL	PRODMLL	PROD MILLED FORM RICE ONLY METRIC TONS	.	.	.	.	.
5	UNITED STATES	2111010	WHEAT,TOTAL	YIELD	YIELD IN KILOGRAMS PER HECTARE	1113	1074	1235	1163	1217
6	UNITED STATES	2111011	WHEAT,WINTER	AREA	AREA IN HECTARES	17502670	16225076	20596494	18993128	15870976
7	UNITED STATES	2111011	WHEAT,WINTER	PROD	PRODUCTION IN METRIC TONS	20156806	17712446	28990495	24086588	21809658
8	UNITED STATES	2111011	WHEAT,WINTER	PRODPDY	PROD PADDY FORM RICE ONLY METRIC TONS	.	.	.	.	.
9	UNITED STATES	2111011	WHEAT,WINTER	PRODMLL	PROD MILLED FORM RICE ONLY METRIC TONS	.	.	.	.	.
10	UNITED STATES	2111011	WHEAT,WINTER	YIELD	YIELD IN KILOGRAMS PER HECTARE	1152	1092	1408	1268	1374

OBS	VAL55	VAL56	VAL57	VAL58	VAL59	VAL60	VAL61	VAL62	VAL63	VAL64	VAL65	VAL66	VAL67	VAL68
1	19137601	20140413	17706631	21467378	20928741	20994705	20870062	17679922	18415641	20137985	20056238	20077687	23614642	22162629
2	25503482	27362382	26010942	39664822	30419717	36869083	33539266	29718183	31211307	34927583	35804793	35513207	41030033	42364600
3	.	.	.	.	.	.	.	.	.	.	.	.	.	.
4	.	.	.	.	.	.	.	.	.	.	.	.	.	.
5	1333	1359	1469	1848	1453	1756	1607	1681	1695	1734	1785	1769	1737	1912
6	13640751	14379303	12816406	16601434	16010188	16198367	16492573	13651678	14085906	15408419	15210528	15627355	18226653	16968079
7	19204237	20155582	19371938	31938423	24977080	30247388	29251410	22395281	24877416	27786672	27680205	28776880	32498546	33136368
8	.	.	.	.	.	.	.	.	.	.	.	.	.	.
9	.	.	.	.	.	.	.	.	.	.	.	.	.	.
10	1408	1402	1511	1924	1560	1867	1774	1640	1766	1803	1820	1841	1783	1953

OBS	VAL69	VAL70	VAL71	VAL72	VAL73	VAL74	VAL75	VAL76	VAL77	VAL78	VAL79	VAL80	VAL81	VAL82
1	19079326	17629741	19297452	19142862	21912938	26453514	28125272	28703164	26895836	22862736	25274259	28726231	32758522	31955625
2	39263230	36783327	44051988	42080851	46559924	48495789	57885382	58480122	55419413	48321773	58079510	64617925	76024757	76625458
3	.	.	.	.	.	.	.	.	.	.	.	.	.	.
4	.	.	.	.	.	.	.	.	.	.	.	.	.	.
5	2058	2086	2283	2198	2125	1833	2058	2037	2061	2114	2298	2249	2321	2398
6	14691316	13234042	13099686	14106949	15680368	18930402	20791148	20063523	19693640	15576769	17574299	20838901	23710148	23673322
7	30792678	29712359	31162047	32291136	34787396	3[illegible]435628	44712345	42568253	41833299	33269479	43578384	51583796	57117687	57319898
8	.	.	.	.	.	.	.	.	.	.	.	.	.	.
9	.	.	.	.	.	.	.	.	.	.	.	.	.	.
10	2096	2245	2379	2289	2219	1978	2151	2122	2124	2136	2480	2475	2409	2421

NOTE: Countries and commodities are the same as the GRAIN database above.

FOREIGN AGRICULTURE SERVICE DATABASE: OSF

The USDA's Foreign Agicultural Service database includes supply and utilization data for grain, oilseed, animals, and major animal products. Data is annual, based on crop year, and covers 1960-1982 for 120 countries. Variables include area yield, production, inventory, imports, exports, consumption, feed use, and total domestic use. The primary data source is the FAS attaches in the field, supplemented by FAO and ERS data. The data collection process is similar to that of the production database except that the ERS analysts work with the FAS analysts in adjusting the data collected by the agricultural attaches in the field. This database is oriented toward U.S. trade.

CONTENTS OF SAS DATA SET USDA.OSF
TRACKS USED=177 SUBEXTENTS=3 OBSERVATIONS=31174 CREATED BY TSO USERID D520LG ON CPUID 04-0158-020056
AT 10:31 TUESDAY, APRIL 24, 1984 BY SAS RELEASE 82.3 DSNAME=D520.SASDB.USDA BLKSIZE=6199 LRECL=105
OBSERVATIONS PER TRACK=177 GENERATED BY DATA
ALPHABETIC LIST OF VARIABLES

#	VARIABLE	TYPE	LENGTH	POSITION	FORMAT	INFORMAT	LABEL
1	CNTRY	CHAR	3	4	GEONAME40.		AID COUNTRY CODE - 3 DIGIT
2	COMMCODE	CHAR	2	7	OSFCM22.		CROP COMMODITY CODE
3	DESCCODE	CHAR	3	9	OSFDE22.		DESCRIPTION CODE
4	UNITCODE	CHAR	1	12	OSFUN16.		UNIT OF MEASURE CODE
5	VAL60	NUM	4	13			VALUES ARE FOR CROP YEAR
6	VAL61	NUM	4	17			
7	VAL62	NUM	4	21			
8	VAL63	NUM	4	25			
9	VAL64	NUM	4	29			
. . . VAL65 through VAL74 . . .							
20	VAL75	NUM	4	73			
21	VAL76	NUM	4	77			
22	VAL77	NUM	4	81			
23	VAL78	NUM	4	85			
24	VAL79	NUM	4	89			
25	VAL80	NUM	4	93			
26	VAL81	NUM	4	97			
27	VAL82	NUM	4	101			

SOURCE STATEMENTS

```
DATA USDA.OSF; SET NEW;
```

FIRST TEN RECORDS OF DATABASE OSF

OBS	CNTRY	COMMCODE	DESCCODE	UNITCODE	VAL60	VAL61	VAL62	VAL63	VAL64	VAL65	VAL66
1	UNITED STATES	COPRA MEAL	NET IMPORTS, CROP YR	1000 METRIC TONS	.	.	.	.	.	12.000	9.00
2	UNITED STATES	COPRA MEAL	TOTAL IMPORTS	1000 METRIC TONS	.	.	.	.	.	12.000	9.00
3	UNITED STATES	COPRA MEAL	PRODUCTION	1000 METRIC TONS	.	.	.	.	.	98.000	85.00
4	UNITED STATES	COPRA MEAL	ROUGH PRODUCTION	1000 METRIC TONS	.	.	.	.	.	279.000	243.00
5	UNITED STATES	COPRA MEAL	TOTAL DOMESTIC USE	1000 METRIC TONS	.	.	.	.	.	110.000	94.00
6	UNITED STATES	COPRA MEAL	SEED AND OTHER USE	1000 METRIC TONS	.	.	.	.	.	110.000	94.00
7	UNITED STATES	COPRA MEAL	MILLING RATE	PERCENT	.	.	.	.	.	0.351	0.35
8	UNITED STATES	COPRA OIL(COCONUT)	BEGINNING INVENTORY	1000 METRIC TONS	.	.	.	.	.	70.000	40.00
9	UNITED STATES	COPRA OIL(COCONUT)	ENDING INVENTORY	1000 METRIC TONS	.	.	.	.	.	40.000	33.00
10	UNITED STATES	COPRA OIL(COCONUT)	NET IMPORTS, CROP YR	1000 METRIC TONS	.	.	.	.	.	180.000	224.00

OBS	VAL67	VAL68	VAL69	VAL70	VAL71	VAL72	VAL73	VAL74	VAL75	VAL76	VAL77	VAL78	VAL79	VAL80	VAL81	VAL82
1	6.000	21.000	22.000	6.00	3.000	12.000	16.000	14.000	3	33	6	4	5	5	5	0
2	6.000	21.000	22.000	6.00	3.000	12.000	16.000	14.000	3	33	6	4	5	5	5	0
3	97.000	102.000	95.000	69.00	67.000	73.000	70.000	9.000	0	0	0	0	0	0	0	0
4	276.000	292.000	272.000	197.00	190.000	209.000	199.000	27.000	0	0	0	0	0	0	0	0
5	103.000	123.000	117.000	75.00	70.000	85.000	86.000	23.000	3	33	6	4	5	5	5	0
6	103.000	123.000	117.000	75.00	70.000	85.000	86.000	0.000	0	0	0	0	0	0	5	0
7	0.351	0.349	0.349	0.35	0.353	0.349	0.352	0.333	0	0	0	0	0	0	0	0
8	33.000	40.000	40.000	27.00	46.000	47.000	53.000	48.000	54	52	56	61	67	99	106	79
9	40.000	40.000	27.000	46.00	47.000	53.000	48.000	54.000	52	56	61	67	99	106	79	65
10	227.000	195.000	191.000	266.00	278.000	304.000	322.000	243.000	391	532	450	459	439	384	459	394

OSF COUNTRY CNTRY	FREQUENCY
UNITED STATES	585
PUERTO RICO	19
VIRGIN ISLANDS	1
GERMAN FEDERAL REP	523
AUSTRIA	325
BELGIUM	42
MALTA	100
DENMARK	409
FINLAND	285
FRANCE	568
ICELAND	58
IRELAND	385
ITALY	536
LUXEMBOURG	6
NETHERLANDS	512
NORWAY	361
PORTUGAL	459
SPAIN	468
SWEDEN	404
SWITZERLAND	396
USSR	426
UNITED KINGDOM	492
YUGOSLAVIA	431
POLAND	395
ALBANIA	99
BULGARIA	277
CZECHOSLOVAKIA	279
HUNGARY	297
ROMANIA	277
GERMAN DEMOCRATI	291
CYPRUS	123
GREECE	373
EGYPT, ARAB REPU	246
IRAN	277
IRAQ	175
KUWAIT	72
LEBANON	253
ISRAEL	331
SAUDI ARABIA	142
YEMEN, PEO DEM R	87
SYRIAN ARAB REPU	184
TURKEY	361
JORDAN	129
YEMEN, ARAB REP	104
UNITED ARAB EMIR	32
AFGHANISTAN	110
BHUTAN	53
NEPAL	87
SRI LANKA	115
INDIA	416
BANGLADESH	157
PAKISTAN	236

OSF COUNTRY, cont.

CNTRY	FREQUENCY
KOREA, DEMOCRATI	120
CHINA, PEOPLES R	251
MONGOLIA	32
LAOS	27
VIETNAM	10
KAMPUCHEA(CAMBOD	104
MACAU (MACAO)	15
HONG KONG	164
SINGAPORE	154
BURMA	130
MALAYSIA	295
TAIWAN	296
BRUNEI	26
JAPAN	505
KOREA, REPUBLIC	321
SAMOA, WESTERN	18
PHILIPPINES	361
THAILAND	269
INDONESIA	267
BAHAMAS	5
BERMUDA	6
GUYANA	117
BELIZE	14
NETHERLANDS ANTI	14
SURINAME	70
ARGENTINA	465
BOLIVIA	184
BRAZIL	454
CHILE	304
COLOMBIA	340
COSTA RICA	249
CUBA	146
DOMINICAN REPUBL	301
ECUADOR	348
EL SALVADOR	242
GUATEMALA	264
HAITI	178
HONDURAS	239
MEXICO	523
NICARAGUA	270
PANAMA	199
PARAGUAY	193
PERU	404
URUGUAY	293
VENEZUELA	406
JAMAICA	163
TRINIDAD AND TOB	141
BARBADOS	18
DOMINICA	5
GRENADA	10
ST. LUCIA	24
ST. VINCENT AND	7

OSF COUNTRY, cont.

CNTRY	FREQUENCY
GUADELOUPE	13
MARTINIQUE	14
COMOROS	15
DJIBOUTI	5
REUNION	24
MOROCCO	299
ZAMBIA	169
MALAWI	127
ZIMBABWE(SOUTHER	226
KENYA	184
UGANDA	155
NIGERIA	263
TANZANIA, UNITED'	211
CAMEROON	158
LESOTHO	57
BOTSWANA	50
GAMBIA	66
SIERRA LEONE	94
SIERRA LEONE 94
ALGERIA	173
GHANA	162
MAURITIUS	44
SWAZILAND	67
SOMALIA	121
SUDAN	159
EQUATORIAL GUINE	23
ANGOLA	170
CAPE VERDE	17
MOZAMBIQUE	190
GUINEA BISSAU	60
SAO TOME AND PRI	24
ZAIRE	188
SEYCHELLES	5
ETHIOPIA	154
TUNISIA	154
LIBERIA	91
LIBYAN ARAB REPU	92
SOUTH AFRICA	419
GUINEA	102
CENTRAL AFRICAN	56
CHAD	94
GABON	52
CONGO, PEOPLES R	57
BENIN	155
IVORY COAST	234
MAURITANIA	43
NIGER	111
SENEGAL	183
UPPER VOLTA	141
MADAGASCAR	145
MALI	120
TOGO	123
BURUNDI	57

OSF COUNTRY

CNTRY	FREQUENCY
RWANDA	40
CANADA	447
SOLOMON ISLANDS	9
KIRIBATI	5
AUSTRALIA	466
FIJI	45
TONGA	16
NEW CALEDONIA	16
PAPUA NEW GUINEA	36
NEW ZEALAND	236
VANUATU	12

OSF CROP COMMODITY CODE

COMMCODE	FREQUENCY
COPRA MEAL	287
COPRA OIL(COCONU	421
COPRA (SHELLD CO	351
BARLEY	880
COCOA BEAN	440
BUTTER	246
BEEF AND VEAL	468
BEEF COWS	37
CHEESE	239
ALL CATTLE	322
COARSE GRAINS	1540
COTTONSEED OIL	566
COTTONSEED MEAL	635
CASEIN AND CASEI	58
CORN	1405
COTTONSEED	610
COTTON	1090
CALVES	121
COWS	83
CHICKENS,GT 16 W	140
CHICKENS,LT 16 W	207
OTHER CATTLE	49
EGGS	364
EWES	41
FLAXSEED	183
FISH MEAL	288
COFFEE,GREEN	757
GOAT NUMBERS	126
HORSE NUMBERS	222
HOGS	283
OTHER SWINE	47
HORSE MEAT	199
PALM FRUIT OIL	295
PALM KERNEL OIL	279
PALM NUTS	261
LAMBS	155

BEST AVAILABLE COPY

OSF CROP COMMODITY CODE, cont.

COMMCODE	FREQUENCY
LAMB, MUTTON & G	367
LINSEED OIL	68
LAYERS	39
ALL MEAT	505
MILK COWS	87
FLUID MILK	259
MILK, NONFAT, DR	210
FISH OIL	185
OLIVES	80
OLIVE OIL	242
OTHER POULTRY ME	126
PIGS	70
PEANUT OIL	423
PEANUT MEAL	383
PEANUTS IN SHELL	531
PORK	424
POULTRY MEAT TOT	241
RICE	1634
RED MEAT	478
SOYBEANS	707
SESAME SEED	16
SUNFLOWER SEED	376
SORGHUM	837
SHEEP	247
SOYBEAN MEAL	821
SOYBEAN OIL	920
SUGAR,REFINED	1103
SOWS	57
OTHER SHEEP	39
TOTAL CEREALS	1998
TOTAL GRAINS	1686
TURKEY MEAT	136
SUNFLOWER MEAL	314
SUNFLOWER OIL	423
WHEAT	1447

BEST AVAILABLE COPY

OSF DESCRIPTION CODE

DESCCODE	FREQUENCY
AREA HARVESTED	1224
AREA PLANTED	148
BEGINNING INVENT	1962
IN LACTATION	40
ENDING INVENTORY	1740
ANIMALS SLAUGHTE	731
PRICE DATA 1	15
PRICE DATA 2	36
PRICE DATA 3	41
PRICE DATA 4	32
NET IMPORTS JULY	1293
JULY JUNE IMPORT	1134
NET IMPORTS, CRO	2958
IMPORTS O/T SLAU	12
TOTAL IMPORTS	2426
IMPORTS FROM U.S	928
NEWBORN	111
PRODUCTION (OTHE	19
PRODUCTION	2715
ROUGH PRODUCTION	824
PRODUCTION (COW)	40
DOMESTIC CONSUMP	105
DEATH LOSS	90
DESTROYED OR LOS	53
TOTAL DOMESTIC U	3111
DOMESTIC FEED US	1042
FEED AND OTHER U	26
CIVILIAN CONSUMP	296
DOMESTIC HUMAN C	1455
INDUSTRY USE	38
HATCHING	28
SHELL	40
OTHER CONSUMPTIO	13
SEED AND OTHER U	764
OTHER USE	102
JULY JUNE EXPORT	874
TOTAL EXPORTS	2072
EXPORTS TO U.S.	33
YIELD PER ANIMAL	334
BIRTHS / BREEDIN	100
YIELD	1224
ROUGH YIELD	187
MILLING RATE	717
YIELD PER COW	40

BEST AVAILABLE COPY

OSF UNIT OF MEASURE CODE

UNITCODE	FREQUENCY
HEAD PER YEAR	100
KG PER HEAD	326
MILLION HEAD	2097
MILLION PIECES	348
PERCENT	717
PIECE PER HEAD	15
PIECE PER PIECE	23
PIECE/HECTARE	1
TONS PER HECTARE	1420
1,000 HECTARES	1182
1,000 MT IN CWE	1941
1000 METRIC TONS'	22804

BEST AVAILABLE COPY

INTERNATIONAL STATISTICAL DATA BASES OUTLINE
(Time Series)
Available from PPC/CDIE/EASA
Agency for International Development

DATA BASE NAME AND SOURCE	SHORT DESCRIPTION
World Bank	
World Tables (WTAB)	World Tables provides economic and financial time-series data gathered and adjusted by World Bank's Economic and Social Data division. Data are generally available annually for the period 1960 to 1982 for about 180 countries. Variables include national accounts, such as gross domestic product by industrial origins and expenditures, foreign exchange rates, production indices, and price indices. Data are generally expressed at current prices in local currencies. The national accounts data are frequently available at constant prices as well. The data base tape was last updated in Sept 1984. A published form appears every few years in the World Bank's World Tables.
World Debt Tables (WDEBT)	World Debt Tables provide time-series external debt statistics for 101 countries gathered by the World Bank External Debt division. Data are generally available annually for the historical period 1970 to 1982. The data base contains statistics on medium and long term public and private external debt, including data on commitments, disbursements, principal and interest payments, and debt outstanding. Data are classified by debtor country and by type of creditor and are expressed in U.S. dollars at current prices. The data base tape was last updated in May 1984. A published version of the data base is available in World Bank's World Debt Tables.

Social Indicators Time Series (SIDF)	The World Bank's Social Indicators Time Series provides annual social and demographic statistics for about 180 countries for the period 1950 to 1983. In the case of some demographic variables, projections are also available for 1983 to 2000. Variables include population by age, sex and rural-urban residence, vital statistics, social service indicators (including family planning, health, nutrition, education, housing, potable water, and sanitation), income distribution, poverty, energy, and labor force statistics. The World Bank generally uses UN sources for these social data, such as WHO, UNESCO, FAO ILO and UNSO. The data base tape was updated in Sept 1984.

International Monetary Fund

Direction of Trade (DOT)	The IMF's Direction of Trade data base provides annual time-series information for about 160 countries on the value of exports (f.o.b.) and imports (c.i.f.) between a country and its major trading partners. The data are generally available for the period 1950 to 1982 and are expressed in Special Drawing Rights (SDRs) at current prices. The data base tape is updated quarterly and appears in published form in the IMF's annual Direction of Trade Statistics.
Balance of Payments (BOP)	The IMF Balance of Payments data base contains annual time-series data for about 120 countries on balance of payments items, such as merchandise trade, current account, capital account, change in reserves, etc. The statistics are generally available for 1967 to 1982 and are expressed in Special Drawing Rights (SDRs) at current prices. The data base tape is updated quarterly and appears in published form in the IMF's annual Balance of Payments Statistics.

Government Finance Statistics (GFS)	The IMF Government Finance Statistics provides annual time-series data from about 117 countries on central government revenue and expenditures, including total revenue, tax and non-tax revenue, grants, lending minus repayments financing, debt, and expenditures by sector or function. Data are generally available from 1970 to 1982 and are expressed at current prices in local currencies. The data base tape is updated quarterly and appears in published form in the IMF's Government Finance Statistics Yearbook
International Finance Statistics (IFS)	The IMF's International Financial Statistics contains major financial and economic indicators in time-series format on a yearly, quarterly and monthly basis. Indicators include balance of payments, trade and reserves, monetary indices, government finances, production, prices, exchange rates, and interest rates. The annual data are available from 1950 to 1982. The data are expressed at current prices in U.S. dollars. Data base tapes are updated quarterly and appear in published form monthly in the IMF's International Financial Statistics.

U.S. Department of Agriculture

Production (PROD)	USDA (Economic Research Service) gathers agricultural production statistics available on a commodity-by-commodity basis for about 125 countries (also geographic and political regions). The data covers the major commodities (about 65% coverage) produced by each country, including grains, limited fruits and vegetables, oilseeds, animals and major animal products, and other food and agricultural commodities. The data are gathered and adjusted by USDA attaches stationed around the world. Production data are expressed in volume (metric tons) and a value index (in constant U.S. dollars) and are generally available annually (calendar year) from 1950 to 1984. Data base tape updates are provided annually and are available

	(for a shorter time-series) in published form annually in USDA's World Indices of Agricultural and Food Production.
Grain (GRAIN)	The USDA (Economic Research Service) grain data base includes time-series statistics for 109 countries for the major grains such as rice, wheat, corn, rye, barley, oats, sorghum, millet and others. For each grain, information is available on the country's production, area and yield. The data is generally available annually (calendar basis) for 1950 to 1982. Data base tape updates are provided semi-annually.
Food Aid Needs and Availabilities (FANA)	The USDA (Ecnomic Research Service) Food Aid Needs and Availabilities data base provides supply and utilization data on sixty commodities and financial data for 67 countries. The data is annual and includes historical trends and projections for 1977 to 1984. Variables include food production, imports, exports, feed use, total use, domestic supply, food import requirements, financial indicators such as debt and reserves, commercial import capacity and food aid needs. The data base is updated annually and is available in published form annually in the USDA's World Food Aid Needs and Availabilities.
Foreign Agriculture Service (FAS)	The USDA's Foreign Agriculture Service data base includes supply and utilization data for grain, oilseed, animals and major animal products in time-series format. Data is annual (on crop year) and covers 1960-1982 for 120 countries and both political and geographic regions. Variables include area yield, production, inventory, imports, exports, consumption, feed use, and total domestic use. The primary data source is from the FAS attaches in the field, supplemented by FAO and ERS data. The data base tapes are updated annually.

United Nations

Energy (ENERGY)	The United Nations Energy Statistics data base contains data for individual reporting countries and their production and trade of particular commodities in a given year. Commodities include various kinds of coal, peat, coke, and gas. The data covers the period 1950-1982 for approximately 200 countries and is updated annually. In general, most of the information is supplied by the national statistical authorities by means of questionnaires and other officially published sources; where official data is incomplete or inconsistent, estimates are made by the United Nations Statistical Office. The data base is updated annually and is also available in published form in the Energy Statistics Yearbook 1982 (United Nations Statistical Papers Series J. No. 26).
National Accounts	The National Accounts Statistics provides detailed transaction flows in an economy. Data are divided into four parts. Part 1 contains comprehensive summary information. Part 2 contains detailed breakdowns of the final expenditure components of gross domestic product. Part 3 contains detailed institutional sector accounts. Part 4 contains kind of activity breakdowns. The final part contains a breakdown of centrally-planned economies. The data base is available in published form in "Yearbook of National Accounts Statistics, Volume 1 Part 1 Individual Country Data". New York: United Nations.

1970-82

AGENCY FOR INTERNATIONAL DEVELOPMENT

ECONOMIC AND SOCIAL DATABASE

CENTER FOR DEVELOPMENT INFORMATION AND EVALUATION
Evaluation Applications and Statistical Analysis

The following is a list of variables available in the Economic and Social database of CDIE/EASA. The database is maintained on the A.I.D.'s mainframe computer in a SAS database called 'D520.SASDB.HISTORY' in a dataset name called 'ALPHA'. The database can be allocated in TSO by typing:

ALLOC F(hist) DA('D520.SASDB.HISTORY') SHR

The variable list on the next several pages includes a DENUM used to reference the variable, a UNIT code for each measure, and a variable definition called TITLE. The first letter of the DENUM gives a clue to the source of the data (see table below). The UNIT codes are included in a table at the end of the document. All data is available in time-series format including values from 1960 through 1982.

DENUM INITIAL	PUBLISHED SOURCE	ORGANIZATION
G	Government Finance Statistics	IMF
I	International Finance Statistics	IMF
B	Balance of Payment Statistics	IMF
* * * * *		
F	Social Indicators (three points time)	World Bank
S	Social Indicators (all years)	World Bank
D	World Debt	World Bank
W	World Tables	World Bank

DENUM	UNIT	TITLE
B001	1	A. CURRENT ACCOUNT, EXCL. GROUP F
B002	1	MERCHANDISE EXPORTS F.O.B.
B003	1	MERCHANDISE IMPORTS F.O.B.
B004	1	TRADE BALANCE
B005	1	OTHER GOODS, SERVICES, AND INCOME CREDIT
B006	1	TRAVEL CREDIT
B007	1	INVESTMENT INCOME, CREDIT
B008	1	OTHER CREDIT ITEMS
B009	1	OTHER GOODS, SERVICES, AND INCOME DEBIT
B010	1	INVESTMENT INCOME, DEBIT
B011	1	OTHER DEBIT ITEMS
B012	1	TOTAL: GOODS, SERVICES AND INCOME
B013	1	PRIVATE UNREQUITED TRANSFERS
B014	1	TOTAL: EXCL. OFFICIAL UNREQUITED TRANSFERS
B015	1	OFFICIAL UNREQUITED TRANSFERS
B016	1	B. DIRECT INVESTMENT AND OTHER LONG-TERM CAPITAL,EXCL. GROUPS F THRU H
B017	1	DIRECT INVESTMENT
B018	1	PORTFOLIO INVESTMENT
B019	1	RESIDENT OFFICIAL SECTOR
B020	1	DEPOSIT MONEY BANKS
B021	1	OTHER SECTORS, LONG-TERM CAPITAL
B022	1	TOTAL, GROUPS A PLUS B
B023	1	C. OTHER SHORT-TERM CAPITAL, EXCL. GROUPS F THROUGH H
B024	1	RESIDENT OFFICIAL SECTOR
B025	1	DEPOSIT MONEY BANKS
B026	1	OTHER SECTORS, SHORT-TERM CAPITAL
B027	1	D. NET ERRORS AND OMISSIONS
B028	1	TOTAL, GROUPS A THROUGH D
B029	1	E. COUNTERPART ITEMS
B030	1	MONETIZATION/DEMONETIZATION OF GOLD
B031	1	ALLOCATION/CANCELLATION OF SDRS
B032	1	VALUATION CHANGES IN RESERVES
B033	1	TOTAL, GROUPS A THROUGH E
B034	1	F. EXCEPTIONAL FINANCING
B035	1	TOTAL, GROUPS A THROUGH F
B036	1	G. LIABILITIES CONSTITUTING FOREIGN AUTHORITIES RESERVES
B037	1	TOTAL GROUPS A THROUGH G
B038	1	H. TOTAL CHANGE IN RESERVES
B039	1	MONETARY GOLD
B040	1	SDR SPECIAL DRAWING RIGHTS
B041	1	RESERVE POSITION IN THE FUND
B042	1	FOREIGN EXCHANGE ASSETS
B043	1	OTHER CLAIMS
B044	1	USE OF FUND CREDIT, IN SDRS
D001	2	IBRD (PUBLIC DEBT) OUTSTANDING DISBURSED ONLY
D002	2	IDA (PUBLIC DEBT) OUTSTANDING DISBURSED ONLY
D003	2	OTHER MULTILATERAL (PUBLIC DEBT) OUTSTANDING DISBURSED ONLY
D004	2	BILATERAL (PUBLIC DEBT) OUTSTANDING DISBURSED ONLY
D005	2	SUPPLIERS (PUBLIC DEBT) OUTSTANDING DISBURSED ONLY

DENUM	UNIT	TITLE
D006	2	FINANCIAL INSTITUTIONS (PUBLIC DEBT) OUTSTANDING DISBURSED ONLY
D007	2	BONDS (PUBLIC DEBT) OUTSTANDING DISBURSED ONLY
D008	2	OTHER PRIVATE CREDIT (PUBLIC DEBT) OUTSTANDING DISBURSED ONLY
D009	2	IBRD (PUBLIC DEBT) OUTSTANDING INCL. UNDISBURSED
D010	2	IDA (PUBLIC DEBT) OUTSTANDING INCL. UNDISBURSED
D011	2	OTHER MULTILATERAL (PUBLIC DEBT) OUTSTANDING INCL. UNDISBURSED
D012	2	BILATERAL (PUBLIC DEBT) OUTSTANDING INCL. UNDISBURSED
D013	2	SUPPLIERS (PUBLIC DEBT) OUTSTANDING INCL. UNDISBURSED
D014	2	FINANCIAL INSTITUTIONS (PUBLIC DEBT) OUTSTANDING INCL. UNDISBURSED
D015	2	BONDS (PUBLIC DEBT) OUTSTANDING INCL. UNDISBURSED
D016	2	OTHER PRIVATE CREDIT (PUBLIC DEBT) OUTSTANDING INCL. UNDISBURSED
D017	2	IBRD (PUBLIC DEBT) COMMITMENTS
D018	2	IDA (PUBLIC DEBT) COMMITMENTS
D019	2	OTHER MULTILATERAL (PUBLIC DEBT) COMMITMENTS
D020	2	BILATERAL (PUBLIC DEBT) COMMITMENTS
D021	2	SUPPLIERS (PUBLIC DEBT) COMMITMENTS
D022	2	FINANCIAL INSTITUTIONS (PUBLIC DEBT) COMMITMENTS
D023	2	BONDS (PUBLIC DEBT) COMMITMENTS
D024	2	OTHER PRIVATE CREDIT (PUBLIC DEBT) COMMITMENTS
D025	2	IBRD (PUBLIC DEBT) DISBURSEMENTS
D026	2	IDA (PUBLIC DEBT) DISBURSEMENTS
D027	2	OTHER MULTILATERAL (PUBLIC DEBT) DISBURSEMENTS
D028	2	BILATERAL (PUBLIC DEBT) DISBURSEMENTS
D029	2	SUPPLIERS (PUBLIC DEBT) DISBURSEMENTS
D030	2	FINANCIAL INSTITUTIONS (PUBLIC DEBT) DISBURSEMENTS
D031	2	BONDS (PUBLIC DEBT) DISBURSEMENTS
D032	2	OTHER PRIVATE CREDIT (PUBLIC DEBT) DISBURSEMENTS
D033	2	IBRD (PUBLIC DEBT) PRINCIPAL REPAYMENTS
D034	2	IDA (PUBLIC DEBT) PRINCIPAL REPAYMENTS
D035	2	OTHER MULTILATERAL (PUBLIC DEBT) PRINCIPAL REPAYMENTS
D036	2	BILATERAL (PUBLIC DEBT) PRINCIPAL REPAYMENTS
D037	2	SUPPLIERS (PUBLIC DEBT) PRINCIPAL REPAYMENTS
D038	2	FINANCIAL INSTITUTIONS (PUBLIC DEBT) PRINCIPAL REPAYMENTS
D039	2	BONDS (PUBLIC DEBT) PRINCIPAL REPAYMENTS
D040	2	OTHER PRIVATE CREDIT (PUBLIC DEBT) PRINCIPAL REPAYMENTS
D041	2	IBRD (PUBLIC DEBT) INTEREST PAYMENTS
D042	2	IDA (PUBLIC DEBT) INTEREST PAYMENTS
D043	2	OTHER MULTILATERAL (PUBLIC DEBT) INTEREST PAYMENTS
D044	2	BILATERAL (PUBLIC DEBT) INTEREST PAYMENTS
D045	2	SUPPLIERS (PUBLIC DEBT) INTEREST PAYMENTS
D046	2	FINANCIAL INSTITUTIONS (PUBLIC DEBT) INTEREST PAYMENTS
D047	2	BONDS (PUBLIC DEBT) INTEREST PAYMENTS
D048	2	OTHER PRIVATE CREDIT (PUBLIC DEBT) INTEREST PAYMENTS
D049	2	TOTAL OFFICIAL CREDITORS (PUBLIC DEBT) WEIGHTED INTEREST RATE
D050	2	TOTAL PRIVATE CREDITORS (PUBLIC DEBT) WEIGHTED INTEREST RATE
D051	2	TOTAL OFFICIAL CREDITORS (PUBLIC DEBT) WEIGHTED MATURITY
D052	2	TOTAL PRIVATE CREDITORS (PUBLIC DEBT) WEIGHTED MATURITY
D053	2	TOTAL OFFICIAL CREDITORS (PUBLIC DEBT) WEIGHTED GRACE PERIOD
D054	2	TOTAL PRIVATE CREDITORS (PUBLIC DEBT) WEIGHTED GRACE PERIOD

DENUM	UNIT	TITLE
D055	2	TOTAL OFFICIAL CREDITORS (PUBLIC DEBT) WEIGHTED GRANT ELEMENT
D056	2	TOTAL PRIVATE CREDITORS (PUBLIC DEBT) WEIGHTED GRANT ELEMENT
D057	2	TOTAL ALL CREDITORS (PUBLIC DEBT) CANCELLATIONS
D070	2	TOTAL ALL CREDITORS (PUBLIC DEBT) DISBURSED CONCESSIONAL DEBT OUTSTANDING
D073	2	TOTAL OFFICIAL CREDITORS (PUBLIC DEBT) COMMITMENTS @ KNOWN TERMS
D074	2	TOTAL PRIVATE CREDITORS (PUBLIC DEBT) COMMITMENTS @ KNOWN TERMS
D075	2	TOTAL ALL CREDITORS (PUBLIC DEBT) VARIABLE INTEREST RATE DEBT
D081	2	SUPPLIERS (PRIVATE DEBT) DISBURSED DEBT OUTSTANDING
D082	2	FINANCIAL INSTITUTIONS (PRIVATE DEBT) DISBURSED, DEBT OUTSTANDING
D083	2	TOTAL OFFICIAL CREDITORS (PRIVATE DEBT) DISBURSED DEBT OUTSTANDING
D084	2	FOREIGN PARENT COMPANY (PRIVATE DEBT) DISBURSED DEBT OUTSTANDING
D085	2	SUPPLIERS (PRIVATE DEBT) DISBURSED
D086	2	FINANCIAL INSTITUTIONS (PRIVATE DEBT) DISBURSED
D087	2	TOTAL OFFICIAL CREDITORS (PRIVATE DEBT) DISBURSED
D088	2	FOREIGN PARENT COMPANY (PRIVATE DEBT) DISBURSED
D089	2	SUPPLIERS (PRIVATE DEBT) DISBURSED, PRINCIPAL REPAYMENT
D090	2	FINANCIAL INSTITUTIONS (PRIVATE DEBT) DISBURSED, PRINCIPAL REPAYMENT
D091	2	TOTAL OFFICIAL CREDITORS (PRIVATE DEBT) DISBURSED, PRINCIPAL REPAYMENT
D092	2	FOREIGN PARENT CO. (PRIVATE DEBT) DISBURSED PRINCIPAL REPAYMENT
D093	2	SUPPLIERS (PRIVATE DEBT) DISBURSED INTEREST PAYMENTS
D094	2	FINANCIAL INSTITUTIONS (PRIVATE DEBT) DISBURSED INTEREST PAYMENTS
D095	2	TOTAL OFFICIAL CREDITORS (PRIVATE DEBT) DISBURSED INTEREST PAYMENTS
D096	2	FOREIGN PARENT COMPANY (PRIVATE DEBT) DISBURSED INTEREST PAYMENTS
D101	2	TOTAL PRIVATE CREDITORS (PRIVATE DEBT) DEBT OUTSTANDING DISBURSED
D102	2	TOTAL ALL CREDITORS (PRIVATE DEBT) DEBT OUTSTANDING DISBURSED
D103	2	TOTAL PRIVATE CREDITORS (PRIVATE DEBT) DISBURSEMENTS
D104	2	TOTAL ALL CREDITORS (PRIVATE DEBT) DISBURSEMENTS
D105	2	TOTAL PRIVATE CREDITORS (PRIVATE DEBT) PRINCIPAL REPAYMENTS
D106	2	TOTAL ALL CREDITORS (PRIVATE DEBT) PRINCIPAL REPAYMENTS
D107	2	TOTAL PRIVATE CREDITORS (PRIVATE DEBT) INTEREST PAYMENTS
D108	2	TOTAL ALL CREDITORS (PRIVATE DEBT) INTEREST PAYMENTS
F001	3	LAND AREA
F002	3	AGRICULTURAL LAND AREA
F003	2	GNP PER CAPITA (ATLAS)
F004	4	ENERGY CONSUMPTION PER CAPITA
F005	.	POPULATION, MID YEAR
F006	.	URBAN POPULATION (% OF TOTAL)
F007	.	POPULATION IN THE YEAR 2000 (MILLIONS ??)
F008	.	STATIONARY POPULATION (MILLIONS ??)
F009	.	YEAR STATIONARY POPULATION IS REACHED
F010	.	POPULATION DENSITY PER SQUARE KILOMETER OF TOTAL LAND AREA
F011	.	POPULATION DENSITY PER SQUARE KILOMETER OF AGRICULTURAL LAND
F012	.	POPULATION AGE STRUCTURE (% 0-14 YEARS)
F013	.	POPULATION AGE STRUCTURE (% 15-64 YEARS)
F014	.	POPULATION AGE STRUCTURE (%65 YEARS AND OVER)
F015	.	ANNUAL GROWTH RATE OF TOTAL POPULATION OVER DECADE
F016	.	ANNUAL GROWTH RATE OF URBAN POPULATION OVER DECADE
F017	.	CRUDE BIRTH RATE (PER THOUSAND POPULATION)
F018	.	CRUDE DEATH RATE (PER THOUSAND POPULATION)

DENUM	UNIT	TITLE
F019	.	GROSS REPRODUCTION RATE
F020	.	FAMILY PLANNING ACCEPTORS, ANNUAL
F021	.	FAMILY PLANNING USERS (% OF MARRIED WOMEN AGES 15-44)
F022	.	INDEX OF FOOD PRODUCTION PER CAPITA (1969-71=100)
F023	.	PER CAPITA SUPPLY OF CALORIES AS % OF REQUIREMENT
F024	5	DAILY PER CAPITA SUPPLY OF PROTEINS - TOTAL
F025	5	DAILY PER CAPITA SUPPLY OF PROTEINS - ANIMAL & PULSE
F026	.	CHILD (AGES 1-4) DEATH RATE (PER THOUSAND CHILDREN)
F027	6	LIFE EXPECTANCY AT BIRTH
F028	.	INFANT MORTALITY RATE (PER THOUSAND LIVE BIRTHS)
F029	.	ACCESS TO SAFE WATER (% OF POPULATION) TOTAL
F030	.	ACCESS TO SAFE WATER (% OF POPULATION) URBAN
F031	.	ACCESS TO SAFE WATER (% OF POPULATION) RURAL
F032	.	ACCESS TO EXCRETA DISPOSAL (% OF POPULATION) TOTAL
F033	.	ACCESS TO EXCRETA DISPOSAL (% OF POPULATION) URBAN
F034	.	ACCESS TO EXCRETA DISPOSAL (% OF POPULATION) RURAL
F035	.	POPULATION PER PHYSICIAN
F036	.	POPULATION PER NURSING PERSONNEL
F037	.	POPULATION PER HOSPITAL BED-TOTAL
F038	.	POPULATION PER HOSPITAL BED-URBAN
F039	.	POPULATION PER HOSPITAL BED-RURAL
F040	.	ADMISSIONS PER HOSPITAL BED
F041	.	AVERAGE SIZE OF HOUSEHOLD -TOTAL
F042	.	AVERAGE SIZE OF HOUSEHOLD -URBAN
F043	.	AVERAGE SIZE OF HOUSEHOLD -RURAL
F044	.	AVERAGE NUMBER OF PERSONS PER ROOM -TOTAL
F045	.	AVERAGE NUMBER OF PERSONS PER ROOM -URBAN
F046	.	AVERAGE NUMBER OF PERSONS PER ROOM -RURAL
F047	.	ACCESS TO ELECTRICITY (% OF DWELLINGS) TOTAL
F048	.	ACCESS TO ELECTRICITY (% OF DWELLINGS) URBAN
F049	.	ACCESS TO ELECTRICITY (% OF DWELLINGS) RURAL
F050	.	ADJUSTED ENROLLMENT RATIO, PRIMARY TOTAL
F051	.	ADJUSTED ENROLLMENT RATIO, PRIMARY MALE
F052	.	ADJUSTED ENROLLMENT RATIO, PRIMARY FEMALE
F053	.	ADJUSTED ENROLLMENT RATIO, SECONDARY TOTAL
F054	.	ADJUSTED ENROLLMENT RATIO, SECONDARY MALE
F055	.	ADJUSTED ENROLLMENT RATIO, SECONDARY FEMALE
F056	.	VOCATIONAL ENROLLMENT AS % OF SECONDARY
F057	.	PUPIL TEACHER RATIO, PRIMARY
F058	.	PUPIL TEACHER RATIO, SECONDARY
F059	.	ADULT LITERACY RATE (% OF POPULATION 15 YEARS & OVER)
F060	.	PASSENGER CARS PER THOUSAND POPULATION
F061	.	RADIO RECEIVERS PER THOUSAND POPULATION
F062	.	TV RECEIVERS PER THOUSAND POPULATION
F063	.	NEWSPAPER CIRCULATION PER THOUSAND POPULATION
F064	.	CINEMA ANNUAL ATTENDANCE PER CAPITA
F065	.	TOTAL LABOR FORCE
F066	.	% LABOR FORCE FEMALE
F067	.	% LABOR FORCE AGRICULTURE

DENUM	UNIT	TITLE
F068	.	% LABOR FORCE INDUSTRY
F069	.	% LABOR FORCE PARTICIPATION RATE TOTAL
F070	.	% LABOR FORCE PARTICIPATION RATE MALE
F071	.	% LABOR FORCE PARTICIPATION RATE FEMALE
F072	.	ECONOMIC DEPENDENCY RATIO
F073	.	% OF PRIVATE INCOME RECIEVED BY HIGHEST 5% OF HOUSEHOLD
F074	.	% OF PRIVATE INCOME RECIEVED BY HIGHEST 20% OF HOUSEHOLD
F075	.	% OF PRIVATE INCOME RECIEVED BY LOWEST 20% OF HOUSEHOLD
F076	.	% OF PRIVATE INCOME RECIEVED BY LOWEST 40% OF HOUSEHOLD
F077	2	ABSOLUTE POVERTY INCOME LEVEL PER CAPITA - URBAN
F078	2	ABSOLUTE POVERTY INCOME LEVEL PER CAPITA - RURAL
F079	2	RELATIVE POVERTY INCOME LEVEL PER CAPITA - URBAN
F080	2	RELATIVE POVERTY INCOME LEVEL PER CAPITA - RURAL
F081	.	% POPULATION BELOW ABSOLUTE POVERTY INCOME LEVEL - URBAN
F082	.	% POPULATION BELOW ABSOLUTE POVERTY INCOME LEVEL - RURAL
G001	7	TOTAL REVENUE AND GRANTS
G002	7	TOTAL REVENUE
G003	7	CURRENT REVENUE
G004	7	TAX REVENUE
G005	7	NONTAX REVENUE
G006	7	CAPITAL REVENUE
G007	7	GRANTS
G008	7	CURRENT GRANTS
G009	7	CAPITAL GRANTS
G010	7	TOTAL EXPENDITURE AND LENDING MINUS REPYMNT
G011	7	TOTAL EXPENDITURE
G012	7	CURRENT EXPENDITURE
G013	7	CAPITAL EXPENDITURE
G014	7	LENDING MINUS REPAYMENTS
G015	7	CURRENT ACCOUNT SURPLUS OF SAVING (WITHOUT GRANTS)
G016	7	GROSS FIXED CAPITAL FORMATION
G017	7	GROSS CAPITAL FORMATION
G018	7	OVER-ALL DEFICIT/SURPLUS
G019	7	FINANCING
G020	7	FINANCING, ABROAD
G021	7	FINANCING, DOMESTIC
G022	7	DOMESTIC FINANCING, NONBANK
G023	7	DOMESTIC FINANCING, DEPOSIT MONEY BANKS
G024	7	DOMESTIC FINANCING, MONETARY AUTHORITIES
G025	7	GOVERNMENT DEBT OUTSTANDING
G026	7	CHANGE IN FLOATING DEBT
G027	7	DOMESTIC AMORTIZATION
G028	7	AMORTIZATION ABROAD
G029	7	SOCIAL SECURITY FUNDS FINANCING OF OTHER CENTRAL GOVERNMENT
G030	7	GENERAL PUBLIC SERVICES
G031	7	DEFENSE
G032	7	EDUCATION
G033	7	SCHOOLS (PRIMARY & SECONDARY)
G034	7	UNIVERSITIES AND COLLEGES

DENUM	UNIT	TITLE
G035	7	OTHER EDUCATION
G036	7	HEALTH
G037	7	HOSPITALS AND CLINICS
G038	7	INDIVIDUAL HEALTH SERVICES
G039	7	OTHER HEALTH
G040	7	SOCIAL SECURITY AND WELFARE
G041	7	SOCIAL SECURITY AND ASSISTANCE
G042	7	WELFARE
G043	7	HOUSING AND COMMUNITY AMENITIES
G044	7	HOUSING
G045	7	COMMUNITY DEVELOPMENT
G046	7	SANITARY SERVICES
G047	7	OTHER COMMUNITY AND SOCIAL SERVICES
G048	7	ECONOMIC SERVICES
G049	7	GENERAL ADMIN., REGULATION, AND RESEARCH
G050	7	AGRICULTURE, FORESTRY, FISHING AND HUNTING
G051	7	MINING, MANUFACTURING, AND CONSTRUCTION
G052	7	ELECTRICITY, GAS, STEAM AND WATER
G053	7	ROADS
G054	7	INLAND AND COASTAL WATERWAYS
G055	7	OTHER TRANSPORTATION AND COMMUNICATION
G056	7	OTHER TRANSPORTATION
G057	7	OTHER COMMUNICATION
G058	7	OTHER ECONOMIC SERVICES
G059	7	OTHER PURPOSES
G101	7	TOTAL REVENUE AND GRANTS
G102	7	TOTAL REVENUE
G103	7	CURRENT REVENUE
G104	7	TAX REVENUE
G105	7	NONTAX REVENUE
G106	7	CAPITAL REVENUE
G107	7	GRANTS
G108	7	CURRENT GRANTS
G109	7	CAPITAL GRANTS
G110	7	TOTAL EXPENDITURE AND LENDING MINUS REPYMNT
G111	7	TOTAL EXPENDITURE
G112	7	CURRENT EXPENDITURE
G113	7	CAPITAL EXPENDITURE
G114	7	LENDING MINUS REPAYMENTS
G115	7	CURRENT ACCOUNT SURPLUS OF SAVING (WITHOUT GRANTS)
G116	7	GROSS FIXED CAPITAL FORMATION
G117	7	GROSS CAPITAL FORMATION
G118	7	OVER-ALL DEFICIT/SURPLUS
G119	7	FINANCING
G120	7	FINANCING, ABROAD
G121	7	FINANCING, DOMESTIC
G122	7	DOMESTIC FINANCING, NONBANK
G123	7	DOMESTIC FINANCING, DEPOSIT MONEY BANKS
G124	7	DOMESTIC FINANCING, MONETARY AUTHORITIES

DENUM	UNIT	TITLE
G125	7	GOVERNMENT DEBT OUTSTANDING
G126	7	CHANGE IN FLOATING DEBT
G127	7	DOMESTIC AMORTIZATION
G128	7	AMORTIZATION ABROAD
G129	7	SOCIAL SECURITY FUNDS FINANCING OF OTHER CENTRAL GOVERNMENT
G130	7	GENERAL PUBLIC SERVICES
G131	7	DEFENSE
G132	7	EDUCATION
G133	7	SCHOOLS (PRIMARY & SECONDARY)
G134	7	UNIVERSITIES AND COLLEGES
G135	7	OTHER EDUCATION
G136	7	HEALTH
G137	7	HOSPITALS AND CLINICS
G138	7	INDIVIDUAL HEALTH SERVICES
G139	7	OTHER HEALTH
G140	7	SOCIAL SECURITY AND WELFARE
G141	7	SOCIAL SECURITY AND ASSISTANCE
G142	7	WELFARE
G143	7	HOUSING AND COMMUNITY AMENITIES
G144	7	HOUSING
G145	7	COMMUNITY DEVELOPMENT
G146	7	SANITARY SERVICES
G147	7	OTHER COMMUNITY AND SOCIAL SERVICES
G148	7	ECONOMIC SERVICES
G149	7	GENERAL ADMINISTRATION, REGULATION, AND RESEARCH
G150	7	AGRICULTURE, FORESTRY, FISHING AND HUNTING
G151	7	MINING, MANUFACTURING, AND CONSTRUCTION
G152	7	ELECTRICITY, GAS, STEAM AND WATER
G153	7	ROADS
G154	7	INLAND AND COASTAL WATERWAYS
G155	7	OTHER TRANSPORTATION AND COMMUNICATION
G156	7	OTHER TRANSPORTATION
G157	7	OTHER COMMUNICATION
G158	7	OTHER ECONOMIC SERVICES
G159	7	OTHER PURPOSES
I001	17	AA LOCAL CURRENCY PER SDR, END OF PERIOD MARKET RATE
I002	17	AC SDR PER LOCAL CURRENCY, END OF PERIOD MARKET RATE
I003	17	RB LOCAL CURRENCY PER SDR, PERIOD AVERAGE, PAR RATE
I004	17	RD SDR PER LOCAL CURRENCY, PERIOD AVERAGE, PAR RATE
I005	17	AE LOCAL CURRENCY PER US$, END OF PERIOD MARKET RATE
I006	17	DE LOCAL CURRENCY PER US$, END OF PERIOD, PAR RATE
I007	17	AG US$ PER LOCAL CURRENCY, END OF PERIOD, MARKET RATE
I008	17	DG US$ PER LOCAL CURRENCY, END OF PERIOD, PAR RATE
I009	17	AH US$ PER LOCAL CURRENCY, PERIOD AVERAGE, MARKET RATE
I010	17	RH US$ PER LOCAL CURRENCY, PERIOD AVERAGE, PAR RATE
I011	17	AF LOCAL CURRENCY PER US$, PERIOD AVERAGE, MARKET RATE
I012	17	RF LOCAL CURRENCY PER US$, PERIOD AVERAGE, PAR RATE
I013	17	SA US$ PER SDR, END OF PERIOD
I014	17	SB US$ PER SDR, PERIOD AVERAGE

DENUM	UNIT	TITLE	
I015	17	SC	SDR PER US$, END OF PERIOD
I016	17	SD	SDR PER US$, PERIOD AVERAGE
I017	2	LAND	GOLD HOLDINGS AT NATIONAL VALUATION
I019	2	2E.D	USE OF FUND CREDIT
I022	1	1B.S	FUND POSITION
I023	2	1B.D	FUND POSITION
I024	1	1C.S	RESERVE POSITION IN FUND
I025	2	1C.D	RESERVE POSITION IN FUND
I026	1	1D.S	FOREIGN EXCHANGE
I027	2	1D.D	FOREIGN EXCHANGE
I028	1	1L.S	TOTAL RESERVES MINUS GOLD
I029	2	1L.D	TOTAL RESERVES MINUS GOLD
I030	2	1AD	GOLD (TROY OUNCES)
I031	1	1..S	TOTAL RESERVES (GOLD AT SDR 35/OZ)
I033	2	7X.D	DEPOSIT BANK FOREIGN ASSETS
I034	2	7Y.D	DEPOSIT BANK FOREIGN LIABILITIES
I035	.	60	CENTRAL BANK DISCOUNT RATE, END OF PERIOD, % PER ANNUM
I036	.	60A	CENTRAL BANK DISCOUNT RATE, END OF PERIOD, % PER ANNUM
I037	.	60B	CENTRAL BANK DISCOUNT RATE, END OF PERIOD, % PER ANNUM
I038	.	60C	TREASURY BILL RATE
I039	.	60BS	PRIVATE BILL RATE (FRANCE,JAPAN,GERMANY)
I040	.	60CS	UK: TREASURY BILL RATE (BOND EQUIVALENT)
I041	.	61	BOND YIELDS, % PER ANNUM
I042	15	62	SHARE PRICES
I043	15	63	WHOLESALE PRICES
I044	15	64	CONSUMER PRICES
I046	.	64..X	PERCENTAGE CHANGE IN CPI OVER PREVIOUS YEAR
I047	15	65	WAGES
I049	15	66	PRODUCTION, ALL INDUSTRIES
I050	15	66AA	PRODUCTION, CRUDE PETROLEUM
I051	15	66AB	PRODUCTION, REFINED PETROLEUM
I055	2	34	MONEY SUPPLY
I056	.	34..X	PERCENTAGE CHANGE IN MONEY SUPPLY OVER PREVIOUS YEAR
I057	2	32	DOMESTIC CREDIT
I058	2	32D	CREDIT: CLAIMS ON PRIVATE SECTOR
I059	7	70	EXPORTS
I060	7	71	IMPORTS
I061	9	70..D	EXPORTS
I062	9	71..D	IMPORTS
I063	15	72	EXPORT VOLUME
I064	15	73	IMPORT VOLUME
I065	15	74	EXPORT UNIT VALUE
I066	16	74..D	EXPORT UNIT VALUE
I067	16	75..D	IMPORT UNIT VALUE
I068	15	75	IMPORT UNIT VALUE
I069	15	76	EXPORT PRICES
I070	15	76.X	IMPORT PRICES
I071	7	70AA	EXPORT CRUDE PETROLEUM
I072	7	71AA	IMPORT CRUDE PERTOLEUM

DENUM	UNIT	TITLE	
I073	9	70AAD	EXPORT CRUDE PETROLEUM
I074	9	71AAD	IMPORT CRUDE PETROLEUM
I075	15	72AA	EXPORT VOLUME, CRUDE PETROLEUM
I076	15	73AA	IMPORT VOLUME, CRUDE PETROLEUM
I077	15	74AA	EXPORT UNIT VALUE, CRUDE PETROLEUM
I080	16	76AAZ	WHOLESALE PRICE, CRUDE PETROLEUM
I081	16	76AAD	WHOLESALE PRICES, CRUDE PETROLEUM
I082	7	70VR	EXPORT, COAL
I086	15	72VR	EXPORT VOLUME
I088	15	74VR	EXPORT UNIT VALUE
I093	16	76VRD	WHOLESALE PRICES, CRUDE PETROLEUM
I094	7	70AB	EXPORT, REFINED PETROLEUM
I095	7	71AB	IMPORT, REFINED PETROLEUM
I096	9	70ABD	EXPORT, REFINED PETROLEUM
I098	15	72AB	EXPORT VOLUME, REFINED PETROLEUM
I100	15	74AB	EXPORT UNIT VALUE, REFINED PETROLEUM
I106	7	70A	EXPORT, PETROLEUM
I107	7	71A	IMPORT, PETROLEUM
I108	9	70A.D	EXPORT, PETROLEUM
I109	9	71A.D	IMPORT, PETROLEUM
I110	15	72A	EXPORT VOLUME, PETROLEUM
I112	15	74A	EXPORT UNIT VALUE, PETROLEUM
I118	7	70B	EXPORT, NATURAL GAS
I120	9	70B.D	EXPORT, NATURAL GAS
I122	15	72B	EXPORT VOLUME, NATURAL GAS
I126	16	74B.D	EXPORT UNIT VALUE, NATURAL GAS
I130	7	99A	GNP (GROSS NATIONAL EXPENDITURE - IFS USAGE)
I131	7	99E	NATIONAL INCOME
I132	7	99B	GDP
I133	12	99B.P	GDP
I134	16	74AAD	EXPORT UNIT VALUE, CRUDE PETROLEUM
S001	.	POPULATION (MID-YEAR) TOTAL	
S002	.	POPULATION (MID-YEAR) MALE	
S003	.	POPULATION (MID-YEAR) FEMALE	
S004	.	POPULATION (MID-YEAR) URBAN	
S005	.	POPULATION (MID-YEAR) RURAL	
S006	.	POPULATION TOTAL AGE 0-14	
S007	.	POPULATION TOTAL AGE 15-64	
S008	.	POPULATION TOTAL AGE 65 AND OVER	
S009	.	POPULATION MALE AGE 0-14	
S010	.	POPULATION MALE AGE 15-64	
S011	.	POPULATION MALE AGE 65 AND OVER	
S012	.	POPULATION FEMALE AGE 0-14	
S013	.	POPULATION FEMALE AGE 15-64	
S014	.	POPULATION FEMALE AGE 65 AND OVER	
S016	.	POPULATION TOTAL AGE 12-17	
S017	.	POPULATION TOTAL AGE 18-23	
S018	.	POPULATION MALE AGE 6-11	
S019	.	POPULATION MALE AGE 12-17	

DENUM	UNIT	TITLE
S020	.	POPULATION MALE AGE 18-23
S021	.	POPULATION FEMALE AGE 6-11
S022	.	POPULATION FEMALE AGE 12-17
S023	.	POPULATION FEMALE AGE 18-23
S024	.	% URBAN POPULATION IN TOTAL
S025	.	CRUDE BIRTH RATE (PER THOUSAND POPULATION)
S026	.	TOTAL FERTILITY RATE
S027	.	GROSS REPRODUCTION RATE
S029	.	FAMILY PLANNING ACCEPTORS, ANNUAL
S030	.	FAMILY PLANNING USERS AS % OF MARRIED WOMEN AGES 15-44
S031	.	CRUDE DEATH RATE (PER THOUSAND POPULATION)
S032	.	INFANT MORTALITY RATE (PER THOUSAND LIVE BIRTHS)
S033	.	CHILD MORTALITY RATE (DEATHS PER THOUSAND CHILDREN AGES 1-4)
S034	6	LIFE EXPECTANCY AT BIRTH, TOTAL
S035	6	LIFE EXPECTANCY AT BIRTH, MALE
S036	6	LIFE EXPECTANCY AT BIRTH, FEMALE
S037	.	NUMBER OF HOUSEHOLDS TOTAL
S040	.	AVERAGE NUMBER OF PERSONS PER HOUSHOLD, TOTAL
S041	.	AVERAGE NUMBER OF PERSONS PER HOUSHOLD, URBAN
S042	.	AVERAGE NUMBER OF PERSONS PER HOUSHOLD, RURAL
S043	3	AREA - TOTAL
S044	3	AGRICULTURAL LAND - TOTAL
S045	3	AGRICULTURAL LAND - ARABLE
S046	3	AGRICULTURAL LAND - PERMANENT CROPS
S047	3	AGRICULTURAL LAND - PERMANENT MEADOWS & PASTURES
S048	2	GNP (ATLAS)
S049	2	GNP PER CAPITA (ATLAS)
S050	.	% OF PRIVATE INCOME GOING TO LOWEST 10 % OF HOUSEHOLDS
S051	.	% OF PRIVATE INCOME GOING TO 2ND 10 % OF HOUSEHOLDS
S052	.	% OF PRIVATE INCOME GOING TO 3RD 10 % OF HOUSEHOLDS
S053	.	% OF PRIVATE INCOME GOING TO 4TH 10 % OF HOUSEHOLDS
S054	.	% OF PRIVATE INCOME GOING TO 5TH 10 % OF HOUSEHOLDS
S055	.	% OF PRIVATE INCOME GOING TO 6TH 10 % OF HOUSEHOLDS
S056	.	% OF PRIVATE INCOME GOING TO 7TH 10 % OF HOUSEHOLDS
S057	.	% OF PRIVATE INCOME GOING TO 8TH 10 % OF HOUSEHOLDS
S058	.	% OF PRIVATE INCOME GOING TO 9TH 10 % OF HOUSEHOLDS
S059	.	% OF PRIVATE INCOME GOING TO HIGHEST 10 % OF HOUSEHOLDS
S060	.	% OF PRIVATE INCOME GOING TO HIGHEST 5 % OF HOUSEHOLDS
S061	.	% OF PRIVATE INCOME GOING TO HIGHEST 20 % OF HOUSEHOLDS
S062	.	% OF PRIVATE INCOME GOING TO LOWEST 20 % OF HOUSEHOLDS
S063	.	% OF PRIVATE INCOME GOING TO LOWEST 40 % OF HOUSEHOLDS
S071	2	ABSOLUTE POVERTY INCOME LEVEL PER CAPITA - URBAN
S072	2	ABSOLUTE POVERTY INCOME LEVEL PER CAPITA - RURAL
S074	2	RELATIVE POVERTY INCOME LEVEL PER CAPITA - URBAN
S075	2	RELATIVE POVERTY INCOME LEVEL PER CAPITA - RURAL
S077	.	% OF POPULATION BELOW ABSOLUTE POVERTY LEVEL URBAN
S078	.	% OF POPULATION BELOW ABSOLUTE POVERTY LEVEL RURAL
S082	8	ENERGY CONSUMPTION - TOTAL
S083	8	ENERGY CONSUMPTION - SOLID FUELS

DENUM	UNIT	TITLE
S084	8	ENERGY CONSUMPTION - LIQUID FUEL
S085	8	ENERGY CONSUMPTION - NATURAL GAS
S086	8	ENERGY CONSUMPTION - PRIMARY ELECTRICAL
S087	8	ENERGY PRODUCTION - TOTAL
S088	18	FOOD PRODUCTION PER CAPITA
S089	.	DAILY CALORIE SUPPLY PER CAPITA - TOTAL
S090	.	DAILY CALORIE SUPPLY PER CAPITA - CEREALS
S091	.	DAILY CALORIE SUPPLY PER CAPITA - VEGETABLE PRODUCTION
S092	.	DAILY CALORIE SUPPLY PER CAPITA - ANIMAL PRODUCTION
S093	5	DAILY PROTEIN SUPPLY PER CAPITA - TOTAL
S094	5	DAILY PROTEIN SUPPLY PER CAPITA - PULSES
S095	5	DAILY PROTEIN SUPPLY PER CAPITA - VEGETABLE PRODUCTION
S096	5	DAILY PROTEIN SUPPLY PER CAPITA - ANIMAL PRODUCTION
S097	.	FAO POPULATION FOR CALORIE & PROTEIN
S098	.	ACCESS ELECTRICITY - TOTAL (% OF DWELLINGS)
S099	.	ACCESS ELECTRICITY - URBAN (% OF DWELLINGS)
S100	.	ACCESS ELECTRICITY - RURAL (% OF DWELLINGS)
S101	.	ACCESS SAFE WATER - TOTAL (PER HUNDRED PERSONS)
S102	.	ACCESS SAFE WATER - URBAN (PER HUNDRED PERSONS)
S103	.	ACCESS SAFE WATER - RURAL (PER HUNDRED PERSONS)
S104	.	ACCESS EXCRETA DISPOSAL - TOTAL (PER HUNDRED PERSONS)
S105	.	ACCESS EXCRETA DISPOSAL - URBAN (PER HUNDRED PERSONS)
S106	.	ACCESS EXCRETA DISPOSAL - RURAL (PER HUNDRED PERSONS)
S107	.	AVERAGE NUMBER OF PERSONS PER ROOM TOTAL
S108	.	AVERAGE NUMBER OF PERSONS PER ROOM URBAN
S109	.	AVERAGE NUMBER OF PERSONS PER ROOM RURAL
S113	.	CINEMA ATTENDANCE, ANNUAL (TOTAL)
S114	.	PASSENGER CARS, TOTAL
S115	.	RADIO RECEIVERS, TOTAL
S116	.	T.V. RECEIVERS, TOTAL
S117	.	DAILY NEWSPAPER CIRCULATION, TOTAL
S137	.	CALORIE REQUIREMENT PER CAPITA (FAO)
S138	.	ADULT LITERACY RATE (%) TOTAL (WORLD BANK)
S139	.	LABOR FORCE - TOTAL
S140	.	LABOR FORCE - MALE
S141	.	LABOR FORCE - FEMALE
S144	.	LABOR FORCE, MALES AS % OF TOTAL
S145	.	LABOR FORCE, FEMALES AS % OF TOTAL
S148	.	LABOR FORCE PARTICIPATION RATE, % OF TOTAL WORKING-AGE POP
S149	.	MALE LABOR FORCE PARTICIPATION RATE, % OF MALE WORKING-AGE POP
S150	.	FEMALE LABOR FORCE PARTICIPATION RATE, % OF FEMALE WORK-AGE POP
S151	.	LABOR FORCE IN AGRICULTURE AS % OF TOTAL
S152	.	LABOR FORCE IN INDUSTRY AS % OF TOTAL
S153	.	LABOR FORCE IN SERVICES AS % OF TOTAL
S154	.	ADMISSION PER HOSPITAL BED (WHO)
S158	.	PHYSICIANS - TOTAL NUMBER (WHO)
S159	.	NURSING PERSONS - TOTAL (WHO)
S160	.	NURSING PERSONS - PROFESSIONAL NURSES (WHO)
S161	.	NURSING PERSONS - ASSISTANT NURSES (WHO)

DENUM	UNIT	TITLE
S162	.	NURSING PERSONS - OTHER AUXILIARIES (WHO)
S164	.	MIDWIFERY PERSONS - MIDWIVES (WHO)
S165	.	MIDWIFERY PERSONS - ASSISTANT MIDWIVES (WHO)
S166	.	HOSPITAL BEDS - TOTAL (WHO)
S171	.	PRIMARY ENROLLMENT - TOTAL (UNESCO)
S172	.	PRIMARY ENROLLMENT - MALE (UNESCO)
S173	.	PRIMARY ENROLLMENT - FEMALE (UNESCO)
S174	.	SECONDARY ENROLLMENT - TOTAL (UNESCO)
S175	.	SECONDARY ENROLLMENT - TOTAL GENERAL (UNESCO)
S176	.	SECONDARY ENROLLMENT - TOTAL VOCATIONAL (UNESCO)
S177	.	SECONDARY ENROLLMENT - TOTAL TEACHER TRAINING (UNESCO)
S178	.	SECONDARY ENROLLMENT - FEMALE GENERAL (UNESCO)
S179	.	SECONDARY ENROLLMENT - FEMALE VOCATIONAL (UNESCO)
S180	.	SECONDARY ENROLLMENT - FEMALE TEACHER TRAINING (UNESCO)
S181	.	HIGHER ENROLLMENT - TOTAL (UNESCO)
S182	.	HIGHER ENROLLMENT - MALE (UNESCO)
S183	.	HIGHER ENROLLMENT - FEMALE (UNESCO)
S184	.	TEACHERS PRIMARY - TOTAL (UNESCO)
S187	.	TEACHERS SECONDARY - TOTAL (UNESCO)
S188	.	TEACHERS SECONDARY - TOTAL GENERAL (UNESCO)
S189	.	TEACHERS SECONDARY - TOTAL VOCATIONAL (UNESCO)
S190	.	TEACHERS SECONDARY - TOTAL TEACHER TRAINING (UNESCO)
S192	.	TEACHERS SECONDARY - FEMALE VOCATIONAL (UNESCO)
S194	.	TEACHERS HIGHER - TOTAL (UNESCO)
S197	.	ILLITERATE POPULATION 15 YEARS OLD AND OVER TOTAL (UNESCO)
S198	.	ILLITERATE POPULATION 15 YEARS OLD AND OVER MALE (UNESCO)
S199	.	ILLITERATE POPULATION 15 YEARS OLD AND OVER URBAN TOTAL (UNESCO)
S200	.	ILLITERATE POPULATION 15 YEARS OLD AND OVER URBAN MALE (UNESCO)
S201	.	%ILLITERATE POPULTION 15 YEARS OLD AND OVER TOTAL (UNESCO)
S202	.	%ILLITERATE POPULATION 15 YEARS OLD AND OVER MALE (UNESCO)
S203	.	%ILLITERATE POPULATION 15 YEARS OLD AND OVER FEMALE (UNESCO)
S204	.	%ILLITERATE POPULATION 15 YEARS OLD AND OVER URBAN TOTAL (UNESCO)
S205	.	%ILLITERATE POPULATION 15 YEARS OLD AND OVER URBAN MALE (UNESCO)
S206	.	%ILLITERATE POPULATION 15 YEARS OLD AND OVER URBAN FEMALE (UNESCO)
S207	.	%ILLITERATE POPULATION 15 YEARS OLD AND OVER RURAL TOTAL (UNESCO)
S208	.	%ILLITERATE POPULATION 15 YEARS OLD AND OVER RURAL MALE (UNESCO)
S209	.	%ILLITERATE POPULATION 15 YEARS OLD AND OVER RURAL FEMALE (UNESCO)
S210	.	PHYSICIANS - TOTAL (WORLD BANK)
S212	.	NURSING PERSONS - PROFESSIONAL (WORLD BANK)
S214	.	NURSES OTHER - AUXILIARIES (WORLD BANK)
S218	.	HOSPITAL BEDS - TOTAL (WORLD BANK)
W001	3	TOTAL AREA
W002	.	POPULATION - MID YEAR TOTAL
W003	.	POPULATION MID YEAR TOTAL (ATLAS)
W004	9	GNP (ATLAS)
W005	9	GNP PER CAPITA (ATLAS)
W006	10	GNP (ATLAS)
W007	11	GNP (ATLAS)
W008	11	GNP PER CAPITA (ATLAS)

DENUM	UNIT	TITLE
W009	12	GNP (ATLAS)
W010	.	FOREIGN EXCH RATE, ANNUAL AVERAGE, LOCAL CURRENCY PER $US (ATLAS)
W011	9	GNP
W012	9	GNP PER CAPITA
W013	10	TOTAL RESOURCES
W014	10	PRIVATE CONSUMPTION
W015	10	GENERAL GOVERNMENT CONSUMPTION
W016	10	GROSS DOMESTIC INVESTMENT (TOTAL RESOURCES)
W017	10	INCREASE IN STOCKS
W018	10	STATISTICAL DISCREPANCY IN GDFI
W019	10	GROSS DOMESTIC FIXED INVESTMENT, TOTAL
W020	10	GROSS DOMESTIC FIXED INVESTMENT, MACHINERY AND EQUIPMENT
W021	10	GROSS DOMESTIC FIXED INVESTMENT, BUILDINGS
W022	10	GROSS DOMESTIC FIXED INVESTMENT, OTHER CONSTRUCTION
W023	10	GROSS DOMESTIC FIXED INVESTMENT, PRIVATE SECTOR
W024	10	GROSS DOMESTIC FIXED INVESTMENT, PUBLIC SECTOR
W025	10	GROSS DOMESTIC FIXED INVESTMENT, AGRICULTURE
W026	10	GROSS DOMESTIC FIXED INVESTMENT, MINING
W027	10	GROSS DOMESTIC FIXED INVESTMENT, CONSTRUCTION
W028	10	GROSS DOMESTIC FIXED INVESTMENT, MANUFACTURING
W029	10	GROSS DOMESTIC FIXED INVESTMENT, ELECTRICITY, GAS, & WATER
W030	10	GROSS DOMESTIC FIXED INVESTMENT, TRANSPORTATION & COMMUNICATION
W031	10	GROSS DOMESTIC FIXED INVESTMENT, TRADE
W032	10	GROSS DOMESTIC FIXED INVESTMENT, BANKING, INSURANCE, & REAL ESTATE
W033	10	GROSS DOMESTIC FIXED INVESTMENT, DWELLINGS
W034	10	GROSS DOMESTIC FIXED INVESTMENT, SERVICES
W035	10	GROSS DOMESTIC FIXED INVESTMENT, PUBLIC ADMINISTRATION
W036	10	GROSS DOMESTIC FIXED INVESTMENT, OTHER BRANCHES
W037	10	EXPORTS OF GOODS AND NON-FACTOR SERVICES
W038	10	IMPORTS OF GOODS AND NON-FACTOR SERVICES
W039	10	NET EXPORTS OF GOODS AND NONFACTOR SERVICES
W040	10	STATISTICAL DISCREPANCY IN GDP
W041	10	GDP - GROSS DOMESTIC PRODUCT
W042	10	GNP - GROSS NATIONAL PRODUCT
W043	13	GDP - GROSS NATIONAL PRODUCT
W044	13	GDP - GROSS DOMESTIC PRODUCT BY BRANCH
W045	7	GDP, AGRICULTURE
W046	7	GDP, MINING
W047	7	GDP, CONSTRUCTION
W048	7	GDP, MANUFACTURING
W049	7	GDP, ELECTRICITY, GAS AND WATER
W050	7	GDP, TRANSPORTATION AND COMMUNICATIONS
W051	7	GDP, TRADE
W052	7	GDP, BANK,INSURANCE & REAL ESTATE (FINANCE)
W053	7	GDP, OWNERSHIP OF DWELLINGS
W054	7	GDP, SERVICES
W055	7	GDP, PUBLIC ADMINISTRATION AND DEFENSE
W056	7	GDP, OTHER BRANCHES
W057	7	GDP, STATISTICAL DISCREPANCY

DENUM	UNIT	TITLE
W058	13	GNP - GROSS NATIONAL PRODUCT
W059	13	NATIONAL INCOME, GNP
W060	7	COMPENSATION OF EMPLOYEES
W061	7	NET FACTOR INCOME FROM ABROAD
W062	7	NET INDIRECT TAXES
W063	7	CAPITAL CONSUMPTION
W064	7	GROSS NATIONAL SAVINGS
W065	7	PUBLIC SAVINGS (GROSS)
W066	7	GENERAL GOVERNMENT SAVINGS (GROSS)
W067	7	PUBLIC CORPORATIONS SAVINGS (GROSS)
W068	7	PRIVATE SAVINGS (GROSS)
W069	7	GROSS DOMESTIC SAVINGS
W070	11	GNP - GROSS NATIONAL PRODUCT
W071	11	GNP PER CAPITA
W072	12	TOTAL RESOURCES
W073	12	PRIVATE CONSUMPTION
W074	12	GENERAL GOVERNMENT CONSUMPTION
W075	12	GROSS DOMESTIC INVESTMENT
W076	12	INCREASE IN STOCKS
W077	12	GROSS FIXED INVESTMENT
W078	12	EXPORTS OF GOODS AND NON-FACTOR SERVICES
W079	12	IMPORTS OF GOODS AND NON-FACTOR SERVICES
W080	12	NET EXPORTS OF GOODS AND NONFACTOR SERVICES
W081	12	STATISTICAL DISCREPANCY IN GDP
W082	12	GDP - GROSS DOMESTIC PRODUCT
W083	12	GNP - GROSS NATIONAL PRODUCT
W084	14	GDP - GROSS DOMESTIC PRODUCT
W085	14	GROSS DOMESTIC PRODUCT BY BRANCH
W086	12	GDP, AGRICULTURE
W087	12	GDP, MINING
W088	12	GDP, CONSTRUCTION
W089	12	GDP, MANUFACTURING
W090	12	GDP, ELECTRICITY, GAS AND WATER
W091	12	GDP, TRANSPORTATION AND COMMUNICATIONS
W092	12	GDP, TRADE
W093	12	GDP, BANKING, INSURANCE, & REAL ESTATE
W094	12	GDP, OWNERSHIP OF DWELLINGS
W095	12	GDP, SERVICES
W096	12	GDP, PUBLIC ADMINISTRATION AND DEFENSE
W097	12	GDP, OTHER BRANCHES
W098	12	GDP, STATISTICAL DISCREPANCY
W099	14	GROSS NATIONAL PRODUCT
W100	19	GDP AT MARKET PRICES IMPLICIT DEFLATOR
W159	17	LOCAL CURRENCY PER $US, PERIOD AVERAGE
W160	17	LOCAL CURRENCY PER $US (IFS), ANNUAL AVERAGE
W163	19	AGRICULTURE PRODUCTION INDEX TOTAL
W164	19	FOOD PRODUCTION INDEX
W167	19	MANUFACTURING PRODUCTION INDEX
W168	19	WHOLESALE PRICE INDEX

DENUM	UNIT	TITLE
W169	19	RETAIL (CONSUMER OR C.O.L.) PRICE INDEX
W172	19	EXPORT PRICE INDEX
W173	19	IMPORT PRICE INDEX
W174	.	TERMS OF TRADE

UNIT CODES

UNIT	UNIT NAME
1	Special Drawing Rights - SDRs
2	Current $US
3	Square kilometers
4	Kilograms of coal equivalent
5	Grams
6	Years
7	Local currency - current market prices
8	Metric tons of coal equivalent
9	$US - current market prices
10	Local currency - current market prices
11	$US - constant market prices
12	Local currency - constant market prices
13	Local currency - current factor cost
14	Local currency - constant factor cost
15	Index: (1980=100) - local currency basis
16	Index: (1980=100) - $US basis
17	Currency exchange rate

DATABASE 'BUDGET15'

TABLENO	PFX	CHR	2						historical and budget(4), country level(1) or analytical (6)
BUR-OFIC	PFX	CHR	2						bureau office number (see geographic code book)
DECUNIT	PFX	CHR	3						decision unit number assigned to each country(see code book)
SUBREG		CHR	2						sub region, bureaus are broken down into subregion groups
NONADD		UNP	1						differentiates between program assist and PL480 or housing program
DELCODE		UNP	1						deletion code ,projects to be deleted coded 1, all others coded 0
REC-KEY	PFX	CHR	12						project number and funding source
PROJECT	PFX	CHR	9	POS	1	TO	9(REC-KEY)		project number assigned to activity
GEO-CODE		CHR	3	POS	1	TO	3(REC-KEY)		geographic code of the project number
PROJ-SEQ		CHR	4	POS	4	TO	7(REC-KEY)		project sequence number
PROJ-SFX		CHR	2	POS	8	TO	9(REC-KEY)		subproject number
FDSOURCE	PFX	CHR	3	POS	10	TO	12(REC-KEY)		funding source, approp and lg indicator
APPROP		CHR	2	POS	10	TO	11(REC-KEY)		appropriation code, (ex. health = he)
LG		CHR	1	POS	12	TO	12(REC-KEY)		loan/grant indicator
CPROJECT		CHR	9						congressional presentation project number
TECHCD		UNP	3						technical code (see handbook 18)
DACCD		UNP	6						codes used by the D.A.C. committee for analysis
INITOBL		CHR	2						initial year of obligation
FINOBL		CHR	2						final year of obligation
BGTCUM		UNP	7						total of obligations thru 1979
EXCUM		UNP	7						total of expenditures thru 1979
OBL79		UNP	7						1979 obligation
EXP79		UNP	7						1979 expenditure
OBADJ79		UNP	7						1979 obligation adjustment
OBL80		UNP	7						1980 obligation
EXP80		UNP	7						1980 expenditure
OBADJ80		UNP	7						1980 obligation adjustment
OBL81		UNP	7						1981 obligation
EXP81		UNP	7						1981 expenditure
OBADJ81		UNP	7						1981 obligation adjustment
EXADJ81		UNP	7						1981 expenditure adjustment
CP81		UNP	7						1981 congressional presentation amount
OBL82		UNP	7						1982 obligation
EXP82		UNP	7						1982 expenditure
OBADJ82		UNP	7						1982 obligation adjustment
EXADJ82		UNP	7						1982 expenditure adjustment
CP82		UNP	7						1982 congressional presentation amount
OYB82		UNP	7						1982 operating year budget from cp83
OBL83		UNP	7						1983 obligation
EXP83		UNP	7						1983 expenditure
OBADJ83		UNP	7						1983 obligation adjustment
EXADJ83		UNP	7						1983 expenditure adjustment
CP83		UNP	7						1983 congressional presentation amount
OYB83		UNP	7						1983 operating year budget from cp84
OBL84		UNP	7						1984 obligation
EXP84		UNP	7						1984 expenditure
OBADJ84		UNP	7						1984 obligation adjustment
EXADJ84		UNP	7						1984 expenditure adjustment
CP84		UNP	7						1984 congressional presentation amount
LOPCOST		UNP	7						authorized life of project
BUDLOP		UNP	7						planned life of project

KEY1	UNP	6	analytical data (K. Lee)
KEY2	UNP	6	analytical data (mission subcat code)
KEY3	UNP	6	=8 indicates project will be shown on budget tables
KEY4	UNP	6	analytical data (VY for 1984)
KEY5	UNP	6	analytical data (VY for 1985)
KEY6	UNP	6	analytical data
KEY7	UNP	6	analytical data
KEY8	UNP	6	analytical data
KEY9	UNP	6	analytical data
KEY10	UNP	6	analytical data
KEY11	UNP	9	analytical data
KEY12	UNP	9	analytical data
KEY13	CHR	25	analytical data
BURNAME	DCD	40	FROM BUR-OFIC name of bureau
BUDBUR	DCD	25	FROM BUR-OFIC
GEO-NAME	DCD	40	FROM GEO-CODE country or decision unit name
DECNPKNM	DCD	50	FROM DECPACK
PRJTITLE	DCD	40	FROM PROJECT project title
BAPPR-NM	DCD	40	FROM APPROP
PROG-NM	DCD	40	FROM PROGRAM
DECNAME	DCD	25	FROM DECUNIT name of country/decision unit
CTRYNAME	DCD	25	FROM BENCNTRY USE DECNAME
SHRT-NAM	DCD	3	FROM PLNOBLS
SUBCATNM	DCD	40	FROM CATCODE
TECHNM	DCD	40	FROM TECHCD
KEYS	BLT	24	
ITEMNO	BLT	8	
$FIXED	CHR	1209	
ALLKEYS	BLT	24	

DOC#0560N

Appendix F

Members of ESDB Operating Systems PDS's In Production Environment And New SAS Report Generator

96

EASA COMMON DATA AREA

```
DSORG ALLOC UNUSED EXTENTS DSNAME
DSN NOT ON DISK - D520.AID2USDA.BKUP
  PO    100     33      1   D520.BERRY.CNTL
  PS      1             1   D520.COUNTRY.DATA
  PS     29             4   D520.CP.AA0506
  PO     25      5      1   D520.CP.MACLIB
DSN NOT ON DISK - D520.DACDATA
DSN NOT ON DISK - D520.ESDOFICL.BKUP
  PO     80     36      1   D520.FORMAT.$SORLIB
  PO    120     95      1   D520.FORMAT.SASLIB
  PO     90     77      1   D520.GENESIS.CLIST
  PO    150    145      1   D520.GENESIS.FORMATS
  PO     90     65      1   D520.GENESIS.SASLIB
  PO    120     98      1   D520.GENESIS.SASPGM
DSN NOT ON DISK - D520.IMFTP.BKUP
  PS     60             1   D520.NUCLEUS.BINARY.DYB1TALL
  PS     88             1   D520.NUCLEUS.BINARY.DYB2
  PS     18             1   D520.NUCLEUS.BINARY.DYB2T05
  PS      6             1   D520.NUCLEUS.BINARY.DYB2T06
  PS     20             1   D520.NUCLEUS.BINARY.DYB2T10
  PS     34             1   D520.NUCLEUS.BINARY.DYB2T12
  DA     60      *      1   D520.NUCLEUS.BINARY.LABORDA
  DA     95      *      1   D520.NUCLEUS.BINARY.UN80F2
  DA     64      *      1   D520.NUCLEUS.BINARY.UN80F3
  PO     39      9      1   D520.NUCLEUS.HELP.DATA
  PO    123             1   D520.NUCLEUS.LOAD
  PS      1             1   D520.NUCLEUS.LOGIN.DATA
  PS      1             1   D520.NUCLEUS.LOGQLOG.DATA
  PO     37      3      2   D520.NUCLEUS.POPR.CLIST
  PO    105      1      1   D520.NUCLEUS.SOURCE.DATA
  PS      2             1   D520.NUCLEUS.TAPESWFS.DATA
  PO     43             1   D520.NUCLEUS.VARIABLE.DATA
  PS     20      5      1   D520.REGION.DATA
  DA   1200      *      1   D520.SASDB.AIDBUDG
  DA   2000      *      1   D520.SASDB.BKUP
  DA    140      *     11   D520.SASDB.CP
  DA   2640      *     14   D520.SASDB.HISTORY
  DA    150      *      1   D520.SASDB.INFO
  DA    200      *      1   D520.SASDB.POP
  DA   1200      *      1   D520.SASDB.USDA
  DA   1050      *     14   D520.SASDB.WTAB
DSN NOT ON DISK - D520.SEDBIFS.BKUP
SN NOT ON DISK - D520.TAPEBOP.SASDISK
DSN NOT ON DISK - D520.TAPEBOP.SASFMT
DSN NOT ON DISK - D520.TAPEDOT.SASDISK
SN NOT ON DISK - D520.TAPEDOT.SASFMT
DSN NOT ON DISK - D520.TAPEGFS.SASDISK
SN NOT ON DISK - D520.TAPEGFS.SASFMT
DSN NOT ON DISK - D520.TAPEIFS.SASDISK
SN NOT ON DISK - D520.TAPEIFS.SASFMT
  PS      1             1   D520.TAXCODES
```

NNETTE BINNENDIJK

```
SORG ALLOC UNUSED EXTENTS DSNAME
  DA      5      *      1   D520HH.ANNETTE
  PS      1             1   D520HH.DET.CNTL
```

97

```
*** TSO FOREGROUND MEMBER LIST **
DSNAME=D520.GENESIS.SASPGM
   ATDBUDG
   DEBTUPDT
   DOD
   HR
   TMFUPDT
   SIDFUPDT
   TERMTYPE
   WTABUPDT
```

```
*** TSO FOREGROUND MEMBER LIST **
DSNAME=D520.GENESIS.CLIST
  BUCEN
  DEBTUPDT
  ENERGY
  IMFUPDT
  POP
  SERA
  SIDFUPDT
  WTABUPDT
```

```
*** TSO FOREGROUND MEMBER LIST **
DSNAME=D520.GENESIS.FORMATS
   $DUTDEN
   $GFSDEN
   $IFSDEN
   $IMFCC
   $IMFFIPS
   $WPABBR
   $WTABDEN
```

10

*** TSO FOREGROUND MEMBER LIST **
DSNAME=D520SM.MERLIN.MACLIB

ASKTITLE
COUNTRY
CPPAGE
CPPAGEX
DECODE
ESDB
HELP
INDEXBLD
INDEXOPT
MAKEFMT
MAP
MAPAFR
MAPMAP
MRY
PRINCYYR
REPORTN
REPORTS
R001
R003
R301
R302
R303
R304
R305
R306
R307
R308
R309
R310
R311
R312
R313
R314
R315
R316
R317
R318
R320
R321
R322
R323
R324
R330
R331
R332
R333
R334
R335
R336
R337
R338
R339
R340
R341
R343
R344
R345
R346
R347
R350
R351
R352
R353
R354
R355
R356
R357
R358
R359
R360
R401
R402
R403
R404
R405
R406
R407
R409
R410
R411
R412
R413
R414
R415
R416
R417
R421
R422
R423
R424
R425
R426
R427
R428
R429
R430
R431
R432
R433
R434
R435
R436
R437
R438
R440
R441
R442
R443
R444
R445
R446
R447
R501
R502
R503
R504
R505
R506
R507
R508
R509
R510
R511
R512
R901
R902
R903
R904
R905
R906
SEARCH
SELCNTRY
SELDENUM
SELREGN
TYPE
USAGE
VARNAMES
WP
YEARDOWN