PN-ACB-214
95005

AN ASSESSMENT OF ALTERNATIVE REHABILITATION OPTIONS FOR THE GRIRO THERMAL POWER STATION IN BUCHAREST, ROMANIA

FINAL REPORT

U.S. AGENCY FOR INTERNATIONAL DEVELOPMENT

Eastern Europe Regional Energy Efficiency Project

Contract No. EUR-0030-C-00-2053-00, Task 1

Prepared By:

K & M Engineering and Consulting Corporation
2001 L Street, N.W., Suite 500
Washington, DC 20036

Under Subcontract to:

RCG/Hagler, Bailly, Inc.
1530 Wilson Boulevard, Suite 900
Arlington, VA 22209-2406

December 22, 1993

AN ASSESSMENT OF ALTERNATIVE REHABILITATION OPTIONS FOR THE GRIRO THERMAL POWER STATION IN BUCHAREST, ROMANIA

TABLE OF CONTENTS

			Page
Executive Summary			vii
I.	K&M Subcontract Task Description		1
	1.0	The GRIRO Project - Rehabilitation of Thermal Power Station	1
	2.0	Scope of Work	2
	3.0	Deliverables	3
II.	Introduction		3
	1.0	Background	3
		1.1 Electrical and Thermal Production Capacity	5
	2.0	Objective of Study	6
III.	Need for the Project		6
	1.0	Existing Facilities	6
	2.0	Existing Capability	7
	3.0	Forecasted Thermal and Power Demand	10
IV.	Technical Feasibility		11
	1.0	Availability and Quality of Fuels	11
	2.0	Options to be Considered	14
	3.0	Analysis and Discussion of Options	16
		3.1 Base Case Modernization - Option I	16
		3.1.1 Option IA	16
		3.1.2 Option IB	16
		3.2 Thermal and Electric Expansion - Option II	17

TABLE OF CONTENTS (Continued)

				Page
		3.3	Thermal and Electric Expansion Utilizing Gas/Oil Fired Combined Cycle Cogeneration Plant - Option III	17
			3.3.1 Option IIIA	17
			3.3.2 Option IIIB	19
	4.0	Recommended Option		20
		4.1	Discussion and Recommendation	20
		4.2	Plant Description and Features	21
			4.2.1 Configuration	21
			4.2.2 Mechanical Systems	22
			4.2.2.1 Combustion Turbine Generator (CTG)	22
			4.2.2.2 Steam Turbine	23
			4.2.2.3 Heat Recovery Steam Generator	23
	5.0	Major Equipment Preliminary Specifications		24
		5.1	Combustion Turbine Generator	24
			5.1.1 General	24
			5.1.2 Electrical Power Requirements	25
			5.1.3 Sound Levels	26
			5.1.4 Safety	26
			5.1.5 Combustion Turbine Generator	26
			5.1.6 Overall Responsibility	27
		5.2	Heat Recovery Steam Generator	28
			5.2.1 General	28
		5.3	Steam Turbine Generator	30
		5.4	Existing Equipment Rehabilitation	31
V.	Environmental Impact Assessment			33
	1.0	General		33
	2.0	Air Quality		34
	3.0	Water/Wastewater Discharge Quality		34
	4.0	Noise and Other Social Impacts		34

TABLE OF CONTENTS (Continued)

				Page
VI.	Project Cost and Schedule			34
	1.0	Scope Definition		34
	2.0	Estimate Basis		34
		2.1	Quantities	34
		2.2	Equipment and Material Prices	35
		2.3	Installation Labor	35
		2.4	Other Cost Items	35
		2.5	Future Escalation	36
		2.6	Custom Duty	36
		2.7	Owner Costs	36
		2.8	Foreign/Local Currency Split	36
		2.9	Exclusions	36
	3.0	Summary of Project Costs		38
	4.0	Project Milestone Schedule		38
		4.1	Introduction	38
		4.2	Plant Schedules	41
VII.	Economic Analysis			45
	1.0	Benefit Cost Analysis of Considered Options		45
	2.0	Economic Evaluation and Recommendation		47
VIII.	Alternative Financing Options			49
	1.0	Overview of Relevant Project Development Alternatives		49
		1.1	The Government Sponsored Project Approach	49
		1.2	The Privatized Built-Own-Operate Approach	50
	2.0	Overall Financing Requirements		53
	3.0	Preliminary Financing Schemes		53
		3.1	Full Sovereign Debt Scenario	53
			3.1.1 Potential Sources of Debt	55
			3.1.2 Potential Sources of Equity	56
		3.2	Limited Recourse Financing Scenario	56
			3.2.1 Potential Sources of Debt	57
			3.2.2 Potential Sources of Equity	59

TABLE OF CONTENTS (Continued)

			Page
IX.	Recommended Next Steps		60
	1.0	Preliminary Actions for GRIRO	60
	2.0	Suggested Follow Up Activities for GRIRO and Ministry of Industry	
	3.0	Proposed Next Steps for USAID	61
X.	Appendices		62
Table I	Existing Equipment List		65
Table II	District Heating Temperature		68
Figure I	Typical Week - Winter Energy Production		77
Figure II	Typical Week - Summer Energy Production		78
Figure III	Existing Mechanical Equipment Functional Diagram		79
Figure IV	Electrical System Schematic		80
Figure V	Yearly Thermal and Electrical Energy Production		81
Figure VI	Gas and Oil Yearly Consumption		82
Figure VII	Bucharest Gas Distribution Grid		83
Figure VIII	Heat Balance Diagram, Recommended Option IIIA		84
	• Case IIIA Winter Load (-8°C) Full Firing		85
	• Case IIIA Summer Load (+21°C) Full Firing		87
	• Case IIIA Summer Load (+21°C) Full Firing Steam Injection		89
	• Case IIIA Winter Load (-8°C) Maximum Electrical/Output		91
Table VI-2	Capital Cost Estimate		
	• Option IA - Romanian Supply		93
	• Option IA - International Supply		94
	• Option IB - Romanian Supply		95
	• Option IB - International Supply		96
	• Option II - Romanian Supply		97
	• Option II - International Supply		98
	• Option IIIA - Romanian Supply		99
	• Option IIIA - International Supply		101
	• Option IIIB - Romanian Supply		103
	• Option IIIB - International Supply		104

TABLE OF CONTENTS (Continued)

		Page
Table VII-2	Benefit - Cost Analysis	
	• Option IA - Romanian Supply	106
	• Option IA - International Supply	107
	• Option IB - Romanian Supply	108
	• Option IB - International Supply	109
	• Option IIA - Romanian Supply	110
	• Option IIA - International Supply	111
	• Option IIIA - Romanian Supply	112
	• Option IIIA - International Supply	113
	• Option IIIB - Romanian Supply	114
	• Option IIIB - International Supply	115
Table VII-3	Annual Power, Heat Production and Fuel Consumption Assumptions	116
Table VII-4	Parameters Used on the Economic Analysis	117
Table VII-5	Additional Benefits and Costs	119
Table VII-7	Rate of Return Estimate	
	• Option IA - Romanian Supply	120
	• Option IA - International Supply	121
	• Option IB - Romanian Supply	122
	• Option IB - International Supply	123
	• Option II - Romanian Supply	124
	• Option II - International Supply	125
	• Option IIIA - Romanian Supply	126
	• Option IIIA - International Supply	127
	• Option IIIB - Romanian Supply	128
	• Option IIIB - International Supply	129
SKETCHES - Functional Diagram		
	• Option IA	
	• Option IB	
	• Option II	
	• Option IIIA	
	• Option IIIB	
	• General Arrangement Option IIIA	

TABLE OF CONTENTS (Continued)

		Page
XI.	List of United States Manufacturers	130
	1.0 Combustion Turbines	
	2.0 Heat Recovery Steam Generators	
	3.0 Steam Turbines	
	4.0 Condensers	
	5.0 Pumps	
	6.0 Heat Exchangers	
XII.	Environmental Impact of the New Facility Atmospheric Releases	
	1.0 General	132
	2.0 European Community Directives	132
	3.0 Atmospheric Releases of the New Facility	135
XIII.	Translation of Romanian Foreign Investment Law	137
XIV.	Final Comments and Conclusions	
	1.0 Sequence of Events	141
	2.0 GRIRO's Review of Draft Report	141
	3.0 Option Selected by GRIRO	141
	4.0 Future Actions to Implement GRIRO's Selected Option	141
	5.0 Possible Sources of Financing	142

EXECUTIVE SUMMARY

This Final Report contains the findings and recommendations from K&M Engineering and Consulting Corporation's assessment of alternative rehabilitation options, including development of alternative financing options for the GRIRO thermal power station in Bucharest, Romania. This work was performed under subcontract to RCG/Hagler-Bailly, Inc., and funded by the U.S. Agency for International Development, Bureau for Europe Energy and Infrastructure Division, as a part of a broader technical assistance program designed to improve overall energy efficiency in the industrial sectors of selected Eastern European countries, especially through enhanced participation by the private sector. In particular, this task assignment was intended to provide preliminary planning, conceptual engineering design, and project development assistance to GRIRO S.A. in an attempt to facilitate the development and early deployment of an energy efficiency improvement demonstration project at its plant site in northwest Bucharest. The GRIRO rehabilitation project is a promising project from the standpoint of need, replicability, and potential for private sector participation.

With respect to relevant background on the company, GRIRO S.A. is a major industrial corporation which specializes in the fabrication of heavy steel products including storage tanks, pressure vessels and heat exchangers. At present, approximately over 50 percent of GRIRO's current production is for export, primarily to Japan, Italy, France, Switzerland, Turkey, Bangladesh and neighboring Eastern European countries. Such a high volume of exports implicit in this percentage is, in all probability, sustainable for the near future given the fact that Romania's production costs are only twenty (20) percent of those in Western Europe for comparable products. In this regard, the firm presently carries a one to two year backlog of orders, and earns the majority of its income in hard currency, of which the Government of Romania permits it to retain a portion. In addition, the company participated in the original USAID-sponsored emergency energy assistance program, and has since implemented most of the near-term recommendations of that program, including the appointment of an energy manager trained under the same USAID project. Moreover, GRIRO S.A. is the only firm in Romania licensed under U.S. ASME code for the manufacture and repair of ASME-coded pressure vessels, and indeed the only firm in Eastern Europe empowered to use ASME U and U2 manufacturing stamps. Finally, GRIRO S.A. has prospered and grown over the past few years, despite the fact that the economy of Romania in general has continued to experience a sharp decline in overall production, income and employment over this same period of time.

PROJECT OPPORTUNITY AND NEED FOR THE STUDY

The existing power plant located at the GRIRO facility not only furnishes electricity and process steam for use in the various GRIRO S.A. shops on site, but is also responsible for providing district heating water to approximately 10,000 apartments, as well as small amounts of process steam to a hospital and nearby industries. In addition, during periods of low demand in the various steel fabrications shops, surplus electricity production is sold to RENEL, the state-owned electric utility.

However, more recently, due to the poor reliability and deteriorating condition of its generating equipment, GRIRO increasingly has been forced to purchase more and more electricity from the grid, primarily during periods of peak demand. Moreover, GRIRO has recently been unable to meet its district heating load requirements, especially during the critical winter months.

The original steam production and power generation equipment for the existing facility was installed beginning in 1929, and consisted of six (6) Babcock & Wilcox boilers with a capacity of 13 metric tons of steam per hour (Mt/h) each, as well as a 1.6 MWe Brown Bovari steam turbine. In 1965, a 50 Mt/h Romanian boiler and 6 MWe Russian steam turbine were added to the facility to meet growing load requirements at the various shops on-site. Of the six original boilers, only two remain in operation today. Both are capable of being fired by either natural gas or fuel oil. The 50 Mt/h boiler was designed to burn natural gas only, but is presently being refitted to permit firing by fuel oil as well, especially during the winter months when natural gas availability and distribution system pressures are both extremely low. Finally, due in large part to the very poor condition of the existing district heating equipment, particularly the heat exchangers, the GRIRO S.A. facility can no longer fulfill its contractual obligation of supplying hot water to 10,000 apartments in RADAT's district heating Zone 6.

Below is the forecast for the requirements for district heating and steam:

EXHIBIT ES-1

Steam		Mt/h Maximum	Mt/h Medium	Mt/h Minimum	Mt/y Annual
TOTAL	1992	93.9	50.2	30.1	86,387
	1996	34.7	19.08	10.7	35,000
Hot Water (GCal/h)					
TOTAL	1992	44.25	30.16	10.7	183,572
	1996	69.25	42.8	9.5	250,000
Residential	1992	25	17	9.6	127,154
	1996	50	30	8	186,038

GRIRO S.A. finds itself at a critical juncture. It can no longer put off a decision regarding modernization of its existing process steam generation, electric generation, and district heating facilities because it has become an urgent necessity. At the same time, demand is growing in both district heating Zones 1 and 6 adjacent to the GRIRO site, and the price that RADAT pays potential cogeneration producers has begun to approach levels that may justify additional investments by GRIRO in adding such capacity. Moreover, the price that RENEL is willing to pay independent power producers in Romania is also beginning to approach a level where surplus electricity sales may be able to generate substantial additional profits for GRIRO, should GRIRO choose to intentionally oversize its replacement steam generator and power production equipment so as to be able to sell surplus electricity from a modernized facility under the terms

and conditions of a long-term power purchase agreement. Accordingly, in an effort to assist GRIRO, S.A. in better understanding the rehabilitation alternatives available at this critical juncture, USAID offered to sponsor this preliminary feasibility study effort, including development of alternative financing options.

PLANT REHABILITATION ALTERNATIVES EVALUATED

In concert with GRIRO and RCG/Hagler-Bailly staff, K&M developed several alternative scenarios and options for evaluation during this study effort. These rehabilitation alternatives are briefly described below:

I. Base Case Modernization Program

Option IA - This option considers the addition of a 50 Mt/h dual firing boiler (gas or oil), and keeping the existing 50 Mt/h boiler in operation. There will be no increase in electrical output, and the actual district heating load will be met with no allowance for future growth. This is the lowest capital cost option, and all of the required components can be manufactured in Romania.

Option IB - The output from this option is similar to Option IA, the only advantage being more flexibility of operation with the addition of two (2) 25 Mt/h boilers. The capital cost is higher than in the previous option, and all of the required components can be manufactured in Romania.

II. Modest Expansion in Thermal and Electrical Capacity

Option II - This option considers the installation of two (2) new 55 Mt/h boilers while keeping the existing 50 Mt/h boiler in operation, and the addition of a new 16 MWe steam turbine, permitting the sale of 10 MWe of electricity during the winter as well as 16 MWe during the summer to RENEL. In addition, the forecasted future district heating demand will be met. The capital cost for this option is higher than in the two previous options. All of the components to implement this option can be manufactured in Romania.

III. Creation of a Major Cogeneration Facility and New Profit Center

Option IIIA - This option considers the installation of an energy efficient combined cycle facility consisting of a combustion turbine and a heat recovery steam generator with additional duct firing, along with a new steam turbine generator. A key assumption with respect to this option is that sufficient quantities of light automotive diesel oil will be made available to the project direct from the refinery as discussed with the Ministry of Industry and Material Resources. This option will permit the sale of 44 MWe of electricity during the winter and 72 MWe during the summer to RENEL, and allow for continued expansion of district heating services in RADAT district heating Zones 1 and 6. The operating flexibility of the combined

cycle cogeneration facility will permit an optimum balance between electricity production and district heating demand at different load conditions. In addition, the existing 50 Mt/h boiler and one of the operable 13 Mt/h boilers will remain in operation as a back-up to the combustion turbine. The combustion turbine will have to be imported, but the balance of equipment, including the steam turbine generator, can be manufactured in Romania. The capital cost for this option is the second highest of all options considered.

Option IIIB - This option considers the installation of two (2) combustion turbines and heat recovery steam generators with additional duct firing along with a new steam turbine generator. This option would also utilize light automotive diesel fuel rather than natural gas as its primary fuel source. The output of this option is very similar to the previous case, but with additional operational flexibility, redundancy and reliability resulting from having two combustion turbines instead of one. As in the previous option, in the event of failure of a single combustion turbine, the existing 50 Mt/h and 13 Mt/h boilers will be kept available as backups. The combustion turbines will have to be imported, but the balance of equipment can be manufactured in Romania. The capital cost for this option is the highest of all options considered.

OVERALL STUDY APPROACH

In undertaking this assessment, K&M first evaluated each of these alternative rehabilitation options from the perspective of overall technical feasibility, including optimum use of existing facilities, ease of installation given current plot area constraints, availability of suitable fuels and sufficient water, compliance with existing environmental standards, enhanced equipment reliability, increased efficiency of operational units, ability to combust more than one fuel, good operating flexibility at both minimum and maximum anticipated loadings, and ability to meet winter and summer forecasted demand for hot water as well as generate surplus electricity for sale to RENEL.

Next, K&M undertook a detailed analysis of anticipated project costs for each option preparatory to performing a comparative economic analysis of all options considered. In conducting this comparative economic evaluation, K&M utilized two separate ranking criteria: (1) the ratio of the present value of the anticipated stream of benefits from the project to the present value of the estimated costs; and (2) the internal rate of return calculated in accordance with standardized procedures developed by the World Bank.

Finally, K&M developed two alternative financing scenarios for the preferred option; the first plan was based on sovereign debt financing backed by the full faith and credit of the Government of Romania, and the second based upon limited recourse project financing on a privatized basis.

HIGHLIGHTS OF FINDINGS AND RECOMMENDATIONS

An overview of technical parameters, including major differences in equipment, steam production capability, product output for use in meeting district heating obligations, and seasonal electrical output for each of the five options evaluated, is presented in Exhibit ES-1.

EXHIBIT ES-2

OVERVIEW OF TECHNICAL PARAMETERS
OF CONSIDERED OPTIONS

Option	Equipment	Steam Production*	District Heating Product	Electrical Output MWe Winter/Summer
IA	2 - 50 Mt/h boilers	100 Mt/h	77 Gcal/h	7.6
IB	2 - 25 Mt/h 1 - 50 Mt/h	100 Mt/h	77 Gcal/h	7.6
II	1 - 50 Mt/h 2 - 55 Mt/h boilers	160 Mt/h	77Gcal/h	15.9/21.3
IIIA	1 Combustion Turbine 1 - 50 Mt/h 1 - 13 Mt/h boilers	163 Mt/h	77Gcal/h	49.0/77.7
IIIB	2 Combustion Turbines 1 - 50 Mt/h 1 - 13 Mt/h boilers	163 Mt/h	77 Gcal/h	49.7/65.1

*Winter -8°C ambient temperature

Note: Assumes fixed output to meet demand, higher output available for Options II, IIIA and IIIB if required.

A summary of the results from a comparative economic analysis performed by K&M, from the standpoint of both net present value of the benefit/cost ratio and internal rate of return for each of the five options considered, is presented below in Exhibit ES-2.

EXHIBIT ES-3

SUMMARY OF RESULTS FROM COMPARATIVE ECONOMIC ANALYSIS
OF CONSIDERED OPTIONS

	Capital Cost in Thousands of 1993 U.S. Dollars		Internal Rate of Return		Net Present Value Benefits/Costs	
Option	Romanian Supply	International Supply	Romanian Supply	International Supply	Romanian Supply	International Supply
IA	2,110	4,640	1.120	0.570	2.796	2.362
IB	2,350	4,680	0.954	0.565	2.736	2.347
II	5,540	12,680	0.530	0.243	1.550	1.326
IIIA	37,800	41,900	0.252	0.229	1.474	1.426
IIIB	42,360	46,460	0.171	0.156	1.246	1.204

As illustrated above, Options IA and IB require the smallest capital investment and might make sense if only limited internal financing were available; however, in the final analysis, these options are only temporary solutions and are incapable of meeting future growth in the demand for residential heating. In addition, from the standpoint of electricity generation, this is not a particularly attractive scenario. Either option will require overhaul of the smaller 1.6 MW turbine generator first installed in 1935. Even after such an overhaul, sustainable and reliable operation of this unit cannot be guaranteed. Moreover, despite the fact that these options possess the highest net present value benefit/cost ratios and internal rates of return of all options considered, neither option represents a growth strategy for the future nor permits GRIRO to be in a position to generate additional profits from surplus steam, hot water and electricity sales under long-term purchase arrangements with both RADAT and RENEL.

Option II offers more advantages to GRIRO than either of the previous options in that it will permit the generation of a small amount of surplus electricity to be sold to RENEL for what essentially amounts to an energy charge, as well as meet present and future district heating demand requirements. However, this option is not capable of contributing significant amounts of electricity for sale to RENEL under the terms and conditions of a long-term power purchase agreement, and as such, GRIRO is foregoing profits that it might otherwise have captured. Similarly, greater electricity production at the GRIRO site is also desirable from RENEL's perspective since it obviates the need for providing new production capacity in the northwestern part of Bucharest to meet rising industrial demand, increases overall system reliability, and contributes toward stabilization of the grid.

Option IIIA offers the combined advantages of being the most efficient, flexible, and environmentally sound option. It can also provide additional thermal energy to meet future growth in demand for hot water in RADAT district heating Zones 1 and 6, and possesses alternative steam generation capacity through retention of two of the existing boilers as designated backups. In addition, this option can supply a larger amount of electricity on a sustainable year-round basis than any other considered option, thereby permitting RENEL access to approximately 44 MWe in the winter, and 72 MWe during the summer when a reliable source of additional electricity generation is most needed in Romania. Moreover, it has a reasonable internal rate of return (25.2 percent for the case which attempts to maximize local content), and a respectable benefit/cost ratio (1.474 for the same case). Finally, the operational flexibility of this proposed combined cycle facility will permit an optimum balance of electrical and thermal loading throughout the year to meet rapidly changing seasonal demands and requirements.

Option IIIB has the highest capital cost of all options considered, but with a lower year-round electrical output than Option IIIA. Moreover, its internal rate of return and net present value benefit/cost ratios are considerably lower than those of Option IIIA for similar cases. The only advantage of Option IIIB over IIIA is the additional flexibility and reliability made possible by the use of two combustion turbines instead of one. However, taking into consideration the fact that recent experience has shown that the average availability for advanced aeroderivative combustion turbines with steam injection is over 95 percent, the added flexibility implicit in this

option is hardly worth the increased cost.

Based upon the technical and economic analyses conducted for this prefeasibility study as well as the discussion highlights presented above, K&M recommends that GRIRO seriously consider implementation of Option IIIA as it reviews its expansion and business plan options for the next twenty to thirty years. This is a forward looking strategy tailored toward creating a new business line/profit center for GRIRO. The closest analogy that K&M can draw is that when profits declined dramatically in the Hawaiian sugar industry about ten years ago, producers began to expand their bagassee-fired cogeneration capacity, selling surplus electricity to the Hawaiian grid under long-term power purchase agreements that covered both fixed and variable costs, as well as debt servicing and a guaranteed profit or return on equity. Today, fully forty (40) percent of the Hawaiian sugar industry's profits are derived from such power purchase arrangements, Moreover, such contributions to profits are of a non-cyclicable nature, emanate from a predictable stream of payments, and can be utilized to secure project financing.

ALTERNATIVE FINANCING APPROACHES

In today's uncertain and generally difficult investment climate in Eastern Europe, the great paradox is that oftentimes the larger the project, the easier it is to arrange financing. In the case of the GRIRO rehabilitation project, total project costs (as opposed to total financial requirements) for the various rehabilitation options evaluated in this preliminary feasibility study range from US$2.11 million for Option IA to US$42.36 million for Option IIIB under a scenario that attempts to maximize local Romanian supply. While Option IA may possess the highest benefit/cost ratio as well as internal rate of return of all options evaluated, it will be next to impossible to arrange external financing from an international financial institution because the loan amount is simply too small to consider. For instance, the European Bank for Reconstruction and Development (EBRD) is really only looking for larger projects in the US$30-40 million range. Accordingly, if GRIRO decides to select either Option IA, IB, or II, it will in all probability have to arrange its own project financing through a commercial bank already familiar with doing business in Romania. At the present time, such financing is extremely difficult to arrange for Romania.

On the other hand, assuming that GRIRO agrees with K&M's recommendation that Option IIIA presents the greatest opportunity for generating additional profits while at the same time improving overall energy efficiency, operational flexibility, and environmental compliance, a number of interesting financing options are possible. Two such preliminary financing schemes are explored in the study; one based on a government-sponsored project approach, and the other based on a privatized build-own-operate approach. In both instances, a 70/30 debt to equity ratio was employed. In the case of a loan backed by a sovereign debt guarantee signed by the Government of Romania, the banks will require at least 30 percent equity for any project in Romania today. With respect to project financing arranged on a limited recourse basis (such as the case of a privatized cogeneration facility on a BOO basis selling both thermal energy and electricity over the fence under long-term purchase agreements), a 70/30 ratio represents an appropriate level of gearing given a preliminary assessment of the project's risks, coupled with

the potentially constant level of revenues anticipated over the project's life.

In K&M's view, any project financing scheme for this project based upon utilizing the full faith and credit of the Government of Romania to guarantee repayment of the loan will be extremely difficult to arrange at the present time. Accordingly, of the two project development/financing scheme approaches reviewed in the study, K&M recommends that GRIRO consider proceeding with a privatized cogeneration facility whose project financing is secured by a combination of owner's equity (on the part of the project sponsors) and the value implicit in long-term power purchase and thermal energy sales agreements with RENEL and RADAT, respectively. In this case, by arranging to put up 30 percent of the total financing requirements for this project, the project sponsors will have the right to build, own, and operate this cogeneration facility for a specified duration of time (generally 15-20 years). The balance of project financing will be secured on a limited recourse basis and backed by the value of the long-term power purchase and thermal energy sales agreements, as well as possible secondary guarantees from government, bilateral, and/or multilateral organizations.

Potential sources of debt that can be anticipated for a privatized energy project on a BOO basis (i.e. - a privatized company as a separate profit center) selling electricity to GRIRO S.A. and RENEL under a long-term power purchase contract and thermal energy to GRIRO S.A., RADAT, and other interested commercial customers under long-term thermal energy sales agreements include the following: multilateral agencies such as the European Bank for Reconstruction and Development (EBRD) and possibly the International Finance Corporation (IFC); the Overseas Private Investment Corporation (Finance Program); commercial banks through co-financing with multilateral institutions; and debt/debt swaps and local banks to meet local currency requirements.

Similarly, potential sources of equity and in-kind contributions that can be anticipated for such a project structure include: the project sponsors; the EBRD's Merchant Banking Group; other multilateral equity participation (possibly by the IFC); RENEL; RADAT; and local institutional, corporate, and individual investors.

RECOMMENDED NEXT STEPS

It is suggested that GRIRO initiate discussions with both RENEL and RADAT regarding their potential interest in such a project from the standpoint of becoming future customers, as well as to explore whether they are interested in becoming one of the project sponsors. In this regard, K&M recommends that GRIRO, RENEL, and RADAT consider signing a Memorandum of Understanding (MOU) setting forth their intentions to encourage the development of this proposed cogeneration facility on a privatized basis. For its part, GRIRO should be prepared to provide a suitable site located on the grounds of its steel fabrication plant in northwest Bucharest. Further, GRIRO should be willing to state its intent to promote the establishment of a separate project company on a privatized basis to build, own, generate and sell electricity to RENEL and thermal energy to RADAT and possibly other commercial customers. Similarly, RENEL and RADAT should be prepared to state their intent to purchase specific quantities of electricity and thermal energy under long-term agreements.

With respect to suggested next steps for the Ministry of Industry and Material Resources and GRIRO S.A., it should be prepared to encourage and support the following additional activities:

- The initiation of a financial risk assessment and institutional framework analysis to be prepared by outside technical consultants which focuses primarily on potential investment constraints in Romania today to building, owning and operating private power and thermal generation facilities.

- The commissioning of a fuels availability study with special emphasis on alternatives for improving line pressure in the existing natural gas distribution system, and potential procurement sourcing for distillate fuels suitable for use in combustion turbines.

- The preparation of a detailed feasibility analysis for Option IIIA, including soils analysis, detailed equipment specifications, engineering drawings, and tariff requirements.

- The establishment of a joint-venture project company with interested project sponsors, possibly with the assistance of a U.S. private power developer.

Finally, regarding recommended next steps for USAID, as a direct follow-on to the prefeasibility analysis performed under the current contract, it is proposed that USAID consider providing technical assistance support involving undertaking the following actions:

- Support the continued development of this promising private energy project opportunity by providing additional technical assistance to GRIRO to conduct a risk assessment and institutional framework analysis, as well as a fuels availability assessment for this project.

- Provide additional institutional framework/privatization assistance in such areas as private power seminars/workshops, opportunities for GRIRO and RENEL senior management to review firsthand with successful U.S. private power developers the overall framework and strategy for implementing similar private power or cogeneration projects in the United States and elsewhere, and drafting assistance for model Power Purchase and Thermal Energy Sales Agreements.

GRIRO RESPONSE

This assessment and recommendations were submitted to GRIRO for review in September, 1993. K&M and GRIRO personnel met in Bucharest in December, 1993, to discuss the K&M recommendations, but while GRIRO personnel agree with the K&M combined-cycle configuration recommendation, implementation of that option will be delayed indefinitely due to the following reasons:

- The availability of fuel for the combustion turbine has decreased since the report was initially released; and

- After discussions with the Romanian government, GRIRO cannot finance the proposed combined cycle power plant at this time.

Considering the options proposed by K&M and technical and financial constraints, GRIRO has selected a variation of option IB for implementation; three 25 Mt/h gas and oil fired boilers are to be installed and the existing 50 Mt/h boiler will remain in service. This option will meet the present and some future forecasted district heating demand, and, in addition, will allow room for the installation of the recommended combined cycle power plant at a future date.

I. K&M SUBCONTRACT TASK DESCRIPTION

This Final Report was prepared by K&M Engineering and Consulting Corporation under subcontract to RCG/Hagler, Bailly, Inc. This work was funded by the U.S. Agency for International Development (USAID) Eastern Europe Regional Energy Efficiency Program.

1.0 The GRIRO Project - Rehabilitation of Thermal Power Station

GRIRO S.A. specializes in the manufacture of heavy steel products: storage tanks, pressure vessels, heat exchangers, etc. primarily for the petrochemical industry. They are an international firm with over 50% of their products exported. GRIRO has had offices in the U.S. and regularly subcontracts to major U.S. engineering and construction companies. The firm carries a one to two year backlog of orders and earns the majority of its income in hard currency, of which it is permitted to retain a portion. The company participated in the original USAID-sponsored emergency energy assistance program and has since implemented most of the recommendations of that program, including the appointment of an energy manager trained under the USAID project. GRIRO is the only firm in Romania licensed under U.S. ASME code for the manufacture and repair of ASME-coded pressure vessels. It has a strong future and very high potential for export earnings. In fact, GRIRO has prospered over the past few years even though the general economy of Romania was in sharp decline, thus they have the capital and desire to make capital investments in their facilities.

The existing thermo-power station is of 1920's vintage with 6 Babcock & Wilcox boilers, one Romanian boiler, one Brown-Bovari steam turbine, and one Russian steam turbine. The B&W boilers and the Brown-Bovari turbine have all exceeded their useful life and need replacement. The Romanian boiler needs modification to burn fuel oil (only fuel gas now). The thermo-power station is unreliable and boilers are regularly shut down by state inspectors for maintenance. GRIRO commissioned a feasibility study by the state research agency ISPE (the state agency for design and research of power equipment) to develop several scenarios and possible design alternatives. The report was severely lacking in any insight outside of normal supply-side generation capacity, and in looking at the total picture of the thermo-station loads. The following factors need to be considered:

- The thermo-power station capacity is designed for thermal load-following operation in winter months. Power demand is not considered. In fact, one alternative is to generate only thermal energy and buy power from the RENEL grid. Selling of excess power is not considered.

- Forecasted capacity is based on current consumption plus assumptions for growth; no efficiency improvements are considered to mitigate installing additional capacity.

- Turndown capability is minimal. Large equipment of high capacity is recommended for ultimate future loads. Interim smaller loads are not taken into consideration.

2.0 Scope of Work

TASK 1 Coordinate team mobilization with RCG/Hagler, Bailly and review existing reports and documents available in Washington, DC.

TASK 2 Verify and update existing demand forecasts for both electricity and thermal energy used by the plant, and exported to other consumers. These demand forecasts need to reflect:

- Energy efficiency gains through application of low-cost/no-cost measures, energy efficiency equipment, and process energy efficiency improvement.

- Forecasted demand for export customers (power and thermal), also considering energy efficiency gains.

- Potential export (primarily power) sales and tariff barriers.

TASK 3 Undertake level of effort preliminary technical feasibility assessment of alternative cogeneration options with Romanian counterparts at the GRIRO Plant.

TASK 4 Equipment Referrals - Develop a comprehensive list of U.S. manufacturers that could supply U.S. manufactured equipment to GRIRO and assist GRIRO with coordination of RFQ's and exchange of information.

TASK 5 Develop alternative financing options.

TASK 6 Establish comparative ranking criteria and rank order of no more than four alternative cogeneration options.

TASK 7 Prepare preliminary list for turbine island, boiler island, and major mechanical balance of plant equipment identifying required changes or upgrading.

TASK 8 - Prepare Final Report highlighting findings and recommendations.

3.0 Deliverables

The following deliverables shall be accomplished under this subcontract:

- Draft technical feasibility report
- Draft comparative economic analysis of alternative plant configurations
- Summary of appropriate financing structures and potential sources of funds
- Preliminary equipment specifications for preferred option
- Final feasibility report

II. INTRODUCTION

1.0 Background

The USAID program in Romania is designed to foster the growth of national energy efficiency through the private sector by utilizing several avenues. One of these methods will be to provide assistance to a demonstration project in energy efficiency.

Romania faces many barriers to the adoption of industrial energy efficiency projects. As defined in the Industrial Profile Report completed under the Emergency Energy Assistance Program, these barriers include lack of capital for investment projects, technology, incentives, and sponsorship. While these barriers exist even today, much progress has been made within the country to set the stage for industrial energy-efficient investments. This progress has been most evident in the following areas:

- Energy Pricing - Energy prices for industry are now very close to world market levels, reflecting the realistic pricing of fuels by the energy sector utilities. This provides much of the needed incentive for industry to invest in energy efficiency.

- Privatization - The pace of privatization has increased and many firms are now functioning as private entities (even though the state may be the majority shareholder) responsible for their own destiny. This has put strong pressure on these firms to cut costs and become efficient.

- Reduced Central Government Controls - Along with the increasing pace of privatization, there has been a general slackening of government control over industry. Plant managers have more decision-making responsibility and retain a portion of profits for modernization and rehabilitation.

- Other - There still exists a lack of available technology, capital, and a proactive sponsor for energy efficiency. However, the situation is improving with more and more foreign companies entering Romania and seeking business arrangements. Likewise, more plant managers are seeking their own solutions and improvements without waiting for government direction.

This is an ideal time to provide the sponsorship, access to technology, and assistance with locating financing for a suitable demonstration project.

The GRIRO plant has been selected by the U.S. Agency for International Development (USAID) for a pre-feasibility study for the upgrading of the existing power plant. USAID has assigned the task of performing the study to RCG/Hagler, Bailly Inc., who has contracted K&M Engineering and Consulting Corporation. GRIRO is one of Romania's largest specialty manufacturer of pressure vessels and process equipment. They have made equipment and pressure vessels for use in plants in Romania and abroad for over 30 years. It is the only plant in Eastern Europe to have certificates of authorization from the American Society of Mechanical Engineers (ASME) for ASME U and U2 stamps, and can meet code requirements for Section VIII Divisions I and II for pressure vessels. GRIRO has had the ASME stamp authorization since 1986.

The plant was originally built in 1897 to repair locomotives. It occupies 97,500 square meters with 85,000 square meters of floor space. Production capacity is 16,000 metric tons per year; at present the plant operates at full production capacity with over 50% of the product exported. The product line includes heat exchangers, air coolers, reboilers, LPG tanks, debarkers for the pulp industry, and tanks for railway cars. The production equipment is generally very old, but includes many newer numerically-controlled machines.

The power plant located in the GRIRO facility produces electricity for GRIRO use, and in addition supplies central district heating to public housing and steam to nearby industries and a small hospital. The excess electrical energy, if available, is sold to the national electric system. The capability of supplying their own power and the need for district heating as well as the profitable operation of GRIRO has helped to keep the plant in operation, while many other similar Romanian industries have been forced to close down due to lack of business or energy shortages.

1.1 Electrical and Thermal Production Capacity

The power plant produces steam, hot water, and electricity from the boiler/turbine system. The original system capacity for the supply of district heating has been reduced due to equipment age and constant repairs to a point where the total capability of the district heating system is only 33 Gcal/hour. This is not sufficient to keep the required heat load to maintain the required temperature in the district heating system for the ambient conditions during the winter. The steam production during 1991 for GRIRO, nearby industries and the hospital was 86,387 tons. However, this demand is expected to diminish in the next few years. The electricity production capability is 7.6 MW, and GRIRO average shop normal consumption is 1.5 MW; however, with the electric furnaces in operation the shop demand is over 5 MW; the power plant usage is 0.8 MW. The balance is dispatched to the national electric system.

2.0 Objective of Study

The objective of the prefeasibility study is to review the actual conditions and study the possibility of increasing capacity by upgrading the existing equipment or by the installation of new equipment, permitting a more reliable and efficient operation that will guarantee a constant supply of district heating to public housing and ensure availability of electricity and steam to GRIRO and other users.

Several possible options have been considered in the study. The selected options have taken into consideration the forecasted thermal, electrical, and steam demand loads, as well as the maximum utilization of the existing equipment and the capability of the Romanian industry to furnish to a maximum extent the required equipment, keeping to a minimum the foreign components; this will reduce the need for hard currency that, at this time, is a problem in Romania. The availability and quality of fuels in Romania have been considered and recommendations are made on the fuels to be utilized or fuel treatment, if required. For the performance of the study, meetings with the fuel supply companies have taken place, as well as with the national electricity company and equipment manufacturers.

For the performance of the study, the following factors have been taken into consideration:

- The main purpose of the Power Plant is thermal heat production for district heating of approximately 10,000 apartments and electrical generation for the GRIRO facility. Any excess electricity output will be sold to the Romanian Electricity Co. (RENEL) grid.

- Maximum use of the existing equipment and facilities.

- The forecasted increase of district heating demand and improvements to the equipment used for district heating hot water production.

- Support the GRIRO and other users industrial steam demand.

The study, with the recommended options including support facilities, should be useful for the preliminary evaluation of the project by the multilateral and bilateral financial institutions interested in providing financing for the project.

K&M Engineering and Consulting Corporation and GRIRO power plant personnel assigned to the study have exercised their best professional judgment in accordance with technical practices normally followed in the preparation of this study. This study is based in part on information and data collected from K&M field visits to the GRIRO plant in Romania and meetings with the Ministry of Industry, the Bucharest Gas Company, and the Romanian Electricity Authority. It should be recognized, however, that the concepts and outline presented in this study must be verified during the preliminary detailed design stages and during the preparation of the final feasibility study.

III. NEED FOR THE PROJECT

1.0 Existing Facilities

Information on the design parameters of the existing equipment or piping and instrument diagrams for the plant systems are not available. The existing equipment characteristics and other information used for this study have been supplied verbally by GRIRO personnel, and the conditions of the equipment are based on site observations by K&M personnel who participated in the audit of the GRIRO power plant.

From the discussions held with the plant personnel, the main problem areas within the power plant were identified and the key problems related to energy efficiency were presented. The areas identified were as follows:

- Low gas and oil availability
- High percentage of sulfur in the available oil
- General age of equipment and loss of efficiency
- Combustion control of boilers
- Replacement of decommissioned equipment

The facility personnel are technically competent and aware of the plant's primary operational inefficiencies. They are also in a good position to gauge project potential given the factors of production such as labor costs, material costs and the long-term business plan. In addition, they can provide technical information required make long-term energy efficiency decisions such as the replacement of boilers or incorporation of new, more efficient equipment. The main areas that the study addressed were:

- Central Steam Boiler Area
- Turbine/Control Room Area
- Water Treatment Facility
- Cooling Towers
- Air Compressors
- Switchgear and Transformers
- Pumps Room

2.0 Existing Capability

The existing capability of electricity production of the power plant is 7.6 MWe. Of this capacity, the GRIRO facility uses an average of 1.5 MW. However, with the three furnaces in operation, this consumption can be 5 MW to 6 MW; but this is not the normal operating mode. The power plant consumes about 0.8 MW and whenever possible, the excess electricity is sold to the national grid.

One of the main problems at this time is the capability of the existing facilities to meet the required thermal demand for the district heating for public housing. With the decommissioning of the 13 Mt/h boilers and the reduced capacity of the heat exchangers due to the high number of plugged tubes that have reduced efficiency, it has been very difficult to maintain the required temperature during the winter. The maximum capability at this time is 33 Gcal/h, which is not sufficient to maintain the required water temperature needed for the severe winter conditions.

The typical weekly thermal and electrical energy production for winter is shown in Figure I (Page 77) and for a summer week in Figure II (Page 78). Based on the conditions outlined in Table II (Page 68) (ambient versus district heating temperature), on a winter day, ambient temperature (-8°C), the required district heating temperature of 124°C and a flow of 621 m^3/h cannot be maintained with the existing equipment.

The plant operates 24 hours per day, 7 days per week. The main areas of energy use include the central power station, the forging area, and the foundry area. The equipment in these areas of highest energy use is generally very old with few direct controls.

The present major equipment in the thermal power station is shown in Table I (Page 65) and a diagram shows the existing equipment arrangement in Figure III (Page 79). Most of the oil and gas is consumed in this area of the plant. There are seven boilers located in the boiler area. Six of the seven are 13 Mt/h Babcock and Wilcox boilers built in 1929. Four (4) of these 13 Mt/h boilers are no longer in service, while the remaining two have been repaired; the conditions of these boilers is very poor and under normal circumstances they would be decommissioned; however, repairs are being performed as a temporary solution. The seventh boiler is a 50 Mt/h Romanian boiler built in 1965. They all feed a common steam header with steam at 450°C and 30 atm. The steam is directed to two turbines rated at 1.6 and 6.0 MW. The 1.6 MW turbine is a Brown Boveri turbine, built in 1929, and provides extraction steam for process use. The 6.0 MW turbine is a Soviet built turbine. The maximum total fuel used by these boilers is 20 Mt/day of oil or 12,000 cubic meters per hour of gas. The central steam boiler area provides steam for the turbines for electrical production and for thermal energy requirements. The age of the boilers is a major concern. The Babcock and Wilcox boilers average about 100,000 hours of operation while they are only rated for 35,000 hours. Therefore, replacement of these boilers should be seriously considered. Like the South Bucharest Plant, GRIRO has problems with oil residuals collecting on the piping of the steam boilers. Once a year the staff chemically cleans the pipes to reduce the oil residuals.

In addition to the turbines, there are two paths of steam pressure reduction for low pressure process steam used in pressure vessel testing and oil heating. The steam pressure is reduced from 30 atmospheres to either 14 atm or 7 atm. These reduction valves also provide thermal energy for the district heating system if the turbines are not in operation. The typical consumption of low pressure steam through this system path is 3 to 4 Mt/h.

Other low pressure steam is available at 3 to 5 atmospheres from the turbines. This steam is used for heating the plant and to heat a nearby hospital. The normal consumption in the winter for this steam is 10 metric tons/h.

The plant has three heat exchangers that use the steam extracted from the turbines to heat water for use in the district heating system. The condensate from these exchangers is returned to the deaerator before returning to the boiler feed water flow.

A simplified schematic of the electrical connection between the plant's system and the national electrical system is shown in Figure IV (Page 80). The two turbines produce power at 5 kV and the national system that they are connected to uses 10 kV. Therefore, there are two 4 MVA transformers to make the connection. The system allows the plant to run on its own electric power, that of the national system or both. It also permits the electric power produced to be sold to the

national system.

Most of the electricity consumed by the plant is used in the foundry area. The foundry has two electric arc furnaces and one electric induction furnace. The capacity of each arc furnace is 1.5 metric tons/h of steel and they consume a maximum of 1 MW of electricity each. The induction furnace has a capacity of 1 metric ton per hour, also with a maximum demand of 1 MW.

The other major electrical equipment includes four high pressure air compressors with a maximum power consumption of 300 kW each. The air compressors are three stage and three cylinder reciprocating compressors that can deliver 45 m^3/h. There is also a 40 year old Ingersoll-Rand air compressor that is rated for 30 m^3/h at 150 kW. The air delivered by these compressors is at 7 atm of pressure and is used for the testing of pressure vessels, pneumatic controls and to supply air to the GRIRO shop and power plant. The other electricity-using equipment such as fans and pumps consume an additional 1 MW total.

Water treatment for the boilers is also a problem. City water is demineralized by a system that uses sulfuric acid (H_2SO_4). In addition to the city water, water supply is guaranteed by one 28 m^3/h and three 13 m^3/h wells. The system is limited because there is a shortage of supply of H_2SO_4. Tests are performed every hour to determine if the system needs to be flushed.

Steam Turbines/Control Room

The turbines and control room are very old. The 1.6 MW Brown Boveri (BB) steam turbine was built in 1929 and should be decommissioned. The 6MW Russian turbine, installed in 1965, is in good condition and is well maintained.

The 1.6 MW BB turbine is an extraction and condensing turbine. Circulating water cooling during the summer is provided by three existing forced draft cooling towers, two with the capacity of 500 m^3/h and the other 800 m^3/h. At the time of the survey of the power plant, one of the 500 m^3/h cooling towers was being repaired to like-new condition.

The 6 MW steam turbine is an extraction turbine; extraction steam is used for district water heating. See Figure III (Page 79).

The control room instrumentation is very old and obsolete. A detailed study of possible upgrading will be required to determine the need to replace some of the components.

Electric Load

There is about 5 MW of connected electrical load within the GRIRO shop; however, about half of this load is used for intermittent operation of the electric furnaces in the foundry. The average plant load is 1.5 MW. The power plant consumes 0.8 MW.

Some of the system changes that can be justified with an energy profile of the existing air compressors include using appropriate controls, using separate compressors to supply the low pressure air required in the plant instead of using reducing valves, replacing some of the pneumatic equipment with electric motors, using the waste heat from intercoolers and aftercoolers, and developing a maintenance program to detect and repair air leaks. The efficiency increase from just one of these measures would be significant.

3.0 Forecasted Thermal and Power Demand

The 1990 total energy production of the GRIRO cogeneration plant is shown in Figure V (Page 81). The electrical consumption of the GRIRO factory will remain at the present level for the next few years; however, it is anticipated that the thermal production will have to be increased to permit the needed improvement on the district heating system temperatures and the continuously increasing load demand.

Below is the forecast for the requirements for district heating and steam:

Steam		Mt/h Maximum	Mt/h Medium	Mt/h Minimum	Mt/y Annual
TOTAL	1992	93.9	50.2	30.1	86,387
	1996	34.7	19.08	10.7	35,000
Hot Water (GCal/h)					
TOTAL	1992	44.25	30.16	10.7	183,572
	1996	69.25	42.8	9.5	250,000
Residential	1992	25	17	9.6	127,154
	1996	50	30	8	186,038

Although the power demand the GRIRO factory is not forecasted to increase in the near future, the excess electricity production can be sold to RENEL for the national grid. The new Romanian government policy of removing all subsidiaries has allowed the increase of electricity sale price to a point that GRIRO-produced excess electricity can be sold to RENEL at a profit.

The need to increase thermal output to meet the growing district heating demand is a primary objective of this study. However, increased electricity production while meeting the thermal demand will be an additional benefit, especially considering the need for additional efficient electricity production in Romania. Many of the country's power plants are very old and inefficient and in need of replacement. RENEL, the state-owned utility, is very interested in the possibility of increasing the electrical production capability of GRIRO and in purchasing any excess electricity produced by the GRIRO power plant.

As shown in the above table, it is anticipated that the steam demand of the industry and the hospital will diminish within a few years. The forecast is as follows:

Steam Demand (T/Yr)

1991	1996
86,387	35,000

Power Factor

The power factor for the facility is generally between 84% and 90%. The structure of the electric rate specifies a penalty to be paid to the electric agency when the power factor is below 94%. The staff do not consider this a problem because GRIRO is a producer of power; they do not always have to pay this penalty and can regulate the power factor with the generators. They do have reactive capacitors for transformer stations and for some larger equipment such as the air compressors. There is opportunity to further improve the power factor throughout the plant.

IV. TECHNICAL FEASIBILITY

1.0 Availability and Quality of Fuels

One of the main problems that limits the number of possible options to upgrade the GRIRO power plant is the availability and quality of the fuels being used at GRIRO. The ideal would be to use natural gas; however, this fuel is only available at very low pressure and in limited quantities. In some cases during the winter, the gas pressure is below one atmosphere. During the time of low gas supply, oil is burned in the boilers. At this time, only the 13 t/h boilers are dual fired with gas or oil; the larger 50 t/h boiler can only burn gas although GRIRO has taken steps to incorporate oil burners in this boiler. The use of oil creates a problem because none of the existing boilers are equipped with soot removal equipment, and this operation has to be performed by hand.

The following are the characteristics of the oil available at GRIRO.

Type 70/425

Viscosity	
at 50°C max.	70
at 80°C max.	12
Freezing Point, °C	42
Flash Point, °C	90
Sediment, % max.	1.2
Suspended Solids, % max.	1.5
Ash Content, % max.	0.5
Sulfur, % max.	3.3
Heating Value, KJ/Kg	38600
Vanadium, ppm max.	100
Sodium, ppm max.	150
Water, % vol. max.	1

Oil is burned in the boilers for approximately 1000 hours a year during periods of low gas availability; oil is received at the GRIRO shop by railway and stored in tanks; new tanks are being built for additional storage. Figure VI (Page 82) shows the yearly fuel and energy consumption of the GRIRO power plant.

One of the options considered in this study is the installation of combustion turbines at GRIRO. The presently available fuel oil cannot be used as fuel in combustion turbines due to the high vanadium, solids, and sulfur contents, thus prior cleaning will be required. The cleaning of fuel oil is a fairly new technology that is being developed and one of the drawbacks is the high cost of the process. K&M has studied the possibility of cleaning the oil used at the GRIRO facility to permit operation of the proposed combustion turbines; the study indicates that the high cost of fuel cleaning will not permit an economic operation of the facility.

The limited availability of gas is a major problem. This fuel is ideal to use in combustion turbines; however, the low pressure will have to be increased to the required pressure to permit injection into the combustion turbine combustor.

During the survey, the K&M team met with managers of ROMGAZ, the government company controlling the gas supply to Bucharest, to review the possibility of increasing the volume and pressure of gas available to the GRIRO facility. At these meetings, several possible solutions were discussed. Figure VII (Page 83) shows the Bucharest gas distribution loops; the inner loop receives gas at different points from an outer loop. The distribution station close to GRIRO, 16 of February station, is a pressure reducing station, and in theory the outer loop

pressure should be between 6 to 40 bars; however, very rarely it is over 10 bars and the inner loop pressure is usually no more than 2 to 6 bars.

The possibility of installing a compressor station at 16 of February to increase pressure to the average 20 bar required by gas turbines was discussed. This idea was rejected by ROMGAZ, as this type of installation will absorb all available gas to other users and is not practical. Another idea that will require further research is the installation of a compressor station in the vicinity of 16 of February reducing station, taking suction from the outer loop to a dedicated gas line of approximately 10 km to the GRIRO plant. This concept will require additional studies beyond the scope of this report.

The gas available to the GRIRO facility is as follows:

Winter	**Summer**
150,000 m^3/day	100,000 m^3/day

Of the above, about 25% is used by the GRIRO manufactures shop and the balance by the power plant.

Based on meetings with ROMGAZ and GRIRO personnel, we have assumed that gas will not be available to fuel the combustion turbines, however, for the additional firing of the heat recovery steam generators, low pressure gas and heavy fuel oil have been used in the technical and economic analyses.

The General Manager of the Ministry of Industry & Material Resources identified a light automotive diesel oil derivative which could be an acceptable fuel source for gas turbines. This fuel has been used in the economic evaluation.

The price of diesel fuel utilized in K&M's economic evaluation of the various alternatives was 48.64 U.S. cents per gallon which approximates the average world price for fuel oil utilized by industrial utilities in most parts of the world today. In addition, K&M learned that a possibility exists for GRIRO to purchase this oil direct from the refinery with up to a 10% discount over the distribution price. However, this possible discount was not utilized by K&M in its analysis of alternatives.

Two (2) new fuel oil storage tanks are presently being erected - one has a capacity of 1000 metric tons and the second one has a storage capacity of 700 metric tons.

2.0 Options to be Considered

Several options are available to improve the performance of the GRIRO power plant. Each of these options involves different levels of modernization and capital investment. From the base case of upgrading only the equipment necessary to permit a more reliable operation, keeping the present thermal and electrical output without consideration for future growth, to the optimum case of increasing the output to meet the future district heating load forecast and at the same time increasing the electrical output to permit the sale of excess electricity production to RENEL, these options all satisfy the performance improvement requirements and provide a range of additional benefits.

Three general options to cover the possible variations have been studied:

Option I - Base Case Modernization

Option II - Thermal and Electric Expansion

Option III - Thermal and Electric Expansion Utilizing Gas/Oil Fired Combined Cycle Cogeneration Plant

The proposed options optimize the use of existing equipment; however, some of this equipment is very old and inefficient and will have to be upgraded or replaced regardless of the option selected. This equipment is described below. A more complete study will be required to determine, in detail, the equipment conditions prior to implementation of the recommendations. Additional recommendations are given in Section 5.4.

Steam Generators

- Provide permanent oil burners on existing 50 t/h boiler.
- Provide state-of-the-art boiler controls.
- Replace boiler tubes where necessary.
- Perform a study of the possibility of providing soot blowers and if possible install the required equipment.

Steam Turbines

- Upgrade the 6 MWe and 1.6 MWe steam turbines by providing state-of-the-art instrumentation.

Motor Control Centers and Control Room

- Replace motor control centers.
- Upgrade control room instrumentation.

District Water Heat Exchangers

- Replace with new equipment, regardless of the selected option. The new heat exchangers should be sized for the forecasted thermal demand of the district heating system.

Water Treatment System

- Provide a flow orifice to measure flow of demineralizer discharge.
- Update boiler make-up water treatment.

Cooling Towers

- Underground piping needs replacement.
- Repair cooling towers.

Miscellaneous Pumps

- Boiler feed pumps and drivers are in good condition, however instrumentation needs to be upgraded.
- Replace fuel oil pumps.
- District water heating pumps are in good condition, however instrumentation should be upgraded.
- Review in detail the condition of small pumps and repair or replace as required.

Control Valves

- Replace steam pressure reducing valves supply to industrial steam and testing facilities.

Miscellaneous Buildings

- Most of the buildings are in very poor condition. In some areas, the concrete has deteriorated to the point where the rebar is exposed.

- General housekeeping requirements should be improved.

3.0 Analysis and Discussion of Options

A review of the different standards covering environmental regulations for power plant emissions indicate that for the considered options no equipment for removal of sulphur will be required due to the size and the short period of time that the facility will be using oil, 1000 hours per year.

3.1 Base Case Modernization - Option I

3.1.1 Option IA

Sketch 1A (after page 129) shows this case. One new 50 Mt/h boiler will be installed to replace the six - 13 Mt/h boilers that will be decommissioned. This boiler will be capable of producing steam at 30 bar, 450°C. The output of this option is approximately the same output of the existing facility; no improvement on electrical or thermal output from the present facility will be obtained. The only advantage will be a more modern updated facility with a better plant efficiency.

This is the option with the lowest capital cost, however with the least flexibility to meet the demand; a failure of one of the boilers will reduce the thermal output by fifty percent (50%), where it would be very difficult to meet the demand if failure occurs during the winter.

With limited economic resources, this is a good option. However, the risk of equipment failure and the incapability of meeting the forecasted thermal demand should be considered in evaluating this option.

3.1.2 Option IB

This option, as well as the previous, considers the removal of the six existing 13 t/h boilers. Two 25 Mt/h boilers capable of burning gas or fuel oil will be installed. The thermal and electrical output will be similar to Option IA; however, additional flexibility for operation will be added to meet the demand during the winter or in case of boiler failure. Sketch 1B shows a diagram of this option.

The capital cost will be higher than the previous case, the only gain being the additional operating flexibility. As in the previous option, the existing upgraded

balance of plant equipment will be utilized with no change to the operating characteristics.

3.2 Thermal and Electric Expansion - Option II

The capital cost will be higher than the previous option. The fuels to be utilized will be similar to the ones in use today, with slightly higher consumption.

Sketch II is a diagram showing the arrangement of the equipment. Two new 55 Mt/h boilers burning gas or oil will be installed to replace the six 13 t/h decommissioned boilers. This option will increase the capacity of the power plant to 160 Mt/h, an increase of 32 Mt/h over the original capacity of 128 Mt/h; this additional capacity will permit an increase of the thermal output to meet the forecasted demand. In addition, the higher electrical output will permit the sale of electricity to the RENEL grid. The new boilers can be installed in the existing boiler room. A new 17.3 MWe steam turbine generator will be installed to replace the existing 1.6 MWe steam turbine generator that will be retired from service; some minor changes to the existing balance of plant equipment will be required for this option, a complete detailed study will be required to assess these changes.

3.3 Thermal and Electric Expansion Utilizing Gas/Oil Fired Combined Cycle Cogeneration Plant - Option III

Two different cases utilizing combustion turbines and heat recovery steam generators are considered under this option. For either case, a new fuel will be necessary for gas turbine operation. The low availability and pressure of gas does not permit consideration of this fuel for these options, and the fuel oil being utilized at this time is not compatible with the turbine operating conditions due to the high vanadium and other impurities.

3.3.1 Option IIIA

This option considers the installation of a single combined cycle power plant to be located in the existing boiler room; to allow the space required for this equipment, five of the 13 ton/h boilers will be decommissioned, keeping the existing 50 Mt/h boiler and one of the existing 13 Mt/h boilers as back-up in case of failure of the combined cycle cogeneration power plant.

The proposed gas turbine has a capacity at ISO conditions of 33 MWe. The turbine exhaust will discharge to a heat recovery steam generator (HRSG) producing 53 Mt/h steam at 30 bar, 410°C without supplementary (duct) firing. With partial supplementary firing at 550°C, steam performance of 70 Mt/h, 30 bar, 450°C is expected, and with full firing at 850°C, approximately 100 Mt/h (450°C) of steam will be possible.

The additional supplementary firing of the heat recovery steam generator will be required during the periods of high thermal demand. For this use, the existing gas supply or available fuel oil can be utilized; the steam conditions will permit the installation of a new 21.2 MW steam turbine generator, increasing the total electrical production capability to 49.0 MWe during the winter.

One of the problems with this type of installation is the removal of heat during the periods of low demand since the thermal output will be higher in winter than in summer; however, with the introduction of steam into the combustion turbine, this presents an advantage; steam injection (STIG) increases the combustion turbine output. In this case, during the summer the combustion turbine with steam injection will generate 51.9 MW of electricity, and the steam injection will control the NOx discharge into the atmosphere to acceptable limits. During the summer with the combustion turbine operating on STIG mode with supplementary firing on the HRSG and the two back-up boilers in operation, the total electrical output of the power plant will be 73.1 MWe.

This option meets all the ideal conditions, covers the present and forecasted district heat demand and, in addition, will permit the sale of 41 MW during the winter and 63 MW during the summer of electricity to the RENEL grid after covering the GRIRO manufacturing shop demand. Sketch IIIA shows the diagram for this option.

Experience has shown that the availability of this type of installation is over 95%; however, due to the critical service of district heating and hot water to approximately 10,000 apartments, we recommend that the existing 50 Mt/h boiler and one of the 13 Mt/h boilers be kept as a back-up in case of failure of the combustion turbine; this equipment will meet the average demand in a typical winter day.

The economic analysis will reflect the higher fuel price needed for the operation of the combustion turbine and the benefits obtained by the sale of electricity to the RENEL grid, as well as the additional revenue from the forecasted district heating demand.

3.3.2 Option IIIB

This option considers the installation of a combined cycle power plant utilizing two combustion turbines, each with a heat recovery steam generator, and the installation of a single new steam turbine generator.

Each of the proposed gas turbines has a capability of 13 MWe without steam injection and 16.0 MWe with steam injection; the total electrical output during the summer will be 33.0 MWe. Supplementary duct firing will be required to meet the winter thermal output. Similar to the previous option, the existing gas and fuel oil can be utilized for the duct firing to meet the additional heat demand. A new 17.0 MWe steam turbine generator will be installed; the total plant electrical output for this option will be 49.7 MWe during the winter and 65.1 MWe during the summer.

4.0 Recommended Option

CAPABILITY OF CONSIDERED OPTIONS				
Option	Equipment	Steam Production*	District Heating Product* (See Note)	Electrical Output MWe Winter/Summer
1A	2 - 50 Mt/h boilers	100 Mt/h	77 Gcal/h	7.6
1B	1 - 50 Mt/h 2 - 25 Mt/h boilers	100 Mt/h	77 Gcal/h	7.6
II	1 - 50 Mt/h 2 - 55 Mt/h boilers	160 Mt/h	77 Gcal/h	15.9/21.3
IIIA	1 Combustion Turbine 1 - 50 Mt/h 1 - 13 Mt/h boilers	163 Mt/h	77 Gcal/h	49.0/71.7
IIIB	2 Combustion Turbines 1 - 50 Mt/h 1 - 13 Mt/h boilers	163 Mt/h	77 Gcal/h	49.7/65.1

*Winter -8°C ambient temperature.

Note: Assumes fixed output to meet demand, higher output available for Options II, IIIA and IIIB if required.

4.1 Discussion and Recommendation

As previously mentioned, Option I A and Option I B will not increase the thermal output of the power plant; the only advantage will be the higher reliability obtained by installing new equipment and upgrading the existing 50 Mt/h boiler. The electrical generation will be the same with a very little possibility of selling energy to the RENEL grid. This option has the lowest capital cost of all the considered options and should be implemented only if financing for a larger expansion is not available.

Option II will increase the electrical capability of the existing power plant by 13.7 MW and will cover the forecasted thermal demand. The additional electrical energy will be sold to the RENEL grid. The capital cost of this option is higher than Option I A or I B and will be a good solution if financing is the limiting factor.

Option IIIA meets the existing demand and allows for future growth of district heating demand. In addition, this option will permit the highest sale of electricity to RENEL, 41 MW during the winter and 63.7 during the summer, allowing 5 MW for GRIRO use. This option meets the technical and economic conditions and it is our recommendation that this option be implemented. The technical characteristics of this option will permit an excellent flexibility of operation

through all operating ranges; district heating and steam outputs versus electrical outputs can be controlled to obtain the most efficient operational mode under all conditions.

Option IIIB offers more operating flexibility and reliability; however, this is the only advantage. Electrical output and internal rate of return on the investment are lower than Option IIIA; taking into consideration that the availability of combustion turbines is over 95%, additional operating flexibility cannot offset the advantages offered by Option IIIA.

4.2 Plant Description and Features

4.2.1 Configuration

The combined cycle power plant will be housed in the existing GRIRO boiler building, in the area occupied by the 5-13 Mt/h boilers being demolished at this time. The existing 50 Mt/h boiler in the southwest corner and the 13 Mt/h boiler in the northeast corner will remain in operation. A wall dividing the existing boilers from the new combustion turbine will be built inside the building prior to the start of erection of the turbine.

The building will have to be upgraded and repaired prior to the erection of the combustion turbine; the general arrangement Drawing No. G001 shows the arrangement of the new facility.

The new 21.2 MW steam turbine generator will be erected in the turbine building to allow space for the new turbine pedestal; the existing turbine pedestal in this area and the 1.6 MW turbine pedestal will have to be demolished. The general arrangement drawing shows the proposed location of this pedestal.

The existing control room will have to be upgraded to house the required controls and instrumentation for the new facility and air conditioning will have to be installed.

The equipment has been sized according to the following criteria:

- Thermal load and output
- Appropriate combustion turbine capacity availability to match the thermal load
- Optimum use of the existing facilities
- Economic optimization based on benefit - cost analysis
- Plot area constraints
- Availability of water
- Environmental considerations

An important consideration in sizing the plant has been the selection of commercially available gas turbines. A manufactured standard product has been selected to obtain the cost benefits of the procurement process and to meet the target schedules for delivery of equipment.

The most critical constraint in selecting the equipment has been the space availability; no additional space is available at the GRIRO facility.

The combined cycle facility is a low cost, efficient process for generating power and meeting the thermal demands. Additional advantages of the combined cycle include:

- Higher generation efficiency than steam plants
- High ratio of power output to occupied ground space
- Rapid start-up capability
- High reliability
- Good operating flexibility from minimum and maximum loadings

The recommended combined cycle facility offers the latest power plant technology with very high efficiency and reliability. Proper operation and maintenance of the facility is a decisive factor on the availability of the power plant. The personnel assigned to operate the combustion turbine should be highly trained in operations and maintenance. It is recommended that this personnel be trained for several months on an existing, similar facility prior to start-up of the combustion turbine.

Spare parts for several years of operation should be purchased with the original equipment; all spare parts for the combustion turbine and related equipment shall be purchased from the original manufacturers and no substitutes should be accepted.

4.2.2 Mechanical Systems

4.2.2.1 Combustion Turbine Generator (CTG)

The combustion turbine will be a conventional machine in the 33.1 nominal class. This sizing was selected to achieve a facility that best integrates with the existing building and equipment. This design results in an excellent thermal match while effectively utilizing the existing facilities, thus resulting in the lowest installed capital cost on a per kW basis.

The gas turbine will normally operate on light oil, utilizing heavy fuel oil and gas for the duct firing. Emissions of NOx will be controlled using low NOx combustion technology to a level of 25 ppmvd when firing

natural gas. When operating on distillate fuel, water injection will be employed to limit NOx emissions to not more than 75 ppmvd.

4.2.2.2 Steam Turbine

The steam turbine to be added at the power plant will be a 21.2 MWe combination extraction and condensing turbine, with throttle steam at 30 bar and exhausting at 0.06 bar for maximum thermal output.

The complete steam turbine generator package will include the throttle valve, speed regulator, controlled extraction valve, and uncontrolled exhaust to the condenser. The steam header, generator, lube and seal oil system is cooled by a circulating glycol solution.

4.2.2.3 Heat Recovery Steam Generator

The HRSG will be a duct fired, single pressure, natural circulation boiler. The high pressure (HP) steam will be generated at 30 bar and 450° C. The feedwater to the HP boiler will be preheated by a low temperature economizer and then a high temperature economizer.

The HRSG system is comprised of: the inlet duct from the CTG, the transition piece that increases to the full cross-section of the HRSG, superheater coils, duct burner assembly, high pressure steam drum, evaporator coil, high pressure economizer, and exhaust stack.

The HRSG is a natural circulation boiler, insulated to maintain heat losses to 1% or less. The blowdown from the HP steam drum is flashed in the continuous blow-down drum, the steam passes to the deaerator and the liquid flows to the atmospheric blow-down drum before being dumped to drain, after being cooled by make-up water.

The boiler tubes are finned to maximize heat recovery.

The HRSG stack height is governed by a number of factors including: local topography, building heights, prevailing wind directions, and permissible ground level concentrations of pollutants. It is likely to be 60 meters in height.

5.0 Major Equipment Preliminary Specifications

The following preliminary specifications do not include all the necessary information to request firm prices from the manufacturers, and are issued only with the purpose of obtaining preliminary pricing for the preparation of the final feasibility study prior to project implementation.

In order to obtain final firm prices from the manufacturers, additional information will be required on the detailed scope of the project, and preliminary detailed design information beyond the scope of this study will be required.

5.1 Combustion Turbine Generator

5.1.1. General

The project will include furnishing and erecting a complete combustion turbine directly coupled to a 50 Hz generator. The combustion turbine generator shall deliver approximately 33,000 kW at ISO conditions. (15°C - sea level).

The combustion turbine generator shall be designed for continuous operation with a fuel oil (which is available in Romania) of the following chemical characteristics:

Specific gravity at 20°C, max.	0.870 kg/liter x 9.8 m/s^2
Flash point, °C, min. 55	
Viscosity (kinematic), 10^{-4} m^2 e^{-1} (cSt)	4.5 - 6
Pour point °C	-15
Sediment	No
Water content % max.	0.03
Ash content % max.	0.01
Carbon %, max.	0.2
Total Sulphur content %, max.	0.25
Neutralization number mg KOH/100 cm^3, max	8
Lower heating value kcal/kg, min. 9900	

The combustion turbine exhaust will be discharged to a heat recovery steam generator to produce cogeneration steam to drive a 21.2 MW combination extraction and condensing steam turbine generator; the combustion turbine exhaust flow temperature as rated should be no less than 438°C at ISO conditions. Additional duct firing of the heat recovery steam generator will be required during the time of high thermal demand.

5.1.2 Electrical Power Requirements

- The CTG shall be suitable for continuous operation. High CTG reliability and availability under intended operating conditions are extremely important and will be major factors in the evaluation. Unit thermal efficiency should not detrimentally affect operating reliability.

- If while carrying load, the CTG unit is disconnected from the power grid, the CTG controls shall automatically re-adjust to the zero load setting, or trip and lock-out if a fault condition generated the trip. The CTG can be selectively shut down manually or resynchronized with the grid, if required. The generator breaker shall enable resynchronization of the plant after main line voltage is restored.

- The plant equipment life shall not be less than 20 years and shall be designed to operate continuously at maximum continuous rating, high efficiency and reliability.

- The design, construction, and operation of the CTG plant with regard to aqueous discharges, emissions, noise levels etc. shall be subject to constraints imposed by the national or local laws and regulations of the relevant authorities of Romania and in accordance with the World Bank environmental guidelines.

- The power station operational mode, site conditions, and electrical equipment design conditions shall be considered in equipment selection and design.

5.1.3 Sound Levels

The gas turbine generator shall be provided with silencing equipment so that the sound pressure levels do not exceed the local requirements:

Octave Band	Center Frequency-Cps	Sound Pressure Level db at 122m	Optional (See Note) S.P.L. db at 122m
1	31.5	76	73
2	63	73	70
3	125	65	61
4	250	58	53
5	500	53	48
6	1000	49	44
7	2000	46	41
8	4000	43	38
9	8000	40	34

NOTE: A price change for the supply of the plant to meet the optional Sound Pressure Level (SPL) figures given above shall be stated.

5.1.4 Safety

- The CTG manufacturer shall, prior to the shipment, insure that all safety measures and protective devices function.

- Rotating Components

  All exposed rotating components shall have suitable guard covers designed to prevent accidental contact. The guard covers shall be substantially constructed, securely fastened in place, and shall be easily removable for maintenance purposes.

- High Temperature Surfaces

  High temperature surfaces shall be covered with insulating material for personnel protection.

5.1.5 Combustion Turbine Generator

- The combustion turbine exhaust should discharge to a heat recovery steam generator to produce steam to drive a 21.2 MW combination extraction and condensing steam turbine generator. The heat recovery steam generator will have provisions for additional duct firing; the duct firing should be dual, gas or oil.

- Control of the CTG and auxiliary systems will be accomplished

from an existing climate controlled, weather tight central control room in a building provided by the Owner.

- The CTG will be installed indoors in a existing building.

- A steam injection system for power augmentation shall be supplied; the steam injection module should contain metering and shut-off valves and be self-contained on its own base plate. The vendor shall furnish all the required piping, valving, wiring and instrumentation.

- Based on a survey of the existing building, the vendor shall propose the ventilation and air intake system.

- Each rotating equipment compartment shall contain optical fire detectors and rate of rise temperature detectors to protect the equipment.

- The vendor shall furnish a complete instrumentation package, subject to Owner's approval, that will protect the entire combustion turbine and permit continuous monitoring of the operating equipment conditions.

- The vendor shall provide ladders, stairs, and platforms which meet the Romanian safety requirements for access to the equipment.

- The vendor shall provide a list with pricing of the recommended spare parts for five years of operation.

- The vendor shall include in his quotation the necessary training in a similar operating unit of the required GRIRO S.A. personnel for maintenance and operations of the GRIRO S.A. combined cycle power plant.

5.1.6 Overall Responsibility

- A single Contractor could be retained with overall responsibility to provide engineering coordination of combustion turbine, generator, switchgear, and any mechanical components. The Contractor has the responsibility for the operational mechanical integrity of all equipment. He would handle and expedite drawings, supervise, and coordinate all tests as they pertain to the CTG package as required.

- Electrical apparatus, equipment, devices and wiring shall be suitably enclosed in vermin-proof enclosures.

- The Contractor should carry out the Protective Relaying System Coordination with GRIRO S.A. and the Romanian Electricity Authority; and the Electrical Systems Stability Study to ensure that the new generating units shall operate successfully in parallel and that no adverse stability problems shall arise from their introduction onto the Romanian Electricity Authority grid system.

- The gas turbine generator should be capable of performing 300 starts/year for 20 years for a lifetime total of 6000 starts.

- The unit should be capable of rapid start and shall have black start capability.

- Vibration monitoring system (Bentley Nevada proximity type or equivalent) should be provided. Each bearing, including gear and generator, shall include multiple sensors. Under unfiltered and steady state conditions, the normal running velocity levels shall typically be less than 0.64 cm/sec., with alarm at 1.27 cm/sec. and trip at 2.54 cm/sec. Under transient conditions, the vibration levels shall not exceed 1.0 cm/sec.

- The critical speeds of the rotor assembly shall be at least 20% above or below the operating speed of the unit.

- The smoke density of the turbine exhaust shall not exceed the ASTM-D-2156 Smoke Spot (Bachrach) Number 4.5.

5.2 Heat Recovery Steam Generator

5.2.1 General

The project will include furnishing and erecting a vertical single pressure heat recovery steam generator designed to remove heat from the combustion turbine exhaust and generate:

- Steam for power production in a steam turbine generator.

- Steam for power augmentation in the combustion turbine.

Provisions for partial and full duct firing using fuel oil or gas shall be incorporated in the design.

Due to the reduced space available for the HRSG in the existing building, the design should minimize the floor surface area occupied by this equipment; drawings showing plans and elevations shall be provided with the proposal.

The approximate CGT exhaust conditions under rated power of ISO conditions are:

- Exhaust Flow - 447.0 x 10^3 kg/h
- Exhaust Temperature 438°C

- The vendor shall furnish the thermal production capability of the heat recovery steam generator at 30 bar, 450°C using partial and full duct firing, and the pressure and thermal production capability steam pressure and temperature without duct firing.

- The vertical HRSG heat absorbing sections will be contained within shop assembled ductwork/casing modules. Each module shall incorporate pressure parts and interconnecting piping, baffles, insulation, liners and ductwork casing; the modules will minimize the field erection time. The HRSG shall be complete with the following:

  - All heat transfer and pressure parts
  - Inlet and outlet duct
  - Necessary expansion joints
  - Self supporting exhaust stack including electric grounding
  - Steel drums, water columns, gauges, glasses, level indicators and all the required instrumentation, local and in the central control room
  - Pressure, temperature and flow transmitters
  - Deaerator
  - Desuperheater assembly
  - Platform ladders and stairs
  - All piping, from valves and instruments for safe and reliable operation of the boiler
  - Safety relief valves and silencers

- All steam drums will be welded construction, fabricated from carbon steel plate and equipped with manways at each end. Drum internals shall include primary centrifugal steam separators and secondary Chevron-type steam dryers to provide suitable steam purity. The steam drums shall be provided with internal distribution piping for feedwater, blowdown and chemical feed. The steam drums shall be completely insulated on the outside.

- The furnished HRSG shall be a conventional natural circulation evaporator requiring no circulating pump. The HRSG shall be fully drainable. Large diameter tubes shall be used to minimize the effect of scaling; all tubes in the economizer shall be welded to headers.

- All the necessary ductwork will be provided to make the transitions between the heat recovery components. All ductwork shall include double cased construction that includes insulation.

- The exhaust stack shall be self-supporting, all welded construction with allowance for corrosion. The stack shall include service platforms, access ladders, sampling points and service listing. The stack should be insulated to prevent the gases cooling below the due point within the stack.

5.3 Steam Turbine Generator

5.3.1 General

The project will include a complete combination extraction and condensing steam turbine directly coupled to a 50 Hz, 17.1 MWe generator.

The turbine generator should be designed to operate with 30 bar, 450 °C steam; the controlled extraction steam will discharge to district water heating exchangers operating at various load conditions, and the condensing to a surface condenser.

The turbine generator will take throttle steam at 30 bar, 450°C; the steam turbine should be designed to meet variable summer and winter demands by condensing excess steam; the maximum steam rate, corresponding to CTG and boilers in operation will be 87.8 Mt/h for winter and 67.8 Mt/h during the summer.

5.3.2 Description

The complete steam turbine generator package will include throttle valve, speed regulator, controlled extraction and uncontrolled exhaust to the surface condenser, generator, lube and seal oil systems.

5.3.3 System Operation

There are two modes of operation, summer and winter. During the summer mode the steam turbine will condense any excess steam not utilized for district heating or combustion turbine steam injection; during the winter the condenser will be utilized as needed to condense any excess steam not used for district heating and cogeneration steam.

5.4 Existing Equipment Rehabilitation

Some of the existing equipment needs urgent rehabilitation to continue operating. The following are recommendations based on visual observations; a more detailed inspection should be performed to verify the condition of the equipment; final recommendations for repair should be made based on this detailed inspection; and the possible use of the existing equipment in conjunction with the new equipment to be installed for the new combined cycle facility should be considered.

5.4.1 Mechanical

Steam Generators

- The existing 50 Mt/h steam generator should be modified for dual firing (oil/gas).
- Sootblowers should be installed and/or provided on the existing steam generators.
- Boiler tubes should be replaced where required. When the decision is made to use the existing steam generators, they should be acid cleaned prior to placing same back in service.
- Relocate the fuel oil pumps from present locations, due to fire hazards and/or explosion; new pumps may be required.

Miscellaneous Pumps

- Upgrading of the existing boiler feed and condensate pump is required.

Condensate Return System

- The replacement or repair of the steam and condensate piping to the district water heating system should be done, to prevent unnecessary losses.

- Steam traps must be installed on the condensate return piping of the district water heating system.

District Water Heat Exchangers

- Replace the existing district water heat exchangers. The new heat exchangers should be designed for the maximum capacity of the upgraded system.

Water Treatment System

- Provide a flow orifice on the demineralizer discharge, to enable determination of the demineralizer capacity.

- Obtain a sufficient storage supply of sulfuric acid to prevent any shortcomings when required for anion resin regeneration.

Cooling Towers

- Repair or replace defective underground cooling water piping.

- Rebuild cooling tower.

5.4.2 Electrical

- Replace the existing 4 MVA and 10/5 kVA transformers, due to their unreliability.

- Replace existing motor control centers.

- Replace existing cables, and upgrade control room to state-of-the-art conditions.

- Repair or replace defective cooling tower fans.

5.4.3 Instrumentation and Controls

- Provide instrumentation/controls on the boiler feed and condensate pumps.
- Provide state-of-the-art boiler controls.
- Upgrade 6 MW steam turbines with state-of-the-art controls.
- Repair or replace the steam pressure control valves on the steam supply line to the district heating system.

5.4.4 Civil Works

- Repair cooling tower structure.
- Repair existing buildings, such as the boiler room, control room, etc.

V. ENVIRONMENTAL IMPACT ASSESSMENT

1.0 General

The European Council Directive L 336/1 of November 24, 1988 limits the emissions of certain pollutants into the air from large combustion plants; this directive includes the limitations given on directive L 229/30 of July 15, 1980 on air quality values and guide values for sulphur dioxide and suspended particles and the Council Directive L 87/1 on air quality standards for nitrogen dioxide of March 3, 1985.

These directives shall apply to combustion plants, the rated thermal input of which is equal to or greater than 50 MW thermal, irrespective of the type of fuel used (solid, liquid or gaseous). In all cases, the addition of new boilers or the installation of a combined cycle power plant is environmentally acceptable, meeting the European Community and the Romanian standards (if and when such standards exist).

Please note that for the purpose of this study, the assumption is being made that the European Council Directives for limitation of emissions of certain pollutants into the air applies also in Romania. In all cases described, environmental requirements of the European Community and the Romanian government will be met.

2.0 Air Quality

Impacts to ambient air quality during the construction phase are anticipated to be moderate. Temporary increases in dust loading can be expected, but no irreversible impacts to ambient air quality are expected to occur. During operation, it is anticipated that the installation of the new gas turbine unit and retirement of the existing steam boilers will result in a noticeable improvement in ambient air quality, especially with respect to nitrogen oxides. The new unit has projected emissions that are well within the established guidelines.

3.0 Water/Wastewater Discharge Quality

No adverse water and/or wastewater impacts are expected for the proposed project. Because the gas turbine combined cycle unit is essentially a replacement in kind, additional water consumption should be minor. The proposed project will not cause any additional impact to the existing cooling towers since any extra steam which becomes available in the summer will be injected into the gas turbine, thereby increasing the gas turbine electrical output.

4.0 Noise and Other Social Impacts

No additional noise impacts are predicted at the GRIRO thermal power plant. No adverse noise impacts are anticipated as a result of operation of the proposed gas turbine combined cycle installation.

VI. PROJECT COST AND SCHEDULE

1.0 Scope Definition

Two cost estimates for each option were prepared for the same scope of work. The basis of the first estimate was to maximize the Romanian (local) supply for major mechanical and electrical equipments. The second estimate used competitive international bidding to determine the costs for major mechanical and electrical equipments.

The scope of the cost estimate is defined by the general arrangement drawings, major equipment list and process diagrams which are included in the technical description part of this study.

2.0 Estimate Basis

2.1 Quantities

Quantities were available for major and electrical equipment. Allowances

were provided for civil, mechanical, and electrical works based on the sharing of existing facilities by the new equipment and the experience gained from a similar power plant design in a Central European country.

2.2 Equipment and Material Prices

Budgetary quotes from manufacturers were obtained for gas turbine generators, steam turbine generators, heat recovery steam generators, major pumps, and heat exchangers. The quotes were obtained from manufacturers in the United States or Western Europe and Romania. The industries in Romania have the capability of supplying this equipment with the exception of the gas turbine generators. Some materials for the balance of plant will have to be imported by the Romanian manufacturers.

2.3 Installation Labor

Manhour productivity rates and manual labor rates are based on bid proposals by Central Europe contractors for recent power plant construction. The manual composite labor rate used is US$5/hour and includes salary, fringe benefits, non-manual supervision, construction support items such as equipment and temporary facilities and services required by construction forces and contractor profit. See Table VI-1 (page 37) for determination of the manual labor rate of $5/hour.

2.4 Other Cost Items

- Freight, Marine Insurance and Local Transportation costs for major plant equipment are included at 12% FOB factory costs for international supply. Freight and Local Transportation costs for major plant equipment are included at 9% FOB factory costs for Romanian supply.

- Costs for spare parts are included at 3% of plant equipment costs.

- Project A/E services are included of 6% of construction cost and this percentage is based on estimates in recent feasibility studies for similar power plants.

- Insurance costs for builders risk, third party liabilities are included at 2% of construction costs.

- Contingency costs are estimated at 10% of major mechanical and electrical equipment and 20% of remainder of project construction costs.

2.5 Future Escalation

Future escalation has not been considered in this study. The Benefit/Cost Analyses in Section VII use present day investment costs and present values for comparing the design options.

2.6 Custom Duty

The level of Romanian custom duties for imported plant equipment at the outset of the study effort was 15 percent. This figure was utilized for all economic analyses and calculations in this prefeasibility report. However, this level is subject to change on short notice by appropriate taxing authorities, and under certain circumstances can even be waived as provided under Romanian Foreign Investment Law No. 35/3. For instance, in amendments adopted in June of 1993, imported machinery, equipment, and installations are exempt from import customs duties provided that such imported items do not exceed the equity contribution of the foreign investor.

2.7 Owner Costs

An allowance has been provided for Owner costs such as:

- Project development and feasibility study cost
- Owner supervision and start-up costs
- Operating costs that can be capitalized

2.8 Foreign/Local Currency Split

Two scenarios have been used for major plant equipment cost estimates: one is maximizing the use of Romanian suppliers and the other is the use of international or foreign suppliers. Insurance costs for Builders Risk and Third Party Liabilities and 50% of the Project A/E services are assumed to be in foreign currency. The remainder of costs, such as field erection, specialty subcontractors, plant materials and 50% of the Project A/E services are assumed to be in local currency. In the following Section 3.0, the Summary of Project Costs shows the amounts required in US $ and Lei for each option.

2.9 Exclusions

The project cost estimates do not include items such as:

- Renovations to existing plant other than equipment requiring replacement
- Interest during construction
- Future or forward escalation
- Financing costs such as commitment fee, arrangement for exposure fee, and equity placement, and other financial advisory fees
- VAT
- Working capital

TABLE VI-1
GRIRO PROJECT, ROMANIA
Manual Composite Labor Rate Development

In the U.S.A., the average construction distributable cost for power plants is 75% of construction labor. Therefore, the composite labor rate breakdown for construction labor is as follows:

Wages (Including Fringes)	$24.00/h
Distributable Cost (75%)	18.00/h
Total	$42.00/h

The distributable cost breakdown of 18.00/h is as follows:

- Non Manual - Construction Supervision, Engineering and Administration, 1/3 or $6.00/h
- Other Distributables - Temporary Construction Facilities, Miscellaneous Construction Services, Construction Equipment and Tools, 2/3 or $12.00/h (50% Labor, 50% Material)

USA		ROMANIA	
	$/h		$/h
Wages including Fringes	24.00	Wages incl. Fringes	1.00
Non-Manual 25%x24.00 =	6.00	Non Manual	1.00
		Other Distri.	
Other Distr.			
Temp. Construction Facilities		Temp. Constr. Facil.	
Misc. Construction Services		Misc. Constr. Serv.	
Construction Equipment & Tools		Const. Equip. & Tools	
Material	6.00	Material	2.00
Labor	6.00	Labor	0.50
Total (Composite Labor Rate)	42.00	Total (Composite Labor Rate)	4.50
		Add 10% Profit	0.50
			5.00 or
			3900 Lei/h

Note: 780 Lei = 1 US$

3.0 Summary of Project Costs (Includes Interest During Construction)

The project costs in present day 1993 dollars for the options are as follows:

(In Millions)

Maximizing Romanian (Local) Supply				
	Foreign currency	Local Currency		
Options	US $	Equiv. US $	Lei	Total US $
IA	.26	1.85	1,443	2.11
IB	.27	2.08	1,622	2.35
II	.73	4.81	3,752	5.54
IIIA	29.37	8.43	6,575	37.80
IIIB	33.16	9.20	7,176	42.36
International Supply				
	Foreign currency	Local Currency		
Options	US $	Equiv. US $	Lei	Total US $
IA	3.35	1.29	1,006	4.64
IB	3.36	1.32	1,030	4.68
II	10.52	2.16	1,685	12.68
IIIA	36.67	5.23	4,079	41.90
IIIB	40.46	6.00	4,680	46.46

For the details of the cost estimates, please refer to Table VI-2 (page 93).

4.0 Project Milestone Schedule

4.1 Introduction

The Preliminary Project Milestone Schedule has been prepared for the design and construction of the GRIRO S.A. power plant. The schedule, which is based on plant size and configuration as described in other sections of this report, considers the location and general physical conditions of the building, construction access, manufacturing, and delivery time for the major equipment, the requirements of international competitive bidding and other factors.

The schedule is based on a replicated contracting plan and includes separate contracts for:

- Project A/E Services
  - Conceptual Engineering
  - Technical Specifications
  - Procurement Services
  - Construction Management Services
- Gas Turbines
  - Supply and Erection
- Heat Recovery Steam Generators (HRSG)
  - Supply and Erection
- Steam Turbine Generator and Condenser
  - Supply and Erection
- Civil Works
  - Detail Design
  - Material Supply and Erection
- Mechanical and Electrical Works
  - Detail Design
  - Material Supply and Erection
- Switchyard
  - Detail Design
  - Material Supply and Erection
- Demolition
- Insurance
  - Project Wrap-up Insurance

The sequence, duration and relationship among the activities displayed on the schedules is based on the need to purchase long lead time equipment, a design and process which depends on the systematic and logical flow of design information; and a procurement process which will be extended because of the requirements of the review and approval

process imposed by the international lending agencies.

The engineering and procurement process requires a significant coordination effort, as much of the detailed design information will be supplied by equipment manufacturers who will be located throughout the industrial world. Specifications and other design criteria provided by the Project Architect Engineer (A/E) will be prepared in such a manner so as to maximize the number of equipment and material manufacturers who could submit proposals, yet maintain the desired operating parameters of the facilities.

For the purpose of clarity, the interrelationships among the design disciplines during the design process has been simplified in the schedules provided. The design of the plant will heavily depend on the specific combustion turbines, steam turbines, and heat recovery steam generators selected. The logic followed in schedule development is described below.

The combustion turbine specification and specific operating parameters, provided by the selected gas turbine manufacturer, will be used in part as the design criteria by the heat recovery steam generator (HRSG) manufacturer. The HRSG manufacturer will in turn provide design and operating information to steam turbine manufacturers, to be used for both proposal preparation and final design.

In order to accelerate the design and procurement process, the selection of the combustion turbine, HRSG, and steam turbine suppliers occurs somewhat in parallel rather than in series. This is possible because the specifications prepared by the project A/E are tailored to provide enough information for the various equipment manufacturers to prepare the major portion of their proposals, which can then be modified, as necessary, as contracts for major equipment are awarded and specific design and operating parameters are available.

Upon the selection of the major mechanical components, the specifications and conceptual design can be completed for the other engineering disciplines, and bid packages issued to contractors interested and qualified to provide civil mechanical/electrical, and other necessary equipment, materials, and services.

As these contracts are awarded, there is a continued and active coordination effort required by the project A/E to ensure the various project contractors are providing the necessary design information in support of the integrated design effort, as scheduled and in specified detail. The project A/E responsibilities will include the review and approval of detail designs and specifications.

As the project moves from the design to the manufacturing and supply stage, the project A/E will monitor the manufacturing process to ensure quality controls are followed and equipment is delivered as scheduled.

During the construction stage, the project A/E will provide construction management services in support of the client assuring that the construction effort meets all contractual obligations and the plant operates and performs as designed.

4.2 Plant Schedules

The Milestone Schedule developed for GRIRO S.A. power plant shows the sequence of activities and overall duration of 36 months. The current critical path evaluated is shown through the purchase order and delivery of steam turbines. As the combustion turbine market is quite volatile, the actual delivery time may be equal or longer in duration than that for the steam turbine. Though the actual implementation schedule cannot be prepared until later in the project development process, based on experience working with international financing institutions, equipment suppliers, and contractors, the schedule duration displayed should be attainable under normal conditions.

The actual duration for project implementation will in a great part be controlled by the lead times for major pieces of equipment which will be dictated by the supply and demand situation at the time of purchase.

With the above in mind, plus the thought of producing more electricity for resale to the national grid, Case A is the more attractive option.

In addition, more thermal heat is produced, thereby providing a means to accommodate possible increases in thermal heat demand and making the GRIRO thermal power plant project the first privatized power producing company in Romania.

ACTIVITY DESCRIPTION
COMBUSTION TURBINE
PRELIMINARY ENGINEERING
COMBUSTION TURBINE SPEC.
COMBUSTION TURBINE (RFP)
COMBUSTION TURBINE PROPOSAL PREPARATION
COMBUSTION TURBINE EVAL/AWARD
HRSG
HRSG SPEC
HRSG (RFP)
HRSG PROPOSAL PREPARATION
HRSG EVAL/AWARD
STEAM TURBINE
STEAM TURBINE SPEC
STEAM TURBINE (RFP)
STEAM TURBINE PROPOSAL PREP.
STEAM TURBINE EVAL/AWARD
MECHANICAL/ELECTRICAL
MECHANICAL SPECS
ELECTRICAL SPECS
EQUIPMENT LAYOUT
FLOW DIAGRAMS
I & C SPECS
PIPING LAYOUT
P & I D
ELECTRICAL SINGLELINES
MECH/ELEC (RFP)
MECHANICAL/ELECTRICAL PROPOSAL PREPARATION
MECHANICAL/ELECTRICAL EVAL/AWARD
CIVIL
CIVIL SPECS
CIVIL (RFP)
CIVIL WORKS PROPOSAL PREPARATION
CIVIL EVAL/AWARD
SWITCHYARD
SWITCHYARD LAYOUT
SWITCHYARD SPEC.
SWITCHYARD (RFP)
SWITCHYARD PROPOSAL PREP.
SWITCHYARD CONTRACT EVAL/APPROVE

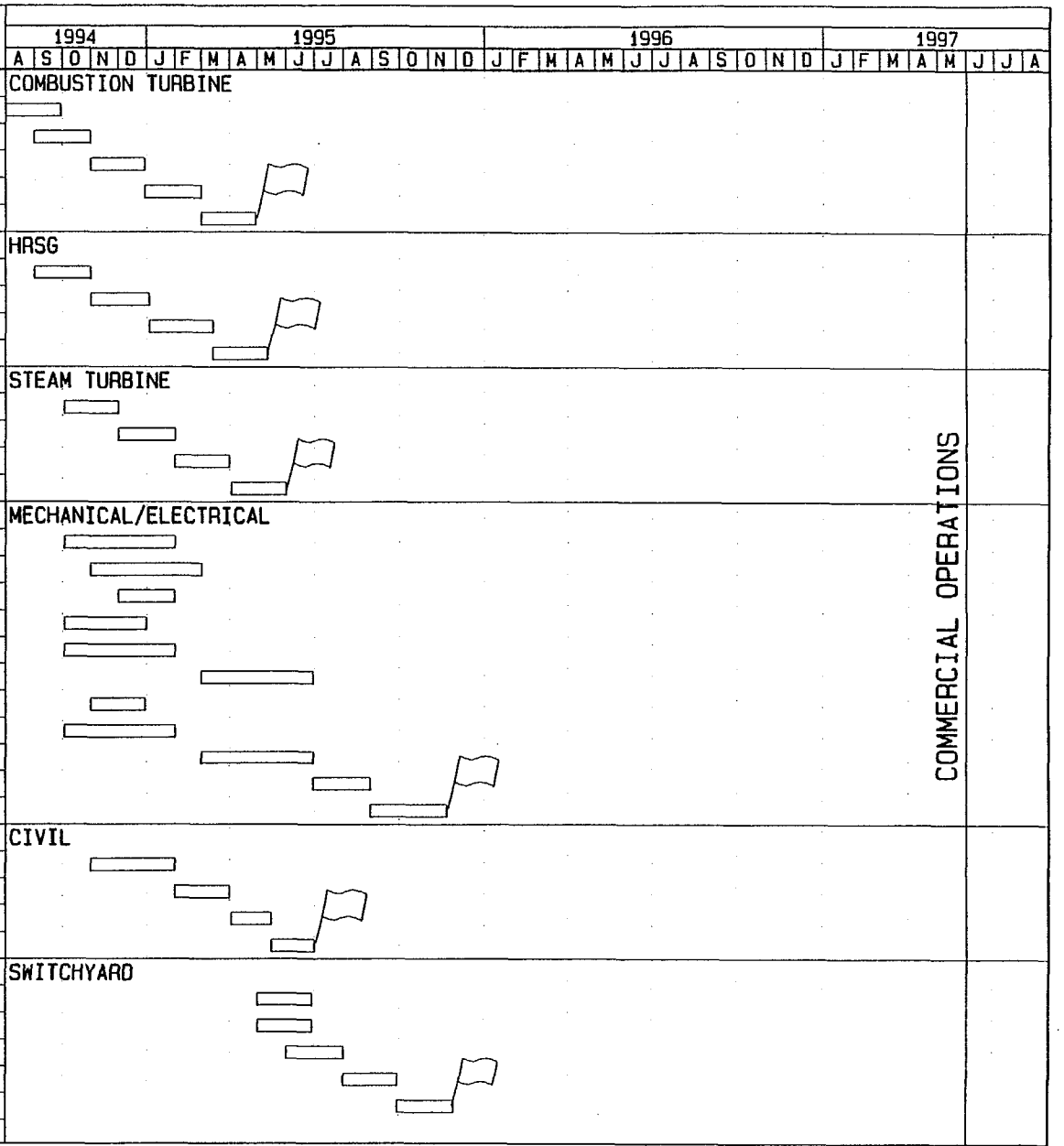

Plot Date 9SEP93
Data Date 1AUG94
Project Start 1AUG92
Project Finish 30MAY97

Activity Bar
Critical Activity
Milestone/Flag Act

(c) Primavera Systems, Inc.

GAIR

Sheet 1 of 3

GAIRO S.A. COMBINED CYCLE / COGENERATION POWER STATION MILESTONE SUMMARY SCHEDULE

K&M ENGINEERING AND CONSULTING CORPORATION

Date	Revision	Checked	Approved

F:\APPS\P3DATA\1060\GAIRGC1A

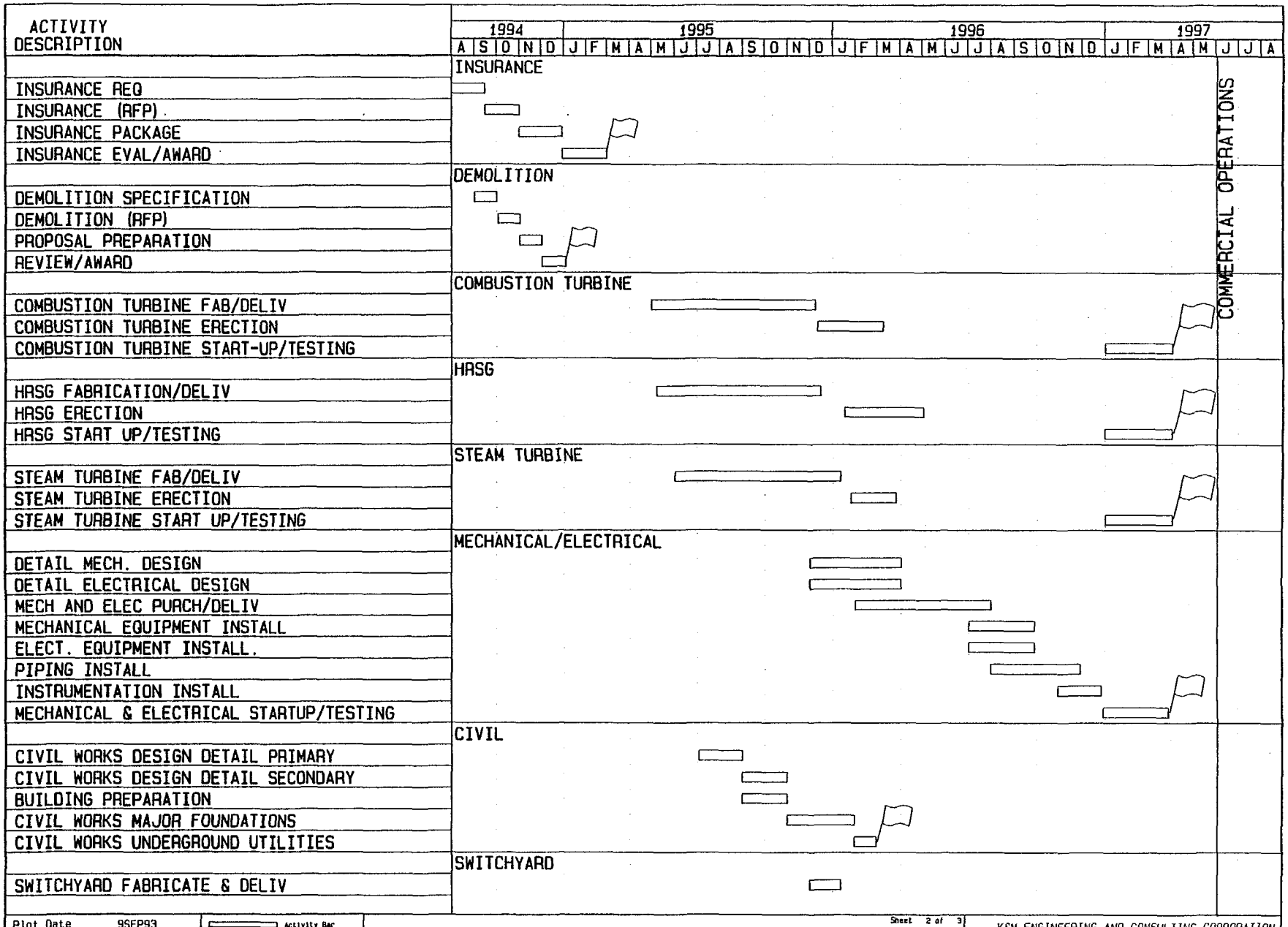
ACTIVITY DESCRIPTION
1994
1995
1996
1997
A S O N D J F M A M J J A S O N D J F M A M J J A S O N D J F M A M J J A
INSURANCE
INSURANCE REQ
INSURANCE (RFP)
INSURANCE PACKAGE
INSURANCE EVAL/AWARD
DEMOLITION
DEMOLITION SPECIFICATION
DEMOLITION (RFP)
PROPOSAL PREPARATION
REVIEW/AWARD
COMBUSTION TURBINE
COMBUSTION TURBINE FAB/DELIV
COMBUSTION TURBINE ERECTION
COMBUSTION TURBINE START-UP/TESTING
HRSG
HRSG FABRICATION/DELIV
HRSG ERECTION
HRSG START UP/TESTING
STEAM TURBINE
STEAM TURBINE FAB/DELIV
STEAM TURBINE ERECTION
STEAM TURBINE START UP/TESTING
MECHANICAL/ELECTRICAL
DETAIL MECH. DESIGN
DETAIL ELECTRICAL DESIGN
MECH AND ELEC PURCH/DELIV
MECHANICAL EQUIPMENT INSTALL
ELECT. EQUIPMENT INSTALL.
PIPING INSTALL
INSTRUMENTATION INSTALL
MECHANICAL & ELECTRICAL STARTUP/TESTING
CIVIL
CIVIL WORKS DESIGN DETAIL PRIMARY
CIVIL WORKS DESIGN DETAIL SECONDARY
BUILDING PREPARATION
CIVIL WORKS MAJOR FOUNDATIONS
CIVIL WORKS UNDERGROUND UTILITIES
SWITCHYARD
SWITCHYARD FABRICATE & DELIV
COMMERCIAL OPERATIONS
Plot Date 9SEP93
Data Date 1AUG94
Project Start 1AUG92
Project Finish 30MAY97
(c) Primavera Systems, Inc.
Activity Bar
Critical Activity
Milestone/Flag Act
Sheet 2 of 3
GRIRO S.A. COMBINED CYCLE / COGENERATION POWER STATION MILESTONE SUMMARY SCHEDULE
GRIR
K&M ENGINEERING AND CONSULTING CORPORATION
Date
Revision
Checked
Approved
F:\APPS\P3DATA\1060\GRIR8C1A

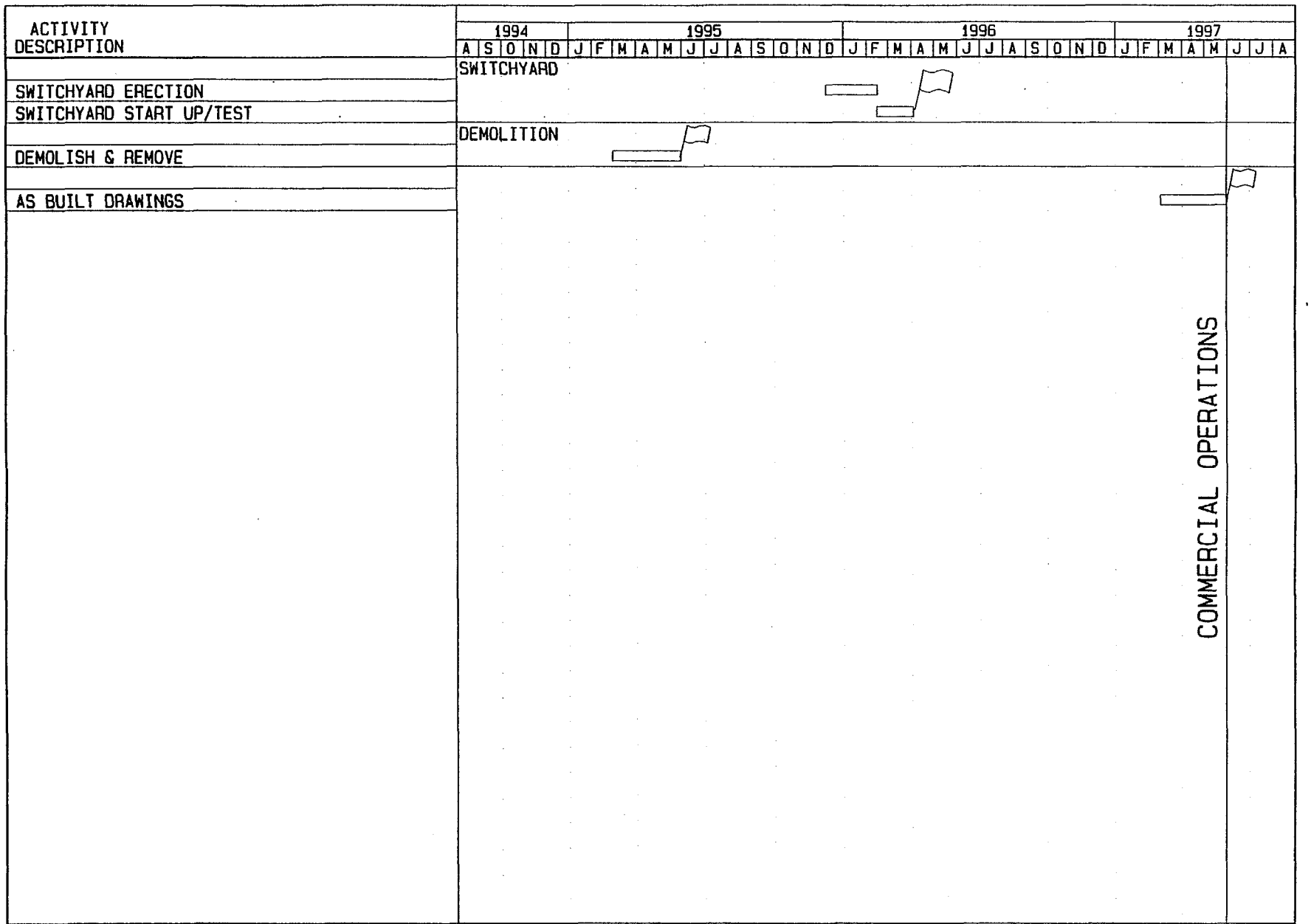

Plot Date 9SEP93
Data Date 1AUG94
Project Start 1AUG92
Project Finish 30MAY97

(c) Primavera Systems, Inc.

Activity Bar
Critical Activity
Milestone/Flag Act

Sheet 3 of 3

GRIRO S.A. COMBINED CYCLE / COGENERATION POWER STATION
MILESTONE SUMMARY SCHEDULE

K&N ENGINEERING AND CONSULTING CORPORATION

Date	Revision	Checked	Approved

F:\APPS\P30ATA\1060\GR1RBC1A

VII. ECONOMIC ANALYSIS

1.0 Benefit-Cost Analysis of Options

Benefit-cost analyses were performed for the five Options IA, IB, II, IIIA and IIIB. A discount rate of 9% and an economic life of 20 years was used in these analyses. Project schedules of two years were used for Options IA, IB and II, and three years for Options IIIA and IIIB.

Present values of the additional benefits and plant costs were determined for comparison between the options.

The benefits are the additional sales of electricity and heat experienced when the new power station is put into operation in 1996 or 1997.

The costs are additional, also, and include:

- Investment costs, made up of existing plant upgrades and construction of new facilities.
- Fuel consumption
- Maintenance costs estimated at 1.5% of investment costs.
- Factory overhead costs also estimated at 1.5% of investment costs.

These analyses simulated the operation of the new plants which meet the heat supply and electricity demands furnished by Griro S.A. Furthermore, the additional benefits and costs were determined for each option from a base which is the power plant, today, and the 1992 production rates of

Electric power	-	23.6 GWh
Heat	-	296,600 G cal
Fuel consumption	-	
Fuel oil	-	398 Mt
Natural gas	-	48.8 million m^3

The Benefit/ Cost Analyses are based on the rates for electricity, heat and fuel as follows[1]:

[1] Fax from Serban Stree, GRIRO, to K&M Engineering and Consulting Corporation, 23 July 1993, "Cost Components Gcal (in lei)".

Electricity $.035/kWh (28 Lei/kWh)
Heat Supply $9.68/Gcal (7248 Lei/Gcal)
Fuel:

- Light Oil $.128/l (100 Lei/liter or 48.64 U.S. cents per gallon which is average World Price)
- Heavy Oil 71,800 Lei/Mt (Based on World Price of $92/mt)
- Natural Gas 11.7 Lei/m^3 (Based on World Price of $15/1000m3)

The summary of the Benefit/ Cost Analyses are as follows:

TABLE VII-1

Options	IA	IB	II	IIIA	IIIB
Investment Costs Based on Romanian Supply of Equipment and Materials					
Benefits (Mil Lei)	21,735	21,735	37,075	95,562	79,448
(Mil Dollars)	27.404	27.404	47.532	122.515	108.856
Electric and Heat Sales Present Value (PV)					
Costs (Mil Lei)	7,774	7,943	23,924	64,811	63,777
(Mil Dollars)	9.967	10.183	30.672	83.091	81.765
Investment, Fuel, Maintenance, Factory Overhead					
PV Benefits/PV Costs	2.796	2.736	1.550	1.474	1.246
Investment Costs Based on International Supply of Equipment and Materials					
Benefits (Mil Lei)	21,735	21,735	37,075	95,562	79,448
(Mil Dollars)	27.865	27.865	47.532	122.515	101.856
Electric and Heat Sales Present Value (PV)					
Costs (Mil Lei)	9,203	9,259	27,958	66,995	65,961
(Mil Dollars)	11.799	11.871	35.844	85.891	84.565
Investment, Fuel, Maintenance, Factory Overhead					
PV Benefits/PV Costs	2.362	2.347	1.326	1.426	1.204

The following observations can be made:

- Romanian Supply is more economical than International Supply because the equipment costs are lower. For all of the options the Benefit/ Cost Ratios are higher for Romanian supply.

- All of the options have more benefits than costs. Option IA Romanian Supply is the most beneficial on this basis, however this option generates little electricity.

- Option IIIA generates the most electricity, the benefit/costs ratio is very favorable (1.474) and the demand for additional electricity in the region of this plant exists.

- For Option IIIA the difference in performance and quality of equipment between International Supply and Romanian Supply may be sufficient to offset the lower costs experienced when construction relies on maximizing utilization of in-country supplies (64,811 mil Lei vs. 66,995 mil Lei, or a $2.8 million difference).

2.0 Economic Evaluation and Recommendation

Internal Rate of Return (IRR) was determined for each option, maximizing Romanian Supply in the first instance and competitive international supply in the second instance. For the calculation of IRR, refer to Section VI for the description of the components of the investment costs.

The prices used in this economic evaluation of the options are:

	Unit	US $	Lei
Electricity	kWh	.0359	28
Heat Supply	Gcal	9.29	7248
Fuel			
Heavy Oil	mt	92	71,800
Natural Gas	1000 m^3	15	11,700
Light Oil	liter	.128	100

Other assumptions that have been made in performing this economic evaluation are:

- The plant life for the rehabilitated or new facilities is 20 years.

- The discount rate is 9%.

- The exchange rate is $US = 780 Lei.

- The production is additional resulting from the investment.

- Investments are in constant 1993 prices and include physical contingencies.

- The fuel estimate is for additional fuel consumption after GRIRO rehabilitation.

Summarized in Table VII-6 below are the IRR's and Present Values Cumulative Net Benefits for each of the options.

Table VII-6

Options	IA	IB	II	IIIA	IIIB
Basis - Romanian Supply of Major Equipment and Materials					
Present Values Cumulative Net Benefits $ Millions	12.89	12.62	12.03	29.75	11.83
IRR	1.120	.954	.530	.252	.171
Basis - International Supply of Major Equipment and Materials					
Present Values Cumulative Net Benefits $ Millions	11.23	11.19	7.35	26.64	8.95
IRR	.570	.565	.243	.229	.156

Tables VII-7 (Pages 120 through 129) supply the details that determine the numbers above.

It is recommended that Option IIIA Romanian Supply be selected because the present value of the cumulative net benefits is $29.75 million (the highest value of all of the options) and the IRR of 25.2% is reasonable. However, if the performance and quality of Romanian-supplied equipment is doubtful (steam turbine generator and heat exchangers) then Option IIIA International Supply should be selected because the cumulative net benefits is $26.64 million ($3.11 million less than Romanian supply) and the IRR of 22.9% is still reasonable. This option produces 516 GWh annually and a substantial portion can be sold to the RENEL grid (466 GWh).

Table VII-2 (Pages 105-115) shows the present values of additional benefits and costs for all of the options and the benefit/cost ratios. Also attached to support these benefit/cost analyses are:

- Calculated annual power and heat production and fuel consumption (Table VII-3, Page 116).
- Parameters used (Table VII-4, Page 117).
- Calculated additional benefits and costs (Table VII-5, Page 119).

VIII. ALTERNATIVE FINANCING OPTIONS

1.0 Overview of Relevant Project Development Alternatives

In today's uncertain and generally difficult investment climate in Eastern Europe, the great paradox is that oftentimes the larger the project, the easier it is to arrange financing. In the case of the GRIRO S.A. project, total project costs (as opposed to total financial requirements) for the various rehabilitation options evaluated in this preliminary feasibility study range from US$2.11 million for Option IA to US $42.36 million for Option IIIB under a scenario that attempts to maximize local Romanian supply. While Option IA possesses the highest benefit/cost ratio as well as internal rate of return for all options evaluated, it is next to impossible to arrange external financing from an international financial institution for such a project because it is simply too small to consider. For instance, the development banking group of the European Bank for Reconstruction and Development (EBRD) is really only looking for larger projects in the US$30-40 million range. Accordingly, if GRIRO decides to select either Option IA, IB, or II, it will in all probability have to arrange its own project financing through a commercial bank already familiar with doing business in Romania. The only other viable alternative is covering the foreign exchange requirements through cumbersome countertrade or barter arrangements.

On the other hand, assuming that GRIRO agrees with K&M's recommendation that Option IIIA presents the greatest opportunity for generating additional profits through the increased sale of both electricity and thermal energy while at the same time providing fully for its own energy requirements, a number of interesting financing options are possible. However, for the purposes of this preliminary analysis, K&M has only selected two project financing structures for developing a major cogeneration pilot project at the GRIRO S.A. steel fabrication facility in northwest Bucharest. Each of these approaches is briefly summarized below.

1.1 The Government-Sponsored Project Approach

In the event that privatization and free market reforms remain on a slow track in Romania, then based upon the prevailing notion that GRIRO has a social obligation and corporate commitment to provide thermal energy to at least 10,000 residential apartments in district heating zone 1 and possible additional units in zone 6, a case can be made that the Government of Romania should be prepared to provide a sovereign guarantee on all debt associated

with implementation of such a worthy social investment. Government sponsorship for this project could be justified on the following grounds: (1) it will make available to the grid approximately 60 MWe of additional installed capacity at a location where RENEL presently has difficulty providing reliable electricity; and (2) it will generate about 77 GCal/hr of thermal energy for residential users in RADAT's district heating zones 1 and 6.

Under such a scenario, GRIRO would serve as the owner and operator of the facility, possibly in partnership with RENEL and RADAT. However, the only major sources of debt financing available today for such a government-sponsored project are from either the World Bank or the European Bank for Reconstruction and Development in London. Long-term sovereign risk debt with twelve year payback period from most major export credit lending agencies is no longer available to Romania. For instance, the only window that is open for Romania today at the Export-Import Bank of the United States is the short-term insurance program. Even the short-term sovereign risk lending window requiring repayment within 360 days is presently closed for export credit financing of equipment sales to Romania.

1.2 The Privatized Build-Own-Operate Approach

In the event that the Government is either unwilling or unable to provide a sovereign guarantee for the repayment of all debt associated with the project, it may be possible to arrange project financing on a limited recourse basis if the project is to be developed as a private cogeneration project under the auspices of one or more sponsors who will actually build, own, and operate this new cogeneration facility. While the plant will be located at the GRIRO site in northwest Bucharest, it would have a fence around it, so to speak, to ensure that it is a separate corporate entity from GRIRO S.A. However, it would still be desirable to have GRIRO as one of the project sponsors and equity owners of the facility, along with RENEL and possibly RADAT.

An important ingredient to financing Option IIIA as a private cogeneration facility would be RENEL's intent to purchase electricity from the project under a long-term power purchase arrangement at a tariff rate to be negotiated between the sponsors and RENEL prior to financial close for the project. This tariff will be comprised of three components:

(a) A capacity charge sufficient to cover all fixed costs associated with the project plus a fair return to the investors;

(b) An energy charge for all variable costs associated with operation of the plant; and

(c) A fuel charge.

The details of such a tariff, as well as the tariff adjustment mechanism and any bonus or penalties that may be assessed for performance at or below certain levels, will be set forth in a Power Purchase Agreement to be negotiated between the project company and RENEL.

Similarly, a Thermal Energy Purchase Agreement will be negotiated between the project company and RADAT prior to financial close.

In developing Option IIIA as a private cogeneration project on a build-own-operate (BOO) basis, several agreements will be required between the proponents and various government or parastatal entities in Romania as part of the overall Security Package structure designed to address and mitigate project risks. The most frequently required agreements include:

- **Implementation Agreement** -- an agreement between the Government of Romania and the project company establishing the terms and conditions, responsibilities, and privileges of the parties. In addition, this agreement sets forth the fundamental risk sharing framework including guarantees of payment for revenues to be generated under the Power Purchase Agreement.

- **Power Purchase Agreement** -- an agreement that specifies the base tariff rate, method of payment, adjustments to payment, and the conditions under which the power plant should operate.

- **Thermal Energy Purchase Agreement** -- an agreement that specifies the base tariff rate, method of payment, adjustments to payment, and the conditions of providing heat to residential and other customers.

- **Fuel Supply Agreements** -- agreements between the project company and the natural gas and liquid fuel suppliers.

- **Other Documents in the Security Package** -- these agreements typically include a Construction Contract, Land and/or Lease Agreement, Shareholders Agreement, Legal Charter of the Project

Company, Escrow Agreement, and Financing Agreements among others.

Private sector involvement in general, and innovative financing options in particular such as build-own-operate concepts, can provide several major advantages to Romania and GRIRO. These include, but are not limited to, the following benefits:

- A private cogeneration project can facilitate the introduction of more efficient market forces into the electric power and district heating subsectors.

- It has the potential for adding new generating and district heating capacity without any increase in official Romanian debt.

- Neither RENEL, RADAT, nor GRIRO S.A. will have to bear the risk of potential cost overruns, construction delays, or operation risks associated with bringing the facility on-line.

- It will in all probability give both RENEL and RADAT access to new and upgraded electricity and thermal energy generating capacity at an earlier date than if they tried to build such capacity themselves.

- Similarly, O&M costs and administrative costs will be significantly less than those associated with government-owned and operated projects.

- The Government of Romania only has to guarantee payment by either utility if electricity or thermal energy is received or capable of being received by the purchaser.

- It will be consistent with Romania's desire to encourage greater international investment in its economy.

- It will provide potential domestic investors and local partners with an opportunity to receive profits from a sound industrial undertaking in their own country, as well as provide stimulus to future local financial and stock markets.

- Finally, it will free up much needed investment capital for other sectors of the economy.

2.0 Overall Financing Requirements

Total project financing requirements are estimated in Table VIII-1 (Page 54) for Option IIIA, both as a government-sponsored infrastructure project and a private cogeneration project on a build-own-operate basis.

3.0 Preliminary Financing Schemes

For the purposes of this preliminary feasibility analysis, it has been assumed that the GRIRO cogeneration project (Option IIIA) will be financed on the basis of a 70/30 debt to equity ratio (inclusive of interest and financing costs during construction) throughout the repayment period regardless of overall project development approach. K&M feels that for a captive cogeneration project selling thermal energy and electricity over the fence under long-term purchase agreements, a 70/30 ratio represents an appropriate level of gearing given the potentially constant level of revenues over the project's life, as well as the risk profile of the project--especially on a project finance basis as a build-own-operate (BOO) project.

Illustrative approaches to potential sources of debt and equity for financing Option IIIA are highlighted below for both a government-sponsored and privately-financed project on a build-own-operate basis. However, it should be kept in mind that a detailed evaluation based upon a more complete estimate of project costs will be available upon completion of a detailed feasibility report, as well as the identity of the contracting parties, and that these essential updates will enable a more clearly defined financing plan to be developed.

In any event, K&M feels that the sources of debt and equity referred to in each of the project development cases presented below access or represent an appropriate blend of multilateral, bilateral, and commercial providers in amounts which should encourage them to form a positive view of this project, either as a sovereign credit or BOO project risk.

3.1 Full Sovereign Debt Scenario

The potential sources of debt for financing this project utilizing the full faith and credit of the Government of Romania to guarantee repayment of the loan are set out below. Since major export credit lending agencies are not presently active in Romania given the current economic climate and their assessment of attendant risks, the major portion of the debt will, out of necessity, have to be provided by international financial institutions. To date, K&M has found that the European Bank for Reconstruction and

TABLE VIII-1

COMPARISON OF OVERALL FINANCING REQUIREMENTS BETWEEN A GOVERNMENT-SPONSORED AND PRIVATE COGENERATION APPROACH

(In thousands of 1993 U.S. dollars)

MAJOR PROJECT COST COMPONENTS	GOVERNMENT-SPONSORED INFRASTRUCTURE PROJECT	PRIVATE COGENERATION PROJECT BOO BASIS
A. **Major Capital Costs**		
Equipment, Shipping, & Insurance	22,612	22,612
Civil, Mechanical, & Electrical	3,000	3,000
Project A/E Services	1,537	1,537
Liability Insurance	543	543
Contingency	3,389	3,389
Custom Duty	3,278	3,278
Owner Costs (Feasibility Study, Owner Supervision and Start-up, and Operating Costs that can be Capitalized)	3,441	3,441
Subtotal	37,800	37,800
B. **Additional Project Development Costs**		
Formation of Project Company	--	100
Tariff Negotiations for Electricity & Heat Sales	--	150
Power Purchase and Heat Purchase Agreements	--	350
Security Package Negotiation	--	300
Subtotal	--	900
C. **Financing Costs**		
Project Implementation Memorandum	--	150
Commitment Fees with Lenders	150	150
Arrangement Fee	130	130
Equity Placement and Other Financial Advisory Fees	200	1,500
Exposure Fee for Romania	N/A	N/A
Subtotal	480	1,930
D. **Other Capitalized Costs**		
Interest During Construction	4,763	4,763
Subtotal	4,763	4,763
TOTAL PROJECT FINANCING REQUIREMENTS	**43,043**	**45,393***

Note: * Although project costs appear larger for a private cogeneration project, such an approach better assures completion at the original price since cost overruns will be absorbed by the project company.

Development has expressed the greatest amount of interest in this particular project. On the other hand, it still may be possible to incorporate the project into a future energy sector loan from the World Bank, but this process will probably take longer than dealing with the EBRD, which is actively seeking good projects in the US$30-40 million range at the present time. However, except for the possibility of expanded participation on the part of multilateral institutions, additional loan commitments on the debt side will be extremely difficult to arrange for a government-sponsored project in Romania today.

3.1.1 Potential Sources of Debt

The potential sources of debt that can be anticipated for a government-sponsored project selling electricity to RENEL under long-term contract and meeting social requirements by providing hot water to 10,000 apartments in district heating zone 1 include the following:

TOTAL DEBT OF 70 PERCENT

Major Sources of Debt	Thousands of 1993 U.S. Dollars	Percent of Debt	Percent of Total Costs
European Bank for Reconstruction & Development (Direct Lending Program)	24,104	80	56
Convertible Debentures through Multilateral Institutions	3,013	10	7
Debt/Debt Swaps and Local Banks (to meet additional local currency requirements)	3,013	10	7
	30,130	100	70

Finally, it should be noted that in the event a portion of the convertible debentures must be treated as equity, then it might be necessary to seek additional sources of public sector debt. Possibilities that need to be explored further include, but are not limited to, grants from either bilateral or multilateral assistance programs or a government loan guarantee.

3.1.2 Potential Sources of Equity

The potential sources of equity and in-kind contributions that can be anticipated for the government-sponsored project option include:

TOTAL EQUITY OF 30 PERCENT*

Major Sources of Equity	Millions of 1993 U.S. Dollars**	Percent of Equity	Percent of Total Costs
GRIRO S.A.	5,165	40	12
RENEL	5,165	40	12
RADAT	2,583	20	6
	12,913	100	30

Note: * Thirty (30) percent equity will be required by the international lenders as a result of current risk assessments and the overall state of the Romanian economy today. In addition, this project will require significant amounts of local currency as a result of the high Romanian content that can be anticipated.

** Local currency requirements in equivalent U.S. dollars.

3.2 Limited Recourse Financing Scenario

A second approach to financing this proposed cogeneration facility is through project financing backed by a combination of owner's equity (on the part of the project sponsors) and the value of long-term Power Purchase and Thermal Energy Purchase Agreements with RENEL and RADAT, respectively. In this case, by arranging to put up 30 percent of the total financing requirements for this project, the project sponsors will have the right to build, own, and operate this cogeneration facility for a specified duration (generally 15-20 years). The balance of project financing will be secured on a limited recourse basis and backed by the value of the long-term Power Purchase and Thermal Energy Sales Agreements, as well as possible secondary guarantees from governmental, bilateral, and multilateral organizations.

Previous experience with build-own-operate concepts indicates that the commitment of the host government, coupled with the credibility and track record of the sponsoring group, are the key ingredients of success in a private energy project of this nature. Moreover, the intent is to allocate risks to the various participants in the project according to their ability, suitability, and willingness to bear them. Within such a framework, the intent is to seek to transfer as many of the project risks (especially commercial risks) as possible from the Government of Romania to the project sponsors, contractors, and other private sector participants in an effort to ensure that financing can proceed on a limited recourse basis without direct government guarantees for debt repayment. Typically, the risks associated with such limited recourse projects can be divided into two broad categories of risks: pre-completion and post-completion risks.

With respect to pre-completion risks, the project sponsors agree to enter into a date-certain, cost-certain turnkey contract with appropriate completion guarantees and liquidation damages to support debt service during unanticipated delays. This aspect is crucial since debt service must be paid when due regardless of completion. Additional backstopping can be provided by business interruption insurance and physical force majeure insurance to minimize any residual exposure to GRIRO S.A., RENEL, or RADAT.

After the plant has been constructed and is selling electricity to GRIRO and RENEL as well as thermal energy to GRIRO, RADAT, and interested commercial customers, additional backstopping will be provided by insurance not only for asset loss, but also for business interruption to cover debt service. Moreover, physical force majeure interruption will be covered by insurance to minimize any residual exposure to GRIRO, RENEL, or RADAT. These arrangements will be supported by suitable debt reserve provisions to ensure that an adequate level of comfort is available to sources of finance without the requirement for direct government intervention.

3.2.1 Potential Sources of Debt

The potential sources of debt that can be anticipated for a privatized energy project on a BOO basis selling electricity to GRIRO S.A. and RENEL under a long-term power purchase contract and thermal energy to GRIRO S.A., RADAT, and other interested commercial customers under long-term thermal energy sales agreements include the following:

TOTAL DEBT OF 70 PERCENT

Major Sources of Debt	Thousands of 1993 U.S. Dollars	Percent of Debt	Percent of Total Costs
Multilateral Agencies (such as the European Bank for Reconstruction & Development and possibly the International Finance Corporation)	15,888	50	35
Overseas Private Investment Corporation (Finance Program)	6,355	20	14
Commercial Banks through Co-financing with Multilateral Institutions	6,355	20	14
Debt/Debt Swaps and Local Banks (to meet additional local currency requirements)	3,177	10	7
	31,775	100	70

3.2.2 Potential Sources of Equity

The potential sources of equity and in-kind contributions that can be anticipated for a privatized energy project on a BOO basis include:

TOTAL EQUITY OF 30 PERCENT

Major Sources of Equity	Thousands of 1993 U.S. Dollars	Percent of Equity	Percent of Total Costs
Project Sponsors	2,724	20	6
European Bank for Reconstruction & Development (Merchant Banking)	2,724	20	6
Other Multilateral Equity Participation (possibly by the International Finance Corporation)	2,724	20	6
RENEL	2,724	20	6
RADAT	1,361	10	3
Local Institutional, Corporate, and Individual Investors	1,361	10	3
	13,618	100	30

IX. RECOMMENDED NEXT STEPS

Assuming that GRIRO concurs with the selection of Option IIIA, K&M recommends that the following project-related activities be undertaken.

1.0 Preliminary Actions for GRIRO

It is suggested that GRIRO initiate discussions with both RENEL and RADAT regarding their potential interest in participating in such a project from the standpoint of becoming future customers for the electricity to be generated and hot water and possibly steam to be produced from the proposed cogeneration facility, as well as exploring whether they are interested in becoming one of the project sponsors.

In this regard, K&M feels that at the present time, it may prove extremely difficult to arrange sufficient financing for this project if it proceeds as a government-sponsored infrastructure investment.

Accordingly, K&M recommends that GRIRO, RENEL, and RADAT consider signing a Memorandum of Understanding (MOU) setting forth their intentions to encourage the development of this proposed cogeneration facility on a privatized basis. For its part, GRIRO should be prepared to provide a suitable site located on the grounds of its steel fabrication plant in the northwestern part of Bucharest. Further, GRIRO should be willing to state its intent to promote the establishment of a separate project company on a privatized basis to build, own, generate, and sell electricity to RENEL and thermal energy to RADAT and possibly other commercial customers. However, no commitments should be made in this MOU regarding final management and ownership structure of the project company which will ultimately be formed to develop this privatized project. Similarly, RENEL and RADAT should be prepared to state their intent to purchase specific quantities of electricity and thermal energy from the proposed project.

2.0 Suggested Follow-Up Activities for GRIRO and Ministry of Industry

Moreover, GRIRO and the Romanian Ministry of Industry and Material Resources should be prepared to encourage and support the following additional actions:

- The initiation of a financial risk assessment and institutional framework analysis to be prepared by outside technical consultants in an effort to assess both the current investment climate and potential institutional constraints that may hinder private

investments in power and thermal generation facilities. At a minimum, these reviews should focus on current political structures and trends, overall energy strategy and policies, legal framework for privatization, foreign investment laws including repatriation of profits, foreign ownership of strategic facilities, current bilateral investment treaties, regulatory and licensing framework and current economic outlook. These analyses are deemed necessary since Romania's current investment laws (see Appendix XIII) still do not provide sufficient enough incentives or guarantees to attract foreign private investment in the power sector.

- The commissioning of a fuels availability study with special emphasis on alternatives for improving line pressure in the existing natural gas distribution system, and potential procurement sourcing for distillate fuels suitable for use in combustion turbines.

- The preparation of a detailed feasibility analysis for Option IIIA, including soils analysis, detailed equipment specifications, engineering drawings, and tariff requirements.

- The establishment of a joint-venture project company with interested project sponsors, possibly with the assistance of a U.S. private power developer.

3.0 Proposed Next Steps for USAID

As a direct follow-on to the prefeasibility analysis performed under the current contract, it is proposed that USAID consider undertaking providing technical assistance supporting include the following actions:

- Support the continued development of this promising private energy project opportunity by providing additional technical assistance to GRIRO to conduct a financial risk assessment and institutional framework analysis from a private power investment perspective, as well as perform a fuels availability assessment for this project.

- Provide additional institutional framework/privatization assistance in such areas as private power seminars/workshops, opportunity for GRIRO and RENEL senior management to review firsthand with successful U.S. private power developers the overall framework and strategy for implementing similar private power or cogeneration projects in the United States and elsewhere, and drafting assistance for model Power Purchase and Thermal Energy Sales Agreements.

X. APPENDIX

		Page
Table I	Existing Equipment List	65
Table II	District Heating Temperature	68
Figure I	Typical Week - Winter Energy Production	77
Figure II	Typical Week - Summer Energy Production	78
Figure III	Existing Mechanical Equipment Functional Diagram	79
Figure IV	Electrical System Schematic	80
Figure V	Yearly Thermal and Electrical Energy Production	81
Figure VI	Gas and Oil Yearly Consumption	82
Figure VII	Bucharest Gas Distribution Grid	83
Figure VIII	Heat Balance Diagram, Recommended Option IIIA	84
	• Case IIIA Winter Load (-8°C) Full Firing	85
	• Case IIIA Summer Load (+21°C) Full Firing	87
	• Case IIIA Summer Load (+21°C) Full Firing Steam Injection	89
	• Case IIIA Winter Load (-8°C) Maximum Electrical/Output	91
Table VI-2	Capital Cost Estimate	
	• Option IA - Romanian Supply	93
	• Option IA - International Supply	94
	• Option IB - Romanian Supply	95
	• Option IB - International Supply	96
	• Option II - Romanian Supply	97
	• Option II - International Supply	98
	• Option IIIA - Romanian Supply	99
	• Option IIIA - International Supply	101
	• Option IIIB - Romanian Supply	103
	• Option IIIB - International Supply	104

Page

Table VII-2 Benefit - Cost Analysis

- Option IA - Romanian Supply 106
- Option IA - International Supply 107
- Option IB - Romanian Supply
- Option IB - International Supply 109
- Option IIA - Romanian Supply 110
- Option IIA - International Supply 111
- Option IIIA - Romanian Supply 112
- Option IIIA - International Supply 113
- Option IIIB - Romanian Supply 114
- Option IIIB - International Supply 115

Table VII-3 Annual Power, Heat Production and Fuel Consumption Assumptions 116

Table VII-4 Parameters Used on the Economic Analysis 117

Table VII-5 Additional Benefits and Costs 119

Table VII-7 Rate of Return Estimate

- Option IA - Romanian Supply 120
- Option IA - International Supply 121
- Option IB - Romanian Supply 122
- Option IB - International Supply 123
- Option II - Romanian Supply 124
- Option II - International Supply 125
- Option IIIA - Romanian Supply 126
- Option IIIA - International Supply 127
- Option IIIB - Romanian Supply 128
- Option IIIB - International Supply 129

SKETCHES - Functional Diagram

- Option IA
- Option IB
- Option II
- Option IIIA
- Option IIIB
- General Arrangement Option IIIA

XI. List of United States Manufacturers 130

1.0 Combustion Turbines
2.0 Heat Recovery Steam Generators
3.0 Steam Turbines
4.0 Condensers
5.0 Pumps
6.0 Heat Exchangers

XII. Environmental Impact of Atmospheric Releases of the New Facility

1.0 General 132
2.0 European Community Directives 132
3.0 Atmospheric Releases of the New Facility 135

XIII. Translation of Romanian Foreign Investment Law 137

XIV. Final Comments and Conclusions
1.0 Sequence of Events 141
2.0 GRIRO's Review of Draft Report 141
3.0 Option Selected by GRIRO 141
4.0 Future Actions to Implement GRIRO's Selected Option 141
5.0 Possible Sources of Financing 142

Existing Equipment List

TABLE I			
EXISTING EQUIPMENT LIST[1]			
Equipment Description	**No. of Units**	**Design Data**	**Remarks**
Boilers No. 1 through 6	6	13 MT/H 450°C - 30 bar	4 to be decommissioned 2 under repair Gas and oil burners
Boiler No. 7	1	50 MT/H 450°C - 30 bar	Good condition At this time only gas burners. Will be back fitted to burn also oil
Deaerator	1	Capacity 110 T/hr	Good condition
Turbine No. 1	1	1.6 MWe Extraction and condensing	In poor condition in need of major overhauled
Turbine No. 2	1	6 MWe Back pressure	Good condition
Cooling Towers	1	800 m^3/hr 20 Δt 50 kW fans	Good condition
	2	500 m^3/hr 20 Δt 50 kW fans	One in good condition One under repairs
Circulating Water Pump	1	1,000 m^3/hr 2 bar head	Good condition

F:\1060\outline.JLT

TABLE I			
EXISTING EQUIPMENT LIST[1]			
Equipment Description	**No. of Units**	**Design Data**	**Remarks**
District Heating Water Pumps	1 1 2	1500 m^3/hr 600 m^3/hr 100 m^3/hr	Electric driven Good condition
Boiler Feed Pumps	3	100 m^3/hr 42 bar head	Electric driven Good condition
Condensate Pumps	3	70 m^3/hr 4 bar head	Good condition Electric Driven
Fuel Oil Pumps	2	9.6 T/hr	Poor condition to be replaced
Fire Pumps	2	Electric 200 m^3/hr driven	Good condition
District Heating Heat Exchangers	3	Unknown	To be replaced. Very poor
Water Treatment Plant	1	60 m^3/hr	Good condition
Water Storage Tanks	2 1 1	500 m^3 (underground) 200 m^3 (water tower) 100 m^3 (water tower)	Good condition Good condition Good condition Note: No fire water storage tank exists. During a fire, the fire water pump takes suction from the 500 m^3 underground water storage tank.

[1]Information based on verbal input from GRIRO personnel.

F:\1060\outline.JLT

TABLE I			
EXISTING EQUIPMENT LIST[1]			
Equipment Description	**No. of Units**	**Design Data**	**Remarks**
Fuel Oil Tank (Heavy Oil)	1	1,200 ton	Poor condition
Fuel Oil Tank (Heavy Oil)	1	1,000 ton	Under construction
Fuel Oil Tank (Heavy Oil)	1	700 ton	Under construction
			Note: No light fuel oil storage tank exists.
Turbine Floor Cranes	1	7 ton	Good condition
	1	5 ton	Good condition

[1]Information based on verbal input from GRIRO personnel.

TABLE II DISTRICT HEATING TEMPERATURE				
Ambient Temperature, °C	Supply Temperature, °C	Return Temperature, °C	Delta Temperature, °C	Flow m^3/H
7	70	45	25	248
6.9	70	45	25	251
6.8	71	45	26	253
6.7	71	45	26	256
6.6	71	45	26	258
6.5	72	46	26	261
6.4	72	46	27	263
6.3	73	46	27	265
6.2	73	46	27	268
6.1	73	46	27	270
6.0	74	46	28	273
5.9	74	46	28	275
5.8	74	46	28	278
5.7	75	46	28	280
5.6	75	47	29	283
5.5	75	47	29	285
5.4	76	47	29	288
5.3	76	47	29	290
5.2	77	47	30	293
5.1	77	47	30	295
5.0	77	47	30	298
4.9	78	47	30	300
4.8	78	47	31	303
4.7	78	48	31	305
4.6	79	48	31	308
4.5	79	48	31	310
4.4	79	48	32	313

F:\1060\outline.JLT

TABLE II DISTRICT HEATING TEMPERATURE				
Ambient Temperature, °C	Supply Temperature, °C	Return Temperature, °C	Delta Temperature, °C	Flow m^3/H
4.3	80	48	32	315
4.8	78	48	30	310
4.1	81	48	32	320
4.0	81	48	33	323
3.9	81	?	33	325
3.8	82	49	33	328
3.7	82	49	33	330
3.6	82	49	34	333
3.5	83	49	34	335
3.4	83	49	34	338
3.3	83	49	34	340
3.2	84	49	35	343
3.1	84	49	35	345
3.0	85	50	35	348
2.9	85	50	35	350
2.8	85	50	36	352
2.7	86	50	36	355
2.6	86	50	36	357
2.5	86	50	36	360
2.4	87	50	37	362
2.3	87	50	37	365
2.2	87	50	37	367
2.1	88	51	37	370
2.0	88	51	38	372
1.9	89	51	38	375
1.8	89	51	38	377
1.7	89	51	38	380

F:\1060\outline.JLT

TABLE II DISTRICT HEATING TEMPERATURE				
Ambient Temperature, °C	Supply Temperature, °C	Return Temperature, °C	Delta Temperature, °C	Flow m^3/H
1.6	90	51	39	382
1.5	90	51	39	385
1.4	90	51	39	387
1.3	91	51	39	390
1.2	91	52	40	392
1.1	91	52	40	395
1.0	92	52	40	397
0.9	92	52	40	400
0.8	93	52	41	402
0.7	93	52	41	405
0.6	93	52	41	407
0.4	94	52	42	412
0.3	94	53	42	415
0.2	95	53	42	417
0.1	95	53	42	420
0.0	95	53	43	422
-0.1	96	53	43	425
-0.2	96	53	43	427
-0.3	96	53	43	430
-0.4	97	53	44	432
-0.5	97	53	44	435
-0.6	98	54	44	437
-0.7	98	54	44	439
-0.8	98	54	45	442
-0.9	99	54	45	444
-1.0	99	54	45	447
-1.1	99	54	45	449

TABLE II DISTRICT HEATING TEMPERATURE				
Ambient Temperature, °C	Supply Temperature, °C	Return Temperature, °C	Delta Temperature, °C	Flow m^3/H
-1.2	100	54	46	452
-1.3	100	54	46	454
-1.4	100	54	46	457
-1.5	101	55	46	459
-1.6	101	55	47	462
-1.7	102	55	47	464
-1.8	102	55	47	467
-1.9	102	55	47	469
-2.0	103	55	48	472
-2.1	103	55	48	474
-2.2	103	55	48	477
-2.3	104	56	48	479
-2.4	104	56	49	482
-2.5	104	56	49	484
-2.6	105	56	49	487
-2.7	105	56	49	489
-2.8	106	56	50	492
-2.9	106	56	50	494
-3.0	106	56	50	497
?	?	?	?	?
-3.2	107	57	51	502
-3.3	107	57	51	504
-3.4	100	57	51	507
-3.5	108	57	51	509
-3.6	108	57	52	512
-3.7	109	57	52	514
-3.8	109	57	52	517

F:\1060\outline.JLT

TABLE II DISTRICT HEATING TEMPERATURE				
Ambient Temperature, °C	Supply Temperature, °C	Return Temperature, °C	Delta Temperature, °C	Flow m^3/H
-3.9	110	57	52	519
-4.0	110	57	53	522
-4.1	110	58	53	524
-4.2	111	58	53	526
-4.3	111	58	53	529
-4.4	111	58	54	531
-4.5	112	58	54	534
-4.6	112	58	54	536
-4.7	112	58	54	539
-4.8	113	58	55	541
-4.9	113	58	55	544
-5.0	114	59	55	546
-5.1	114	59	55	549
-5.2	114	59	56	551
-5.3	115	59	56	554
-5.4	115	59	56	556
-5.5	115	59	56	559
-5.6	116	59	57	561
-5.7	116	59	57	564
-5.8	116	59	57	566
-5.9	117	60	57	569
-6.0	117	60	58	571
-6.1	118	60	58	574
-6.2	118	60	58	576
-6.3	118	60	58	579
-6.4	119	60	59	581
-6.5	119	60	59	584

TABLE II DISTRICT HEATING TEMPERATURE				
Ambient Temperature, °C	Supply Temperature, °C	Return Temperature, °C	Delta Temperature, °C	Flow m^3/H
-6.6	119	60	57	586
-6.8	120	61	60	591
-6.9	120	61	60	594
-7.0	121	61	60	596
-7.1	121	61	60	599
-7.2	122	61	61	601
-7.3	122	61	61	604
-7.4	122	61	61	606
-7.5	123	61	61	609
-7.6	123	61	62	611
-7.7	123	62	62	613
-7.8	124	62	62	616
-7.9	124	62	62	618
-8.0	124	62	63	621
-8.1	125	62	63	623
-8.2	125	62	63	626
-8.3	126	62	63	628
-8.4	126	62	64	631
-8.5	126	63	64	633
-8.6	127	63	64	636
-8.7	127	63	64	638
-8.8	127	63	65	641
-8.9	128	63	65	643
-9.0	128	63	65	646
-9.1	128	63	65	648
-9.2	129	63	66	651
-9.3	129	63	66	653

TABLE II DISTRICT HEATING TEMPERATURE				
Ambient Temperature, °C	Supply Temperature, °C	Return Temperature, °C	Delta Temperature, °C	Flow m^3/H
-9.4	130	64	66	656
-9.5	130	64	66	658
-9.6	130	64	67	661
-9.7	131	64	67	663
-9.8	131	64	67	666
-9.9	131	64	67	668
-10.0	132	64	68	671
-10.1	132	64	68	673
-10.2	132	64	68	676
-10.4	133	65	69	681
-10.5	134	65	69	683
-10.6	134	65	69	686
-10.7	134	65	69	688
-10.8	135	65	70	691
-10.9	135	65	70	693
-11.0	135	65	70	696
-11.1	136	65	70	698
-11.2	136	66	71	700
-11.3	136	66	71	703
-11.4	137	66	71	705
-11.5	137	66	71	708
-11.6	138	66	72	710
-11.7	138	66	72	713
-11.8	138	66	72	715
-11.9	139	66	72	718
-12.0	139	66	73	720
-12.1	139	67	73	723

TABLE II DISTRICT HEATING TEMPERATURE				
Ambient Temperature, °C	Supply Temperature, °C	Return Temperature, °C	Delta Temperature, °C	Flow m^3/H
-12.2	140	67	73	725
-12.3	140	67	73	728
-12.4	140	67	74	730
-12.5	141	67	74	733
-12.6	141	67	74	735
-12.7	142	67	74	738
-12.8	142	67	75	740
-12.9	142	67	75	743
-13.0	143	68	75	745
-13.1	143	68	75	748
-13.2	143	68	76	750
-13.3	144	68	76	753
-13.4	144	68	76	755
-13.5	144	68	76	758
-13.6	145	68	77	760
-13.7	145	68	77	763
-13.8	146	69	77	765
-14.0	146	69	78	770
-14.1	147	69	78	773
-14.2	147	69	78	775
-14.3	147	69	78	778
-14.4	148	69	79	780
-14.5	148	69	79	783
-14.6	148	69	79	785
-14.7	149	70	79	787
-14.8	149	70	80	790
-14.9	149	70	80	792

TABLE II DISTRICT HEATING TEMPERATURE				
Ambient Temperature, °C	Supply Temperature, °C	Return Temperature, °C	Delta Temperature, °C	Flow m^3/H
-15.0	150	70	80	795
-15.1	150	70	80	797
-15.2	151	70	81	800
-15.3	151	70	81	802
-15.4	151	70	81	805
-15.5	152	70	81	807
-15.6	152	71	82	810
-15.7	152	71	82	812
-15.8	153	71	82	815
-15.9	153	71	82	817
-16.0	153	71	83	820
-16.1	154	71	83	822

Design Heat Exchangers for 1150 m^3/H (3) or 350 m^3/H each.

FIGURE I - Typical Week-Winter Energy Production

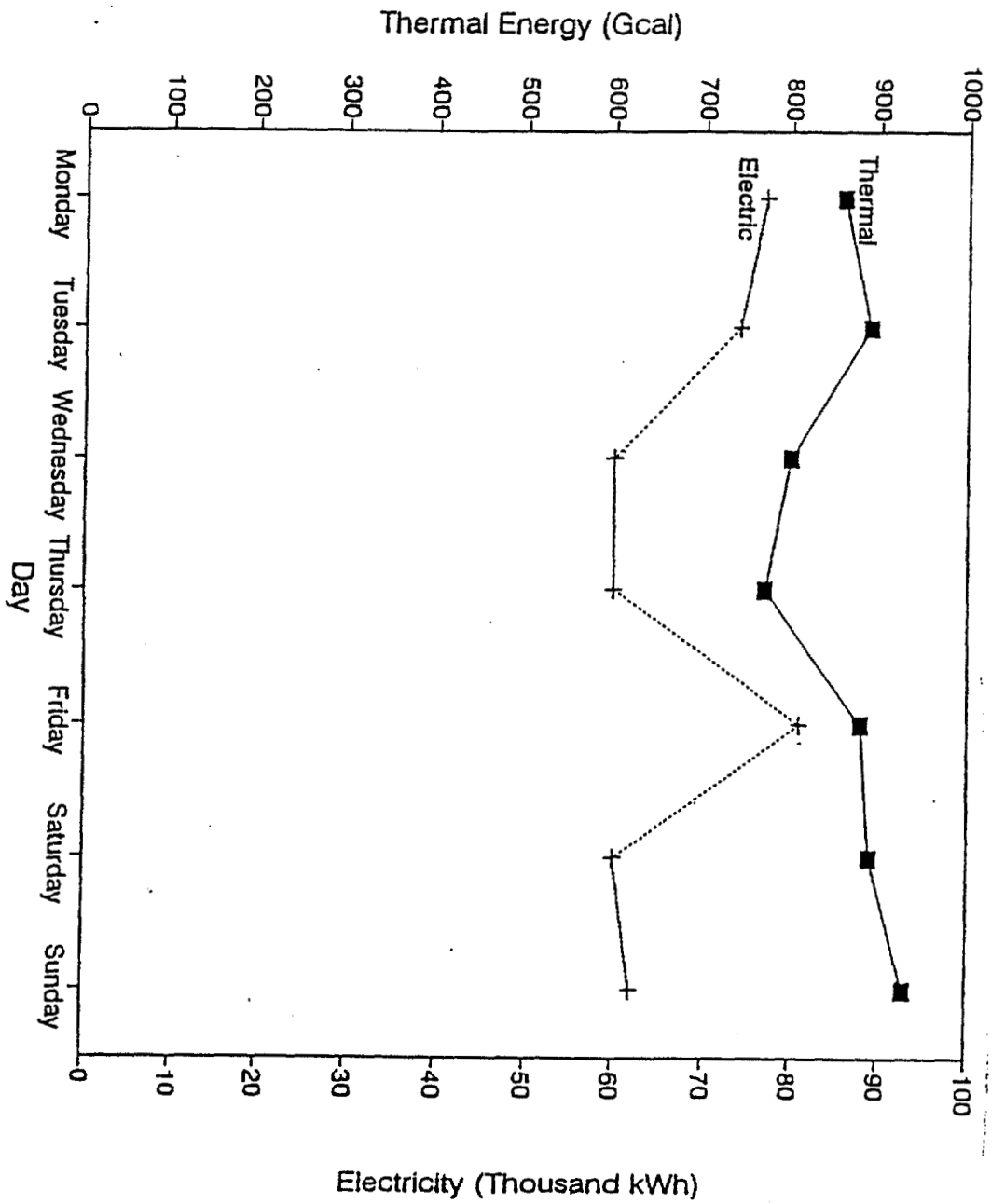

From Resource Management Association of Madison Report

F:\1060\outline.JLT

FIGURE II - Typical Week-Summer 7/16-22
Energy Production

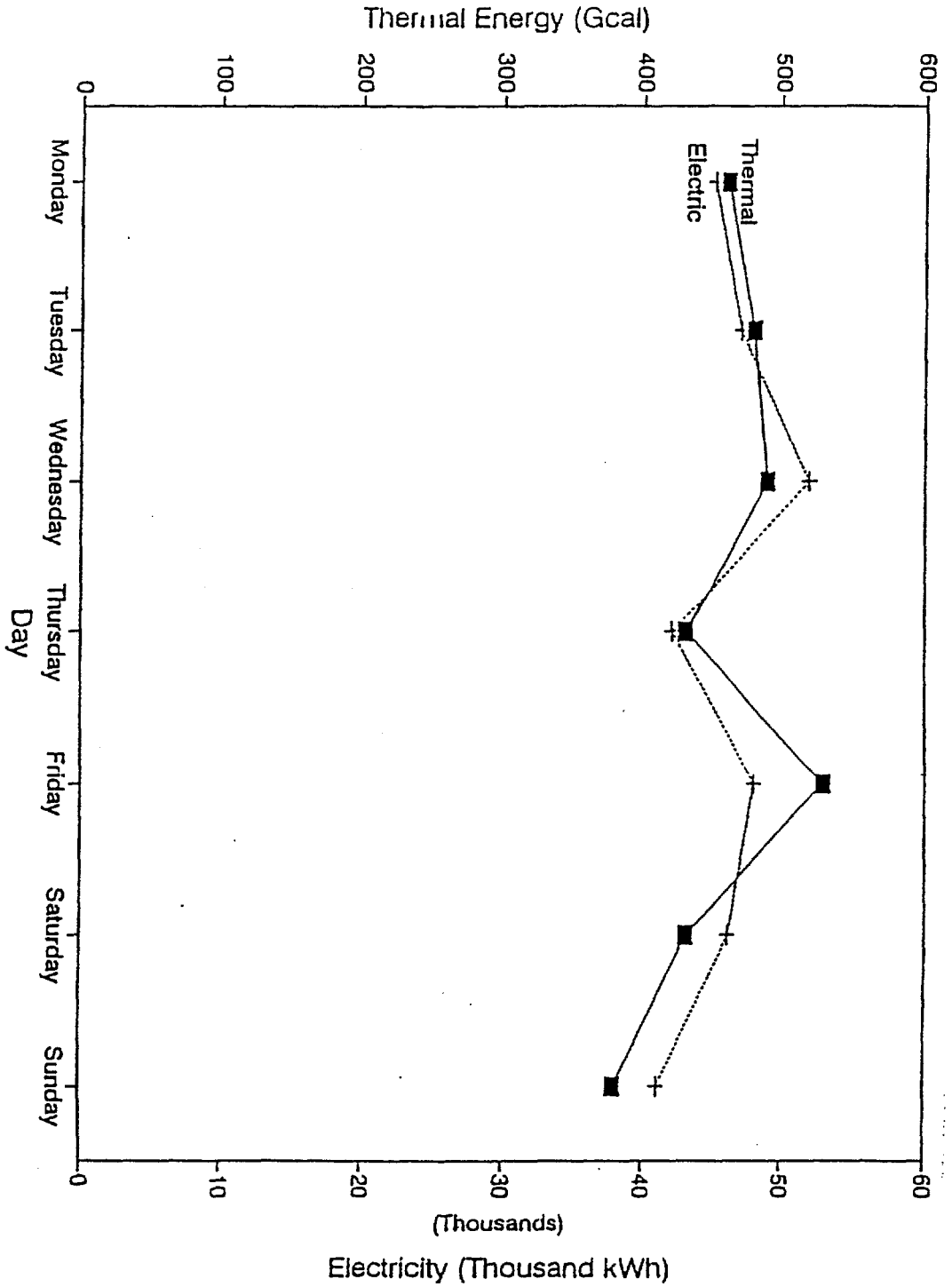

From Resource Management Association of Madison Report

F:\1060\outline.JLT

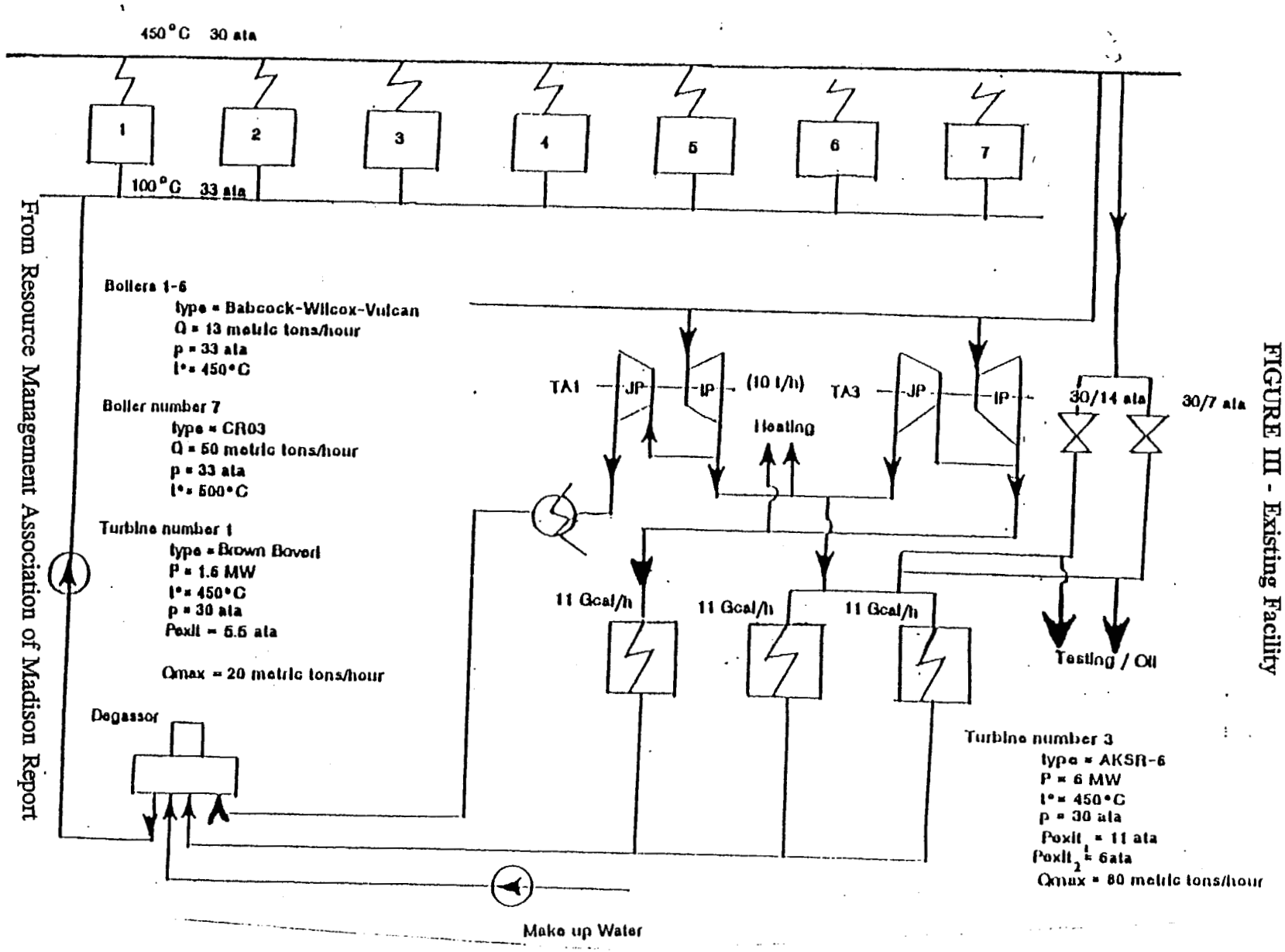

FIGURE III - Existing Facility

FIGURE IV - Electrical System Schematic

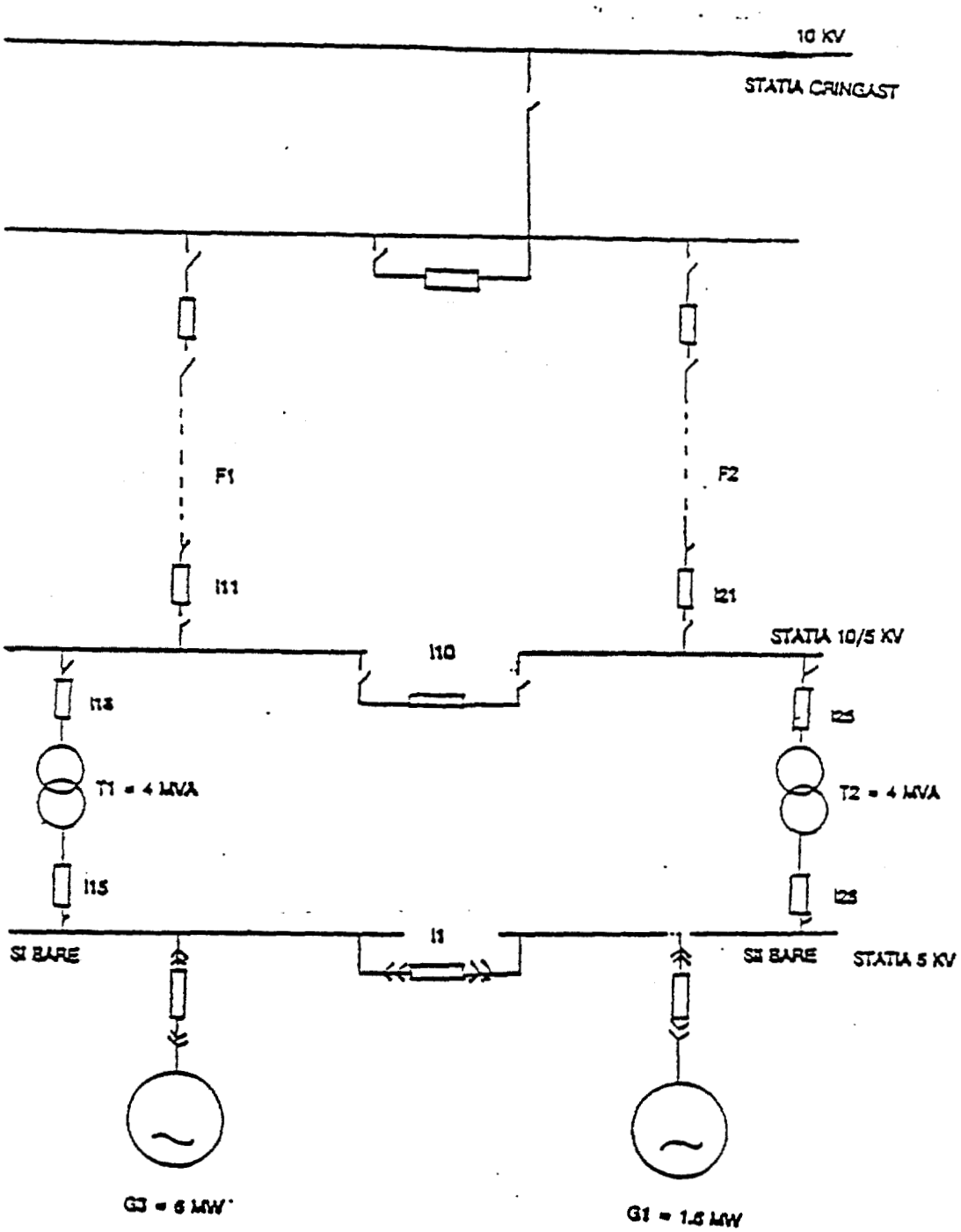

From Resource Management Association of Madison Report

FIGURE V

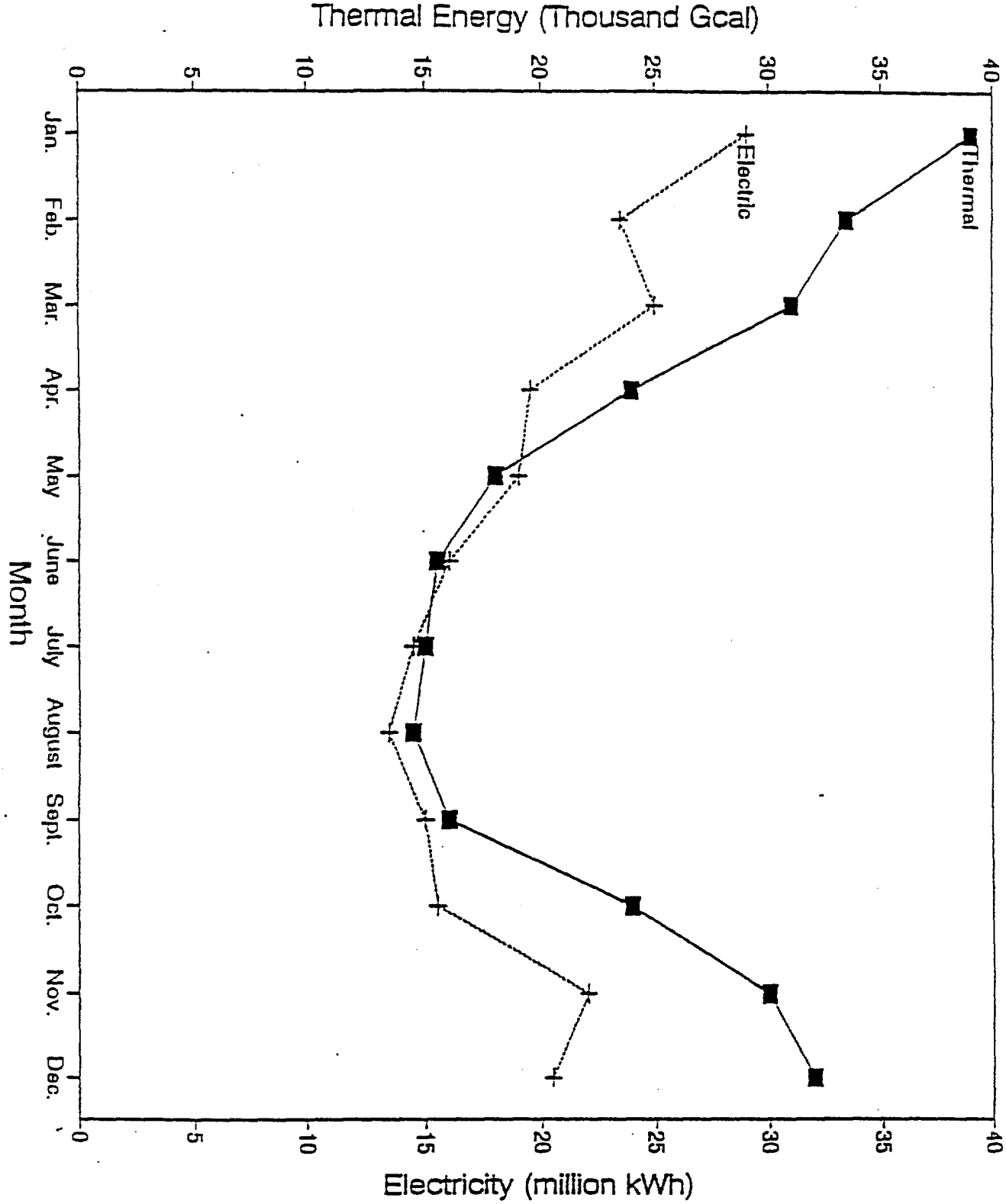

From Resource Management Association of Madison Report

F:\1060\outline.JLT

FIGURE VI - Energy Consumption in 1990

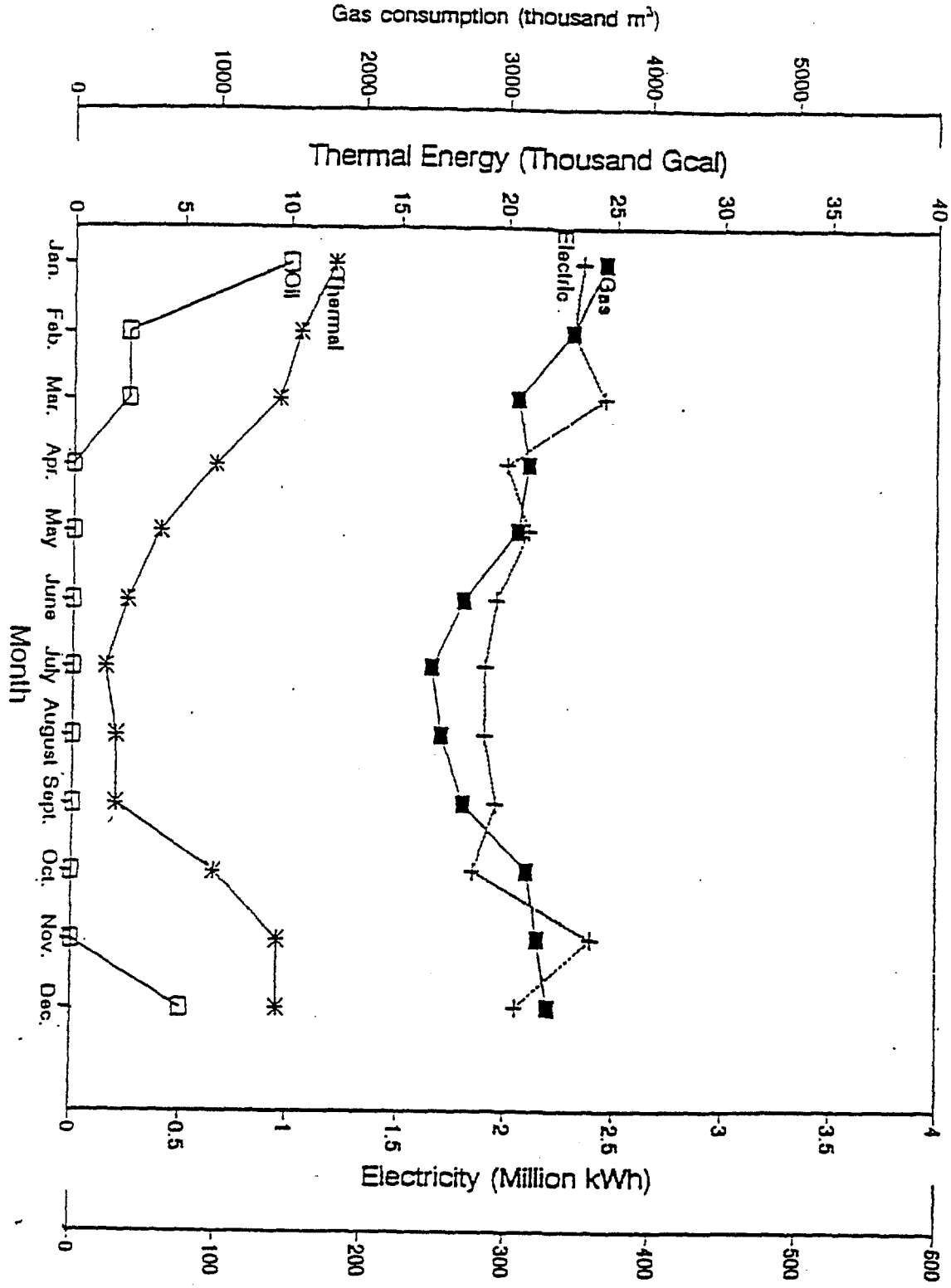

From Resource Managem. Madison Report

FIGURE VII

BUCHAREST GAS DISTRIBUTION

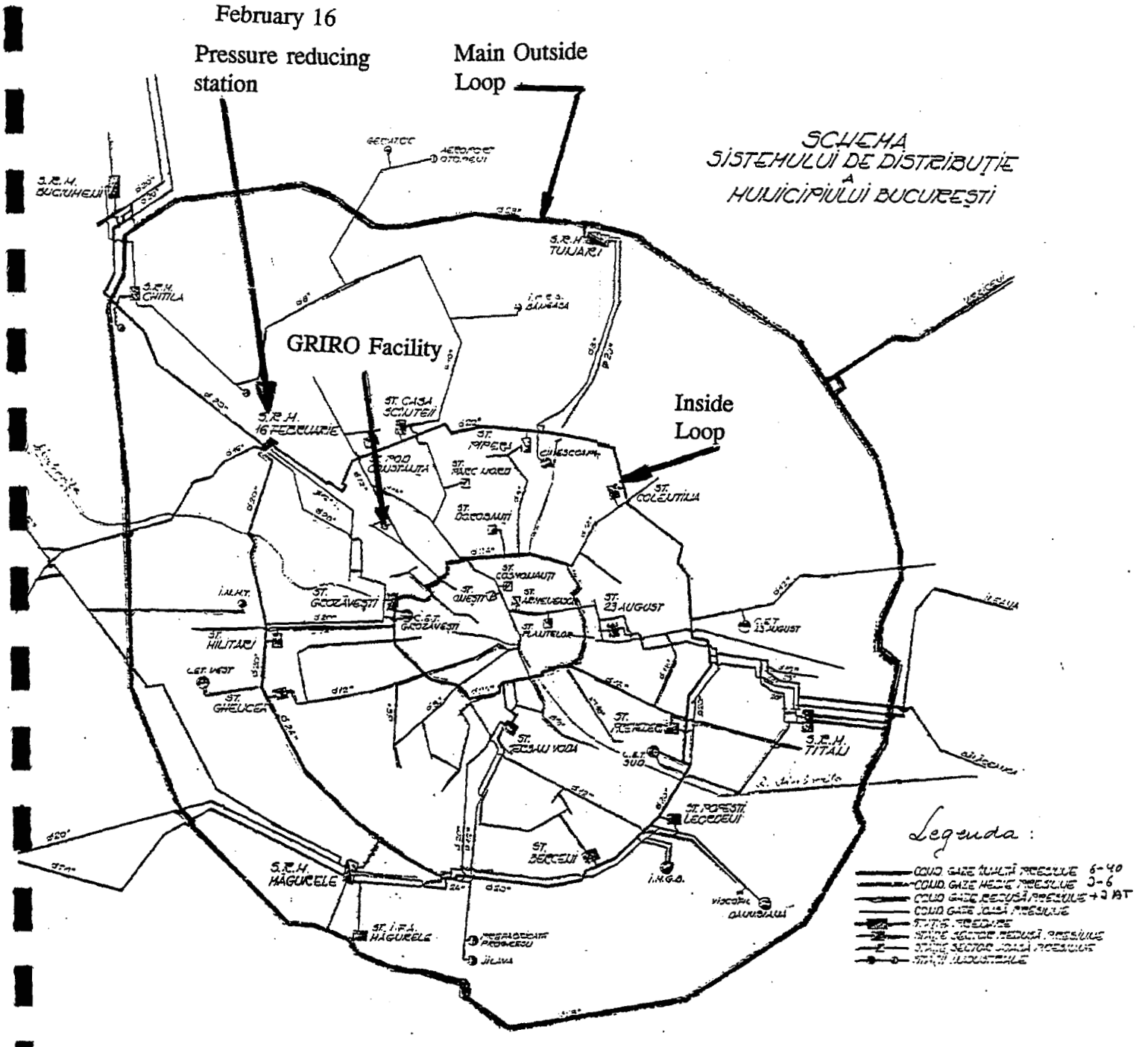

FIGURE VIII

Heat Balance Sheet

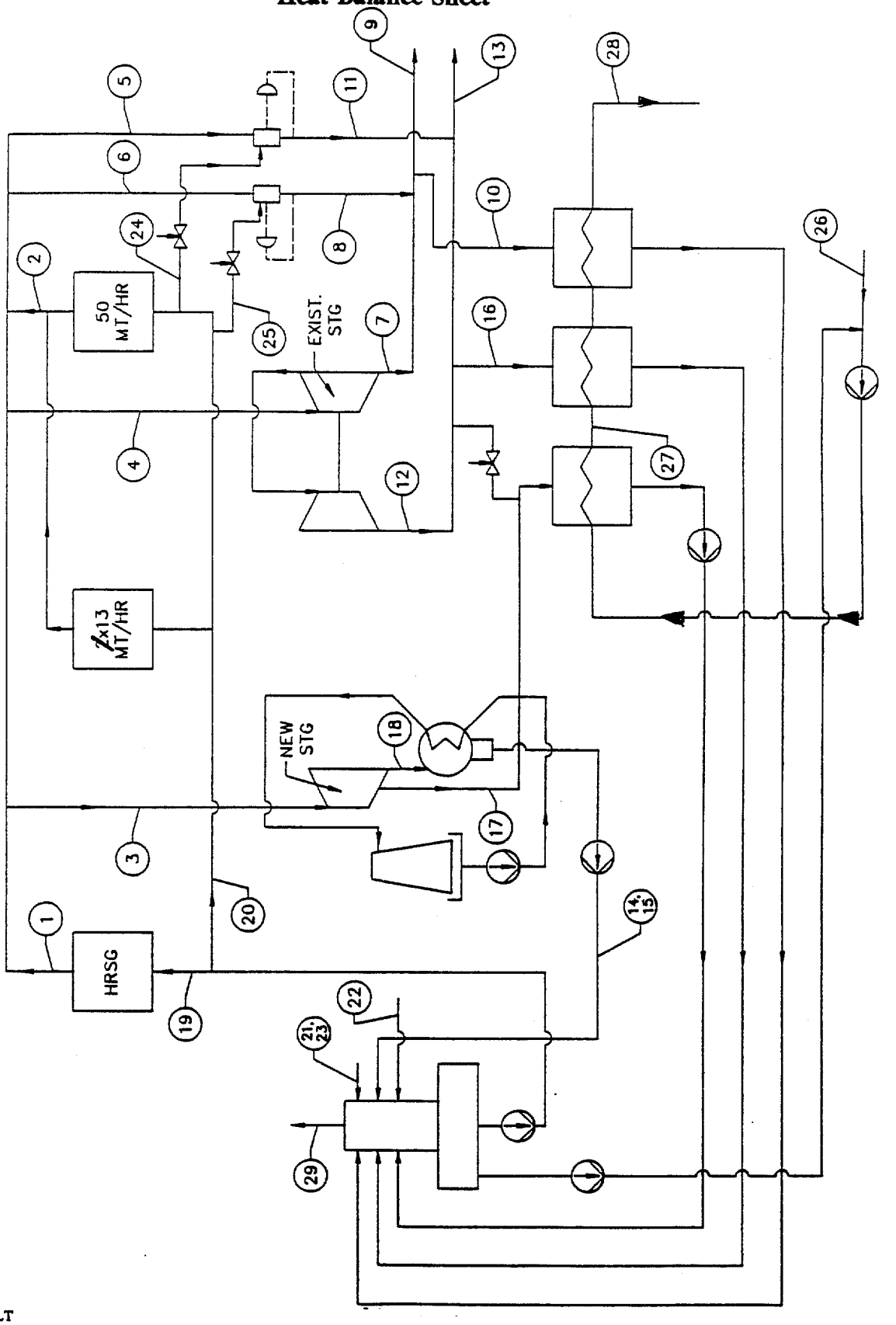

F:\1060\outline.JLT

Case III A
Winter Load (-8 °C). Full Firing

Heat Output from HRSG, Gcal/Hr	69.5
Heat Input with Firing, Gcal/Hr	33.8
Heat Output from Exist 30 Bara Blrs, Gcal/Hr	16.4
Heat with HP Steam Export, Gcal/Hr	11.3
Heat with LP Steam Export, Gcal/Hr	10.8
Heat Output for District Heating, Gcal/Hr	23.1
Heat Output from Peak HTRS, Gcal/Hr	15.4
Total Thermal Output	60.7
Existing Steam Turbine Electrical Output, MWe	5.8
New Steam Turbine Electrical Output, MWe	10.1
GTG Electrical Output, MWe	33.1
Total Plant Electrical Output, MWe	49.0
District Heating	
Heat Output from New LP DW Heaters, Gcal/Hr	23.1
Heat Output from LP Peak HTRS, Gcal/Hr	15.4
Total Heat Output for Distr. Heating, MWth	38.5
Fuel Consumption	
Natural Gas Demand for Firing, N CU M/Hr	4785.7
Fuel Oil Demand for Firing, MT/Hr	4.4
Natural Gas Demand for Full Load Firing, N CU M/Hr	4785.7
Fuel Oil Demand for Full Load Firing, MT/Hr	4.4

Case III A
Winter Load (-8 °C). Full Firing

Point #q	Flow MT/Hr	Temp. °C	Press ATA	Enth Gcal/Hr	
1	100.0	450	30	798.1	Steam from HRSG
2	23.7	450	30	798.1	STM from Exist 30 Bara Blrs
3	52.5	450	30	798.1	STM to the New STG
4	71.2	450	30	798.1	Steam to Existing Turbine
5	0.0	450	30	798.1	30 ATA STM to PRS 30/7
6	0.0	450	30	798.1	30 ATA STM to PRS 30/13
7	15.0	354	13	753.9	13 ATA STM From Exist STG
8	0.0	354	13	753.9	13 ATA STM from PRS 30/13
9	15.0	354	13	753.9	13 ATA STM Export
10	0.0	354	13	753.9	13 ATA STM to Hot Water HTRS
11	0.0	283	7	721.4	7 ATA STM from PRS 30/7
12	56.2	283	7	721.4	7 ATA STM from Exist STG
13	15.0	283	7	721.4	7 ATA STM Export
14	4.9	283	7	721.4	7 ATA STM for FW Deaeration
15	8.5	283	7	721.4	7 ATA STM for HW Deaeration
16	27.7	283	7	721.4	7 ATA STM to HW HTRS
17	42.5	107.1	1.3	649.5	STM from New STG to DWH1
18	10.0	36.2	0.06	564.2	STM from New STG to Condens
19	101.0	104.8	40.0	104.9	Feed Water Flow to HRSG
20	23.9	104.8	40.0	104.9	FW to Exist 30 ATA BLR
21	40.1	7.0	8.0	7.3	Demin Water Flow to FW Deaer
22	0.0	85.0	8.0	85.0	Cond. Return
23	51.6	7.0	8.0	7.3	Demin Water to HW Deaer
24	0.0	104.8	40.0	104.9	FW to PRS 30/13
25	0.0	104.8	40.0	104.9	FW to PRS 30/7
26	560.9	62.0	3.5	62.0	Water from District Heating
27	621.0	99.1	7.5	99.1	Water Downstream DWH1
28	621.0	124.0	7.5	124.0	Water to District Heating
29	0.4	104.8	4.5	640.4	Deaer Vent

Case III A
Summer Load. Full Firing

Heat Output from HRSG, Gcal/Hr	69.5
Heat Input with Firing, Gcal/Hr	33.8
Heat Output from Exist 30 Bara Blrs, Gcal/Hr	12.8
Heat with HP Steam Export, Gcal/Hr	11.3
Heat with LP Steam Export, Gcal/Hr	10.8
Heat Output for District Heating, Gcal/Hr	9.5
Heat Output from Peak HTRS, Gcal/Hr	0.0
Total Thermal Output	31.7
Existing Steam Turbine Electrical Output, MWe	4.0
New Steam Turbine Electrical Output, MWe	17.3
GTG Electrical Output, MWe	33.1
Total Plant Electrical Output, MWe	54.4
District Heating	
Heat Output from New LP DW Heaters, Gcal/Hr	9.5
Heat Output from LP Peak HTRS, Gcal/Hr	0.0
Total Heat Output for Distr. Heating, MWth	9.5
Fuel Consumption	
Natural Gas Demand for Firing, N CU M/Hr	4785.7
Fuel Oil Demand for Firing, MT/Hr	4.4
Natural Gas Demand for Full Load Firing, N CU M/Hr	4785.7
Fuel Oil Demand for Full Load Firing, MT/Hr	4.4

Case III A
Summer Load. Full Firing

Point #	Flow MT/Hr	Temp. °C	Press ATA	Enth Kcal/Hr	
1	100.0	450	30	798.1	Steam from HRSG
2	18.5	450	30	798.1	STM from Exist 30 Bara Blrs
3	67.8	450	30	798.1	STM to the New STG
4	50.6	450	30	798.1	Steam to Existing Turbine
5	0.0	450	30	798.1	30 ATA STM to PRS 30/7
6	0.0	450	30	798.1	30 ATA STM to PRS 30/13
7	15.0	354	13	753.9	13 ATA STM From Exist STG
8	0.0	354	13	753.9	13 ATA STM from PRS 30/13
9	15.0	354	13	753.9	13 ATA STM Export
10	0.0	354	13	753.9	13 ATA STM to Hot Water HTRS
11	0.0	283	7	721.4	7 ATA STM from PRS 30/7
12	35.6	283	7	721.4	7 ATA STM from Exist STG
13	15.0	283	7	721.4	7 ATA STM Export
14	12.1	283	7	721.4	7 ATA STM for FW Deaeration
15	8.5	283	7	721.4	7 ATA STM for HW Deaeration
16	0.0	283	7	721.4	7 ATA STM to HW HTRS
17	18.6	78.0	0.4	617.7	STM from New STG to DWH1
18	49.2	36.2	0.06	564.2	STM from New STG to Condens
19	101.0	104.8	40.0	104.9	Feed Water Flow to HRSG
20	18.7	104.8	40.0	104.9	FW to Exist 30 ATA BLR
21	40.1	7.0	8.0	7.3	Demin Water Flow to FW Deaer
22	0.0	85.0	8.0	85.0	Cond. Return
23	51.6	7.0	8.0	7.3	Demin Water to HW Deaer
24	0.0	104.8	40.0	104.9	FW to PRS 30/13
25	0.0	104.8	40.0	104.9	FW to PRS 30/7
26	319.9	45.0	3.5	45.0	Water from District Heating
27	380.0	70.0	7.5	70.0	Water Downstream DWH1
28	380.0	70.0	7.5	70.0	Water to District Heating
29	0.4	104.8	1.2	640.4	Deaer Vent

Case III A

Summer Load. Full Firing. Steam Injection

Heat Output from HRSG, Gcal/Hr	69.5
Heat Input with Firing, Gcal/Hr	33.8
Heat Output from Exist 30 Bara Blrs, Gcal/Hr	41.0
Heat with HP Steam Export, Gcal/Hr	11.3
Heat with LP Steam Export, Gcal/Hr	10.8
Heat Output for District Heating, Gcal/Hr	9.5
Heat Output from Peak HTRS, Gcal/Hr	0.0
Total Thermal Output	31.7
Existing Steam Turbine Electrical Output, MWe	4.6
New Steam Turbine Electrical Output, MWe	6.6
GTG Electrical Output, MWe	51.9
Total Plant Electrical Output, MWe	63.1
District Heating	
Heat Output from New LP DW Heaters, Gcal/Hr	9.5
Heat Output from LP Peak HTRS, Gcal/Hr	0.0
Total Heat Output for Distr. Heating, MWth	9.5
Fuel Consumption	
Natural Gas Demand for Firing, N CU M/Hr	4785.7
Fuel Oil Demand for Firing, MT/Hr	4.4
Natural Gas Demand for Full Load Firing, N CU M/Hr	4785.7
Fuel Oil Demand for Full Load Firing, MT/Hr	4.4

Case III A

Summer Load. Full Firing. Steam Injection

Point #	Flow MT/Hr	Temp. °C	Press ATA	Enth Kcal/Hr	
1	100.0	450	30	798.1	Steam from HRSG
2	59.1	450	30	798.1	STM from Exist 30 Bara Blrs
3	28.6	450	30	798.1	STM to the New STG
4	57.8	450	30	798.1	Steam to Existing Turbine
5	0.0	450	30	798.1	30 ATA STM to PRS 30/7
6	0.0	450	30	798.1	30 ATA STM to PRS 30/13
7	15.0	354	13	753.9	13 ATA STM From Exist STG
8	0.0	354	13	753.9	13 ATA STM from PRS 30/13
9	15.0	354	13	753.9	13 ATA STM Export
10	0.0	354	13	753.9	13 ATA STM to Hot Water HTRS
11	0.0	283	7	721.4	7 ATA STM from PRS 30/7
12	42.8	283	7	721.4	7 ATA STM from Exist STG
13	15.0	283	7	721.4	7 ATA STM Export
14	19.3	283	7	721.4	7 ATA STM for FW Deaeration
15	8.5	283	7	721.4	7 ATA STM for HW Deaeration
16	0.0	283	7	721.4	7 ATA STM to HW HTRS
17	18.6	78.0	0.4	617.7	STM from New STG to DWH1
18	10.0	36.2	0.06	564.2	STM from New STG to Condens
19	101.0	104.8	40.0	104.9	Feed Water Flow to HRSG
20	59.7	104.8	40.0	104.9	FW to Exist 30 ATA BLR
21	113.1	7.0	8.0	7.3	Demin Water Flow to FW Deaer
22	0.0	85.0	8.0	85.0	Cond. Return
23	51.6	7.0	8.0	7.3	Demin Water to HW Deaer
24	0.0	104.8	40.0	104.9	FW to PRS 30/13
25	0.0	104.8	40.0	104.9	FW to PRS 30/7
26	319.9	45.0	3.5	45.0	Water from District Heating
27	380.0	70.0	7.5	70.0	Water Downstream DWH1
28	380.0	70.0	7.5	70.0	Water to District Heating
29	0.4	104.8	1.2	640.4	Deaer Vent
30	72.6	450	30	798.1	Steam Injection to GTG

Note: Injected steam pressure

Case III A
Summer Load. Full Firing. Maximum Electrical Output
(CTG and all boilers in operation)

Heat Output from HRSG, Gcal/Hr	69.5
Heat Input with Firing, Gcal/Hr	33.8
Heat Output from Exist 30 Bara Blrs, Gcal/Hr	12.8
Heat with HP Steam Export, Gcal/Hr	11.3
Heat with LP Steam Export, Gcal/Hr	10.8
Heat Output for District Heating, Gcal/Hr	9.5
Heat Output from Peak HTRS, Gcal/Hr	0.0
Total Thermal Output	31.7
Existing Steam Turbine Electrical Output, MWe	4.0
New Steam Turbine Electrical Output, MWe	17.3
GTG Electrical Output, MWe	50.4
Total Plant Electrical Output, MWe	71.7
District Heating	
Heat Output from New LP DW Heaters, Gcal/Hr	9.5
Heat Output from LP Peak HTRS, Gcal/Hr	0.0
Total Heat Output for Distr. Heating, MWth, Gcal/Hr	9.5
Fuel Consumption	
Natural Gas Demand for Firing, N CU M/Hr	4785.7
Fuel Oil Demand for Firing, MT/Hr	4.4
Natural Gas Demand for Full Load Firing, N CU M/Hr	4785.7
Fuel Oil Demand for Full Load Firing, MT/Hr	4.4
Natural Gas Demand for Exist Boilers, N CU M/Hr	1814.3
Fuel Oil Demand for Exist Boilers, MT/Hr	1.7

Case III A
Summer Load. Full Firing. Maximum Electrical Output
(CTG and all boilers in operation)

Point #	Flow MT/Hr	Temp. °C	Press ATA	Enth Kcal/Hr	
1	100.0	450	30	798.1	Steam from HRSG
2	18.5	450	30	798.1	STM from Exist 30 Bara Blrs
3	67.8	450	30	798.1	STM to the New STG
4	50.6	450	30	798.1	Steam to Existing Turbine
5	0.0	450	30	798.1	30 ATA STM to PRS 30/7
6	0.0	450	30	798.1	30 ATA STM to PRS 30/13
7	15.0	354	13	753.9	13 ATA STM From Exist STG
8	0.0	354	13	753.9	13 ATA STM from PRS 30/13
9	15.0	354	13	753.9	13 ATA STM Export
10	0.0	354	13	753.9	13 ATA STM to Hot Water HTRS
11	0.0	283	7	721.4	7 ATA STM from PRS 30/7
12	35.6	283	7	721.4	7 ATA STM from Exist STG
13	15.0	283	7	721.4	7 ATA STM Export
14	12.1	283	7	721.4	7 ATA STM for FW Deaeration
15	8.5	283	7	721.4	7 ATA STM for HW Deaeration
16	0.0	283	7	721.4	7 ATA STM to HW HTRS
17	18.6	78.0	0.4	617.7	STM from New STG to DWH1
18	49.2	36.2	0.06	564.2	STM from New STG to Condens
19	101.0	104.8	40.0	104.9	Feed Water Flow to HRSG
20	18.7	104.8	40.0	104.9	FW to Exist 30 ATA BLR
21	40.1	7.0	8.0	7.3	Demin Water Flow to FW Deaer
22	0.0	85.0	8.0	85.0	Cond.. Return
23	51.6	7.0	8.0	7.3	Demin Water to HW Deaer
24	0.0	104.8	40.0	104.9	FW to PRS 30/13
25	0.0	104.8	40.0	104.9	FW to PRS 30/7
26	319.9	45.0	3.5	45.0	Water from District Heating
27	380.0	70.0	7.5	70.0	Water Downstream DWH1
28	380.0	70.0	7.5	70.0	Water to District Heating
29	0.4	104.8	1.2	640.4	Deaer Vent

Table VI-2

GRIRO, ROMANIA - OPTION IA - CAPITAL COST ESTIMATE (1000 $ 1993)
MAXIMIZE ROMANIAN SUPPLY

WORK ITEM	1000 MHS	LABOR	MAT'L	EQUIPMENT	S/C	TOTAL
Dismantle six (6) 13 MT/H boilers	3	15				15
Upgrade existing 50 MT/H boiler - 50% of new boiler costs - Romanian Supply	8	40	116			156
Install one (1) 50 MT/H boiler Romania quote +50%	15	75		348		423
Freight, insurance, spare parts - 9%				31		31
Upgrade existing steam turbine generator 50% of new-Romanian Supply	5	25	412			437
Install three (3) district water heat exchangers-Romania Supply	1	5		126		131
Install two (2) fuel oil pumps					10	10
Other Improvements - Bulk Allowances						
Civil works - 4%					100	100
Mechanical works - Allow					100	100
Electrical works - Allow					100	100
Subtotal	**32**	**160**	**528**	**505**	**310**	**1503**
Project A/E Services - 6%		90				90
Insurance - 2%			32			32
Contingency - 10% of equipment & 20% of remaining costs		50	112	51	62	275
Subtotal		**300**	**672**	**556**	**372**	**1900**
Custom Duty 15%				18		18
Total Costs - 1993 Cost Level		**300**	**672**	**574**	**372**	**1918**
Owner Costs 10%						192
Total Investment (1993 $)						**2110**

F:\1060\outline.JLT

Table VI-2

GRIRO, ROMANIA - OPTION IA - CAPITAL COST ESTIMATE (1000 $ 1993)
INTERNATIONAL SUPPLY

WORK ITEM	1000 MHS	LABOR	MAT'L	EQUIPMENT	S/C	TOTAL
Dismantle six (6) 13 MT/H boilers	3	15				15
Upgrade existing 50 MT/H boiler - 50% of new boiler costs (Romanian Supply)	8	40	116			156
Install one (1) 50 MT/H boilers Riley quote 7/93	15	75		1698		1773
Freight, insurance, spare parts - 15%				255		255
Upgrade existing steam turbine generators 50% of new-(Romanian Supply)	5	25	412			437
Install three (3) district water heat exchangers J.F.D. Tube quote 7/93	1	5		180		185
Install two (2) fuel oil pumps					10	10
Other Improvements - Bulk Allowances						
Civil works - 4%					100	100
Mechanical works - Allow					100	100
Electrical works - Allow					100	100
Subtotal	**32**	**160**	**528**	**2133**	**310**	**3131**
Project A/E Services - 6%		188				188
Insurance - 2%			66			66
Contingency - 10% of equipment & 20% of remaining costs		70	119	213	62	464
Subtotal		**418**	**713**	**2346**	**372**	**3849**
Custom Duty 15%				370		370
Total Costs - 1993 Cost Level		**418**	**713**	**2716**	**372**	**4219**
Owner Costs 10%						**421**
Total Investment (1993 $)						**4640**

F:\1060\outline.JLT

Table VI-2

GRIRO, ROMANIA - OPTION IB - CAPITAL COST ESTIMATE (1000 $ 1993)
MAXIMIZE ROMANIAN SUPPLY

WORK ITEM	1000 MHS	LABOR	MAT'L	EQUIPMENT	S/C	TOTAL
Dismantle six (6) 13 MT/H boilers	3	15				15
Upgrade existing 50 MT/H boiler - 50% of new boiler costs - Romanian Supply	8	40	116			156
Install two (2) 25 MT/H boilers Romania quote +50%	20	100		489		589
Freight, insurance, spare parts - 9%				44		44
Upgrade existing steam turbine generators 50% of new-Romanian Supply	5	25	412			437
Install three (3) district water heat exchangers-Romania Supply	1	5		126		131
Install two (2) fuel oil pumps					10	10
Other Improvements - Bulk Allowances						
Civil works - 4%					100	100
Mechanical works - Allow					100	100
Electrical works - Allow					100	100
Subtotal	**37**	**185**	**528**	**659**	**310**	**1682**
Project A/E Services - 6%		101				101
Insurance - 2%			36			36
Contingency - 10% of equipment & 20% of remaining costs		57	113	66	62	298
Subtotal		**343**	**677**	**725**		**2117**
Custom Duty 15%				18		18
Total Costs - 1993 Cost Level		**343**	**677**	**743**	**372**	**2135**
Owner Costs 10%						**215**
Total Investment (1993 $)						**2350**

F:\1060\outline.JLT

Table VI-2

GRIRO, ROMANIA - OPTION IB - CAPITAL COST ESTIMATE (1000 $ 1993)
INTERNATIONAL SUPPLY

WORK ITEM	1000 MHS	LABOR	MAT'L	EQUIPMENT	S/C	TOTAL
Dismantle six (6) 13 MT/H boilers	3	15				15
Upgrade existing 50 MT/H boiler - 50% of new boiler costs - Romanian Supply	8	40	116			156
Install two (2) 25 MT/H boilers Riley quote 7/93	20	100		1700		1800
Freight, insurance, spare parts - 15%				255		255
Upgrade existing steam turbine generators- 50% of new (Romanian Supply)	5	25	412			437
Install three (3) district water heat exchangers J.F.D. Tube quote 7/93	1	5		180		185
Install two (2) fuel oil pumps					10	10
Other Improvements - Bulk Allowances						
Civil works - 4%					100	100
Mechanical works - Allow					100	100
Electrical works - Allow					100	100
Subtotal	**37**	**185**	**528**	**2135**	**310**	**3158**
Project A/E Services - 6%		190				190
Insurance - 2%			67			67
Contingency - 10% of equipment & 20% of remaining costs		75	119	214	62	470
Subtotal		**450**	**714**	**2349**	**372**	**3885**
Custom Duty 15%				371		371
Total Costs - 1993 Cost Level		**450**	**714**	**2720**	**372**	**4256**
Owner Costs 10%						424
Total Investment (1993 $)						**4680**

F:\1060\outline.JLT

Table VI-2

GRIRO, ROMANIA - OPTION II - CAPITAL COST ESTIMATE (1000 $ 1993)
MAXIMIZE ROMANIAN SUPPLY

WORK ITEM	1000 MHS	LABOR	MAT'L	EQUIPMENT	S/C	TOTAL
Dismantle six (6) 13 MT/H boilers + one (1) 1.6 MWe	4	20				20
Upgrade existing 50 MT/H boiler - 50% of new boiler costs - Romanian Supply	8	40	116			156
Install two (2) 55 MT/H boilers Romanian Supply +50%	30	150		849		999
Freight, insurance, spare parts - 9%				76		76
Upgrade existing steam turbine generators 50% of new (Romanian Supply)	5	25	412			437
Install one (1) steam turbine generator - 6 MWe (Incl. freight, etc.) Romanian Supply +50%	10	50		1238		1288
Install three (3) district water heat exchangers-Romanian Supply	1	5		126		131
Install two (2) fuél oil pumps					10	10
Other Improvements - Bulk Allowances						
Civil works - 4%					300	300
Mechanical works - Allow					300	300
Electrical works - Allow					300	300
Subtotal	**58**	**290**	**528**	**2289**	**910**	**4017**
Project A/E Services - 6%		241				241
Insurance - 2%			86			86
Contingency - 10% of equipment & 20% of remaining costs		107	123	229	182	641
Subtotal		**638**	**737**	**2518**	**1092**	**4985**
Custom Duty 15%				54		54
Total Costs - 1993 Cost Level		**638**	**737**	**2572**	**1092**	**5039**
Owner Costs 10%						**501**
Total Investment (1993 $)						**5540**

F:\1060\outline.JLT

Table VI-2

GRIRO, ROMANIA - OPTION II - CAPITAL COST ESTIMATE (1000 $ 1993)
INTERNATIONAL SUPPLY

WORK ITEM	1000 MHS	LABOR	MAT'L	EQUIPMENT	S/C	TOTAL
Dismantle six (6) 13 MT/H boilers	3	15				15
Upgrade existing 50 MT/H boiler - 50% of new boiler costs - Romanian Supply	8	40	116			156
Install two (2) 55 MT/H boilers Riley quote 7/93	30	150		3736		3886
Freight, insurance, spare parts - 15%				560		560
Dismantle one (1) steam turbine generator 1.6 MWe	1	5				5
Upgrade existing steam turbine generator- 50% of new (Romanian Supply)	5	25	412			437
Install one (1) steam turbine generator - 6 MWe - GE quote Hungary (Incl. freight, etc.)	10	50		2300		2350
Install three (3) district water heat exchangers J.F.D. Tube quote 7/93	1	5		180		185
Install two (2) fuel oil pumps					10	10
Other Improvements - Bulk Allowances						
Civil works - 4%					300	300
Mechanical works - Allow					300	300
Electrical works - Allow					300	300
Subtotal	**58**	**290**	**528**	**6776**	**910**	**8504**
Project A/E Services - 6%		510				510
Insurance - 2%			181			181
Contingency - 10% of equipment & 20% of remaining costs		160	142	678	182	1162
Subtotal		**960**	**851**	**7454**	**1092**	**10357**
Custom Duty 15%				1172		1172
Total Costs - 1993 Cost Level		**960**	**851**	**8626**	**1092**	**11529**
Owner Costs 10%						**1151**
Total Investment (1993 $)						**12680**

F:\1060\outline.JLT

Table VI-2

GRIRO, ROMANIA - OPTION IIIA - CAPITAL COST ESTIMATE (1000 $ 1993)
MAXIMIZE ROMANIAN SUPPLY

WORK ITEM	1000 MHS	LABOR	MAT'L	EQUIPMENT	S/C	TOTAL
Dismantle four (4) 13 MT/H boilers	3	15				15
Upgrade existing 50 MT/H boiler and 2-13 MT/H - 50% of new boiler costs-Romanian Supply	12	60	210			270
Install LM 5000 gas turbine generator Stewart Stevenson quote 6/93	30	150		13500		13650
Freight, insurance, spare parts - 15%				2025		2025
Install vertical HRSG Deltak quote 6/93	30	150		2825		2975
Freight Insurance, spare parts - 15%				424		424
Dismantle one (1) steam turbine generator 1.6 MWe	1	5				5
Upgrade existing 6 MWe steam turbine generator - 50% of new STG (Romanian Supply)	5	25	412			437
Install one (1) new steam turbine generator - 20 MWe - Romanian Supply +50%	15	75		2595		2670
Install three (3) district water heat exchangers Romanian Supply	1	5		126		131
Install 2 F.O. Pumps					10	10
Other Improvements - Bulk Allowances						
Civil works - 4%					1000	1000
Mechanical works					1000	1000
Electrical works					1000	1000
Subtotal	**97**	**485**	**622**	**21495**	**3010**	**25612**
Project A/E Services - 6%		1537				1537
Insurance - 2%			543			543
Contingency - 10% of equipment & 20% of remaining costs		404	233	2150	602	3389
Subtotal		**2426**	**1398**	**23645**	**3612**	**31081**

F:\1060\outline.JLT

Table VI-2

GRIRO, ROMANIA - OPTION IIIA - CAPITAL COST ESTIMATE (1000 $ 1993)
MAXIMIZE ROMANIAN SUPPLY

WORK ITEM	1000 MHS	LABOR	MAT'L	EQUIPMENT	S/C	TOTAL
Subtotal		**2426**	**1398**	**23645**	**3612**	**31081**
Custom Duty 15%				3278		3278
Total Costs - 1993 Cost Level		**2426**	**1398**	**26923**	**3612**	**34359**
Owner Costs 10%						3441
Total Investment (1993 $)						**37800**

Table VI-2

GRIRO, ROMANIA - OPTION IIIA - CAPITAL COST ESTIMATE (1000 $ 1993)
INTERNATIONAL SUPPLY

WORK ITEM	1000 MHS	LABOR	MAT'L	EQUIPMENT	S/C	TOTAL
Dismantle four (4) 13 MT/H boilers	3	15				15
Upgrade existing 50 MT/H boiler and 2-13 MT/H - 50% of new boiler costs - Romanian Supply	12	60	210			270
Install one (1) LM 5000 gas turbine generators Stewart Stevenson quote 6/93	30	150		13500		13650
Freight, insurance, spare parts - 15%				2025		2025
Install two (2) vertical HRSG's Deltak quote 6/93	30	150		2825		2975
Freight, Insurance, spare parts - 15%				424		424
Dismantle one (1) steam turbine generator 1.6 MWe	1	5				5
Upgrade existing 6 MWe steam turbine generator - 50% of new STG Romanian Supply	5	25	412			437
Install one (1) new steam turbine generator - 20 MWe - GE quote Hungary (Incl. Frt., etc.)	15	75		4950		5025
Install three (3) district water heat exchangers J.F.D. Tube quote 7/93	1	5		180		185
Install 2 F.O. Pumps					10	10
Other Improvements - Bulk Allowances						
Civil works - 4%					1000	1000
Mechanical works - Allow					1000	1000
Electrical works - Allow					1000	1000
Subtotal	97	485	622	23904	3010	28021
Project A/E Services - 6%		1681				1681
Insurance - 2%			594			594
Contingency - 10% of equipment & 20% of remaining costs		433	243	2390	602	3668
Subtotal		2599	1459	26294	3612	33964

Table VI-2

GRIRO, ROMANIA - OPTION IIIA - CAPITAL COST ESTIMATE (1000 $ 1993)
INTERNATIONAL SUPPLY

WORK ITEM	1000 MHS	LABOR	MAT'L	EQUIPMENT	S/C	TOTAL
Subtotal		**2599**	**1459**	**26294**	**3612**	**33964**
Custom Duty 15%				4124		4124
Total Costs - 1993 Cost Level		**2599**	**1459**	**30418**	**3612**	**38088**
Owner Costs 10%						3812
Total Investment (1993 $)						**41900**

F:\1060\outline.JLT

Table VI-2

GRIRO, ROMANIA - OPTION IIIB - CAPITAL COST ESTIMATE (1000 $ 1993)
MAXIMIZE ROMANIAN SUPPLY

WORK ITEM	1000 MHS	LABOR	MAT'L	EQUIPMENT	S/C	TOTAL
Dismantle four (4) 13 MT/H boilers	3	15				15
Upgrade existing 50 MT/H boiler and 2-13 MT/H - 50% of new boiler costs - Romanian Supply	12	60	210			270
Install two (2) LM 1600 gas turbine generators Stewart Stevenson quote 6/93	40	200		15000		15200
Freight, insurance, spare parts - 15%				2250		2250
Install two (2) vertical HRSG's Deltak quote 6/93	40	200		3370		3570
Freight Insurance, spare parts - 9%				506		506
Dismantle one (1) steam turbine generator 1.6 MWe	1	5				5
Upgrade existing 6 MWe steam turbine generator - 50% of new STG Romanian Supply	5	25	412			437
Install one (1) new steam turbine generator - 17 MWe - Romanian Supply +50% (Incl. Frt., etc.)	15	75		2595		2670
Install three (3) district water heat exchangers Romanian Supply	1	5		126		131
Install 2 F.O. Pumps					10	10
Other Improvements - Bulk Allowances						
Mechanical works					1200	1200
Civil works					1200	1200
Electrical works - Allow					1200	1200
Subtotal	117	585	622	23847	3610	28664
Project A/E Services - 6%		1720				1720
Insurance - 2%			608			608
Contingency - 10% of equipment & 20% of remaining costs		461	246	2385	722	3814
Subtotal		2766	1476	26232	4332	34806
Custom Duty 15%				3702		3702
Total Costs - 1993 Cost Level		2766	1476	29934	4332	38508
Owner Costs 10%						3852
Total Investment (1993 $)						42360

F:\1060\outline.JLT

Table VI-2

GRIRO, ROMANIA - OPTION IIIB - CAPITAL COST ESTIMATE (1000 $ 1993)
INTERNATIONAL SUPPLY

WORK ITEM	1000 MHS	LABOR	MAT'L	EQUIPMENT	S/C	TOTAL
Dismantle four (4) 13 MT/H boilers	3	15				15
Upgrade existing 50 MT/H boiler and 2-13 MT/H - 50% of new boiler costs - Romanian Supply	12	60	210			270
Install two (2) LM 1600 gas turbine generators Stewart Stevenson quote 6/93	40	200		15000		15200
Freight, insurance, spare parts - 15%				2250		2250
Install two (2) vertical HRSG's Deltak quote 6/93	40	200		3370		3570
Freight, Insurance, spare parts - 15%				506		506
Dismantle one (1) steam turbine generator 1.6 MWe	1	5				5
Upgrade existing 6 MWe steam turbine generator - 50% of new STG Romanian Supply	5	25	412			437
Install one (1) new steam turbine generator - 17 MWe - GE quote Hungary (Incl. Frt., etc.)	15	75		4950		5025
Install three (3) district water heat exchangers J.F.D. Tube quote 7/93	1	5		180		185
Install 2 F.O. Pumps					10	10
Other Improvements - Bulk Allowances						
Civil works - 4%					1200	1200
Mechanical works - Allow					1200	1200
Electrical works - Allow					1200	1200
Subtotal	117	585	622	26256	3610	31073
Project A/E Services - 6%		1864				1864
Insurance - 2%			659			659
Contingency - 10% of equipment & 20% of remaining costs		490	256	2626	722	4094
Subtotal		2939	1537	28882	4332	37690

F:\1060\outline.JLT

Table VI-2

GRIRO, ROMANIA - OPTION IIIB - CAPITAL COST ESTIMATE (1000 $ 1993)
INTERNATIONAL SUPPLY

WORK ITEM	1000 MHS	LABOR	MAT'L	EQUIPMENT	S/C	TOTAL
Subtotal		2939	1537	28882	4332	37690
Custom Duty 15%				4548		4548
Total Costs - 1993 Cost Level		2939	1537	33430	4332	42238
Owner Costs 10%						4222
Total Investment (1993 $)						46460

F:\1060\outline.JLT

TABLE VII–2

JOB # 1060 ROMANIA PROJECT

K & M ENGINEERING & CONSULTING CORPORATION

REHABILITATED POWER PLANTS
GRIRO

BENEFIT–COST ANALYSIS (MLEI)

PRICED: MAHYLIS
DATE: 30–Aug–93

ITEM#	YEAR	ELECTRIC SALES	HEAT SALES	TOTAL BENEFIT	INVEST COST	FUEL COST	MAINT. COST	FACTORY OVERHEADS	TOTAL COST
01	1993								
02	1994								
03	1995				411				
04	1996				1,235				
05	1997	1,041	2,320			944	27	27	
06	1998	1,041	2,320			944	27	27	
07	1999	1,041	2,320			944	50	27	
08	2000	1,041	2,320			944	27	27	
09	2001	1,041	2,320			944	27	27	
10	2002	1,041	2,320			944	100	27	
11	2003	1,041	2,320			944	27	27	
12	2004	1,041	2,320			944	27	27	
13	2005	1,041	2,320			944	50	27	
14	2006	1,041	2,320			944	27	27	
15	2007	1,041	2,320			944	27	27	
16	2008	1,041	2,320			944	150	27	
17	2009	1,041	2,320			944	27	27	
18	2010	1,041	2,320			944	27	27	
19	2011	1,041	2,320			944	50	27	
20	2012	1,041	2,320			944	27	27	
21	2013	1,041	2,320			944	27	27	
22	2014	1,041	2,320			944	300	27	
23	2015	1,041	2,320			944	27	27	
24	2016	1,041	2,320			944	27	27	
25	2017								
26	2018								
27	2019								
28	2020								
	PV	6,732	15,003	21,735	1,192	6,105	302	175	7,774

CPV(BENEFIT)/CPV(COST) 2.796

NOTES:
OPTION IA MAXIMIZES ROMANIAN SUPPLY.

TABLE VII-2

JOB # 1060 ROMANIA PROJECT

K & M ENGINEERING & CONSULTING CORPORATION

REHABILITATED POWER PLANTS
GRIRO

BENEFIT-COST ANALYSIS (MLEI)

PRICED: MAHYLIS
DATE: 30-Aug-93

ITEM#	YEAR	ELECTRIC SALES	HEAT SALES	TOTAL BENEFIT	INVEST COST	FUEL COST	MAINT. COST	FACTORY OVERHEADS	TOTAL COST
01	1993								
02	1994								
03	1995				905				
04	1996				2,714				
05	1997	1,041	2,320			944	27	27	
06	1998	1,041	2,320			944	27	27	
07	1999	1,041	2,320			944	50	27	
08	2000	1,041	2,320			944	27	27	
09	2001	1,041	2,320			944	27	27	
10	2002	1,041	2,320			944	100	27	
11	2003	1,041	2,320			944	27	27	
12	2004	1,041	2,320			944	27	27	
13	2005	1,041	2,320			944	50	27	
14	2006	1,041	2,320			944	27	27	
15	2007	1,041	2,320			944	27	27	
16	2008	1,041	2,320			944	150	27	
17	2009	1,041	2,320			944	27	27	
18	2010	1,041	2,320			944	27	27	
19	2011	1,041	2,320			944	50	27	
20	2012	1,041	2,320			944	27	27	
21	2013	1,041	2,320			944	27	27	
22	2014	1,041	2,320			944	300	27	
23	2015	1,041	2,320			944	27	27	
24	2016	1,041	2,320			944	27	27	
25	2017								
26	2018								
27	2019								
28	2020								
	PV	6,732	15,003	21,735	2,621	6,105	302	175	9,203

CPV(BENEFIT)/CPV(COST) 2.362

NOTES:
OPTION IA INTERNATIONAL SUPPLY.

TABLE VII-2

JOB # 1060 ROMANIA PROJECT

K & M ENGINEERING & CONSULTING CORPORATION

REHABILITATED POWER PLANTS
GRIRO

BENEFIT-COST ANALYSIS (MLEI)

PRICED: MAHYLIS
DATE: 30-Aug-93

ITEM#	YEAR	ELECTRIC SALES	HEAT SALES	TOTAL BENEFIT	INVEST COST	FUEL COST	MAINT. COST	FACTORY OVERHEADS	TOTAL COST
01	1993								
02	1994								
03	1995				459				
04	1996				1,375				
05	1997	1,041	2,320			944	30	30	
06	1998	1,041	2,320			944	30	30	
07	1999	1,041	2,320			944	50	30	
08	2000	1,041	2,320			944	30	30	
09	2001	1,041	2,320			944	30	30	
10	2002	1,041	2,320			944	100	30	
11	2003	1,041	2,320			944	30	30	
12	2004	1,041	2,320			944	30	30	
13	2005	1,041	2,320			944	50	30	
14	2006	1,041	2,320			944	30	30	
15	2007	1,041	2,320			944	30	30	
16	2008	1,041	2,320			944	150	30	
17	2009	1,041	2,320			944	30	30	
18	2010	1,041	2,320			944	30	30	
19	2011	1,041	2,320			944	50	30	
20	2012	1,041	2,320			944	30	30	
21	2013	1,041	2,320			944	30	30	
22	2014	1,041	2,320			944	300	30	
23	2015	1,041	2,320			944	30	30	
24	2016	1,041	2,320			944	30	30	
25	2017								
26	2018								
27	2019								
28	2020								
	PV	6,732	15,003	21,735	1,329	6,105	316	194	7,943

CPV(BENEFIT)/CPV(COST) 2.736

NOTES:
OPTION IB MAXIMIZES ROMANIAN SUPPLY.

TABLE VII–2

JOB # 1060 ROMANIA PROJECT

K & M ENGINEERING & CONSULTING CORPORATION

REHABILITATED POWER PLANTS
GRIRO

BENEFIT–COST ANALYSIS (MLEI)

PRICED: MAHYLIS
DATE: 30–Aug–93

ITEM#	YEAR	ELECTRIC SALES	HEAT SALES	TOTAL BENEFIT	INVEST COST	FUEL COST	MAINT. COST	FACTORY OVERHEADS	TOTAL COST
01	1993								
02	1994								
03	1995				913				
04	1996				2,738				
05	1997	1,041	2,320			944	30	30	
06	1998	1,041	2,320			944	30	30	
07	1999	1,041	2,320			944	50	30	
08	2000	1,041	2,320			944	30	30	
09	2001	1,041	2,320			944	30	30	
10	2002	1,041	2,320			944	100	30	
11	2003	1,041	2,320			944	30	30	
12	2004	1,041	2,320			944	30	30	
13	2005	1,041	2,320			944	50	30	
14	2006	1,041	2,320			944	30	30	
15	2007	1,041	2,320			944	30	30	
16	2008	1,041	2,320			944	150	30	
17	2009	1,041	2,320			944	30	30	
18	2010	1,041	2,320			944	30	30	
19	2011	1,041	2,320			944	50	30	
20	2012	1,041	2,320			944	30	30	
21	2013	1,041	2,320			944	30	30	
22	2014	1,041	2,320			944	300	30	
23	2015	1,041	2,320			944	30	30	
24	2016	1,041	2,320			944	30	30	
25	2017								
26	2018								
27	2019								
28	2020								
	PV	6,732	15,003	21,735	2,645	6,105	316	194	9,259

CPV(BENEFIT)/CPV(COST) 2.347

NOTES:
OPTION IB INTERNATIONAL SUPPLY

TABLE VII–2

JOB # 1060 ROMANIA PROJECT

K & M ENGINEERING & CONSULTING CORPORATION

REHABILITATED POWER PLANTS
GRIRO

BENEFIT–COST ANALYSIS (MLEI)

PRICED: MAHYLIS
DATE: 30–Aug–93

ITEM#	YEAR	ELECTRIC SALES	HEAT SALES	TOTAL BENEFIT	INVEST COST	FUEL COST	MAINT. COST	FACTORY OVERHEADS	TOTAL COST
01	1993								
02	1994								
03	1995				1,080				
04	1996				3,241				
05	1997	3,413	2,320			3,039	71	71	
06	1998	3,413	2,320			3,039	71	71	
07	1999	3,413	2,320			3,039	100	71	
08	2000	3,413	2,320			3,039	71	71	
09	2001	3,413	2,320			3,039	71	71	
10	2002	3,413	2,320			3,039	200	71	
11	2003	3,413	2,320			3,039	71	71	
12	2004	3,413	2,320			3,039	71	71	
13	2005	3,413	2,320			3,039	100	71	
14	2006	3,413	2,320			3,039	71	71	
15	2007	3,413	2,320			3,039	71	71	
16	2008	3,413	2,320			3,039	300	71	
17	2009	3,413	2,320			3,039	71	71	
18	2010	3,413	2,320			3,039	71	71	
19	2011	3,413	2,320			3,039	100	71	
20	2012	3,413	2,320			3,039	71	71	
21	2013	3,413	2,320			3,039	71	71	
22	2014	3,413	2,320			3,039	600	71	
23	2015	3,413	2,320			3,039	71	71	
24	2016	3,413	2,320			3,039	71	71	
25	2017								
26	2018								
27	2019								
28	2020								
	PV	22,072	15,003	37,075	3,130	19,653	682	459	23,924

CPV(BENEFIT)/CPV(COST) 1.550

NOTES:
OPTION II MAXIMIZES ROMANIAN SUPPLY.

TABLE VII–2

JOB # 1060 ROMANIA PROJECT

K & M ENGINEERING & CONSULTING CORPORATION

REHABILITATED POWER PLANTS
GRIRO

BENEFIT–COST ANALYSIS (MLEI)

PRICED: MAHYLIS
DATE: 30–Aug–93

ITEM#	YEAR	ELECTRIC SALES	HEAT SALES	TOTAL BENEFIT	INVEST COST	FUEL COST	MAINT. COST	FACTORY OVERHEADS	TOTAL COST
01	1993								
02	1994								
03	1995				2,473				
04	1996				7,418				
05	1997	3,413	2,320			3,039	71	71	
06	1998	3,413	2,320			3,039	71	71	
07	1999	3,413	2,320			3,039	100	71	
08	2000	3,413	2,320			3,039	71	71	
09	2001	3,413	2,320			3,039	71	71	
10	2002	3,413	2,320			3,039	200	71	
11	2003	3,413	2,320			3,039	71	71	
12	2004	3,413	2,320			3,039	71	71	
13	2005	3,413	2,320			3,039	100	71	
14	2006	3,413	2,320			3,039	71	71	
15	2007	3,413	2,320			3,039	71	71	
16	2008	3,413	2,320			3,039	300	71	
17	2009	3,413	2,320			3,039	71	71	
18	2010	3,413	2,320			3,039	71	71	
19	2011	3,413	2,320			3,039	100	71	
20	2012	3,413	2,320			3,039	71	71	
21	2013	3,413	2,320			3,039	71	71	
22	2014	3,413	2,320			3,039	600	71	
23	2015	3,413	2,320			3,039	71	71	
24	2016	3,413	2,320			3,039	71	71	
25	2017								
26	2018								
27	2019								
28	2020								
	PV	22,072	15,003	37,075	7,165	19,653	682	459	27,958

CPV(BENEFIT)/CPV(COST) 1.326

NOTES:
OPTION II INTERNATIONAL SUPPLY

TABLE VII–2

JOB # 1060 ROMANIA PROJECT

K & M ENGINEERING & CONSULTING CORPORATION

REHABILITATED POWER PLANTS
GRIRO

BENEFIT–COST ANALYSIS (MLEI)

PRICED: MAHYLIS
DATE: 30–Aug–93

ITEM#	YEAR	ELECTRIC SALES	HEAT SALES	TOTAL BENEFIT	INVEST COST	FUEL COST	MAINT. COST	FACTORY OVERHEADS	TOTAL COST
01	1993								
02	1994								
03	1995				4,423				
04	1996				7,371				
05	1997				17,690				
06	1998	13,787	2,320			6,440	479	479	
07	1999	13,787	2,320			6,440	479	479	
08	2000	13,787	2,320			6,440	479	479	
09	2001	13,787	2,320			6,440	479	479	
10	2002	13,787	2,320			6,440	479	479	
11	2003	13,787	2,320			6,440	1000	479	
12	2004	13,787	2,320			6,440	479	479	
13	2005	13,787	2,320			6,440	479	479	
14	2006	13,787	2,320			6,440	479	479	
15	2007	13,787	2,320			6,440	479	479	
16	2008	13,787	2,320			6,440	479	479	
17	2009	13,787	2,320			6,440	1500	479	
18	2010	13,787	2,320			6,440	479	479	
19	2011	13,787	2,320			6,440	479	479	
20	2012	13,787	2,320			6,440	479	479	
21	2013	13,787	2,320			6,440	479	479	
22	2014	13,787	2,320			6,440	479	479	
23	2015	13,787	2,320			6,440	3000	479	
24	2016	13,787	2,320			6,440	479	479	
25	2017	13,787	2,320			6,440	479	479	
26	2018								
27	2019								
28	2020								
	PV	81,797	13,764	95,562	20,134	38,208	3,627	2,842	64,811

CPV(BENEFIT)/CPV(COST) 1.474

NOTES:
OPTION IIIA MAXIMIZES ROMANIAN SUPPLY.

TABLE VII–2

JOB # 1060 ROMANIA PROJECT

K & M ENGINEERING & CONSULTING CORPORATION

REHABILITATED POWER PLANTS
GRIRO

BENEFIT–COST ANALYSIS (MLEI)

PRICED: MAHYLIS
DATE: 30–Aug–93

ITEM#	YEAR	ELECTRIC SALES	HEAT SALES	TOTAL BENEFIT	INVEST COST	FUEL COST	MAINT. COST	FACTORY OVERHEADS	TOTAL COST
01	1993								
02	1994								
03	1995				4,902				
04	1996				8,171				
05	1997				19,609				
06	1998	13,787	2,320			6,440	479	479	
07	1999	13,787	2,320			6,440	479	479	
08	2000	13,787	2,320			6,440	479	479	
09	2001	13,787	2,320			6,440	479	479	
10	2002	13,787	2,320			6,440	479	479	
11	2003	13,787	2,320			6,440	1000	479	
12	2004	13,787	2,320			6,440	479	479	
13	2005	13,787	2,320			6,440	479	479	
14	2006	13,787	2,320			6,440	479	479	
15	2007	13,787	2,320			6,440	479	479	
16	2008	13,787	2,320			6,440	479	479	
17	2009	13,787	2,320			6,440	1500	479	
18	2010	13,787	2,320			6,440	479	479	
19	2011	13,787	2,320			6,440	479	479	
20	2012	13,787	2,320			6,440	479	479	
21	2013	13,787	2,320			6,440	479	479	
22	2014	13,787	2,320			6,440	479	479	
23	2015	13,787	2,320			6,440	3000	479	
24	2016	13,787	2,320			6,440	479	479	
25	2017	13,787	2,320			6,440	479	479	
26	2018								
27	2019								
28	2020								
	PV	81,797	13,764	95,562	22,318	38,208	3,627	2,842	66,995

CPV(BENEFIT)/CPV(COST) 1.426

NOTES:
OPTION IIIA INTERNATIONAL SUPPLY

TABLE VII–2

JOB # 1060 ROMANIA PROJECT

K & M ENGINEERING & CONSULTING CORPORATION

REHABILITATED POWER PLANTS
GRIRO

BENEFIT–COST ANALYSIS (MLEI)

PRICED: MAHYLIS
DATE: 30–Aug–93

ITEM#	YEAR	ELECTRIC SALES	HEAT SALES	TOTAL BENEFIT	INVEST COST	FUEL COST	MAINT. COST	FACTORY OVERHEADS	TOTAL COST
01	1993								
02	1994								
03	1995				4,956				
04	1996				8,260				
05	1997				19,824				
06	1998	11,071	2,320			5,714	555	555	
07	1999	11,071	2,320			5,714	555	555	
08	2000	11,071	2,320			5,714	555	555	
09	2001	11,071	2,320			5,714	555	555	
10	2002	11,071	2,320			5,714	555	555	
11	2003	11,071	2,320			5,714	1000	555	
12	2004	11,071	2,320			5,714	555	555	
13	2005	11,071	2,320			5,714	555	555	
14	2006	11,071	2,320			5,714	555	555	
15	2007	11,071	2,320			5,714	555	555	
16	2008	11,071	2,320			5,714	555	555	
17	2009	11,071	2,320			5,714	1500	555	
18	2010	11,071	2,320			5,714	555	555	
19	2011	11,071	2,320			5,714	555	555	
20	2012	11,071	2,320			5,714	555	555	
21	2013	11,071	2,320			5,714	555	555	
22	2014	11,071	2,320			5,714	555	555	
23	2015	11,071	2,320			5,714	3000	555	
24	2016	11,071	2,320			5,714	555	555	
25	2017	11,071	2,320			5,714	555	555	
26	2018								
27	2019								
28	2020								
	PV	65,683	13,764	79,448	22,563	33,901	4,020	3,293	63,777

CPV(BENEFIT)/CPV(COST) 1.246

NOTES:
OPTION IIIB MAXIMIZES ROMANIAN SUPPLY.

TABLE VII-2

JOB # 1060 ROMANIA PROJECT

K & M ENGINEERING & CONSULTING CORPORATION

REHABILITATED POWER PLANTS
GRIRO

BENEFIT-COST ANALYSIS (MLEI)

PRICED: MAHYLIS
DATE: 30-Aug-93

ITEM#	YEAR	ELECTRIC SALES	HEAT SALES	TOTAL BENEFIT	INVEST COST	FUEL COST	MAINT. COST	FACTORY OVERHEADS	TOTAL COST
01	1993								
02	1994								
03	1995				5,435				
04	1996				9,060				
05	1997				21,743				
06	1998	11,071	2,320			5,714	555	555	
07	1999	11,071	2,320			5,714	555	555	
08	2000	11,071	2,320			5,714	555	555	
09	2001	11,071	2,320			5,714	555	555	
10	2002	11,071	2,320			5,714	555	555	
11	2003	11,071	2,320			5,714	1000	555	
12	2004	11,071	2,320			5,714	555	555	
13	2005	11,071	2,320			5,714	555	555	
14	2006	11,071	2,320			5,714	555	555	
15	2007	11,071	2,320			5,714	555	555	
16	2008	11,071	2,320			5,714	555	555	
17	2009	11,071	2,320			5,714	1500	555	
18	2010	11,071	2,320			5,714	555	555	
19	2011	11,071	2,320			5,714	555	555	
20	2012	11,071	2,320			5,714	555	555	
21	2013	11,071	2,320			5,714	555	555	
22	2014	11,071	2,320			5,714	555	555	
23	2015	11,071	2,320			5,714	3000	555	
24	2016	11,071	2,320			5,714	555	555	
25	2017	11,071	2,320			5,714	555	555	
26	2018								
27	2019								
28	2020								
	PV	65,683	13,764	79,448	24,747	33,901	4,020	3,293	65,961

CPV(BENEFIT)/CPV(COST) 1.204

NOTES:
OPTION IIIB INTERNATIONAL SUPPLY

TABLE VII-3
Annual Power, Heat Production and Fuel Consumption Assumptions

Option	IA	IB	II	IIIA	IIIB
MWe	6	6	12	60	60
Thermal Production T cal/yr	616	616	616	616	616
Power Production Gwh	61	61	145	516	419
Fuel Consumption					
Heavy Fuel Oil MT	1025	1025	2454	20,240	22,520
Natural Gas Million M^3	126	126	295	50	50
Light Fuel Oil MT				59,016	48,528

TABLE VII-4

THE PARAMETERS USED ARE AS FOLLOWS:

OPTIONS	UNIT	IA	IB	II	IIIA	IIIB
I. TODAY'S POWER PLANT						
A. Current Production						
Electricity	Gwh/yr	23.6	23.6	23.6	23.6	23.6
Heat	Gcal/yr	296,000	296,000	296,000	296,000	296,000
Fuel - Fuel Oil Natural Gas	MT/yr Mil CM	398 48.8	398 48.8	398 48.8	398 48.8	398 48.8
B. Production - Using Rehabilitated Power Plants						
Electricity	GWh/yr	60.8	60.8	145.5		
Heat	GCal/yr	616,000	616,000	616,000	49,000	49,000
Fuel - Heavy Fuel Oil Natural Gas	MT/yr Mil. M^3	1025 125.7	1025 125.7	2454 296	0 49.7	0 49.7
II. COMBINED CYCLE						
GT Electricity Capacity W/S	MWe	-	-	-	49/62.1	41.9/43.2
Winter Operation - Heat Capacity	GCal/hr	-	-	-	77.0	77.0
Summer Operation - Heat Capacity	GCal/hr	-	-	-	26.6	26.6
GT Utilization Hours	h/yr	8000	8000	8000	8000	8000
• Winter Operation	h/yr	4600	4600	4600	4600	4600
• Summer Operation	h/yr	3400	3400	3400	3400	3400
Electric Production	GWh/yr	-	-	-	516	419
Heat Production	GCal/yr	-	-	-	567,000	567,000
Fuel - Light Oil/Heavy Oil	MT/yr	-	-	-	59,016/20,240	48,528/22,520
Heat Rate	KJ/KWh	-	-	-	9469/10030	9773/10030

TABLE VII - 4 (Continued)

THE PARAMETERS USED ARE AS FOLLOWS:

OPTIONS	UNIT	IA	IB	II	IIIA	IIIB
III.INVESTMENT COST -	MUS$					
MAX. ROMANIAN SUPPLY		2.23	2.48	5.85	40.88	47.27
INT'L SUPPLY		4.89	4.94	13.37	44.06	51.85
IV. UNIT COSTS						
Fuel - Energy charge						
• Light Oil - GTG	Lei/MT				84,825	84,825
• Heavy Oil (Boilers)	Lei/MT	71,800	71,800	71,800	71,800	71,800
• Natural Gas	Lei/m^3	11.7	11.7	11.7	11.7	11.7
Electric						
• Power Charge	Lei/kwh	28	28	28	28	28
Heat Supply						
• Energy Charge Average	Lei/Gcal	7248	7248	7248	7248	7248
Maintenance	% Invest	1.5%	1.5%	1.5%	1.5%	1.5%
Factory Overhead	% Invest	1.5%	1.5%	1.5%	1.5%	1.5%
V. OTHER						

Discount Rate 9%
Currency 1 US$ = 780 Lei
Capacity Factor (Availability) 91%

TABLE VII-5

GRIRO, ROMANIA ADDITIONAL BENEFITS/COSTS							
					Options		
			IA	IB	II	IIIA	IIIB
Operating Benefits - Yearly	Unit	Rate					
Electric Sales:		28 Lei/kwh					
New PP	mil Lei		1702	1702	4074	14,448	11,732
Today's PP	mil Lei		661	661	661	661	661
Increase	mil Lei		1041	1041	3413	13,787	11,071
Heat Sales		7248 Lei/Gcal					
New PP	mil Lei		4465	4465	4465	4465	4465
Today's PP	mil Lei		2145	2145	2145	2145	2145
Increase	mil Lei		2320	2320	2320	2320	2320
Total Increase - Benefits	mil Lei		3361	3361	5733	16107	13391
Operating Costs - Yearly							
Fuel		Various					
New PP	mil Lei		1544	1544	3639	7040	6314
Today's PP	mil Lei		600	600	600	600	600
Increase - Fuel	mil Lei		944	944	3039	6440	5714
Increase - Maintenance	mil Lei		27	27	71	479	555
Increase - Factory Overhead	mil Lei		27	27	71	479	555

mil = million

TABLE VII-7

JOB# 1060 ROMANIA PROJECT — K & M ENGINEERING & CONSULTING CORPORATION

REHABILITATED POWER PLANTS — RATE OF RETURN ESTIMATE — PRICED: MAHYLIS

GRIRO — DATE: 30-Aug-93

ITEM#	DESCRIPTION	PRODUCTION ELECTRIC (GWH)	PRODUCTION HEAT (Tcal)	BENEFITS-SALES ELECTRIC ($MILL)	BENEFITS-SALES HEAT ($MILL)	BENEFITS-SALES TOTAL ($MILL)	COSTS INVEST. ($MILL)	COSTS FUEL ($MILL)	COSTS O&M ($MILL)	COSTS TOTAL ($MILL)	NET BENEFITS ($MILL)	PRESENT VALUES CUMUL. ($MILL)	PRESENT VALUES YEARLY ($MILL)
01	1993												
02	1994												
03	1995						0.53			0.53	-0.53	-0.38	-0.38
04	1996						1.58			1.58	-1.58	-1.38	-1.01
05	1997	37	320	1.34	2.97	4.31		1.21	0.07	1.28	3.03	0.34	1.72
06	1998	37	320	1.34	2.97	4.31		1.21	0.07	1.28	3.03	1.87	1.53
07	1999	37	320	1.34	2.97	4.31		1.21	0.10	1.31	3.00	3.23	1.36
08	2000	37	320	1.34	2.97	4.31		1.21	0.07	1.28	3.03	4.45	1.22
09	2001	37	320	1.34	2.97	4.31		1.21	0.07	1.28	3.03	5.54	1.09
10	2002	37	320	1.34	2.97	4.31		1.21	0.16	1.37	2.94	6.49	0.95
11	2003	37	320	1.34	2.97	4.31		1.21	0.07	1.28	3.03	7.36	0.87
12	2004	37	320	1.34	2.97	4.31		1.21	0.07	1.28	3.03	8.14	0.78
13	2005	37	320	1.34	2.97	4.31		1.21	0.10	1.31	3.00	8.83	0.69
14	2006	37	320	1.34	2.97	4.31		1.21	0.07	1.28	3.03	9.45	0.62
15	2007	37	320	1.34	2.97	4.31		1.21	0.07	1.28	3.03	10.00	0.55
16	2008	37	320	1.34	2.97	4.31		1.21	0.23	1.44	2.87	10.47	0.47
17	2009	37	320	1.34	2.97	4.31		1.21	0.07	1.28	3.03	10.91	0.44
18	2010	37	320	1.34	2.97	4.31		1.21	0.07	1.28	3.03	11.30	0.39
19	2011	37	320	1.34	2.97	4.31		1.21	0.10	1.31	3.00	11.65	0.35
20	2012	37	320	1.34	2.97	4.31		1.21	0.07	1.28	3.03	11.96	0.31
21	2013	37	320	1.34	2.97	4.31		1.21	0.07	1.28	3.03	12.24	0.28
22	2014	37	320	1.34	2.97	4.31		1.21	0.42	1.63	2.68	12.47	0.22
23	2015	37	320	1.34	2.97	4.31		1.21	0.07	1.28	3.03	12.69	0.22
24	2016	37	320	1.34	2.97	4.31		1.21	0.07	1.28	3.03	12.89	0.20

IRR = 1.11999 PV= 1

ASSUMPTIONS:
1.THE PRODUCTION IS ADDITIONAL PRODUCTION RESULTING FROM THE INVESTMENT.
2.ELECTRICITY PRICE $35.90/MWeH.
3.HEAT PRICE $9.29/Gcal.
4.INVESTMENTS ARE IN CONSTANT 1993 PRICES AND INCLUDE CONTINGENCIES,INTEREST DURING CONSTRUCTION.
5.THE FUEL ESTIMATE IS FOR ADDITIONAL FUEL CONSUMPTION.
6.FUTURE ESCALATION,INTEREST ON LOANS,CLIENT OR OWNER COSTS ARE NOT INCLUDED IN THIS ANALYSIS.
7.EXCHANGE RATE US$1 = 780LEI.
8.FOR OPTION IA-ROMANIAN SUPPLY.

TABLE VII-7

JOB# 1060 ROMANIA PROJECT — K & M ENGINEERING & CONSULTING CORPORATION

REHABILITATED POWER PLANTS — RATE OF RETURN ESTIMATE — PRICED: MAHYLIS

GRIRO — DATE: 30-Aug-93

ITEM#	DESCRIPTION	PRODUCTION ELECTRIC (GWH)	PRODUCTION HEAT (Tcal)	BENEFITS-SALES ELECTRIC ($MILL)	BENEFITS-SALES HEAT ($MILL)	BENEFITS-SALES TOTAL ($MILL)	COSTS INVEST. ($MILL)	COSTS FUEL ($MILL)	COSTS O&M ($MILL)	COSTS TOTAL ($MILL)	NET BENEFITS ($MILL)	PRESENT VALUES CUMUL. ($MILL)	PRESENT VALUES YEARLY ($MILL)
01	1993												
02	1994												
03	1995						1.16			1.16	-1.16	-0.83	-0.83
04	1996						3.48			3.48	-3.48	-3.04	-2.21
05	1997	37	320	1.34	2.97	4.31		1.21	0.07	1.28	3.03	-1.32	1.72
06	1998	37	320	1.34	2.97	4.31		1.21	0.07	1.28	3.03	0.22	1.53
07	1999	37	320	1.34	2.97	4.31		1.21	0.10	1.31	3.00	1.57	1.36
08	2000	37	320	1.34	2.97	4.31		1.21	0.07	1.28	3.03	2.80	1.22
09	2001	37	320	1.34	2.97	4.31		1.21	0.07	1.28	3.03	3.89	1.09
10	2002	37	320	1.34	2.97	4.31		1.21	0.16	1.37	2.94	4.83	0.95
11	2003	37	320	1.34	2.97	4.31		1.21	0.07	1.28	3.03	5.71	0.87
12	2004	37	320	1.34	2.97	4.31		1.21	0.07	1.28	3.03	6.48	0.78
13	2005	37	320	1.34	2.97	4.31		1.21	0.10	1.31	3.00	7.17	0.69
14	2006	37	320	1.34	2.97	4.31		1.21	0.07	1.28	3.03	7.79	0.62
15	2007	37	320	1.34	2.97	4.31		1.21	0.07	1.28	3.03	8.34	0.55
16	2008	37	320	1.34	2.97	4.31		1.21	0.23	1.44	2.87	8.81	0.47
17	2009	37	320	1.34	2.97	4.31		1.21	0.07	1.28	3.03	9.25	0.44
18	2010	37	320	1.34	2.97	4.31		1.21	0.07	1.28	3.03	9.65	0.39
19	2011	37	320	1.34	2.97	4.31		1.21	0.10	1.31	3.00	9.99	0.35
20	2012	37	320	1.34	2.97	4.31		1.21	0.07	1.28	3.03	10.31	0.31
21	2013	37	320	1.34	2.97	4.31		1.21	0.07	1.28	3.03	10.59	0.28
22	2014	37	320	1.34	2.97	4.31		1.21	0.42	1.63	2.68	10.81	0.22
23	2015	37	320	1.34	2.97	4.31		1.21	0.07	1.28	3.03	11.03	0.22
24	2016	37	320	1.34	2.97	4.31		1.21	0.07	1.28	3.03	11.23	0.20

IRR = 0.56970 PV= 0

ASSUMPTIONS:
1.THE PRODUCTION IS ADDITIONAL PRODUCTION RESULTING FROM THE INVESTMENT.
2.ELECTRICITY PRICE $35.90/MWeH.
3.HEAT PRICE $9.29/Gcal.
4.INVESTMENTS ARE IN CONSTANT 1993 PRICES AND INCLUDE CONTINGENCIES,INTEREST DURING CONSTRUCTION.
5.THE FUEL ESTIMATE IS FOR ADDITIONAL FUEL CONSUMPTION.
6.FUTURE ESCALATION,INTEREST ON LOANS,CLIENT OR OWNER COSTS ARE NOT INCLUDED IN THIS ANALYSIS.
7.EXCHANGE RATE US$1 = 780LEI.
8.FOR OPTION IA-INTERNATIONAL SUPPLY.

TABLE VII-7

JOB# 1060 ROMANIA PROJECT — K & M ENGINEERING & CONSULTING CORPORATION

REHABILITATED POWER PLANTS — RATE OF RETURN ESTIMATE — PRICED: MAHYLIS

GRIRO — DATE: 30-Aug-93

ITEM#	DESCRIPTION	PRODUCTION ELECTRIC (GWH)	PRODUCTION HEAT (Tcal)	BENEFITS-SALES ELECTRIC ($MILL)	BENEFITS-SALES HEAT ($MILL)	BENEFITS-SALES TOTAL ($MILL)	COSTS INVEST. ($MILL)	COSTS FUEL ($MILL)	COSTS O&M ($MILL)	COSTS TOTAL ($MILL)	NET BENEFITS ($MILL)	PRESENT VALUES CUMUL. ($MILL)	PRESENT VALUES YEARLY ($MILL)
01	1993												
02	1994												
03	1995						0.59			0.72	-0.72	-0.51	-0.51
04	1996						1.76			1.76	-1.76	-1.63	-1.12
05	1997	37	320	1.34	2.97	4.31		1.21	0.07	1.28	3.03	0.09	1.72
06	1998	37	320	1.34	2.97	4.31		1.21	0.08	1.29	3.02	1.62	1.53
07	1999	37	320	1.34	2.97	4.31		1.21	0.10	1.31	3.00	2.97	1.36
08	2000	37	320	1.34	2.97	4.31		1.21	0.07	1.28	3.03	4.20	1.22
09	2001	37	320	1.34	2.97	4.31		1.21	0.08	1.29	3.02	5.29	1.09
10	2002	37	320	1.34	2.97	4.31		1.21	0.17	1.38	2.93	6.23	0.94
11	2003	37	320	1.34	2.97	4.31		1.21	0.07	1.28	3.03	7.10	0.87
12	2004	37	320	1.34	2.97	4.31		1.21	0.08	1.29	3.02	7.87	0.77
13	2005	37	320	1.34	2.97	4.31		1.21	0.10	1.31	3.00	8.56	0.69
14	2006	37	320	1.34	2.97	4.31		1.21	0.07	1.28	3.03	9.18	0.62
15	2007	37	320	1.34	2.97	4.31		1.21	0.08	1.29	3.02	9.73	0.55
16	2008	37	320	1.34	2.97	4.31		1.21	0.23	1.44	2.87	10.20	0.47
17	2009	37	320	1.34	2.97	4.31		1.21	0.07	1.28	3.03	10.64	0.44
18	2010	37	320	1.34	2.97	4.31		1.21	0.08	1.29	3.02	11.03	0.39
19	2011	37	320	1.34	2.97	4.31		1.21	0.10	1.31	3.00	11.38	0.35
20	2012	37	320	1.34	2.97	4.31		1.21	0.07	1.28	3.03	11.70	0.31
21	2013	37	320	1.34	2.97	4.31		1.21	0.08	1.29	3.02	11.98	0.28
22	2014	37	320	1.34	2.97	4.31		1.21	0.42	1.63	2.68	12.20	0.22
23	2015	37	320	1.34	2.97	4.31		1.21	0.07	1.28	3.03	12.42	0.22
24	2016	37	320	1.34	2.97	4.31		1.21	0.08	1.29	3.02	12.62	0.20

IRR = 0.95378 PV= 1

ASSUMPTIONS:
1.THE PRODUCTION IS ADDITIONAL PRODUCTION RESULTING FROM THE INVESTMENT.
2.ELECTRICITY PRICE $35.90/MWeH.
3.HEAT PRICE $9.29/Gcal.
4.INVESTMENTS ARE IN CONSTANT 1993 PRICES AND INCLUDE CONTINGENCIES,INTEREST DURING CONSTRUCTION.
5.THE FUEL ESTIMATE IS FOR ADDITIONAL FUEL CONSUMPTION.
6.FUTURE ESCALATION,INTEREST ON LOANS,CLIENT OR OWNER COSTS ARE NOT INCLUDED IN THIS ANALYSIS.
7.EXCHANGE RATE US$1 = 780LEI.
8.FOR OPTION IB-ROMANIAN SUPPLY.

TABLE VII-7

JOB# 1060 ROMANIA PROJECT — K & M ENGINEERING & CONSULTING CORPORATION

REHABILITATED POWER PLANTS — RATE OF RETURN ESTIMATE — PRICED: MAHYLIS
GRIRO — DATE: 30-Aug-93

ITEM#	DESCRIPTION	PRODUCTION ELECTRIC (GWH)	PRODUCTION HEAT (Tcal)	BENEFITS-SALES ELECTRIC ($MILL)	BENEFITS-SALES HEAT ($MILL)	BENEFITS-SALES TOTAL ($MILL)	COSTS INVEST. ($MILL)	COSTS FUEL ($MILL)	COSTS O&M ($MILL)	COSTS TOTAL ($MILL)	NET BENEFITS ($MILL)	PRESENT VALUES CUMUL. ($MILL)	PRESENT VALUES YEARLY ($MILL)
01	1993												
02	1994												
03	1995						1.17			1.17	-1.17	-0.83	-0.83
04	1996						3.51			3.51	-3.51	-3.06	-2.23
05	1997	37	320	1.34	2.97	4.31		1.21	0.07	1.28	3.03	-1.34	1.72
06	1998	37	320	1.34	2.97	4.31		1.21	0.08	1.29	3.02	0.18	1.53
07	1999	37	320	1.34	2.97	4.31		1.21	0.10	1.31	3.00	1.54	1.36
08	2000	37	320	1.34	2.97	4.31		1.21	0.07	1.28	3.03	2.76	1.22
09	2001	37	320	1.34	2.97	4.31		1.21	0.08	1.29	3.02	3.85	1.09
10	2002	37	320	1.34	2.97	4.31		1.21	0.17	1.38	2.93	4.80	0.94
11	2003	37	320	1.34	2.97	4.31		1.21	0.07	1.28	3.03	5.67	0.87
12	2004	37	320	1.34	2.97	4.31		1.21	0.08	1.29	3.02	6.44	0.77
13	2005	37	320	1.34	2.97	4.31		1.21	0.10	1.31	3.00	7.13	0.69
14	2006	37	320	1.34	2.97	4.31		1.21	0.07	1.28	3.03	7.75	0.62
15	2007	37	320	1.34	2.97	4.31		1.21	0.08	1.29	3.02	8.30	0.55
16	2008	37	320	1.34	2.97	4.31		1.21	0.23	1.44	2.87	8.77	0.47
17	2009	37	320	1.34	2.97	4.31		1.21	0.07	1.28	3.03	9.21	0.44
18	2010	37	320	1.34	2.97	4.31		1.21	0.08	1.29	3.02	9.60	0.39
19	2011	37	320	1.34	2.97	4.31		1.21	0.10	1.31	3.00	9.95	0.35
20	2012	37	320	1.34	2.97	4.31		1.21	0.07	1.28	3.03	10.26	0.31
21	2013	37	320	1.34	2.97	4.31		1.21	0.08	1.29	3.02	10.54	0.28
22	2014	37	320	1.34	2.97	4.31		1.21	0.42	1.63	2.68	10.77	0.22
23	2015	37	320	1.34	2.97	4.31		1.21	0.07	1.28	3.03	10.99	0.22
24	2016	37	320	1.34	2.97	4.31		1.21	0.08	1.29	3.02	11.19	0.20

IRR = 0.56477 PV= 0

ASSUMPTIONS:
1.THE PRODUCTION IS ADDITIONAL PRODUCTION RESULTING FROM THE INVESTMENT.
2.ELECTRICITY PRICE $35.90/MWeH.
3.HEAT PRICE $9.29/Gcal.
4.INVESTMENTS ARE IN CONSTANT 1993 PRICES AND INCLUDE CONTINGENCIES,INTEREST DURING CONSTRUCTION.
5.THE FUEL ESTIMATE IS FOR ADDITIONAL FUEL CONSUMPTION.
6.FUTURE ESCALATION,INTEREST ON LOANS,CLIENT OR OWNER COSTS ARE NOT INCLUDED IN THIS ANALYSIS.
7.EXCHANGE RATE US$1 = 780LEI.
8.FOR OPTION IB-INTERNATIONAL SUPPLY.

TABLE VII-7

JOB# 1060 ROMANIA PROJECT — K & M ENGINEERING & CONSULTING CORPORATION

REHABILITATED POWER PLANTS — RATE OF RETURN ESTIMATE — PRICED: MAHYLIS

GRIRO — DATE: 30-Aug-93

ITEM#	DESCRIPTION	PRODUCTION ELECTRIC (GWH)	PRODUCTION HEAT (Tcal)	BENEFITS-SALES ELECTRIC ($MILL)	BENEFITS-SALES HEAT ($MILL)	BENEFITS-SALES TOTAL ($MILL)	COSTS INVEST. ($MILL)	COSTS FUEL ($MILL)	COSTS O&M ($MILL)	COSTS TOTAL ($MILL)	NET BENEFITS ($MILL)	PRESENT VALUES CUMUL. ($MILL)	PRESENT VALUES YEARLY ($MILL)
01	1993												
02	1994												
03	1995						1.39			1.39	-1.39	-0.99	-0.99
04	1996						4.16			4.16	-4.16	-3.63	-2.64
05	1997	122	320	4.38	2.97	7.35		3.90	0.09	3.99	3.36	-1.72	1.91
06	1998	122	320	4.38	2.97	7.35		3.90	0.09	3.99	3.36	-0.01	1.70
07	1999	122	320	4.38	2.97	7.35		3.90	0.22	4.12	3.23	1.45	1.46
08	2000	122	320	4.38	2.97	7.35		3.90	0.09	3.99	3.36	2.81	1.36
09	2001	122	320	4.38	2.97	7.35		3.90	0.09	3.99	3.36	4.02	1.21
10	2002	122	320	4.38	2.97	7.35		3.90	0.35	4.25	3.10	5.02	1.00
11	2003	122	320	4.38	2.97	7.35		3.90	0.09	3.99	3.36	5.99	0.97
12	2004	122	320	4.38	2.97	7.35		3.90	0.09	3.99	3.36	6.85	0.86
13	2005	122	320	4.38	2.97	7.35		3.90	0.22	4.12	3.23	7.59	0.74
14	2006	122	320	4.38	2.97	7.35		3.90	0.09	3.99	3.36	8.28	0.69
15	2007	122	320	4.38	2.97	7.35		3.90	0.09	3.99	3.36	8.89	0.61
16	2008	122	320	4.38	2.97	7.35		3.90	0.48	4.38	2.97	9.38	0.49
17	2009	122	320	4.38	2.97	7.35		3.90	0.09	3.99	3.36	9.87	0.49
18	2010	122	320	4.38	2.97	7.35		3.90	0.09	3.99	3.36	10.31	0.44
19	2011	122	320	4.38	2.97	7.35		3.90	0.22	4.12	3.23	10.68	0.38
20	2012	122	320	4.38	2.97	7.35		3.90	0.09	3.99	3.36	11.03	0.35
21	2013	122	320	4.38	2.97	7.35		3.90	0.09	3.99	3.36	11.34	0.31
22	2014	122	320	4.38	2.97	7.35		3.90	0.86	4.76	2.59	11.56	0.21
23	2015	122	320	4.38	2.97	7.35		3.90	0.09	3.99	3.36	11.80	0.25
24	2016	122	320	4.38	2.97	7.35		3.90	0.09	3.99	3.36	12.03	0.22

IRR = 0.53064 PV= 0

ASSUMPTIONS:
1.THE PRODUCTION IS ADDITIONAL PRODUCTION RESULTING FROM THE INVESTMENT.
2.ELECTRICITY PRICE $35.90/MWeH.
3.HEAT PRICE $9.29/Gcal.
4.INVESTMENTS ARE IN CONSTANT 1993 PRICES AND INCLUDE CONTINGENCIES,INTEREST DURING CONSTRUCTION.
5.THE FUEL ESTIMATE IS FOR ADDITIONAL FUEL CONSUMPTION.
6,FUTURE ESCALATION,INTEREST ON LOANS,CLIENT OR OWNER COSTS ARE NOT INCLUDED IN THIS ANALYSIS.
7.EXCHANGE RATE US$1 = 780LEI.
8.FOR OPTION II-ROMANIAN SUPPLY.

TABLE VII-7

JOB# 1060 ROMANIA PROJECT — K & M ENGINEERING & CONSULTING CORPORATION

REHABILITATED POWER PLANTS — RATE OF RETURN ESTIMATE — PRICED: MAHYLIS

GRIRO — DATE: 30-Aug-93

ITEM#	DESCRIPTION	PRODUCTION ELECTRIC (GWH)	PRODUCTION HEAT (Tcal)	BENEFITS-SALES ELECTRIC ($MILL)	BENEFITS-SALES HEAT ($MILL)	BENEFITS-SALES TOTAL ($MILL)	COSTS INVEST. ($MILL)	COSTS FUEL ($MILL)	COSTS O&M ($MILL)	COSTS TOTAL ($MILL)	NET BENEFITS ($MILL)	PRESENT VALUES CUMUL. ($MILL)	PRESENT VALUES YEARLY ($MILL)
01	1993												
02	1994												
03	1995						3.17			3.17	-3.17	-2.26	-2.26
04	1996						9.51			9.51	-9.51	-8.30	-6.04
05	1997	122	320	4.38	2.97	7.35		3.90	0.09	3.99	3.36	-6.39	1.91
06	1998	122	320	4.38	2.97	7.35		3.90	0.09	3.99	3.36	-4.69	1.70
07	1999	122	320	4.38	2.97	7.35		3.90	0.22	4.12	3.23	-3.22	1.46
08	2000	122	320	4.38	2.97	7.35		3.90	0.09	3.99	3.36	-1.87	1.36
09	2001	122	320	4.38	2.97	7.35		3.90	0.09	3.99	3.36	-0.65	1.21
10	2002	122	320	4.38	2.97	7.35		3.90	0.35	4.25	3.10	0.35	1.00
11	2003	122	320	4.38	2.97	7.35		3.90	0.09	3.99	3.36	1.31	0.97
12	2004	122	320	4.38	2.97	7.35		3.90	0.09	3.99	3.36	2.18	0.86
13	2005	122	320	4.38	2.97	7.35		3.90	0.22	4.12	3.23	2.92	0.74
14	2006	122	320	4.38	2.97	7.35		3.90	0.09	3.99	3.36	3.61	0.69
15	2007	122	320	4.38	2.97	7.35		3.90	0.09	3.99	3.36	4.22	0.61
16	2008	122	320	4.38	2.97	7.35		3.90	0.48	4.38	2.97	4.70	0.49
17	2009	122	320	4.38	2.97	7.35		3.90	0.09	3.99	3.36	5.19	0.49
18	2010	122	320	4.38	2.97	7.35		3.90	0.09	3.99	3.36	5.63	0.44
19	2011	122	320	4.38	2.97	7.35		3.90	0.22	4.12	3.23	6.01	0.38
20	2012	122	320	4.38	2.97	7.35		3.90	0.09	3.99	3.36	6.36	0.35
21	2013	122	320	4.38	2.97	7.35		3.90	0.09	3.99	3.36	6.67	0.31
22	2014	122	320	4.38	2.97	7.35		3.90	0.86	4.76	2.59	6.88	0.21
23	2015	122	320	4.38	2.97	7.35		3.90	0.09	3.99	3.36	7.13	0.25
24	2016	122	320	4.38	2.97	7.35		3.90	0.09	3.99	3.36	7.35	0.22

IRR = 0.24312 PV= 0

ASSUMPTIONS:
1.THE PRODUCTION IS ADDITIONAL PRODUCTION RESULTING FROM THE INVESTMENT.
2.ELECTRICITY PRICE $35.90/MWeH.
3.HEAT PRICE $9.29/Gcal.
4.INVESTMENTS ARE IN CONSTANT 1993 PRICES AND INCLUDE CONTINGENCIES,INTEREST DURING CONSTRUCTION.
5.THE FUEL ESTIMATE IS FOR ADDITIONAL FUEL CONSUMPTION.
6.FUTURE ESCALATION,INTEREST ON LOANS,CLIENT OR OWNER COSTS ARE NOT INCLUDED IN THIS ANALYSIS.
7.EXCHANGE RATE US$1 = 780LEI.
8.FOR OPTION II-INTERNATIONAL SUPPLY.

TABLE VII-7

JOB# 1060 ROMANIA PROJECT — K & M ENGINEERING & CONSULTING CORPORATION

REHABILITATED POWER PLANTS — RATE OF RETURN ESTIMATE — PRICED: MAHYLIS

GRIRO — DATE: 30-Aug-93

ITEM#	DESCRIPTION	PRODUCTION ELECTRIC (GWH)	PRODUCTION HEAT (Tcal)	BENEFITS-SALES ELECTRIC ($MILL)	BENEFITS-SALES HEAT ($MILL)	BENEFITS-SALES TOTAL ($MILL)	COSTS INVEST. ($MILL)	COSTS FUEL ($MILL)	COSTS O&M ($MILL)	COSTS TOTAL ($MILL)	NET BENEFITS ($MILL)	PRESENT VALUES CUMUL. ($MILL)	PRESENT VALUES YEARLY ($MILL)
01	1993												
02	1994												
03	1995						5.67			5.67	-5.67	-5.06	-5.06
04	1996						9.45			9.45	-9.45	-12.60	-7.53
05	1997						22.68			22.68	-22.68	-28.74	-16.14
06	1998	492	320	17.68	2.97	20.65		8.26	1.23	9.49	11.16	-21.65	7.09
07	1999	492	320	17.68	2.97	20.65		8.26	1.23	9.49	11.16	-15.31	6.33
08	2000	492	320	17.68	2.97	20.65		8.26	1.23	9.49	11.16	-9.66	5.65
09	2001	492	320	17.68	2.97	20.65		8.26	1.23	9.49	11.16	-4.61	5.05
10	2002	492	320	17.68	2.97	20.65		8.26	1.90	10.16	10.49	-0.38	4.24
11	2003	492	320	17.68	2.97	20.65		8.26	1.23	9.49	11.16	3.65	4.02
12	2004	492	320	17.68	2.97	20.65		8.26	1.23	9.49	11.16	7.24	3.59
13	2005	492	320	17.68	2.97	20.65		8.26	1.23	9.49	11.16	10.45	3.21
14	2006	492	320	17.68	2.97	20.65		8.26	1.23	9.49	11.16	13.31	2.86
15	2007	492	320	17.68	2.97	20.65		8.26	1.23	9.49	11.16	15.87	2.56
16	2008	492	320	17.68	2.97	20.65		8.26	2.54	10.80	9.85	17.89	2.02
17	2009	492	320	17.68	2.97	20.65		8.26	1.23	9.49	11.16	19.92	2.04
18	2010	492	320	17.68	2.97	20.65		8.26	1.23	9.49	11.16	21.74	1.82
19	2011	492	320	17.68	2.97	20.65		8.26	1.23	9.49	11.16	23.37	1.63
20	2012	492	320	17.68	2.97	20.65		8.26	1.23	9.49	11.16	24.82	1.45
21	2013	492	320	17.68	2.97	20.65		8.26	1.23	9.49	11.16	26.12	1.30
22	2014	492	320	17.68	2.97	20.65		8.26	1.23	9.49	11.16	27.27	1.16
23	2015	492	320	17.68	2.97	20.65		8.26	4.46	12.72	7.93	28.01	0.73
24	2016	492	320	17.68	2.97	20.65		8.26	1.23	9.49	11.16	28.93	0.92
25	2017	492	320	17.68	2.97	20.65		8.26	1.23	9.49	11.16	29.75	0.82

IRR = 0.25203 PV= 0

ASSUMPTIONS:
1.THE PRODUCTION IS ADDITIONAL PRODUCTION RESULTING FROM THE INVESTMENT.
2.ELECTRICITY PRICE $35.90/MWeH.
3.HEAT PRICE $9.29/Gcal.
4.INVESTMENTS ARE IN CONSTANT 1993 PRICES AND INCLUDE CONTINGENCIES,INTEREST DURING CONSTRUCTION.
5.THE FUEL ESTIMATE IS FOR ADDITIONAL FUEL CONSUMPTION.
6.FUTURE ESCALATION,INTEREST ON LOANS,CLIENT OR OWNER COSTS ARE NOT INCLUDED IN THIS ANALYSIS.
7.EXCHANGE RATE US$1 = 780LEI.
8.FOR OPTION IIIA-ROMANIAN SUPPLY.

TABLE VII-7

JOB# 1060 ROMANIA PROJECT — K & M ENGINEERING & CONSULTING CORPORATION

REHABILITATED POWER PLANTS — RATE OF RETURN ESTIMATE — PRICED: MAHYLIS

GRIRO — DATE: 30-Aug-93

ITEM#	DESCRIPTION	PRODUCTION ELECTRIC (GWH)	PRODUCTION HEAT (Tcal)	BENEFITS-SALES ELECTRIC ($MILL)	BENEFITS-SALES HEAT ($MILL)	BENEFITS-SALES TOTAL ($MILL)	COSTS INVEST. ($MILL)	COSTS FUEL ($MILL)	COSTS O&M ($MILL)	COSTS TOTAL ($MILL)	NET BENEFITS ($MILL)	PRESENT VALUES CUMUL. ($MILL)	PRESENT VALUES YEARLY ($MILL)
01	1993												
02	1994												
03	1995						6.29			6.29	-6.29	-5.61	-5.61
04	1996						10.48			10.48	-10.48	-13.96	-8.35
05	1997						25.14			25.14	-25.14	-31.86	-17.89
06	1998	492	320	17.68	2.97	20.65		8.26	1.23	9.49	11.16	-24.76	7.09
07	1999	492	320	17.68	2.97	20.65		8.26	1.23	9.49	11.16	-18.43	6.33
08	2000	492	320	17.68	2.97	20.65		8.26	1.23	9.49	11.16	-12.78	5.65
09	2001	492	320	17.68	2.97	20.65		8.26	1.23	9.49	11.16	-7.73	5.05
10	2002	492	320	17.68	2.97	20.65		8.26	1.90	10.16	10.49	-3.49	4.24
11	2003	492	320	17.68	2.97	20.65		8.26	1.23	9.49	11.16	0.53	4.02
12	2004	492	320	17.68	2.97	20.65		8.26	1.23	9.49	11.16	4.12	3.59
13	2005	492	320	17.68	2.97	20.65		8.26	1.23	9.49	11.16	7.33	3.21
14	2006	492	320	17.68	2.97	20.65		8.26	1.23	9.49	11.16	10.20	2.86
15	2007	492	320	17.68	2.97	20.65		8.26	1.23	9.49	11.16	12.75	2.56
16	2008	492	320	17.68	2.97	20.65		8.26	2.54	10.80	9.85	14.77	2.02
17	2009	492	320	17.68	2.97	20.65		8.26	1.23	9.49	11.16	16.81	2.04
18	2010	492	320	17.68	2.97	20.65		8.26	1.23	9.49	11.16	18.63	1.82
19	2011	492	320	17.68	2.97	20.65		8.26	1.23	9.49	11.16	20.25	1.63
20	2012	492	320	17.68	2.97	20.65		8.26	1.23	9.49	11.16	21.70	1.45
21	2013	492	320	17.68	2.97	20.65		8.26	1.23	9.49	11.16	23.00	1.30
22	2014	492	320	17.68	2.97	20.65		8.26	1.23	9.49	11.16	24.16	1.16
23	2015	492	320	17.68	2.97	20.65		8.26	4.46	12.72	7.93	24.89	0.73
24	2016	492	320	17.68	2.97	20.65		8.26	1.23	9.49	11.16	25.81	0.92
25	2017	492	320	17.68	2.97	20.65		8.26	1.23	9.49	11.16	26.64	0.82

IRR = 0.22892 PV= 0

ASSUMPTIONS:
1.THE PRODUCTION IS ADDITIONAL PRODUCTION RESULTING FROM THE INVESTMENT.
2.ELECTRICITY PRICE $35.90/MWeH.
3.HEAT PRICE $9.29/Gcal.
4.INVESTMENTS ARE IN CONSTANT 1993 PRICES AND INCLUDE CONTINGENCIES,INTEREST DURING CONSTRUCTION.
5.THE FUEL ESTIMATE IS FOR ADDITIONAL FUEL CONSUMPTION.
6.FUTURE ESCALATION,INTEREST ON LOANS,CLIENT OR OWNER COSTS ARE NOT INCLUDED IN THIS ANALYSIS.
7.EXCHANGE RATE US$1 = 780LEI.
8.FOR OPTION IIIA-INTERNATIONAL SUPPLY.

TABLE VII-7

JOB# 1060 ROMANIA PROJECT K & M ENGINEERING & CONSULTING CORPORATION

REHABILITATED POWER PLANTS RATE OF RETURN ESTIMATE PRICED: MAHYLIS
GRIRO DATE: 30-Aug-93

ITEM#	DESCRIPTION	PRODUCTION ELECTRIC (GWH)	PRODUCTION HEAT (Tcal)	BENEFITS-SALES ELECTRIC ($MILL)	BENEFITS-SALES HEAT ($MILL)	BENEFITS-SALES TOTAL ($MILL)	COSTS INVEST. ($MILL)	COSTS FUEL ($MILL)	COSTS O&M ($MILL)	COSTS TOTAL ($MILL)	NET BENEFITS ($MILL)	PRESENT VALUES CUMUL. ($MILL)	PRESENT VALUES YEARLY ($MILL)
01	1993												
02	1994												
03	1995						6.35			6.35	-6.35	-5.67	-5.67
04	1996						10.59			10.59	-10.59	-14.12	-8.44
05	1997						25.42			25.42	-25.42	-32.21	-18.09
06	1998	395	320	14.19	2.97	17.17		7.33	1.42	8.75	8.42	-26.86	5.35
07	1999	395	320	14.19	2.97	17.17		7.33	1.42	8.75	8.42	-22.08	4.78
08	2000	395	320	14.19	2.97	17.17		7.33	1.42	8.75	8.42	-17.82	4.26
09	2001	395	320	14.19	2.97	17.17		7.33	1.42	8.75	8.42	-14.01	3.81
10	2002	395	320	14.19	2.97	17.17		7.33	1.42	8.75	8.42	-10.61	3.40
11	2003	395	320	14.19	2.97	17.17		7.33	1.99	9.32	7.85	-7.78	2.83
12	2004	395	320	14.19	2.97	17.17		7.33	1.42	8.75	8.42	-5.07	2.71
13	2005	395	320	14.19	2.97	17.17		7.33	1.42	8.75	8.42	-2.65	2.42
14	2006	395	320	14.19	2.97	17.17		7.33	1.42	8.75	8.42	-0.49	2.16
15	2007	395	320	14.19	2.97	17.17		7.33	1.42	8.75	8.42	1.44	1.93
16	2008	395	320	14.19	2.97	17.17		7.33	1.42	8.75	8.42	3.16	1.72
17	2009	395	320	14.19	2.97	17.17		7.33	2.63	9.96	7.21	4.48	1.32
18	2010	395	320	14.19	2.97	17.17		7.33	1.42	8.75	8.42	5.85	1.37
19	2011	395	320	14.19	2.97	17.17		7.33	1.42	8.75	8.42	7.08	1.23
20	2012	395	320	14.19	2.97	17.17		7.33	1.42	8.75	8.42	8.17	1.09
21	2013	395	320	14.19	2.97	17.17		7.33	1.42	8.75	8.42	9.15	0.98
22	2014	395	320	14.19	2.97	17.17		7.33	1.42	8.75	8.42	10.02	0.87
23	2015	395	320	14.19	2.97	17.17		7.33	4.56	11.89	5.28	10.51	0.49
24	2016	395	320	14.19	2.97	17.17		7.33	1.42	8.75	8.42	11.21	0.70
25	2017	395	320	14.19	2.97	17.17		7.33	1.42	8.75	8.42	11.83	0.62

IRR = 0.17105 PV= 0

ASSUMPTIONS:
1.THE PRODUCTION IS ADDITIONAL PRODUCTION RESULTING FROM THE INVESTMENT.
2.ELECTRICITY PRICE $35.90/MWeH.
3.HEAT PRICE $9.29/Gcal.
4.INVESTMENTS ARE IN CONSTANT 1993 PRICES AND INCLUDE CONTINGENCIES,INTEREST DURING CONSTRUCTION.
5.THE FUEL ESTIMATE IS FOR ADDITIONAL FUEL CONSUMPTION.
6.FUTURE ESCALATION,INTEREST ON LOANS,CLIENT OR OWNER COSTS ARE NOT INCLUDED IN THIS ANALYSIS.
7.EXCHANGE RATE US$1 = 780LEI.
8.FOR OPTION IIIB-ROMANIAN SUPPLY.

TABLE VII-7

JOB# 1060 ROMANIA PROJECT K & M ENGINEERING & CONSULTING CORPORATION

REHABILITATED POWER PLANTS RATE OF RETURN ESTIMATE PRICED: MAHYLIS
GRIRO DATE: 30-Aug-93

ITEM#	DESCRIPTION	PRODUCTION ELECTRIC (GWH)	PRODUCTION HEAT (Tcal)	BENEFITS-SALES ELECTRIC ($MILL)	BENEFITS-SALES HEAT ($MILL)	BENEFITS-SALES TOTAL ($MILL)	COSTS INVEST. ($MILL)	COSTS FUEL ($MILL)	COSTS O&M ($MILL)	COSTS TOTAL ($MILL)	NET BENEFITS ($MILL)	PRESENT VALUES CUMUL. ($MILL)	PRESENT VALUES YEARLY ($MILL)
01	1993												
02	1994												
03	1995						6.70			6.70	-6.70	-5.98	-5.98
04	1996						11.62			11.62	-11.62	-15.24	-9.26
05	1997						27.88			27.88	-27.88	-35.08	-19.84
06	1998	395	320	14.19	2.97	17.17		7.33	1.42	8.75	8.42	-29.73	5.35
07	1999	395	320	14.19	2.97	17.17		7.33	1.42	8.75	8.42	-24.95	4.78
08	2000	395	320	14.19	2.97	17.17		7.33	1.42	8.75	8.42	-20.69	4.26
09	2001	395	320	14.19	2.97	17.17		7.33	1.42	8.75	8.42	-16.88	3.81
10	2002	395	320	14.19	2.97	17.17		7.33	1.42	8.75	8.42	-13.48	3.40
11	2003	395	320	14.19	2.97	17.17		7.33	1.99	9.32	7.85	-10.65	2.83
12	2004	395	320	14.19	2.97	17.17		7.33	1.42	8.75	8.42	-7.94	2.71
13	2005	395	320	14.19	2.97	17.17		7.33	1.42	8.75	8.42	-5.52	2.42
14	2006	395	320	14.19	2.97	17.17		7.33	1.42	8.75	8.42	-3.36	2.16
15	2007	395	320	14.19	2.97	17.17		7.33	1.42	8.75	8.42	-1.43	1.93
16	2008	395	320	14.19	2.97	17.17		7.33	1.42	8.75	8.42	0.29	1.72
17	2009	395	320	14.19	2.97	17.17		7.33	2.63	9.96	7.21	1.61	1.32
18	2010	395	320	14.19	2.97	17.17		7.33	1.42	8.75	8.42	2.98	1.37
19	2011	395	320	14.19	2.97	17.17		7.33	1.42	8.75	8.42	4.21	1.23
20	2012	395	320	14.19	2.97	17.17		7.33	1.42	8.75	8.42	5.30	1.09
21	2013	395	320	14.19	2.97	17.17		7.33	1.42	8.75	8.42	6.28	0.98
22	2014	395	320	14.19	2.97	17.17		7.33	1.42	8.75	8.42	7.15	0.87
23	2015	395	320	14.19	2.97	17.17		7.33	4.56	11.89	5.28	7.64	0.49
24	2016	395	320	14.19	2.97	17.17		7.33	1.42	8.75	8.42	8.33	0.70
25	2017	395	320	14.19	2.97	17.17		7.33	1.42	8.75	8.42	8.95	0.62

IRR = 0.15618 PV= 0

ASSUMPTIONS:
1.THE PRODUCTION IS ADDITIONAL PRODUCTION RESULTING FROM THE INVESTMENT.
2.ELECTRICITY PRICE $35.90/MWeH.
3.HEAT PRICE $9.29/Gcal.
4.INVESTMENTS ARE IN CONSTANT 1993 PRICES AND INCLUDE CONTINGENCIES,INTEREST DURING CONSTRUCTION.
5.THE FUEL ESTIMATE IS FOR ADDITIONAL FUEL CONSUMPTION.
6.FUTURE ESCALATION,INTEREST ON LOANS,CLIENT OR OWNER COSTS ARE NOT INCLUDED IN THIS ANALYSIS.
7.EXCHANGE RATE US$1 = 780LEI.
8.FOR OPTION IIIB-INTERNATIONAL SUPPLY.

OPTION

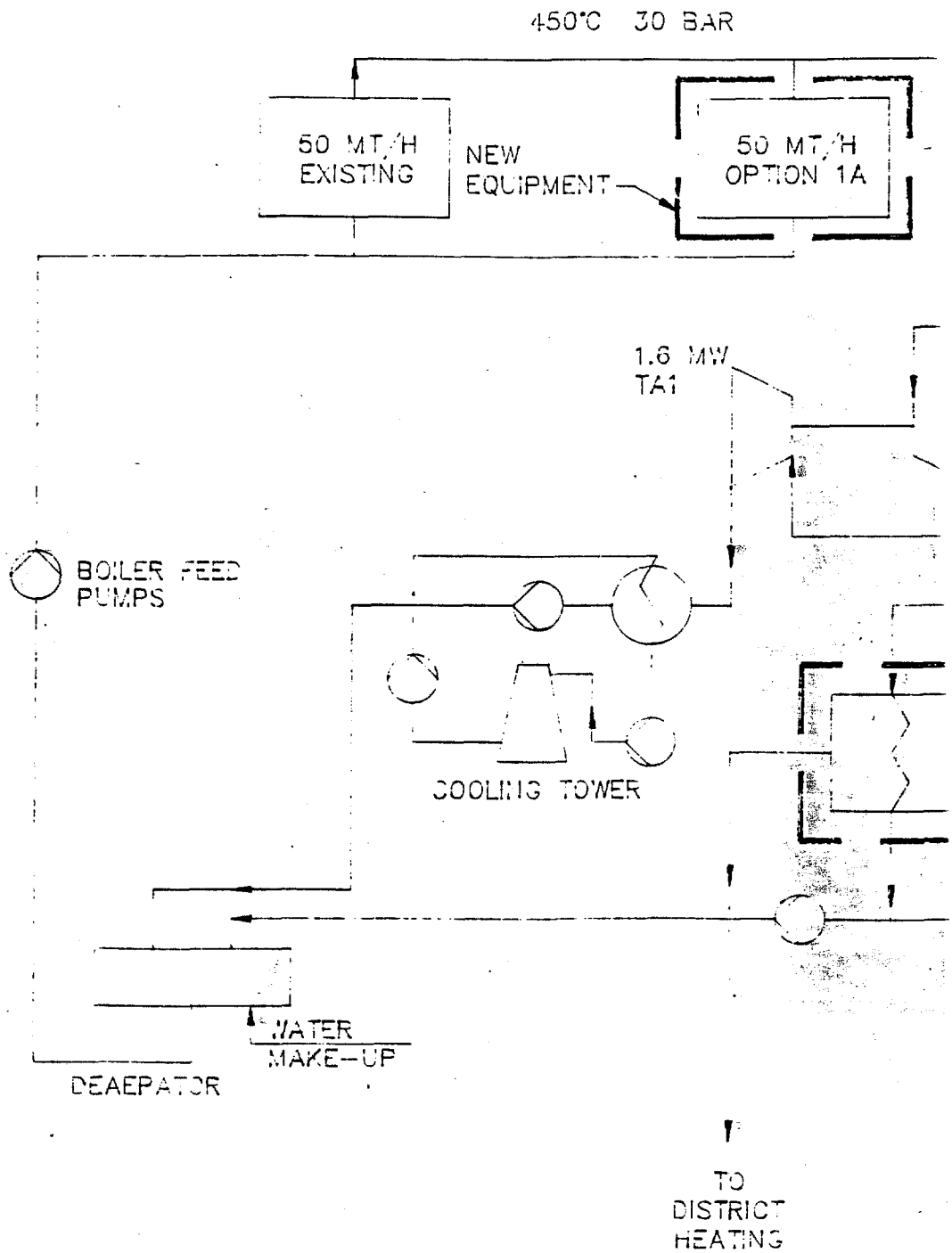
450°C 30 BAR
50 MT/H
EXISTING
NEW
EQUIPMENT
50 MT/H
OPTION 1A
1.6 MW
TA1
BOILER FEED
PUMPS
COOLING TOWER
WATER
MAKE-UP
DEAERATOR
TO
DISTRICT
HEATING

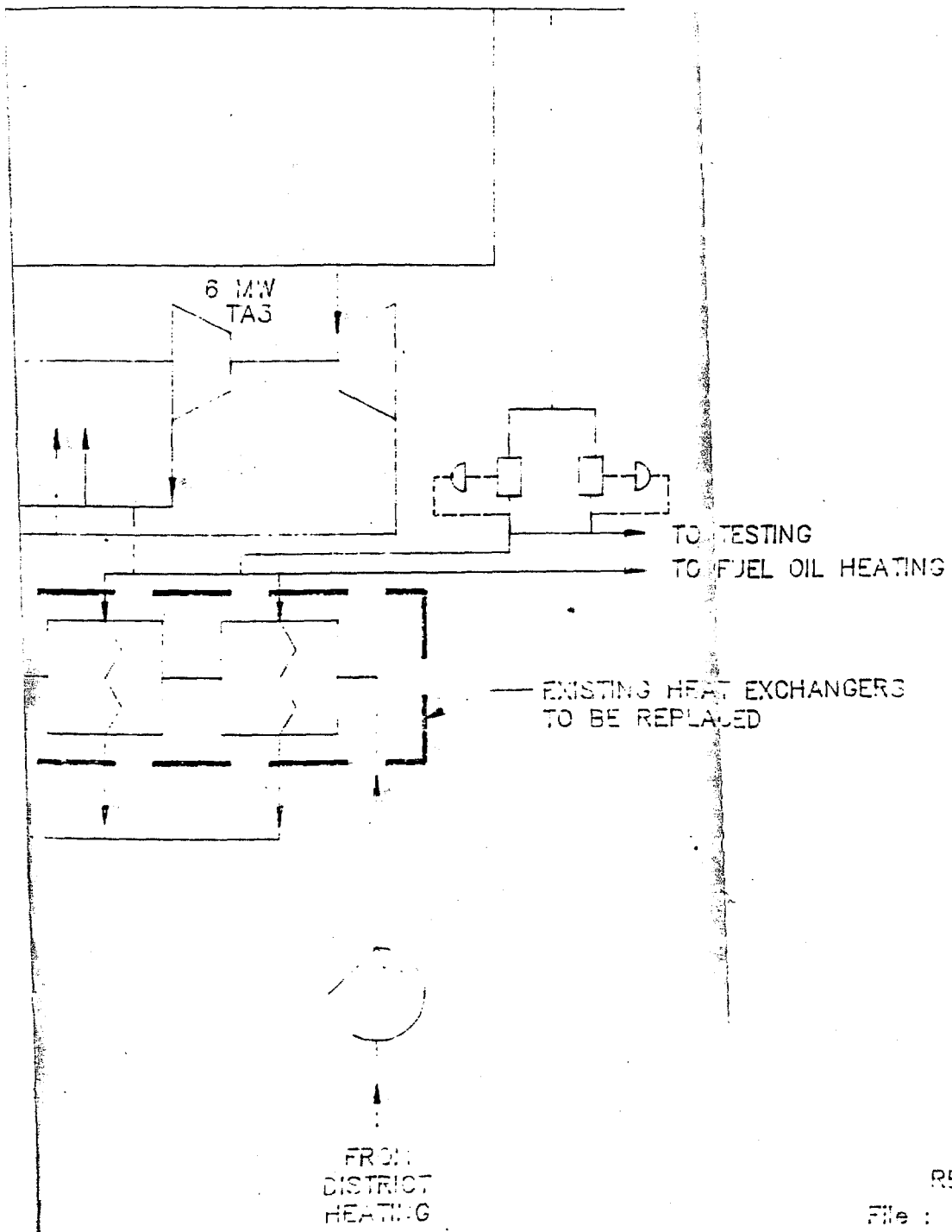

SKETCH 1-A

REVISION A — 9/13/93

File : ...\1060\1060_1A.DWG

OPTION

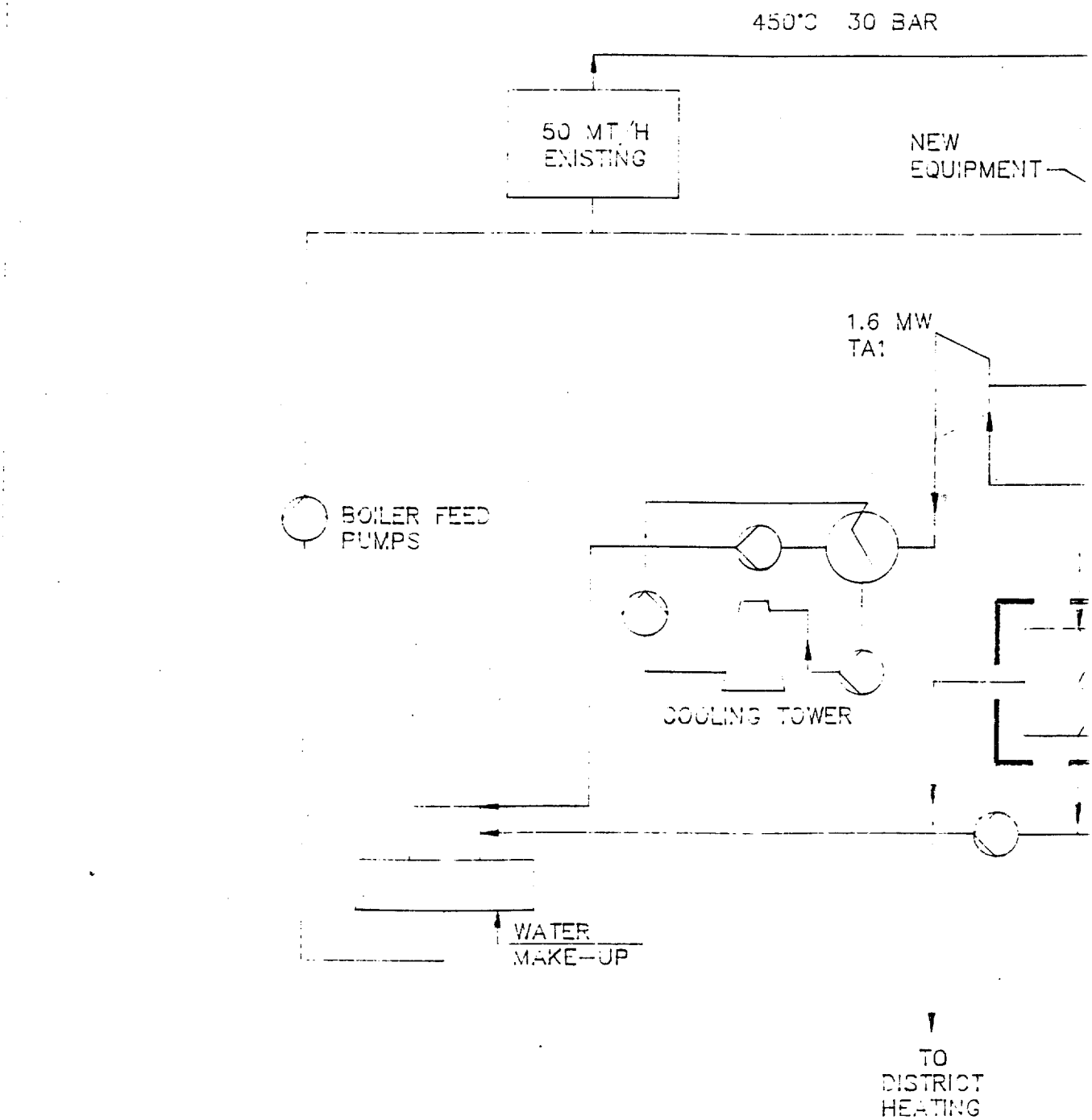
450°C 30 BAR
50 MT/H
EXISTING
NEW
EQUIPMENT
1.6 MW
TA1
BOILER FEED
PUMPS
COOLING TOWER
WATER
MAKE-UP
TO
DISTRICT
HEATING

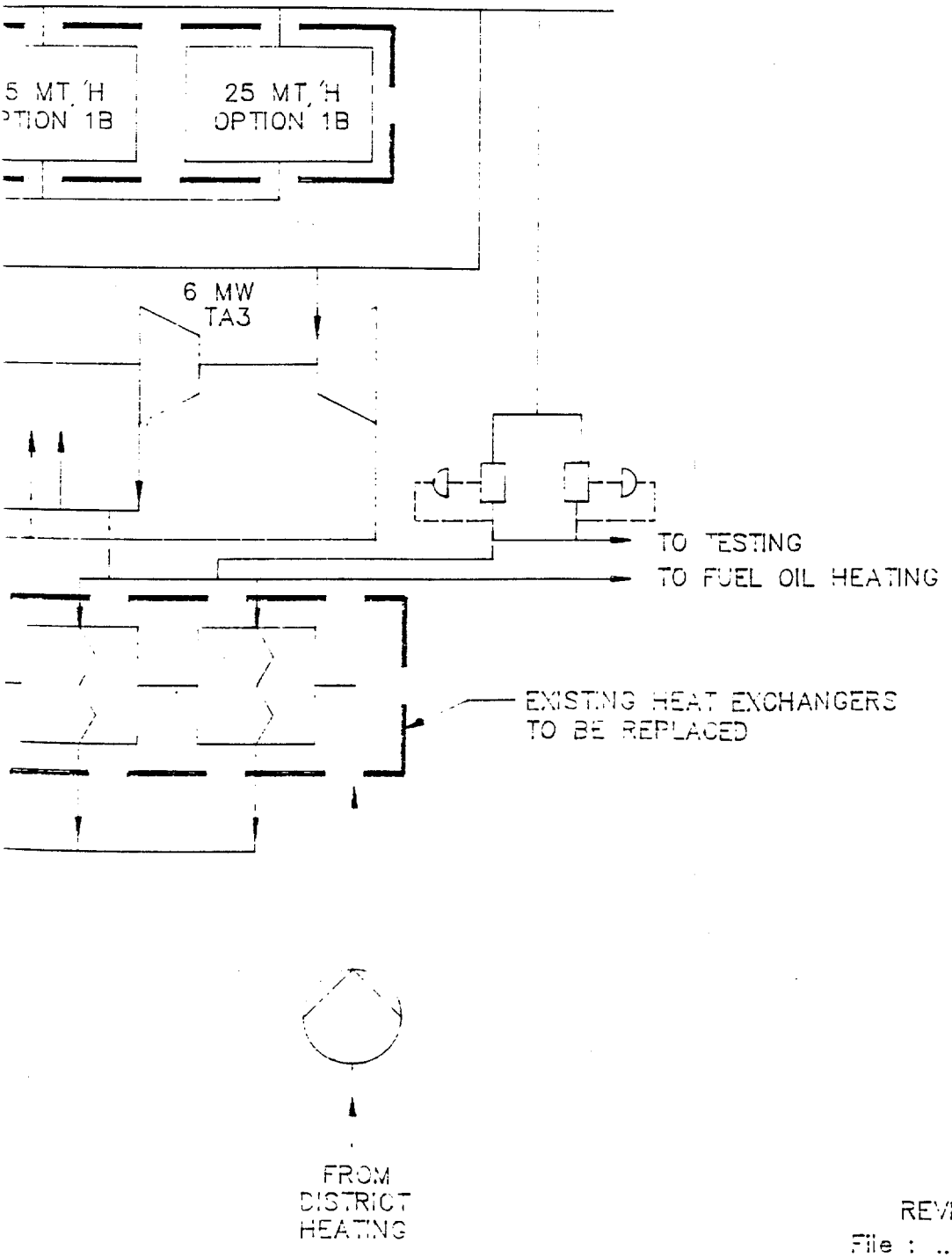

SKETCH 1-B

REVISION A – 8/C/93

File : ...\1060\1060_1B.DWG

129d

129E

OPTION Ii

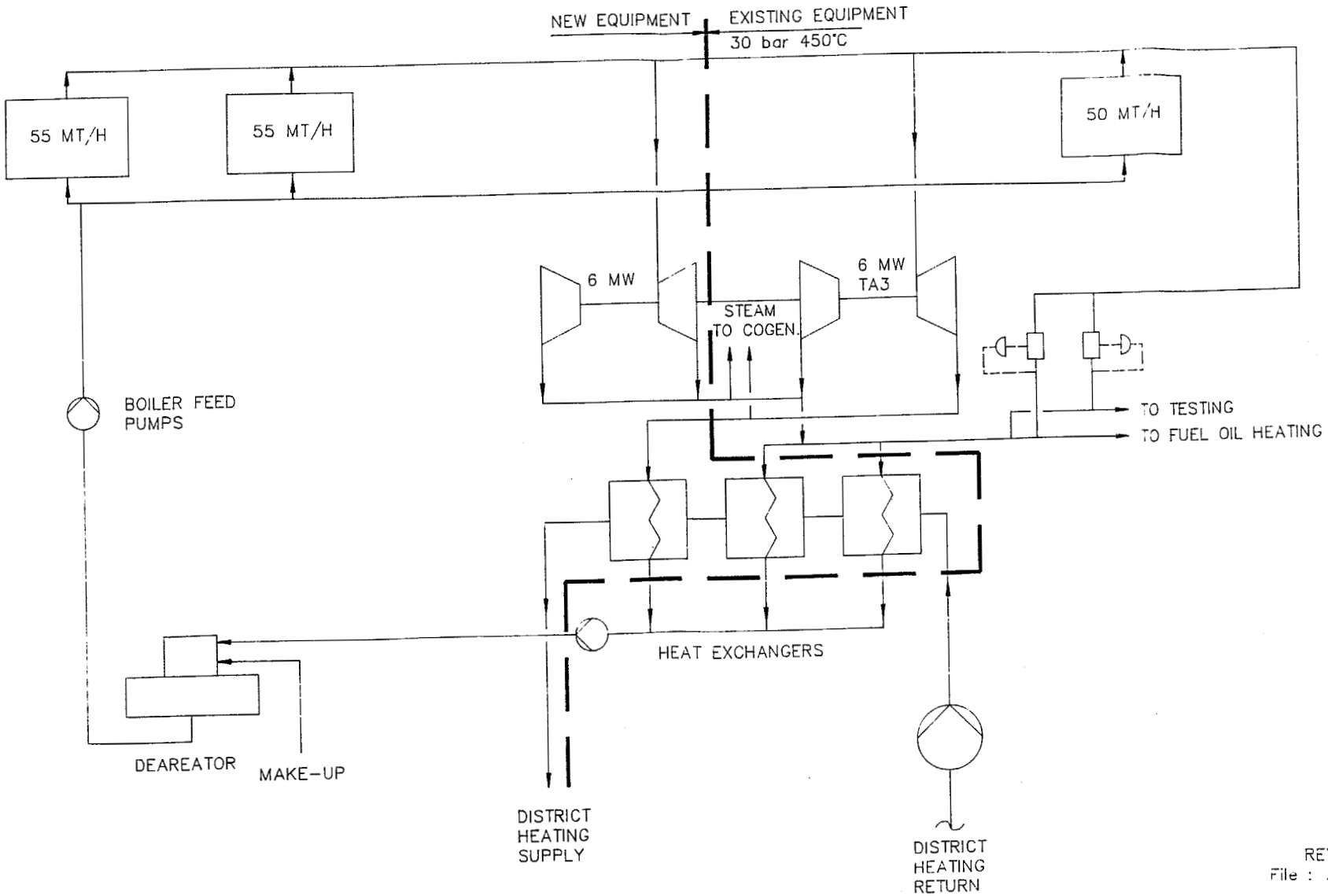

SKET

REVISION A – 9/

File : ...\1060\1060_2A

OPTION IIIA

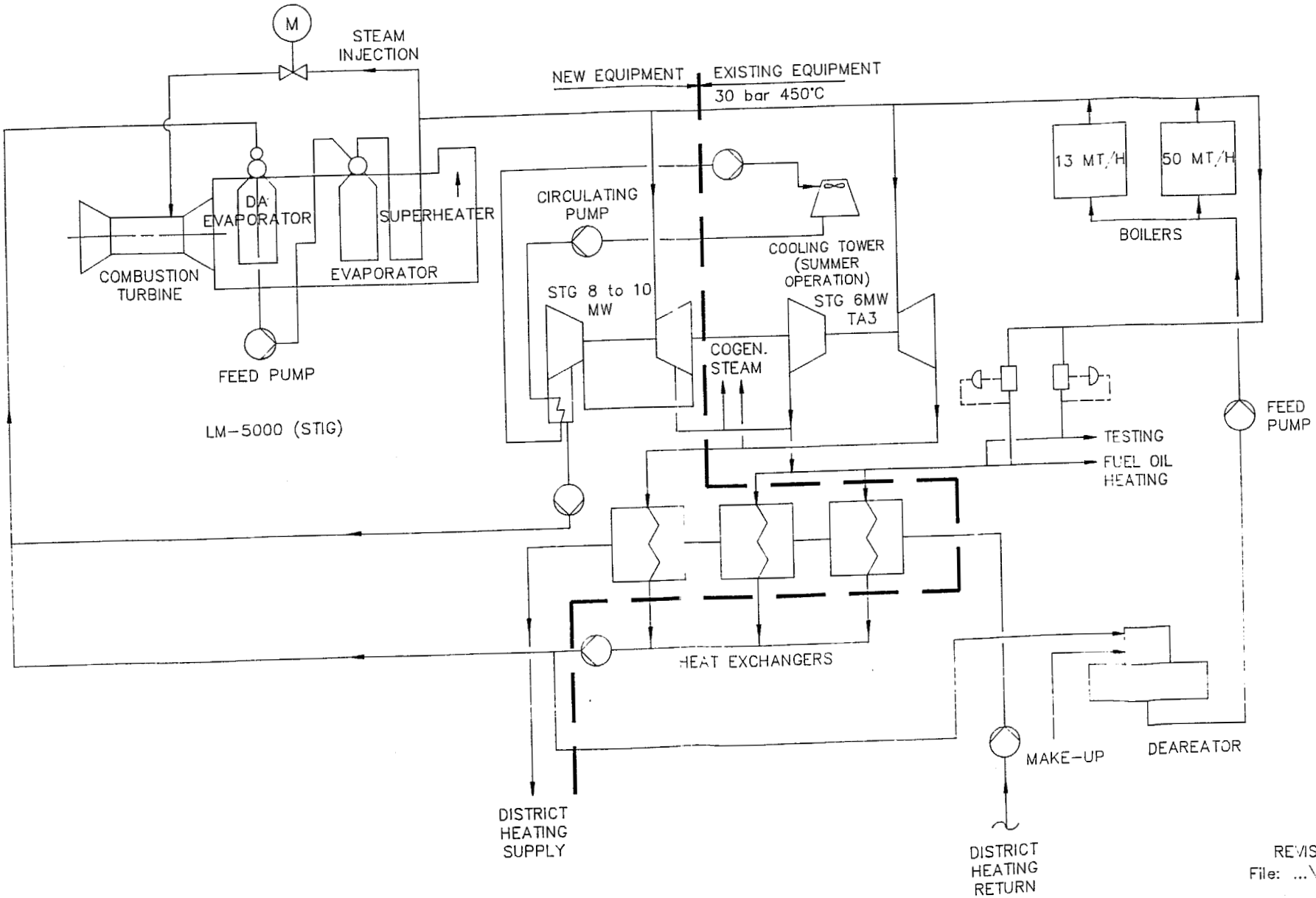

SKETCH

REVISION A – 9,
File: ...\1060\1060_3

OPTION IIIB

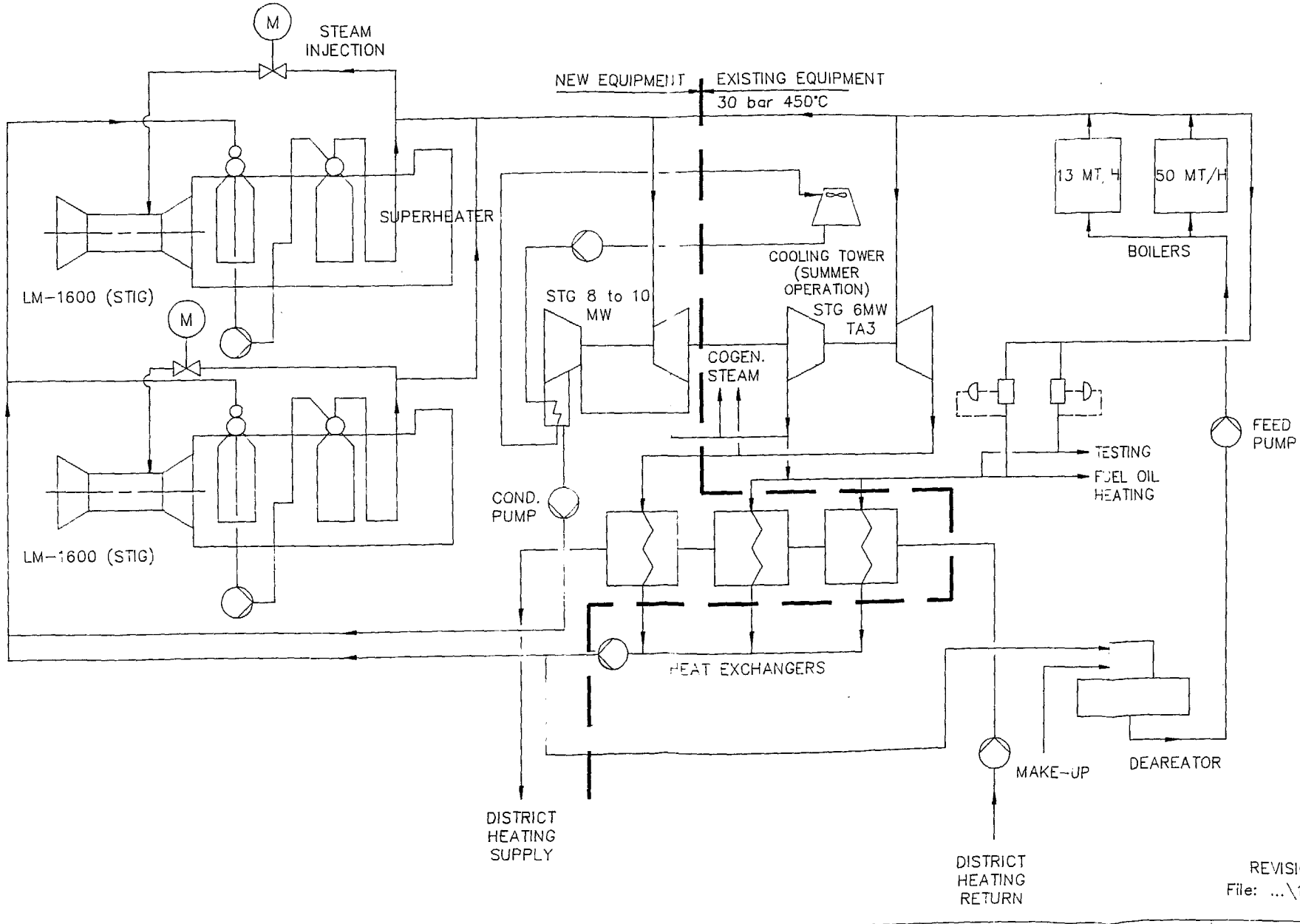

SKETCH

REVISION A – 9/3
File: ...\1060\1060_3B.

XI. LIST OF UNITED STATES MANUFACTURERS OF EQUIPMENT TO BE USED ON GRIRO REHABILITATION

1.0	**Combustion Turbines**	Telephone Number
	General Electric Company Albany, New York	800-626-2004
	Solar Turbines San Diego, California	619-544-5760
	Stewart & Stevenson Houston, Texas	713-868-7700
	Westinghouse Electric Co. Orlando, Florida	407-381-6864
2.0	**Heat Recovery Steam Generators**	
	Foster Wheeler Corp. Clinton, New Jersey	201-730-4000
	Deltak Corp. Minneapolis, Minnesota	612-557-7440
	Ametek Inc. Wilmington, Delaware	302-995-0400
	Entec Houston, Texas	713-961-9061
3.0	**Steam Turbines**	
	General Electric Co. Albany, New York	800-626-2004
	ABB Power Generation Inc. North Brunswick, New Jersey	201-932-6000
	Westinghouse Electric Co. Orlando, Florida	407-381-6864

4.0	**Condensers**	**Telephone No.**
	Foster Wheeler Corp. Clinton, New Jersey	201-730-4000
	Nash Engineering Norwalk, Connecticut	203-852-3724
	Nooter Corp. St. Louis, Missouri	314-621-6000
	Southwestern Engineering Co. Los Angeles, California	213-726-0641
5.0	**Pumps**	
	Ingersoll Rand. Co. Phillipsburg, New Jersey	201-859-7853
	IMO Industries Inc. Lawrenceville, New Jersey	609-890-5900
	Goulds Pumps Seneca Falls, New York	315-568-2811
	Dresser Industries Inc. Connersville, Indiana	317-827-9200
6.0	**Heat Exchangers**	
	Eastern Wheeler Corp. Clinton, New Jersey	201-730-4000
	Yuba Heat Transfer Corp. Audubon, Pennsylvania	215-666-9770

XII. ENVIRONMENTAL IMPACT OF ATMOSPHERIC RELEASE OF THE PROPOSED FACILITY

1.0 General

At this time there are no specific regulations in Romania to cover the environmental emissions of combustion turbines. The existing regulation issue in December 1979 does not address the Nitrogen Oxide (NOx) emissions to atmosphere. NOx is the most damaging environmental release from combustion turbines using gas or distillated oil.

In the absence of Romanian regulations limiting the NOx atmospheric releases, for the purpose of this study, we have adopted as guidelines the European Community Directives (EC) assuming that any future Romanian environmental regulation for this type of installation will establish similar limits as the EC directives.

2.0 European Community Directives

EC Directives concerning ambient air quality.

2.1 Council directive of July 15, 1980 on Air Quality Limits values of guide values for sulfur dioxide and suspended particles. (BO/779/EC OJEC 30.8.80), L229/30)

Annex I to this Directive fixes limit values for sulphur dioxide and suspended particulate (smoke) in the atmosphere.

Table 2-1

LIMIT VALUES FOR SULPHUR DIOXIDE AND SUSPENDED PARTICULATES
(As measured by the black-smoke method)

Limit values for sulphur dioxide expressed in $\mu g/m^3$ with the associated values for suspended particulates (as measured by the black-smoke method[1]) expressed in $\mu g/m^3$

Reference Period	Limit Value for Sulphur Dioxide	Associated Value for Suspended Particulates
Year	80 (median of daily mean values taken throughout the year)	>40 (median of daily mean values taken throughout the year)
	120 (median of daily mean values taken throughout the year)	≤40 (median of daily mean values taken throughout the year)
Winter (1 October to 31 March)	130 (median of daily mean values taken throughout the winter)	>60 (median of daily mean values taken throughout the winter)
	180 (median of daily mean values taken throughout the winter)	≤60 (median of daily mean values taken throughout the winter)
Year (made up of units of measuring periods of 24 hours)	250[2] (98 percentile of all daily mean values taken throughout the year)	>150 (98 percentile of all daily mean values taken throughout the year)
	350[2] (98 percentile of all daily mean values taken throughout the year)	≤150 (98 percentile of all daily mean values taken throughout the year)

[1] The results of the measurements of black smoke taken by the OECD method have been converted into gravimetric units as described by the OECD.

[2] Member States must take all appropriate steps to ensure that this value is not exceeded for more than three consecutive days. Moreover, Member States must endeavour to prevent and to reduce any such instances in which this value has been exceeded.

Table 2-2

Limit Values for Suspended Particulates (as measured by the black-smoke method [1]) expressed in $\mu g/m^3$

Reference Period	Limit Value for Suspended Particulates
Year	80 (median of daily mean values taken throughout the year)
Winter (1 October to 31 March)	130 (median of daily mean values taken throughout the winter)
Year (made up of units of measuring periods of 24 hours)	250[2] (98 percentile of all daily mean values taken throughout the year)

[1] The results of the measurements of black smoke taken by the OECD method have been converted into gravimetric units as described by the OECD.

[2] Member States must take all appropriate steps to ensure that this value is not exceeded for more than three consecutive days. Moreover, Member States must endeavour to prevent and to reduce any such instances in which this value has been exceeded.

2.2 Council Directive of 7 March 1985 on Air Quality Standards for Nitrogen Dioxide (85/203/EC OJEC 27.3.85, L87/1)

The Directive lays down limit values to protect human health (Annex I to the Directive) and stricter guide values to improve protection of human health and to protect the environment (Annex II) for nitrogen dioxide in air. It does not apply to occupational exposure or indoor air quality.

The limit value is 200 $\mu g/m^3$ (based on the 98th percentile of hourly mean values over the year) and has been applicable since 1 July 1987. The Member States must inform the EC of areas where this value is exceeded and draw up plans to meet the limit value "as rapidly as possible" and by 1 January 1994 at the latest. There are two guide values: a 50th percentile of 50 $\mu g/m^3$ and a 98th percentile of 135 $\mu g/m^3$, based on hourly mean values over the year.

Member States may set lower limit values in zones where there is a foreseeable increase in NO_2 from urban or industrial development. Lower guide values may be set in areas which are considered to need special environmental protection.

Member States must establish measuring stations in accordance with Annex III of the Directive, and report annually to the EC, supplying detailed information about NOx concentrations and abatement measures. Some specified information must be made available to the public as well. A reference method for analysis, based on chemiluminescence principles, is described in Annex IV of the Directive.

Measures taken under the Directive may not lead to a significant deterioration in air quality in zones where NOx pollution levels are low in relation to the limit values.

3.0 Atmospheric Releases of the New Facility

The NOx releases to atmosphere from a combustion turbine operating on gas or distillated oil can be minimized by the use of water or steam injection into the high pressure section or in some cases on the low pressure section of the turbine, this feature has been incorporated in the design of the GRIRO facility for the preferred option to limit even more the NOx releases. During the summer operation, this will be the normal operating mode since in order to operate the unit at one hundred percent electrical load may be necessary to utilize this feature as a heat sink to use the extra steam generated by the heat recovery steam generator.

The use of additional duct firing in the heat recovery steam generator using fuel oil will introduce to the atmosphere additional pollutants. However, the additional duct firing planned for the GRIRO facility will be very limited, and it is expected to operate on fuel oil only during the 2 to 3 severe winter months when gas availability is limited. This limited use will reduce the environmental releases well within the established EC limits.

The use of gas for duct firing will reduce the release of sulfur dioxide and suspended particles to a minimum. During the summer, with a reduced heat demand the duct firing will not be in operation, it is anticipated that duct firing will be required only 6 months a year.

For projects using combustion turbines similar as the proposed configuration for the GRIRO facility, manufacturers have guaranteed the emission releases. The following table shows a comparison between the EC guidelines and the manufacturer guarantees using distillated oil for an aeroderivative combustion turbine without steam injection.

Pollutant	EC Guideline	Manufacturer (3)(1) Guarantee
NOx (ppm)	200	197
SOx ($\mu g/m^3$)	120	SO_2 - 86 - SO_3 5
Particulates $\mu g/m^3$	80(2)	0.0196

(1) 100% load ISO conditions
(2) Winter (median of daily value taken throughout the year)
(3) No steam or water injection

With steam injection using distillated oil, NOx emissions as low as 75 ppm have been guaranteed by manufacturers of these types of combustion turbines.

XIII. ROMANIAN FOREIGN INVESTMENT LAW

This official translation of Romania's foreign investment law, which includes amendments adopted in June 1993 (3 ERR 481, 7/5/93), was provided by the Romanian Development Agency, the Romanian government agency that registers and monitors foreign investment.

FOREIGN INVESTMENT LAW
No. 35/3 April 1991 *

(* Republished in Monitorul Oficial no. 185/1993 on the basis of Art. 2 of Law no. 57/1993 regarding amendment and completion of Law no. 35/1991 on foreign investments.)

The Parliament of Romania passes the present law. To induce foreign investment in Romania the present law is passed comprising provisions meant to confer foreign investors guarantees and incentives as well as the complete and unrestrained use of the results of their activity.

Chapter I General Provisions

Art.1. For purposes of this law, the term "Foreign Investment in Romania" shall mean:

a) establishment of new companies, subsidiaries and branches, either having wholly owned foreign capital or by association with Romanian legal or natural persons, with observance of Company Law no. 31 of 1990;

b) participation in the increase of registered capital of an existing company or the acquisition of shares or capital stock belonging to such companies, as well as bonds and other securities;

c) concession, leasing or management contracts, as provided for by the law, of businesses, public services, production subunits pertaining to autonomous state enterprises or to commercial companies;

d) acquisition of ownership rights over movable and immovable property as well as other real estate rights, except for the land ownership rights;

e) acquisition of industrial and intellectual property rights;

f) acquisition of personal estate rights or other rights related to services having economic value that are associated to an investment;

g) purchase of production spaces and other buildings, except for residence buildings not related to the investment, as well as the construction thereof;

h) participation agreements for exploration, exploitation and production sharing of natural resources.

Art.2. "Participation" of foreign investors in Romania may consist of:

a) funds in freely convertible currencies;

b) machinery, equipment, means of transport, components, spare parts and other goods;

c) services, industrial and intellectual property rights (patents, licenses, know-how, trademarks, copyrights), expertise and methods of organization and management;

d) revenues and profits derived from activities carried out in Romania, as well as goods and values acquired with observance of legal provisions, after payment of taxes and duties as set forth by the law.

Art.3. The term "Foreign investor" shall mean any natural or legal person residing or, as the case may be, having its domicile or headquarters abroad, and which is conducting investment in Romania under any of the forms set forth by this law.

Art.4. Foreign investments may be effected in all sectors of industry, exploration and production of natural resources, agriculture, infrastructure and communication, civil and industrial works, scientific research and technology development, trade, transportation, tourism, banking and insurance services and other services, provided that they shall not:

a) infringe the environment protection regulations in force;

b) affect Romania's national security and defense interests;

c) harm the public order, health and good morals.

Chapter II Guarantees

Art.5. The foreign investments in Romania shall not be nationalized, expropriated, requisitioned or subjected to other measures of like effects, except in public interest, with observance of the legal procedures set forth by the law and against payment of a compensation equivalent to the affected investment which shall be prompt, adequate and effective.

Art.6. The compensation shall be assessed in relation to the market value of the investment upon the date of occurrence of one of the acts set forth in Art.5.

Art.7. In case the compensation cannot be ascertained as provided in Art.6 herein above, then it shall be determined by the parties on equitable principles, taking into account the capital invested, its appreciation or depreciation and the current returns.

Art.8. Should the compensation determined as per Art.6 or Art.7 hereinabove not be satisfactory to the foreign investor, then it shall be established upon the foreign investor's request through the courts of law, in accordance with the legal provisions.

Art.9. The foreign investors shall enjoy the rights to:

a) participate in the management and administration of the investment, in keeping with the terms of the contracts and by-laws agreed upon;

b) assign their contractual rights and obligations to other Romanian or foreign investors;

c) integrally transfer abroad the annual profits they are entitled to, under the conditions of the Romanian foreign currency provisions, after payment of taxes, duties and other obligations as set forth by the Romanian legislation;

d) transfer abroad, in keeping with the provisions of the contracts concluded, the amounts collected for copyrights, technical assistance, expertise and other services;

e) transfer abroad the amounts obtained from the sale of shares, bonds and other securities as well as those derived from liquidation of investments, under the conditions of the Romanian foreign currency provisions;

f) transfer abroad in the agreed upon freely convertible currency the amounts achieved as compensation in the event of the occurrence of one of the actions provided in Art.5 hereinabove.

Art.10. The foreign investments effected in accordance with the provisions of this law enjoy the legal status set forth hereby for the whole duration of their existence to the extent a subsequent law shall not set forth more favourable provisions.

Art.11. The foreign investors shall enjoy the legal status set forth by this law irrespective of their citizenship or, as the case may be, nationality.

Chapter III Incentives

Art.12. Imported machinery, equipment, installations, means of transportation and any other outfits necessary for investment are exempt from import customs duties provided that such imported items represent the equity contribution in kind or are purchased from the equity cash contribution of the foreign investor to the registered capital of the company or to any increase thereof.

Art.13. The raw materials, consummables, spare parts and other supplies, necessary for and effectively used by the foreign investor for its own production purposes are exempt from import customs duties for a period of 2 years, counted from the date the project is commissioned or, as the case may be, from the date of commencing the activity depending on the legal status of the foreign investment.

Art.14. Foreign investments are exempt from payment of tax on profit as follows:

a) investments in industry, agriculture, construction sector, exploration and exploitation of natural resources for a period of five (5) years from commencing productive activity;

b) investments in communication and transports, for a period of three (3) years from commencing the respective operations;

c) investments in trade, tourism, banking and insurance services, as well as any other services, for a period of two (2) years from commencing the respective operations.

Foreign investments defined at Art.1., letter a) of this law shall benefit from the tax exemptions provided by Art.14 hereinabove on condition that the total contribution in kind and cash effectively disbursed by the foreign investor accounts for at least 20% of the registered capital but no less than US$10,000.

Foreign investments that do not meet these conditions shall be subject to the provisions of the common law.

Art.15. In addition to the exemptions provided for herein above, reductions of the tax on profits are further granted after the expiration of the initial tax holiday period, as follows:

a) a 50% reduction of the tax due for the profits reinvested in enterprises set up in Romania with a view to widening and upgrading the technical and material basis, improving the manufacturing technologies or expanding the activity, to obtain additional profits, as well as for the investments aimed at protection of the environment;

b) a 25% reduction of the tax due, provided that one of the following conditions is met:

— at least 50% of the necessary raw materials, energy and fuel are provided through importation;

— at least 50% of the products and services are exported;

— more than 10% of the expenditures are made for scientific research and development of new technologies in Romania and for professional training;

— at least 50% of the machinery and other equipment necessary for developing existing investments are obtained from domestic production;

— at least 50 (fifty) new jobs are created through a new investment or expansions of existing investments.

Art.16. For investments effected in the fields of particular interest for the national economy, on proposal of the Government, additional facilities can be granted by law.

Art.17. In case voluntary liquidation of foreign investments occurs within a time span shorter than twice the period for which foreign investors enjoy the exemptions provided for by Art.14 hereinabove, foreign investors shall pay the taxes on profits imposed by the law for the whole duration of the investment. The taxes due in accordance with the provisions of the above paragraph shall be paid with priority out of the results deriving from the liquidation of the investment or out of the other rights the foreign investors are entitled to.

Chapter IV Promotion and Registration of Foreign Investments

Art.18. Foreign investments in Romania, irrespective of their legal status, shall be made on the basis of an application by the foreign investor registered with the Romanian Development Agency.

Art.19. The Romanian Development Agency shall study the reliability of the investor, the field and the legal form of the investment and the amount of the capital to be invested.

Art.20. The Romanian Development Agency answers the applications of foreign investors on the basis of data and information that it has available or that it may obtain upon request from the central and local organization of public administration as well as from autonomous state enterprises and commercial companies in the field of activity where the foreign investment shall be made. The ministries and the other central and local organizations of public administration shall answer within 10 days to the request of the Romanian Development Agency.

Art.21. The Romanian Development Agency shall answer the applications of foreign investors within 30 days from their registration. In the event that no confirmation is received by the foreign investor during the time period set forth in the above paragraph, the investment shall be deemed to have been approved and may be implemented.

Art.22. The foreign investors have the right to effect investments under the conditions set forth in the Romanian law, either on the basis of the confirmation issued by the Romanian Development Agency, or on the basis of foreign investor's application in the absence of any response from the Agency.

Art.23. The status of foreign investor in Romania is proven by the "Certificate of Investor" issued by the Romanian Development Agency.

The "Certificate of Investor" shall be issued at the foreign investor's request within 15 (fifteen) days from registering the application, upon presentation of relevant documents — the contract of association and the statute, the commercial contracts and other legal papers drafted in accordance with the provisions of the Romanian law and taking into consideration the legal status of the investment.

The "Certificate of Investor" is opposable to the Romanian authorities for the establishment of the foreign investors' rights.

Chapter V Financial, Foreign Currency and Commercial Operations

Art.24. The collection and payment operations related to the foreign investments shall be effected through accounts opened with banks having the headquarters in Romania or abroad, in accordance with the regulations set forth by the National Bank of Romania. Commercial companies with foreign participation and foreign investors shall have the right to dispose of the amounts available in their own accounts. The commercial companies may keep in their own accounts the amounts in foreign currency deposited as equity contribution to the registered capital.

Art.25. The accounts shall be fed from the investors' financial contribution, contracted loans and revenues.

Art.26. Joint ventures and other foreign investors may contract credits in Lei or other currencies from local financing institutions or loans in freely convertible currencies from foreign banks and financial institutions.

Art.27. The activity of the joint ventures and of the foreign investors shall be carried out on the basis of commercial contracts concluded with the observance of the legal provisions, at agreed-upon prices.

Art.28. The payments in foreign currency, including the amounts due to the foreign investors, shall be effected from the amounts available in their own accounts or by purchasing foreign currency at the official exchange rate.

Art.29. The profits in freely convertible currency and in lei due to the foreign investors can be used to make new investments in Romania, to buy Romanian goods and services or they may be exchanged on the financial market with observance of the legal provisions.

Chapter VI Final Provisions

Art.30. In the event foreign investments in Romania are made by setting-up commercial companies in association with Romanian natural or legal persons, the contribution of the Romanian associates to the registered capital may consist of the right of property or other real rights over land or other immovable necessary estate for the whole duration of the joint venture.

Art.31. The expatriate personnel necessary to operate the foreign investment shall be agreed upon by the contracting parties or by the foreign investor, as

the case may be and may hold only management and expert positions.

Art.32. The wages of local and expatriate personnel employed for operating of the foreign investments shall be settled by the agreement of the parties.

Art.33. The provisions of this law shall be applied to the extent that the international agreements and arrangements of foreign investments undersigned by Romania do not provide otherwise.

Art.34. Upon coming into effect of this law the Decree no. 424 of 1972 ruling the establishment and functioning of joint venture in Romania, the Decree-Law no. 96 of 1990 for inducement of foreign investment in Romania, as well as any other contrary legal provisions, are abrogated.

XIV. FINAL COMMENTS AND CONCLUSIONS

1.0 Sequence of Events

Chapters I through XI of this report reflect the basis for the recommendations made by K&M Engineering and Consulting Corporation for the rehabilitation of the GRIRO Power Plant; these sections, in final draft form, were submitted to GRIRO for review and comments on September 1993. K&M personnel attended meetings in Budapest in early December 1993 with GRIRO management, power plant personnel and engineering consultants to review the September draft report and obtain GRIRO comments prior to issuing the final report.

2.0 GRIRO Review of Draft Report

GRIRO, in cooperation with their engineering consultant PCMG S.A. of Bucharest, had reviewed the draft report submitted by K&M and agreed with K&M's recommendation of installing a combined cycle power plant; this option will not only meet the present demand but will also provide for the forecasted increase in district heating demand and the sale of electricity (the largest amount of all of the options) to RENEL. However, after consulting with Ministry of Industry and other government authorities, the implementation of the recommended combined cycle power plant will be relegated to a future date due to the following reasons:

- Contrary to previous commitments of fuel availability for the combustion turbine, the Ministry of Industry, due to an increase in agricultural production, cannot guarantee the availability of fuel for year-round operation.

- After discussions with the Romanian government, GRIRO, at this time, cannot finance the proposed combined cycle power plant.

3.0 Option Selected by GRIRO

After reviewing the draft report and considering the technical and financial constraints, GRIRO has selected a variation of Option IB for implementation; this option considered the installation of two 25 Mt/h gas and oil fired boilers. GRIRO would like to install three 25 Mt/h gas and oil fired boilers, keeping the existing 50 MT/H boiler in service; this option will meet the present district heating demand with a small excess to meet some of the future forecasted demand, and, in addition, will permit the retirement of the existing 1.6 MW steam turbine and installation of a new 2.7 MW steam turbine. The installation of this new equipment in the GRIRO boiler room will allow sufficient space for the installation of the recommended combined cycle power plant at a future date.

4.0 Future Actions to Implement the GRIRO Selected Alternate Option

During the December, 1993 meetings, GRIRO requested cooperation from RCG/Hagler, Bailly Inc. and K&M Engineering and Consulting Corporation for implementation of the installation of the new 25 Mt/h boilers and the 2.7 MW steam turbine, including the following:

A. 25 Mt/h boilers are not currently manufactured in Romania. GRIRO would like to obtain a licensing agreement with an American boiler manufacturer to build some of the boiler components in their shop and erect the boilers.

The following boiler components are not manufactured in Romania and will have to be supplied by the American boiler manufacturer:

- membrane tubes
- burners
- instrumentation and controls
- insulation

Some of the heavy components such as boiler drums and piping will be manufactured in Romania.

GRIRO will need cooperation to select and establish contacts with American boiler manufacturers to implement the project concept. One possibility also discussed is that the licensing agreement can be extended to manufacturing boilers for sale in Romania and eastern Europe; a GRIRO survey indicates that there is a market for small boilers.

B. GRIRO will need engineering support to perform the thermal and financial analysis in the same detail as performed for the selected option in the draft report.

The steps needed to implement the option selected by GRIRO are outside the scope of this study; GRIRO plans to contact USAID to request additional support.

5.0 Possible Source of Financing

An order of magnitude estimate for the installation of the three 25 Mt/h boilers and the new 2.7 MW steam turbine is 7.0 million dollars. During the December, 1993 meetings in Bucharest, GRIRO stated that they are willing to finance 40% of the cost in lei; this amount should be sufficient to cover the Romanian supply, however, outside hard currency financing will be required for the 4.2 million dollars balance.

K&M met in Bucharest with Chemical Bank and the European Bank for Reconstruction and Development (EBRD) to review the possibility of obtaining the necessary hard currency financing for this modified option. According to these contact sources, 4.2 million dollar loan is considered to be a very small loan, and will be difficult to obtain, especially under present circumstances. The only possibility is to add this amount to a larger loan. In this regard, the EBRD is currently negotiating 125 million ECUs (1 ECU = $1.1299 as of 12/21/93) loan with the Bucharest City Hall to finance the upgrading of RADAT District Heating Facilities, and EBRD believes that it is still possible to add the 4.2 million dollars needed by GRIRO to the proposed RADAT loan. As RADAT will be the major beneficiary of the GRIRO facility upgrade, GRIRO should discuss this possibility with RADAT and the Bucharest City Hall.