PN-ACB-173

Environmental Policy and Technology Project

For the New Independent States of the former Soviet Union

UZBEKISTAN

CONCEPT REPORT

Clarification System for the Nukus and Urgench Water Treatment Plants

by Randy Hoffman - June 1996
Delivery Order 6, Task 1

Prepared for:
ENI/EEUD/ENR
U.S. Agency for International Development

Prepared by:
EPT Regional Office for the Central Asian Republics
Environmental Policy and Technology Project
A USAID Project Consortium Led by CH2M HILL

July 26, 1996

Section 1
Background

This project is a part of the program as defined in the Memorandum of Understanding executed between the Government of the United States and the Government of Uzbekistan on April 20, 1994, to "promote improved environmental health" in the environmental disaster areas around the Aral Sea.

Environmental Policy and Technology (EPT) Project field investigations completed in August 1995 defined several improvements at the Nukus and Urgench water treatment plants that if implemented could help improve potable water quality being delivered to these cities. The recommended improvements involve the plant's clarification system that removes suspended solids from the raw water supply.

The clarification system at both plants rely on two-stage clarification to remove suspended and colloidal material prior to filtration. The first stage uses four circular, radial flow clarifiers operating in parallel. Aluminum sulfate (alum), a coagulant, is introduced into a flow splitting structure upstream of the clarifiers. The second stage consists of six rectangular, horizontal flow clarifiers operating in parallel. Electrolytic polymer, a coagulant aid, is introduced into a mixing facility upstream of these clarifiers.

This clarification configuration is essentially equivalent to systems used successfully in the U.S. and Europe. However, the plant clarification system performance is unsatisfactory. The reasons for the poor performance is attributable to a combination of equipment inadequacies and untrained operators. The equipment inadequacies will be addressed in this report, as part of Delivery Order (DO) 6. Training of operators is addressed in DO 12.

Due to the poor performance of the plant clarifiers, the turbidity of water applied to the filters is 20 NTU and higher (in the United States, a typical filter applied water turbidity is 1-5 NTU). The high turbidity of the applied water results in short filter runs (time between filter backwash cleaning) of 2 to 8 hours. Filter runs should average between 24 and 72 hours. Poor clarification also leads to chronically poor filter performance which increases the public health risk of exposure to pathogenic organisms.

Specific recommendations are given for improvements to the following areas in the plant's clarification system:

1) Clarification Equipment
   a) Raw Water Flow Split to Radial Clarifiers

2) Coagulation Equipment
   a) Alum Feed Flow Split
   b) Alum Feed Pumps
   c) Alum Transfer Pumps

2) Coagulation Equipment (continued)
   d) Alum Mix Tank Valves and Control System
   e) Polymer Feed Pumps

Section 2

Conceptual Design

Several areas of concern were discovered during the evaluation of the clarification systems, and modifications to these systems are proposed. The clarification systems at both plants are almost identical. Therefore the following conceptual design is applicable to both the Nukus and Urgench plants.

2.1 Clarification Equipment: Raw Water Flow Split

Existing System. Water enters the plant at the raw water head works splitter box. The splitter box should divide the incoming water into 4 equal flow streams to the radial clarifiers. However, the existing downward acting sluice gates at each section are not hydraulically able to split the flow equally to each clarifier. There is no ability to measure the amount of flow to the clarifiers, making calculation of chemical coagulant feed rates difficult.

Proposed System. We propose to install four adjustable weir gates in the head works splitter box to evenly split incoming water flow to the 4 radial clarifiers. A staff gauge is proposed to be installed to allow calculation of flow to the clarifiers.

Equipment:

Name	Raw Water Sluice Gates
Type	Aluminum Weir Gate
Number	4 per plant

2.2 Coagulation Equipment

2.2.1 Alum Flow Split

Existing System. Alum is fed through a single pipe to the head works splitter box. The alum is split unevenly between the 4 radial clarifiers using a combination of tee fittings. This results in unequal dosing of alum to the clarifiers.

Proposed System. An alum feed line is proposed for each radial clarifier. Each line will feed the appropriate amount of alum to its respective clarifier.

2.2.2 Alum Feed Pumps

Existing System. Alum is fed to the existing dose points with 3 positive-displacement piston pumps. Concerns include inadequate chemical feed control and the poor condition of the pumps. Some of the feed pumps were out-of-service awaiting repair during the site visit.

Proposed System. New alum feed pumps are recommended. To properly control the primary feed to the 4 radial clarifiers, a single pump per clarifier is used. Two additional pumps are included to feed alum to the secondary feed points at the horizontal clarifiers. The pumps are piped together to allow each pump to function as a back-up for another.

Progressing cavity (PC) pumps are proposed for this application. A PC pump in conjunction with a variable speed drive provides the ability to meter chemical flow while being mechanically simple with few moving parts.

Equipment:

Name	Alum Feed Pumps
Type	Progressing Cavity
Number	6 per plant
Capacity	8.5 m^3/hr at 1.3 atm

Design Criteria:

Alum Concentration (minimum)	1%
Alum Concentration (maximum)	6%
Dose (minimum)	7 mg/L
Dose (Maximum)	210 mg/L
Total Plant Flow	240,000 m^3/d

2.2.3 Alum Transfer Pumps

Existing System. Alum is transferred from alum mixing tanks to alum feed tanks with 3 centrifugal pumps. The pumps are in poor condition.

Proposed System. New alum transfer pumps are recommended. Two centrifugal pumps can be used to replace the 3 existing pumps. One of the 2 pumps will function as a back-up to the other.

Equipment:

Name	Alum Transfer Pumps
Type	Centrifugal
Number	2 per plant
Capacity	48 m^3/hr at 0.6 atm

Design Criteria:

Alum Concentration (minimum)	1%
Alum Concentration (maximum)	6%
Feed Tank Fill Time	min.

2.2.4 Alum Mix Tank Valves and Control System

Existing System. There are three existing mix tank valves that are operated whenever a batch of alum is mixed. The valves control mixing air, water addition, and alum solution withdrawal. These valves are located in a pipe gallery that is difficult to access. The valves are operated manually, along with the alum transfer pumps, to mix and transfer a batch of alum solution.

Proposed System. To improve ease of operation during tank mixing and transfer, it is recommended to provide electrically operated valves for the air, plant water, and alum solution piping for the two mix tanks currently in use. A control panel is recommended to be placed at the mixing tanks, with controls for the transfer pumps and mixing tank valves. Readouts of the feed tank level and alum solution flow from the mix tank will also be included. This will allow the plant operator to operate the mixing and transfer of alum solution from one location.

2.2.5 Polymer Feed Pumps

Existing System. Polymer is fed to the existing dose points with 2 positive-displacement piston pumps. Concerns include inadequate mechanical control and the poor condition of the pumps.

Proposed System. New polymer feed pumps are recommended. The pumps are piped to feed polymer to the head works splitter box or alternately to the secondary feed points at the horizontal clarifiers. Each pump will function as a back-up for the other.

Progressing cavity (PC) pumps are proposed for this application. A PC pump in conjunction with a variable speed drive provides the ability to meter chemical flow while being mechanically simple with few moving parts.

Equipment:

Name	Polymer Feed Pumps
Type	Progressing Cavity
Number	2 per plant
Capacity	8.5 m^3/hr at 7 atm

Design Criteria:

Polymer Concentration (minimum)	0.6%
Polymer Concentration (maximum)	1.2%
Dose (minimum)	0.31 mg/L
Dose (Maximum)	3.10 mg/L
Total Plant Flow	240,000 m^3/d

Section 3
Materials Supply

The design of the clarification and coagulation equipment installation will proceed with the assumption that the majority of the equipment, supplies, and tools will be shipped in from the United States. Pumps, piping, valves, fittings, supports, controls, wiring, etc., will all be shipped to the plant sites.

Tools for the installation will also be included in the shipment. They will be left behind at the plant sites for future use by maintenance staff. Storage boxes will also be included in the shipment to provide safe storage of the tools.

A small amount of equipment and supplies are presumed to be provided by the plant. It is assumed that concrete will be available to the plant for construction for use as pump pads.

Section 4
Installation Procedures

Installation will be accomplished by expatriate as well as national staff. An EPT construction manager will be on site for the duration of construction. The construction manager will be assisted by a Russian-speaking engineer who will act as foreman. Communication between the construction manager and the foreman will be assisted by an interpreter.

The construction work force will be made up of plant staff. The work force will provide the labor to install pumps, piping, electrical wiring, concrete, etc., and will be directed by the foreman for the day-by-day specific activities. CH2M HILL/EPT staff will be on site to check the installation and help with the start-up of the coagulation system.

Project Schedule:

Design Coagulant System Improvements	Sept. 1, 1995 - Feb. 22, 1996
Acquire Coagulant List Approval	Nov. 3, 1995 - Dec. 14, 1995
Order and Ship Coagulant Equipment	Jan. 12, 1996 - Aug. 2, 1996
Install and Commission Coagulant Equipment	May 13, 1996 - Nov. 1, 1996

Section 5
Coagulation System Schematics

Attached are schematics of the alum transfer and feed system, and the polymer feed system.

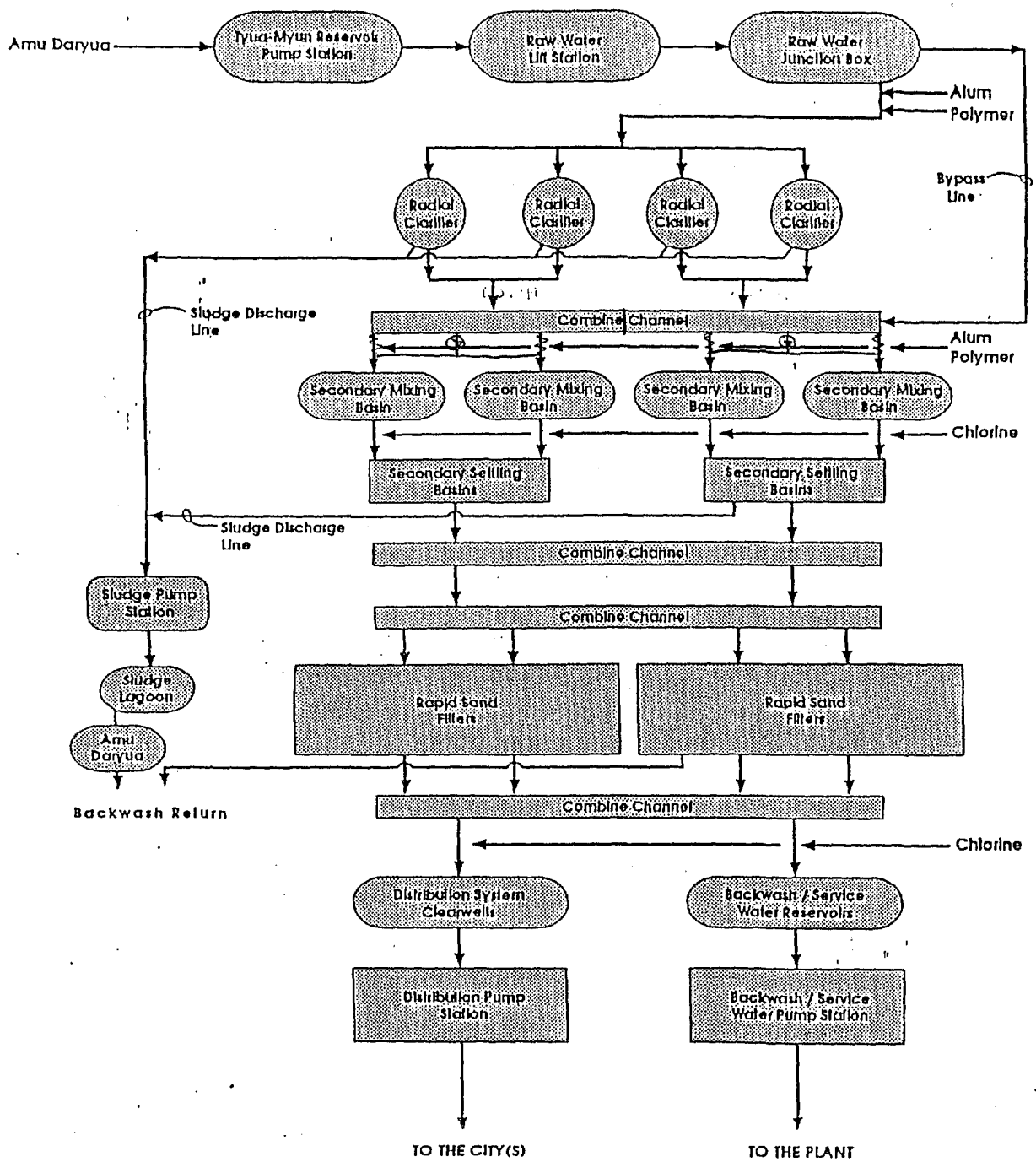

EXISTING WATER TREATMENT PLANT PROCESS DIAGRAMS
Tuyamuyun-Nukus and Tuyamuyun-Urgench, Uzbekistan

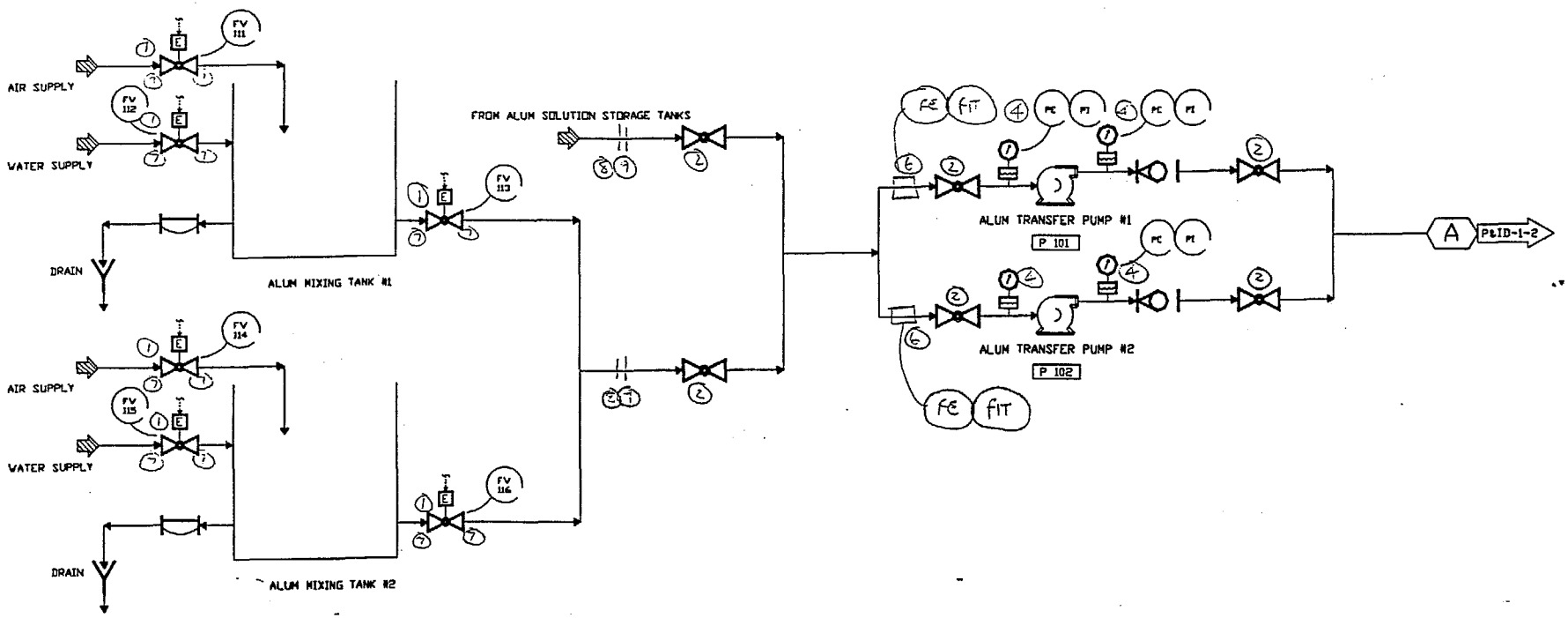

100191.10.02	ALUM MIXING & TRANSFER
H. W.	ALUM TREATMENT PID
D. N.	NUKUS AND URGENCH
D. N.	
USAID-UZBEK	100 / P&ID-1-1
PID 001.DWG	NTS / H. W.

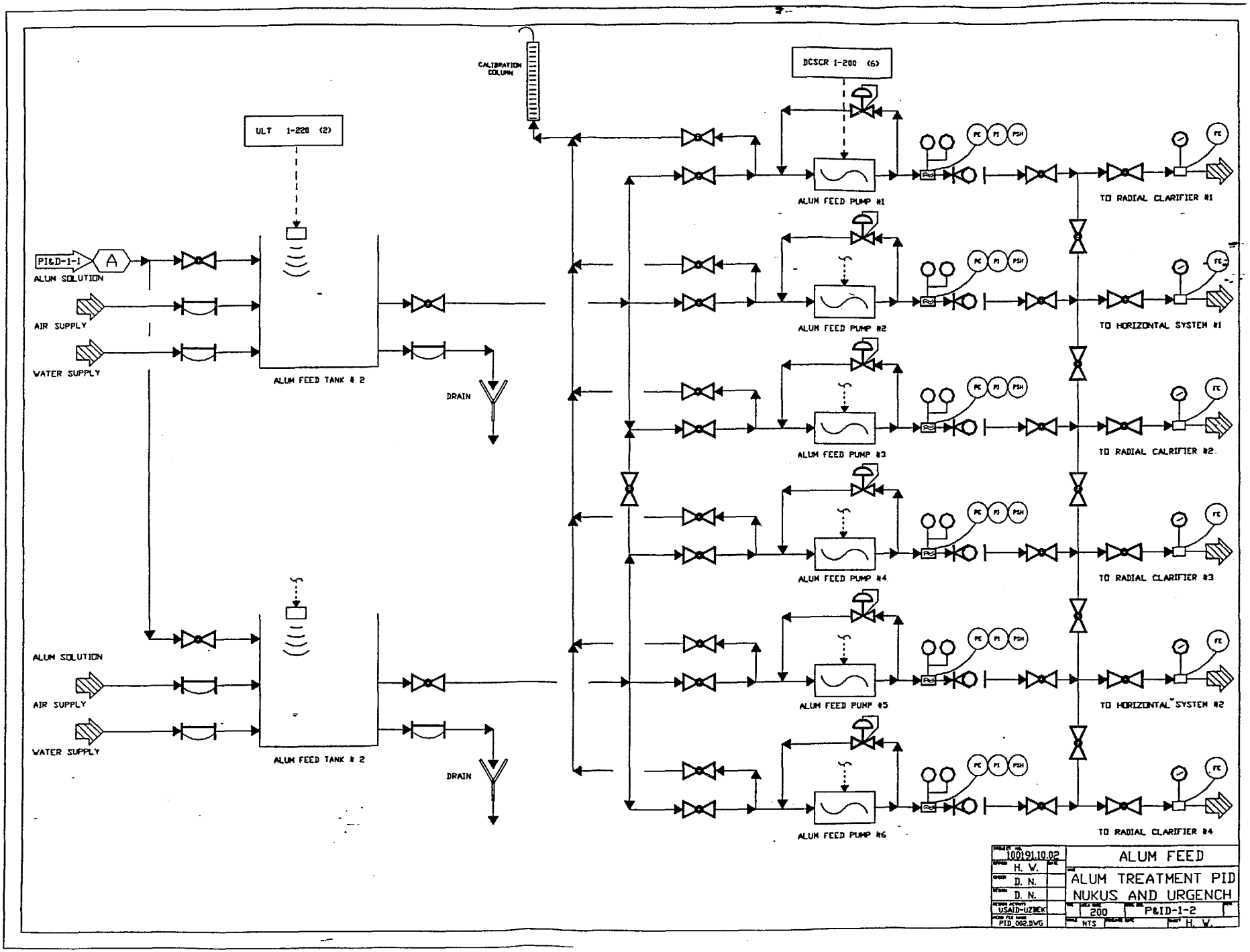
CALIBRATION COLUMN
DCSCR 1-200 (6)
ULT 1-220 (2)
PI&D-1-1
A
ALUM SOLUTION
AIR SUPPLY
WATER SUPPLY
ALUM FEED TANK # 2
DRAIN
ALUM SOLUTION
AIR SUPPLY
WATER SUPPLY
ALUM FEED TANK # 2
DRAIN
ALUM FEED PUMP #1
ALUM FEED PUMP #2
ALUM FEED PUMP #3
ALUM FEED PUMP #4
ALUM FEED PUMP #5
ALUM FEED PUMP #6
PC
PI
PSH
FC
TO RADIAL CLARIFIER #1
TO HORIZONTAL SYSTEM #1
TO RADIAL CALRIFIER #2
TO RADIAL CLARIFIER #3
TO HORIZONTAL SYSTEM #2
TO RADIAL CLARIFIER #4
100191.10.02
H. W.
D. N.
D. N.
USAID-UZBEK
PID_002.DWG
ALUM FEED
ALUM TREATMENT PID
NUKUS AND URGENCH
200
P&ID-1-2
NTS
H. W.

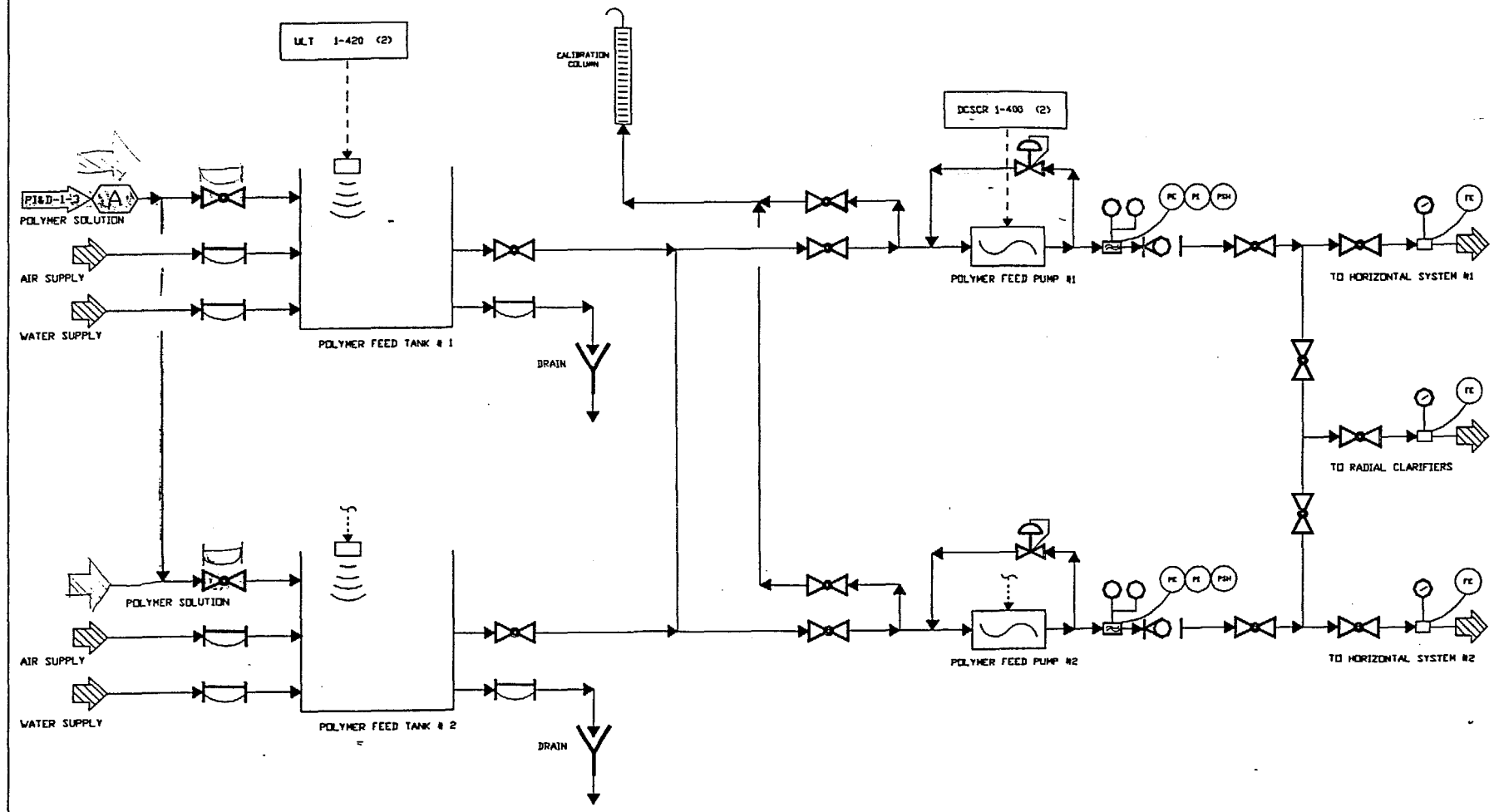

100191.10.02	POLYMER FEED
H. W.	
D. N.	POLYMER TREATMENT PID
D. N.	NUKUS AND URGENCH
USAID-UZBEK	400 P&ID-1-4
PID_004.DWG	NTS H. W.

9