PN-ACB-141

# Environmental Policy and Technology Project

Contract No. CCN-0003-Q-00-3165

KAZAKSTAN

# CHECK VALVE, BUTTERFLY VALVE AND FLOWMETER O&M MANUAL

PUMP STATIONS

**January 1997**

Prepared for:
Central Asia Mission
**U.S. Agency for International Development**

Prepared by:
Central Asia Regional EPT Office in Almaty, Kazakstan
Environmental Policy and Technology Project
For the New Independent States of the former Soviet Union
A USAID Project Consortium Led by CH2M HILL

TABLE OF CONTENTS

Page

**Section A**
Check valve.....1

**Section B**
Butterfly valve.....8

**Section C**
Flowmeter.....13

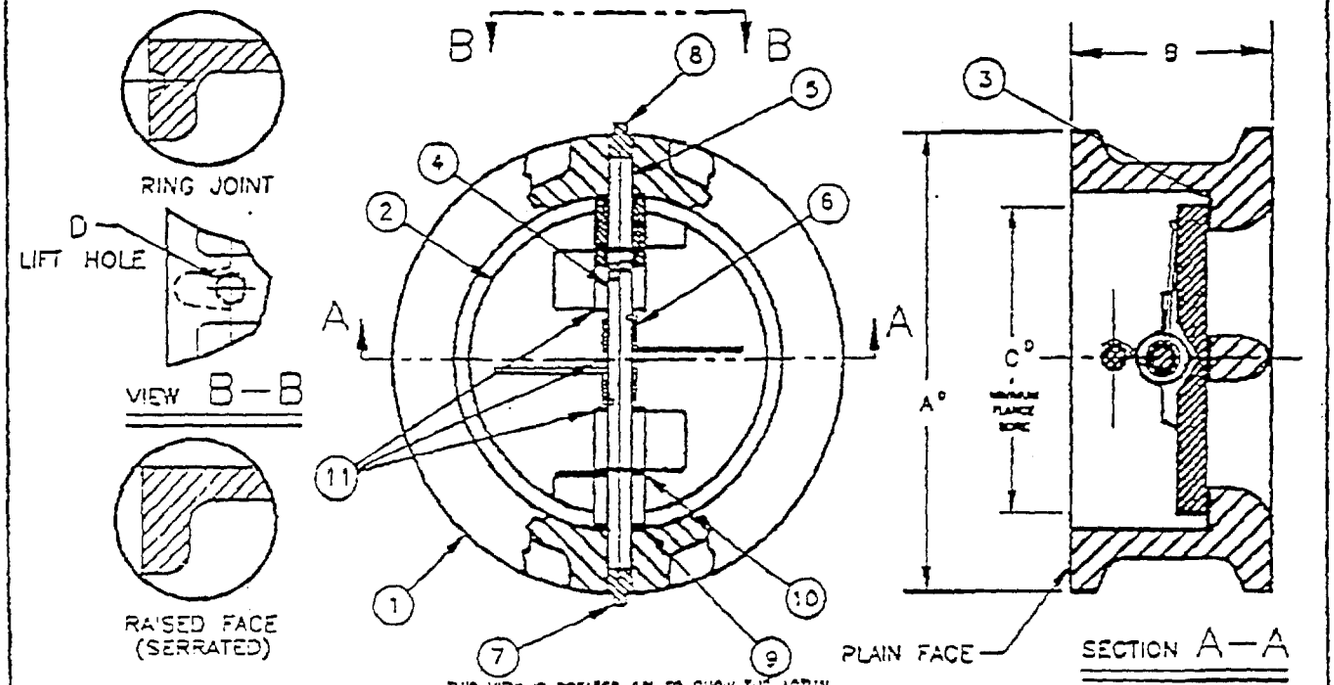


DRAWING IS TYPICAL. ACTUAL QUANTITIES FOR COMPONENTS ARE SHOWN IN TABLE.

SIZE: 6",8",12",14"

FIG. NO.: G12HMP

MODEL NO.: A

CWP: 250 PSI*

FACING: PLAIN FACE

ANSI CLASS: 125

| NO. | PART NAME | QTY. | MATERIAL |
|---|---|---|---|
| 1 | BODY | 1 | ASTM A126 BS1452 GR 220 |
| 2 | PLATE | 2 | (ALUM.BR.) BS1400 GR AB-2 |
| 3 | SEAL | * | BUNA N |
| 4 | STOP PIN | 1 | 316 SS |
| 5 | HINGE PIN | 1 | 316 SS |
| 6 | SPRING | 2 | INCONEL 600 |
| 7 | STOP PIN RETAINER | 2 | C 1 |
| 8 | HINGE PIN RETAINER | 2 | C 1 |
| 9 | BODY BEARING | 2 | TEFLON |
| 10 | PLATE BEARING | 2 | TEFLON |
| 11 | SPRING BEARING | 3 | TEFLON |

* SEAT IS INTEGRAL PART OF BODY

*MAX.NON-SHOCK WORKING PRESS.
*232 PSI @ 14"

| DIMENSIONAL DATA | | | | |
|---|---|---|---|---|
| SIZE | A° | B | C° | D |
| 6 | 8.75 | 3.00 | 6.05 | 5/8-15UNC |
| 8 | 11.00 | 3.75 | 7.97 | 1/2-13UNC |
| 10 | 13.38 | 4.25 | 10.00 | 5/8-11UNC |
| 12 | 16.12 | 5.62 | 11.94 | 3/4-10UNC |
| 14 | 17.75 | 7.25 | 12.50 | 3/4-10UNC |
| 16 | 20.25 | 7.50 | 15.00 | 1-8UNC |
| 18 | 21.62 | 8.00 | 16.88 | 1-8UNC |
| 20 | 23.88 | 8.38 | 18.61 | 1-8UNC |

TAG: -
COMPANY: CAROTEK
REFERENCE: -
STOCKHAM RG#
FILE NO. 00000057
Date: 05-01-1996 @ 11:16
BY:

STOCKHAM
DUO-CHEK
VALVE INSTALLATION DIMENSIONS
AND PARTS LIST
STYLE "G" 125 CLASS

DWG. NO.
CD0095



BEST AVAILABLE DOCUMENT

3

RING JOINT

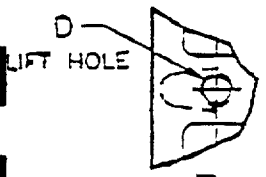


VIEW B—B

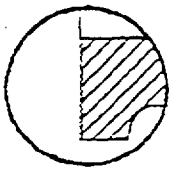

RAISED FACE (SERRATED)

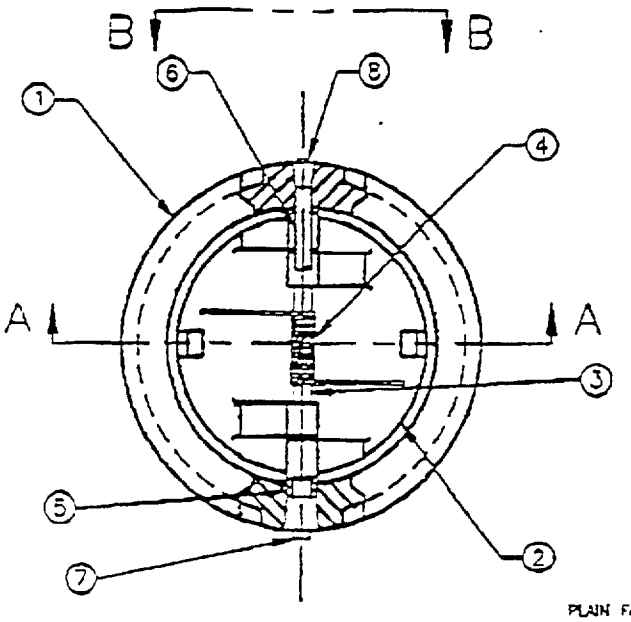


THIS VIEW IS ROTATED 90° TO SHOW THE ACTUAL OPERATING POSITION OF THE VALVE. THE PIN MUST BE VERTICAL FOR HORIZONTAL FLOW.

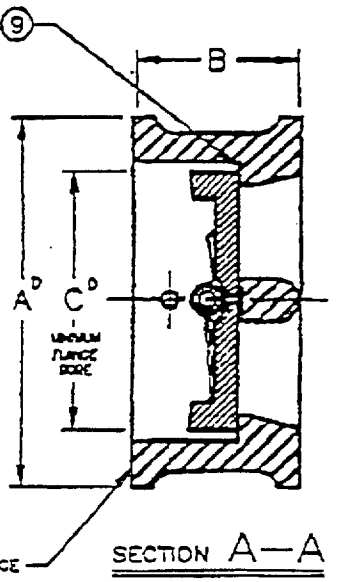


SECTION A—A

DIRECTION OF FLOW

DRAWING IS TYPICAL, ACTUAL QUANTITIES FOR COMPONENTS ARE SHOWN IN TABLE.

| NO. | PART NAME | QTY. | MATERIAL |
|---|---|---|---|
| 1 | BODY | 1 | ASTM A126 CLASS B |
| 2 | PLATE | 2 | B148 ALLOY 952 |
| 3 | HINGE PIN | 1 | 316 SS |
| 4 | SPRING | 1 | 316 SS |
| 5 | THRUST BEARINGS | 2 | 316 SS |
| 6 | STOP PIN | 1 | 316 SS |
| 7 | HINGE PIN RET. | 2 | STEEL |
| 8 | STOP PIN RET. | 2 | STEEL |
| 9 | SEAT | * | BUNA—N |

* SEAT IS INTEGRAL PART OF BODY

SIZE: 8"

FIG. NO.: A-250-H2NSF

MODEL NO.: A

CWP: 500

FACING: PLAIN FACE

ANSI CLASS: 125/250

| DIMENSIONAL DATA | | | | |
|---|---|---|---|---|
| SIZE | A D | B | C D | D |
| 2 | 4.12 | 2.12 | — — — | --- |
| 2½ | 4.88 | 2.38 | 2.12 | --- |
| 3 | 5.38 | 2.62 | 2.00 | --- |
| 4 | 6.88 | 2.62 | 3.50 | --- |
| 5 | 7.75 | 3.25 | 4.62 | --- |
| 6 | 8.75 | 3.75 | 5.50 | ½—13UNC |
| 8 | 11.00 | 5.00 | 7.50 | ½—13UNC |
| 10 | 13.38 | 5.50 | 9.56 | ¾—11UNC |
| 12 | 16.12 | 7.12 | 11.38 | ¾—10UNC |

TAG: —
COMPANY: CAROTEK
REFERENCE: —
STOCKHAM RG#
FILE NO. 00000059
Date: 04-25-1996 @ 15:32
BY:

| | | |
|---|---|---|
| | MARLIN VALVE<br>VALVE INSTALLATION DIMENSIONS AND PARTS LIST<br>STYLE "A" 125 CLASS | DWG. NO.<br>CD0075 |



4

# MARLIN STYLE A

This is our basic wafer check valve design. It is a flangeless dual disc, check valve that mounts between two flanges. The non-slamming, high performance design of the Style A makes it an excellent valve for pump, blower, and compressor discharge service.*

The vast range of sizes, pressure classes, and the materials of construction available make the Marlin Style A dual disc check valve suitable for use in all industries.

Marlin Style A check valves have been used extensively for years in petroleum refineries, oil and gas pipelines, gas meter runs, $CO_2$, nitrogen, and steam injection recovery systems, pulp and paper mills, chemical plants, HVAC, power plants, marine, and other industries.

*Consult factory for compressor discharge applications.

# MARLIN STYLE AP*

Many industries are concerned about fugitive emissions escaping their piping systems. The Marlin Style AP Retainerless Dual Disc Check Valve was designed for hazardous or lethal service applications to prevent possible leak paths through the valve body into the atmosphere. This is accomplished by a design which incorporates an innovative retention system utilizing a solid one-piece body eliminating the use of pipe plugs for pin retainers in wafer check valves or bolted bonnets in swing check valves.

Until this design, the solution to eliminate leak paths has been to seal weld the pin retainers or bonnets to prevent media from escaping the valve body. This procedure rendered the valves non-field repairable, however, the Marlin Style AP valves are totally field repairable.

Marlin Style AP valves conform to the same standards and contain the same closure mechanism which has been performance proven by years of use. These valves are available in all sizes, pressure classes and materials as the Marlin Style A.

*Patented

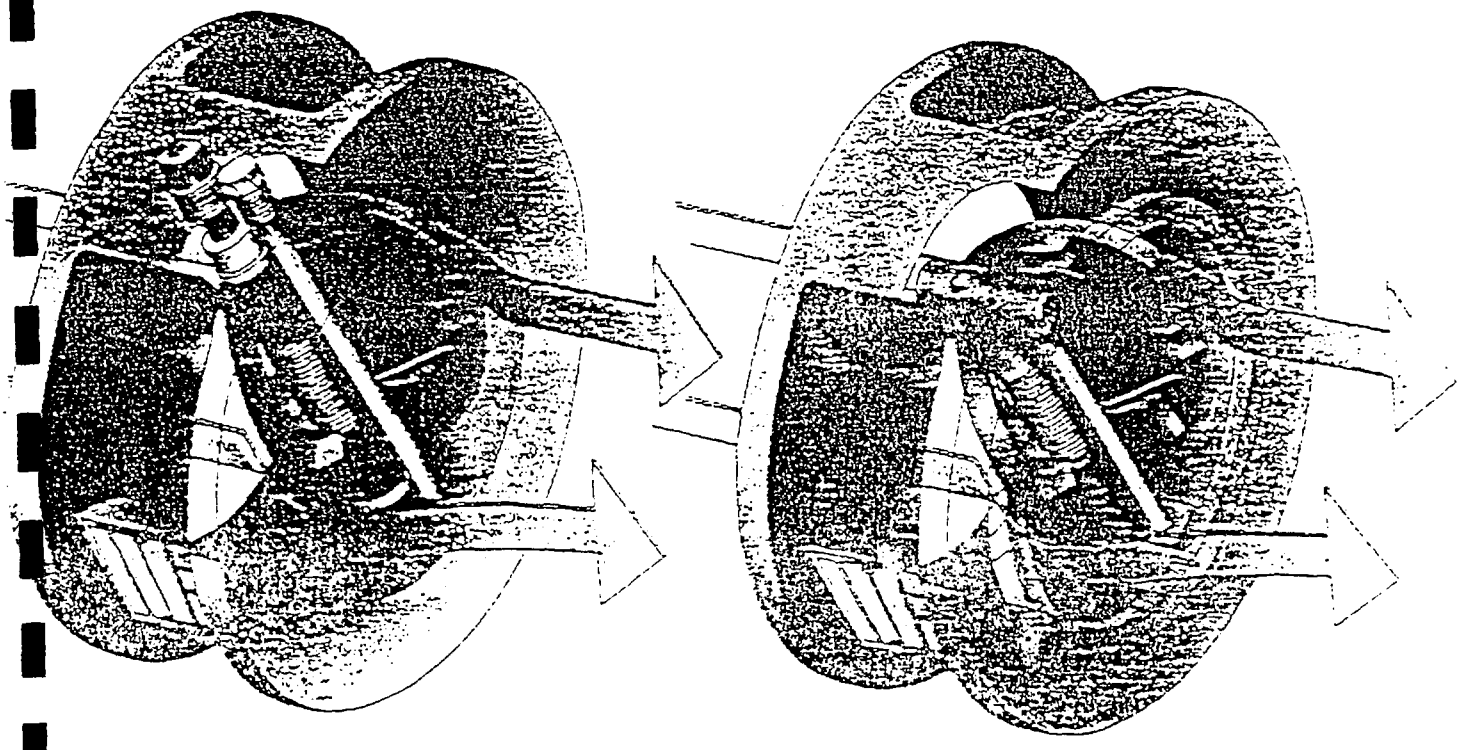

With Retainers

Retainerless



BEST AVAILABLE DOCUMENT

5

# STANDARD MATERIALS OF CONSTRUCTION (CONT'D)

## END CONNECTIONS

F — Plain (Fits between Flat Faced Flanges)
R — Serrated (Fits between Raised Faced Flanges)
J — RTJ (Fits between Ring Type Joint Flanges)

## COATINGS

Standard materials such as sacrificial zinc, coal tar epoxy and potable water coatings are readily available. Other coatings can be furnished upon request.

# FLANGE SERIES

| ORDERING NUMBER | ANSI RATING | ORDERING NUMBER | API RATING |
|---|---|---|---|
| 125 | 125 | | |
| 150 | 150 | | |
| 250 | 250 | 2000 | 2000 |
| 300 | 300 | | |
| 400 | 400 | | |
| 600 | 600 | 3000 | 3000 |
| 900 | 900 | | |
| 1500 | 1500 | | |
| 2500 | 2500 | 5000 | 5000 |

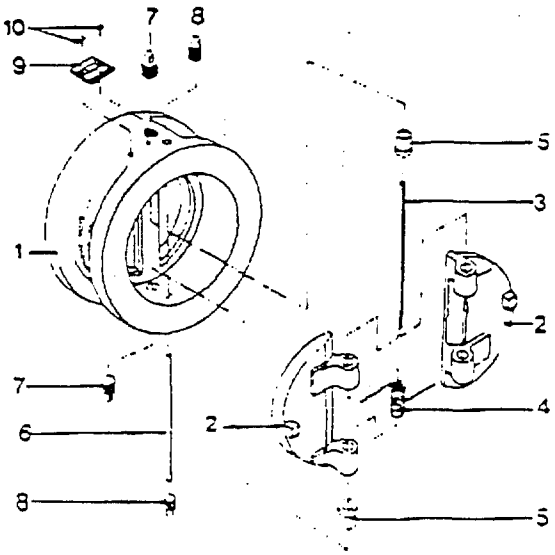


STYLE A, L, T

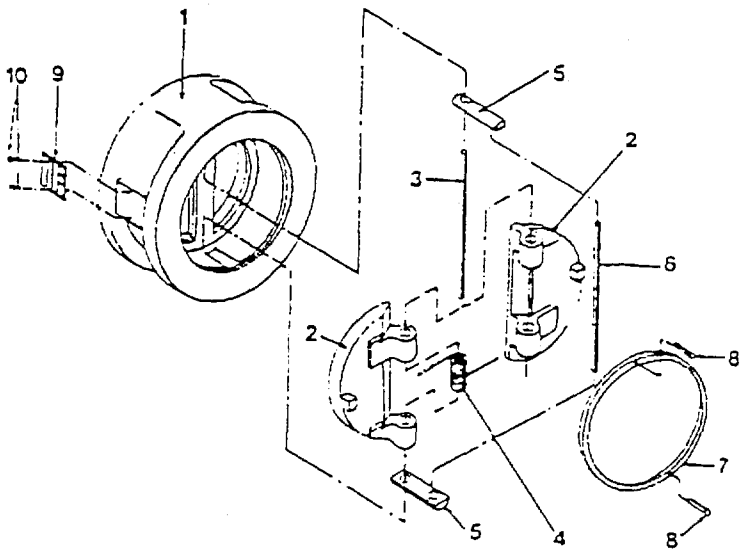


STYLE AP, LP, TP

1 — Body
*2 — Disc
*3 — Hinge Pin
*4 — Spring
*5 — Radial-Thrust Bearing
6 — Stop Pin
7 — Hinge Pin Retainers
8 — Stop Pin Retainers
9 — Name Tag
10 — Drive Screws

1 — Body
*2 — Discs
*3 — Hinge Pin
*4 — Spring
*5 — Carriers
6 — Stop Pin
*7 — Retaining Ring
*8 — Ring Screws
9 — Name Tag
10 — Drive Screws

*Recommended Spare Parts

When ordering spare parts, specify the complete valve figure number and include the part number in parentheses after it.
Example: 12-A-300-CCPYR(2) would specify a disc.



BEST AVAILABLE DOCUMENT

6

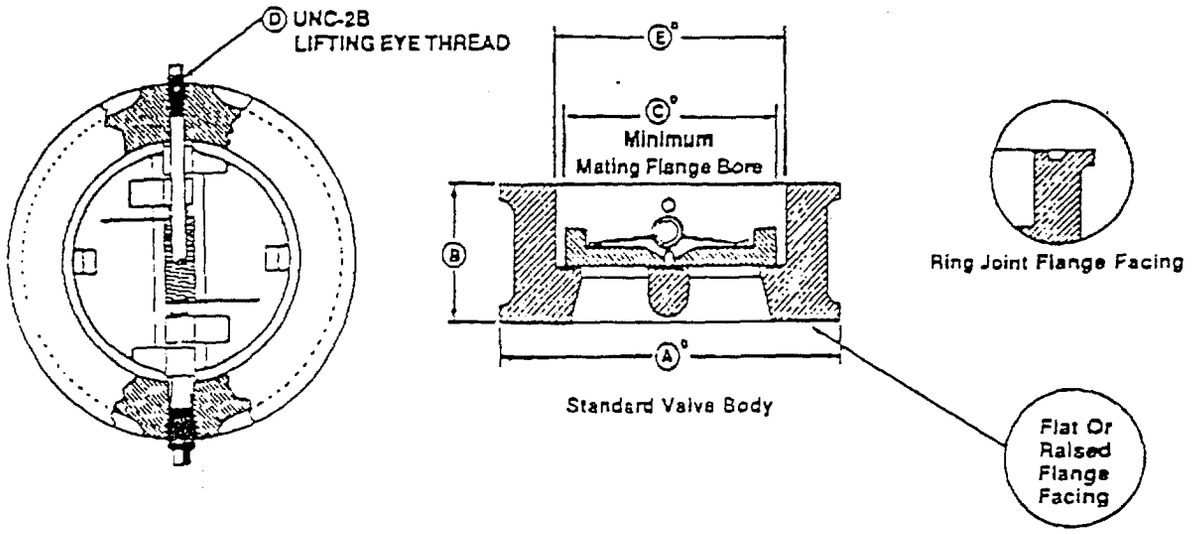


Hinge Pin Must Be Vertical For Horizontal Flow.

| SIZE | SERIES | TYPE FACING | A[D] | | B | | C[D] | | D | E[D] | | ESTIMATED WEIGHT | |
|---|---|---|---|---|---|---|---|---|---|---|---|---|---|
| | | | mm | in | mm | in | mm | in | | mm | in | Kg | Lb |
| 2" 50mm | 125 | PLAIN | 105 | 4 1/16 | 54 | 2 1/16 | 0 | 0 | None | 60 | 2 3/8 | 1.8 | 4 |
| | 150 | RF/RJ-22 | 105 | 4 1/16 | 60 | 2 3/8 | 0 | 0 | None | 60 | 2 3/8 | 2.7 | 6 |
| | 250 | RF | 111 | 4 3/16 | 54 | 2 1/16 | 0 | 0 | None | 60 | 2 3/8 | 1.8 | 4 |
| | 300-400-600 | RF/RJ-23 | 111 | 4 3/16 | 60 | 2 3/8 | 0 | 0 | None | 60 | 2 3/8 | 2.7 | 6 |
| | 900-1500 | RF/RJ-24 | 143 | 5 5/16 | 70 | 2 3/4 | 0 | 0 | None | 60 | 2 3/8 | 5.9 | 13 |
| | 2500 | RF/RJ-26 | 146 | 5 3/4 | 70 | 2 3/4 | 0 | 0 | None | 60 | 2 3/8 | 6.4 | 14 |
| 2 1/2" 65mm | 125 | PLAIN | 124 | 4 7/8 | 60 | 2 3/8 | 54 | 2 1/8 | None | 89 | 3 1/2 | 3.2 | 7 |
| | 150 | RF/RJ-25 | 124 | 4 7/8 | 67 | 2 5/8 | 54 | 2 1/8 | None | 89 | 3 1/2 | 4.1 | 9 |
| | 250 | RF | 130 | 5 1/8 | 60 | 2 3/8 | 54 | 2 1/8 | None | 89 | 3 1/2 | 3.2 | 7 |
| | 300-400-600 | RF/RJ-26 | 130 | 5 1/8 | 67 | 2 5/8 | 54 | 2 1/8 | None | 89 | 3 1/2 | 4.5 | 10 |
| 3" 80mm | 125 | PLAIN | 137 | 5 3/8 | 67 | 2 5/8 | 51 | 2 | None | 89 | 3 1/2 | 4.1 | 9 |
| | 150 | RF/RJ-29 | 137 | 5 3/8 | 73 | 2 7/8 | 51 | 2 | None | 89 | 3 1/2 | 5.4 | 12 |
| | 250 | RF | 149 | 5 7/8 | 67 | 2 5/8 | 51 | 2 | None | 89 | 3 1/2 | 4.1 | 9 |
| | 300-400-600 | RF/RJ-31 | 149 | 5 7/8 | 73 | 2 7/8 | 51 | 2 | None | 89 | 3 1/2 | 5.4 | 12 |
| | 900 | RF/RJ-31 | 168 | 6 5/8 | 83 | 3 1/4 | 57 | 2 1/4 | None | 89 | 3 1/2 | 10.9 | 24 |
| | 1500 | RF/RJ-33 | 175 | 6 7/8 | 83 | 3 1/4 | 57 | 2 1/4 | None | 89 | 3 1/2 | 11.8 | 26 |
| | 2500 | RF/RJ-32 | 197 | 7 3/4 | 86 | 3 3/8 | 57 | 2 1/4 | None | 89 | 3 1/2 | 14.1 | 31 |
| 4" 100mm | 125 | PLAIN | 175 | 6 7/8 | 67 | 2 5/8 | 89 | 3 1/2 | None | 114 | 4 1/2 | 5.9 | 13 |
| | 150 | RF/RJ-36 | 175 | 6 7/8 | 73 | 2 7/8 | 89 | 3 1/2 | None | 114 | 4 1/2 | 7.7 | 17 |
| | 250 | RF | 181 | 7 1/8 | 67 | 2 5/8 | 89 | 3 1/2 | None | 114 | 4 1/2 | 5.9 | 13 |
| | 300 | RF/RJ-37 | 181 | 7 1/8 | 73 | 2 7/8 | 89 | 3 1/2 | None | 114 | 4 1/2 | 7.7 | 17 |
| | 400 | RF/RJ-37 | 178 | 7 | 79 | 3 1/8 | 89 | 3 1/2 | None | 114 | 4 1/2 | 8.6 | 19 |
| | 600 | RF/RJ-37 | 194 | 7 5/8 | 79 | 3 1/8 | 89 | 3 1/2 | None | 114 | 4 1/2 | 10.0 | 22 |
| | 900 | RF/RJ-37 | 206 | 8 1/8 | 102 | 4 | 87 | 3 7/16 | None | 114 | 4 1/2 | 18.1 | 40 |
| | 1500 | RF/RJ-39 | 210 | 8 1/4 | 102 | 4 | 87 | 3 7/16 | None | 114 | 4 1/2 | 18.6 | 41 |
| | 2500 | RF/RJ-38 | 235 | 9 1/4 | 105 | 4 1/8 | 87 | 3 7/16 | None | 114 | 4 1/2 | 24.5 | 54 |



BEST AVAILABLE DOCUMENT

7

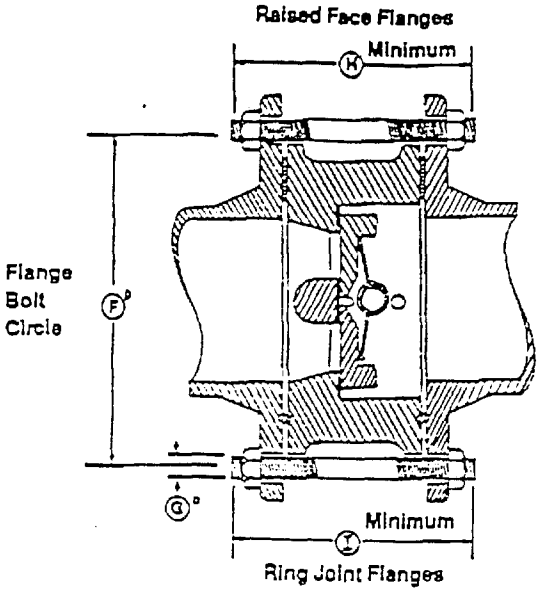


| SIZE | SERIES | F° mm | F° in | NUMBER OF STUDS | G° BOLT DIAMETER mm | G° BOLT DIAMETER in | STUD LENGTH H RAISED FACE mm | STUD LENGTH H RAISED FACE in | STUD LENGTH I RING JOINT mm | STUD LENGTH I RING JOINT in |
|---|---|---|---|---|---|---|---|---|---|---|
| 2" 50mm | 125 | 121 | 4¾ | 4 | 16 | ⅝ | 133 | 5¼ | — | — |
| | 150 | 121 | 4¾ | 4 | 16 | ⅝ | 152 | 6 | 165 | 6½ |
| | 250 | 127 | 5 | 8 | 16 | ⅝ | 146 | 5¾ | — | — |
| | 300 | 127 | 5 | 8 | 16 | ⅝ | 152 | 6 | 165 | 6½ |
| | 400-600 | 127 | 5 | 8 | 16 | ⅝ | 171 | 6¾ | 178 | 7 |
| | 900-1500 | 165 | 6½ | 8 | 22 | ⅞ | 222 | 8¾ | 222 | 8¾ |
| | 2500 | 171 | 6¾ | 8 | 25 | 1 | 254 | 10 | 254 | 10 |
| 2½" 65mm | 125 | 140 | 5½ | 4 | 16 | ⅝ | 146 | 5¾ | — | — |
| | 150 | 140 | 5½ | 4 | 16 | ⅝ | 165 | 6½ | 178 | 7 |
| | 250 | 149 | 5⅞ | 8 | 19 | ¾ | 171 | 6¾ | — | — |
| | 300 | 149 | 5⅞ | 8 | 19 | ¾ | 171 | 6¾ | 184 | 7¼ |
| | 400-600 | 149 | 5⅞ | 8 | 19 | ¾ | 191 | 7½ | 197 | 7¾ |
| 3" 80mm | 125 | 152 | 6 | 4 | 16 | ⅝ | 159 | 6¼ | — | — |
| | 150 | 152 | 6 | 4 | 16 | ⅝ | 171 | 6¾ | 184 | 7¼ |
| | 250 | 168 | 6⅝ | 8 | 19 | ¾ | 184 | 7¼ | — | — |
| | 300 | 168 | 6⅝ | 8 | 19 | ¾ | 184 | 7¼ | 197 | 7¾ |
| | 400-600 | 168 | 6⅝ | 8 | 19 | ¾ | 203 | 8 | 210 | 8¼ |
| | 900 | 191 | 7½ | 8 | 22 | ⅞ | 235 | 9¼ | 235 | 9¼ |
| | 1500 | 203 | 8 | 8 | 29 | 1⅛ | 267 | 10½ | 267 | 10½ |
| | 2500 | 220 | 9 | 8 | 32 | 1¼ | 311 | 12¼ | 318 | 12½ |
| 4" 100mm | 125 | 191 | 7½ | 8 | 16 | ⅝ | 165 | 6½ | — | — |
| | 150 | 191 | 7½ | 8 | 16 | ⅝ | 171 | 6¾ | 184 | 7¼ |
| | 250 | 200 | 7⅞ | 8 | 19 | ¾ | 191 | 7½ | — | — |
| | 300 | 200 | 7⅞ | 8 | 19 | ¾ | 191 | 7½ | 210 | 8¼ |
| | 400 | 200 | 7⅞ | 8 | 22 | ⅞ | 222 | 8¾ | 229 | 9 |
| | 600 | 216 | 8½ | 8 | 22 | ⅞ | 229 | 9 | 235 | 9¼ |
| | 900 | 235 | 9¼ | 8 | 29 | 1⅛ | 279 | 11 | 279 | 11 |
| | 1500 | 244 | 9½ | 8 | 32 | 1¼ | 305 | 12 | 305 | 12 |
| | 2500 | 273 | 10¾ | 8 | 38 | 1½ | 362 | 14¼ | 375 | 14¾ |



BEST AVAILABLE DOCUMENT

8

| SIZE | SERIES | TYPE FACING | A[D] | | B | | C[D] | | D | E[D] | | ESTIMATED WEIGHT | |
|---|---|---|---|---|---|---|---|---|---|---|---|---|---|
| | | | mm | in | mm | in | mm | in | | mm | in | Kg | Lb |
| 5" 125mm | 125 | PLAIN | 197 | 7¾ | 83 | 3¼ | 117 | 4⅝ | None | 141 | 5 9/16 | 10.0 | 22 |
| | 150 | RF/RJ-40 | 197 | 7¾ | 86 | 3⅜ | 117 | 4⅝ | None | 141 | 5 9/16 | 10.9 | 24 |
| | 250 | RF | 216 | 8½ | 83 | 3¼ | 117 | 4⅝ | None | 141 | 5 9/16 | 10.0 | 22 |
| | 300 | RF/RJ-41 | 216 | 8½ | 86 | 3⅜ | 117 | 4⅝ | None | 141 | 5 9/16 | 12.7 | 28 |
| 6" 150mm | 125 | PLAIN | 222 | 8¾ | 95 | 3¾ | 140 | 5½ | ½-13 | 168 | 6⅝ | 13.6 | 30 |
| | 150 | RF/RJ-43 | 222 | 8¾ | 98 | 3⅞ | 140 | 5½ | ½-13 | 168 | 6⅝ | 17.7 | 39 |
| | 250 | RF | 251 | 9⅞ | 95 | 3¾ | 140 | 5½ | ½-13 | 168 | 6⅝ | 13.6 | 30 |
| | 300 | RF/RJ-45 | 251 | 9⅞ | 98 | 3⅞ | 140 | 5½ | ½-13 | 168 | 6⅝ | 17.7 | 39 |
| | 400 | RF/RJ-45 | 248 | 9¾ | 137 | 5⅜ | 127 | 5 | ½-13 | 168 | 6⅝ | 27.7 | 61 |
| | 600 | RF/RJ-45 | 267 | 10½ | 137 | 5⅜ | 127 | 5 | ½-13 | 168 | 6⅝ | 30.8 | 68 |
| | 900 | RF/RJ-45 | 289 | 11⅜ | 159 | 6¼ | 132 | 5 3/16 | ½-13 | 168 | 6⅝ | 53.5 | 118 |
| | 1500 | RF/RJ-46 | 283 | 11⅛ | 159 | 6¼ | 132 | 5 3/16 | ½-13 | 168 | 6⅝ | 52.2 | 115 |
| | 2500 | RF/RJ-47 | 318 | 12½ | 159 | 6¼ | 132 | 5 3/16 | ½-13 | 168 | 6⅝ | 64.9 | 143 |
| 8" 200mm | 125 | PLAIN | 279 | 11 | 127 | 5 | 191 | 7½ | ½-13 | 219 | 8⅝ | 26.8 | 59 |
| | 150 | RF/RJ-48 | 279 | 11 | 127 | 5 | 191 | 7½ | ½-13 | 219 | 8⅝ | 25.9 | 57 |
| | 250 | RF | 308 | 12⅛ | 127 | 5 | 191 | 7½ | ½-13 | 219 | 8⅝ | 26.8 | 59 |
| | 300 | RF/RJ-49 | 308 | 12⅛ | 127 | 5 | 191 | 7½ | ½-13 | 219 | 8⅝ | 34.9 | 77 |
| | 400 | RF/RJ-49 | 305 | 12 | 165 | 6½ | 178 | 7 | ½-13 | 219 | 8⅝ | 51.7 | 114 |
| | 600 | RF/RJ-49 | 321 | 12¾ | 165 | 6½ | 178 | 7 | ½-13 | 219 | 8⅝ | 55.8 | 123 |
| | 900 | RF/RJ-49 | 359 | 14⅛ | 206 | 8⅛ | 173 | 6 13/16 | ½-13 | 216 | 8½ | 107.0 | 236 |
| | 1500 | RF/RJ-50 | 352 | 13⅞ | 206 | 8⅛ | 173 | 6 13/16 | ½-13 | 216 | 8½ | 105.2 | 232 |
| | 2500 | RF/RJ-51 | 387 | 15¼ | 206 | 8⅛ | 173 | 6 13/16 | ½-13 | 216 | 8½ | 127.0 | 280 |
| 10" 250mm | 125 | PLAIN | 340 | 13⅜ | 140 | 5½ | 243 | 9 7/16 | ⅝-11 | 273 | 10¾ | 42.6 | 94 |
| | 150 | RF/RJ-52 | 340 | 13⅜ | 146 | 5¾ | 243 | 9 7/16 | ⅝-11 | 273 | 10¾ | 43.5 | 96 |
| | 250 | RF | 362 | 14¼ | 140 | 5½ | 243 | 9 7/16 | ⅝-11 | 273 | 10¾ | 42.6 | 94 |
| | 300 | RF/RJ-53 | 362 | 14¼ | 146 | 5¾ | 243 | 9 7/16 | ⅝-11 | 273 | 10¾ | 53.5 | 118 |
| | 400 | RF/RJ-53 | 359 | 14⅛ | 213 | 8⅜ | 213 | 8⅜ | ⅝-11 | 273 | 10¾ | 89.4 | 197 |
| | 600 | RF/RJ-53 | 400 | 15¾ | 213 | 8⅜ | 213 | 8⅜ | ⅝-11 | 273 | 10¾ | 105.7 | 233 |
| | 900 | RF/RJ-53 | 435 | 17⅛ | 241 | 9½ | 216 | 8½ | ⅝-11 | 270 | 10⅝ | 195.0 | 430 |
| | 1500 | RF/RJ-54 | 435 | 17⅛ | 248 | 9¾ | 216 | 8½ | ⅝-11 | 270 | 10⅝ | 199.6 | 440 |
| | 2500 | RF/RJ-55 | 476 | 18¾ | 254 | 10 | 216 | 8½ | ⅝-11 | 270 | 10⅝ | 217.7 | 480 |
| 12" 300mm | 125 | PLAIN | 410 | 16⅛ | 181 | 7⅛ | 289 | 11⅜ | ¾-10 | 324 | 12¾ | 70.8 | 156 |
| | 150 | RF/RJ-56 | 410 | 16⅛ | 181 | 7⅛ | 289 | 11⅜ | ¾-10 | 324 | 12¾ | 73.9 | 153 |
| | 250 | RF | 422 | 16⅝ | 181 | 7⅛ | 289 | 11⅜ | ¾-10 | 324 | 12¾ | 70.8 | 156 |
| | 300 | RF/RJ-57 | 422 | 16⅝ | 181 | 7⅛ | 289 | 11⅜ | ¾-10 | 324 | 12¾ | 86.2 | 190 |
| | 400 | RF/RJ-57 | 419 | 16½ | 229 | 9 | 279 | 11 | ¾-10 | 324 | 12¾ | 128.3 | 284 |
| | 600 | RF/RJ-57 | 457 | 18 | 229 | 9 | 279 | 11 | ¾-10 | 324 | 12¾ | 141.5 | 312 |
| | 900 | RF/RJ-57 | 498 | 19⅝ | 292 | 11½ | 267 | 10½ | ¾-10 | 324 | 12¾ | 345.6 | 762 |
| | 1500 | RF/RJ-58 | 521 | 20½ | 305 | 12 | 254 | 10 | ¾-10 | 324 | 12¾ | 370.6 | 817 |
| | 2500 | RF/RJ-60 | 549 | 21⅝ | 305 | 12 | 254 | 10 | ¾-10 | 324 | 12¾ | 390.0 | 860 |



BEST AVAILABLE DOCUMENT

9

# AWWA IN-PLANT RUBBER SEAT BUTTERFLY VALVES

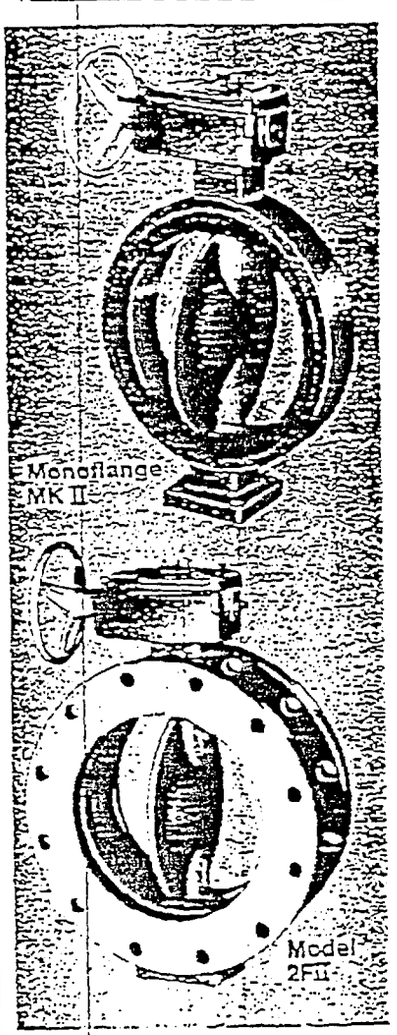


Technical Data

**Sizes:**
3" through 20"

**Body Style:**
Cast iron and steel standard. (Other materials available upon application.) Rubber seat on wafer-type Monoflange MKII valves extends over inner surface plus outside face of body to form self-gasketing feature. Flanges on Model 2FII valves are flat faced and drilled in accordance with ANSI B16.1, Class 125, standards.

**Pressure Class:**
Class 150B per AWWA Standard C504

**Working Pressure:**
150 psi

**Service:**
Municipal/Industrial applications for controlling various liquids and gases.

**Operators:**
Pratt hand levers, Pratt MDT with nut, chainwheel or handwheel; Pratt cylinder operators for air, oil or water with and without manual override; Pratt Positron electric motor operators.

**Maximum Operator Input Capability:**
200 lb. pull on handwheel or chainwheel

**Accessories:**
Floorstands, extension bonnets, positioners, locking devices, remote control and/or indication devices, automatic control equipment, Positac servo-amplifier positioning system.

## The standards of reliability

The Pratt AWWA rubber-seat butterfly valves have been specifically designed to withstand the rigors of various water works, power plant and general industrial applications where high quality, long-lasting valves are essential. Their components have been designed and tested to assure reliable and dependable valving performance in the most demanding applications.

## Longer life, greater dependability

The patented bonded seat design developed for these valves produces a reliable, bubble tight closure over a design life exceeding 10,000 cycles at full working pressure. All other valve components—shafts, discs, bearings, packing—are engineered for the same long, trouble-free service with minimum maintenance attention.

## Trouble Free, Maintenance Free Body-Seat

The specially compounded BUNA N rubber seat is bonded by a patented process to the valve body. It has been engineered so that under normal operating conditions no replacement or adjustment is required throughout the life of the valve. This method of seat retention affords more precise control of circumferential tolerances to assure bubble-tight valve performance through thousands of operational cycles in severe service. This method, unlike boot type rubber seats, assures that "ballooning" of the seat, with the effect of either locking the disc in place or causing the seat to "blow out," is completely eliminated.

## Full AWWA Conformance

Henry Pratt engineers have been actively involved with the American Water Works Association in the development of AWWA Specifications for butterfly valves. They have contributed in the areas of shaft materials and diameters, seat thickness and composition, seat retention methods, bearings, shaft seals and operator output torques. Both the Monoflange® MKII (wafer-type) and Model 2FII (double-flanged) valves have been engineered to fully conform with AWWA Standard C504 for Class 150B.

When the user specifies that his butterfly valves must fully conform to AWWA Standard C504 he is assured of a quality valve produced from tested materials according to designs that are *known* to work.

## The tested bond

To assure a thoroughly reliable valve seat, the Pratt rubber seat bond is tested by the ASTM Test No. D-429, Method B. This test, one of the most stringent means of measuring bond effectiveness, consists of a minimum 75-pound pull on a 1" strip line at 90° to the sample. Repeated testing confirms the integrity of the rubber seat bond at over 100 pounds pull. When pushed to failure, the rubber normally ruptures rather than separating from its metal base.

The effect of this and a range of other materials and structural tests confirms the stability and dependability of Pratt valves in a wide variety of applications while reinforcing the confidence with which they are specified and applied throughout industry.

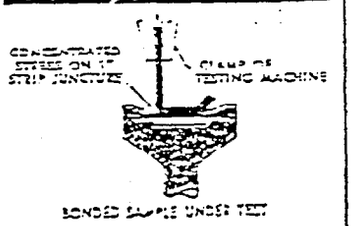




BEST AVAILABLE DOCUMENT

10

# DESIGN DETAILS

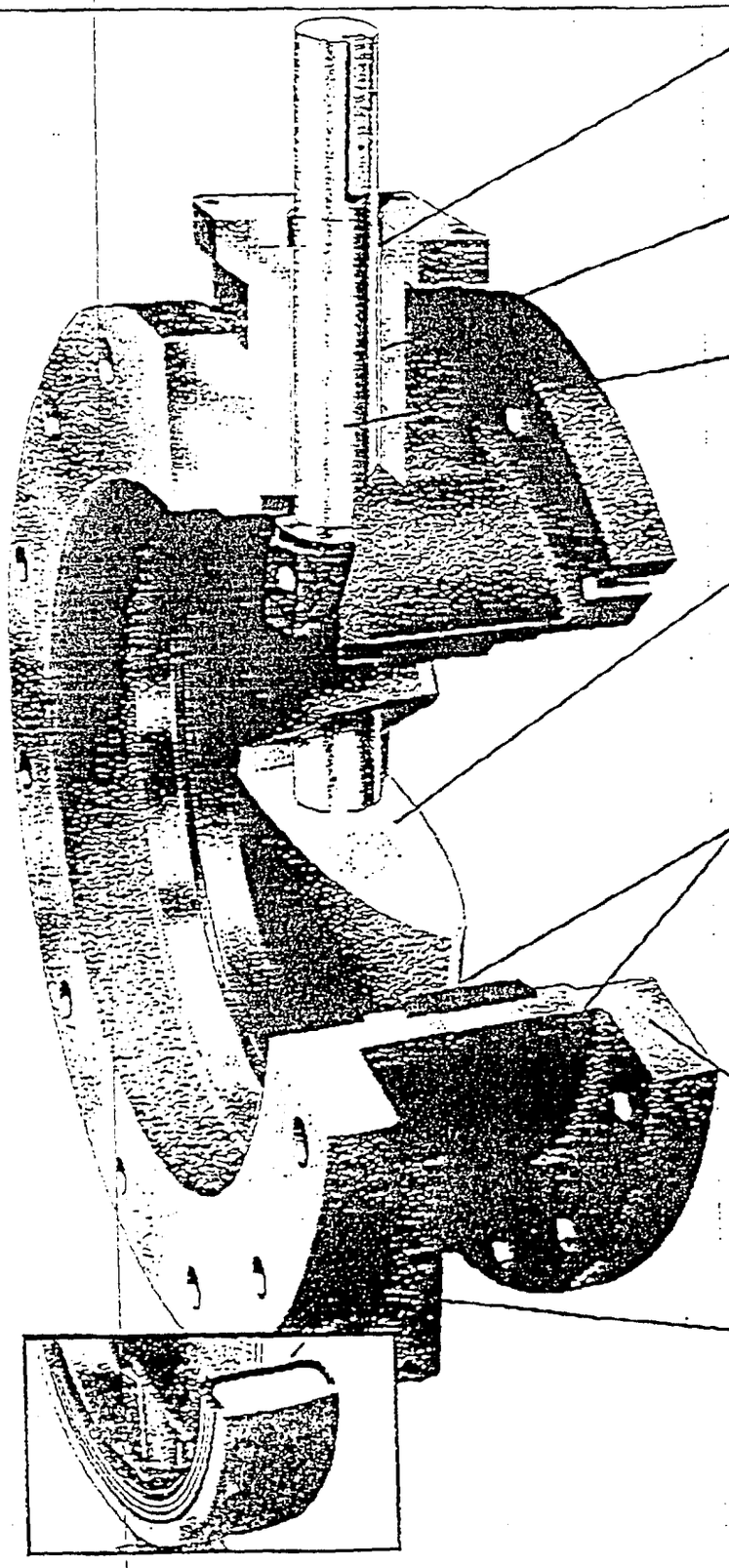

### Self Adjusting Permanent Packing

Chevron type packing increases sealing force as line pressure increases. This self-adjusting feature assures long life. Packing bears on turned, ground and polished stainless steel, reducing wear to a minimum. Accessible for replacement without dismantling valve per AWWA Standard C504.

### Lifetime Bearings

Chemically inert nylon bearings, liberally sized to meet or exceed AWWA Specification pressure loads. They are self-lubricating, and require no periodic maintenance. They are designed to outlast the life of the pipeline.

### Corrosion Resistant Shafts

To prevent corrosion of a vital structural component, shafts are constructed of centerless ground 18-8 type 304 or type 316 stainless steel bar—not carbon steel or similar materials that afford no protection whatsoever against harmful effects of corrosion. Shafts are one-piece, through-shaft construction, sized to meet or exceed requirements of AWWA Standard C504 for Class 150B.

### Streamlined Discs

Lens-shaped discs are designed to minimize pressure drop and turbulence. Full open valve creates no more friction loss than a 45° elbow. Discs are secured to shafts by stainless steel pins sized to transmit torques required and withstand stresses imposed under various operating conditions. Disc materials available include cast iron with Ni-Chrome edge as standard. Ni-Resist, bronze, stainless steel or ductile iron with Ni-Chrome edge.

### Body Seat

Seats are produced from a special rubber compounded in the Henry Pratt materials laboratory. Skilled technicians bond seats to the body by an exclusive patented process using special machinery. The result is a seat that cannot be torn from the body. The precision molding process also insures that the disc-seat interference cannot cause excessive wear or abrasion in normal operation. On wafer-type Monoflange bodies, the rubber seat covers entire inner surface plus the outside face of the valve body to provide a self-gasketing feature.

### Heavy Duty Bodies

Both Monoflange MGI and Model 2FII bodies are heavy-duty cast iron or steel. Model 2FII flanges are fully faced and drilled in accordance with ANSI B16.1 Standard for cast iron flanges. Monoflange bodies incorporate an overlapping seat which also forms a gasket for the flange face. Operator mounting trunnion is machined and drilled for four-bolt connection.

### Tamper-Proof Disc Centering

Precision molded flats in the bonded seat at the body trunnion mate with machined flats on the disc to provide tamper-proof centering of the disc in the body. Positive disc alignment without play is maintained indefinitely assuring long seat life.

Note:
Bottom cover plate varies slightly from that shown for 2" through 8" valves.



BEST AVAILABLE DOCUMENT

# MANUAL OPERATORS

## Rugged, Feature Packed Construction

Designed and built for butterfly valves, Pratt MDT manual operators meet or exceed the requirements of AWWA Standard C504. They are traveling nut type and self locking.

Unlike other designs, Pratt MDT operators reliably maintain exact valve position despite conditions of fluctuating, turbulent and intermittent flow while still affording easy, smooth operation by one person. They are designed to produce the specified torque with a maximum pull of 80 pounds on the handwheel or chainwheel and a maximum input of 150 pounds on operating nut. Stop limiting devices are provided.

Operator sizes MDT-1 and MDT-2 are virtually linear in action with valve opening approximately in proportion to turns of the nut. In larger sizes, a link-lever system slows valve travel as the valve approaches the closed position, thus minimizing the possibility of line shock.

## Operator Mounting Positions

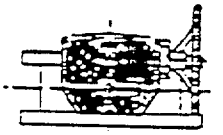

POSITION 1
STANDARD POSITION

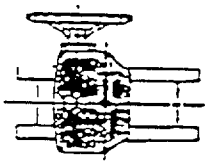

POSITION 2

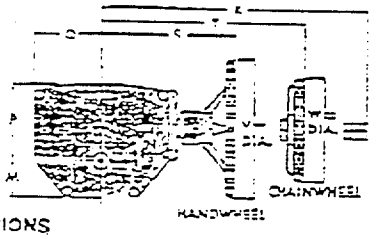


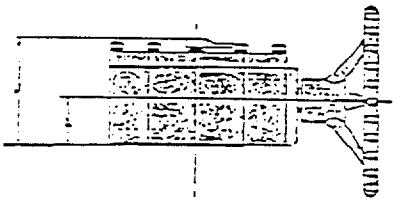

DIMENSIONS

| Valve Size | Operator Size | J | L | M | N | P | Q | R | S | T | V | W | No. Turns Operate To Close |
|---|---|---|---|---|---|---|---|---|---|---|---|---|---|
| 3" to 6" | MDT-1 | 4½ | 2 1/16 | 1¼ | 1½ | 3¼ | 3⅝ | 5 13/16 | 7⅛ | 7¾ | 8 | 9⅛ | 27 |
| 10", 12" | MDT-2 | 4⅞ | 2 | 2⅛ | 2 | 4½ | 4⅛ | 8¼ | 7⅞ | 7⅞ | 8 | 9⅛ | 32 |
| 14", 16" | MDT-3 | 7¼ | 4 1/16 | 3¼ | 3 5/32 | 5⅝ | 5 7/16 | 10 3/16 | 10½ | 10 | 12 | 9⅛ | 30 |
| 18", 20" | MDT-4 | 8 | 4½ | 3⅝ | 4 | 7 3/16 | 6¾ | 11 5/16 | 11¼ | 11 | 12 | 9⅛ | 40 |

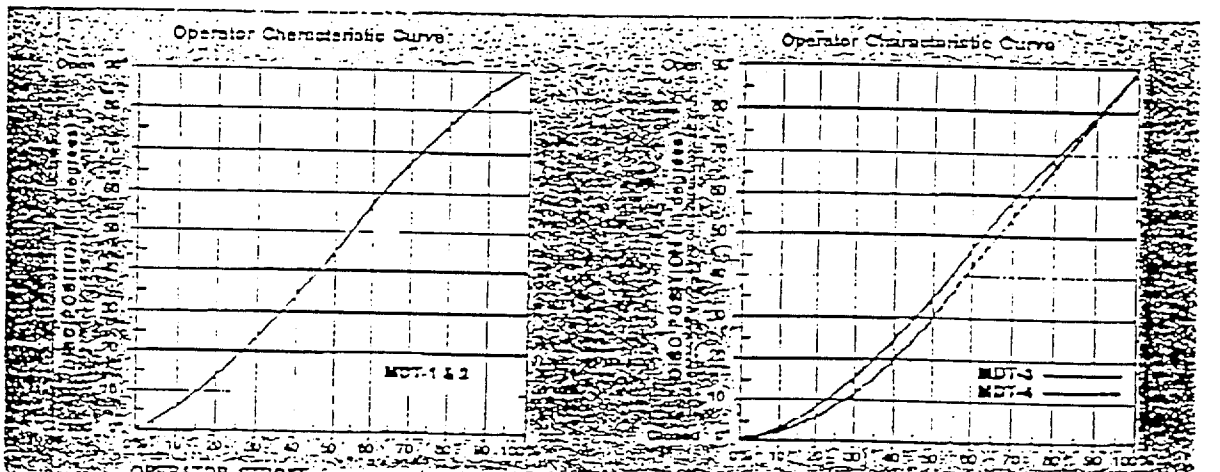


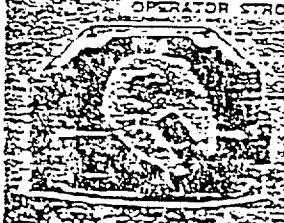

MDT-1 and MDT-2 operators feature slotted lever design with internal stops and adjustments. These rugged operators mount perfectly on Pratt [illegible] valves, [illegible] and operator performance.

MDT-3 and MDT-4 operators feature link-lever arrangement with characterized [illegible] to minimize the possibility of line shock or water hammer [illegible] damage piping and valves.



BEST AVAILABLE DOCUMENT

12

**PRATT**

# MODEL 2FII BUTTERFLY VALVE HANDLEVER ACTUATOR

DRAWING NO. **MC-6184**

Rev. #2 10/92

| Valve Size | A | B | C | D* | E | F | G | K |
|---|---|---|---|---|---|---|---|---|
| 3 | 4-¾ | 3-½ | 7-½ | 5 | ¾ | 4—¾ | 6 | L-12 |
| 4 | 5-½ | 3-½ | 9 | 5 | 15/16 | 8—¾ | 7-½ | L-12 |
| 6 | 6-½ | 5-¼ | 11 | 5 | 1 | 8—¾ | 9-½ | L-12 |
| 8 | 7-¾ | 6-½ | 13-½ | 6 | 1-⅛ | 8—¾ | 11-¾ | L-18 |
| 10 | 9 | 9-⅞ | 16 | 8 | 1-15/16 | 12—⅞ | 14-¼ | L-18 |

| HANDLEVER ACTUATOR TABLE | |
|---|---|
| Act. Model | K |
| L-12 | 12-½ |
| L-18 | 18-¾ |

NOTES:

1. All dimensions shown in inches.
2. Operator mounted to position shown.
3. Paint: Interior of valve (except flange faces): Tnemec Series 20 Pota-Pox 9 mils

   Exterior of valve & actuator: Tnemec Chem Prime Epoxy Primer 6 mils

   *D = 15/16" for 3" thru 10" valve.
4. Valves conform to AWWA C504 latest revision class 150B.

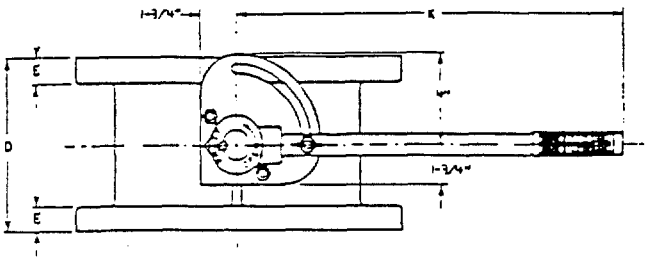


PS =1

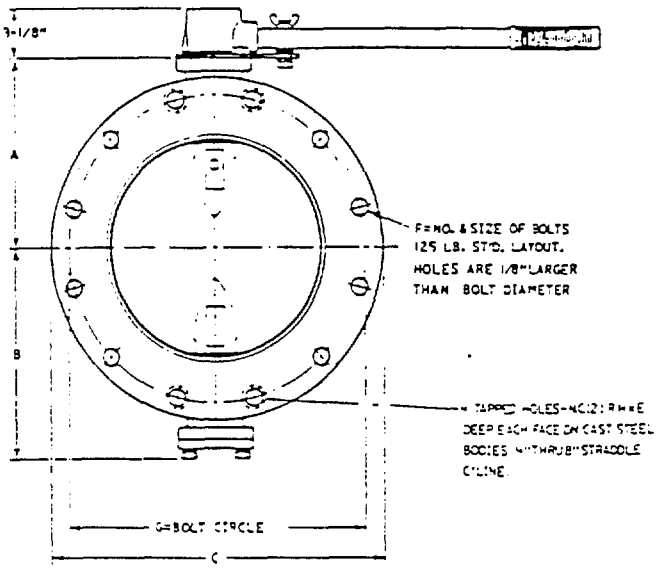


| Item No. | Qty. | Valve Size (In.) |
|---|---|---|
| | 3 | 4 |
| | 3 | 6 |
| | | |
| | | |
| | | |

## Material Code Table

| Part | Material |
|---|---|
| Body: | Cast Iron ASTM A-126, Class B |
| Disc: | Cast Iron ASTM A-126, Class B with 316 Edge |
| Shaft: | Stainless Steel 18-8 Type 304 ASTM A-276 |
| Bearings: | Nylon |
| Seat: | Buna-N |

Customer: CH2M HILL

P.O. No.: INT 10459

Project:

Engineer:

Pratt Order No.: 22001

Proposal No.: N01F-5013

Customer Approval (Stamp in Box)

Date:

Pratt Approval (by):

Date:

Henry Pratt Co., Aurora, IL 60507 U.S.A.



BEST AVAILABLE DOCUMENT

13

**PRATT**

# MODEL 2FII BUTTERFLY VALVE
# MDT MANUAL ACTUATOR

DRAWING NO.
**MC-6194**
Rev. #2 10/92

| Valve Size | A | B | C | D* | E | F | G |
|---|---|---|---|---|---|---|---|
| 3 | 4-¾ | 3-½ | 7-½ | 5 | ¾ | 4-¼ | 6 |
| 4 | 5-½ | 3-½ | 9 | 5 | 15/16 | 8-¼ | 7-½ |
| 6 | 6-½ | 5-½ | 11 | 5 | 1 | 8-¾ | 9-½ |
| 8 | 7-¾ | 6-½ | 13-½ | 6 | 1-⅛ | 8-¾ | 11-¾ |
| 10 | 9 | 9-½ | 16 | 8 | 1-3/16 | 12-½ | 14-¼ |
| 12 | 10-½ | 11-¾ | 19 | 8 | 1-¼ | 12-½ | 17 |
| 14 | 11-¾ | 12-¾ | 21 | 8 | 1-⅜ | 12-1 | 18-¾ |
| 16 | 13-½ | 14-½ | 23-½ | 8 | 1-7/16 | 16-1 | 21-¼ |
| 18 | 14-¾ | 15-¾ | 25 | 8 | 1-9/16 | 16-1-¼ | 22-¾ |
| 20 | 16 | 17 | 27-½ | 8 | 1-11/16 | 20-1-½ | 25 |

**MDT ACTUATOR TABLE**

| Act. Size | J | K | L | M | N | P | Q | R | S | T | V | W |
|---|---|---|---|---|---|---|---|---|---|---|---|---|
| MDT-1SM | 4-¾ | 4-¼ | 2-½ | 2-¼ | 1-½ | 3-¾ | 3-½ | 7 | 7-¾ | 8-¾ | 8 | 9-½ |
| MDT-2S | 4-1/16 | 4-¾ | 2 | 2-½ | 2 | 4-½ | 4-½ | 8-½ | 7-¾ | 9-3/16 | 8 | 9-½ |
| MDT-3S | 5-¾ | 5-3/16 | 2-7/16 | 3-¼ | 3-3/16 | 5-¾ | 5-7/16 | 10-3/16 | 10-¾ | 9-13/16 | 12 | 9-½ |
| MDT-4S | 6-¾ | 6 | 2-½ | 3-¾ | 4 | 7-3/16 | 6-¾ | 11-3/16 | 11-½ | 11-½ | 12 | 9-½ |

NOTES:

1. All dimensions shown in inches.
2. Paint: Interior of valve (except flange faces): Tnemec Series 20 Pota-Pox 9 mils
   Exterior of valve & actuator: Tnemec Chem Prime Epoxy Primer 6 mils
   *D ± 1/16" for 3" thru 10" valves. *D ± ⅛" for 12" & larger valves.
3. Valves conform to AWWA C504 latest revision class 150B.

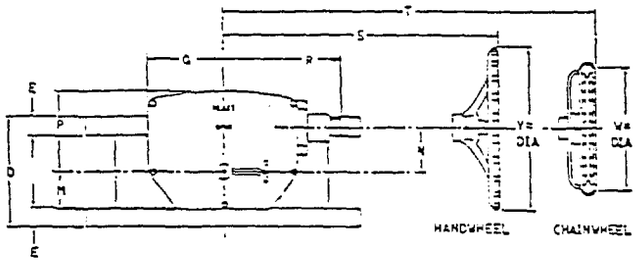


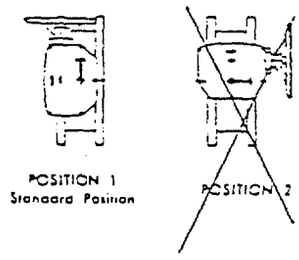


PS =1

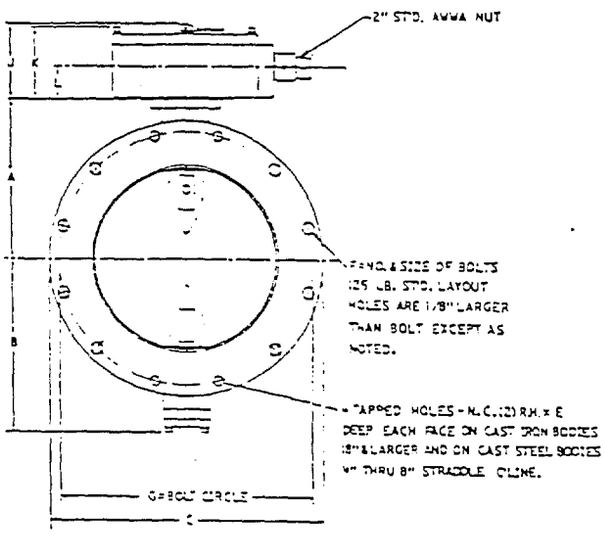


| Item No. | Qty. | Valve Size (In.) | Act. Size | Hand Wheel | Chain Wheel | AWWA Nut | Act. Pos. | Act. Rotation Open Left | Act. Rotation Open Right |
|---|---|---|---|---|---|---|---|---|---|
| | 2 | 20 | 4S | X | | | | | |
| | 6 | 12 | 2S | X | | | | | |
| | | | | | | | | | |
| | | | | | | | | | |
| | | | | | | | | | |

## Material Code Table

| Part | Material |
|---|---|
| Body: | Cast Iron ASTM A-126 Class B |
| Disc: | Cast Iron ASTM A-126 Class B, with 316 Edge |
| Shaft: | Stainless Steel ASTM A276 Type 304 |
| Bearings: | Nylon |
| Seat: | Buna-N Rubber |

Customer: CH2M Hill

P.O. No.: INT 10459

Project:

Engineer:

Pratt Order No.: 22001

Proposal No: 1M01F-5013

**Customer Approval (Stamp in Box)**

Date:

Pratt Approval (by):

Date:

Henry Pratt Co., Aurora IL 60507 U.S.A.



BEST AVAILABLE DOCUMENT

14

SERIES 100 METERS AND ACCESSORIES

# DIRECT DRIVE TUBE AND SADDLE TYPE METERS

IDS-115
Issue date Oct 88
Supersedes Form 565 & Bulletin 212 of May 1970

## DESCRIPTION

The first requisite for handling a water works job efficiently is to know how much water is flowing through the line and within what flow range. The Sparling Direct Drive Meter provides this information with a high degree of accuracy and long-term reliability.

## PRINCIPLE OF OPERATION

Sparling Meters, of the propeller type, utilize the simple principle of the screw propeller to register the total flow, much as an odometer registers automobile travel. Gears and a register convert the revolutions of the propeller to cubic feet, gallons or other standard volumetric units.

The rotation of the propeller shaft also affords a basis for indicating and recording gallons per minute or other rates, corresponding to miles per hour on a speedometer.

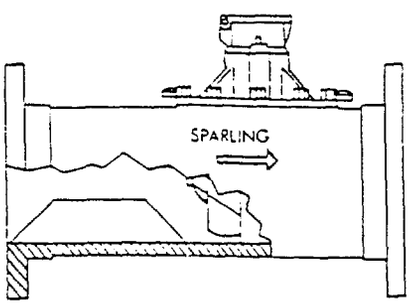


## EXAMINE YOUR METER BEFORE INSTALLING

You will notice that the meter has two principal parts (1) the WORKING MECHANISM mounted on a head plate. (2) the TUBE – or saddle – for mounting the mechanism in the line.

If it is a tube meter, as shown above, look inside the tube and note how the propeller is positioned to face the flow through the line.

Notice the corrosion resistant lining of the tube. This liner is of accurate cross section area, the first requirement for accurate measurement.

The straightening vanes, in meters 4-inches and over, extend into the tube to direct a straight flow to the propeller.

Now spin the propeller with the fingers. Note how freely it turns and how its rotation advances the figures on the register. Next, hold the propeller with the fingers and rock the propeller from side to side.

KEEP IN MIND THE AMOUNT OF PLAY YOU FIND. This play is correct and will enable you to judge in future annual inspections if the bearing under the propeller has become worn and is ready for replacement.

For a general knowledge of the moving parts of the mechanism, turn to page 4. Note how the rotations of the propeller are carried through shafts on ball bearings. Also how these shafts are geared to actuate the totalizer on the meterhead.

## INSTALLATION – TUBE TYPE METERS

Install the tube meter in the line just as though it were a short length of pipe.

The propeller must face the on-coming flow and, in proper position, arrows on the meter tube and head plate will point in the direction of the flow.

Choose a location that assures a full pipe of water flowing at or above the minimum velocity specified for the meter, with no contractions or obstructions ahead that would produce a jet or spiralling flow into the meter. At least ten diameters of stright pipe upstream and one diameter downstream is recommended.

BEST AVAILABLE DOCUMENT

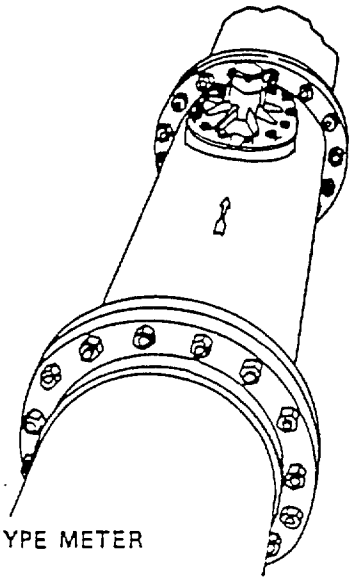

TUBE TYPE METER

A jet caused by a partially opened valve, a centrifugal pump, or a pipe contraction a short distance upstream from the meter may cause inaccurate readings.

Disturbances can be avoided by locating the meter on the suction side of the pump; the meter will register just as accurately as on the discharge side. The meters operate just as efficiently on a vertical or slanting pipe as on a horizontal line. The straightening vanes take care of normal twists in the flow of water.

## INSTALLATION – SADDLE TYPE METERS

For welding to steel or wrought-iron pipe, place the saddle on the pipe and scribe a line INSIDE the saddle. Cut or burn a full opening in the pipe so there will be no projections of the pipe beyond the straight inside edge of the saddle. Smooth the pipe around the opening to make a good surface for the saddle.

Cast steel saddles are supplied for welding on Steel, Ductile Iron or Wrought-Iron pipe and should be tacked first, then welded in place, taking care not to overheat any part of the saddle.

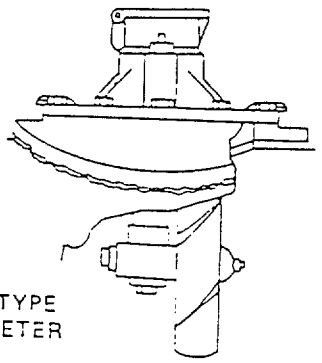

WELDING TYPE SADDLE METER

## INSTALLATION – TYPE 182 METERS

Type 182 saddle type meters are for installation in steel or steel cylinder concrete pipe. If the proper size riser is existing, proceed to page 3. If the riser must be installed, proceed as shown below:

STEP 1 (Fig. 1)
Place riser (1) on pipe scribe around outside of riser as shown. Cut hole.

STEP 2 (Fig. 2)
Insert riser (1) into hole in skirt plate (2) do not weld at this point. Pull skirt plate (2) up against flange of riser (1).

STEP 3 (Fig. 2)
Insert riser (1) into cutout in pipe. Make sure bottom edge of riser is flush with I.D. of pipe and holes in flange are straddling the center line of pipe. Weld riser to inside pipe as shown.

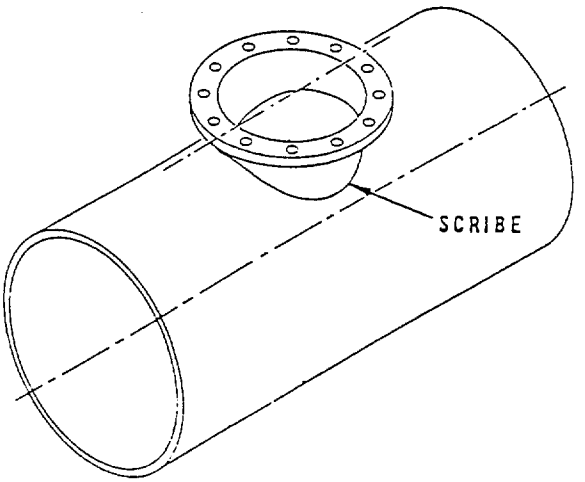


FIG. 1

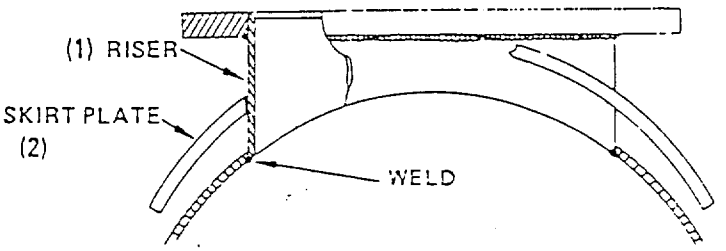


FIG. 2

 BEST AVAILABLE DOCUMENT 16

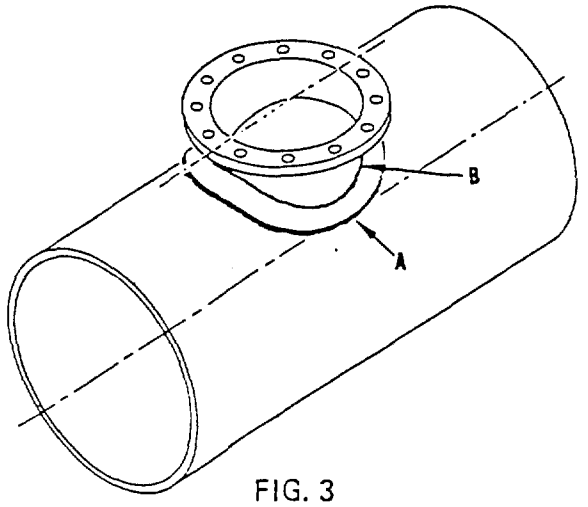


FIG. 3

STEP 4 (Fig. 3)
Lower skirt plate (2) down onto pipe. Position to achieve conformity with O.D. of pipe. Weld in a continuous bead at point "A" and point "B".

## INSTALLATION – SADDLE TYPE METERS

Install straightening vanes as instructed on Fig. 5, Table 1.

Place gasket on face of saddle and install meterhead, as follows: (See figure A)

6-INCH and 8-INCH Meters – Hold meterhead with propeller facing UPSTREAM. Lower propeller into pipe and slide it upstream to position for capscrews and secure headplate.

10-INCH and OVER – Hold meterhead over opening with propeller toward you and blades lengthwise with the pipe. Tilt headplate toward you. Lower until one blade lies horizontally ON the end of the saddle, as in Figure A, then ease the propeller down through the saddle with a "rolling" motion. Now turn headplate so that the propeller faces upstream. The arrow on the plate points in the direction of the flow. Insert capscrews, tighten them evenly, and meter is ready to operate.

FIGURE A

## INSTALLING STRAIGHTENING VANES

Usually 3 vanes are used, equally spaced radially (Fig. 1) and parallel with the longitudinal axis of the pipe (Fig. 2) and located at not less than the distance indicated in Table 1 corresponding to size meter being installed (Ref. dimension "A" Fig. 3); dimension given is measured from the edge of the saddle opening to tip of straightening vane.

For easy vane installation, place each vane in its equivalent position on the outside of the pipe and mark the location for bolt holes (Fig. 4) and drill through.

Install vanes inside the pipe. Place lead washers and then steel washer on bolts on outside of pipe and tighten nuts securely (Fig. 5).

NOTE: On installation where both forward and reverse flows are to be measured, install additional vanes on the down stream side of the meter in the same manner and located the same distance from the edge of saddle opening as already specified for the upstream side.

TABLE 1

| SIZE METER | 6 | 8 | 10 | 12 | 14 | 16 | 18 | 20 | 24 | 30 | 36 | 42 | 48 | 54 | 60 | 66 | 72 |
|---|---|---|---|---|---|---|---|---|---|---|---|---|---|---|---|---|---|
| DIMENSION "A" | 4 | 4 | 4 | 4 | 4 | 8 | 8 | 8 | 8 | 8 | 12 | 12 | 15 | 15 | 15 | 15 | 15 |

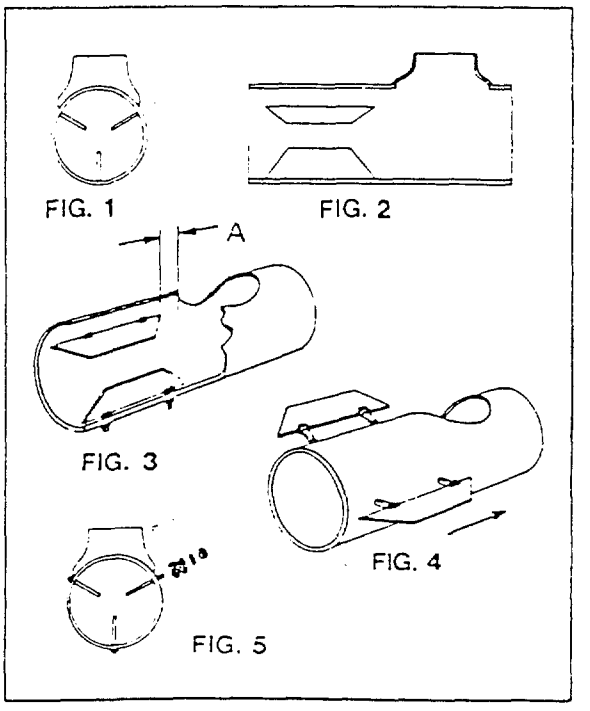




BEST AVAILABLE DOCUMENT

17

## MAINTENANCE

With the meter installed and in operation, the totalizer will be your main concern. In meters of the 2-inch, 3-inch and 4-inch sizes, it is seldom necessary to add grease.

In meters 6-inch and over, a grease fitting (54) is furnished in the headplate and such meters may be lubricated ONCE A MONTH, to replace grease that has worked out in operation.

The amount of grease depends on how much the meter is in use. The operator will be guided accordingly, when using a force feed gun.

Over-lubrication tends to drag on the moving parts and may cause the meter to under-register. Do not overgrease the meter.

Lubricate only with Lubriplate grease available from Sparling.

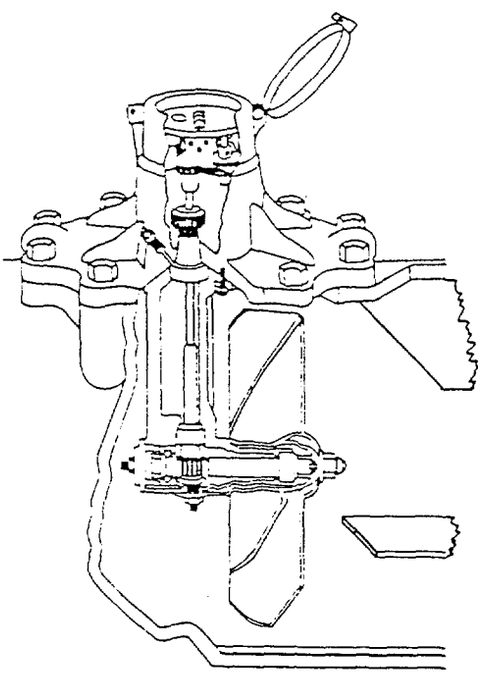

## INSPECTION

It's good practice to take the meterhead out of the line ONCE A YEAR. Check the mechanism, note condition of tube (or pipe, in the case of saddle meters), and of straightening vanes.

## WITHDRAWING METERHEAD

Remove cap screws and ease head-plate off the tube or saddle. Pry up the lugs if necessary.

METERS 2-inch to 8-inch – slide meterhead in "downstream" direction; lift "downstream" end of meterhead, as shown below, and draw propeller from the pipe carefully.

METERS 10-inch and over – turn meterhead counter-clockwise for a quarter turn. Tilt top toward you. Lift so a blade of the propeller slides horizontally over the end of the saddle, as shown below, and ease the propeller out with a "rolling" motion. Remove the register cover and clock from the meterhead.

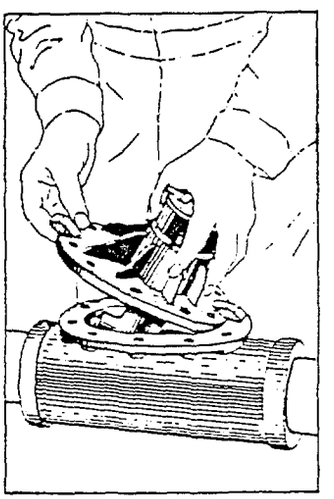

2" – 8" METERS

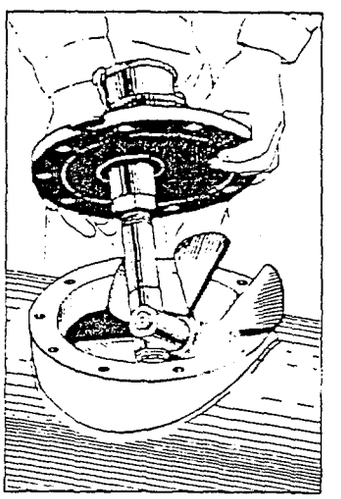

10" & LARGER

## EXAMINING METERHEAD

Spin the propeller with the fingers. If the propeller spins freely, hold the drive gear (28) on top of the vertical shaft with the fingers. Rotate the propeller again. If the worm (47) is good, the drive gear will turn despite being held.

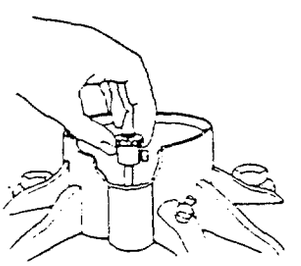

WORM TEST



BEST AVAILABLE DOCUMENT

18

Next, rock the propeller with the fingers. The propeller should have a little freedom of movement due to the designed play in the bearings, so that grit will pass.

Don't worry if the rotating assembly has a slight looseness. 1/32" is normal. See that the propeller blades are smooth and clean.

Examine the pipe for any foreign matter that may have accumulated. Look at the upstream ends of the straightening vanes and remove accumulated matter. See if the vanes have been damaged, and straighten any bends.

Replace the clock and register cover as instructed on page 6 and return the meterhead to the line.

## REPLACEMENTS

If your meterhead does not pass these tests, it should be taken apart, cleaned, and necessary replacement parts should be ordered.

The front bearing (42) is the key to the life of the meter. If it is kept in proper condition, the other parts last almost indefinitely. If the "play" on the front bearing becomes excessive, there may be unnecessary wear on the worm (47) and other working parts.

Keep spare bearings available.

## PACKING ASSEMBLY

If a leak develops in the Packing Assembly (49), it should be replaced. Only the Sparling factory furnishes spare parts to original factory specifications. Call 800/423-4986 toll free (in California, 818/444-0571) for replacement parts.

## REPLACING PACKING ASSEMBLY

(1) Shut off the line so there is no pressure against the packing assembly.
(2) Remove the register box and clock from the meterhead to expose drive gear (28) and packing nut (50).
(3) Loosen set screw holding drive gear (28).
(4) Remove drive gear and packing nut. CAUTION: a) Packing nut has a left hand thread — turn clockwise to remove. b) Be careful not to bend vertical shaft (41) when removing drive gear.
(5) Remove packing assembly by lifting it straight up off of vertical shaft.
(6) If vertical shaft shows evidence of scoring or grooves, replace completely.

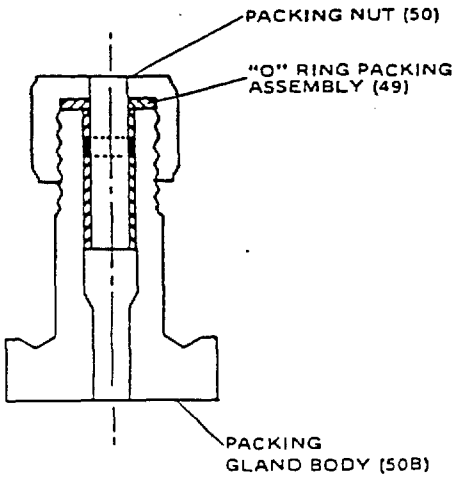


(7) Install new packing assembly and replace packing nut by turning counter-clockwise and seating firmly.
(8) Replace and secure drive gear (28) as described below.

## RE-INSTALLING REGISTER

(1) Place drive gear (28) on the vertical shaft (41) and tighten set-screw on flat face of shaft so that top face of gear is 1/16" below level of meterhead recess.
(2) Place drive gear (29) as far as it will go on spindle of the register clock. Tighten set-screw over flat face of spindle. Be sure clock turns freely.
(3) Fit bottom of clock in recess of meterhead so that gears (28) and (29) are approximately in the position below.
(4) Turn clock so that the gears mesh snugly, as at A, then back off just a trifle, as at B.
(5) Check this slight play by jiggling the gear train in the register, to make sure that the gears are in mesh but do not bind.
(6) Replace register cover over the clock and secure with screws. Be sure the bottom of the clock has not slipped out of the recess in meterhead.

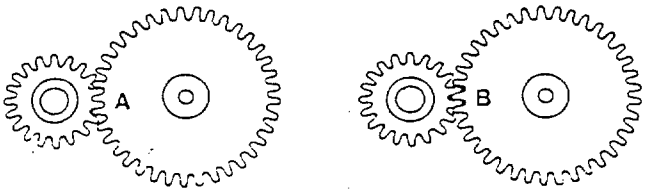


BEST AVAILABLE DOCUMENT



19

## DISASSEMBLE METERHEAD

(1) Loosen screws and take off the register cover and clock.
(2) Loosen set-screw on drive gear (28) on vertical shaft, and remove gear.
(3) Hold propeller firmly and take off propeller nut (39) and washer. Pull off propeller from the shaft, tapping the adjacent end of shaft if necessary to loosen the propeller's hold.
(4) Lift out the Woodruff Key (45C).
(5) Remove vertical shaft plug (56) and pull out the vertical shaft (41) with gear.
(6) Remove propeller shaft plug (46) and take out the propeller shaft (40), tapping on the propeller end of the shaft (39) if necessary, to start it.
(7) Remove front bearing (42) by pressing it out from the rear of the gear box.
(8) Remove screws and take off gear box (30).
(9) Pull or tap out the vertical shaft bearing (44).

## CLEANING PARTS

Thoroughly clean all parts — EXCEPT PROPELLER — with solvent. Wipe clean and examine for wear. Clean the propeller so the blades offer smooth surfaces to the flow. If blades are broken or damaged, replace with new propeller.

## REPLACEMENT OF PARTS

Examine the worm (47) for wear, as well as the bearings. See that the vertical shaft (41) has not been bent. Note that no part of it shows wear, PARTICULARLY where it is in contact with the packing assembly (49).

Replacements, if necessary, are easier to make while the meterhead is disasembled, and add years to the life of the meter.

## REASSEMBLING THE METERHEAD

(1) Insert the vertical shaft bearing (44) through opening (56) and press firmly into the shoulder.
(2) Replace the gear box (30) on the meterhead plate and secure with screws.
(3) Replace propeller shaft assembly (40), pressing the rear bearing (43) up to shoulder in gear box.
(4) Replace the front bearing (42) by sliding onto propeller shaft and into front of gear box.
(5) Replace propeller shaft plug (46) screw in propeller shaft plug thrust screw (46A) until it comes in contact with end of propeller shaft, back off thrust screw 1/4 turn and tighten propeller shaft plug lock nut. Make sure there is a slight clearance between thrust screw and end of propeller shaft.
(6) Replace vertical shaft (41). Be sure the worm (47) and gear mesh smoothly and that the propeller shaft turns freely with the fingers.
(7) Replace vertical shaft plug (56).
(8) Replace the Woodruff Key (45C) in the propeller shaft.
(9) Replace the propeller, washer and tighten the nut (39). Spin the propeller to check for free rotation. If propeller does not turn freely tap side of gear box to eliminate binding.
(10) Repack meter with grease, using force feed gun to fill the gear box through the grease fitting (54). Use enough grease to reach all moving parts, but not enough to cause a drag. Spin the propeller to be sure of its free and smooth rotation before returning the meterhead to the line.
(11) Replace Drive Gear Register Clock and cover as instructed on page 5.

## RETURNING METERHEAD TO THE LINE

This is the reverse of removing the meterhead from the line and requires the same care that no damage be done to the propeller.

METERS 10" and over — hold meterhead with propeller toward you. Tilt head plate toward you and slip one blade of the propeller horizontally over the edge of the opening. Lower metheread so the propeller "rolls" into the line. Turn meterhead so propeller faces "upstream." Lower headplate onto gasket so bolt holes are in correct position.

Insert cap-screws and tighten evenly all around.

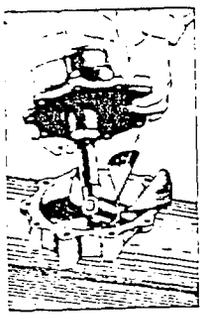

20



BEST AVAILABLE DOCUMENT

## REPAIR PARTS LIST
(See page 8 for Type 182 parts)

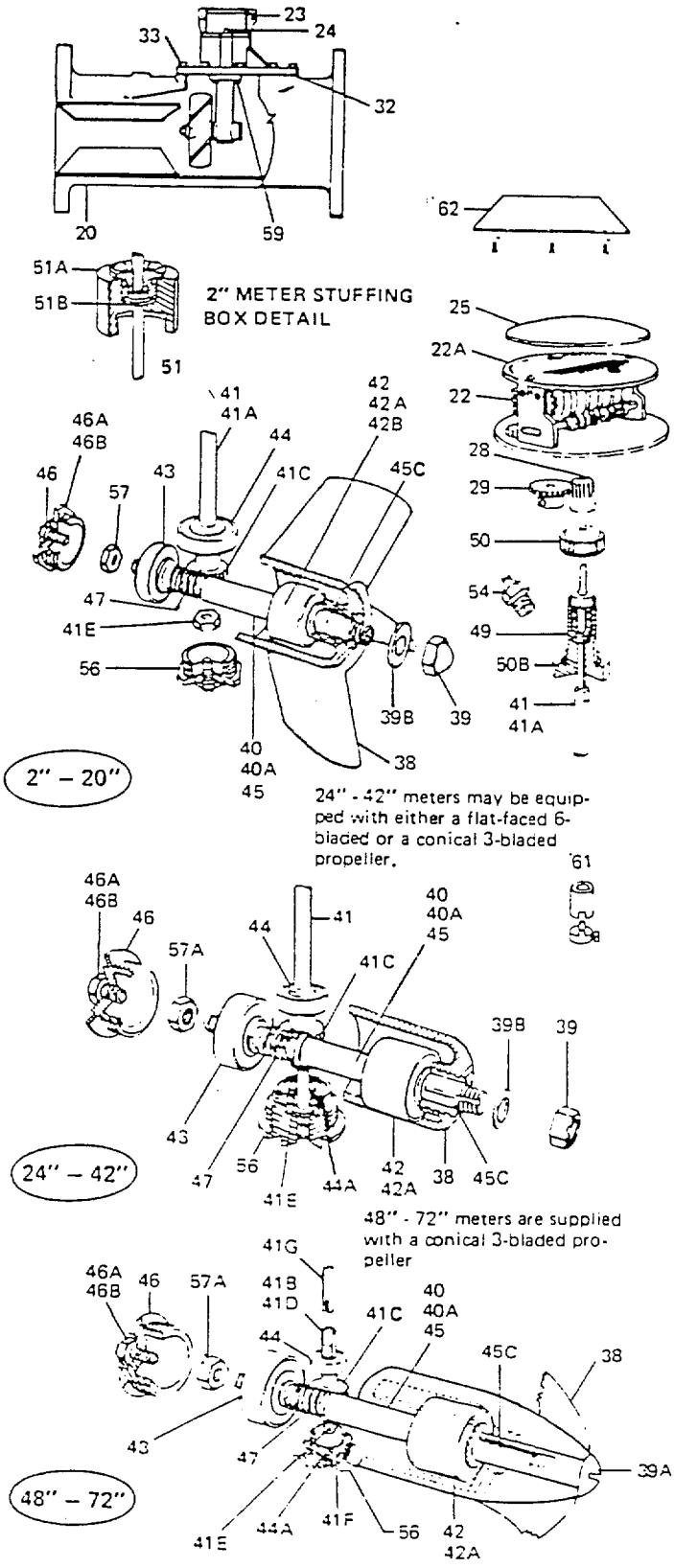


| ITEM | DESCRIPTION |
|---|---|
| 19 | Meterhead Complete |
| 20 | Flanged Tube Assembly |
| 22 | Register Clock Assembly—Cold Water (specify reg.) |
| 22 | Register Clock Assembly—Hot Water (specify reg.) |
| 22A | Register Clock Dial—Cold Water (specify reg.) |
| 22A | Register Clock Dial—Hot Water (specify reg.) |
| 22B | Register Clock Assembly Reverse Dial Mount (specify reg.) |
| 22C | Register Clock Assembly 10:1 (specify reg.) |
| 23 | Register Box & Cover Assembly |
| 24 | Register Box Screw |
| 25 | Register Box Glass |
| 28 | Drive Change Gear 5 thru 16 tooth (specify # teeth) |
| 28A | Drive Change Gear 17 thru 45 tooth (specify # teeth) |
| 29 | Clock Change Gear (specify # teeth) |
| 31 | Dummy Cover Plate |
| 32 | Cover Plate Gasket |
| 33 | Cover Plate Cap Screw |
| 38 | Propeller, Plastic – cold water |
| 38A | Propeller, Plastic – hot water (thru 20" only) |
| 39 | Propeller Shaft Nut (flat-faced propeller) |
| 39A | Propeller Shaft Nut (conical propeller) |
| 39B | Propeller Shaft Washer |
| 40 | Propeller Shaft Assembly Complete – single row |
| 40A | Propeller Shaft Assembly Complete – double row |
| 41 | Vertical Shaft & Gear Assembly |
| 41A | Vertical Shaft Assembly, less gear |
| 41B | Lower Vertical Shaft & Gear Assembly, less bearing |
| 41C | Vertical Shaft Gear |
| 41D | Lower Vertical Shaft Assembly, less gear & bearing |
| 41E | Vertical Shaft Lock Nut |
| 41F | Lower Vertical Shaft Lock Nut |
| 41G | Upper Vertical Shaft |
| 42 | Front Ball Bearing – single row |
| 42A | Front Ball Bearing – double row |
| 42B | Front Rubber Bearing |
| 42C | Front Bearing Sleeve (for use with 42B) |
| 43 | Rear Ball Bearing |
| 44 | Vertical Shaft Ball Bearing |
| 44A | Vertical Shaft Ball Bearing, lower plug |
| 45 | Propeller Shaft |
| 45C | Propeller Shaft Key |
| 46 | Propeller Shaft Plug Assembly |
| 46A | Propeller Shaft Plug Thrust Screw |
| 46B | Propeller Shaft Plug Lock Nut |
| 47 | Worm |
| 49 | "O" Ring Packing Assembly – cold water |
| 49A | Packing Ring, – hot water (Teflon) |
| 49B | Packing Ring, – hot water (graphite) |
| 50 | Packing Nut |
| 50A | Packing Follower (not required with # 49) |
| 50B | Packing Gland Body |
| 51 | Stuffing Box Assembly Complete |
| 51A | Stuffing Box |
| 51B | Packing Gland and "O" Ring Assembly |
| 54 | Grease Fitting |
| 56 | Vertical Shaft Plug Assembly |
| 57 | Propeller Shaft Thrust Nut |
| 57A | Rear Bearing Lock Nut |
| 59 | Gear Box Screw |
| 61 | Drive Clevis Assembly |
| 62 | Bolting Type Straightening Vane Assembly |

NOTE: FOR INSTRUCTIONS ON ORDERING PARTS SEE PAGE 8

BEST AVAILABLE DOCUMENT



21

## PAIR PARTS LIST
## 182 METERS ONLY

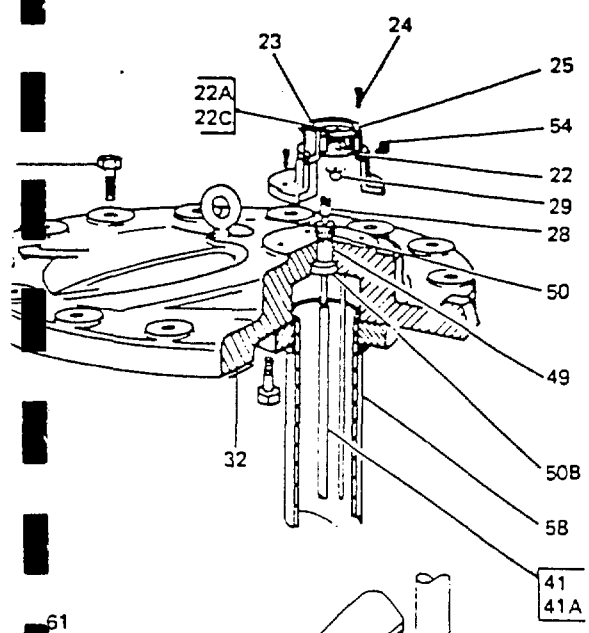


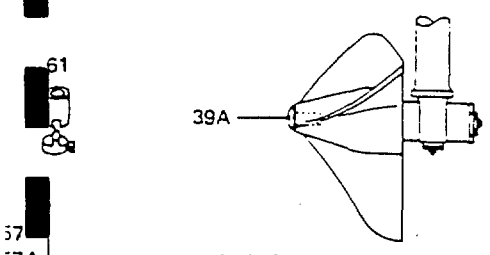


16" - 20" Type 906 meters are equipped with integral drop-pipe and gear box.

16" - 30" Propellers use conical type nut.

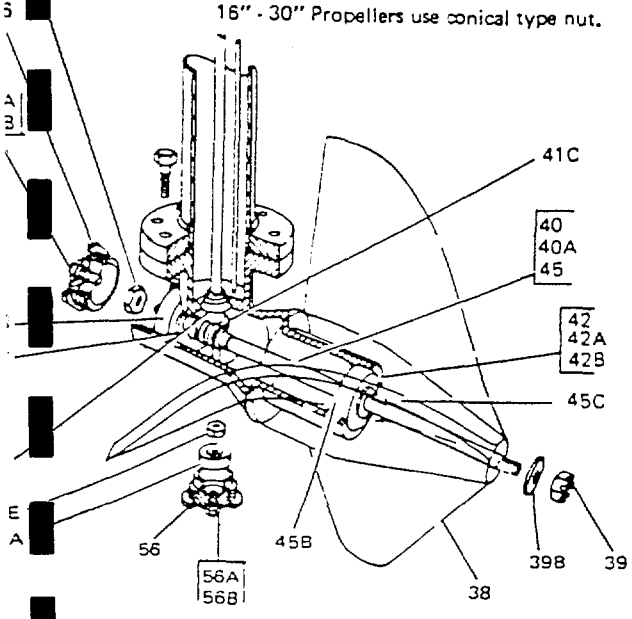


| ITEM | DESCRIPTION |
|---|---|
| 22 | Register Clock & Dial Assembly (specify reg.) |
| 22A | Register Clock Dial (specify reg.) |
| 22C | Register Clock & Dial Assembly 10:1 (specify reg.) |
| 23 | Register Box & Cover Assembly |
| 24 | Register Box Screw |
| 25 | Register Box Glass |
| 28 | Drive Change Gear 5 thru 16 tooth (specify # teeth) |
| 28A | Drive Change Gear 17 thru 45 tooth (specify # teeth) |
| 29 | Clock Change Gear (specify # teeth) |
| 31 | Dummy Cover Plate |
| 32 | Cover Plate Gasket |
| 33 | Cover Plate Bolt & Nut |
| 38 | Propeller, Plastic |
| 39 | Propeller Shaft Nut (hexagon) |
| 39A | Propeller Shaft Nut (conical) |
| 39B | Propeller Shaft Washer |
| 40 | Propeller Shaft Assembly Complete—single row |
| 40A | Propeller Shaft Assembly Complete—double row |
| 41 | Vertical Shaft & Gear Assembly |
| 41A | Vertical Shaft Assembly, less gear |
| 41C | Vertical Shaft Gear |
| 41E | Vertical Shaft Lock Nut |
| 42 | Front Ball Bearing—single row |
| 42A | Front Ball Bearing—double row |
| 42B | Front Rubber Bearing |
| 42C | Front Bearing Sleeve (for use with 42B) |
| 43 | Rear Ball Bearing |
| 44 | Vertical Shaft Ball Bearing |
| 44A | Vertical Shaft Ball Bearing, lower plug |
| 45 | Propeller Shaft |
| 45B | Bearing Retainer Ring |
| 45C | Propeller Shaft Key |
| 46 | Propeller Shaft Plug Assembly |
| 46A | Propeller Shaft Plug Thrust Screw |
| 46B | Propeller Shaft Plug Lock Nut |
| 47 | Worm |
| 49 | "O" Ring Packing Assembly—cold water |
| 50 | Packing Nut |
| 50B | Packing Gland Body |
| 54 | Grease Fitting |
| 56 | Vertical Shaft Plug Assembly |
| 56A | Vertical Shaft Plug Thrust Screw |
| 56B | Vertical Shaft Plug Lock Nut |
| 57 | Propeller Shaft Thrust Nut |
| 57A | Rear Bearing Lock Nut |
| 58 | Drop Pipe |
| 61 | Drive Clevis Assembly |

### FACTORY SERVICES

Complete Factory Meter service, overhaul and performance test is available. Contact your Sparling Representative for service rates.

### ORDERING PARTS

WHEN ORDERING PARTS, PLEASE INCLUDE THE FOLLOWING INFORMATION:

1. Meter Serial No.
2. Meter Size
3. Correct Item Number
4. Part Description
5. Mention IDS-115



BEST AVAILABLE DOCUMENT

22