PN-ACA-992

Environmental Policy and Technology Project

Contract No. CCN-0003-Q-00-3165

KAZAKHSTAN

FIELD REPORT

Interim Field Investigations in Kazakhstan: Regional Water Systems in Kyzl Orda Oblast

Trip Conducted May-June 1994

October 1994
Delivery Order 04, Task 1

Prepared for:
Central Asia Mission
U.S. Agency for International Development

Prepared by:
Central Asia Regional EPT Office in Almaty, Kazakhstan
Environmental Policy and Technology Project
For the New Independent States of the former Soviet Union
A USAID Project Consortium Led by CH2M HILL

Contents

Section		Page
Acronyms		**iii**
Executive Summary		**v**
1	**Project Background**	**1-1**
	Introduction	1-1
	Scope of Work	1-3
2	**General Description of Water Systems**	**2-1**
3	**Wellfields**	**3-1**
	General Description	3-1
	Kosaman Wellfield	3-1
	Berdykol Wellfield	3-3
	Capacity of Wellfields	3-3
4	**Transmission Pipeline**	**4-1**
5	**Booster Pump Stations**	**5-1**
	General Description	5-1
	Pump Station 1	5-2
	Pump Station 2	5-4
	Pump Station 3	5-4
	Pump Station 4	5-7
	Pump Station 5	5-7
	Pump Station 7	5-11
6	**Chlorination Facilities**	**6-1**
	General Description	6-1
	Aralsk Chlorination Facility	6-3
	NovoKazalinsk Chlorination Facility	6-3
	Priority Improvements	6-4
7	**Laboratory Facilities**	**7-1**
	General Description	7-1
	Aralsk Laboratory	7-1
	NovoKazalinsk Laboratory	7-2
	Recommended Laboratory Equipment for NovoKazalinsk and Aralsk	7-3

Contents

8 Urban and Rural Distribution Systems 8-1
Aralsk 8-1
NovoKazalinsk 8-1
Term 3 Rural Distribution System 8-2

9 Recommendations 9-1

Appendix A: Trip Itinerary

Appendix B: Principal Persons Interviewed

Appendix C: Logistics Problems in Kzyl Orda Oblast

Appendix D: Letter from Kazalinsk Rayon

Appendix E: Letter from Aralsk Rayon

List of Tables

Number **Page**

1 Tests Routinely Performed at Aralsk Laboratory 7-2
2 Recommended Laboratory Equipment for NovoKazalinsk and Aralsk 7-3
3 Estimated Requirement of PVC Pipe for Term 3 8-2

List of Figures

Number **Page**

1 Project Location Map 1-2
2 Project Area - Kzyl-Orda Oblast, Kazakhstan 2-2
3 Wellfield Layouts 3-2
4 Pump Station 1 - Kosaman Wellfield 5-3
5 Pump Station 2 - Berdykol Wellfield 5-5
6 Pump Station 3 5-6
7 Pump Station 4 - Aral-Kum 5-8
8 Pump Station 5 - Kamyshlybash 5-9
9 Pump Station 7 - NovoKazalinsk 5-10
10 Typical Chlorination System 6-2
11 Term 3 - Rural Pipeline Extension 8-3

Acronyms

CAR	Central Asian Republics
EPT	Environmental Policy and Technology
FWRC	Federal Water Resources Commission
gpd	gallons per day
gpm	gallons per minute
hp	horsepower
kW	kilowatt
lps	liters per second
mgd	million gallons per day
MOU	Memorandum of Understanding
NIS	Newly Independent States
O&M	operation and maintenance
PS	Pump Station
psi	pounds per square inch
SCBA	self-contained breathing apparatus
TDS	Total Dissolved Solids
USAID	United States Agency for International Development
USG	United States Government
WTP	Water Treatment Plant

9

Executive Summary

This report summarizes the findings of a field visit to Kzyl Orda Oblast in western Kazakhstan, conducted in May and June 1994, by an Environmental Policy and Technology (EPT) Project team. The trip's purpose was to define the Scope of Work for the implementation activities included in the Memorandum of Understanding (MOU) executed between the United States Government and the Government of Kazakhstan on March 18, 1994.

The field team made site inspections of the major facilities in the main transmission system, including wellfields, individual pump stations, distribution systems in Aralsk and NovoKazalinsk, and some of the rural areas. The team interviewed governmental officials at the federal, oblast and rayon[1] levels. Detailed information was obtained at each facility and is included in the report on the field investigations. The field team identified serious problems in all areas. Some of the problems, such as equipment replacement, could be remedied on a rapid basis. However, the more serious problems, such as pipeline replacement, cannot be corrected in a short time frame and would require a phased program over several years.

Activities in Kazakhstan are part of EPT's Aral Sea Program for the Central Asian Republics (CAR) Region of the Newly Independent States (NIS) of the Former Soviet Union. The Aral Sea Program is designed to provide improvements in potable water and assistance to the maximum number of beneficiaries; it is to be implemented as quickly as possible. The MOU was negotiated to provide a staged program of water supply improvements with six elements. Three of these elements can be completed as anticipated, i.e., water monitoring (equipment for laboratories in Aralsk and NovoKazalinsk), water quality (chlorination equipment), and education (public health and sanitation program).

The remaining elements of this program are more complicated. The apparent need for maintenance and spare parts for the wellfields and the transmission system is urgent. New projects downstream (such as Term 3 pipeline extensions) would be subject to systems failure without these improvements. As a result, it would be practical to initiate a hands-on repair program that begins at the wellfields and continues along the transmission line and pump stations. A field team with equipment and spare parts, working with the local operation and maintenance (O&M) personnel, could greatly improve the reliability of the entire system up to a determined budget level. These activities would result in a technical assistance program, provide emergency assistance and result in the maximum number of beneficiaries.

Water distribution in the rural areas can be achieved in the short-term by providing water trucks. The water trucks would convey water to the settlements from a pump station that would be equipped with new chlorination facilities. Material for pipelines in the cities of Aralsk and NovoKazalinsk could be provided, although construction of pipelines could not begin until next year and would be a long-term project.

---

[1]Rayon is a term for city.

5

Consideration should also be given to evaluating the water treatment facility that "treats" the seriously contaminated water from the Syr Darya (Syr River) for the city of NovoKazalinsk. This area is not served by the transmission main from the wellfields, and it is anticipated that some operational improvements can provide improved water quality in the short-term until the new pump station near Pump Station (PS) 7 can be constructed.

A team of local scientists from the Academy of Sciences visited the area immediately following the field team and were also disturbed by the public health conditions in this area. Some of the health statistics are horrendously bad and the water supply improvements clearly warrant immediate attention.

Specific recommendations are outlined in Section 9.

Section 1

Project Background

1.1 Introduction

The Memorandum of Understanding (MOU) between the Government of Kazakhstan and the USG was executed on March 18, 1994. The MOU centers on making improvements to the potable water systems in and around the cities of Aralsk and NovoKazalinsk in the Kzyl Orda Oblast, located in western Kazakhstan as shown in Figure 1 (page 1-2).

Specific activities anticipated in the MOU include the following:

1. Improve the booster pumping stations along the main transmission pipeline
2. Provide pipe and fittings for the extension of potable water pipelines in selected rural areas
3. Provide pipe and fittings for improvements to water distribution systems of Aralsk and Kazalinsk
4. Improve existing chlorination systems
5. Improve existing water quality monitoring laboratories
6. Provide public health training
7. Provide economic analysis expertise

These activities in the MOU were based on understandings gained from site visits by USAID and EPT staff to Kazakhstan in November 1993 and January 1994. The December visit provided an initial overview of the area while the January visit documented the construction capability of oblast construction crews and collected water samples.

These first two visits provided a basic understanding of the potable water systems. However, these visits were of short duration and focused on assessment of construction crews and water quality sampling. As a result, there was insufficient data accumulated on the transmission system facilities – wellfields, pump stations, pipeline, etc. – to enable design of improvements to proceed.

Accordingly, this project was authorized (Delivery Order 04) to make visits to the proposed project sites to document existing facilities (Activities 1 through 5 above) and make recommendations for priority improvements. A three-person EPT team was assembled to undertake this fact finding mission. Following a team planning meeting on May 19, 1994, in Washington, D.C., the team (Jeff Bair, Jeff Stanford and Carl Schmutte) arrived in Almaty,

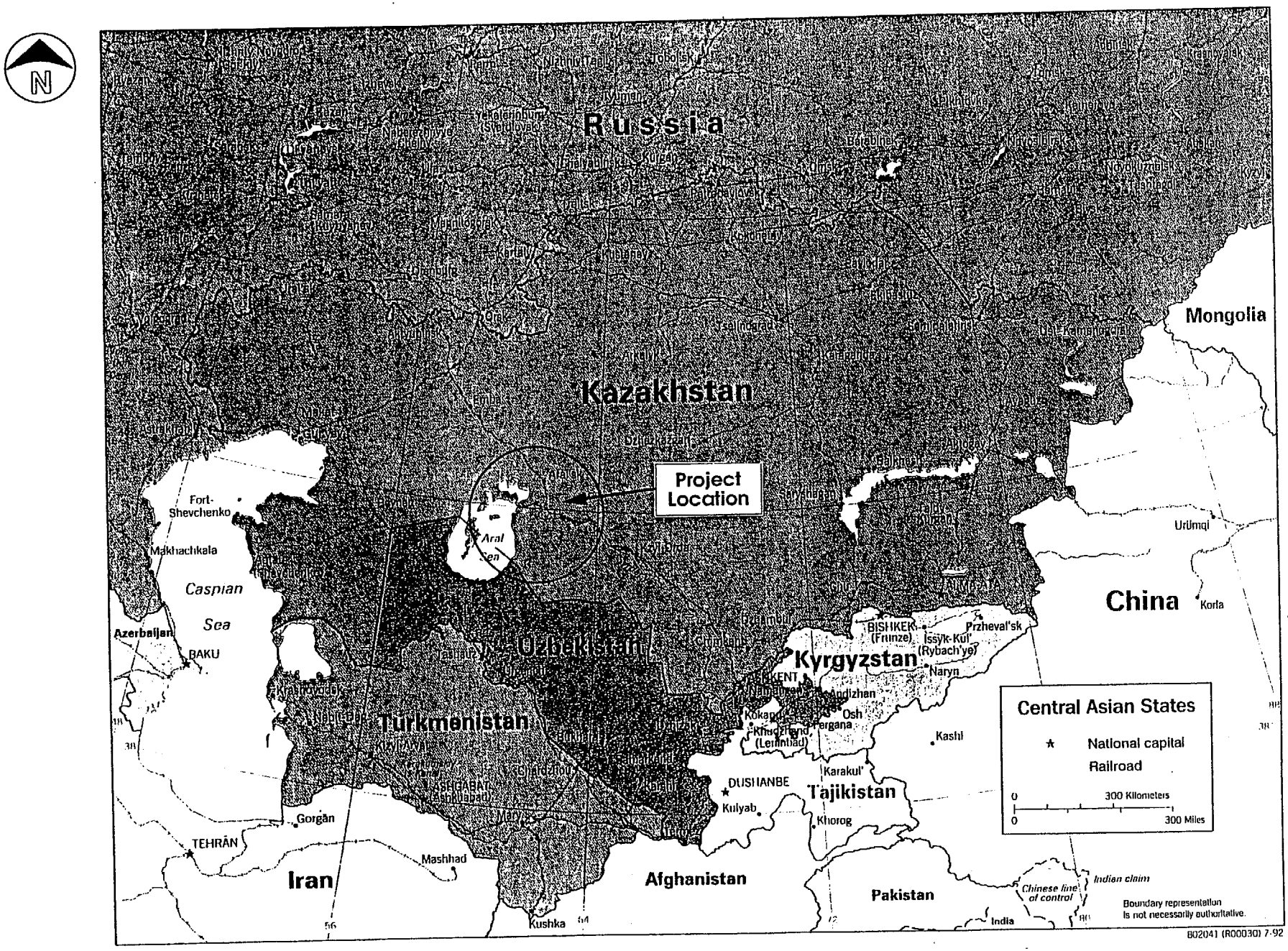

Figure 1
Project Location Map

BEST AVAILABLE DOCUMENT

8

Kazakhstan on May 22. They completed site inspections and interviews from May 23 to 31, and returned to the United States on June 7. Details of their trip summary are in Appendix A.

1.2 Scope of Work

Specific work activities of the inspection team were as follows.

For the transmission system:

- Interview key host country professionals knowledgeable about the wellfield, pump stations, and transmission main.
- Determine the exact number of pump stations involved.
- Inspect each pump station to document existing mechanical and electrical components, and inspect chlorination system. Documentation was to include photos, sketches and base plate information, i.e., pump capacities, motor sizes, etc.
- Interview operators of the transmission system to document their opinions on needed facility improvements and operational problems, including pump shutdowns.

For the urban/rural distribution systems, work included gathering information on the existing distribution systems of Aralsk and NovoKazalinsk and the Term 3 expansion area, on the water quality monitoring laboratories, and on the means and methods of water pipeline construction.

Specific tasks were to:

- Interview key local officials and personnel knowledgeable with their distribution systems.
- Review maps, drawings, specifications and other information related to each city's distribution system and make copies of this information or sketches, if necessary.
- Discuss specific areas of improvements, including local experts' recommendations on high-priority expansions and replacements.
- Evaluate the feasibility of procuring pipe and material locally.

Section 2
General Description of Water Systems

The cities of Aralsk and NovoKazalinsk obtain their potable water from two different sources. Aralsk and most of the rural settlements north of NovoKazalinsk obtain their water from the Federal Water Resources Commission's[2] (FWRC) transmission pipeline and booster pump stations. The source is artesian groundwater from wellfields located about 110 kms northwest of Aralsk as shown in Figure 2 (page 2-2). NovoKazalinsk obtains its water from its own water treatment plant (WTP); the source of water is the Syr Darya. Kazalinsk can apparently obtain its water from either source, as described below.

The FWRC system includes the Kozaman and Berdykol wellfields, 206 kms (128 miles) of transmission pipe, six booster pump stations, and several rural distribution systems (pumps and pipes) all serviced from the transmission pipeline/pump stations. The largest of these rural distribution systems is the Term 3 expansion, serviced from PS 5.

All of the major components of the FWRC system (shown in Figure 2) including wellfields, pump stations, transmission pipeline, and the Term 3 expansion system, were inspected as part of this study.

Aralsk taps water off of the pipeline to its own pump station and chlorination facility and distributes it to city users. A cursory examination was made of the Aralsk pump station in this study with primary attention directed at the laboratory and chlorination system.

The termination pump station on the transmission pipeline is PS 7, located in the outskirts of NovoKazalinsk. From there water is pumped to Kazalinsk and surrounding settlements but not to NovoKazalinsk. There is no direct piping connection from PS 7 to NovoKazalinsk. However, there is a direct piping connection from the transmission pipeline to NovoKazalinsk's distribution system near PS 7, which is valved closed. This connection was intended to supply water to a new city-owned pump station adjacent to PS 7. Construction of the new station was begun but abandoned in 1993 due to lack of funding. The inspection team took photos of this station, but no other specific information was available.

The city of NovoKazalinsk obtains its water exclusively from the Syr Darya. NovoKazalinsk owns and operates its own surface WTP and it has coagulation, clarification, sand filtration and chlorination equipment. Plant capacity is estimated at 2 to 4 mgd. At the time of the field inspection, the plant's coagulation and clarification systems were out of service and the river water was receiving only sand filtration and (poorly maintained) chlorination. Evaluation of this WTP was beyond the scope of this study. Water from this plant is also pumped to Kazalinsk.

---

[2]This is a close interpretation of the name of the authority which owns the wellfields, the booster pump stations and the transmission mains.

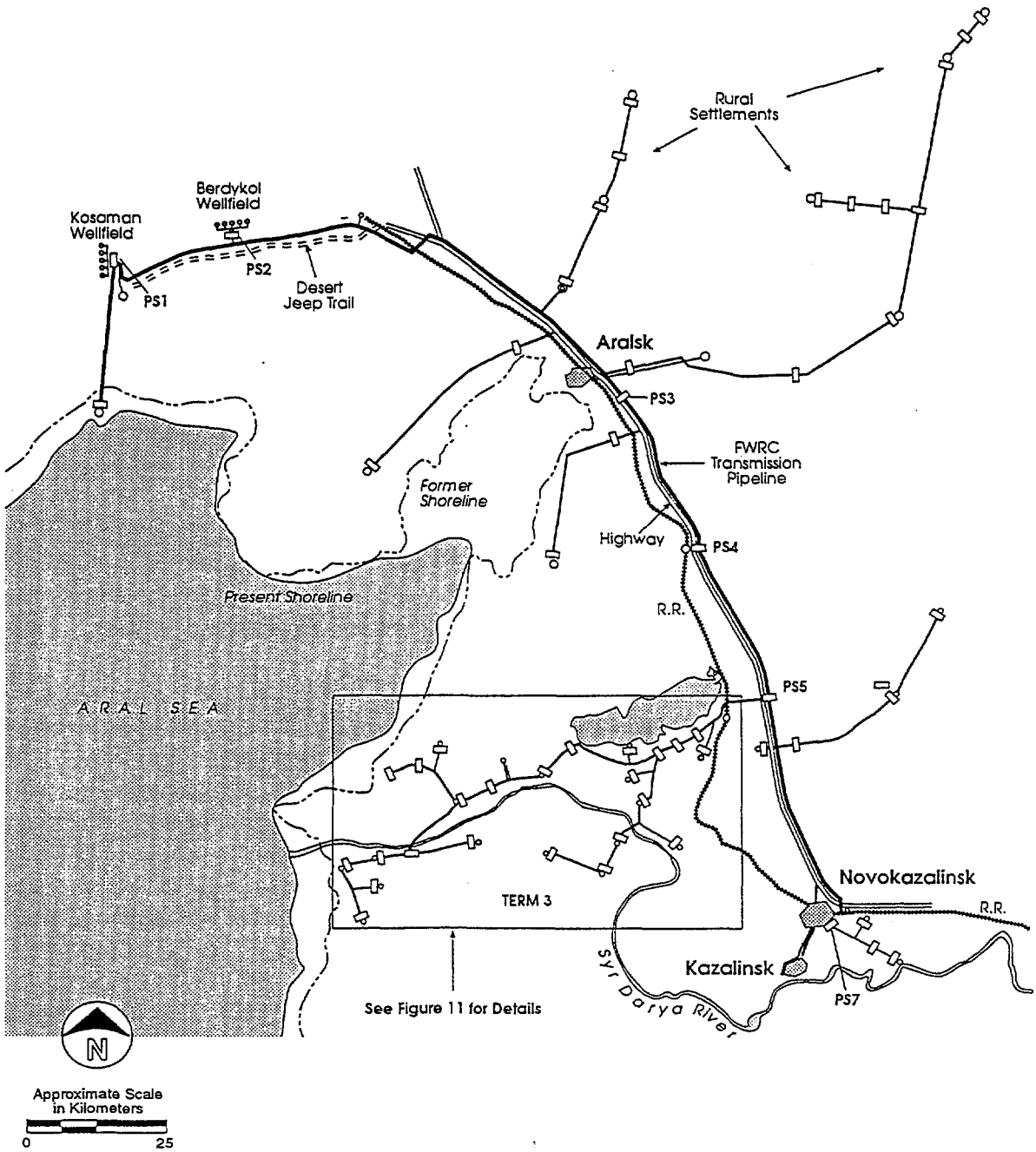

Figure 2
Project Area – Kzyl Orda Oblast, Kazakhstan

11

It was previously understood that NovoKazalinsk received most of its water from the FWRC groundwater system and utilized river water only during periodic shutdowns of the transmission pipeline. Accordingly, a goal of the MOU was to get NovoKazalinsk and Kazalinsk completely off river water use by improving the reliability of the FWRC transmission system. Findings of this study indicated, however, that NovoKazalinsk obtains all its potable water from the river. Although it is unclear, it would appear that Kazalinsk obtains most of its water from the NovoKazalinsk WTP.

Interviews with local officials in NovoKazalinsk indicated that they would use water from the FWRC transmission main if the new pump station was completed and if they could receive subsidies for the cost of the FWRC water. Otherwise they are in no position to abandoned their own WTP and connect to the FWRC system.

The populations of Aralsk and NovoKazalinsk are approximately 40,000 each. Kazalinsk is estimated to have a population of 10,000. Population of the settlements in and around the cities is estimated at 60,000. Total population of the planning area is approximately 150,000. Of this total, approximately 50,000 get their water from the FWRC system; 40,000 in Aralsk and 10,000 in rural settlements. Approximately 60,000 receive their water from the NovoKazalinsk WTP.

Section 3
Wellfields

3.1 General Description

The Kosaman and Berdykol wellfields are located northeast of the Aral Sea (see Figure 2). The Kosaman field was constructed in 1972; the Berdykol field in or around 1980.

The two fields are approximately 110 kms (70 miles) and 80 kms (50 miles), respectively, northwest of the city of Aralsk. Access to the wellfields is via 30 kms (20 miles) of paved road, and 90 kms (55 miles) of unimproved desert (steppe) road that is limited to four-wheel drive vehicles. It took the inspection team 6 hours to travel the 90 kms (55 miles) of desert road to Kosaman. The team returned to Aralsk the same day.

A schematic of the two wellfields is shown in Figure 3 (page 3-2) The Kosaman wells deliver water to PS 1 while the Berdykol wells deliver water to PS 2. The transmission main begins with PS 1. PS 2 manifolds into it.

The wellfields and their respective pump stations are operated and maintained by FWRC personnel (approximately 16 at Kosaman and 18 at Berdykol), including operators, electricians and support staff. These personnel live in small settlements near each wellfield and pump station. Operating personnel reported to the inspection team that they haven't been paid in 6 months.

Major equipment, such as cranes and excavators, is antiquated and in need of spare parts or replacement. There were only two operational excavators for the entire 110 kms of pipeline from Aralsk to the Kosaman field.

The terrain of the area is a high desert. Reported low temperatures average -40°C. During and after snow storms, it is not uncommon for power outages to last 7 to 10 days.

Water quality from both wellfields is reported to be excellent with no bacteriological or chemical contamination. The area is remote and no sources of contamination were observed by the inspection team.

3.2 Kosaman Wellfield

The Kosaman wellfield consists of 30 wells, of which 16 are operational. Twenty of these wells are relatively new, having been constructed in the last 2 years (1991-1992). However, only eight of these newer wells are operational. Problems include the collapse of casings and lack of submersible pumps. When a problem occurs with a well, it is taken out of service and its parts salvaged for use in another well. This apparently is the only source of spare parts. With this management plan, the number of functioning wells will likely continue to decrease.

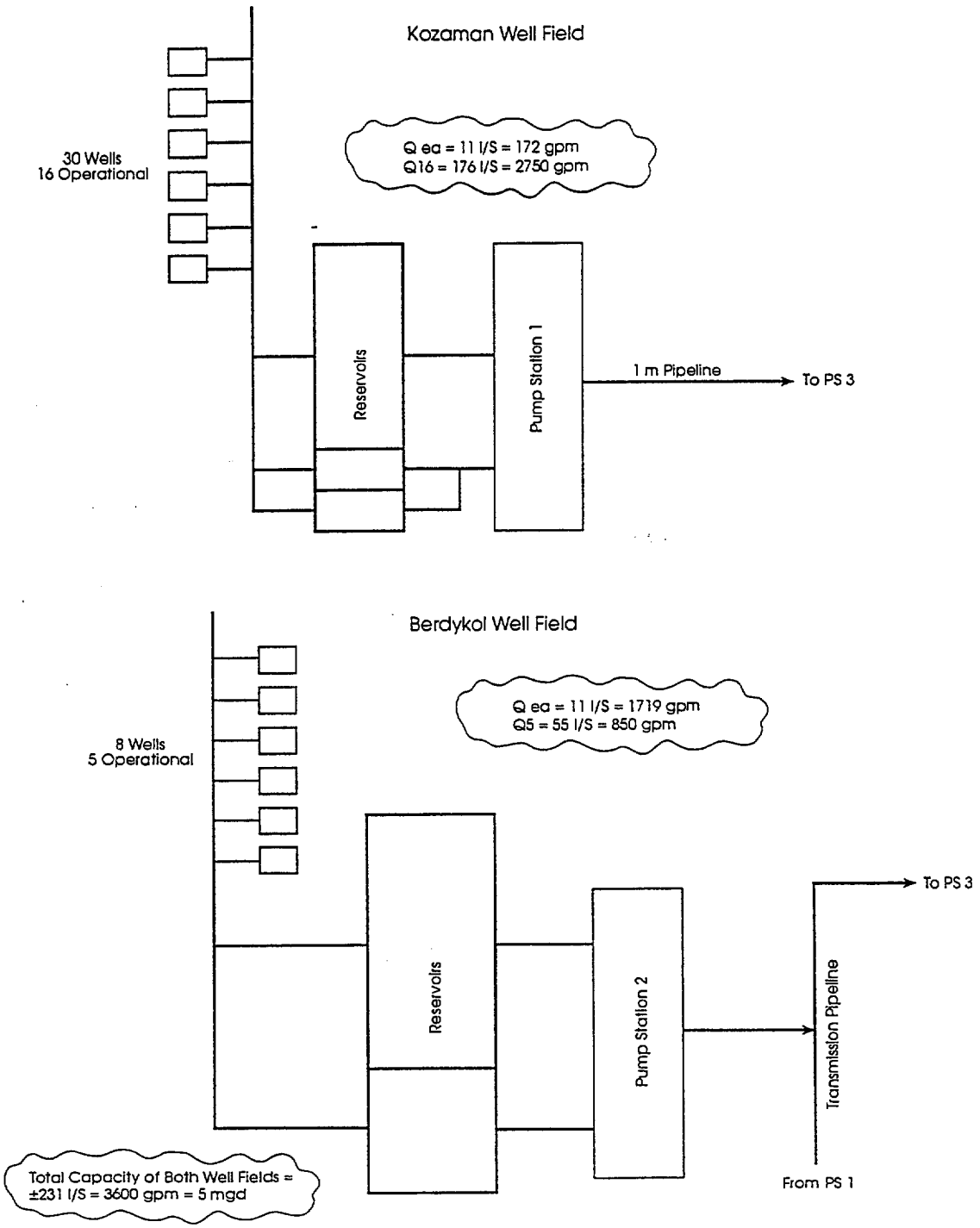

Figure 3
Wellfield Locations

14

Average depth of the wells is 170 to 200 meters (560 to 660 feet). Average pump placement depth is 60 meters (200 feet). Distance between wells is approximately 200 meters (660 feet). According to the chief engineer, pump capacity is estimated at approximately 11 lps (170 gpm). There were no flow meters and this capacity could not be confirmed. Each pump is equipped with 25 kW (33 hp) motors. Electrical service is 380 volt, 3 phase. There are no motor overload relays and no motor surge protection. Discharge piping diameter is 100 mm (4 inches).

The well pump houses are poorly constructed. Windows consist of glass (many broken) or plastic. Doors are made of wood slats that are far from air tight. Heat consists of a canister wood stove in the corner of the pump house. Access for pulling the pump is through the roof of the building.

3.3 Berdykol Wellfield

The Berdykol wellfield consists of eight wells of which only five are operational. The same problems, i.e., lack of pumps and spare parts and the collapse of well casing, is as prevalent at Berdykol as at Kosaman. It was observed that, due to lack of pump column pipe, old corroded pipe is reused when repairing pumps.

Average depth of the wells is 147 meters (485 feet). Distance between wells is approximately 350 meters (1,200 feet). Other data is very similar to the Kosaman wellfield, i.e., each of the pump's capacity is reported to be approximately 11 lps (170 gpm). Each of the submersible pumps is equipped with 380 v, 3 phase, 25 kW (33 hp) motors.

The well pump houses were of similar construction to those at Kosaman and in a similar poor state of repair – broken windows, wood slat doors, inefficient heating, etc.

3.4 Capacity of Wellfields

Assuming the Kosaman wellfield can maintain 16 operating wells capable of pumping 11 lps (170 gpm) each, the present capacity of this wellfield is estimated at 176 lps (2,720 gpm or 4 mgd). Capacity of the Berdykol wellfield with five operating wells is estimated at 55 lps (850 gpm or 1 mgd). Total pumping capacity of the existing wellfields is therefore estimated at 231 lps (3,570 gpm or 5 mgd).

The team's investigation did not include assessment of any hydrogeologic aspects of the wellfields such as the safe yield of the groundwater resources. However, information presented by the FWRC indicated that the "underground water reserves in the Kosaman and Berdykol wellfields are 580 lps and 210 lps," respectively, for a total capacity of 790 lps (12,200 gpm or 17.6 mgd).

Section 4
Transmission Pipeline

The FWRC's water transmission pipeline and pump station system is shown in Figure 2. It begins with PS 1 in the Kosaman wellfield and terminates at PS 7 near NovoKazalinsk. Total length of the pipeline is approximately 206 kms (128 miles).

Pipeline construction materials are of three types, steel-reinforced concrete, steel and PVC. The pipeline originates at the wellfield with 1-m (40-inch) diameter pipe, then reduces through the route to 800-mm (31.5-inch) and then to 720-mm (28-inch) diameter pipe. A section of 630-mm (25-inch) PVC pipe is installed in a run of 800-mm steel reinforced concrete pipe between PS 3 and PS 4. Another section of 630-mm PVC pipe is installed in a run of 720-mm steel pipe between PS 4 and PS 5. The availability of these materials at various times of construction determined which size and type of pipe was used.

The pipeline is buried throughout its length and its state of repair could not be assessed. However, the chief engineer of the northern section of the pipeline – from the wellfields to Aralsk – stated that there are seven known leaks in that section. The inspection team did observe one apparent leak while traversing the desert road along the pipe alignment to the Berdykol wellfield. The leak had formed a pond approximately 100 meters (over 300 feet) long by 20 meters (60 feet wide).

It is concluded that there has been little maintenance on the pipeline since it was installed and, because of the reported leaks, the basic integrity of the entire pipeline is suspect.

16

Section 5
Booster Pump Stations

5.1 General Description

There are six major booster pump stations along the pipeline, including the two, PS 1 and PS 2, at the wellfields. The inspection team visited all of the stations, made sketches of station layout (included as figures in this report), collected pump and motor nameplate data, took notes on the state of repair of the facilities including the buildings, interviewed operating staffs and took representative photos.

Four of the stations – PS 3, PS 4, PS 5 and PS 7 – are booster stations along the route. Each has its own suction intake reservoir(s) into which the previous pump station discharges. There is also a PS 6. However, it serves rural settlements north of NovoKazalinsk and is not a booster station along the transmission pipeline. This pump station is not indicated on the figures. PS 6 was not inspected or evaluated.

The city of Aralsk owns and operates a pump station which taps off the transmission main between PS 2 and PS 3. Evaluation of the chlorination and laboratory facilities were made of this station. The city of NovoKazalinsk began construction of a master pump station adjacent to FWRC's PS 7. However, station construction was stopped in mid-1993; the station stands 30% completed. No detailed assessment was made of this station, although photos were taken.

Each of the six booster pump stations consist of a concrete pump house and at least one above-grade, earth-covered concrete reservoir. The pumps are pad-mounted horizontal centrifugal pumps with suction intake from the reservoirs. Schematics of the six pump stations are shown in Figures 4 through 9.

Stations 1 and 2 were in the worst condition. During the field inspection all of the stations were functional with one or more pumps operating. However, all stations are in need of spare pumps, motors, parts and packing materials.

There were no flow meters or automated controls at any of the stations. Operation of each station was governed by downstream requirements. The downstream operator would call the upstream operator via radio. He would then notify him to turn on their pumps to fill the downstream reservoir to the desired level.

Each of the six pumping stations had chlorination equipment installed in them. However, none of the chlorinators were operating at the time of the inspection (May 1994). This was due to lack of chlorine (70-kg cylinders), and because of various equipment problems that had not been fixed. Chlorination facilities will be discussed further in Section 6.

Regarding electrical components of the pump stations:

17

- All the stations are serviced by 380 volt, 3 phase power.
- All motor controls are in a state of disrepair, but operating.
- No overload protection is afforded to the motors other than the circuit breakers associated with each motor.
- No conduit is used other than field-fabricated steel raceway troughs.
- No emergency standby power is provided at any of the stations.

Access to pumping stations 1 and 2 is very difficult across desert jeep trails. There is good access to Pumping Stations 3, 4, 5 and 7 from the highway.

5.2 Pump Station 1

PS 1 is located at the Kosaman wellfield; Figure 4 (page 5-3) provides a schematic flow diagram of the station. The station pumps water to PS 3 via approximately 110 kms of the transmission pipeline. It also provides water to the small settlements around the station. It has a 500-m^3 reservoir for main transmission needs and two 100-m^3 reservoirs for the settlements.

The main transfer pumps are one D1250-65H (Q = 1250 m^3/hr and water level and head[3] of 65 meters) pump and one D400-65H (Q = 400 lps and water level head[2] of 65 meters) pump. Assuming the largest operating pump out of service, the firm capacity of this station is 1,250 m^3/hr (5,500 gpm).

The K90-50H pumps provide water to the local settlements. Only one pump was in operation at the time of the inspection; the other was missing. The original design was based on two D1250-65H pumps, but one of these has been replaced with the D400-65H pump.

State of repair of the pump station is poor with pump pedestals showing signs of deterioration and shims made from any type of scrap metal available. There were few spare parts. The station had new and larger D2000-100H pumps stockpiled in the yard awaiting construction of a new 1,300-m^3 reservoir and station. However, this project has been cancelled, reportedly due to lack of funding.

Priority improvements to this station should include the following:

- Provide spare pump and motor (D400-65H)
- Repair pump pedestals
- Repair building (broken windows, doors, etc.)
- Improve chlorination system (see Section 6)

---

[3]The field team was not able to determine the exact meaning of the name plate data. It is assumed that the head as related is the shut-off head as indicated by the kW rating on the motors.

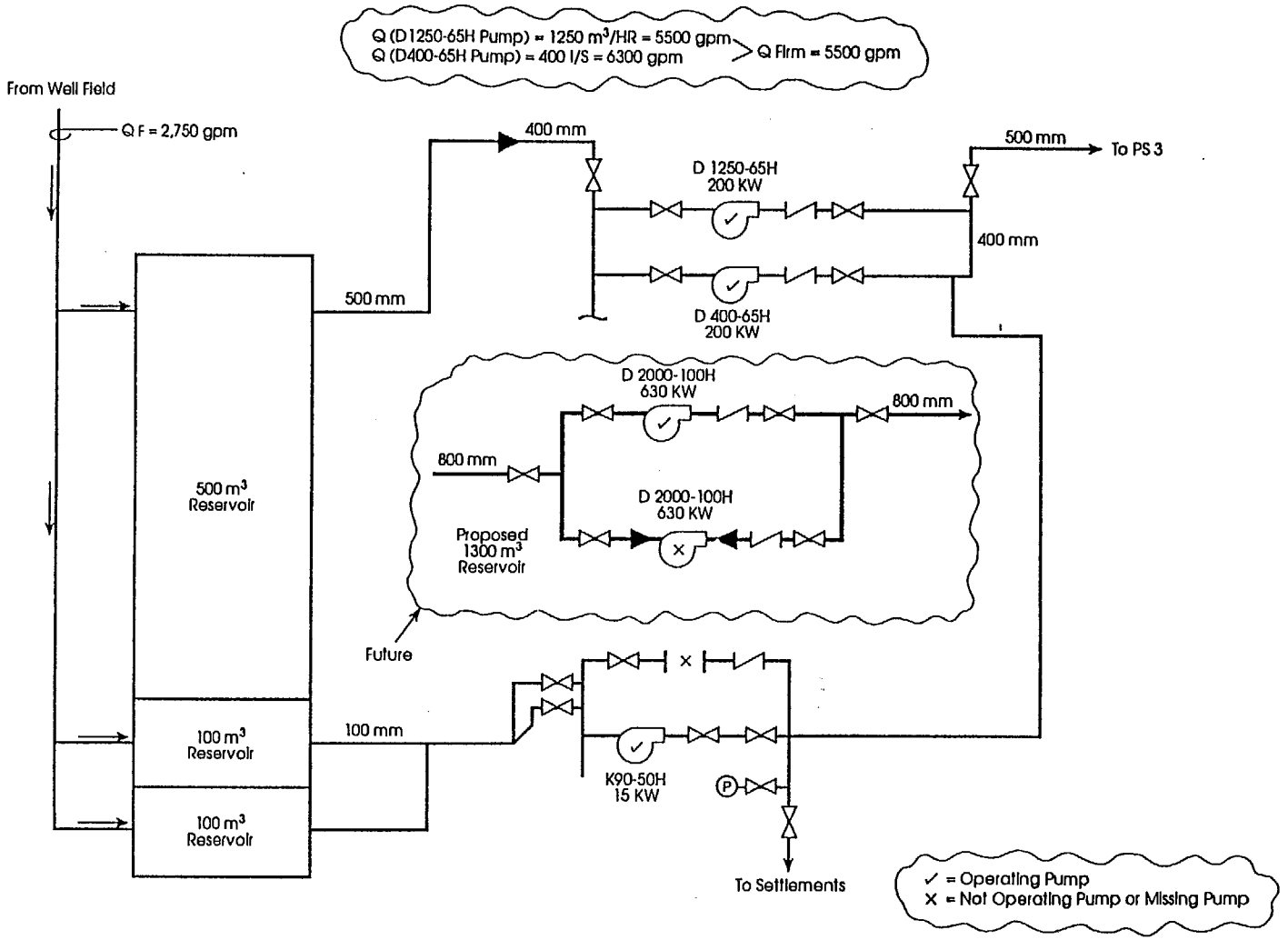

Figure 4
Pump Station 1 – Kosaman Wellfield

19

Construction of the proposed new 1,300-m^3 reservoir and pump station could be a priority. However, its immediate need is unclear because present water demands seem to be met with the existing reservoir and pump station. More assessment of demands is needed to accurately assess the priority need of this expansion. Another improvement would be to replace the motor control center which is in a state of disrepair but operational.

5.3 Pump Station 2

PS 2 is located at the Berdykol wellfield; Figure 5 (page 5-5) provides a schematic flow diagram of the station. The station manifolds into the transmission pipeline from PS 1 and pumps 80 kms to PS 3.

The main transfer pumps are two 350D-90H pumps (Q=350 m^3/hr each) and one D200-90H pump (Q=200 m^3/hr). Only one of the 350D-90H pumps is operating due to a missing motor on the second pump. The original design was based on three 350D-90H pumps in the station. Assuming that the largest operating pump (350D-90H) is out of service, the firm capacity of this station is 200 m^3/hr (870 gpm).

The K160-35H and K90-35H pumps provide water to the local settlements.

Access to this station is difficult across 60 kms of desert jeep trails. State of repair of the station is poor with most of the pump pedestals showing signs of deterioration, shims made from any type of scrap metal, and the building with broken windows and poor heating.

Priority improvements would include the following:

- Provide a new 350D-90H pump and motor
- Install new pump pedestals and pump mounts
- Repair buildings (broken windows, doors, etc.)
- Improve chlorination system (see Section 6)

5.4 Pump Station 3

PS 3 is located on the main highway, approximately 70 kms southeast of PS 2. The station pumps both to the city of Aralsk's pump station (8 kms) via a tap off the main line and to PS 4 (38 kms). The station is readily accessible from the highway. A flow schematic of the station is shown in Figure 6 (page 5-6).

The main transfer pumps are one D1250-65H and two D200-90H pumps. One of the D200-90H pumps is presently off line to a missing motor and possible bearing problems in the pump. Assuming the largest operating pump (D1250-65H) out of service, the firm capacity of this station is 200 m^3/hr (870 gpm).

20

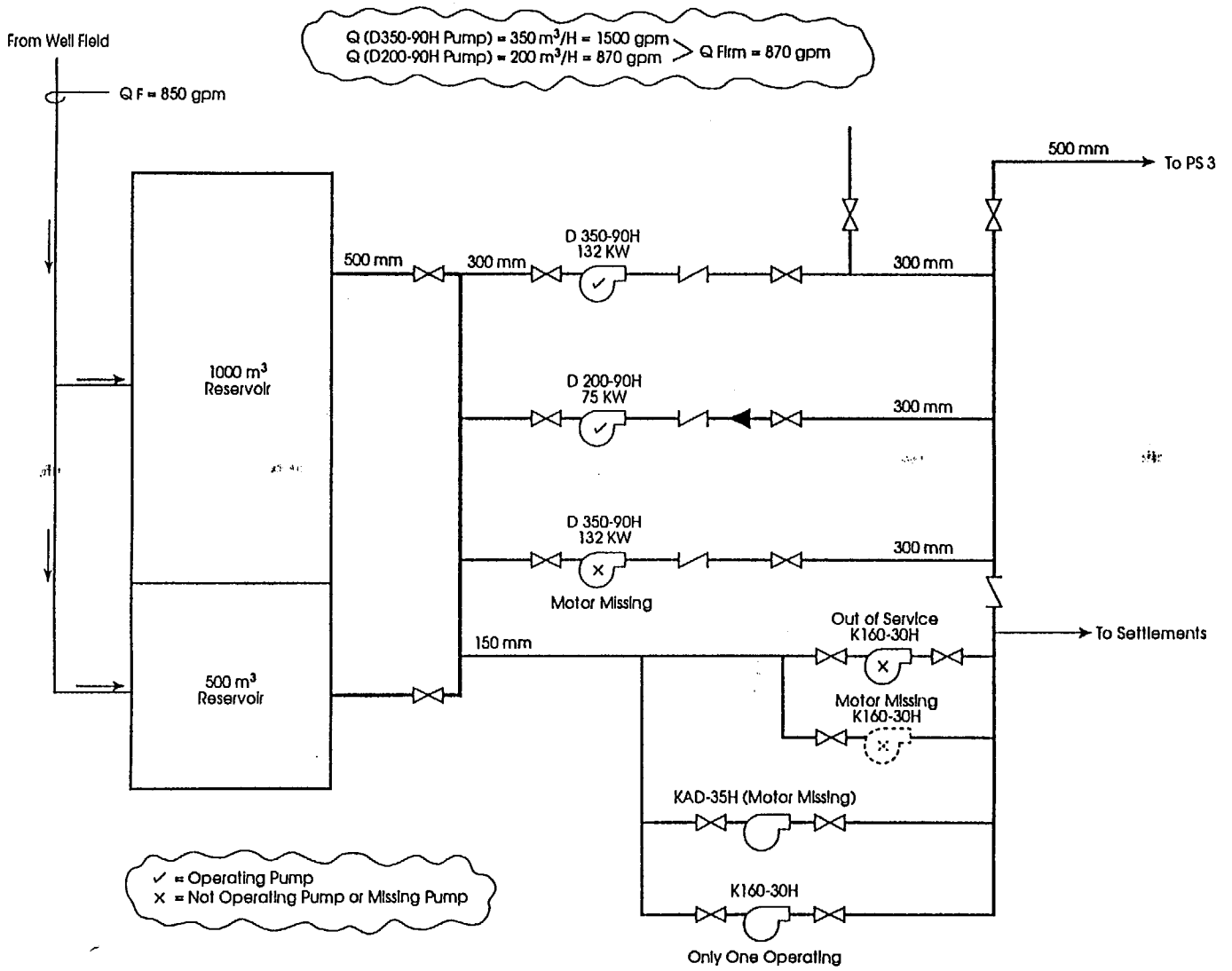

Figure 5
Pump Station 2 – Berdykol Wellfield

21

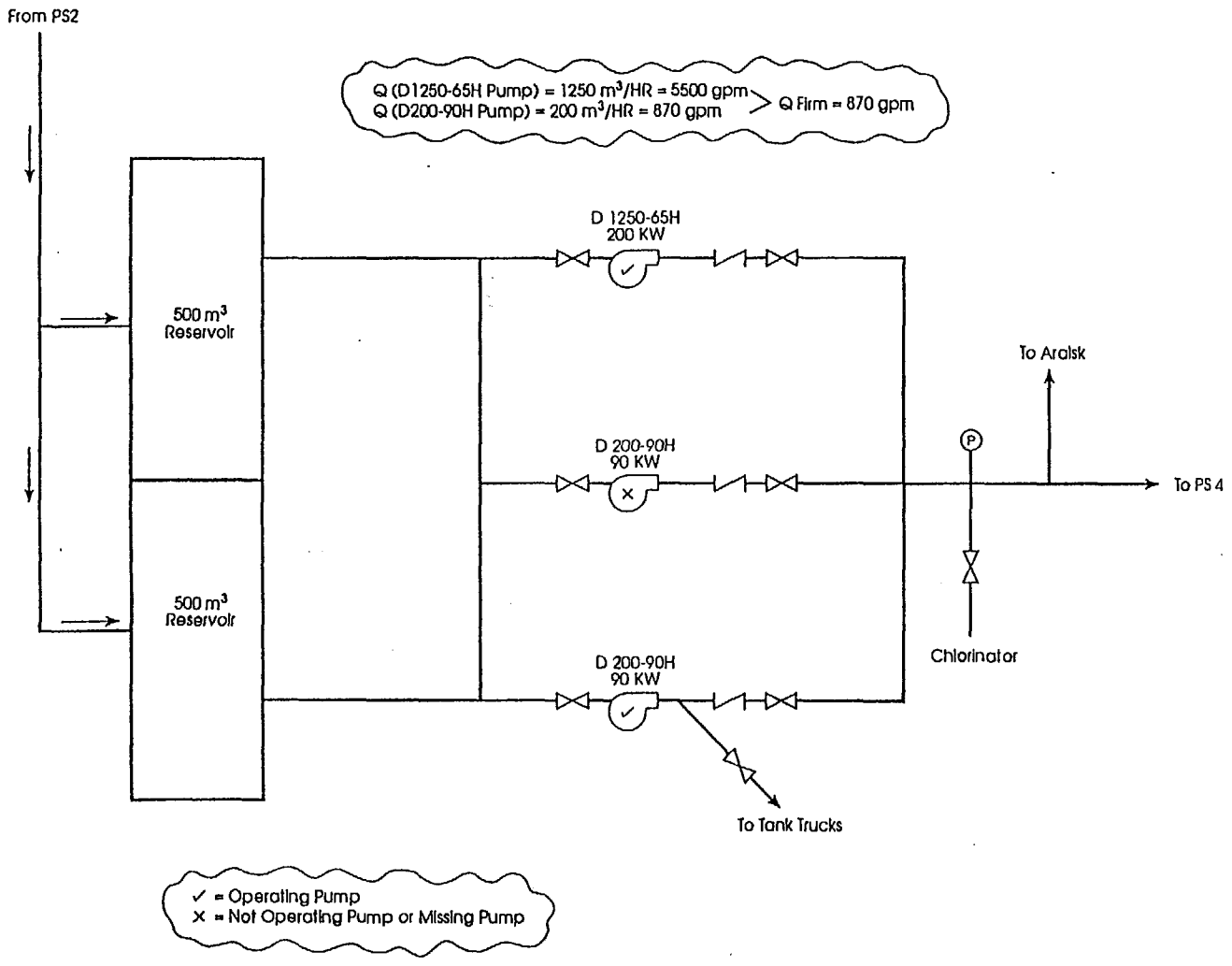

Figure 6
Pump Station 3

State of repair of the station was better than at PS 1 and PS 2. Although some windows were still broken, the building was in better condition; for example, the motor control panels were in better condition than at PS 1 and PS 2. As with other stations, few spare parts were seen and the pump pedestals needed repair.

Priority Improvements would include the following:

- Provide a new D200-90H pump and motor
- Repair pump pedestals
- Repair broken windows and doors
- Improve chlorination system (see Section 6)

5.5 Pump Station 4

PS 4 is located on the main highway in Aral-Kum, 38 kms south of PS 3. The station pumps to PS 5, 28 kms to the south. A flow schematic of this station is shown in Figure 7 (page 5-8).

The main transfer pumps are two D1250-65H pumps and one D200-90H pump. One of the D1250-65H pumps are not operating due to a missing motor. Firm capacity of the station based on the smaller of the two operating pumps is 200 m^3/hr (879 gpm).

State of repair of the station is better than stations 1, 2 and 3. The buildings were in much better condition – no broken windows, doors, etc. Pump pedestals were in better condition.

Priority improvements would include the following:

- Provide a new D200-90H to replace the D1250-65H, which is not working
- Improve chlorination system (see Section 6)

5.6 Pump Station 5

PS 5 is located on the main highway 28 kms south of PS 4 in the settlement of Kamyshlybash. The station pumps to PS 7, 54 kms to the south. This station also pumps to the Term 3 expansion area. A schematic of the station is shown in Figure 8 (page 5-9).

The main transfer pumps are one D1250-65H pump and one D200-90H pump. Both pumps are operational however the D1250-65H pump motor (55 kW) is reported to be overheating as its use is apparently restricted. Firm pumping capacity assuming operation of the smaller D200-90H pump is 200 m^3/hr (870 gpm).

The three K80-50H pumps are dedicated to pump water to the Term 3 expansion area. All three pumps were operational.

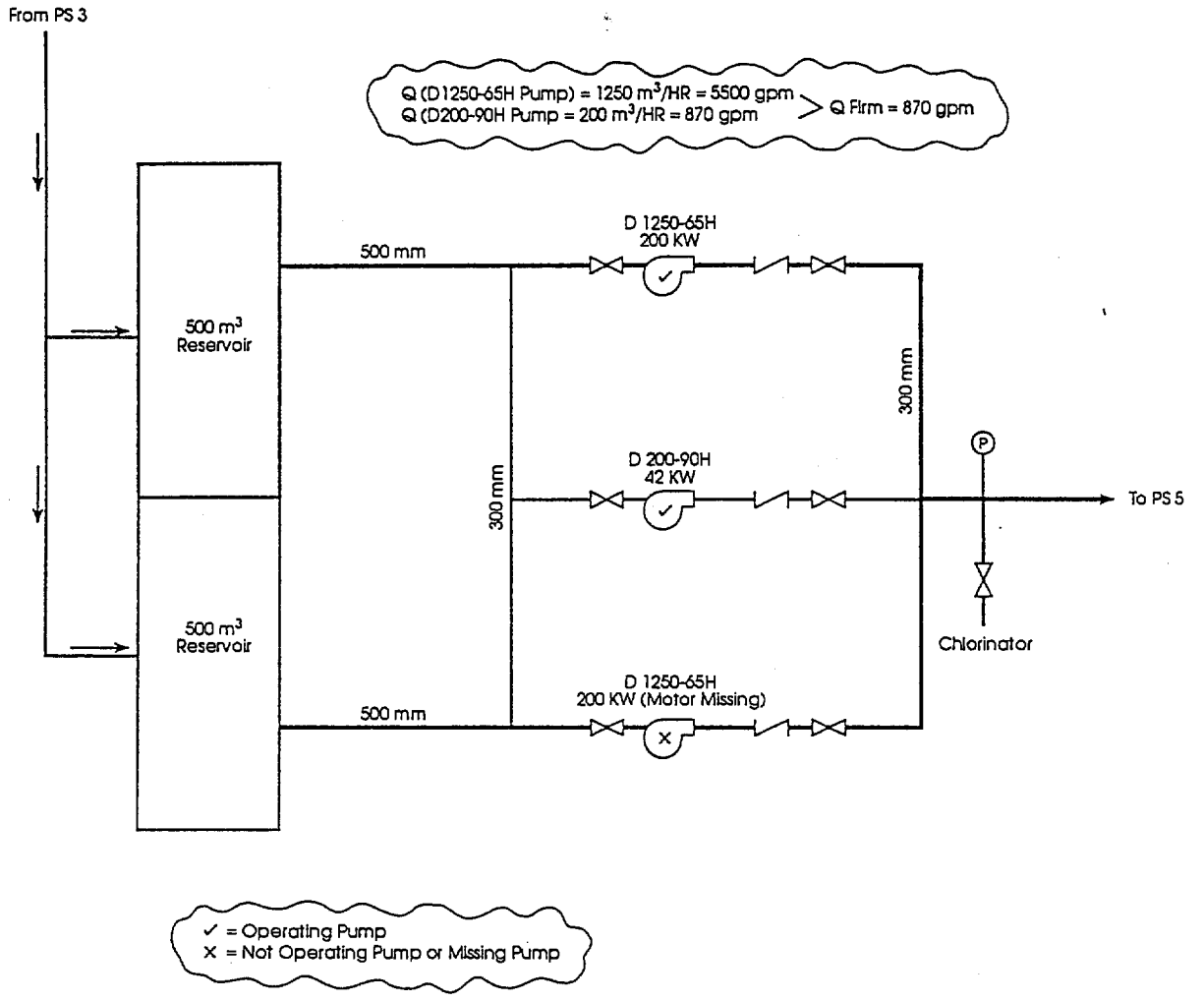

Figure 7
Pump Station 4 – Aral-Kum

24

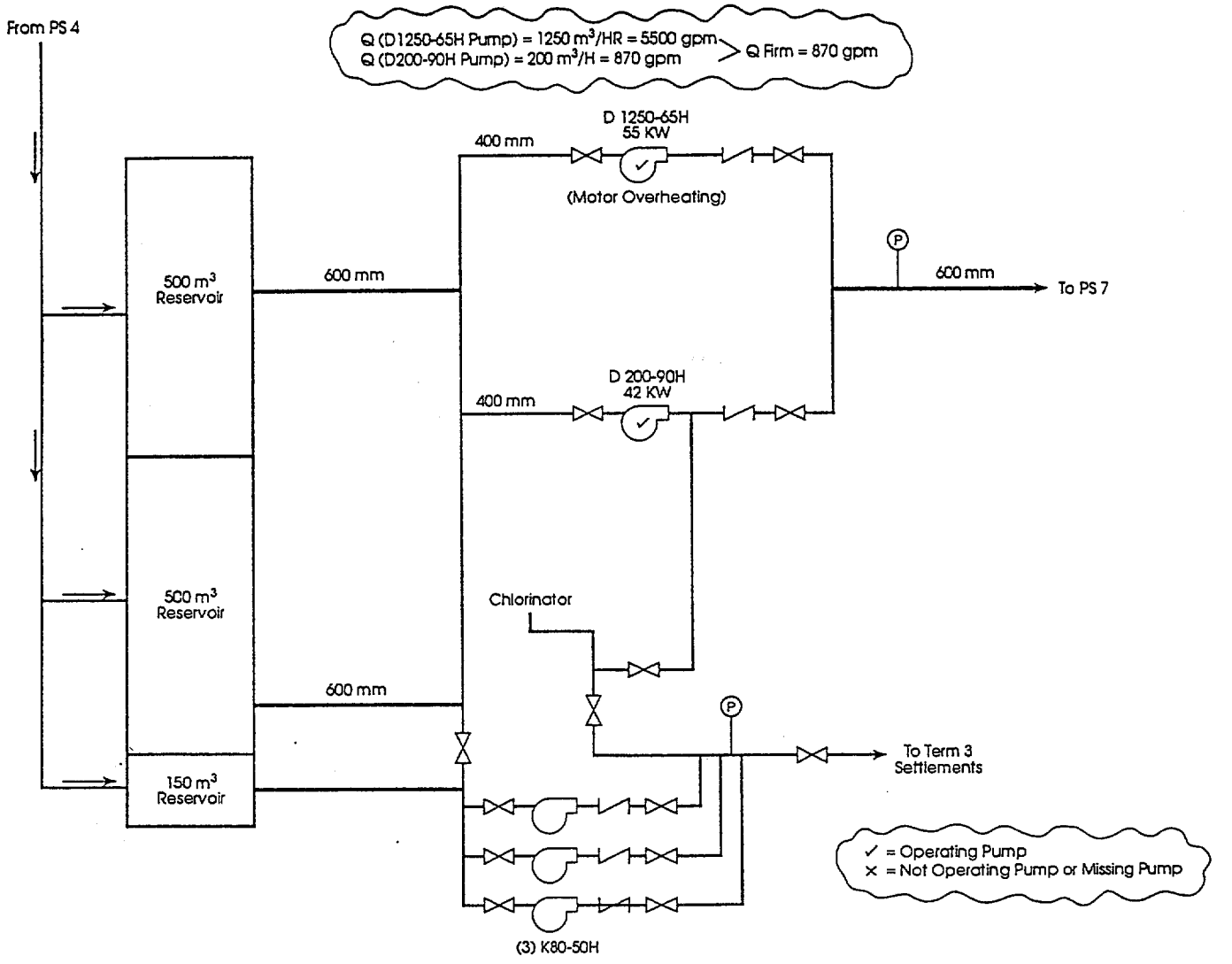

Figure 8
Pump Station 5 – Kamyshlybash

25

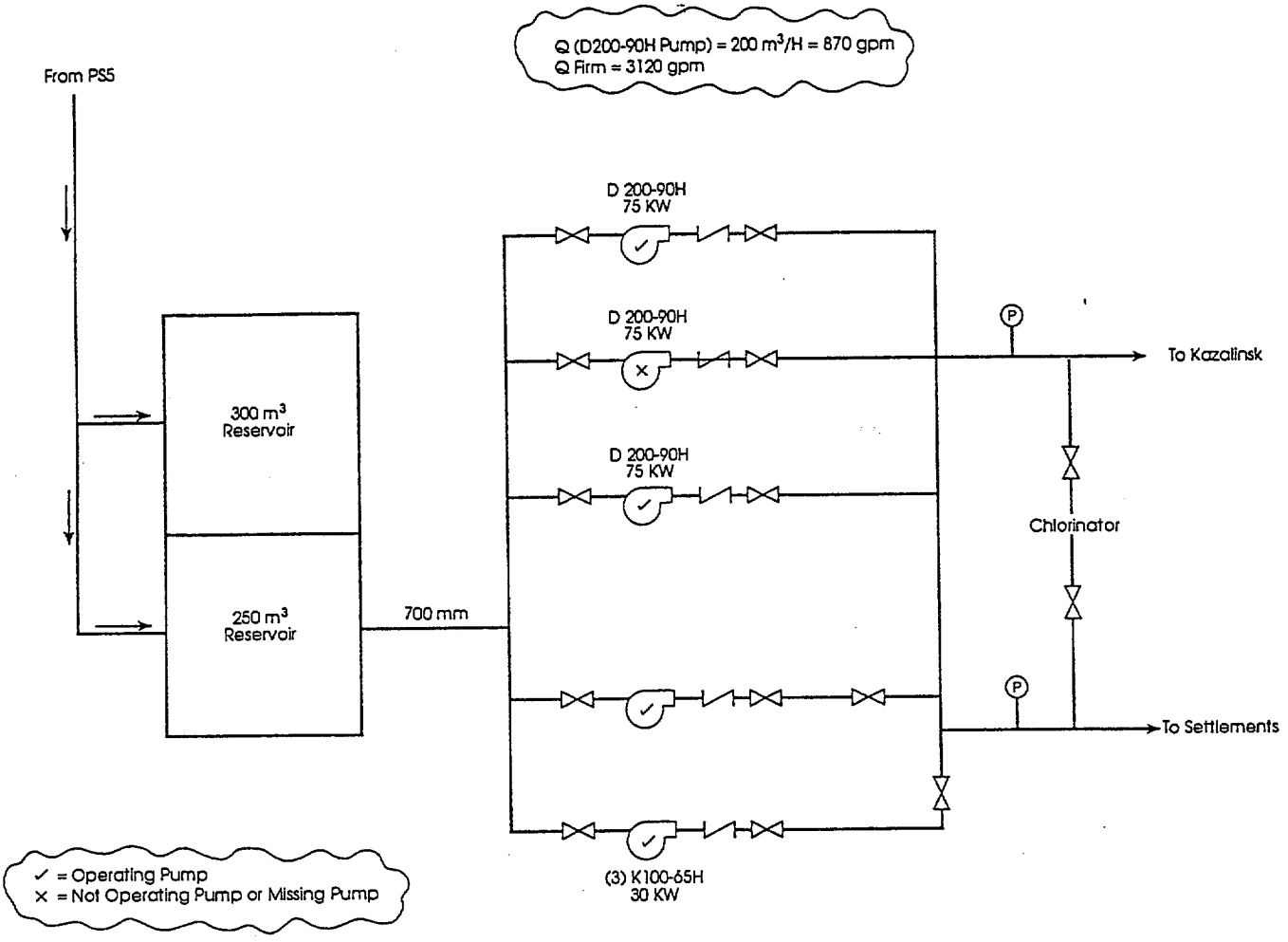

Figure 9
Pump Station 7– NovoKazalinsk

26

PS 5 is in a reasonably good state of repair. No building improvements were noted as needed.

Priority improvements would include the following:

- Replace the D1250-65H pump and motor with a new D200-90H pump and motor (demand not great enough to justify large pump).

- Improve chlorination system (see Section 6).

5.7 Pump Station 7

PS 7 is located in NovoKazalinsk and is the last station on the main transmission pipeline. This station pumps to Kazalinsk and several rural settlements around NovoKazalinsk. A schematic of the station is shown in Figure 9 (page 5-10).

The main transfer pumps in this station are three D200-90H pumps that pump to Kazalinsk. Only two of the pumps are operational due to bearing failure. Three smaller K100-65H pumps are used to pump water to the rural settlements.

PS 7 is in a reasonably good state of repair. No needed building improvements were noted.

Priority improvements would include the following:

- Provide new D200-90H pump and motor
- Improve chlorination system (see Section 6)

Section 6

Chlorination Facilities

6.1 General Description

The FWRC water system utilizes chlorine for disinfection. Chlorination feed equipment is installed at all six booster pump stations. However, none of the chlorinators were working at the time of the inspection, due to broken or missing components and due to a general lack of chlorine. The only functioning chlorination systems observed were at the city of Aralsk's pump station and at the NovoKazalinsk water plant; both the plant and the chlorination system were in a poor state of repair. PS 2 was the only pump station chlorination system working. However, it was down due to lack of chlorine. The system was started for observation by the inspection team, but it leaked chlorine gas excessively and was turned off.

The same type of chlorination system is used at each pump station. Figure 10 (page 6-2) shows a schematic flow diagram of a typical chlorination installation. It consists of a 70 kg-cylinder of chlorine laying on its side so as to extract the liquid chlorine. A zinc-coated copper line attaches to the cylinder and connects it to an expansion tank where the liquid chlorine is allowed to expand into a gaseous form. Chlorine gas flows through another zinc-coated copper line to a regulator prior to entering the mixing chamber. The chlorinated water from the mixing chamber is injected into the line that proceeds into the reservoir. The regulator model is a LONII-100k with a stated feed rate of 2.5 kg/hr.

The stated goal, expressed by the plant operator, is to maintain 0.3 mg/l residual in the reservoir. However, as noted above, the system is functioning with no chlorine residuals because none of the pump station systems are working, except for Aralsk.

Operators at each pump station were interviewed and the same basic problems were cited at each station. These problems are as follows:

- Unreliable supply of chlorine.
  - No budget for chlorine.
  - When ordering chlorine, payment to the distributor must be made in full.
  - One railway car of 288 empty chlorine cylinders must be sent back to the chlorine distributor before receiving chlorine.
  - 10 to 14 days after sending the chlorine bottles, chlorine is received at the railway station.
- The chlorinators have a life expectancy of 1.5 to 2 years with no spare parts available.

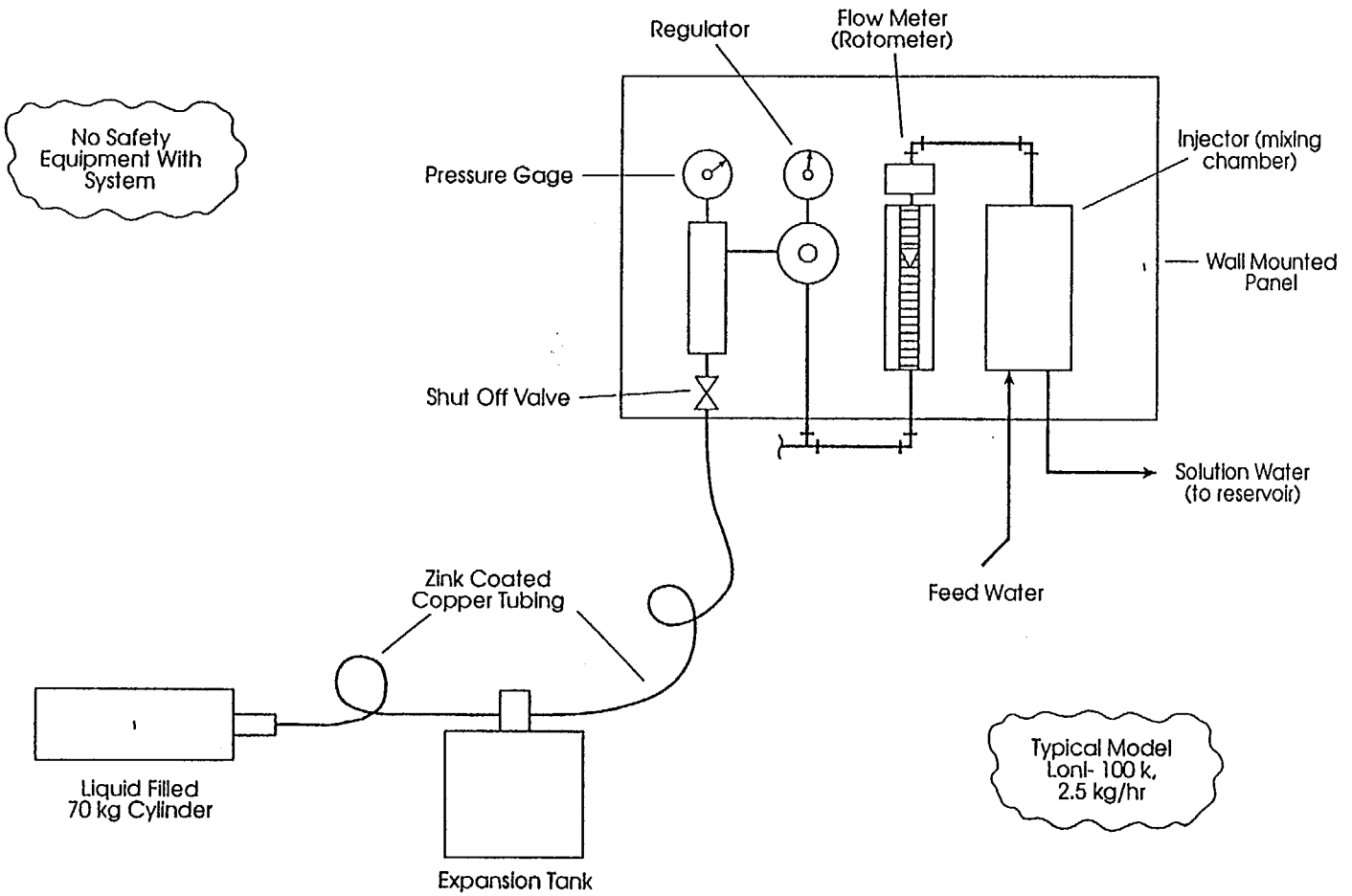

Figure 10
Typical Chlorination System

- All metal materials used in the system are supposed to be zinc coated. This is not the case. Many times the materials used are whatever is available at the time of need.

- Poor safety conditions.

  - Majority of the cylinders did not have a safety cap.
  - No safety equipment was present.
  - No working ventilation equipment was present.

- Poor building conditions.

  - All of the chlorine rooms were unheated with the windows either broken or not fitting properly with large gaps evident.

  - The doors were mainly made of wood planks with large gaps between planks and around the casings.

- No chlorine test equipment was provided at any of the pump stations. Aralsk and NovoKazalinsk did have test equipment.

6.2 Aralsk Chlorination Facility

The Aralsk chlorination facility was the only facility apparently on line and reliably chlorinating on a day-to-day basis. The chlorine room was well kept and operating as designed.

The operations staff monitors the residual chlorine in the reservoir on a routine basis, approximately every 30 minutes. The target is 0.3 mg/l. The distribution system chlorine residual is monitored two times per day. The Aralsk system uses approximately 30 bottles of chlorine per year.

Aralsk has a contract with Pavlodar[4] to supply chlorine. However, they have the same problems, as stated above, concerning payment, bottles sent by railway and turn-around time.

Safety equipment and procedures are non-existent.

6.3 Novokazalinsk Chlorination Facility

The NovoKazalinsk chlorination facility located at the river WTP was similar to the pump station facilities. The system was in a state of disrepair, but functioning. Operators cited the same problems as mentioned above.

---

[4]Pavlodar is believed to be a chlorine supplier.

6.4 Priority Improvements

Improvements to the disinfection systems are categorized as equipment needs, building improvements and operational/institutional changes.

6.4.1 Equipment Needs

Due to the poor state of repair of most of the chlorination equipment – corroded feed piping, broken or missing components, etc. – the chlorination feed systems in all of the pump stations should be replaced with new systems.

Conversion from a liquid-based system to a gas-based system should be evaluated. New equipment would include chlorinators and distribution tubing. Safety equipment is needed, including self-contained breathing apparatuses (known as SCBAs, masks with cartridges) and safety chains installed for the chlorine cylinders. Training should be provided for all equipment.

6.4.2 Building Improvements

Building improvements are needed to provide for general security, temperature control and ease of maintenance. Improvements should include repair of broken windows and doors and installation of ventilation equipment.

6.4.3 Operational/Institutional Changes

Operational/institutional changes are needed to provide for reliable sources of chlorine. Budgetary amounts need to be prioritized for the purchase of chlorine. Operators need to have more control over when and how they get chlorine. At present they are too dependent on the chlorine supplier who will come and pick up the empty cylinders only if an entire railway car full of cylinders (288 each) has been stockpiled. Turn-around time (10 days) is excessive.

One solution would be for operators to have a means of transporting cylinders to the chlorine supplier, rather than the supplier coming to pick them up – perhaps transport trucks. In light of the problems with chlorine supply, operational and/or institutional changes should be considered a prerequisite to making the other improvements such as the installation of new equipment and building repairs. Without a reliable supply of chlorine, new equipment or well-ventilated buildings will be of little benefit.

Section 7

Laboratory Facilities

7.1 General Description

There were two water quality laboratories in the area of study, one at the Aralsk pump station and one at the NovoKazalinsk WTP. Both laboratories were inspected for equipment and chemicals on-hand, and observed for tests performed. Between the two laboratories, there is a very wide gap in knowledge, tests performed and equipment/chemical availability. No laboratories were associated with the FWRC water system and no routine water quality analyses were conducted on the water.

7.2 Aralsk Laboratory

The Aralsk laboratory was very well kept and professional, with the staff very knowledgeable of the tests performed. The laboratory functions with a budget. The equipment is antiquated but functional and includes:

- pH meter
- Spectrophotometer
- Pan balance (2)
- Autoclave
- Vacuum pump (manual)
- Oven
- Furnace
- Water bath
- TDS meter (current meter is broken)

Tests that are routinely performed at the laboratory are listed n Table 1 (page 7-2).

Problems with the laboratory include:

- Equipment down-time due to no service of Soviet made equipment (no spare parts)
- No supply of pH electrodes for Soviet-made pH meter (current electrode is 3 years old)
- Availability of glassware
- Availability of chemicals

Table 1 Tests Routinely Performed at Aralsk Laboratory	
Parameter	**Frequency (desired)**
Bacteriological (coliforms)	1/day
Ammonia	1/month
Nitrites	1/month
Nitrates	1/month
Chlorides	1/month
Hardness	1/month
Oxidation	1/month
Sulfates	1/month
TDS	1/week
pH	1/day
Fluoride	1/month
Iron	1/week
Copper	1/month
Residual Chlorine	1/0.5 hour
Smell	6/day
Taste	6/day
Color (turbidity)	6/day

7.3 NovoKazalinsk Laboratory

The team did not evaluate the NovoKazalinsk laboratory in detail. However, it can be assumed that it conducts the same routine tests as the Aralsk laboratory. The laboratory at the NovoKazalinsk WTP consists of a Total Dissolved Solids (TDS) meter and apparatus to run chlorine residual. Identified priority needs included the following:

- pH meter w/spare electrodes
- Spectrophotometer
- Balance
- TDS meter
- Glassware
- Bulk chemicals

7.4 Recommended Laboratory Equipment for NovoKazalinsk and Aralsk

Recommended laboratory equipment for NovoKazalinsk is shown below in Table 2.

Table 2
Recommended Laboratory Equipment for NovoKazalinsk and Aralsk

Equipment	Analysis	No.	Unit Cost	Total Cost
Laboratory pH meter (Hach Model 44701 or equal)	pH, temp	1	$1,500	$1,500
Laboratory turbidimeter (Hach Model 2100N or equal)	turbidity	1	1,500	1,500
Laboratory spectrophotometer (Hach DR/2000 or equal)	Chlorine,	1	1,800	1,800
Portable pH,mv/temp meter (Baxter Model 250A)	pH, temp	2	1000	2,000
Portable Turbidimeter (Hach Model 2100P)	turbidity	2	1,000	2,000
Portable Coliform Laboratory (Hach 25697 MEL MF)	Coliforms	1	3,200	3,200
Pocket Colorimeter (Hach 46700-00)	Chlorine	1	300	300
Burets & Glassware	Alkalinity	1	200	200
Reagents (2-year supply)			2,500	2,500
Subtotal Equipment FOB U.S.				$15,000
Shipping (Surface)				5,000
Total				$20,000

Section 8
Urban and Rural Distribution Systems

Two urban distribution systems, Aralsk and NovoKazalinsk, were evaluated. A smaller system exists within Kazalinsk but was not evaluated. Problems within Kazalinsk can be assumed to be similar to the problems discussed below for Aralsk and NovoKazalinsk. The only rural system evaluated was the Term 3 expansion area of the FWRC system.

8.1 Aralsk

Aralsk operates a distribution system pumping station that has its suction intake from the FWRC pipeline. Interviews with rayon officials indicated that they had reliability problems with receiving water from FWRC pipeline.

The distribution system consists of approximately 67 kms of steel pipes installed in the early 1960s. The system was reported to be corroded and leaking. City officials estimate that in excess of 40 kms of this system need to be replaced. A total of 8 kms of pipe have been identified as priority replacement sections. However, there were no designs or estimated costs for the project.

According to city officials, the design of water pipelines is under the Oblast Division of Communal Affairs Design Institute. These designs were requested by the city in 1990. However, no action has been taken.

At a meeting with the city officials, they listed several priorities as follows:

- Completion of a new pumping station at the existing Aralsk pump station
- Replacement of up to 40 kms of the existing distribution system
- Supply of heavy equipment for augmenting the maintenance of their system
- Improvements to the Kosaman and Berdykol wellfields, pumping stations and transmission pipeline to ensure reliable delivery of water to Aralsk

8.2 NovoKazalinsk

NovoKazalinsk pumps water from its treatment plant into its distribution system. The system was constructed in the early 1960s and consists of approximately 60 kms of steel pipe. It is reported to be in poor condition. A rough map of the distribution system was obtained. However, there is no pipe size information or distribution system inventory available.

System pressure is maintained at approximately 1 atmosphere (14 psi) to avoid pipeline ruptures and leaks. Operations staff were of the opinion that essentially the entire system will require replacement.

At a meeting with city officials, they listed several priorities for the system:

1. Complete the new pump station (adjacent to PS 7) in order to connect to the FWRC system.

2. Construct a pipeline extension of 5 kms from the new pump station to an area of poor service for 14,000 people. However, no details for design and construction were available.

3. Obtain support for system O&M. Adequate funding is not provided from the oblast or Kazakhstan federal government.

4. Replacement of up to 55.5 kms of the existing distribution system.

8.3 Term 3 Rural Distribution System

Term 3 is part of the master plan for expansion of water supply to rural settlements within the Aral Sea disaster zone. The area is located northwest of NovoKazalinsk between the Aral Sea and the FWRC pipeline, as shown in Figure 2. There are approximately 14 settlements within the expansion area. Completion of the expansion is identified as a priority project by FWRC officials.

An overall layout of the area is shown in Figure 11 (page 8-3). Water is supplied from PS 5 on the transmission pipeline. Approximately 70 kms of pipe have been installed to date, as shown in Figure 11. However, only the first 28 kms are operational. The entire project includes about 140 kms of pipe.

Two pump stations have been completed, PS 1 and PS 2, with temporary power supply. A permanent power supply will require installation of approximately 30 kms of electrical transmission cable.

Oblast officials have identified a 41-km priority section of the Term 3 expansion. This project includes six new pump stations as well as equipping one partially constructed pump station (PS 8) with pumps, motors and electrical switch gear. Also included in this project is completion of a bridge crossing, approximately 250 meters in length. A detailed bill of quantities and cost estimates of the proposed project were not available from the oblast. Estimated requirement of PVC pipe for the proposed 41-km project was identified, as shown in Table 3 (below).

Table 3
Estimated Requirement of PVC Pipe for Term 3

Diameter (mm)	Length (m)
315	7,540
225	8,880
150	25,100

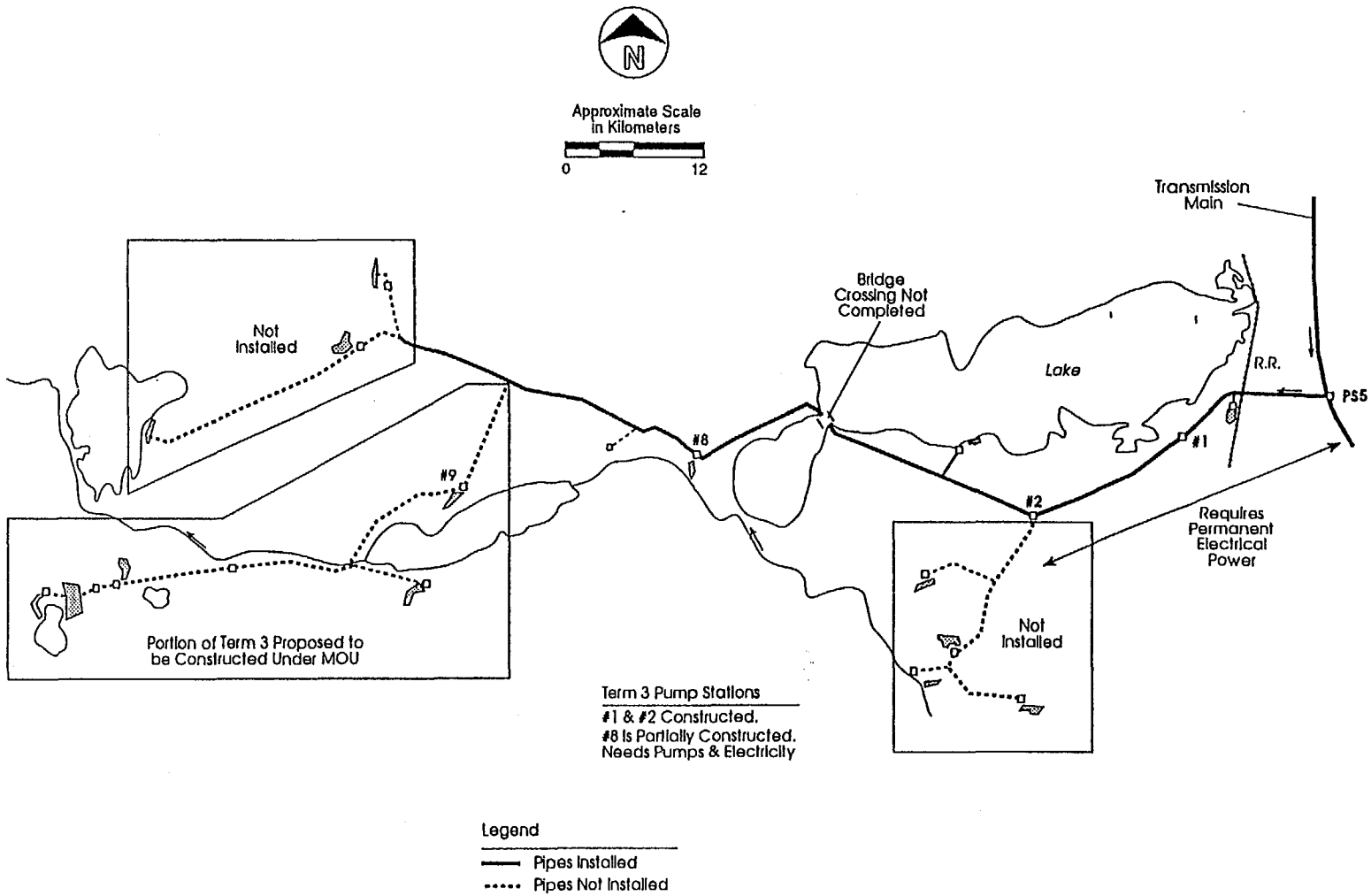

Figure 11
Term 3 – Rural Pipeline Extension

57

Section 9

Recommendations

9.1 Summary

The following recommendations have been developed as priority projects based on the field investigations. They should be implemented as soon as possible.

9.2 Laboratory Equipment

Provide laboratory equipment to the existing laboratories in Aralsk and NovoKazalinsk in order to improve water quality monitoring of the water distribution system. This would include equipment, reagents and glassware, and the associated training.

9.3 Chlorination Equipment

Provide chlorination equipment, technical assistance and training for the following locations:

- PS 1 and PS 2 in the wellfields
- PS 3, near the city of Aralsk
- PS 5 near the rural settlements
- The present WTP serving the city of NovoKazalinsk

9.4 Equipment and Assistance in the Wellfields

Provide equipment and technical assistance in the wellfields to upgrade the vertical turbine pumps in the water wells. For example, only 21 of the 38 wells in the two wellfields are operational and few spare parts are available. The following is recommended:

- 18 new pumps (11 lps) and motors (25 hp)
- two mobile electric generators (500 kW)

9.5 Equipment and Assistance at Pump Stations

Provide equipment and technical assistance at PS 1 and PS 2 at the wellfields, as follows:

- Provide PS 1 with two pumps (400 lps and 90 lps) and two motors (260 hp and 20 hp)

- Provide PS 2 with two pumps (100 lps and 50 lps) and two motors (175 hp and 40 hp)

Appendix A
Trip Itinerary

May 1994

22 Arrived Almaty in A.M.: met with Paul Dreyer, then rested.

23 Planning committee with Dreyer. A.M.: meeting with Water Resources Committee and Design Institute.

24 Meeting with USAID/Almaty. A.M. Flew Almaty/Kzyl Orda. Late meeting with First Deputy and several members of Oblast administration.

25 Morning meetings with engineering staff and plan for departure to Kazalinsk. Departure 1400 hours, arrival 1930 hours.

26 Visits with Novokazalinsk officials and inspection of PS 7 and pumping station under construction by Rayon. Reviewed information concerning distribution system and other needs. Both teams overnight in Kazalinsk.

27 0900-1100 hours, visit to plant at river. Travel to Aralsk with visits to PS 5 and PS 4 on the route to Aralsk. Both teams in Aralsk, P.M.

28 Team A to PS 1, PS 2 and wellfields. Team B meetings with Aralsk representatives and Water Canal. Both teams overnight in Aralsk.

29 Team A inspected Aralsk chlorinators and laboratory, and inspected PS 3 in Aralsk. Team B traveled from Aralsk for inspection of Term 3. Late arrival in Kazalinsk.

30 Team A traveled to Aralsk/Kazalinsk; Team B in Kazalinsk, met with Rayon administration. Afternoon, both teams traveled to Kzyl Orda.

31 Kzyl Orda: Met with Kzyl Orda administration and engineering staff.

June 1994

01 Airport for flight to Almaty, flew late, arrived Almaty late afternoon.

02 Debrief with Dreyer in Almaty.

03 Meeting with USAID in Almaty.

04 Drafted report in Almaty.

June 1994 / continued

05 Drafted report in Almaty.

06 Review with Dreyer and USAID/Almaty in Almaty.

07 Departed Almaty to United States.

Appendix B
Principal Persons Interviewed

Kzyl Orda - "Aral" United Directorate for Construction Enterprises (UD)

1. Nazhmaddin Musabayev - Deputy Head, Kzyl Orda Oblast Administration

2. V.G. Shek - Chief Engineer (UD), accompanied teams on field trip

3. B.S. Arystanbayev - Deputy Head, Experimental Amalgamation for Construction (EAC)

4. Victor S. Morozov - Head, Industrial Amalgamation for Construction; telephone: (32422) 76110 (0)/74922 (h)

5. Daulet Bayalimov - Chairman, Committee on the Aral Sea Problems, Kzyl Orda Oblast Administration; telephone: (32422) 77357 (0)/78281 (h); accompanied teams on field trip

Kazalinsk

1. Imandosov - Head, Kazalinsk Rayon Administration

2. Nagmetali Kadyrkulov - Head, NovoKazalinsk Administration for Water Pipeline and Sewerage System (WPSS)

3. Orazgali Bekbanov - NovoKazalinsk Mayor

4. Tehtis Buharbayev - City Architect

Aralsk

1. Ahmettola Umbetov - First Deputy Head, Aralsk Rayon Administration

2. Bolatbek Pusurmanov - Deputy Head, Aralsk Rayon Administration

3. Kudaibergen Bakhtibayev - Chief, "Aral-Ssarybulak" Pipeline

4. Bahytzhanov Bazhikov - Chief Engineer, Water Canal

5. Ayazbay Mahanov - Head, Aralsk Department of Water Pipeline and Sewage (Water Canal)

6. Zhubathan Baynazarov - Rayon Architect

Appendix C

Logistics Problems in Kzyl Orda Oblast

General Assessment

Previous missions visiting Kzyl Orda, Kazalinsk and Aralsk have been escorted by representatives from the oblast administration and "sheltered" from the reality of the difficult living conditions in the Aral Sea area. Short- and long-term teams assigned in Kazalinsk and Aralsk will be hindered by the lack of food supplies, adequate housing, communications, fuel shortages, poor medical facilities and transportation problems.

Prior to initiating project activities in Kazalinsk and Aralsk, serious consideration must be given to furnishing adequate housing, food and water supplies, communications, transportation and sanitary facilities for EPT Project employees to be based in the Aral Sea area within Kazakhstan.

These areas are very remote. There are no stores and shops and the markets are poorly supplied. A source of safe drinking water is a major problem, and bottled water is scarce and food is only available through the guest house.

Kzyl Orda

Kzyl Orda is over 2 hours by air to the west of Almaty. Trains are available, but the trip takes 1.5 days travel time. Travel by road from Almaty to Kzyl Orda is about 12 hours; however, it is not recommended because of fuel availability and poor road conditions.

Kzyl Orda is located 330 kms east of Kazalinsk, 5 to 6 hours by road. Aralsk is 110 kms, 1.5 hours north of Kazalinsk. No public facilities are available along roads. There are no airports located in Kazalinsk and Aralsk.

Air travel to and from Almaty is limited because there is only one flight per day on a small jet (approximately 35 seats).

Transportation (Vehicles)

Teams were supplied vehicles through the Kzyl Orda administration and were accompanied by their representatives. The teams were hampered by scheduling and logistics difficulties in providing adequate arrangements for rooms in both Kazalinsk and Aralsk. Fuel availability was a problem in both Kazalinsk and Aralsk.

Future teams should have project vehicle(s), drivers and interpreters to avoid dependence on the Kzyl Orda administration. However, freedom of movement and scheduling of accommodations will be a problem without some oblast representation.

Accommodations

In Kzyl Orda, a government guest house is the only accommodation available. There is limited room availability, approximately 15 rooms, with a restaurant in the guest house. It is the only source of food and drink. Rooms have baths and toilets, but no hot water. The water source at the guest house is from a nearby well and the water appeared clean, but the quality is unknown.

NovoKazalinsk

No suitable housing appears to be available for project teams.

The only accommodation was one government guest house, approximately 24 rooms. Facilities are basic and availability of rooms is limited. Sanitary facilities are not available, outhouse only. No baths are available, but some rooms have a wash basin. Food is limited to local fare, which is a basic rice dish with a small amount of meat or a barley dish with meat patties, and local bread provided from the guest house canteen. Bottled water was scarce and the water supply is from the distribution system. This water source is from the Syr Darya, which is contaminated.

Aralsk

No suitable housing appears to be available for project teams.

The only accommodation available was in a government guest house, approximately 36 rooms. Rooms in this guest house did have baths with running water and toilets, but no hot water, and heating during the winter months is very poor. Food was limited to the guest house restaurant, with basic fare similar to NovoKazalinsk. The drinking water is from the local distribution system; bottled drinking water is not available. Drinking the water is not recommended.

Communications

Telephones are available, but the system is limited to booking calls through the operator with government "connections." Calls are limited to Kzyl Orda and were not reliable.

Medical Facilities

There are none up to our standards.

Access to Wellfields, PS 1 and PS 2

The wellfields are situated in remote areas. They are 110 kms from Aralsk and along 50 kms of desert roads, only accessible by jeep and four-wheel-drive vehicles. Any activities in the wellfields, PS 1, PS 2 and long the transmission main will be difficult to execute.

Appendix D

Letter from Kazalinsk Rayon

HEAD of the Kazalinsk Rayon [territorial administrative subdivision] **Administration, Kzyl-Orda Oblast** [administrative district], **Republic of Kazakhstan**

468210, Village of Novokazalinsk, Lenin Street

No. 205 May 28, 1994

ORGANIZATIONAL QUESTIONS
for the effecting of measures for the improvement
of the water supply of the population of the Kazalinsk Rayon

In accordance with the Memorandum of Mutual Understanding between the government of the USA and the government of the Republic of Kazakhstan of March 17, 1994, concerning drinking water supply systems and public health education in the Aral'sk and Kazalinsk rayons of the Kzyl-Orda Oblast, the Kazalinsk Rayon Administration hereby requests assistance in the solution of the following problems.

1. The second phase of the third startup facility of the Aral-Sarbulak group water supply line was put into operation in the third quarter of 1993. However, the residents of the village of Novokazalinsk are not benefiting from high-quality drinking water as a result of the incomplete and suspended construction of the pumping station of the third rise due to the lack of funds. For speeding up the delivery of drinking water, the possibility of the reconstruction of pumping station number 7 currently in operation in the village of Novokazalinsk, with the use of the "chlorinator" building and the two reservoirs of the pumping station of the third rise currently under construction, each with a capacity of 3600 m^3, with the allocation of the necessary funds, should be considered.

2. For providing an uninterrupted supply of drinking water for the population of the area, the modernization of the installed pumps along the entire course of the Aral-Sarbulak group water supply line should be performed.

3. The water supply system within the village of Novokazalinsk, which has been in operation for more than 35 years without major repairs or reconstruction, is on the verge of breakdown. Under the prolonged effects of corrosive subsoil water, the pipelines have undergone corrosion, and the leaking in of underground sewage due to the multitude of leaks has caused an increase in the incidence of infectious diseases. Please allocate funds for the reconstruction of the water supply line systems of the village of Novokazalinsk, which have a total length of 55.5 km.

BEST AVAILABLE DOCUMENT

45

4. For providing quality drinking water for the third of the population of the village of Novokazalinsk who reside in the area beyond the town limits, please allocate funds for the construction of a water supply line with a length of 5.3 km. Design and budget estimate documents are available.

5. Electric power is supplied to pumping station number 5 at the Kamyshlybash station by a temporary system via a transformer substation at the Bekbauli station, which does not have a capacity designed for the facility in question. For providing an uninterrupted supply of drinking water for the population of the Kazalinsk Rayon through the Aral-Sarbulak group water supply line, funds should be allocated for the completion of the assembly of equipment and for setup and startup operations for the transformer substation of pumping station number 5 which is currently under construction.

6. The operation of the Aral-Sarbulak group main water supply lines and water supply facilities at six populated sites of the rayon is carried on by the newly opened Kazalinsk Operating and Repair Section of the "Kzylordasel'khozvodoprovod" [Kzyl-Orda agricultural water supply line] Trust of the "Kzylordamelioratsiya" PSEO ["Kzyl-Orda development" mobile sanitary-epidemiological detachment]. However, the lack and lack of availability of the necessary transportation and construction equipment and supplies is having a negative effect on maintenance and the performance of needed repairs for the facilities in question.

Please allocate funds for the development of the base of materials and equipment of the Kazalinsk repair and operating section KhREU-2 and provide the necessary stock of construction and transportation equipment.

7. Funds should be allocated for the construction of the fourth and fifth phases of the Aral-Sarbulak group water supply line.

Head of the
Rayon Administration

[signature]
S. IMANDOSOV

BEST AVAILABLE DOCUMENT

46

Appendix E

Letter from Aralsk Rayon

HEAD of the Aral'sk Rayon Administration, Kzyl-Orda Oblast, Republic of Kazakhstan

468110, City of Aral'sk, Shketnaja Street 33

No. _____ May 28, 1994

ORGANIZATIONAL QUESTIONS
in regard to rendering critical aid
for improving problems of the water supply
of the Aral'sk Rayon as of May 28, 1994

The administration and the public of the rayon wish to express sincere gratitude to U.S. Ambassador W. Courtney for assistance in the signing of the Memorandum on the improvement of problems of the water supply to the population of the city of Aral'sk and the adjacent area.

I also urge you in the allocation of funds to pay particular attention to the following questions.

1. In regard to the Berdikul' and Kosaman water supplies;

- funds should be allocated for the construction of a road for 120 km along the water supply line;
- a second 110-kV power line should be constructed;
- a 2000 kW mobile electric power station should be acquired for the independent operation of the water supplies;
- four transfer pumps at the water supplies with a power of 500 to 2000 kW should be replaced;
- an emergency reserve of 30 well pumps should be established.

For the uninterrupted work of the operating organization, assistance should be provided in the acquisition of 2 excavators, 2 diesel welding units, 1 bus, 2 water carrier trucks, and 4 water disinfecting systems.

BEST AVAILABLE DOCUMENT

2. In regard to the water supply of the city of Aral'sk:

The distribution systems in the city of Aral'sk have a length of 67 km, of which 40 km is on the verge of failure; a total of 131 km of water distribution lines is needed. Design and budget estimate documents are available at present for the construction of 8 km of the water supply line system and the major repair of 8 km. Of the two main pumping stations, one is on the verge of failure with more than 30 years in operation, while the second is inoperative due to the lack of 5 pumps, other equipment and a transformer substation.

In connection with this, in the allocation of funds, please consider the following questions.

1. The outfitting, setup and startup of a second pumping station should be included in the plan.

2. The construction of 8 km of the water supply distribution system and the major repair of 8 km of the existing system should be performed.

3. Assistance should be provided in the acquisition of the following:

- a water disinfecting system facility;
- 2 excavators;
- 2 water carrier trucks;
- 2 diesel welding units.

3. In regard to the completion of the third phase of the construction of the Aral-Sarbulak water supply line:

- funds should be allocated for putting into operation the Kambash-Koszhar-Amanutkul'-Bugun' water supply line, the construction of which is 97% complete;
- funds should be allocated for the construction of the Bugun'-Akkudak-Karateren'-Zhanakurlys water supply line. The design and budget estimate documents are with the management of the "Aral" enterprises under construction.

4. In regard to the water supply for populated sites located in the northwestern part of the Aral Sea:

In connection with the limited funds which have been allocated, no water supply line will be constructed to the populated points of Akbasty and Kulandy.

Therefore, for satisfying the requests of the population, please allocate 6 water supply lines and 2 irrigation units for supplying the populated points in question with drinking water.

Head of the Aral'sk
Rayon Administration

[signature]
B. Kayupov

BEST AVAILABLE DOCUMENT 46

New Independent States (NIS)

★ **EPT Regional Offices**

The Environmental Policy and Technology (EPT) Project: Environmental degradation and natural resource mismanagement threaten public health, biodiversity and economic vitality in the New Independent States (NIS). To assist the NIS in alleviating these problems, the U.S. Agency for International Development (USAID) began the EPT Project in 1993. EPT provides technical assistance and policy advice in the environmental sector and promotes environmentally sound economic development through public and private, U.S. and NIS partnerships. The EPT Project is managed by USAID with support from the U.S. Environmental Protection Agency (USEPA). For assistance in project design, management and implementation, USAID has agreements with CH2M HILL International, Harvard Institute for International Development and ISAR. As the primary EPT contractor, CH2M HILL International has the lead role in delivering technical assistance, logistical support and policy support for selected projects. EPT Regional Offices are located in: Washington, D.C.; Moscow, Russia; Kiev, Ukraine; and Almaty, Kazakhstan.

CH2M HILL International Consortium of Subcontractors: Center for International Environmental Law; Clark Atlanta University/Historically Black Colleges, Universities and Minority Institutions Technology Consortium; Consortium for International Development; Ecojuris; Environmental Compliance Inc.; Harvard Institute for International Development; Hughes Technical Services Company; International Programs Consortium; International Resources Group; Interfax; K&M Engineering; Ogden Environmental and Energy Services; Price Waterhouse; the World Wildlife Fund; and numerous local subcontractors and cooperators throughout the NIS.

Environmental Policy and Technology Project
A USAID Project Consortium led by CH2M HILL

CH2M HILL International Services, Inc.
P.O. Box 24548, Denver, Colorado 80224 U.S.A.