PN- ACA-533
93852

WATER SYSTEM DESIGN SEMINAR

MAY 14 AND MAY 15, 1996

PRESENTERS:

DANIEL GALLAGHER, P.E

AND

FRED ZOBRIST, P.E.

SPONSORED BY:

USAID/WEST BANK AND GAZA

AND

UNDP JERUSALEM OFFICE

CONTRACT NUMBER:
HNE-0159-C-00-3080-00

MANAGEMENT SYSTEMS INTERNATIONAL

1

WATER SYSTEM DESIGN SEMINAR

PART I

REPORT ON SEMINAR HELD ON

MAY 14 AND MAY 15

1996

AT

BEIR ZEIT UNIVERSITY

SPONSORED BY

USAID/ WEST BANK AND GAZA

AND

UNDP JERUSALEM OFFICE

2

CONTENTS

PART I - WATER SYSTEM DESIGN SEMINAR

CONTENTS

PART 11 - HAND OUT MATERIALS

4

WATER SYSTEM DESIGN SEMINAR

Background

USAID is currently financing the construction of water networks for a number of villages and municipalities on the West Bank. Deficiencies were observed by USAID in recent water network design related to hydraulic efficiency and the use of costly materials. Specific examples include:

- use of costly pipe materials has contributed to under sizing water mains and laterals

- many undersized lines are classified as "service lines" and designated as branch lines rather than as elements of a "looped" network grid

- concern about intermittent water flow has contributed to a practice of designing reservoirs to "directly feed" rather than more efficient "floating" reservoirs

- inappropriate pipe materials contribute to high losses in the networks

- the hilly terrain in many areas often result in high system operating pressures resulting in huge losses

- design drawings lack minimal basic data with which to evaluate the adequacy of the design

To assist with reducing these problems and improving the design process of local engineers USAID and UNDP sponsored a two day seminar to introduce modern design practices and computerized hydraulic network design concepts. Included were alternative pipe uses and cost concepts. Appendix A provides a copy of the schedule and appendix C the target scope-of-work.

USAID provided a team of two senior engineers with broad experience in the water supply sector, while the UNDP provided for the training facilities and selected the participants. Beir Zeit University was selected because of its large computer laboratory.

A total of 19 participated in the seminar including USAID representatives. Each was given a disk with a copy of EPANET. A list of the attendees is included as appendix B.

Participant Reactions

The participants were very enthusiastic and involved during the seminar. A great number of questions were asked and discussions and dialog ensued. The participants were aware of some

of the topics presented, such as floating storage tanks and hydraulic modeling analysis. Class discussion involved how to implement these within the concerns and limitations of water availability on the West Bank. Some of the concepts, such as pressure zones for hilly terrain, seemed new to the class. Discussion took place on how this approach could benefit their designs.

Software Programs

The main focus of computer portion of the class was EPANET, the USEPA's dynamic hydraulic model. This program, including its on-disk manual was distributed to each of the participants. Complimentary programs also given out were NOTEBOOK, an improved text editor for EPANET data file creation, and ZIP and UNZIP, programs for compressing and expanding groups of files.

Besides the example data files that are packaged with EPANET, several more were prepared, distributed, and analyzed during the course. These were designed not only to illustrate EPANET, but also to point out appropriate design standards and practices. The data files included an example of pressure zones, an example of how storage tanks are implemented in EPANET, an example of floating storage tank design, and a case study of the village of Fasiyal. This example was used to explain standards for headloss, velocity, and pressure that can be checked and designed for using hydraulic modeling. It was also used to illustrate the effects of different pipe materials on system hydraulics. A final example was created during the class to ensure that the participants knew how to prepare EPANET data files.

A second design program BR2 was distributed and discussed in the course but not demonstrated. This program is for the optimal design of branched water distribution system and automatically selects pipe diameters to meet pressure constraints.

A brief demonstration of a GIS (geographic information system) was presented that included a comparison of this technology with CAD and the use of GIS in planning.

A presentation of AutoCad had been planned but was not conducted because of computer software limitations and time constraints.

Pipe Materials and Costs

The session on alternative pipe use brought out strong prejudices against using plastics and poly's, although did appear to broaden their knowledge base. AWWA research materials and specifications were provided on the uses of these types of pipe. Also discussed were examples and standards being used by U.S. utilities for pipe laying and system design. Also discussed was the requirements for basic construction drawings. Supporting handouts were also provided.

The review of costs showed an area of weakness of the participants as life cycle costing and

b

alternative cost analyses are not currently being incorporated into their design and planning processes. However, they showed great interest and noted that they would like additional training on the subject.

Materials Distributed

In addition to the software listed above, the following copies were distributed to the participants or provided to UNDP personnel for reference and later distribution as desired.

A paper copy of the EPANET manual (see part II).
The initial maps and data sets for the Fasiyal case study.
Directions for installing EPANET
Course notes (see part II)
AWWA Manual 31: Distribution requirements for fire protection
AWWA Manual 32: Distribution network analysis for water utilities
AutoCad for Dummies, IDG Press, ISBN 1-56884-141-4, 1996.
Various related documents on alternate pipe, standards and costs (see part II)

A copy of each of the materials provided as handouts to all participants is included in Part II.

Conclusions and Recommendations

The USAID goals of introducing computerized network design concepts were fully met and accepted by the participants. Participant feed back was positive and they, in general, expressed the need for follow up and for additional seminars and workshops. This expression included the need for more information on cost analyses and consideration of additional subjects. They also expressed a need for study tours to review more developed utilities and their practices.

The participants were provided background materials and software on EPANET a popular design tool among consultants and materials on alternative pipe materials, standards and construction drawing requirements. The handout materials were popular and well received. A copy of the handouts provided in the course are included as Part II of this report.

It was clear that the majority of the class participants were interested in this technology and were willing to think about using it in improving their current design practices. The seminar was successful in generating this interest and whetting their appetite. There was not time to fully teach the participants all they needed to know to implement hydraulic modeling analysis in their standard designs. Further training that works with the design engineers and implements a complete design for one of their systems would be valuable - particularly a training session that shows how hydraulic modeling can allow for numerous alternative designs to be examined with little effort and in a relatively short time.

The level of basic engineering skills of the participants was uniformly high. The level of computer skills was more variable. Future seminars may want to limit participation to those comfortable with computers or provide an optional session on basic computer training for those who need it. The lack of adequate English among the participants was not apparent except in one or two cases.

Training in economic and financial analyses of water projects should also be included as costs, especially life cycle, have a major impact on design considerations.

WATER SYSTEM DESIGN SEMINAR

Day 1

Tuesday, May 14, 1996

8:30 - 9:00 am	Registration
9:00 - 9:30	Welcome and Overview
9:30 - 10:30	Hydraulic Analysis: headloss formulas, storage, valves
10:30 - 10:45	Break
10:45 - 11:30	Hydraulic Analysis: pumps, pump curves, distr. systems
11:30 - 12:00	Software Overview (computer lab)
12:00 - 12:30 pm	Branched distribution system design (computer lab)
12:30 - 1:30	Lunch
1:30 - 3:00	EPANET: requirements, installation, and demonstrations (computer lab)
3:00 - 3:15	Break
3:15 - 4:30	EPANET: case studies, design in hilly areas (computer lab)

Day 2

Wednesday, May 15, 1996

8:30 - 10:30 am	EPANET: case studies, floating reservoirs (computer lab)
10:30 - 10:45	Break
10:45 - 12:30	EPANET: case studies (computer lab)
12:30 - 1:30	Lunch
1:30 - 2:30	Pipe materials
2:30 - 3:30	Cost analysis
3:30 - 3:45	Break
3:45 - 4:15	GIS demonstration
4:15 - 4:30	Miscellaneous and closeout

LIST OF PARTICIPANTS

MAZEN NURI	PECDAR
NABIL BARHAM	Qalqilia Municipality
NADAL KAHLIL	Jerusalem Water Undertaking
MUSA KHATIB	UNDP
NADEL AL KHATEEB	Palestinian Water Authority
YOUSIF HAMMAD	Palestinian Water Authority
JOHNY THEODORY	UNDP
MOHAMMAD JA'AS	West Bank Water Department
ALI ODEH	West Bank Water Department
TAHER NASSEREDDIN	West Bank Water Department
IBRAHIM AYESH	West Bank Water Department
YUSIF HAMMAD	West Bank Water Department
IMAD AL-ZEC	Hebron Municipality
WADDAH LABADI	Jenin Municipality
WASFI IZZAT KABAHA	Jenin Municipality
ABDUL MANEM SALEM	UNDP
TOM STAAL	USAID
JOHN STARNES	USAID
CARL MAXWELL	USAID

SCOPE OF WORK
WATER SYSTEM DESIGN SEMINAR

Background

USAID is presently financing the construction of water networks for a number of villages and for one municipality in the West Bank. However, USAID/West Bank and Gaza is concerned that existing design practices in the West Bank result in the construction of water networks that are generally not cost-effective. Among deficiencies observed in recent water network designs are:

- The use of costly pipe materials has contributed to a practice of undersizing water mains.
- Extensive lengths of undersized pipeline are classified as "service lines" and thus designed as branch lines rather than as essential elements of a "looped" network grid.
- Concern about intermittent supplies has contributed to a practice of abandoning the use of reservoirs that "float" on the system in favor of costly "direct feedlines" to reservoirs.
- Inappropriate pipe materials, particularly for smaller diameter lines, contribute to hugh losses in pipe networks.
- As a result of hilly terrain in many areas of the West Bank, system operating pressures often are excessive and contribute to the huge losses in pipe networks.
- Design drawings lack minimal basic data with which to evaluate the adequacy of design --
    - Design parameters such as per capita flows, assumed pipe friction coefficients, and peak factors are omitted.
    - Information regarding pressure ranges at connections to existing transmission mains and delivery capacities of existing well supplies are not provided.
    - Horizontal and vertical controls for pipe networks are not routinely provided. Often, neither pipeline profiles are provided nor topographic maps included in the design drawings.

Many of the noted design deficiencies are directly attributable either to: 1) a lack of capacity within water departments to perform detailed hydraulic analyses of relatively complex pipe networks or 2) lack of information on alternative materials of

construction.

Scope of Work

Summary Statement of Work

Two engineers with extensive experience in the design and construction of water systems will develop and conduct a 2-day seminar covering the design of pipeline networks for village and municipal water systems.

Purpose

The primary purpose of the seminar is to develop an understanding among water system designers in the West Bank of the importance of properly sizing and interconnecting system components, including reservoirs, to maximizing flows while minimizing energy and materials costs.

Specific Tasks

Under the joint sponsorship of the United Nations Development Program (UNDP) and USAID, a 2-day seminar developed by the consultants will be held in the West Bank to introduce and demonstrate computer-based tools for analyzing and designed water pipe networks. The target audience of the seminar will be water system designers from the West Bank Water Department and the various municipalities. The seminar will cover the following:

- Basic review of closed conduit hydraulics focusing on the Hardy Cross procedure for analyzing looped pipe networks.
- Presentation of typical basic design criteria for water networks.
- Suggested formats for design drawings for pipelines.
- Overview of both commonly used software for conducting hydraulic simulations of looped water distribution networks and a typical CADD system for designing networks.
- Demonstration of "user friendly" software selected by the consultants for introducing computer-based hydraulic analyses to the West Bank Water Department and selected municipal water departments. One licensed copy each (total of five copies) of the selected software will be provided to the West Bank Water Department, the UNDP, and three municipalities.

- Demonstration of CADD software recommended by the consultants for designing water distribution systems. If approved by USAID, one licensed copy of the recommended software will be provided to the West Bank Water Department.

- Application of selected software in case studies of West Bank village water networks. Preferably, these case studies will be for systems either recently funded by USAID or proposed for funding by USAID.

- Comparison of floating reservoir and direct feedline reservoir interconnections to pipe networks.

- Use of pressure reducing stations and other alternatives for designing water networks in hilly areas with substantial variation in elevations between neighborhoods.

- Presentation of the advantages and disadvantages of alternative materials for water mains, service connections, and house connections. Particular emphasis shall be given to the use of polyvinyl chloride (PVC) pipe for water mains and high density polyethylene (HDPE) pipe for service and house connections. Local availability and costs of alternative pipe materials and accessories will be included in the presentation.

- Suggested options for providing service connections in conjunction with mainline construction.

- Construction costs for various alternative network layouts and pipe material options as well as lifecycle costing will be addressed with emphasis on their impact on user fees. Additionally, the critical impact of water losses on the cost of water delivered shall be reviewed.

Technical Direction

The consultants will report directly to the Chief Engineer of the USAID/West Bank and Gaza Mission and will coordinate all activities with the Programme Management Officer of the UNDP/Jerusalem.

Scheduling of Work

In order to develop and present the proposed 2-day seminar, it is envisaged that the services of a Team Leader and a Water Expert will be required per the following schedule:

Activity	Team Leader	Water Expert
Preparation of Course Materials and Procurement of Computer Software in U.S.	5 person-days	2 person-days
Travel to Tel Aviv	1 person-day	1 person-day
Briefing of USAID in Tel Aviv	1 person-day	1 person-day
Set-Up for Seminar in West Bank	1 person-day	1 person-day
Presentation of 2-Day Seminar in West Bank	2 person-days	2 person-days
Travel to U.S.	1 person-day	1 person-day

Note: This schedule is based on the assumption that the UNDP will arrange for the seminar facilities.

Special Requirements

The consultants attention is directed to the following special requirements:

- The consultants will be required to procure not less than five (5) licensed copies of software for hydraulic analyses of closed conduit networks for distribution to the UNDP and others identified by USAID.
- The consultants will be required to procure, if approved by USAID, one (1) licensed copy of CADD software for the West Bank Water Department.
- It shall be the consultants' responsibility to provide not less than two computer systems to demonstrate the selected software.
- Course materials in the form of handouts shall be provided for not less than 25 participants (5 from UNDP, 5 from the West Bank Water Department, 10 from the municipalities, 3 from USAID, and 2 others).

Note: It is assumed that UNDP will arrange for meals and refreshments to be provided as part of the seminar.

Reports

There are two reports required for this assignment:

- Prior to purchasing any software, the consultant will contact USAID to report the specifics, including price, of the selected software.

- The consultants shall provide both USAID and UNDP an end of assignment report (in WordPerfect Version 5.2 on 3½-inch disks) describing the contents of the seminar and gauging, based upon student feedback, the success of the seminar in fulfilling its purpose.

WATER SYSTEM DESIGN SEMINAR

FIRST DAY

8:30 am **REGISTRATION - COFFEE**

9:00 am **WELCOME REMARKS**

USAID

UNDP

Instructor (program review)

9:30 am **PROBLEM AND REVIEW**

Review of hydraulics, network design, piping systems and reservoir systems.

Include standard formulas including Hardy Cross, friction loss, reservoir types and purposes.

Present typical basic design criteria.

Introduce various suggested formats for design drawings.

Present overview of CADD systems and other software for hydraulic analysis and design.

10:30 am **BREAK**

10:45 am **DEMONSTRATION SOFTWARE**

Review and explanation of selected demonstration software package.

12:30 pm **LUNCH**

1:30 pm **CASE STUDIES**

Demonstration of software using case studies of local examples of hydraulic analysis of a water network.

Participants to be divided into subgroups.

3:00 pm **BREAK**

3:15 pm **CASE STUDIES**

4:00 pm **CASE STUDY REPORTS**

4:30 pm **CLOSE**

WATER SYSTEM DESIGN SEMINAR

SECOND DAY

9:00 am **PIPE MATERIALS**

Review of pipe materials available for water distribution networks.

Review of construction requirements for each material type, availability, service life and cost factors.

Review of standard specifications for various pipe materials and accessories.

10:00 am **SERVICE CONNECTIONS**

Review of various arrangements for construction of metered service connections.

Include materials and construction staging alternatives.

10:30 am **BREAK**

10:45 am **RESERVOIR SYSTEMS**

The relationship between the sizing of networks and reservoirs.

Floating reservoirs versus direct systems.

Demonstration of the computer model in the deign of properly sized network grids with various reservoir alternatives (i.e., floating vs. direct).

12:00 am **HILLY AREA GRIDS**

Alternative approaches for designing grids in hilly areas.

Use of pressure relief valves.

12:30 am **LUNCH**

1:30 pm **COST CONSIDERATIONS**

Cost analyses approaches.

Lifecycle costing.

Basis for establishment of user fees.

Impact of various materials on costs/user fees.

Impact of network design on costs/user fees.

Impact of water loss on user fees.

2:30 pm **DEMONSTRATION SOFTWARE CASE STUDY**

Emphasize reservoir design alternatives.

3:15 pm **BREAK**

3:30 pm **CASE STUDY** (continuation)

4:15 pm **SUMMARY**

4:30 pm **CLOSE**

WATER SYSTEM DESIGN SEMINAR

EXAMPLE MODULE

Second Day -- 9:00-10:00 am

Objectives:

1. Understand the various types of pipe available for water networks and service connections.
2. Understand the impacts of using various types of pipe on costs, construction and life of system.
3. Understand the advantages and disadvantages of each type of pipe.

Topics:

1. Definition of Pipelines
   a. Trunk Mains
   b. Distribution Mains
   c. Service Lines
   d. House Connections
2. Discussion of Pipe Materials
   a. Asbestos Cement
   b. Ductile Iron
   c. Glassfibre Reinforced Plastic (GRP)
   d. High Density Polyethylene (HDPE)
   e. Polyvinyl Chloride (PVC)
   f. Coated Steel
   g. Galvanized
   h. Other
3. Advantages and Disadvantages of Each

4. Installation Criteria for Each
    a. Excavation, Laying, and Backfilling Procedures
    b. Joints and Fittings
    c. Corrosion Protection
    d. Testing
    e. Repair and Hookup
5. Maintenance
6. Availability
    a. Local Production
    b. Local Suppliers/Importers
7. Costs
8. Standards and Specifications
    a. International Standards
    b. Local Standards
    c. Procurement Testing and Inspection
9. Mixing Pipe Materials
10. Summary and Suggestions for the Region
11. Questions and Comments

WATER SYSTEM DESIGN SEMINAR

PART II

HANDOUT MATERIALS AT SEMINAR HELD ON

MAY 14 AND MAY 15

1996

AT

BEIR ZEIT UNIVERSITY

SPONSORED BY

USAID/ WEST BANK AND GAZA

AND

UNDP JERUSALEM OFFICE

CONTENTS

PART 11 - HAND OUT MATERIALS

January 1994
(Version 1.1)

EPANET USERS MANUAL

by

Lewis A. Rossman
Drinking Water Research Division
Risk Reduction Engineering Laboratory
Cincinnati, Ohio 45268

RISK REDUCTION ENGINEERING LABORATORY
OFFICE OF RESEARCH AND DEVELOPMENT
U.S. ENVIRONMENTAL PROTECTION AGENCY
CINCINNATI, OH 45268

DISCLAIMER

FOREWORD

Today's rapidly developing and changing technologies and industrial products and practices frequently carry with them the increased generation of materials that, if improperly dealt with, can threaten both public health and the environment. The U.S. Environmental Protection Agency (EPA) is charged by Congress with protecting the Nation's land, air, and water resources. Under a mandate of national environmental laws, the Agency strives to formulate and implement actions leading to a compatible balance between human activities and the ability of natural systems to support and nurture life. These laws direct the EPA to perform research to define our environmental problems, measure the impacts, and search for solutions.

The Risk Reduction Engineering Laboratory is responsible for planning, implementing, and managing research, development, and demonstration programs to provide an authoritative, defensible engineering basis in support of the policies, programs, and regulations of the EPA with respect to drinking water, wastewater, pesticides, toxic substances, solid and hazardous wastes, and Superfund-related activities. This publication is one of the products of that research and provides a vital communication link between the researcher and the user community.

In order to meet regulatory requirements and customer expectations, water utilities are feeling a growing need to understand better the movement and transformation undergone by treated water introduced into their distribution systems. EPANET is a computerized simulation model that helps meet this goal. It predicts the dynamic hydraulic and water quality behavior within a drinking water distribution system operating over an extended time period. This manual describes the operation of the program and shows how it can be used to analyze a variety of water quality related issues in distribution systems.

E. Timothy Oppelt, Director
Risk Reduction Engineering Laboratory

ABSTRACT

EPANET is a computer program that performs extended period simulation of hydraulic and water quality behavior within drinking water distribution systems. It tracks the flow of water in each pipe, the pressure at each pipe junction, the height of water in each storage tank, and the concentration of a substance throughout a distribution system during a multi-time period simulation. In addition to substance concentrations, water age and source tracing can also be performed. The water quality module of EPANET is equipped to model such phenomena as reactions within the bulk flow, reactions at the pipe wall, and mass transport between the bulk flow and pipe wall. This manual describes how to use the EPANET program on a personal computer under both DOS and Microsoft® Windows™. Under Windows the user is able to edit EPANET input files, run a simulation, display the results on a color coded map of the distribution system and generate additional tabular and graphical views of these results.

FIGURES

TABLES

TABLE OF CONTENTS

ACKNOWLEDGEMENTS

Special thanks are owed to Dr. Walter M. Grayman, Consulting Engineer, and to Dr. Paul F. Boulos of Montgomery Watson for the many suggestions and hours of testing they provided during the development of the EPANET program. Without their assistance, the quality of this product would be substantially less.

The efforts of Dr. Rolf Deininger and Kuo-Liang Lai of the University of Michigan, Dr. Charles N. Haas of Drexel University, Eugene Mantchev of the Seattle Water Department, and Drs. Lindell Ormsbee and Srinivas Reddy of the University of Kentucky in beta-testing the EPANET program are also greatly appreciated. Gayle Smalley of the North Marin Water District and Rob Tull of Montgomery Watson supplied data for one of the example networks in Chapter 7. Dr. James Uber of the University of Cincinnati along with his students Cheryl Bush, Mao Fang, and Ken Hickey, provided thoughtful discussion on many key issues. The public domain text editor TE 2.61 used by EPANET was developed by John D. Haluska.

A final note of acknowledgement goes to Dr. Robert M. Clark, Director of RREL's Drinking Water Research Division, whose pioneering work in modeling water quality in distribution systems and personal encouragement inspired the development of EPANET.

CHAPTER 1

INTRODUCTION

EPANET is a computer program that performs extended period simulation of hydraulic and water quality behavior within pressurized pipe networks. A network can consist of pipes, nodes (pipe junctions), pumps, valves and storage tanks or reservoirs. EPANET tracks the flow of water in each pipe, the pressure at each node, the height of water in each tank, and the concentration of a substance throughout the network during a multi-time period simulation. In addition to substance concentrations, water age and source tracing can also be simulated.

EPANET is designed to be a research tool for improving our understanding of the movement and fate of drinking water constituents within distribution systems. The water quality module of EPANET is equipped to model such phenomena as reactions within the bulk flow, reactions at the pipe wall, and mass transport between the bulk flow and pipe wall. As we gain more experience and knowledge of water quality behavior within distribution systems we intend to update and refine EPANET to reflect this progress.

Another distinguishing feature of EPANET is its coordinated approach to modeling network hydraulics and water quality. The program can compute a simultaneous solution for both conditions together. Alternatively it can compute only network hydraulics and save these results to a file, or use a previously saved hydraulics file to drive a water quality simulation.

EPANET can be used for many different kinds of applications in distribution system analysis. Sampling program design, hydraulic model calibration, chlorine residual analysis, and consumer exposure assessment are some examples. EPANET can help assess alternative management strategies for improving water quality throughout a system. These would include:

- altering source utilization within multiple source systems,
- altering pumping and tank filling/emptying schedules ,
- use of satellite treatment, such as re-chlorination at storage tanks,

- targeted pipe cleaning and replacement.

EPANET was coded in the C language and makes use of dynamically allocated memory. Thus the only limits on network size are available memory. The version of EPANET contained on the distribution disk is intended for use on IBM-compatible personal computers running under DOS. However it is a relatively simple task to re-compile the source code to run on other machines, such as UNIX workstations.

The EPANET package contains two program modules. One is a network simulator that runs under DOS, receiving its input from a file and writing its output to another file. The user must use external programs to edit the input file and view or print the output file. (An optional DOS shell program is provided that interactively edits EPANET input, runs the simulator, and views or prints its output according to selections made from a menu). The second module is a Microsoft® Windows™ 3.x program that allows one to edit EPANET input data, run the simulator, and graphically display its results in a variety of ways on a map of the network. Thus there are two different ways to run EPANET -- under DOS or under Windows. We believe that for most situations the visualization power of the Windows version is an essential aid in trying to comprehend the results of running EPANET and recommend that this mode be used if your computer hardware and software can support it.

Chapter 2 of this manual describes how EPANET models water distribution systems. Chapter 3 tells you how to install the EPANET system on your personal computer. A detailed description of the program's input data format is provided in Chapter 4, while Chapters 5 and 6 give instructions for running EPANET under DOS and Windows, respectively. Finally, Chapter 7 illustrates different features of the program by running several example applications.

CHAPTER 2

THE NETWORK MODEL

2.1 Network Components

EPANET views a water distribution network as a collection of links connected together at their endpoints called nodes. Figure 2.1 illustrates a node-link representation of a simple water network.

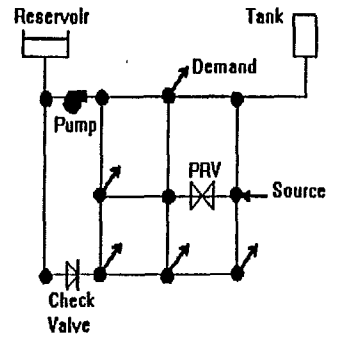

Figure 2.1 Node-Link Representation of a Network

As shown in the figure, links come in several varieties:

1. pipes
2. pumps
3. valves.

Besides being the junction point between connecting pipes, nodes can serve as:

1. points of water consumption (demand nodes)

2. points of water input (source nodes)

3. locations of tanks or reservoirs (storage nodes).

How EPANET models the hydraulic behavior of each of these components will be reviewed next. For the sake of discussion we will express all flow rates in cubic feet per second (cfs), although the program can also accept flow units in gallons per minute (gpm), million gallons per day (mgd), or liters per second (L/s).

Pipes

Pipes convey water from one point to another. Flow direction is from the end at higher head (potential energy per pound of water) to that at lower head. The head lost to friction associated with flow through a pipe can be expressed in a general fashion as:

$$h_L = a\,q^b \qquad (1)$$

where h_L is the head loss in feet, q is the flow in cfs, a is a resistance coefficient, and b is a flow exponent.

EPANET can use one of three popular forms of Equation 1: the Hazen-Williams formula, the Darcy-Weisbach formula, or the Chezy-Manning formula. The Hazen-Williams formula is probably the most popular head loss equation for distribution systems, the Darcy-Weisbach formula is more applicable to laminar flow and to fluids other than water, while the Chezy-Manning formula is more commonly used for open channel flow. Table 2.1 lists values of the resistance coefficients and flow exponents for each formula. Note that each formula uses a different pipe roughness coefficient that must be determined empirically. Table 2.2 lists general ranges of these coefficients for different types of new pipe materials. Be aware that a pipe's roughness coefficient can change considerably with age.

Pipes can contain check valves in them that restrict flow to a specific direction. They can also be made to open or close at pre-set times, when tank levels fall below or above certain set-points, or when nodal pressures fall below or above certain set-points.

Table 2.1 Pipe Head Loss Formulas

Formula	Resistance Coefficient (a)	Flow Exponent (b)
Hazen-Williams	$4.72\,C^{-1.85}\,d^{-4.87}\,L$	1.85
Darcy-Weisbach	$0.0252\,f(\varepsilon,d,q)\,d^{-5}\,L$	2
Chezy-Manning (full pipe flow)	$4.66\,n^2\,d^{-5.33}\,L$	2

Notes: C = Hazen-Williams roughness coefficient
ε = Darcy-Weisbach roughness coefficient (ft)
f = friction factor (dependent on ε, d, and q)
d = pipe diameter (ft)
L = pipe length (ft)

Table 2.2 Roughness Coefficients for New Pipe

Material	Hazen-Williams C	Darcy-Weisbach ε, millifeet	Manning's n
Cast Iron	130 - 140	0.85	0.012 - 0.015
Concrete or Concrete Lined	120 - 140	1.0 - 10	0.012 - 0.017
Galvanized Iron	120	0.5	0.015 - 0.017
Plastic	140 - 150	0.005	0.011 - 0.015
Steel	140 - 150	0.15	0.015 - 0.017
Vitrified Clay	110		0.013 - 0.015

Pumps

A pump is a device that raises the hydraulic head of water. The relationship describing the head imparted to a fluid as a function of its flow rate through the pump is termed the pump characteristic curve. Figure 2.2 gives an example. EPANET represents pump curves with a function of the form:

$$h_G = h_o - a\,q^b \qquad (2)$$

where h_G is the head gain imparted by the pump in ft, q is the flow through the pump in cfs, h_o is the shutoff head, a is a resistance coefficient, and b is a flow exponent. By supplying EPANET with the shutoff head ho and two other points on the pump curve, the program is able to estimate values for a and b.

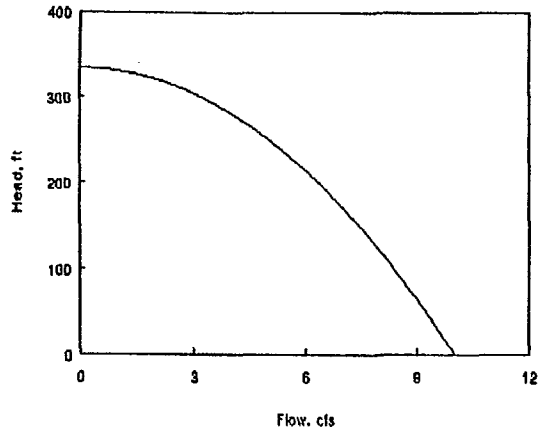

Figure 2.2 Example of a Pump Characteristic Curve

Some pumps exhibit a different type of characteristic curve beyond their normal flow range. Figure 2.3 shows a pump with a linear head-flow relation in its extended flow range. In this case EPANET can describe the pump's behavior with two equations, one for the normal flow range and another for its extended flow range.

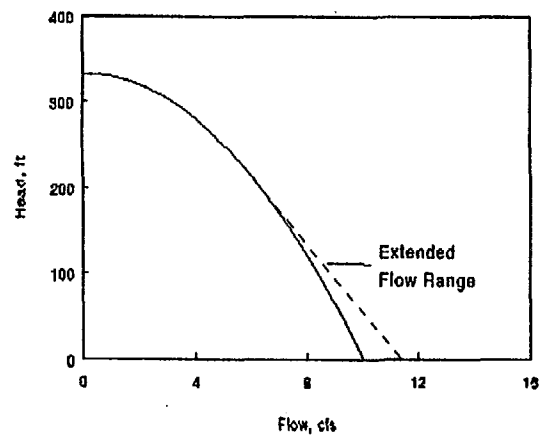

Figure 2.3 Pump Curve with Extended Flow Range

Another way to represent a pump when its charateristic curve is unknown is to assume that it adds energy to the water at a constant rate. In this case the equation of the pump curve would be

$$h_G = 8.81\, Hp / q \qquad (3)$$

where Hp is the pump horsepower. The latter quantity can be computed based on an initial estimate of the flow and head at which the pump will operate. This type of pump curve should only be used for steady-state, preliminary design studies.

Flow through a pump is unidirectional and pumps must operate within the head and flow limits imposed by their characteristic curves. If the system conditions require that the pump produce more than its shutoff head, EPANET will attempt to close the pump off and will issue a warning message. EPANET allows you to turn pumps on or off at pre-set times, when tank levels fall below or above certain set-points, or when nodal pressures fall below or above certain set-points. Variable speed pumps can also be considered by specifying that their speed setting be changed under these same types of conditions. By definition, the original pump curve supplied to the program has a relative speed setting of 1. If the pump speed doubles, then the relative setting would be 2; if run at half speed, the relative setting is 0.5 and so on. Figure 2.4 illustrates how changing a pump's speed setting affects its characteristic curve.

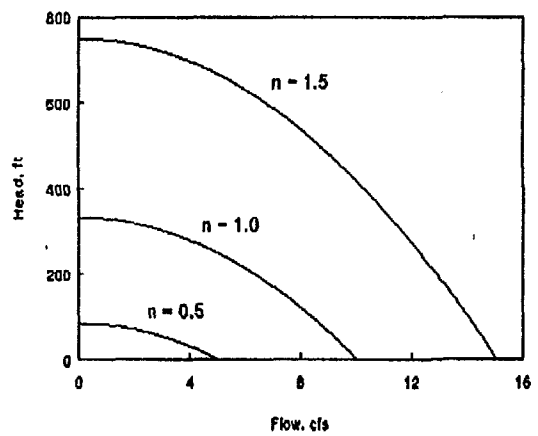

Figure 2.4 Effect of Relative Speed (n) on Pump Curve

Valves

Aside from the valves in pipes that are either fully opened or closed (such as check valves), EPANET can also represent valves that control either the pressure or flow at specific points in a network. Such valves are considered as links of negligible length with specified upstream and downstream junction nodes. The types of valves that can be modelled are:

1. Pressure Reducing Valves (PRVs)
2. Pressure Sustaining Valves (PSVs)
3. Pressure Breaker Valves (PBVs)
4. Flow Control Valves (FCVs)
5. Throttle Control Valves (TCVs)

PRVs limit the pressure on their downstream end to not exceed a pre-set value when the upstream pressure is above the setting. If the upstream pressure is below the setting, then flow through the valve is unrestricted. Should the pressure on the downstream end exceed that on the upstream end, the valve closes to prevent reverse flow.

PSVs try to maintain a minimum pressure on their upstream end when the downstream pressure is below that value. If the downstream pressure is above the setting, then flow through the valve is unrestricted. Should the downstream pressure exceed the upstream pressure then the valve closes to prevent reverse flow.

PBVs force a specified pressure loss to occur across the valve. Flow can be in either direction through the valve.

FCVs limit the flow through a valve to a specified amount. The program produces a warning message if this flow cannot be maintained without having to add additional head at the valve.

TCVs simulate a partially closed valve by adjusting the minor head loss coefficient of the valve. A relationship between the degree to which the valve is closed and the resulting head loss coefficient is usually available from the valve manufacturer.

Minor Losses

Minor head losses (also called local losses) can be associated with the added turbulence that occurs at bends, junctions, meters, and valves. The importance of such losses will depend on the layout of the pipe network and the degree of accuracy required. EPANET allows each pipe and valve to have a minor loss coefficient associated with it. It computes the resulting head loss from the following formula:

$$h_L = 0.0252\, K\, q^2\, d^{-4} \qquad (4)$$

where K is a minor loss coefficient, q is flow rate in cfs, and d is diameter in ft. Table 2.3 gives values of K for several different kinds of components.

Table 2.3 Loss Coefficients for Common Components

Component	Loss Coefficient
Globe valve, fully open	10.0
Angle valve, fully open	5.0
Swing check valve, fully open	2.5
Gate valve, fully open	0.2
Short-radius elbow	0.9
Medium-radius elbow	0.8
Long-radius elbow	0.6
45° elbow	0.4
Closed return bend	2.2
Standard tee - flow through run	0.6
Standard tee - flow through branch	1.8
Square entrance	0.5
Exit	1.0

Nodes

All nodes should have their elevation above sea level specified so that the contribution to hydraulic head due to elevation can be computed. Any water consumption or supply rates at nodes that are not storage nodes must be known over the duration of time the network is being analyzed. Storage nodes (i.e., tanks and reservoirs) are special types of nodes where a free water surface exists and the hydraulic head is simply the elevation of water above sea level. Tanks are distinguished from reservoirs by having their water surface level change as water flows into or out of them -- reservoirs remain at a constant water level no matter

what the flow is. EPANET models the change in water level of a storage tank with the following equation:

$$\Delta y = (q/A)\,\Delta t \qquad (5)$$

where Δy = change in water level, ft
q = flow rate into (+) or out of (-) tank, cfs
A = cross-sectional area of the tank, ft2
Δt = time interval, sec

Thus EPANET needs to know the cross-sectional area as well as the minimum and maximum permissible water levels for storage tanks. Reservoir-type storage nodes are usually used to represent external water sources, such as lakes, rivers, or well fields. Storage nodes should not have an external water consumption or supply rate associated with them.

2.2 Time Patterns

EPANET assumes that water usage rates, external water supply rates, and constituent source concentrations at nodes remain constant over a fixed period of time, but these quantities can change from one time period to another. The default time period interval is 1 hour, but this can be set at any desired value. The value of any of these quantities in a time period equals a baseline value multiplied by a time pattern factor for that period. Figure 2.5 illustrates a pattern of factors that might apply to daily water demands, where each period is of 2 hours duration. Different patterns can be assigned to individual nodes or groups of nodes.

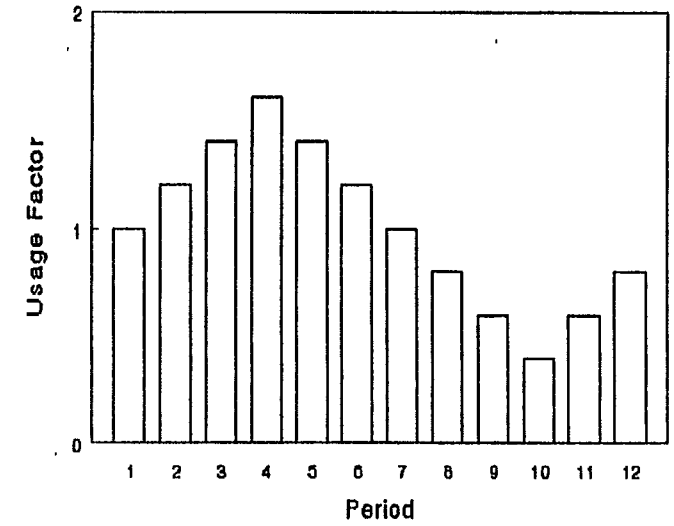

Figure 2.5 Time Pattern for Water Usage

2.3 Hydraulic Simulation Model

The hydraulic model used by EPANET is an extended period hydraulic simulator that solves the following set of equations for each storage node s (tank or reservoir) in the system:

$$\partial y_s / \partial t = q_s / A_s \qquad (6)$$

$$q_s = \Sigma_i\, q_{is} - \Sigma_j\, q_{sj} \qquad (7)$$

$$h_s = E_s + y_s \qquad (8)$$

along with the following equations for each link (between nodes i and j) and each node k:

$$h_i - h_j = f(q_{ij}) \qquad (9)$$

$$\Sigma_i\, q_{ik} - \Sigma_j\, q_{kj} - Q_k = 0 \qquad (10)$$

where the unknown quantities are:
y_s = height of water stored at node s, ft

q_s = flow into storage node s, cfs
q_{ij} = flow in link connecting nodes i and j, cfs
h_i = hydraulic grade line elevation at node i (equal to elevation head plus pressure head), ft

and the known constants are:

A_s = cross-sectional area of storage node s (taken as infinite for reservoirs), ft^2
E_s = elevation of node s, ft
Q_k = flow consumed (+) or supplied (-) at node k, cfs
$f(\cdot)$ = functional relation between head loss and flow in a link

Equation (6) expresses conservation of water volume at a storage node while Equations (7) and (10) do the same for pipe junctions. Equation (9) represents the energy loss or gain due to flow within a link. For known initial storage node levels ys at time zero, Equations (9) and (10) are solved for all flows q_{ij} and heads h_i using Equation (8) as a boundary condition. This step is called "hydraulically balancing" the network, and is accomplished by using an iterative technique to solve the nonlinear equations involved.

The method used by EPANET to solve this system of equations is known as the "gradient algorithm" (Todini, E. and Pilati, S., "A gradient method for the analysis of pipe networks", International Conference on Computer Applications for Water Supply and Distribution , Leicester Polytechnic, UK, September 8-10, 1987.) and has several attractive features. First, the system of linear equations to be solved at each iteration of the algorithm is sparse, symmetric, and positive-definite. This allows highly efficient sparse matrix techniques to be used for their solution. (George, A. and Liu, J. W-H., *Computer Solution of Large Sparse Positive Definite Systems*, Prentice-Hall, Inc., Englewood Cliffs, NJ, 1981.) Second, the method maintains flow continuity at all nodes after its first iteration. And third, it can readily handle pumps and valves without having to change the structure of the equation matrix when the status of these components changes.

After a network hydraulic solution is obtained, flow into (or out of) each storage node, qs is found from Equation (7) and used in Equation (6) to find new storage node elevations after a time step dt. This process is then repeated for all subsequent time steps for the remainder of the simulation period.

The normal hydraulic time step used in EPANET is 1 hour, but can be made shorter if more accuracy is needed. Shorter time steps than normal can occur automatically whenever pipe or pump controls are activated (e.g., a tank fills to the level that causes a pump to shut off), or when a tank becomes either empty or full (causing the tank outlet/inlet line to be closed).

2.4 Water Quality Simulation Model

EPANET's dynamic water quality simulator tracks the fate of a dissolved substance flowing through the network over time. It uses the flows from the hydraulic simulation to solve a conservation of mass equation for the substance within each link connecting nodes i and j:

$$\partial c_{ij}/\partial t = -(q_{ij}/A_{ij})(\partial c_{ij}/\partial x_{ij}) + \theta(c_{ij}) \qquad (11)$$

where c_{ij} = concentration of substance in link i,j as a function of distance and time (i.e., $c_{ij} = c_{ij}(x_{ij},t)$), mass/$ft^3$
x_{ij} = distance along link i,j, ft
q_{ij} = flow rate in link i,j at time t, cfs
A_{ij} = cross-sectional area of link i,j, ft^2
$\theta(c_{ij})$ = rate of reaction of constituent within link i,j, mass/ft^3/day

Equation (11) must be solved with a known initial condition at time zero and the following boundary condition at the beginning of the link, i.e., at node i where x_{ij} = 0:

$$c_{ij}(0,t) = \frac{\Sigma_k q_{ki}\, c_{ki}(L_{ki},t) + M_i}{\Sigma_k q_{ki} + Q_{si}} \qquad (12)$$

The summations are made over all links k,i that have flow into the head node (i) of link i,j, while L_{ki} is the length of link k,i, M_i is the substance mass introduced by any external source at node i, and Q_{si} is the source's flow rate. Observe that the boundary condition for link i,j depends on the end node concentrations of all links k,i that deliver flow to link i,j. Thus Equations (11) and (12) form a coupled set of differential/algebraic equations over all links in the network.

EPANET solves these equations by a numerical scheme called the Discrete Volume Element Method (DVEM) (Rossman, L.A., Boulos, P.F., and Altman, T., "The Discrete Volume Element Method for Modeling Water Quality in Pipe Networks", *Jour. Water Resources Planning and Management*, Vol. 119, No. 5, September/October 1993.). Within each hydraulic time period when flows are constant, DVEM computes a shorter water quality time step and divides each pipe into a number of completely mixed volume segments. Within each water quality time step, the material contained in each pipe segment is first transferred to its adjacent downstream segment. When the adjacent segment is a junction node, the mass and flow entering the node is added to any mass and flow already received from other pipes. After this transport step is completed for all pipes, the resulting mixture concentration at each junction node is computed and released into the head end segments of pipes with flow leaving the node. Then the mass within each pipe segment is reacted. This sequence of steps is repeated until the time when a

new hydraulic condition occurs. The network is then re-segmented and the computations are continued.

The water quality time steps used in the method are chosen to be as large as possible without causing any pipe's flow volume to exceed its physical volume (i.e., have mass transported beyond the end of the pipe). Thus the water quality time step dtwq cannot be larger than the shortest time of travel through any pipe in the network, i.e.:

$$dt_{wq} = \text{Min}\,(V_{ij} / q_{ij}) \text{ for all pipes } i,j \qquad (13)$$

where V_{ij} is the volume of pipe i,j and qij is its flow rate. Pumps and valves are not included in this determination since transport through them is assumed to occur instantaneously. Under this water quality time step, the number of volume segments in each pipe (n_{ij}) is:

$$n_{ij} = \text{INT}\,[V_{ij} / (q_{ij}\, dt_{wq})] \qquad (14)$$

where INT[x] is the largest integer less than or equal to x. EPANET limits dt_{wq} to be no smaller than a user-adjustable time tolerance, so that solution times and the number of segment volumes do not become excessive. The default value of this tolerance is 1/10 the length of the hydraulic time step. In addition, the user can specify a maximum number of volume segments that any single pipe can be divided into. The default value for this parameter is 100.

2.5 Reaction Rate Model

Equation (11) of EPANET's water quality model provides a mechanism for considering the loss (or growth) of a substance by reaction as it travels through the distribution system. Reaction can occur both within the bulk flow and with material along the pipe wall. EPANET models both types of reactions using first order kinetics. In general, within any given pipe, material in the bulk flow will decrease at a rate equal to:

$$\theta(c) = -k_b c - (k_f / R_H)(c - c_w) \qquad (15)$$

where k_b = first-order bulk reaction rate constant, 1/sec
c = substance concentration in bulk flow, mass/ft^3
k_f = mass transfer coefficient between bulk flow and pipe wall, ft/sec
R_H = hydraulic radius of pipe (pipe radius/2), ft
c_w = substance concentration at the wall, mass/ft^3

The first term in this equation models bulk flow reaction, while the second term, which includes a new unknown c_w, represents the rate at which material is transported between the bulk flow and reaction sites on the pipe wall. Assuming that the rate of reaction at the wall is first order with respect to c_w and that it proceeds at the same rate as material is transported to the wall (so that no accumulation occurs), we can write the following mass balance for the wall reaction:

$$k_f(c - c_w) = k_w c_w \qquad (16)$$

where k_w is a wall reaction rate constant with units of ft/sec. Solving for c_w and substituting into Equation (15) results in the following reaction rate expression:

$$\theta(c) = -Kc \qquad (17)$$

where K is an overall first order rate constant equal to:

$$K = k_b + \frac{k_w k_f}{R_H(k_w + k_f)} \qquad (18)$$

The above discussion pertains to substance decay, with mass transfer from the bulk flow to the pipe wall. Dropping the negative sign in front of K in Equation (17) would model the growth of a substance, with mass transfer from the pipe wall to the bulk flow.

To summarize, there are three coefficients used by EPANET to describe reactions within a pipe. The pipe's bulk rate constant k_b and its wall rate constant k_w must be determined empirically and supplied as input to the model. The mass transfer coefficient k_f is calculated internally by EPANET using the dimensionless Sherwood Number as follows (Edwards, D.K., Denny, V.E., and Mills, A.F., *Transfer Processes*, McGraw-Hill, New York, NY, 1976.):

$$k_f = Sh\, D / d \qquad (19)$$

$$Sh = 0.023\, Re^{0.83}\, Sc^{0.333} \qquad \text{for } Re \geq 2300 \qquad (20)$$

$$Sh = 3.65 + \frac{0.668(d/L)Re\, Sc}{1 + .04[(d/L)Re\, Sc]^{.67}} \qquad \text{for } Re < 2300 \qquad (21)$$

where k_f = mass transfer coefficient, ft/sec
Sh = Sherwood Number
Re = Reynolds Number (q d / A / v)

Sc	=	Schmidt Number (v / D)
d	=	pipe diameter, ft
L	=	pipe length, ft
q	=	flow rate, cfs
A	=	cross-sectional flow area of pipe, ft^2
D	=	molecular diffusivity of substance in fluid, ft^2/sec
v	=	kinematic viscosity of fluid, ft^2/sec

Equation (20) applies to turbulent flow where the mass transfer coefficient is independent of the position along the pipe. For laminar flow, Equation (21) supplies an average value of the mass transfer coefficient along the length of the pipe.

2.6 Water Age and Source Tracing

In addition to chemical transport, EPANET can also model the changes in age of water over time throughout a network. To accomplish this, the program interprets the variable c in Equation (11) as the age of water and sets the reaction term $\theta(c)$ in the equation to a constant value of 1.0. During the simulation, any new water entering the network from reservoirs or source nodes enters with age of zero. Water age provides a simple, non-specific measure of the overall quality of delivered drinking water. When the model is run under constant hydraulic conditions, the age of water at any node in the network can also be interpreted as the time of travel to the node.

EPANET can also track over time what percent of water reaching any node in the network had its origin at a particular node. In this case the variable c in Equation (11) becomes the percentage of flow from the node in question and the reaction term is set to zero. The c-value of the source node is kept at 100 percent throughout the duration of the simulation. The source node can be any node in the network, including storage nodes. Source tracing is a useful tool for analyzing distribution systems drawing water from two or more different raw water supplies. It can show to what degree water from a given source blends with that from other sources, and how the spatial pattern of this blending changes over time.

CHAPTER 3

INSTALLATION

3.1 System Requirements

To install EPANET to run under both Windows and DOS requires the following:

- an IBM-compatible PC equipped with an 80286 or higher CPU
- MS-DOS or PC-DOS version 3.0 or later
- Microsoft Windows version 3.0 or later
- at least 3 megabytes of free disk space

To install EPANET for DOS only requires a PC equipped with an 8088 or higher CPU running MS-DOS or PC-DOS version 3.0 or later. Although not required, a math co-processor is highly recommended.

3.2 Installation For Both Windows and DOS

To install EPANET so that it will run under either Windows or DOS:

1. Place the distribution disk in a floppy disk drive (drive A or B).

2a. If Windows is not running, enter the command

WIN A:SETUP

at the DOS prompt (use *WIN B:SETUP* instead if the distribution disk is in drive B).

2b. If Windows is already running, select **Run** from the **File** menu of the Program Manager, type **A:SETUP** in the Command Line box, and select the **OK** button. (Type **B:SETUP** instead if the distribution disk is in drive B).

3. If you wish to install EPANET in a directory other than C:\EPANET enter the full path name for your directory choice in the dialog box that appears.

4. Select the **Continue** button to resume the installation.

5. When the installation is completed, a README.TXT file will be displayed in the Windows Notepad program informing you of any modifications to the users manual and how to further customize your installation.

After a successful installation, a new Program Group named EPANET will be added to your Program Manager, with an EPANET icon in it.

Note: If EPANET fails to install properly, try the following:

Shut down all other Windows applications that may be running (such as the Clock) and launch the setup program again from Program Manager.

Exit from Windows, change directories to the Windows directory (typically c:\windows), and repeat the installation procedure.

If using Windows for Workgroups, exit from Windows, re-start Windows in Standard mode, and repeat the installation procedure.

Appendix A lists the various files that are installed on your system. If for some reason you need to re-install the entire EPANET system or only a portion of it, repeat the entire installation procedure as described above. Do not try to copy individual files off of the distribution disk since several of these files are in a compressed format.

3.3 Installation For DOS Only

If your system is not equipped with Windows, you can install a version of EPANET that will run only under DOS as follows:

1. Place the distribution disk in a floppy disk drive (either drive A or B).

2. Enter the following command at the DOS prompt:

   A:SETUP4D
   (or *B:SETUP4D* if the disk is in drive B).

3. When prompted, enter the full path name of your choice for an EPANET directory, or simply hit the Enter key to accept C:\EPANET.

4. Verify your choice of an EPANET directory by hitting the 'y' key. Hitting the Escape key will cancel the installation, while any other key will ask you to re-specify an EPANET directory.

5. The relevant files will be copied from the installation disk to your EPANET directory.

Appendix A also lists those files installed for DOS operation only.

3.4 Customizing Your Installation

Running in 32-Bit Mode

EPANET's network simulator comes in both a standard version and 32-bit version. The latter works only on PC's equipped with an 80386 or higher CPU and when run under Windows, in Windows' 386 Enhanced mode. It runs simulations about twice as fast and makes all of the machine's extended memory available to the program. The standard version of the simulator can only use a maximum of 640 kilobytes of conventional memory. Because the program size of the 32-bit version of EPANET is about 260 kilobytes larger than the standard version, we recommend that you use it only if you have at least this amount of extended memory available on your machine.

If you want to run EPANET in 32-bit mode, you must modify the AUTOEXEC.BAT file in your root directory. Using any text editor or word processor that saves its output in ASCII format, add the following line to this file:

SET EPANET=32

(Note there are no spaces on either side of the equal sign.) After re-booting your machine, EPANET will automatically run in 32-bit mode. To return to standard mode, simply remove this line from your AUTOEXEC.BAT file and re-boot your machine.

Using a Different Editor

The Windows version of EPANET comes with a public domain text editor that is used to edit input data files. It is a DOS program named TE.EXE that EPANET runs within a DOS window. If you wish, you can substitute a different editor of your choosing. It can be either a DOS or Windows program that can accept the

name of the file to edit on its command line, and is capable of editing large files. This would eliminate such programs as the Windows Notepad which has a file size limit of only 32 kilobytes.

To replace the editor that ships with EPANET with another DOS editor (such as EDIT.COM that comes with MS-DOS 5.0 and later):

Use the Windows PIF Editor to change the settings in the EDITOR.PIF file in your EPANET directory. For example, to switch to the MS-DOS editor which resides in a directory named C:\DOS, use the following settings:

Program Filename: *C:\DOS\EDIT.COM*
Window Title: *EDITOR*
Startup Directory:

To replace the default editor with a Windows editor:

Use any text editor to add the following section to the file **EPANET.INI** in your Windows directory (if this file doesn't exist then create it):

[EDITOR]
Program=<program name>
Caption=<window title>

where **<program name>** is the full path name of the editor program (e.g., C:\EDITORS\WINEDIT.EXE) and **<window title>** is the portion of the caption that always appears in the editor's main window (e.g., WINEDIT).

CHAPTER 4

INPUT DATA FORMATS

4.1 Data Preparation

Prior to running EPANET, the following initial steps should be taken for the network being studied:

1. Identify all network components and their connections. Network components consist of pipes, pumps, valves, storage tanks and reservoirs. The term "node" denotes a junction where network components connect to one another. Tanks and reservoirs are also considered as nodes. The component (pipe, pump or valve) connecting any two nodes is termed a "link".

2. Assign unique ID numbers to all nodes. ID numbers must be between 1 and 2147483647, but need not be in any specific order nor be consecutive.

3. Assign an ID number to each link (pipe, pump, or valve). It is permissible to use the same ID number for both a node and a link.

4. Collect information on the following system parameters:
   a. diameter, length, roughness and minor loss coefficient for each pipe,
   b. characteristic operating curve for each pump,
   c. diameter, minor loss coefficient and pressure or flow setting for each control valve,
   d. diameter and lower and upper water levels for each tank
   e. control rules that determine how pump, valve and pipe settings change with time, tank water levels, or nodal pressures,
   f. changes in water demands for each node over the time period being simulated
   g. initial water quality at all nodes and changes in water quality over time at source nodes.

With this information in hand, you are now ready to construct an input file to use with EPANET.

4.2 Input File Organization

EPANET receives its input data from a file whose contents are divided into several different sections. Each section begins with a specific keyword in brackets. Figure 4.1 provides an example EPANET input file. (Any text appearing after a semicolon is a comment added to enhance readability.) The keywords and the categories of input data they represent are:

[TITLE]	problem title
[JUNCTIONS]	junction node information
[TANKS]	tank/reservoir information
[PIPES]	pipe information
[PUMPS]	pump information
[VALVES]	valve information
[REPORT]	output report format
[STATUS]	initial status of selected links
[CONTROLS]	link control rules
[PATTERNS]	water demand and source strength time patterns
[TIMES]	simulation time step parameters
[QUALITY]	initial water quality in network
[SOURCES]	baseline contaminant source strength
[REACTIONS]	reaction rate coefficients
[OPTIONS]	miscellaneous analysis options
[DEMANDS]	changes in baseline water demands
[ROUGHNESS]	changes in pipe roughness coefficients
[END]	signals end of input file

The only mandatory sections are [JUNCTIONS], [TANKS], and [PIPES]. The order of sections is not important, except that whenever data in a section references a node, that node must have already been defined in the [JUNCTIONS] or [TANKS] sections. The same holds true for any reference to a link (pipe, pump or valve). To be safe then, you should place the [TITLE], [JUNCTIONS], [TANKS], [PIPES], [PUMPS], and [VALVES] sections first.

Each section can contain one or more lines of data. Blank lines may appear anywhere in the file and the semicolon (;) can be used to indicate that what follows on the line is a comment, not data. Data items can appear in any column of a line, but a line cannot contain more than 80 characters. Observe how in Figure 4.1 these features were used to create a tabular appearance for the data, complete with column headings.


```
==========================================
[TITLE]
 EPANET Example Network 1

[JUNCTIONS]
;-------------------------
;      Elevation   Demand
; ID      ft         gpm
;-------------------------
  10      710          0
  11      710        150
  12      700        150
  13      695        100
  21      700        150
  22      695        200
  23      690        150
  31      700        100
  32      710        100

[TANKS]
;-------------------------------------------
;     Elev.   Init.    Min.    Max.    Diam.
; ID   ft    Level    Level   Level     ft
;-------------------------------------------
   2   850     120      100     150     50.5
   9   800

[PIPES]
;-----------------------------------------------
;      Head     Tail     Length    Diam.   Rough.
;ID    Node     Node       ft       in     Coeff.
;-----------------------------------------------
10       10       11    10530       18      100
11       11       12     5280       14      100
12       12       13     5280       10      100
21       21       22     5280       10      100
22       22       23     5280       12      100
31       31       32     5280        6      100
110       2       12      200       18      100
111      11       21     5280       10      100
112      12       22     5280       12      100
113      13       23     5280        8      100
121      21       31     5280        8      100
122      22       32     5280        6      100

==========================================
```

Figure 4.1 Example EPANET Input Data

```
==============================================
[PUMPS]
;-----------------------------
;    Head   Tail    Design H-Q
;ID  Node   Node    ft     gpm
;-----------------------------
 9     9     10     250   1500

[CONTROLS]
;----------------------------------------
 LINK 9 OPEN IF NODE 2 BELOW 110
 LINK 9 CLOSED IF NODE 2 ABOVE 140

[PATTERNS]
;----------------------------------------
; ID  Multipliers.....
;----------------------------------------
  1   1.0  1.2  1.4  1.6  1.4  1.2
  1   1.0  0.8  0.6  0.4  0.6  0.8

[QUALITY]
;-------------------------
;          Initial
;Nodes     Concen. mg/L
;-------------------------
  2  32      0.5
  9          1.0
  2          1.0

[REACTIONS]
;----------------------------------------
 GLOBAL BULK  -.5          ; Bulk decay coeff.
 GLOBAL WALL  -1           ; Wall decay coeff.

[TIMES]
;----------------------------------------------
 DURATION 24        ; 24 hour simulation period
 PATTERN TIMESTEP 2 ; 2 hour pattern time period

[OPTIONS]
;---------------------------------------------
 QUALITY  Chlorine  ; Chlorine analysis
 MAP      Net1.map  ; Map coordinates file

[END]

==============================================
```

Figure 4.1 Continued

Keywords can appear in mixed lower and upper case. Unless specifically noted, the default units for all data are as follows:

Length	feet
Pressure	pounds per square inch (psi)
Flow	gallons per minute (gpm)
Concentration	milligrams per liter (mg/L)

An option is available in the [OPTIONS] section to change the flow units to either cubic feet per second (cfs), million gallons per day (mgd), or liters per second (L/s). In the latter case, SI (metric) units would apply to all quantities, so lengths and pressures would be expressed in meters (m). Concentration units can also be changed in the [OPTIONS] section to any desired measure.

Steady-State Hydraulics	Extended Period Hydraulics	Extended Period Water Quality
[TITLE]		
[JUNCTIONS]		
[TANKS]		
[PIPES]		
[PUMPS]		
[VALVES]		
[REPORT] ---------->	[STATUS]	
	[CONTROLS]	
	[PATTERNS]	
	[TIMES] ---------->	[QUALITY]
		[SOURCES]
		[REACTIONS]
		[OPTIONS]

4.3 Input File Format

A detailed description of the data in each section of the input file will now be given in alphabetical order. Each section begins on a new page. Mandatory keywords are shown in boldface while optional items appear in parentheses.

Purpose:

Allows pump, valve and pipe settings to change at specific times or when specific pressures or tank water levels are reached in the network.

Formats:

LINK *linkID setting* AT TIME *tvalue (units)*
LINK *linkID setting* IF NODE *nodeID* BELOW *level*
LINK *linkID setting* IF NODE *nodeID* ABOVE *level*

Parameters:

linkID	ID number of a pump, valve or pipe
setting	link setting which can be: - a pump status (either OPEN or CLOSED), - a pump speed (relative to the speed used to define the pump's characteristic curve in the [PUMPS] section), - a valve setting (pressure, flow or loss coefficient) or status (either OPEN or CLOSED) - a pipe status (either OPEN or CLOSED)
tvalue	time at which change in link setting applies
units	optional units on control time which can be: SECONDS (or SEC), MINUTES (or MIN), HOURS(default), DAYS (or DAY)
nodeID	ID of controlling node
level	control action level (either water level above tank bottom if control node is a tank, ft (m), or pressure level if control node is a junction node, psi (m).

Remarks:

Use one line for each control rule. A link can be subject to more than one control rule. Control can be based on time, on water levels in tanks (not elevations), or on pressures at junction nodes.

The first format implements the control at the designated time. Times can be expressed as hours:minutes or as a decimal value. In the latter case, the default units are hours.

The second format implements the control when a specified node drops below its action level while the third format applies the control when the node rises above the action level.

Settings for constant-speed pumps are either OPEN (pump on) or CLOSED (pump off). You can simulate a variable speed pump by specifying a speed factor for its setting. When the factor is 0, the pump is off. When it is 1, the pump operates on its original characteristic curve. Other speed factor values shift the position of the characteristic curve as described in Chapter 2.

Control valve settings can be either numerical values or OPEN/CLOSED.

The only allowable settings for pipes are OPEN or CLOSED. If a pipe is closed, EPANET assumes the existence of a valve somewhere in the line. DO NOT specify a valve in the [VALVES] section to accomplish this purpose.

Examples:

;Open pump 23 when the water level in the tank at node 45 drops
;below 23 ft and close it when the level rises above 36 ft.
LINK 23 OPEN IF NODE 45 BELOW 23
LINK 23 CLOSED IF NODE 45 ABOVE 36

;Close pipe 245 at 3.2 hours into the simulation
LINK 245 CLOSED AT TIME 3.2

;Drop the speed of pump 1 to half its normal level when the pressure at
;node 10 goes above 75 psi
LINK 1 0.5 IF NODE 10 ABOVE 75

Section: [DEMANDS]

Purpose:

Provides an alternative to the [JUNCTIONS] section for entering baseline nodal demand flows.

Format:

MULTIPLY *value*
node demand (pattern)

Parameters:

value	multiplier value
node	node ID
demand	baseline demand flow at the node (negative if there is external flow into the node)
pattern	optional ID of time pattern defined in [PATTERNS] section

Remarks:

The first format multiplies each baseline demand specified previously in the [JUNCTIONS] section by a given amount. The second format is used for individual nodes whose demands are to be specified.

This optional section can be used to specify nodal demands and their time patterns, instead of both elevation and demand as in the [JUNCTIONS] section. Any node referenced in this section must have been previously defined in the [JUNCTIONS] section.

Unless explicitly specified either here or in the [JUNCTIONS] section, a node's demand is zero and it is assigned time pattern 1 by default.

Storage nodes (tanks/reservoirs) should not have demands or external inflows assigned to them.

Example:

```
12 245 3    ;Node 12 has a baseline demand of 245 gpm which varies
            ;over time according to time pattern 3
34 -45      ;Node 34 has an external baseline inflow of 450 gpm
```


Section: [JUNCTIONS]

Purpose:

Identifies elevations and, optionally, baseline demands and demand patterns for all junction nodes in the system.

Formats:

id elev (demand) (pattern)

Parameters:

id	node ID
elev	node elevation, ft (m)
demand	optional baseline demand flow (negative for external source flows into the node)
pattern	optional ID of time pattern defined in [PATTERNS] section

Remarks:

One line should appear for each junction node, excluding tanks and reservoirs.

If you want to specify a time pattern ID for a node you must first specify the baseline demand ahead of it.

If not specified otherwise, a node's demand is zero and it is assigned time pattern 1 by default.

A [JUNCTIONS] section is required.

Examples:

```
101  124          ;Node 101 is at elevation of 124 ft.
123  245  56      ;Node 123 is at elevation of 245 ft. and has a base
                  ;demand of 56 gpm.
34   102  -245  2 ;Node 34 is at elevation of 102 ft. and has a base
                  ;inflow to the system of 245 gpm which changes
                  ;with time according to pattern number 2
```

Section: [OPTIONS]

Purpose:

Provide values for various network properties and simulation options.

Formats:

UNITS	*option*
HEADLOSS	*option*
HYDRAULICS SAVE	*filename*
HYDRAULICS USE	*filename*
VERIFY	*filename*
MAP	*filename*
QUALITY	*option (units)*
SPECIFIC GRAVITY	*value*
VISCOSITY	*value*
DIFFUSIVITY	*value*
TRIALS	*value*
ACCURACY	*value*
SEGMENTS	*value*

Parameters:

option	a choice from a fixed set of options
filename	name of a file
value	numeric value

Remarks:

You need only set option values for items whose default values you wish to change.

UNITS sets the units in which flows are expressed. Choices are:

- GPM (gallons per minute - the default)
- CFS (cubic feet per second)
- MGD (million gallons per day)
- SI (liters per second)

SI units require that metric units (length in meters, pressure in meters, etc.) be used for all other input as well. The other flow units choices maintain use of English units (length in feet, pressure in psi, etc.) throughout.

Section: [OPTIONS] (continued)

HEADLOSS selects the pipe headloss formula used to calculate system hydraulics. The available choices are:

- H-W (Hazen-Williams formula - the default)
- D-W (Darcy-Weisbach formula)
- C-M (Chezy-Manning formula)

Note that each of these formulas employs a different type of roughness coefficient.

HYDRAULICS SAVE is used to identify a file in which the run's hydraulic solution will be saved. This solution can then be used in future runs (using the option defined below) that focus exclusively on water quality, thereby making the calculations go quicker.

HYDRAULICS USE names a file from which a previously saved hydraulics solution will be retrieved, thus avoiding the need to re-compute hydraulics for the current run.

VERIFY identifies the name of a file used to verify that the network connectivity implied by the entries in the [PIPES], [PUMPS], and [VALVES] sections is correct. See Section 4.4 for details on the format of this file.

MAP identifies the name of a file used to store map coordinates and labels that will be displayed when running EPANET for Windows. See Section 4.5 for details on the format of this file.

QUALITY specifies the type of water quality analysis to make. The choices are:

- NONE (no water quality analysis - the default)
- CHEMICAL (compute chemical concentration)
- AGE (compute water age)
- TRACE *nodeID* (compute the fraction of water originating from the specified node)

As an alternative to the keyword CHEMICAL you can use the actual name of the chemical whose concentration will be tracked (such as CHLORINE) so that this name will appear in all output reports. In addition, you can supply the name of the units (e.g., ug/L) in which its concentration will be measured (the default units are mg/L). No water quality analysis will be performed if the simulation duration is 0 hours (i.e., steady state).

SPECIFIC GRAVITY is the weight per unit volume of the fluid being modelled relative to that of water. The default value is 1.0.

VISCOSITY is the kinematic viscosity of the fluid at the temperature condition being simulated. The units of viscosity are ft^2/sec (or m^2/sec for SI units). The default value is 1.1x10-5 ft^2/sec, corresponding to water at 20 degrees C. Viscosity is used only when the Darcy-Weisbach headloss formula is employed or when a pipe wall reaction mechanism is included in the water quality analysis.

DIFFUSIVITY is the molecular diffusivity of the chemical being tracked. It has English units of ft^2/sec and SI units of m^2/sec. The default value is 1.3x10-8 ft^2/sec. This is the diffusivity of chlorine in water at 20 degrees C. Diffusivity is used only when pipe wall reactions are considered in the water quality analysis.

TRIALS is the maximum number of iterations that EPANET should employ when solving the network hydraulic equations at each time step of the simulation. The default value is 40.

ACCURACY prescribes a convergence criterion for the iterative method used to solve the network's hydraulic equations. The iterations end when the sum of absolute flow changes in all links divided by the total flow in all links is less than the ACCURACY value. The default for this parameter is 0.001. EPANET will not allow a value smaller than 10^{-5} to be used.

SEGMENTS specifies the maximum number of segments that any pipe can be divided into during the water quality analysis. The default value is 100. The number of pipes reaching this limit can be reported on by asking for a status report in the [REPORT] section.

Examples:

UNITS MGD	*;MGD flow units*
HEADLOSS D-W	*;Darcy-Weisbach head loss formula*
QUALITY TRACE 12	*;Track % of flow from node 12*
HYDRAULICS SAVE test.hyd	*;Save hydraulic results*
ACCURACY .0005	*;Increase the accuracy of*
SEGMENTS 300	*;hydraulic and water quality results*

Purpose:

Describes how water demands and external source concentrations change over time.

Format:

pattern mult1 mult2 ....

Parameters:

pattern	pattern ID number
mult1,	
mult2,	
etc.	multipliers applied to baseline values in consecutive time periods

Remarks:

Use as many lines as it takes to describe all time patterns. If a given time pattern requires more than one line, remember to start each new line with the ID number of the pattern.

A time pattern consists of a collection of multipliers that are applied to a baseline demand or source concentration over a sequence of consecutive time periods. Within a time period, the demand (or source concentration) stays constant at a level equal to the multiplier times the baseline value. The default time period length is 1 hour, but this can be changed in the [TIMES] section.

There is no limit on the number of patterns or multipliers per pattern. However, system memory is conserved if you number the patterns in order beginning with 1. If the duration of a pattern is less than the total duration of the simulation, the pattern will repeat itself. For example, suppose you want to conduct a 5-day simulation where hourly demands repeat themselves on a daily cycle. Then your time patterns need only contain 24 multipliers.

Nodes are assigned to specific demand time patterns in the [JUNCTIONS] or [DEMANDS] sections, and to source concentration time patterns in the [SOURCES] section. Unless assigned to a specific pattern in one of these sections, the default pattern associated with a node's demand is pattern 1. For contaminant sources, the default is to have no pattern, meaning there will be no time variation in source strength.

By default, all multipliers for all time periods in all patterns are 1. Thus if you do not define any time patterns nor make any assignment of nodes to time patterns, demands and source concentrations will never change from their baseline levels during the course of the simulation.

Examples:

```
1 1.1 1.3 1.5      ;Pattern 1 extends over 5 time periods with
1 1.1 .87          ;multipliers ranging from .87 to 1.5

2 0 150 0 0 0      ;Pattern 2 is used to describe a fire flow condition
                   ;that exists in time period 2 at a node that
                   ;otherwise would not have any demand
```


Purpose:

Provides a description of each pipe in the network.

Formats:

id node1 node2 length diam rcoeff (lcoeff) (CV)

Parameters:

id	link ID
node1	ID of beginning node
node2	ID of ending node
length	pipe length, ft (m)
diam	pipe diameter, inches (mm)
rcoeff	roughness coefficient, unitless for Hazen-Williams or Chezy-Manning headloss formulas, millifeet (mm) for Darcy-Weisbach formula
lcoeff	optional minor loss coefficient (0 if not specified)
CV	used if the pipe contains a check valve.

Remarks:

One line should appear for each pipe.

A headloss formula can be specified in the [OPTIONS] section. The default is the Hazen-Williams formula. Note that the units of a Darcy-Weisbach roughness coefficient are millifeet (or mm for SI units).

A [PIPES] section is required.

Examples:

```
12  34 45 1200 8 120      ;Pipe with Hazen-Williams roughness
                          ;coefficient
123 34 65 2500 10 .8 5    ;Pipe with Darcy-Weisbach roughness and
                          ;minor loss coefficient
56  12  7 1200 8 120 CV   ;Pipe with check valve preventing flow
                          ;from Node 7 to 12
```

Section: [PUMPS]

Purpose:

Describes each pump in the network and its characteristic curve.

Formats:

id node1 node2 hp
id node1 node2 h1 q1
id node1 node2 h0 h1 q1 h2 q2
id node1 node2 h0 h1 q1 h2 q2 q3

Parameters:

id	link ID
node1	ID of node on inlet side of pump
node2	ID of node on discharge side of pump
hp	pump power rating, hp (kw)
h0	shutoff head, ft (m)
h1, q1	design head, ft (m), and design flow
h2, q2	head, ft (m) and flow at upper end of normal operating flow range
q3	maximum flow in extended flow range

Remarks:

One line of either format should appear for each pump.

The first format is used for pumps where the characteristic curve is unknown and a constant power output is assumed.

The second format is used for a "standard" pump curve with no extended flow range, where the cutoff head is 133% of the design head and the maximum flow is twice the design flow.

The third format describes a pump curve with no extended flow range.

Section: [PUMPS] (continued)

The last format describes a characteristic curve with an extended flow range. If q3 equals q2, then the extended flow range begins at q2 and follows the slope of the pump curve at this point until zero head is reached. If q3 is greater than q2, then the extended curve is a straight line between these two flows.

Graphical examples of the input requirements for the various types of pump curves are shown in Figure 4.2 on the following page.

Unless modified in the [STATUS] or [CONTROLS] sections, all pumps are assumed to be operating throughout the simulation.

The program automatically prevents reverse flow through a pump, and issues warning messages when a pump is operating out of its normal range.

Variable speed pumps can be modelled by establishing speed settings in the [STATUS] and [CONTROLS] sections. See descriptions of these sections for details.

Examples:

```
101  1  2  200                          ;Constant horsepower pump
102  3  4  50  1200                     ;Standard pump curve
193  5  6  100 75 1000 50 1200 1500     ;Custom curve with extended range
```

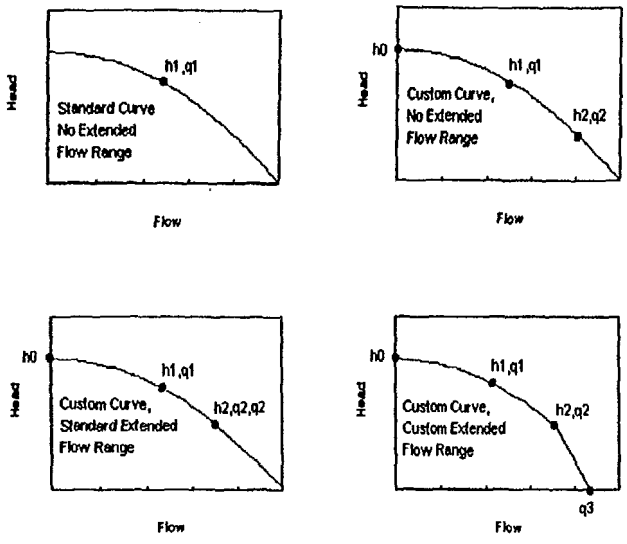

Figure 4.2 Examples of Pump Curve Input Requirements

Section: **[QUALITY]**

Purpose:

Establishes the initial water quality level at network nodes at the start of a simulation.

Formats:

node1 (node2) quality

Parameters:

node1,	
node2	node ID's
quality	initial quality, (concentration for chemical constituents, hours for water age, or percent for source tracing)

Remarks:

Use as many lines as needed to specify the initial water quality throughout the network.

Each line can either specify water quality at a single node or for a range of nodes.

The units of water quality depend on the type of analysis to be performed: concentration is used for chemical propagation, hours are for water age, and percent is used for source flow tracing.

Remember to change the entries in this section when you change the type of water quality analysis being performed.

If not set in this section, a nodes's initial water quality is assumed to be 0.

Examples:

1 23 1	*;Nodes 1 to 23 have initial quality of 1.*
10 .1	*;Node 10's initial quality is changed to .1.*

Section: [REACTIONS]

Purpose:

Specifies reaction rate coefficients.

Formats:

GLOBAL BULK	*bulkcoeff*
GLOBAL WALL	*wallcoeff*
BULK	*pipe1 (pipe2) bulkcoeff*
WALL	*pipe1 (pipe2) wallcoeff*
TANK	*node1 (node2) bulkcoeff*

Parameters:

bulkcoeff	bulk rate coefficient, days-1
wallcoeff	wall rate coefficient, ft/day (m/day)
pipe1, *pipe2*	pipe ID's
node1, *node2*	tank ID's

Remarks:

Default reaction rate coefficients are 0 for all pipes and tanks.

GLOBAL sets a single coefficient for either bulk reactions or pipe wall reactions that applies throughout the network.

BULK and **WALL** establish reaction coefficients for individual pipes, or groups of pipes in the network. These will override any global coefficient.

TANK establishes a reaction coefficient for individual tanks or groups of tanks. This will override any global bulk coefficient.

Section: [REACTIONS] (continued)

Note that the bulk reaction coefficient has units of days^{-1} while the wall reaction coefficient has units of ft/day (or m/day). One way to compare the relative magnitude of these two types of coefficients is to divide the wall coefficient by the hydraulic radius of the pipe (i.e., 1/2 the pipe radius). The resulting quantity will have the same units as the bulk coefficient, days^{-1}.

Remember to use negative signs on all reaction coefficients that represent substance decay.

Examples:

```
                    Example 1:
GLOBAL BULK -.1     ;Global bulk decay throughout network of .1/day,
BULK  23  52  -.5   ;modified to .5/day for pipes 23 to 52,
TANK 102  .05       ;and a re-growth rate of .05/day in Tank 102
                    ;There is no wall reaction.

                    ;Example 2:
GLOBAL BULK -.5     ;Global bulk decay throughout network of .5/day.
GLOBAL WALL -1.5;Global wall decay of 1.5 ft/day.
WALL 32 -2.0        ;Pipe 32 has wall decay of 2 ft/day.
```

Section: [REPORT]

Purpose:

Describes the contents of the output report.

Formats:

FILE	*filename*
STATUS	*option*
PAGESIZE	*lines*
NODES	*node1 (node2)*
NODES	NONE
LINKS	*link1 (link2)*
LINKS	NONE
variable BELOW	*value*
variable ABOVE	*value*

Parameters:

filename	name of report file
option	YES, FULL or NO
lines	number of lines per page in output report
node1, *node2*	node ID numbers
link1, *link2*	link ID numbers
variable	output variable name:

DEMAND	(in flow units)
ELEVATION	(in ft or m)
GRADE	(in ft or m)
PRESSURE	(in psi or m)
QUALITY	(in concentration units, hours, or %)
DIAMETER	(in inches or mm)
FLOW	(in flow units)
VELOCITY	(in ft/sec or m/sec)
HEADLOSS	(in ft/kilo-ft or m/km)

value	numerical value

Section: [REPORT] (continued)

Remarks:

FILE specifies the name of a text file to which the output report will be written. Normally this option would only be used when running under Windows since under DOS, the output report file name is given on the command line. Under Windows, the default is not to save the output report to a file.

STATUS is used to include or exclude system status reports from being generated every time hydraulic conditions change during the simulation. The default is to exclude these reports. A FULL status report includes information for each solution trial of the hydraulic equations and is normally used only for de-bugging hydraulically unbalanced networks.

PAGESIZE sets the number of lines written on each page of the output report. The default is 55.

The NODE and LINK lines specify which nodes and links should be included in the output report. Use as many lines as it takes to include all of the items you want reported. The default is to report on all nodes and links. Using NODE NONE or LINK NONE eliminates any node or link output, respectively.

The last format tells EPANET to report on those nodes and links whose computed variables meet a certain criterion. Multiple criteria are connected by OR's. For example, PRESSURE BELOW 30, PRESSURE ABOVE 100, and QUALITY BELOW 1 will report all nodes that meet one or more of these conditions. This will be in addition to any nodes or links specified in the NODE and LINK lines.

Examples:

NODE 12	*;Report on Nodes 12 and*
NODE 22 36	*;22 through 36, as well as*
PRESSURE BELOW 30	*;nodes with pressure below 30 psi.*
LINK NONE	*;No links are reported on.*

Section: [ROUGHNESS]

Purpose:

Provides an alternative to the [PIPES] section for easily adjusting roughness coefficients for groups of pipes.

Formats:

ADD *value*
MULTIPLY *value*
pipe1 (pipe2) roughcoeff

Parameters:

value	adjustment value
pipe1, *pipe2*	pipe ID's
roughcoeff	roughness coefficient, unitless for Hazen-Williams or Chezy-Manning headloss formulas, millifeet (mm) for Darcy-Weisbach formula

Remarks:

The first format adds a given amount to each pipe's roughness coefficient. Use a negative value to reduce roughnesses.

The second format multiplies each pipe's roughness coefficient by a given amount.

The third format is used repeatedly for each pipe or group of pipes whose roughness coefficients will be set to a specific value.

This section allows you to easily modify roughness coefficients without having to change them individually in the [PIPES] section. This can prove especially useful during calibration runs.

Example:

```
ADD -5      ;Subtract 5 from the roughness coefficient of each pipe.
12 52 110   ;Set roughness coefficient of pipes 12 through 52 to 110.
```


Section: [SOURCES]

Purpose:

Assigns baseline concentrations to nodes that serve as sources of chemical constituents into the network.

Format:

node concen (pattern)

Parameters:

node	source node ID
concen	baseline concentration of constituent entering the node as an external source
pattern	optional ID of time pattern defined in [PATTERNS] section

Remarks:

Use one line for each node that serves as a constituent source.

The data in this section pertain only to water quality analyses for chemicals, not to water age or source tracing.

For junction nodes, if there is no external source inflow (negative demand) assigned to the node, then the quality at the node always equals the source quality. Use this feature to simulate satellite treatment such as chlorine booster stations.

The optional time pattern ID identifies which time pattern defined in the [PATTERNS] section will be used to vary the source strength about its baseline level over time. If omitted, there is no variation in source strength over time.

Example:

```
102 100 3   ;Node 102 has a baseline source strength of 100 mg/L
            ;which varies over time according to pattern 3
```

Section: [STATUS]

Purpose:

Establishes initial setting of selected links at the start of the simulation.

Format:

link1 (link2) setting

Parameters:

link1, link2	link ID's
setting	link setting at the start of the simulation, which can be: - a pump status (either OPEN or CLOSED), - a pump speed (relative to the speed used to define the pump's characteristic curve in the [PUMPS] section), - a valve setting (pressure, flow or loss coefficient) or status (either OPEN or CLOSED) - a pipe status (either OPEN or CLOSED)

Remarks:

Use one line for each link or range of links whose initial setting you wish to specify.

Normally all pipes are open, all pumps are on (with a speed setting of 1), and all valves are at their original pressure, flow or loss coefficient settings at the start of the simulation. To change a link's status at some future point during the simulation, you would use a rule in the [CONTROLS] section.

You cannot set the status of a pipe containing a check valve.

Example:

```
24 CLOSED      ;Close off pipe 24 at the start of the simulation
1  4  1.2      ;Begin the simulation with pumps 1 through 4
               ;operating at 1.2 times their normal speed
```


Section: [TANKS]

Purpose:

Describes each storage tank or reservoir in the network.

Formats:

node elev (initlevel minlevel maxlevel diam (minvol))

Parameters:

node	node ID
elev	bottom elevation of tank where water level is zero, ft (m)
initlevel	initial water level above tank bottom, ft (m)
minlevel	lowest allowable water level, ft (m)
maxlevel	highest allowable water level, ft (m)
diam	tank diameter, ft (m)
minvol	volume of water below minimum level, ft^3 (m^3).

Remarks:

One line should appear for each tank or reservoir.

For reservoirs you need only enter the node ID and elevation. By definition, the water surface elevation in a reservoir remains fixed while for tanks it varies as flow enters or leaves.

Water surface elevation in tanks equals the bottom elevation plus water level. Tanks are assumed to be cylindrical between their minimum and maximum levels. Non-cylindrical bottom sections can be accommodated by supplying the volume of the section as the last parameter on the line (minvol). See Fig. 4.3 for a description of tank levels. For non-circular tanks, use a diameter equal to 1.128 times the square root of the area.

A [TANKS] section is required.

Examples:

```
101 423 15 10 20 45    ;45 ft diameter tank with variable water
                       ;surface level
102 390                ;Reservoir with fixed water surface
```

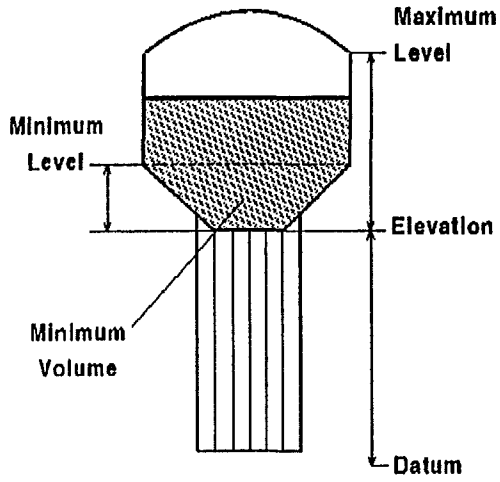

Figure 4.3 Definition of Tank Levels

Section: [TIMES]

Purpose:

Describes various time step parameters used in the simulation.

Formats:

DURATION	*value (units)*
HYDRAULIC TIMESTEP	*value (units)*
QUALITY TIMESTEP	*value (units)*
MINIMUM TRAVELTIME	*value (units)*
PATTERN TIMESTEP	*value (units)*
REPORT TIMESTEP	*value (units)*
REPORT START	*value (units)*

Parameters:

value a time value
units optional time units which can be:
SECONDS (or SEC)
MINUTES (or MIN)
HOURS (default)
DAYS (or DAY)

Remarks:

You need only specify those time parameters that will differ from their default values.

Use of time units is optional. The default units are hours.

DURATION sets the length of the entire simulation (both hydraulic and water quality). The default value is 0 hours, which implies that a steady state run will be made. No water quality analysis will be performed for steady state runs.

HYDRAULIC TIMESTEP determines how often a new hydraulic state of the network is computed. The default time step is 1 hour.

QUALITY TIMESTEP fixes the time step that will be used to track water quality changes through the network. If not supplied, the program uses an internally computed time step based on the smallest time of travel through any pipe in the network. If you ask for a status report in the [REPORT] section, a listing of the quality time steps used throughout the simulation will appear in EPANET's output report.

MINIMUM TRAVELTIME establishes the smallest time of travel through a pipe recognized by EPANET. Travel times smaller than this number are set equal to it. (Travel times through pumps and valves are instantaneous and are not affected by this limit.) The default minimum travel time is 1/10 the hydraulic time step.

PATTERN TIMESTEP determines the length of a time pattern period (i.e., the period of time over which water demands and constituent source strengths remain constant). EPANET will adjust your HYDRAULIC TIMESTEP to be no greater than your designated PATTERN TIMESTEP. The default time pattern period is 1 hour.

REPORT TIMESTEP determines the interval of time between which network conditions are reported on. If need be, EPANET will reduce your HYDRAULIC TIMESTEP so that it is no greater than the REPORT TIMESTEP. The default value is 1 hour.

REPORT START specifies at what time into the simulation results should begin to be reported. The default value is 0.

Examples:

DURATION 120	*;120 hour (5 day) simulation period*
QUALITY TIMESTEP 2 MIN	*;2 minute water quality time step*
PATTERN TIMESTEP 2	*;2 hour interval between changes in ;demands*
REPORT TIMESTEP 2 HOURS	*;Reports are generated every 2*
REPORT START 2 DAYS	*;hours beginning on day 2*

Purpose:

Attaches a descriptive title to the problem being analyzed.

Format:

Up to three lines of 80 or less characters containing the title of the problem being analyzed.

Remarks:

The [TITLE] section is optional.

Section: [VALVES]

Purpose:

Describes each control valve in the network.

Format:

id node1 node2 diam type setting (losscoeff)

Parameters:

id	link ID
node1	ID of node on upstream side of valve
node2	ID of node on downstream side of valve
diam	valve diameter, inches (mm)
type	type of valve: PRV for pressure reducing valve, PSV for pressure sustaining valve, PBV for pressure breaker valve, FCV for flow control valve, TCV for throttle control valve,
setting	pressure setting for PRVs, PSVs and PBVs in psi (m), flow setting for FCVs, or loss coefficient for TCVs
losscoeff	minor loss coefficient for fully opened valve (0 if not specified)

Remarks:

One line should appear for each control valve. Check valves are identified in the [PIPES] section, not here.

Control valves should not be connected directly to tanks or reservoirs.

Note that pressure settings for valves are pressures and not total head (or hydraulic grade line elevation).

Examples:

```
301  12  34  8 PRV 75    ;Valve 301 is an 8" PRV that keeps the
                         ;pressure at Node 34 below 75 psi.
```


4.4 Verification File Format

The verification file provides an optional means of checking that the links specified in the input file connect the correct pair of nodes together. If you choose to use a verification file, its name should appear in the [OPTIONS] section of the input file using a line that reads:

VERIFY *filename*

where *filename* is the name of the verification file.

The verification file consists of a single section whose format is:

Section: [VERIFICATION]

Purpose:

Verifies network node/link connectivity.

Format:

node link1 link2 ...

Parameters:

node	node ID
link1 *link2*, etc.	ID's of all links connected to node.

Remarks:

Include one line for each node in the network.

The file can contain blank lines and it treats the semicolon (;) as a signal that the rest of the line is a comment. EPANET will report an error message if any inconsistencies between the connections established in the input file and those in the verification file are found. A warning message will be issued if all nodes are not listed in the verification file.

4.6 Map File Format

The Windows version of EPANET allows you to view simulation results on a map of the network being analyzed. To use this feature you must first create a file that contains the X-Y coordinates of the network nodes included in the map. The name of this file should appear in the [OPTIONS] section of the EPANET input file using a line that reads:

MAP *filename*

where *filename* is the name of the map file. This will cause the map to be displayed automatically after a successful simulation. If you do not specify a map in an EPANET input file or you wish to change to another map, you can use a menu option in the Windows version of EPANET to specify the name of the map file to be displayed (see Section 6.3).

The contents of the map file are divided into the following sections:

[COORDINATES]	specifies nodal X-Y coordinates
[LABELS]	specifies location and text of labels
[END]	signals end of map file

The file can contain blank lines and it treats the semicolon (;) as a signal that the rest of the line is a comment. An example map file is shown in Figure 4.4. The following pages describe the formats of the [COORDINATES] and [LABELS] sections.

```
================================
[COORDINATES]
;Node          X-coord     Y-coord
;--------------------------------
  2              50          90
  9              10          70
 10              20          70
 11              30          70

[LABELS]
;X-coord       Y-coord     Label
;--------------------------------
  0              70        "Source"
 12              68        "Pump"
 55              90        "Tank"

[END]
================================
```

Figure 4.4 Example Map File

Section: **[COORDINATES]**

Purpose:

Assigns map coordinates to network nodes.

Format:

node Xcoord Ycoord

Parameters:

node	node ID
Xcoord	horizontal coordinate
Ycoord	vertical coordinate

Remarks:

Include one line for each node displayed on the map.

The coordinates represent the distance from the node to an arbitrary origin at the lower left of the map. Any convenient units of measure for this distance can be used.

There is no requirement that all nodes be included in the map, and their locations need not be to actual scale (such as when trying to depict a cluster of nodes that are close to one another).

Section: [LABELS]

Purpose:

Assigns map coordinates to text labels.

Format:

Xcoord Ycoord "label" (node)

Parameters:

Xcoord	horizontal coordinate
Ycoord	vertical coordinate
"label"	label text (in double quotes)
node	ID of optional anchor node

Remarks:

Include one line for each label on the map.

The coordinates refer to the upper left corner of the label.

The optional anchor node anchors the label to the node when the map is re-scaled during zoom-in operations.

4.6 Summary of Default Values and Units

The only mandatory sections required in an EPANET input file are the [JUNCTIONS], [TANKS], and [PIPES] sections. Table 4.1 summarizes the default values used by EPANET in lieu of specific instructions supplied in other input sections. Table 4.2 lists the units in which the various input parameters must be expressed. The "flow units" in this table can correspond to either gallons per minute (the default), cubic feet per second, million gallons per day, or liter per second, depending what option is specified for UNITS in the [OPTIONS] section. SI (metric) units apply only if SI is designated for UNITS.

Table 4.1 *Summary of Default Parameter Values*

Parameter	Default Value	Relevant Section
Nodal Demands	0 gpm	[JUNCTIONS]
		[DEMANDS]
Initial Quality	0	[QUALITY]
Source Quality	0	[SOURCES]
Time Pattern Multipliers	1 for all patterns	[PATTERNS]
Demand Time Patterns	Pattern 1 for all nodes	[JUNCTIONS]
		[DEMANDS]
Source Time Patterns	No Pattern	[SOURCES]
Time Pattern Time Step	1 hour	[TIMES]
Simulation Duration	0 hours (steady state)	[TIMES]
Hydraulic Time Step	1 hour	[TIMES]
Headloss Formula	Hazen-Williams	[OPTIONS]
Flow Units	GPM	[OPTIONS]
Hydraulic Trial Limit	40	[OPTIONS]
Hydraulic Accuracy	.001	[OPTIONS]
Specific Gravity	1.0	[OPTIONS]
Viscosity	1.1×10^{-5} ft^2/sec	[OPTIONS]
Diffusivity	1.3×10^{-8} ft^2/sec	[OPTIONS]
Water Quality Analysis	None	[OPTIONS]
Reaction Rates	0	[REACTIONS]
Pipe Segment Limit	100 per pipe	[OPTIONS]
Minimum Travel Time	Hydraulic Step / 10	[TIMES]
Reporting Start Time	0 hours	[TIMES]
Reporting Time Step	1 hour	[TIMES]
Lines per Report Page	55	[REPORT]
Nodes Reported On	All	[REPORT]
Links Reported On	All	[REPORT]
Status Reports Generated	No	[REPORT]

Table 4.2 Summary of Input Parameter Units

Parameter	English Units	SI (Metric) Units
Junction Elevation	feet	meters
Junction Demand	flow units	flow units
Tank Bottom Elevation	feet	meters
Tank Levels	feet above bottom	meters above bottom
Tank Diameter	feet	meters
Tank Minimum Volume	cubic feet	cubic meters
Junction/Tank Quality		
Chemical	milligrams/liter (or user-supplied)	same as English
Age	hours	
Source Trace	percent	
Pipe Length	feet	meters
Pipe Diameter	inches	millimeters
Pipe Roughness		
Hazen-Williams	none	none
Darcy-Weisbach	millifeet	millimeters
Chezy-Manning	none	none
Minor Loss Coefficient	none	none
Pump Power Rating	horsepower	kilowatts
Pump Head	feet	meters
Pump Flow	flow units	flow units
Pump Speed Setting	none	none
Valve Diameter	inches	millimeters
Valve Pressure Setting	pounds per square inch	meters
Valve Flow Setting	flow units	flow units
Bulk Reaction Coeff.	$days^{-1}$	$days^{-1}$
Wall Reaction Coeff.	feet/day	meters/day
Specific Gravity	none	none
Viscosity	square feet per second	square meters per second
Diffusivity	square feet per second	square meters per second

CHAPTER 5

RUNNING EPANET UNDER DOS

5.1 General Instructions

Step 1. Create an Input File

To run EPANET under DOS you first create an input file that describes the network being simulated. This file must be created with an editor or word processor that saves its text in ASCII format. The format of the input file has been described in Chapter 4. You might also want to prepare a verification file, following the format described in Chapter 4, that will verify the nodal connections contained in the input file.

Step 2. Invoke the EPANET Simulator

Assuming that your current directory is the same one in which the EPANET files were installed, the command issued from the DOS prompt for running an EPANET simulation is:

EPANET inpfile rptfile

where **inpfile** is the name of the input file and **rptfile** is the name of a file that will contain the output report with the simulation results. Note that if either of these files resides in a different directory than the EPANET files, then their names must include their full directory paths.

You might prefer to keep your network data files in different directories than your EPANET program files, especially if you will be working on many different network analyses. To avoid the need to supply full path names for your data files you can add the EPANET directory to the path variable that DOS maintains, and then launch the program directly from any directory you choose. Consult your DOS manual for instructions on setting up your path.

Step 3. View the Output Report

To view the output report over the video display you can employ a file viewer program capable of handling large files. Such a program, BROWSE.COM, has been installed in your EPANET directory. To use it, simply enter the command

BROWSE rptfile

where **rptfile** is the name of your EPANET output report file. Then use the arrow keys to move through the file one line at a time, or use the Page Up and Page Down keys to move one page at a time. You exit the viewer by pressing the Escape key. In addition, you can be print the output report by issuing the DOS PRINT command as follows:

PRINT rptfile

5.2 Contents of the Output Report

EPANET's output report consists of four different types of tables. If the STATUS option was set to YES or FULL in the [REPORT] section of the input file, a **SYSTEM HYDRAULIC STATUS** table will be produced at the start of every hydraulic time step or whenever one of the following events occurs first:

1. a filling tank reaches its maximum level or an emptying tank reaches its minimum level,

2. the control time for a pump, valve or pipe is reached or the control level of a tank is reached,

3. a reporting period occurs.

If a full status report was requested, each System Hydraulic Status table will be preceded by a listing of the accuracy achieved at each iteration of the method used to hydraulically balance the network and will show which links are changing status (e.g., opening and closing) during these iterations. Normally this level of detail is needed only to debug systems that fail to converge hydraulically.

The SYSTEM HYDRAULIC STATUS table itself displays the following items:

1. whether the system is hydraulically balanced or not, the number of iterations required and the accuracy achieved,

2. the total water demand exerted by the system

3. the water surface elevation of each storage node and whether it is filling or emptying

4. the status (OPEN or CLOSED) of each pump and valve

5. those pipes which have been closed off.

If a water quality analysis is being made, a second type of status table, the **SYSTEM WATER QUALITY STATUS** table will appear next. For each hydraulic time step, this table displays the water quality time step and the number of pipes that required more than the maximum allowable number of segments.

The third type of table presents **NODE RESULTS** at each reporting period of the simulation. Unless changed in the [TIMES] section of the input file, the reporting interval is 1 hour. For each node that has been flagged for reporting (the default is to report on all nodes) the following information is produced:

1. Node ID

2. Elevation

3. Demand flow (negative values denote source flow)

4. Hydraulic grade (elevation + pressure head)

5. Pressure

6. Chemical concentration, age of water or percent of flow from a given source, depending on the type of water quality analysis being made (only for non-steady state runs).

For tank nodes, a positive value for demand flow means that water flows into the tank, while a negative value means that water flows out of the tank. The [REPORT] section of the input file allows you to limit output to only those nodes below or above specific limits on the above variables. This helps reduce the amount of output produced and focus in on critical points in the network.

The final type of table presents **LINK RESULTS** at the end of each reporting period. Each link flagged for output reporting (the default is to report on all links) has the following items listed:

1. Link ID

2. Head and tail nodes

3. Diameter

4. Flow rate (negative if from tail node to head node)

5. Velocity

6. Headloss per 1000 ft (or m) of pipe

For valves the headloss reported is the actual change in head across the valve, while for pumps, it is the negative of the head supplied by the pump. Pumps also have their power consumption displayed. As with nodes, the link listing can be limited to those links whose output variables meet criteria specified in the [REPORT] section of the input file.

5.3 The EPANET4D Program

EPANET4D is a DOS batch program that lets you interactively edit an EPANET input file, run the file through EPANET, and then view or print the results all from within a single program. EPANET4D comes supplied with its own file editor and viewer, but you can substitute your own choices for these if you like.

You run EPANET4D by issuing the following command from the DOS prompt:

EPANET4D inpfile rptfile

where inpfile and rptfile are the names of an input and report file. If you are running EPANET4D from the EPANET directory, then make sure that the full path names are included with the input and report file names if they reside in a different directory. Alternatively, you can launch the program from any directory you choose as long as the EPANET directory is included in your DOS path.

After the program loads itself, it displays a menu with the following choices:

```
EPANET MENU
===================

1 - Edit input file

2 - Run EPANET

3 - View report file

4 - Print report file
```



```
5 - Quit
```

and prompts you to enter the number of the choice you wish to select.

Choice 1 executes a text editor program in which you can enter and change the contents of the EPANET input file. The editor is very simple to use and has an on-line help facility which can be accessed by pressing the F1 key. The commands used by the editor are summarized in Figure 5.1. To exit the editor, you press the F4 key. After exiting, you are returned to the menu screen.

Reminder: When exiting the editor, you must respond with Y (for yes) when it asks if you wish to save the changes you made to the file if you want EPANET to recognize these changes.

Choice 2 executes the EPANET simulator. After execution, you are prompted to hit any key which then returns you to the menu screen.

Choice 3 allows you to browse through the EPANET report file after a run has been made. You use the keyboard arrow keys to move up or down through the file a line at a time. The Page Up and Page Down keys will move you a page at a time. You exit the file browser by pressing the Escape (ESC) key.

Choice 4 prints the contents of the report file by calling on the DOS PRINT command. The menu screen re-appears afterwards.

Choice 5 exits the EPANET4D program and returns you to DOS.

```
*                TEXT EDITOR 2.6 COMMAND SUMMARY                *
*-----------------------------------------------------------------*
*      TE [Path][FileName]     *    c- Ctrl  s- Shft  a- Alt     *
*-----------------------------------------------------------------*
*                              File                               *
*-----------------------------------------------------------------*
*        c-KD, c-KQ, F4   Save file and quit editor               *
*        c-KE, F2         Save and/or load another file           *
*-----------------------------------------------------------------*
*                        Cursor Movement                          *
*-----------------------------------------------------------------*
*  c-S, Left    Char left       *  c-QS, Home    Line begin        *
*  c-D, Rt      Char right      *  c-QD, End     Line end          *
*  c-A, c-Left  Prev word       *  c-QE, c-Home  Screen top        *
*  c-F, c-Rt    Next word       *  c-QX, c-End   Screen bottom     *
*  c-E, Up      Prev line       *  c-QR, c-PgUp  File start        *
*  c-X, Dn      Next line       *  c-QC, c-PgDn  File end          *
*  c-W          Scroll up       *  c-QB          To block start    *
*  c-Z          Scroll down     *  c-QK          To block end      *
*  c-R, PgUp    Up 23 lines     *  Tab       Next word, prev line *
*  c-C, PgDn    Dn 23 lines     *  s-Tab     Prev word, prev line *
*  c-Q4     To specified line   *  c-Kn      Set line mark n=0-3  *
*  c-QP     Dn page len lines   *  c-Qn      To line mark n=0-3   *
*-----------------------------------------------------------------*
*                       Insert/Delete                             *
*-----------------------------------------------------------------*
*  c-V, Ins  Insert/Replace     *  c-H, BkSp  Delete left char     *
*  Entr      Split/Insert line  *  c-G, Del   Del char/join line  *
*  c-N, F9   Insert line        *  c-T        Del next word        *
*  c-Y, F10  Delete line        *  c-QY       Del to end line      *
*-----------------------------------------------------------------*
*                             Block                               *
*-----------------------------------------------------------------*
*  c-KB, F7  Mark block start   *  c-KC      Copy block            *
*  c-KK, F8  Mark block end     *  c-KY      Delete block          *
*  c-KH      Hide/display block *  c-KV      Move block            *
*  c-KI      Block right 1 char *  c-KR      Read block from disk  *
*  c-KU      Block left 1 char  *  c-KW      Write block to disk   *
*-----------------------------------------------------------------*
*                        Miscellaneous                            *
*-----------------------------------------------------------------*
*  F1         Display summary of Text Editor commands              *
*  c-QF       Find phrase (1-31 chars) in file or block            *
*  c-QA       Find/replace phrase (1-31 chars) in file or block    *
*  c-KP, F5   Print file or block to LPT1, LPT2, or LPT3           *
*  a-Xa-Ya-Z  ASCII code XYZ = 32-255 on keypad                    *
*  c-P        Then a-Xa-Y on keypad for ASCII XY = 1-31            *
*  c-KS, F3   Temp return to DOS.  Back to TE: EXIT                *
*  c-QW       Set left/right margins, page length                  *
*  c-B        Format paragraph to left/right margins               *
```

Figure 5.1 Text Editor Command Summary

If you don't care for the file editor and viewer that comes with EPANET4D you can substitute your own choices for these programs. The programs you use must be able to accept the name of an input file on the command line and the viewer must be capable of handling large files, since the output from a long term simulation of a large network can be quite considerable in size.

Figure 5.2 lists the contents of the EPANET4D.BAT file. If you would like to use another text editor, replace the word "te.exe" that appears below the "******* Launch file editor *********" line with the name of the new editor. To use another file viewer, replace the word "browse.com" below the "********* Launch file viewer *********" line with the name of the new file viewer. Note that if these programs reside in a different directory than the EPANET directory, you must include the full path name for the program.

```
echo off
rem
rem -- EPANET4D.BAT (DOS Batch File to Implement EPANET Menu Program)
rem
if "%2" == "" goto err1
if "%1" == "%2" goto err2
if not exist %1 copy template %1
if exist %2 del %2
:start
cls
echo.
echo.
echo       E P A N E T   M E N U
echo ==========================
echo.
echo   1 - Edit input file %1
echo.
echo   2 - Run EPANET
echo.
echo   3 - View report file %2
echo.
echo   4 - Print report file %2
echo.
echo   5 - Quit
echo.
echo ==========================
echo.
echo Type the number of your selection:
getdgt
if errorlevel 6 goto start
if errorlevel 5 goto quit
if errorlevel 4 goto printout
if errorlevel 3 goto view
if errorlevel 2 goto run
if errorlevel 1 goto edit
goto start
```

Figure 5.2 Contents of EPANET4D.BAT (Continued on Next Page)

```
:edit
rem
rem ********* Launch editor program *********
te.exe %1
goto start
:run
cls
if "%epanet%"=="32" goto run32
epanet16.exe %1 %2 %3
pause
goto start
:run32
set DOS4G=quiet
echo Running 32-bit version of EPANET...
dos4gw epanet32.exe %1 %2 %3
set DOS4G=
pause
goto start
:view
cls
if not exist %2 goto err3
rem
rem ********* Launch file viewer *********
browse.com %2
goto start
:printout
cls
if not exist %2 goto err3
print %2
goto start
:err1
echo Correct syntax is: EPANET4D inpfile rptfile
echo where inpfile is the name of an input file
echo and rptfile is the name of a report file.
echo.
goto end
:err2
echo Cannot use same name for input and report files.
echo.
goto end
:err3
echo Report file %2 has not been created yet.
echo.
pause
goto start
:quit
cls
:end
```

Figure 5.2 Continued

CHAPTER 6

RUNNING EPANET UNDER WINDOWS

6.1 Overview

The Windows version of EPANET, referred to as EPANET4W, provides a graphical user interface for running network simulations and viewing their results. It allows you to edit EPANET input files, execute EPANET's network simulator, and view EPANET's output in a variety of formats that include:

- color-coded network maps
- time series plots
- tabular reports.

This chapter assumes that you have a basic understanding of how to work with Windows applications, and are familiar with the different parts of a window (such as the menu bar, the control-menu box, and the minimize and maximize buttons) and with mouse operations.

Figure 6.1 shows how the EPANET4W workspace might appear at some point during a run. It gives examples of the different types of windows that the program can generate. These include:

1. a window listing the network's input data
2. a Browser window that controls what aspect of the network simulation results should be viewed
3. a window with a map of the network
4. windows that display output results in tabular form
5. windows that display time series graphs of output results.

The figure also shows the program's menu bar across the top of the workspace. Using the windows version of EPANET involves making a repeated sequence of choices from this menu to select, edit and run an EPANET input file (or select a previously saved output file), and view the results in the form of maps, graphs, and tables. The following paragraphs explain these various procedures.

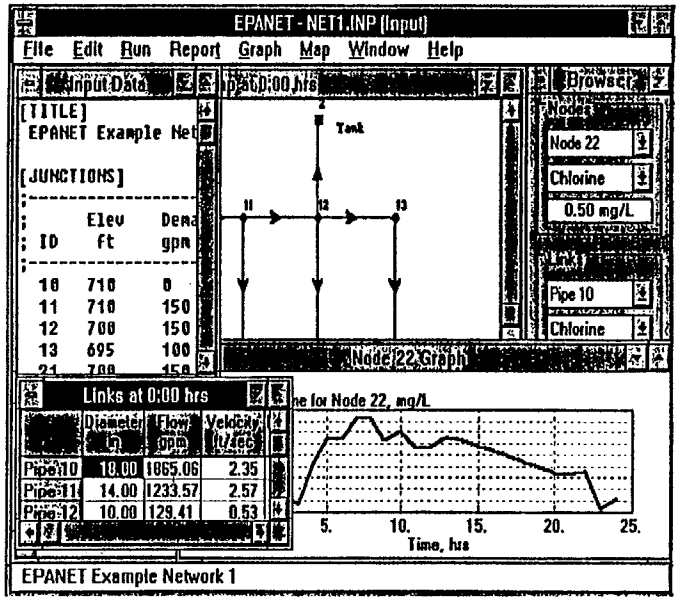

Figure 6.1 Example Contents of the EPANET4W Workspace

Note: EPANET4W allows you to keep multiple windows loaded in its workspace at one time. To conserve system resources, it is recommended that you close windows when they are no longer needed by double-clicking the control-menu box in their upper left corner.

6.2 Launching the Program

EPANET4W can be started either from DOS or from within Windows. To start it from DOS, issue the command:

WIN path\EPANET4W

where path is the full path name of your EPANET directory (e.g., C:\EPANET).

There are two different ways to start up EPANET4W if you are already in the Windows environment:

Method 1. Double click the EPANET icon in the EPANET program group within Program Manager.

Method 2. From the Program Manager, select **File** from the main menu, and then select the **Run** option under it. When prompted for the command line to use, enter **path\EPANET4W** where path is the full path name of your EPANET directory (e.g., C:\EPANET).

6.3 Operating Procedures

Getting Help

EPANET4W comes with a complete Help facility that functions the same as other Windows Help systems. You access it by selecting an option from the Help menu or by pressing the F1 key. From the Help menu you can choose to view the system's table of contents, go directly to the section dealing with input data formats, or search for help on a specific topic.

Opening an Input File

After EPANET4W begins, your first operation should be to open an input file (or previously saved output file) for processing. To open an input file, select **Open Input** from the **File** menu. A file dialog box will appear as shown in Figure 6.2. You can change drives, directories, or file name patterns within this window (the default file name pattern for input files is *.INP). To specify a new file that does not currently exist, type its name into the File Name box. Press the Enter key or click the OK button to load your selected file. Click the Cancel button (or press the Escape key) to cancel the operation. After a file has been selected, its name will appear in the title bar of EPANET4W's main window.

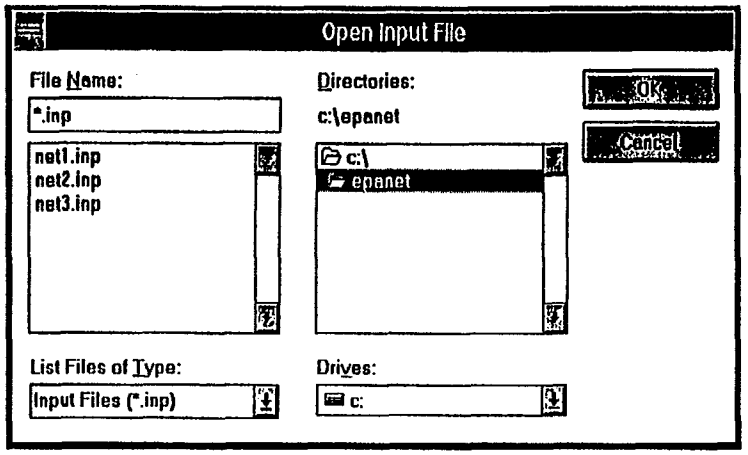

Figure 6.2 File Dialog Box

Viewing the Input File

After you first open an input file its contents will be displayed in a non-editable report window. This window can be moved, resized, and closed when no longer needed. If you are using a new file that has just been created, its contents will contain section headings for the input file formats described in Chapter 4. If you need to view your input file at any other time during an EPANET4W session, simply select **Input Data** from the **Report** menu.

Editing the Input File

To edit the contents of the input file, select **Input Data** from the **Edit** menu. This will load and display your input file in a text editor. The commands used to operate the default editor that ships with EPANET are summarized in Figure 6.3. To exit the editor, you press the F4 key. Be sure to answer yes (Y) when the editor asks if you want to save your changes if you want them to be recognized by EPANET4W. If during an editing session you decide to do some other operation within EPANET4W, such as consult its Help facility to review an input format, the editor window will disappear underneath the EPANET4W window. In this case you can always get back to the editor by selecting **Input Data** from the **Edit** menu once again.

TEXT EDITOR 2.6 COMMAND SUMMARY

TE [Path][FileName] c- Ctrl s- Shft a- Alt

File

c-KD, c-KQ, F4	Save file and quit editor
c-KE, F2	Save and/or load another file

Cursor Movement

c-S, Left	Char left	c-QS, Home	Line begin
c-D, Rt	Char right	c-QD, End	Line end
c-A, c-Left	Prev word	c-QE, c-Home	Screen top
c-F, c-Rt	Next word	c-QX, c-End	Screen bottom
c-E, Up	Prev line	c-QR, c-PgUp	File start
c-X, Dn	Next line	c-QC, c-PgDn	File end
c-W	Scroll up	c-QB	To block start
c-Z	Scroll down	c-QK	To block end
c-R, PgUp	Up 23 lines	Tab	Next word, prev line
c-C, PgDn	Dn 23 lines	s-Tab	Prev word, prev line
c-Q4	To specified line	c-Kn	Set line mark n=0-3
c-QP	Dn page len lines	c-Qn	To line mark n=0-3

Insert/Delete

c-V, Ins	Insert/Replace	c-H, BkSp	Delete left char
Entr	Split/Insert line	c-G, Del	Del char/join line
c-N, F9	Insert line	c-T	Del next word
c-Y, F10	Delete line	c-QY	Del to end line

Block

c-KB, F7	Mark block start	c-KC	Copy block
c-KK, F8	Mark block end	c-KY	Delete block
c-KH	Hide/display block	c-KV	Move block
c-KI	Block right 1 char	c-KR	Read block from disk
c-KU	Block left 1 char	c-KW	Write block to disk

Miscellaneous

F1	Display summary of Text Editor commands
c-QF	Find phrase (1-31 chars) in file or block
c-QA	Find/replace phrase (1-31 chars) in file or block
c-KP, F5	Print file or block to LPT1, LPT2, or LPT3
a-Xa-Ya-Z	ASCII code XYZ = 32-255 on keypad
c-P	Then a-Xa-Y on keypad for ASCII XY = 1-31
c-KS, F3	Temp return to DOS. Back to TE: EXIT
c-QM	Set left/right margins, page length
c-B	Format paragraph to left/right margins

Figure 6.3 Text Editor Command Summary

Hints: You can substitute a different DOS or Windows file editor program for the one supplied with EPANET. Consult Chapter 3 for instructions on how to do this.

If you are using a DOS file editor, then pressing the ALT-ENTER key combination will toggle the editor between appearing in a window and in full-screen mode.

Editing Other Files

At times you might find it necessary to edit other files, such as the map and verification files. There are two ways to do this. One is to invoke the EPANET4W editor for your input file as described earlier, and then from within the editor switch to the file you want to edit. Hitting the F2 key in the editor supplied with EPANET will allow you to do this. Be sure to save your file after making any changes to it. A second approach is to switch back to Program Manager and launch any editor you normally use as a new task to edit your choice of files. Then switch back to EPANET4W.

Running the Input File

Use the **Run** menu to request that the current input file be processed by the EPANET's network simulator. Selecting **Windowed** will run the simulator in a window so that you can observe its progress. If you select **Minimized** the simulator will appear as an icon until it is done processing. Select **Cancel** to cancel the request.

If the run was unsuccessful, EPANET4W will display the error messages generated by the simulator in a report window explaining what went wrong. At this point you could invoke the editor once again to fix your mistakes, leaving the report window displayed on the screen so that you can see where in the input file the errors occurred.

If the run was successful, EPANET4W will display its Browser window and will also draw a map of the network in its Map window, providing that the name of a map file was included in the input data. Instructions on using the Browser window to view different aspects of the output are given below. If there were any warning messages generated, an Output Summary for the run will also be displayed in a report window which will scroll down to the line containing the first warning message. See Viewing an Output Summary below for details.

Opening an Output File

As an alternative to opening an input file for editing and analyzing with EPANET, you can choose to view results generated from a prior session of EPANET4W that were saved to a file. To do this, select **Open Output** from the **File** menu. A file dialog box will appear from which you can select the output file to view. After selecting the file, its name will appear in the title bar of EPANET4W's main window. EPANET4W will then display its Browser window and, if a map file is associated with the output file, will draw a map of the network. The program will not be able to display any status reports or warning messages that were generated when this network was first simulated.

Note: The output file referred to here is not the same as the report file produced when EPANET is run under DOS as described in Chapter 5. It is possible to run EPANET under DOS and have it generate an EPANET4W output file by adding a third file name to the command line as follows:

EPANET inpfile rptfile outfile

where **inpfile** is the name of input data file, **rptfile** is the name of the report file that can be viewed or printed, and **outfile** is the name of the output file that can be accessed under EPANET4W. The EPANET simulator tends to execute about twice as fast when run directly under DOS (and not in a DOS session under Windows). Although it might be more efficient to generate simulation results in this way, you loose the advantage of being able to interactively make changes to the network and quickly visualize their impact.

Opening a Map File

If no map file was specified in the current input data file (or output results file), or the specified map was incorrect, or you simply want to switch to a different map of the network, you can select **Open Map** from the **File** menu. This will open up a file dialog box from which a new map file can be selected.

After viewing the map you might find that it needs to be modified. For example, text labels might need to be re-located. You can use the editor to make these changes to the map file as described earlier under the **Editing Other Files**, and then use the **Open Map** option of the **File** menu to load the updated map.

Saving the Current Output

Select **Save Output** from the **File** menu to save the results obtained from the latest EPANET simulation to a file. This allows you to come back to EPANET4W at a later time to view the results of the current simulation without having to re-run it all over again. Enter the name under which you want to save the current output results in the File Name field of the file dialog box that appears. The suggested file extension to use for output results is ".out". You can use the drive and directory boxes to select new choices for the file's path.

Viewing an Output Summary

A summary report of the current output results can be generated by selecting **Output Summary** from the **Report** menu. At a minimum, the report will summarize the nature of the network being analyzed (e.g., number of nodes and links, head loss equation used, type of water quality analysis performed, etc.). In addition, if the results were generated from running an input file, the report will include any warning messages produced by EPANET (such as pumps operating out of range) and, if requested in the [REPORT] section of the input file, a status report on each tank, pump, and valve throughout the duration of the simulation. This type of information will not be listed if you have selected an output file for viewing. The output summary window can be moved, resized, and closed when no longer needed.

Using the Browser

The Browser window (Figure 6.4) allows you to control how the EPANET output is viewed. This window is used to:

a) select a node view variable from among:
   - i. None
   - ii. Demand
   - iii. Elevation
   - iv. Hydraulic Grade
   - v. Pressure
   - vi. Water Quality (non-steady state runs only)

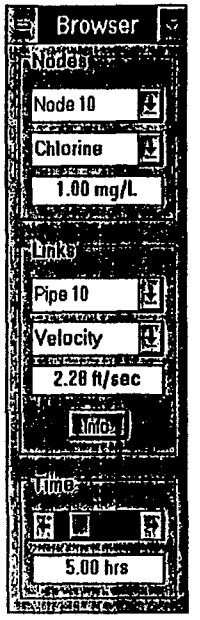

Figure 6.4 The Browser

b) select a link view variable from among:
   - i. None
   - ii. Diameter
   - iii. Flow
   - iv. Velocity
   - v. Headloss
   - vi. Average Water Quality (non-steady state runs only)

c) view the value of the node and link variables for specific nodes and links

d) select a time period for viewing

Functions (a), (b), and (c) are accomplished by making selections from the dropdown list boxes in the Browser's Nodes and Links panels. The upper boxes in each panel contain the list of node and link ID's, respectively. The lower boxes contain node and link view variable choices. The list boxes are activated by clicking on their arrows. A list of options will appear from which you click on the desired choice. Whenever a choice on any of these items is made, the following events will occur:

a) The values of the view variables displayed in the Browser will be updated.

b) The network map will be color-coded corresponding to the current selections for node and link view variables. Nodes are represented as colored circles (tanks/reservoirs are squares) and links as lines between nodes. A legend indicating what value ranges the colors represent can be displayed by selecting Legend from the Map menu.

c) After a specific node or link is selected from the Browser, its location on the map is highlighted.

Whenever you click the mouse on a node or on the midpoint of a link displayed in the map, that node or link is highlighted and the value of its current view variable is displayed in the Browser.

The Links panel contains a button labelled **Info**. Clicking on this button will overwrite the panel with a listing of the input information for the currently selected link. For pipes, this information includes diameter, length, roughness coefficient, minor loss coefficient, and reaction rate coefficients. For pumps it includes the equation of the pump curve. The listing also contains the current status of the link (e.g., open or closed). When you are done viewing this information, simply click anywhere in the listing to restore the Links panel to its original state.

To change the current time period being viewed, you move the slider bar in the Browser's Time panel. To move forward one time period, click the right arrow on the slider bar. To move backwards, click the left arrow. Whenever the time is changed, the values in the Node and Link panels are updated and the map is re-colored to reflect changed conditions within the network. You can simulate a time animation of the map by keeping the mouse button depressed over one of the slider bar arrows. If a steady state run was made, no slider bar will appear in the Time panel.

As with any other window generated by EPANET4W, you can move the Browser to another location by moving the mouse into its title bar, pressing the left button while moving the window to a new location, and then releasing the button. You can also minimize the Browser window to an icon by clicking its Minimize button in the upper right of the window. To restore the window, simply double-click on the icon. You cannot close the Browser window.

Viewing the Map

The appearance of the network map can be modified by making choices from the **Map** menu. The choices and their resulting actions are as follows:

a) **Zoom In** -- allows you to magnify a portion of the map by defining a zoom window. The area bounded by the zoom window will be drawn to fill the entire Map window. To define the zoom window, move the mouse within the Map window to where you want a corner of the zoom window to begin, then click the left mouse button. Next move the mouse until the outline box displayed encompasses the area you wish to zoom in on. Then click the left mouse button once again. Clicking the right mouse button cancels the zoom operation.

b) **Zoom Out** -- restores the map to a state that existed prior to the last zoom in

c) **Redraw** -- redraws the map at its original scale.

d) **Display Legend** -- toggles the display of a node or link legend on and off. The legend can be dragged to a different location on the map by moving the mouse with the left button held down. Double-clicking the left mouse button in the legend will remove it from the map. Clicking the right mouse button within the legend allows you to modify the legend as described next.

e) **Modify Legend** -- displays a dialog box for your choice of node or link legend that lets you define what numerical ranges correspond to a particular color on the map for the current node or link variable. It also lets you change the colors used for the legend (see Figure 6.5). The Default Values button restores the ranges to their internally computed values while the Default Colors button does the same for colors. Modifying the legend can give you a quick picture of where in the network a certain condition holds. For example, the legend shown in Figure 6.5 will display all nodes where the pressure is below 20 psi in the first color.

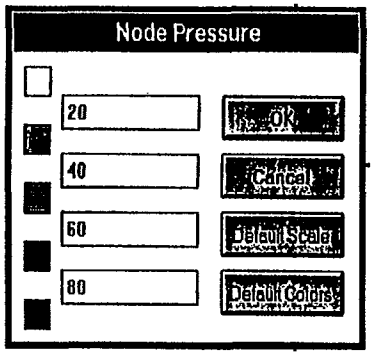

Figure 6.5 Legend Dialog Box

f) **Options** -- displays a dialog box for map labelling and style choices (see Figure 6.6). You can elect to label nodes and links with their ID's and values of the current view variable, change the size of nodes and thickness of links, have flow direction arrows drawn on the links, have pump and valve symbols drawn on the links, change the map's background color, or change the way in which objects on the map are highlighted. (Point highlighting accents the individual object while area highlighting highlights a region around the object.)

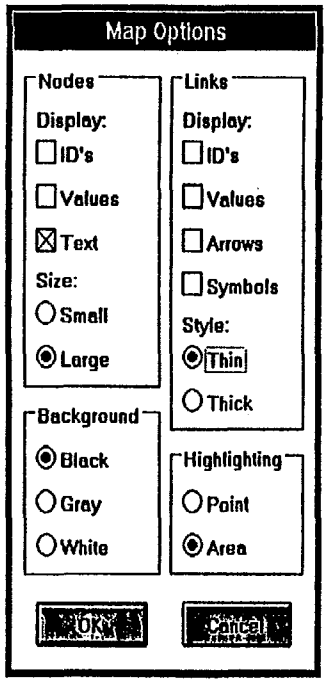

Figure 6.6 Map Options Dialog Box

When the mouse is positioned over the map, the following keyboard-mouse combinations can be used as shortcuts to implement operations on the Map menu:

Shift-Left Mouse Button	--->	Zoom In
Ctrl-Left Mouse Button	--->	Zoom Out
Alt-Left Mouse Button	--->	Redraw
Alt-Right Mouse Button	--->	Options

In addition to the options offered by the Map menu, the horizontal and vertical scrollbars on the Map window can be used to pan across the map either horizontally or vertically. The Map window can also be moved, minimized, and resized, but it can not be closed.

Generating Tables

The **Report** menu can be used to display two types of tables of output results. Selecting **Current Time** from the **Report** menu produces a table showing the values of all variables at the current time period for either all nodes or all links in

the network. Selecting **Time Series** from the same menu creates a table containing the values of all variables for all time periods for either the current node or current link. Recall that the Browser window establishes the current time, current node, and current link. Multiple tables can be displayed in EPANET4W's workspace at one time. These windows can be moved, resized, and, when no longer needed, closed.

Searching Tables

You can search for entries in a table that meet a specified criterion by selecting **Search** from the **Report** menu. The table you wish to search must be the currently active window in the EPANET4W workspace (i.e., have its title bar highlighted -- see **Switching Between Windows** below). A dialog box like the one in Figure 6.7 will appear where you can define your search criterion. After you specify your criterion, EPANET4W will report on the number of items that meet it and will ask if you want to show only those items in the table or not. If you answer yes, then any subsequent searches on the table will be made from among its remaining entries. To restore the table to its original full contents, select Restore from the Report menu.

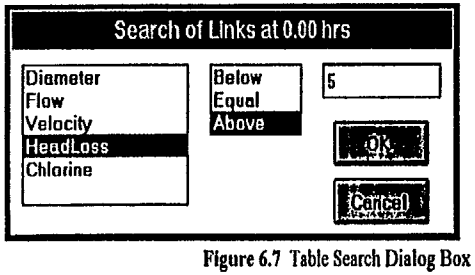

Figure 6.7 Table Search Dialog Box

Generating Graphs

To produce a graph showing how the value of the current view variable for the current node in the Browser window changes over time, select **Current Node** from the **Graph** menu. Select **Current Link** to produce a similar plot for the current link. If the current link is a pump, selecting **Pump Curve** from the **Graph** menu will produce a plot of the pump's characteristic operating curve. Multiple graphs can be displayed within the EPANET4W workspace, and their windows can be moved, resized, and closed when no longer needed.

Customizing Graphs

Select **Options** from the **Graph** menu to customize a graph whose window is currently active (i.e., has its title bar highlighted -- see **Switching Between Windows** below). A dialog box will appear as shown in Figure 6.8. The lower portion of the box lets you customize the appearance of the Y-Axis (the vertical axis) of the graph. If the Auto Scale box is checked, EPANET4W will choose its own axis scaling for you. The Data File box at the top allows you to link a data file containing observed data to the graph. You can either type in the name of the file you wish to use or click on the button to the right of the box to bring up a file dialog box. Each line in the file linked to the graph should contain an X-value (time) and a Y-value to be plotted on the graph. Figures 6.9 and 6.10 display the contents of a typical time series data file and how a graph would look after these data are linked to it. This feature should prove especially useful for model calibration.

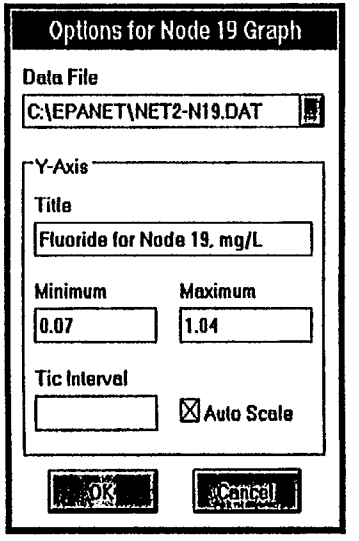

Figure 6.8 Graph Options Dialog

0.25	1.04
2.75	1.04
5.70	1.08
8.60	1.00
12.00	0.81
13.25	0.95
14.73	1.02
17.77	1.01
20.52	0.87
23.53	0.28
27.17	0.98
29.87	0.85
33.92	0.12
35.67	0.17
38.48	0.64
42.08	0.79
44.68	0.87
47.50	0.16
51.17	0.56
53.45	0.70

Figure 6.9 Data to Link With a Graph

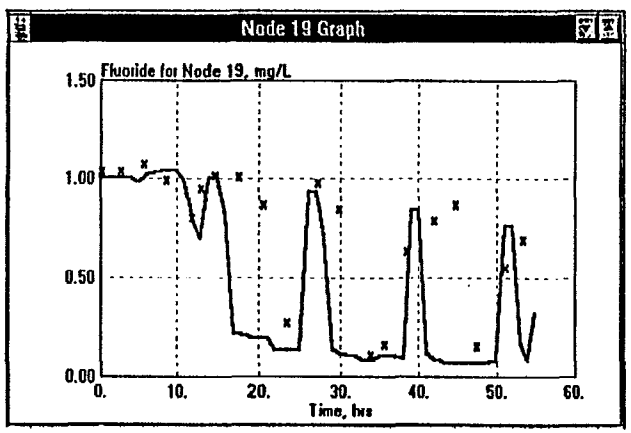

Figure 6.10 Graph With Linked Data

Copying to the Clipboard

If the currently active window is a map, table, report, or graph, selecting **Copy To Clipboard** from the **Edit** menu will copy its contents to the Windows Clipboard.

The copied data or image can then be pasted into other Windows applications. When copying from a table you can first select the range of data to copy. Clicking on the upper-left grayed cell in the table will select the entire table. Clicking on any column's top label will select the entire column. Data copied from tables are stored as text in the Clipboard, while map and graph images are stored as bitmaps.

Printing

Select **Print** from the **File** menu to print the contents of any active window (except the Browser) in the EPANET4W workspace to your Windows default printer. If the active window is a graph or the map, then a dialog box will appear in which you can specify a title for the plot and the page margins to use. Selecting **Printer Setup** from the **File** menu will open up a dialog box from which you can select a different printer and alter certain printer settings, such as printing in portrait or landscape mode.

Switching Between Windows

The **Window** menu offers a convenient means for switching between the windows currently displayed in the EPANET4W workspace. This menu lists the titles of all open windows in the workspace. The currently active window will have a check mark next to it on this list and will appear on top of any other windows in the workspace with its title bar highlighted. To make a different window active simply click on its name in the **Window** menu. Another way to make a currently visible window active is to click anywhere within it.

Exiting EPANET4W

Select **Exit** from the **File** menu to exit EPANET4W.

6.4 Summary of Menu Commands

File	
Open Input	Opens an input data file for processing
Open Output	Opens a previously saved output file for processing
Open Map	Opens a map file and displays its contents
Save Output	Saves the current output results to a file
Print	Prints the contents of the currently active window
Printer Setup	Selects a printer and its features
Exit	Exits the program

Edit

Copy to Clipboard	Copies the contents of the currently active window to the Windows clipboard
Input Data	Edits the current input data file

Run

Windowed	Runs the EPANET simulator in a window
Minimized	Runs the EPANET simulator as an icon
Cancel	Cancels the run request

Report

Input Data	Displays listing of input data
Output Summary	Displays listing of output summary
Current Time	Displays table of all node or link results for current time period
Time Series	Displays table of results for the current node or link for all time periods
Search	Searches currently active table for entries meeting a specified criterion
Restore	Restores currently active table to its original state

Graph

Current Node	Displays time series graph for current view variable at the current node
Current Link	Displays time series graph for current view variable at the current link
Pump Curve	Displays pump curve if the current link is a pump
Options	Links observed data (in a file) to the current graph and customizes its Y-axis scaling

Map

Zoom In	Zooms in on a selected area of the map display
Zoom Out	Restores map to state prior to last zoom in
Redraw	Redraws map at its original scale
Display Legend	Toggles display of node or link legend on and off
Modify Legend	Modifies colors and scale ranges for displaying node or link values on the map
Options	Changes appearance of the map (e.g., adds labels, adds flow direction arrows, changes node/link size, changes background color)

Window

Window List	Activates selected window

Help

Contents	Displays help system's table of contents
Input Formats	Provides help on input data formats
Search for Help On	Provides help on a specific topic
About EPANET	Displays EPANET version number

CHAPTER 7

EXAMPLE APPLICATIONS

7.1 Introduction

This chapter presents three example applications of the EPANET program. The data sets for each example are provided on the EPANET distribution disk and should already reside in your EPANET directory if you followed the installation instructions in Chapter 3. The file names of the data sets are:

NET1.INP	(Input data for Example 1)
NET1.MAP	(Map coordinates for Example 1)
NET2.INP	(Input data for Example 2)
NET2.MAP	(Map coordinates for Example 2)
NET2-N11.DAT	(Node 11 sampling results for Example 2)
NET2-N19.DAT	(Node 19 sampling results for Example 2)
NET2-N34.DAT	(Node 34 sampling results for Example 2)
NET3.INP	(Input data for Example 3)
NET3.MAP	(Map coordinates for Example 3)

7.2 Example 1 - Chlorine Decay

Figure 7.1 depicts a small distribution system that will be used to illustrate how EPANET can model chlorine decay. Pump 9 takes water from a reservoir at Node 9 and feeds it into a system containing a storage tank at Node 2. The operation of the pump is controlled by the level in Tank 2. A 24 hour simulation of chlorine transport will be made assuming a first order decay of chlorine in the bulk flow occurs with a rate constant of -0.5/day and a first order wall reaction occurs with a rate constant of -1 ft/day. The input data for this problem appears in Figure 7.2 (comments have been added throughout the data set to enhance its readability -- use of such comments is purely optional).

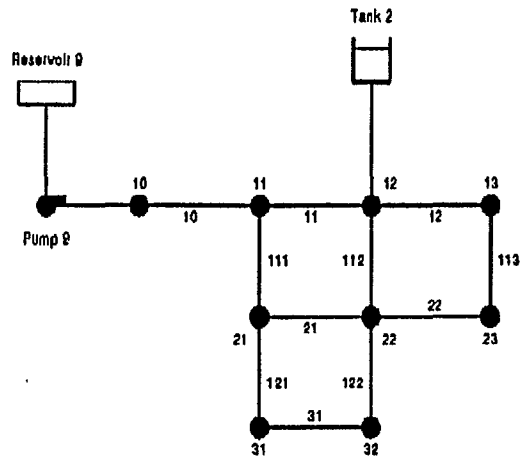

Figure 7.1 Network for Example 1

```
[TITLE]
 EPANET Example Network 1

[JUNCTIONS]
;-------------------------
;      Elevation   Demand
; ID     ft         gpm
;-------------------------
  10     710          0
  11     710        150
  12     700        150
  13     695        100
  21     700        150
  22     695        200
  23     690        150
  31     700        100
  32     710        100

[TANKS]
;-----------------------------------------
;     Elev.   Init.   Min.   Max.   Diam.
; ID   ft    Level   Level  Level    ft
;-----------------------------------------
   2  850     120     100    150    50.5
   9  800
```

Figure 7.2 Input Data for Example 1 (Continued on Next Page)

```
[PIPES]
;-----------------------------------------------
;      Head    Tail    Length   Diam.   Rough.
;ID    Node    Node     ft       in     Coeff.
;-----------------------------------------------
10      10      11    10530     18      100
11      11      12     5280     14      100
12      12      13     5280     10      100
21      21      22     5280     10      100
22      22      23     5280     12      100
31      31      32     5280      6      100
110      2      12      200     18      100
111     11      21     5280     10      100
112     12      22     5280     12      100
113     13      23     5280      8      100
121     21      31     5280      8      100
122     22      32     5280      6      100

[PUMPS]
;-----------------------------
;    Head   Tail    Design H-Q
;ID  Node   Node    ft     gpm
;-----------------------------
 9     9     10     250   1500

[CONTROLS]
;----------------------------------------
 LINK 9 OPEN IF NODE 2 BELOW 110
 LINK 9 CLOSED IF NODE 2 ABOVE 140

[PATTERNS]
;----------------------------------------
; ID  Multipliers.....
;----------------------------------------
  1   1.0  1.2  1.4  1.6  1.4  1.2
  1   1.0  0.8  0.6  0.4  0.6  0.8

[QUALITY]
;------------------------
;          Initial
;Nodes     Concen. mg/L
;------------------------
  2  32     0.5
  9         1.0
  2         1.0

[REACTIONS]
;----------------------------------------
 GLOBAL BULK  -.5          ; Bulk decay coeff.
 GLOBAL WALL  -1           ; Wall decay coeff.

[TIMES]
;----------------------------------------
```



```
 DURATION 24          ; 24 hour simulation period
 PATTERN TIMESTEP 2 ; 2 hour pattern time period

[OPTIONS]
;----------------------------------------
 QUALITY  Chlorine  ; Chlorine analysis
 MAP      Net1.map  ; Map coordinates file

[END]
```

Figure 7.2 Continued

These data also appear in the file NET1.INP in your EPANET directory. You can run the program on this data several different ways:

a) from DOS, issue the command:

EPANET NET1.INP NET1.RPT

and use a file viewer to view the contents of NET1.RPT or have it printed,

b) from DOS, issue the command:

EPANET4D NET1.INP NET1.RPT

and select to run EPANET from the menu and then view or print the output file NET1.RPT,

c) if you've installed EPANET for Windows, then launch it, open the NET1.INP file, run the file through EPANET, and then look at the results using EPANET4W's various view options.

A portion of the output file, NET1.RPT, produced by methods (a) and (b) above is shown in Figure 7.3.

```
==========================================================

  Page 1                          Thu Jul 29 09:48:12 1993

  **************************************************************
  *                        E P A N E T                         *
  *                 Hydraulic and Water Quality                *
  *                 Analysis for Pipe Networks                 *
  *                        Version 1.1                         *
  **************************************************************
```

EPANET Example Network 1

Input Data File net1.inp
Verification File .....
Hydraulics File .....
Map File Net1.map
Number of Pipes 12
Number of Nodes 11
Number of Tanks 2
Number of Pumps 1
Number of Valves 0
Headloss Formula ..... Hazen-Williams
Hydraulic Timestep ..... 1.00 hrs
Hydraulic Accuracy 0.001000
Maximum Trials 40
Quality Analysis ..... Chlorine
Minimum Travel Time ..... 6.00 min
Maximum Segments per Pipe 100
Specific Gravity 1.00
Kinematic Viscosity ..... 1.10e-005 sq ft/sec
Chemical Diffusivity ..... 1.30e-008 sq ft/sec
Total Duration ..... 24.00 hrs
Reporting Criteria:
All Nodes
All Links

Node Results at 0:00 hrs:

Node	Elev. ft	Demand gpm	Grade ft	Pressure psi	Chlorine mg/L	
10	710.00	0.00	1004.50	127.61	0.50	
11	710.00	150.00	985.31	119.29	0.50	
12	700.00	150.00	970.07	117.02	0.50	
13	695.00	100.00	968.86	118.66	0.50	
21	700.00	150.00	971.55	117.66	0.50	
22	695.00	200.00	969.07	118.75	0.50	
23	690.00	150.00	968.63	120.73	0.50	
31	700.00	100.00	967.35	115.84	0.50	
32	710.00	100.00	965.63	110.77	0.50	
2	850.00	765.06	970.00	52.00	1.00	Tank
9	800.00	-1865.06	800.00	0.00	1.00	Reservoir

Figure 7.3 Portion of Output Report for Example 1 (Panel 1 of 3)

Page 2 EPANET Example Network 1

Link Results at 0:00 hrs:

Link	Start Node	End Node	Diameter in	Flow gpm	Velocity fps	Headloss /1000ft	
10	10	11	18.00	1865.06	2.35	1.82	
11	11	12	14.00	1233.57	2.57	2.89	
12	12	13	10.00	129.41	0.53	0.23	
21	21	22	10.00	190.71	0.78	0.47	
22	22	23	12.00	120.59	0.34	0.08	
31	31	32	6.00	40.77	0.46	0.33	
110	2	12	18.00	-765.06	0.96	0.35	
111	11	21	10.00	481.48	1.97	2.61	
112	12	22	12.00	189.11	0.54	0.19	
113	13	23	8.00	29.41	0.19	0.04	
121	21	31	8.00	140.77	0.90	0.79	
122	22	32	6.00	59.23	0.67	0.65	
9	9	10		1865.06	96 hp	-204.50	Pump

Node Results at 1:0 hrs:

Node	Elev. ft	Demand gpm	Grade ft	Pressure psi	Chlorine mg/L	
10	710.00	0.00	1006.92	128.65	1.00	
11	710.00	150.00	988.05	120.48	0.45	
12	700.00	150.00	973.13	118.35	0.44	
13	695.00	100.00	971.91	119.98	0.44	
21	700.00	150.00	974.49	118.94	0.43	
22	695.00	200.00	972.10	120.07	0.44	
23	690.00	150.00	971.66	122.04	0.45	
31	700.00	100.00	970.32	117.13	0.41	
32	710.00	100.00	968.63	112.06	0.40	
2	850.00	747.57	973.06	53.32	0.97	Tank
9	800.00	-1847.57	800.00	0.00	1.00	Reservoir

Link Results at 1:00 hrs:

Link	Start Node	End Node	Diameter in	Flow gpm	Velocity fps	Headloss /1000ft
10	10	11	18.00	1847.49	2.33	1.79
11	11	12	14.00	1219.82	2.54	2.83
12	12	13	10.00	130.19	0.53	0.23
21	21	22	10.00	187.26	0.76	0.45
22	22	23	12.00	119.81	0.34	0.08
31	31	32	6.00	40.42	0.46	0.32
110	2	12	18.00	-747.49	0.94	0.34
111	11	21	10.00	477.68	1.95	2.57

Figure 7.3 Panel 2 of 3

Page 3 EPANET Example Network 1

Link Results at 1:00 hrs: (continued)

Link	Start Node	End Node	Diameter in	Flow gpm	Velocity fps	Headloss /1000ft	
112	12	22	12.00	192.14	0.55	0.20	
113	13	23	8.00	30.19	0.19	0.05	
121	21	31	8.00	140.42	0.90	0.79	
122	22	32	6.00	59.58	0.68	0.66	
9	9	10		1847.49	97 hp	-206.92	Pump

Node Results at 2:00 hrs:

Node	Elev. ft	Demand gpm	Grade ft	Pressure psi	Chlorine mg/L	
10	710.00	0.00	1008.43	129.31	1.00	
11	710.00	180.00	989.77	121.22	0.87	
12	700.00	180.00	976.09	119.63	0.81	
13	695.00	120.00	974.02	120.90	0.37	
21	700.00	180.00	975.41	119.34	0.76	
22	695.00	240.00	973.81	120.81	0.38	
23	690.00	180.00	973.33	122.77	0.40	
31	700.00	120.00	969.96	116.98	0.34	
32	710.00	120.00	968.13	111.85	0.31	
2	850.00	516.44	976.06	54.62	0.94	Tank
9	800.00	-1836.44	800.00	0.00	1.00	Reservoir

Link Results at 2:00 hrs:

Link	Start Node	End Node	Diameter in	Flow gpm	Velocity fps	Headloss /1000ft	
10	10	11	18.00	1836.44	2.32	1.77	
11	11	12	14.00	1163.77	2.43	2.59	
12	12	13	10.00	173.00	0.71	0.39	
21	21	22	10.00	150.47	0.61	0.30	
22	22	23	12.00	127.00	0.36	0.09	
31	31	32	6.00	42.20	0.48	0.35	
110	2	12	18.00	-516.44	0.65	0.17	
111	11	21	10.00	492.67	2.01	2.72	
112	12	22	12.00	294.33	0.83	0.43	
113	13	23	8.00	53.00	0.34	0.13	
121	21	31	8.00	162.20	1.04	1.03	
122	22	32	6.00	77.60	0.88	1.08	
9	9	10		1836.44	97 hp	-208.43	Pump

Figure 7.3 Panel 3 of 3

7.3 Example 2 - Fluoride Tracer Analysis

Our second example shows how EPANET can be used in conjunction with tracer studies to calibrate distribution system hydraulics. Figure 7.4 displays a portion of an actual distribution system which was subjected to a fluoride tracer test. Fluoride addition at the treatment plant feeding the network was turned off, and periodic fluoride measurements were taken at several points in the network for 55 hours thereafter. Three of these sampling points are Nodes 11, 19, and 34. Although it was possible to compute hourly total demand variation in the network over this time period from pump station records and recorded tank elevations, no direct measurements were made of either nodal demands or flow velocities. The EPANET model was used to adjust values of individual nodal baseline demands so that predicted fluoride measurements came as close as possible to observed values.

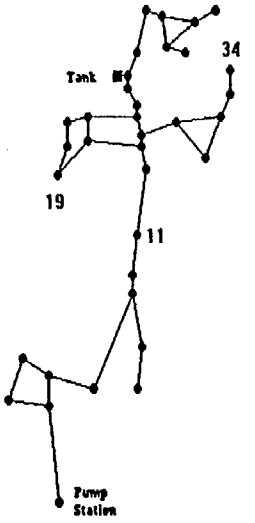

Figure 7.4 Network for Example 2

Figure 7.5 displays the final calibrated input data set for this example, which is contained in the file NET2.INP in your EPANET directory. Note that in the [PATTERNS] section of the input, three time patterns are defined. Pattern 1 pertains to the nodal demand flows (all nodes are assigned to time pattern 1 by default). Pattern 2 is for the flow entering the network from the pump station at Node 1. (The pump station is represented as a junction node with external source flow rather than a true pump.) Pattern 3 defines how the fluoride concentration

level entering Node 1 died off after it was shut off at the treatment plant. Also note that in the [REPORT] section we only ask for output at three nodes (where fluoride samples were collected) and that there is no [REACTION] section because fluoride is a conservative substance.

The NET2.INP data can be run either with EPANET under DOS or under Windows. Three text files have been supplied that contain the observed fluoride values at nodes 11, 19 and 34. They are named NET2-N11.DAT, NET2-N19.DAT, and NET2-N34.DAT, respectively. Each line in the files contains a time value and measured fluoride concentration value. If you run the Windows version of EPANET, you can use its time series graph feature to compare the predicted and observed fluoride values at each of the three sampling locations. (See the instructions on page 82.) As an example, Figure 7.6 shows the results obtained at Node 11.

```
[TITLE]
EPANET Example Network 2

[JUNCTIONS]
;-----------------------------
;      Elev.  Demand   Demand
; ID    ft.    gpm    Pattern
;-----------------------------
  1    50    -694.4     2
  2   100       8
  3    60      14
  4    60       8
  5   100       8
  6   125       5
  7   160       4
  8   110       9
  9   180      14
 10   130       5
 11   185   34.78
 12   210      16
 13   210       2
 14   200       2
 15   190       2
 16   150      20
 17   180      20
 18   100      20
 19   150       5
 20   170      19
 21   150      16
 22   200      10
 23   230       8
 24   190      11
 25   230       6
 27   130       8
 28   110       0
```



```
 29   110       7
 30   130       3
 31   190      17
 32   110      17
 33   180     1.5
 34   190     1.5
 35   110       0
 36   110       1

[TANKS]
;-----------------------------------------
;       Elev.  Init.   Min.   Max.   Diam.
;  ID    ft.   Level  Level  Level    ft.
;-----------------------------------------
   26    235    56.7    50     70     50

[QUALITY]
;-------------------------
; First   Last   Fluoride
; Node    Node     mg/L
;-------------------------
   1       36       1.0
```

Figure 7.5 Input Data for Example 2 (Panel 1 of 3)

```
[SOURCES]
;---------------------------
;        Fluoride   Source
;  ID     mg/L      Pattern
;---------------------------
   1       1.0         3

[PIPES]
;-----------------------------------------------
;       Head      Tail   Length   Diam.   Rough.
;ID     Node      Node     ft.     in.    Coeff.
;-----------------------------------------------
  1       1         2     2400     12      100
  2       2         5      800     12      100
  3       2         3     1300      8      100
  4       3         4     1200      8      100
  5       4         5     1000     12      100
  6       5         6     1200     12      100
  7       6         7     2700     12      100
  8       7         8     1200     12      140
  9       7         9      400     12      100
 10       8        10     1000      8      140
 11       9        11      700     12      100
 12      11        12     1900     12      100
 13      12        13      600     12      100
 14      13        14      400     12      100
 15      14        15      300     12      100
```

16	13	16	1500	8	100
17	15	17	1500	8	100
18	16	17	600	8	100
19	17	18	700	12	100
20	18	32	350	12	100
21	16	19	1400	8	100
22	14	20	1100	12	100
23	20	21	1300	8	100
24	21	22	1300	8	100
25	20	22	1300	8	100
26	24	23	600	12	100
27	15	24	250	12	100
28	23	25	300	12	100
29	25	26	200	12	100
30	25	31	600	12	100
31	31	27	400	8	100
32	27	29	400	8	100
34	29	28	700	8	100
35	22	33	1000	8	100
36	33	34	400	8	100
37	32	19	500	8	100
38	29	35	500	8	100
39	35	30	1000	8	100
40	28	35	700	8	100
41	28	36	300	8	100

Figure 7.5 Panel 2 of 3

```
[PATTERNS]
;Demand pattern
 1   1.26 1.04 .97 .97 .89 1.19 1.28
 1   .67 .67 1.34 2.46 .97 .92 .68
 1   1.43 .61 .31 .78 .37 .67 1.26 1.56
 1   1.19 1.26 .6 1.1 1.03 .73
 1   .88 1.06 .99 1.72 1.12 1.34 1.12
 1   .97 1.04 1.15 .91 .61 .68 .46
 1   .51 .74 1.12 1.34 1.26 .97 .82
 1   1.37 1.03 .81 .88 .81 .81

;Pump flow pattern
 2   .96 .96 .96 .96 .96 .96 .62 0 0 0 0 0 .8 1 1
 2   1 1 .15 0 0 0 0 0 0 .55 .92 .92 .92 .92 .9
 2   .9 .45 0 0 0 0 0 .7 1 1 1 1 .2 0 0
 2   0 0 0 0 .74 .92 .92 .92 .92 .92

;Fluoride source pattern
 3   .98 1.02 1.05 .99 .64 .46 .35 .35
 3   .35 .35 .35 .35 .17 .17 .13 .13 .13 .15
 3   .15 .15 .15 .15 .15 .15 .15 .12 .1 .08
 3   .11 .09 .09 .08 .08 .08 .08 .08 .08
 3   .09 .07 .07 .09 .09 .09 .09 .09 .09
 3   .09 .09 .09 .08 .35 .72 .82 .92 1

[REPORT]
```



```
node  11
node  19
node  34
links none

[TIMES]
DURATION 55

[OPTIONS]
QUALITY Fluoride
MAP     NET2.MAP

[END]
```

Figure 7.5 Panel 3 of 3

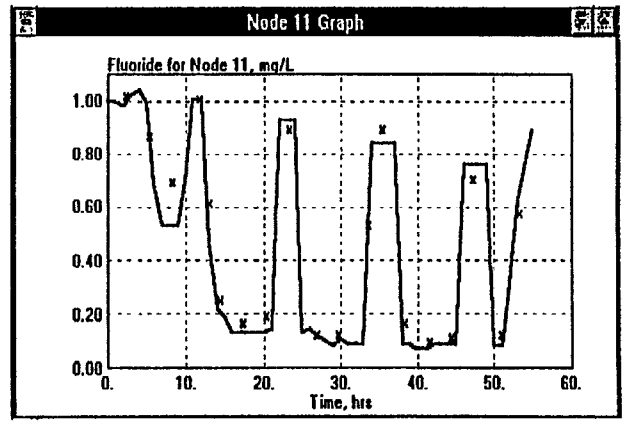

Figure 7.6 Observed (X) and Predicted Fluoride Levels at Node 11 Of Example 2

7.4 Example 3 - Source Tracing

This third example is one that uses EPANET to determine the coverage achieved by one particular raw water source in a two-source distribution system. Figure 7.7 is a map of the network being studied. It represents only a portion of a larger system into which it feeds. There are two raw water sources -- one that is used continuously from high quality river water and another used for a portion of the day that comes from lower quality lake water. In order to design an effective sampling program we would like to determine how far into the distribution system the lake water source penetrates under average water demand conditions.

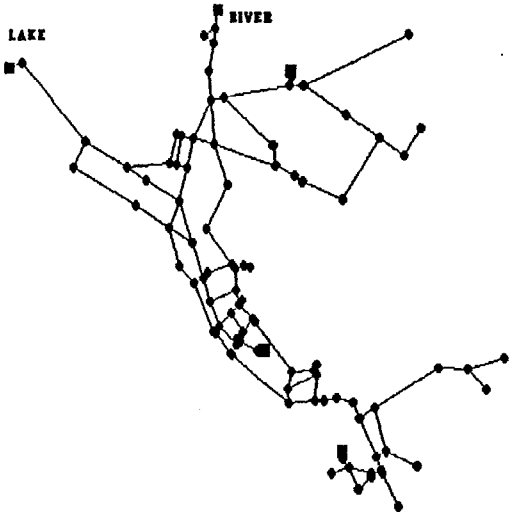

Figure 7.7 Network for Example 3

The input data for this example is contained in the file NET3.INP and because of its size, will not be reproduced here. Some noteworthy features of this data set are:

1. Node 4, the river source, feeds the system continuously through either Pump 335 or Pipe 330. (See Figure 7.8 for a blow-up map of this portion of the system.) The pump is controlled by the water level in Tank 1. When the pump is on, Pipe 330 is valved

off. When the pump is off the pipe is opened. The statements in the [CONTROLS] section that accomplish this are:

```
[CONTROLS]
LINK 335 OPEN IF NODE 1 BELOW 17.1
LINK 335 CLOSED IF NODE 1 ABOVE 19.1
LINK 330 CLOSED IF NODE 1 BELOW 17.1
LINK 330 OPEN IF NODE 1 ABOVE 19.1
```

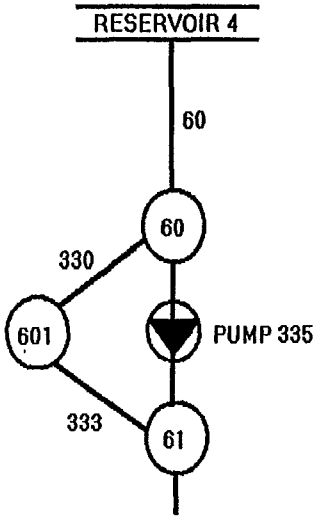

Figure 7.8 Detail of Network Around River Source (Not to Scale)

2. Pump 10, which supplies water from the lake source (Node 5), operates only during hours 1 to 15 of the simulation (9:00 am to 11:00 pm for this example).

3. Connections to other portions of the system not contained in the network occur at Nodes 15, 35, 123, and 203. The baseline demands for these nodes are set to 1.0 and the actual hourly demands appear in time patterns 3, 4, 2, and 5, respectively, as defined in the [PATTERNS] section.

4. The [OPTIONS] section indicates that our water quality simulation will trace the percentage of flow originating from the lake source, Node 5, over a 24-hour period.

5. The [REPORT] section turns off any tabular output for links.

Advisory: If you run this data set as is with EPANET under DOS, the output report produced will run some 57 pages.

Figure 7.9, generated by the EPANET4W program, shows the extent to which lake water propagates through the network after 14 hours of simulation. After this, when the lake water is turned off, its coverage begins to recede. Note that it would be very difficult using the tabular output data from EPANET itself to visualize the spatial reach of the lake water over time.

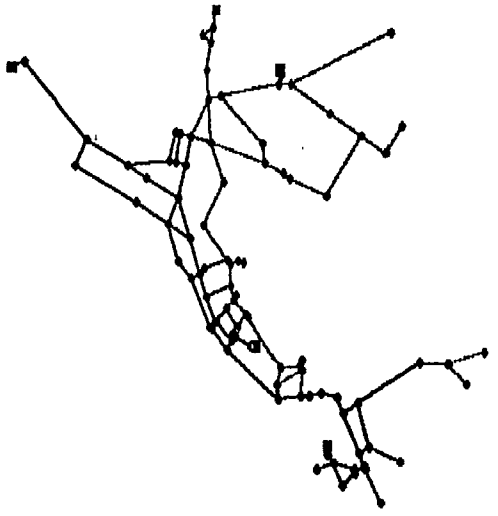

Figure 7.9 Spatial Coverage of Water From Lake Source After 14 Hours

APPENDIX A

FILES INSTALLED BY EPANET

An installation for both Windows and DOS will place the following files in your EPANET directory:

EPANET16.EXE	standard (16-bit) version of the network simulator
EPANET32.EXE	32-bit version of the network simulator
DOS4GW.EXE	DOS extender used with EPANET32.EXE
EPANET4W.EXE	EPANET program for Windows
EPANET.HLP	Windows Help file for EPANET
EPANET.BAT	runs EPANET simulator from DOS
EPANET4D.BAT	menu program for running EPANET from DOS
SOLVER.BAT	runs EPANET simulator from EPANET4W
SOLVER.PIF	Program Information File for SOLVER.BAT
EDITOR.PIF	Program Information File for EPANET4W editor
TEMPLATE	template file for input data
TE.EXE	text editor program
BROWSE.COM	file viewer program
GETDGT.COM	utility program used by EPANET4D.BAT
KYP2EPA.EXE	translates KYPIPE input to EPANET input
NET1.INP	input data for example network 1
NET1.MAP	map coordinates for example network 1
NET2.INP	input data for example network 2
NET2.MAP	map coordinates for example network 2
NET2-N11.DAT	fluoride data from node 11 of network 2
NET2-N19.DAT	fluoride data from node 19 of network 2
NET2-N34.DAT	fluoride data from node 34 of network 2
NET3.INP	input data for example network 3
NET3.MAP	map coordinates for example network 3
README.TXT	latest information about EPANET

In addition, the following dynamic link library files will be installed in your Windows \SYSTEM directory unless a more recent version already exists:

COMMDLG.DLL
VBRUN200.DLL

VER.DLL
CMDIALOG.VBX
GRID.VBX
TEXTVIEW.VBX

(If you are are running a shared version of Windows over a network, then these files will be placed in your local Windows directory.)

An installation for DOS only will copy the following files to your EPANET directory:

EPANET16.EXE	EPANET32.EXE
DOS4GW.EXE	EPANET.BAT
EPANET4D.BAT	TEMPLATE
TE.EXE	BROWSE.COM
GETDGT.COM	KYP2EPA.EXE
NET1.INP	NET1.MAP
NET2.INP	NET2.MAP
NET2-N11.DAT	NET2-N19.DAT
NET2-N34.DAT	NET3.INP
NET3.MAP	README.TXT

APPENDIX B

ERROR AND WARNING MESSAGES

Error Number	Description
10	Error in trying to open a temporary scratch file used by EPANET to save hydraulics results. May be caused by disk being full.
11	Error in trying to open the file containing hydraulics results from a previous run. Most likely caused by an incorrect file name used in the HYDRAULICS USED line of the [OPTIONS] section in the input data file.
12	The hydraulics file specified in the [OPTIONS] section of the input data does not appear to match the network described in the input.
13	Cannot read data from the hydraulics file. Most likely caused by specifying a file that does not contain hydraulics data.
14	Cannot write results to the output report file. Could be due to an illegal file name or the disk being full.
15	Error in trying to open the network verification file. Most likely caused by an incorrect file name in the VERIFICATION line of the [OPTIONS] section of the input file.

Error Number	Description
101	Not enough memory to store network data.
102	Not enough memory for hydraulic analysis.

103	Not enough memory for water quality analysis.
104	Not enough memory to write the output report.
200	One or more errors were detected in the input file.
201	Format error in input line.
202	Node defined in input line was previously defined.
203	Link defined in input line was previously defined.
204	Input line refers to an undefined node.
205	Input line refers to an undefined link.
206	Incorrect pump curve data (e.g., the pump curve is not concave or does not have decreasing head with increasing flow).
207	Input line refers to an undefined time pattern index.
208	Input line contains an illegal numerical value.
209	Input line contains illegal pipe data (e.g., values less than or equal to zero).
210	Tank levels are mis-specified (e.g., a minimum level was greater than the maximum level).
211	There are no tanks or reservoirs in the network.
212	One end of a control valve is a tank or reservoir.

Error Number	Description
213	An unconnected node was detected. The node ID is displayed.
214	The verification file indicates a different set of links connecting to a node than are found in the input file.
215	There are not enough nodes in the network.

216	An illegal status was set for a check valve (e.g., OPEN or CLOSED).
217	The reporting start time is greater than the simulation duration.
218	The input line contains more than 80 characters.
300	The network hydraulic equations become ill-conditioned and cannot be solved. The program indicates which node is causing the problem and prints a status table for the network at this point in time.
400	The water quality transport equations could not be solved.

Warning Message	Suggested Action
Pump cannot deliver head.	Use a pump with a larger shutoff head.
Pump cannot deliver flow.	Use a pump with a larger flow capacity.
Flow control valve cannot deliver flow.	Reduce the flow setting on the valve or provide additional head at the valve.
System unbalanced[1].	Use the STATUS FULL command in the [REPORT] section of the input to identify any links whose status keeps switching back and forth between iterations of the network hydraulic equations.

[1]Situations that produce this condition might include inconsistent pressure control levels and closed-off tanks or links that isolate a portion of the network from any source. Computational results produced from an unbalanced network are not physically meaningful. If the condition persists over several time periods, it could result in an ill-conditioned set of hydraulic equations that cannot be solved.

APPENDIX C

THE KYP2EPA CONVERSION PROGRAM[2]

KYP2EPA is a program that takes a Kentucky Pipes (KYPIPE) input data set and converts it into an EPANET input data set. The KYPIPE data set is assumed to adhere to the format specified in the KYPIPE User's Manual[3]. KYP2EPA is run from the DOS prompt with the following command:

KYP2EPA kypfile epafile

where ***kypfile*** is the name of an existing KYPIPE file and ***epafile*** is the name of the EPANET file to be produced.

KYP2EPA supports all of the KYPIPE modeling features except it ignores pipe parameter changes and external inflows to tanks (Cards 4a-C, 4b-C and 5-C). Each pipe in the KYPIPE file that contains a pump or valve is converted into two links in the EPANET file; a new pump or valve link at the head end of the pipe (including a new end node) followed by the original pipe. The program also assigns node numbers to all tanks and reservoirs in the KYPIPE file. These modifications are summarized by comment lines placed at the head of the EPANET file.

An EPANET verification file will be generated if the geometric verification option is included in the KYPIPE file. The verification file has the same prefix as the EPANET input file and a .VER extension. Newly created nodes and nodes connected to newly created links will not be included in the file. This will cause EPANET to issue a warning message when it is run unless these data are edited into the .VER file by the user.

[2]This program was co-authored by Dr. Paul F. Boulos of the Computer Aided Engineering Department of Montgomery Watson, Pasadena, California. Its development was partially supported by the American Water Works Association Research Foundation under Project #815, "Characterization and Modeling of Chlorine Decay in Distribution Systems".

[3]Wood, D.J. "Computer Analysis of Flow in Pipe Networks Including Extended Period Simulations", University of Kentucky, Lexington, KY, 1980 (1986 edition).

APPENDIX D

TROUBLESHOOTING

EPANET fails to install correctly under Windows.

Try one or more of the following:

1. Shut down all other Windows applications that may be running (such as the Clock) and launch the setup program again from Program Manager.

2. Exit from Windows, change directories to the Windows directory (typically c:\windows), and repeat the installation procedure.

3. If using Windows for Workgroups, exit from Windows, re-start Windows in Standard mode, and repeat the installation procedure.

When running under Windows, a message appears saying that the Editor or the Simulator cannot be found.

Make sure that the files EDITOR.PIF and SOLVER.PIF reside in your EPANET directory. If you have replaced the default editor that comes with EPANET, then make sure that you have modified the EDITOR.PIF file correctly (if using a DOS editor) or have modified the EPANET.INI file correctly (if using a Windows editor). See Section 3.4 for instructions on modifying these files.

The EPANET simulator returns with one of the Not Enough Memory error messages.

Try one or more of the following:

1. Use the 32-bit version of the simulator if you have an 80386 or higher CPU with extended memory on your PC. See Section 3.4 for instructions on how to run EPANET in 32-bit mode.

2. If the error message occurs when running under Windows, try running the same input file under the DOS version of EPANET. By adding a third file name to command line that launches EPANET under DOS, you can view the results of the run at a later time under Windows. After starting up EPANET for Windows again, select that file to load under the Open Output option of the File menu.

3. If the error message refers to a water quality analysis (error number 103), then make sure that your QUALITY TIMESTEP parameter in the [OPTIONS] section of the input file is not too small and that your SEGMENTS parameter is not too large.

An EPANET run produces a System Unbalanced warning message.

This condition typically occurs when a pump or valve keeps switching its status back and forth between successive iterations of solving the hydraulic equations for the network thus causing the system to fail to converge to a solution. Possible causes for this are a pair of pressure controls that turn a pump on and off whose pressure settings are too close together, or a collection of pressure regulating valves whose pressure settings influence the status of one another. You can specify the STATUS FULL option in the [REPORT] section of the input to identify those links that might be behaving in this manner and then modify their pressure settings to avoid this situation. Another option would be to use a slightly larger value for the ACCURACY parameter in the [OPTIONS] section of the input and see if this solves the problem.

An EPANET run produces obviously incorrect results (e.g., large negative pressures) or stops running with Error Message 300 (Cannot Solve Network Hydraulic Equations).

First check your input data to make sure that:

1. all parameters are in their correct units (e.g., inches (or millimeters) for link diameters, millifeet (or millimeters) for Darcy-Weisbach roughness coefficients, psi (or meters) for valve pressure settings),

2. parameters are entered in the right order (e.g., pipe length precedes pipe diameter, the node ID on the suction side precedes the node ID on the discharge side for pumps),

3. tank levels are specified as height above the elevation of the tank bottom (and not as total elevation).

Then check your output for the following conditions that will cause a portion of the network to become isolated from any source of supply:

1. pumps that are shut down because they cannot deliver the required head (try using a pump with a larger shutoff head),

2. valves that close to prevent reverse flow (either modify the pressure setting for the valve or provide more head on its upstream side),

3. tanks that reach their minimum water level (either reduce the minimum level or have supply pumps online before this condition is reached).

Note that it is possible for several of these conditions to exist at the same time.

Installing EPANET

EPANET is usually provided in a zipped or compressed format. This makes it easier to tranport by floppy disk and to transmit over phone lines. To install EPANET, you need to unzip or expand out the files and run the setup program. A typical set of instructions, assuming you are installing to drive C: is given below.

Boot the computer. At the C:> prompt, type

md epatemp↵

Where ↵ indicates pressing the Return key. Place the floppy containing EPANET.ZIP and UNZIP.EXE or PKUNZIP.EXE in drive A:, then copy these files to C; by typing

copy a:*.* c:\epatemp↵

Move to the epatemp directory and expand the files by typing

cd epatemp↵

unzip epanet.zip↵

Note that if you were provided pkunzip.exe instead of unzip.exe, you should instead type

cd epatemp↵

pkunzip epanet.zip↵

The unzip program will expand EPANET.ZIP out into a large number of files.

At this point, you are ready to run Windows. Type

win↵

Finally, you need to run the SETUP.EXE program located in the epatemp directory to install EPANET. Go to the File menu in windows and select Run. For the program name type c:\epatemp\setup.exe. (Note that there is a setup4d.xe program as well. This is for installing the DOS version of EPANET, which is not as powerful.)

The setup program should start. It will ask for a directory to install EPANET. The default is C:\EPANET. This is usually acceptable, although you can change it if necessary. Type the Return key, and after a few minutes the EPANET icon will appear. This indicates that EPANET is successfully installed.

The editor that is provided with EPANET is antiquated and hard to use. The EPANET manual provides instructions for changing the default editor. Make sure that the editor is capable of working with large files (>64k). This limitation generally excludes NOTEPAD.EXE, which is supplied with Windows. There are a number of suitable shareware editors available. including NOTEBOOK.EXE.

Water Distribution System Seminar

by

Daniel Gallagher

and

Fred Zobrist

Sponsored by

USAID and UNDP

May 14-15, 1996

Table of Contents

87

I. Hydraulic equations

I. Bernoulli's Energy Equation

Water flow in pipes may have 3 types of energy or head: velocity, pressure, and potential or elevation. The general energy equation for incompressible water flow between any two points in a system is given by Bernoullli's equation

$$\frac{p_1}{\gamma}+\frac{V_1^2}{2g}+z_1=\frac{p_2}{\gamma}+\frac{V_2^2}{2g}+z_2+h_L$$

where p = pressure, γ = specific weight, g = gravity, V = velocity, z = elevation above some datum, and h_L = headloss due to friction. Pumps may be used to add energy to the system. There are various methods used to estimate the friction headloss in a pipe. Three are described below: Hazen Williams, Manning, and Darcy Weisbach.

II. Hazen Williams

The Hazen Williams equation is an empirical relationship commonly used for pipes flowing full in pressurized systems. Thus it is the most common formula for the design of water distribution networks.

The SI version of the Hazen Williams formula is

$$V = 0.849CR^{0.63}S^{0.54}$$

where V = velocity in m/s, C = coefficient, function of pipe material and age, R = hydraulic radius (flow area divided by wetted perimeter) in m, and S = slope of energy grade line (headloss per length, h_L/L, if due to pipe friction). Note that if different units are used, the factor 0.849 will change accordingly.

For circular pipes flowing full, the hydraulic radius = pipe diameter/4, and the Hazen Williams equation can be rewritten in terms of flow

$$Q = 278CD^{2.63}S^{0.54}$$

where Q is pipe flow in L/s and D is pipe diameter in m.

The Hazen William's C factor decreases as roughness increases. Typical values for the Hazen Williams coefficients are

Pipe Material	Hazen William's C
new cast iron	130
5 yr old cast iron	120
20 yr old cast iron	100
average concrete	130
new welded steel	120
asbestos cement	140

III. Manning

More commonly used for open channel flow such as sewers, although some engineers also use it pressurized systems. The SI units Manning equation is

$$V = \frac{1}{n} R^{2/3} S^{1/2}$$

where V = velocity in m/s, n = coefficient of roughness, R = hydraulic radius in m, and S = slope of energy grade line.

For circular pipes flowing full, the hydraulic radius = pipe diameter/4, and the Manning equation can be rewritten in terms of flow

$$Q = \frac{312}{n} D^{8/3} S^{1/2}$$

where Q is pipe flow in L/s and D is pipe diameter in m.

Manning's n increase as roughness increases. Typical values are given below.

Material	Manning n
concrete	0.013
cast-iron pipe	0.015
vitrified clay	0.014
brick	0.016
corrugated metal pipe	0.022
bituminous concrete	0.015
uniform firm sodded earth	0.025

IV. Darcy-Weisbach

More fundamental than the other equations. Friction factor varies with turbulent/laminar flow condition.

$$h_L = f \frac{LV^2}{2Dg}$$

where h_L = head loss, L = pipe length, D = pipe diameter, f = friction factor, V = velocity. the friction factor f is a function of relative roughness of pipe (pipe material and age) and Reynolds number. It is usually determined from a Moody diagram.

The Darcy Weisbach formula can be rearranged to yield

$$v = \left(\frac{2gDS}{f} \right)^{1/2}$$

Notice that for a given pipe, all of these equations have the form

$$h_L = K Q^a$$

where K = a coefficient for a given pipe and depends upon its length, diameter, age, material, etc. K is a constant for the Hazen Williams and Manning equations but varies with Q (through the Reynolds number) for the Darcy Weisbach

a = constant exponent that depends on the formula used

91

V. Minor losses

Minor losses for turbulent flow conditions are generally expressed as a function of $V^2/2g$ the velocity head. For long pipes, pipe friction headloss usually predominates and minor losses can be neglected. For shorter pipes such as those in treatment plant, minor losses can be important.

ب. Pumps

Capacity of a pump is expressed as flow delivered. The head required to overcome losses in a pipe system is termed system head. The total dynamic head is the head against which the pump must work when water is being pumped. This is the head added to the system by the pump and can be calculated as the difference in head using Bernoulli's equation between the discharge and suction nozzle of the pump.

The power input for a pump is a function of the flow, head, and efficiency of the pump. Typical efficiencies range from 60-90%.

$$E_p = \frac{pump\ output}{power} = \frac{\gamma\ QH_t}{P}$$

I. Pump head - capacity curve

The head that a constant speed pump can produce as flow changes called pump head - capacity curve or pump characteristic curve. The system curve is the plot of the total dynamic head(sum of the static lift + kinetic energy losses).

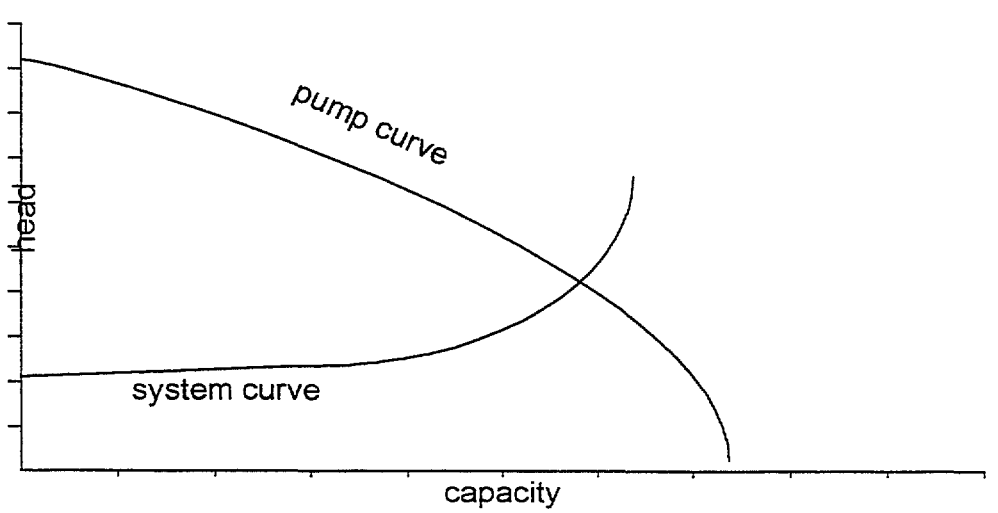

The operating point for the pump is defined by the intersection of the pump head curve and the system curve.

ت. Valves

I. check

Check valves permit flow in only one direction. Commonly used to prevent flow reversal of flow when pumps are shit off. Check valves, termed foot valves, can be installed on the suction side of pump to prevent loss of prime. Check valves are installed on the discharge side of pump to reduce hammer force.

II. pressure reducing

Pressure reducing valves maintain a set pressure on the downstream end. Operate by using the upstream pressure to throttle the flow through an opening similar to globe valve. The throttling valve will open or close until the downstream pressure reaches the preset value.

III. pressure sustaining

Pressure sustaining valves attempt to maintain a minimum pressure on the upstream end when the downstream pressure is below that value. If the downstream pressure is above the setting, flow is unrestricted. If the downstream pressure is above the upstream pressure, valve will close to prevent reverse flow.

IV. pressure breaker valves

Pressure breaker valves for a specified pressure loss across the valve.

V. flow control valves

Flow control valves to limit the flow through a valve to set amount, providing sufficient head is available.

VI. throttle control valves

Throttle control valves simulate a partially closed valve by adjusting the minor loss coefficient of the valve.

VII. gate valves

Most commonly used for on-off service. Relatively inexpensive and offer positive shutoff. Located throughout a distribution system at regular intervals so that breaks in the system can be isolated. Valves should be accessible through manhole of valve box. Generally must be installed in vertical position. Large gate valves frequently include small bypass valve to equalize pressure on the main valve and reduce potential for water hammer.

VIII. butterfly valves

Less expensive and easier to operate than gate valves. Not suitable for liquids that contain solids and light prevent complete closure.

IX. air vacuum and air relief valves

Used in long pipes at high points to prevent negative pressure from building up if lines are drained or to allow accumulated air to be released. Operate automatically.

X. *Altitude-control valves*

A type of diaphragm-valve used to control level of water in a tank supplied from a pressure system. Two types are used: single acting and double acting. Single acting used only for filling the tanks. The tank discharges through a separate lined or through a check valve in a bypass line around the altitude valve. A double acting altitude valve allows water to flow both to and from the tank. When the tank becomes full, the valve closes to prevent overflow. When the distribution pressure drops below the pressure exerted by the full tank, the valve opens to discharge water to the distribution system.

XI. *globe and angle valves*

Not commonly used in water distribution system. Primary application is household plumbing.

ث. Storage

Storage is provided to equalize supply and demand, level out pumping requirements, provide water during source or pump failure, provide water to meet fire demands, provide surge relief, and to blend water sources. With adequate storage, water can be treated and pumped from the treatment plant to the distribution system at a rate equaling the maximum day demand and pumps can be operated at their rated capacity. Storage can also be used if the treatment plant operates for only a portion of a day.

I. *Types of water storage facilities*

1. types of service

i) operating storage

Operating storage generally floats on the system with the reservoir filling when demand is low and emptying when demand exceeds supply. A mass balance can be used to size the operating storage.

Given the following demand rates, find the required operational						
storage assuming 24 hr pumping.						
Time Interval		Demand	Hourly	Hourly	Supply - Demand	
start	end	Rate	Demand	Supply	to	from
		gpm	gal	gal	storage	storage
12:00 AM	1:00 AM	1900	114000	280460	166460	0
1:00 AM	2:00 AM	1800	108000	280460	172460	0
2:00 AM	3:00 AM	1795	107700	280460	172760	0
3:00 AM	4:00 AM	1700	102000	280460	178460	0
4:00 AM	5:00 AM	1800	108000	280460	172460	0
5:00 AM	6:00 AM	1910	114600	280460	165860	0
6:00 AM	7:00 AM	3200	192000	280460	88460	0
7:00 AM	8:00 AM	5000	300000	280460	0	-19540
8:00 AM	9:00 AM	5650	339000	280460	0	-58540
9:00 AM	10:00 AM	6000	360000	280460	0	-79540
10:00 AM	11:00 AM	6210	372600	280460	0	-92140
11:00 AM	12:00 PM	6300	378000	280460	0	-97540
12:00 PM	1:00 PM	6500	390000	280460	0	-109540
1:00 PM	2:00 PM	6460	387600	280460	0	-107140
2:00 PM	3:00 PM	6430	385800	280460	0	-105340
3:00 PM	4:00 PM	6500	390000	280460	0	-109540
4:00 PM	5:00 PM	6700	402000	280460	0	-121540
5:00 PM	6:00 PM	7119	427140	280460	0	-146680
6:00 PM	7:00 PM	9000	540000	280460	0	-259540
7:00 PM	8:00 PM	8690	521400	280460	0	-240940
8:00 PM	9:00 PM	5220	313200	280460	0	-32740
9:00 PM	10:00 PM	2200	132000	280460	148460	0
10:00 PM	11:00 PM	2100	126000	280460	154460	0
11:00 PM	12:00 AM	2000	120000	280460	160460	0
		Sum:	6731040	6731040	1580300	-1580300
Average hourly pumping:			6,731,040 / 24 =		280460	
Required storage:			1580300			

ii) emergency storage

Designed to be used only in exceptional situations such as fires or source failures.

2. configuration

i) tanks

Generally refers to any structure used for containing water. Elevated tanks are supported on steel or concrete tower. Ground level tanks are less expensive to build and operate, but may require a booster pump to provide adequate pressure.

ii) standpipes

Tank resting on the ground with a height greater than its diameter. Generally only the upper portion has enough pressure to be used in the distribution system. The lower portion can be used for emergency storage.

iii) reservoirs

Reservoirs generally refers to very large storage facilities. Can be ponds, lakes, etc. More common to use reservoirs for raw water storage rather than treated water.

iv) pneumatic tanks

Used in very high or remote areas with few customers. Consists of steel pressure tank partially filled with pressurized air. The compressed air on top of the water provides necessary pressure to the area. A small booster pump is located on the intake side of the tank. The pump is only turned on when the pressure in the tank drops below a set level. The maximum amount of water that may be withdrawn at any time is approximately 1/3 the total tank volume.

3. Construction material

Tanks can be made from steel or concrete with an appropriate liner.

4. Location

To minimize pipe diameters, elevated storage facilities are usually located in regions of the service areas where pressure is low, i.e. as close to the center of demand as reasonable. The water level in the reservoir must be at a sufficient elevation to permit gravity flow at an adequate pressure. Reduced pipe diameters can be used near a reservoir because the water will flow in all directions away from the tank when it is supply water. Elevated storage facilities near the treatment plant generally do not allow for reduced pipe diameters. Decentralized storage with several smaller tanks in different parts of the distribution system are usually preferred compared to one large tank.

Ground-level storage with booster pumps is often used when the system has several pressure zones. Storage is located at the boundaries of these pressure zones. Water from the lower pressure zone flows into the reservoir and is pumped to the higher pressure zone.

II. "Floating" storage tanks

During periods of low flow, usually in late evening, the heads in the distribution system are low and the storage tank is filled automatically. Altitude control valves can be used to shut off flow when the storage tank is full. As the demand increases during the day, the head in the distribution system falls and the entire capacity of the treatment pumps is used to meet demands. As demand increases further, the excess demand is met from the storage tank and the tank begins to empty.

ج. Hydraulic modeling

Pressures (heads) should be adequate for consumers and fire fighting. This influences the diameters chosen. If help is needed to maintain pressure, in-line booster pumps and elevated storage tanks can be used. Typical pressures in residential areas of the US range from 40 to 50 psig (90 to 115 feet of head). Pipe sizes should be large enough to avoid excessively high or low velocities. Generally 3 to 4 feet per second is considered desirable. The National Board of Fire

Underwriters requires a minimum of 8 in diameter pipe, although 6 inch diameter pipe can be used in the grid system.

Hydraulic models for distribution systems should be analyzed for conditions that exist now as well as for conditions that exist at the end of the design period. Headlosses are expected to increase as pipes age.

I. Notation and data requirements

Distribution systems are generally based on a link-node framework. Links are use to represent the pipes. Nodes represent locations where flows enter or leave the system or where links join together. Nodes should be placed wherever pipe characteristics (e.g. diameter or material) change or to provide sufficient resolution for water demands. Demands are typically not modeled at the level of individual households - rather a group of households are clumped together and the demands are located at one common point.

1. Water System Inventory

i) inventory existing facilities

(1) pipe location and diameter, length, type, age, present condition

(2) storage facilities: capacity, location, availability, dimensions, water surface elevations, connections to system

(3) design and operation features of service and booster pumps, including capacity, system head, elevation

(4) control and regulatory valves elevation, operation, pressure setting, purpose

(5) service areas and pressure zone boundaries

ii) review operating records and interview staff

(1) diurnal and seasonal treated water production records

(2) service and booster pump flows and pressures

(3) clearwell and storage level variations for different demand situations

(4) system operation criteria for pump stations, storage, source pumps

97

(5) system operating pressures determined from past testing or monitoring

(6) power consumption records, costs, and rate structure

(7) observed low pressure areas indicating system deficiencies

(8) observed fire flow capabilities

iii) ***review water consumption records***

(1) total water sales (billing records)

(2) service population

(3) number and types of connections

(4) consumption by major users

(5) peaking factors

(6) system diurnal demand curves

iv) ***develop water demands using consumption records and population and land use projections. Existing and projected demands should be established for the total system, sub areas within the system, and major users.***

(1) average annual day demands

(2) maximum day demands

(3) peak hour demands

(4) fire flow demands

(5) minimum hour demands or maximum storage - replenishment rate

(6) other site specific demand features

98

v) *establish background information for power management and operational improvement programs*

(1) plot pump characteristic curves vs system head curves

(2) establish average maximum day pumping rate from the developed diurnal demand curve

(3) determine whether system storage or auxiliary power can be used to reduce peak pumping rate to or below the average of the maximum day demand.

(4) check the piping arrangements to storage complexes for replenishment constraints

(5) examine pump curves vs system head curve conditions to determine optimal operation sequence based on system demands

2. Required physical data

i) *pipe segments*

(1) assign ID numbers

(2) establish length between nodes

(3) determine pipe diameter, roughness coefficient (age and pipe material)

ii) *nodes*

(1) assign ID numbers

(2) establish ground surface elevations of each node

If read from contour map, 1 m contours desirable, 3 m contours acceptable if no other data. Errors arise from interpolated contours. (Note 1 ft error = 0.43 psi.) Generally, ground surface elevations are used, not the elevations of the buried pipe.

Accurate data needed for pressure control points - points where system pressure fixed or open to atmosphere - and pressure regulated discharge points. Other node elevations can be estimated.

iii) *supply pumps and booster pumps*

(1) assign ID numbers (EPANET treats as links, other programs as nodes)

(2) determine multiple points on pump curve

(3) define on/off control levels based on system pressure or tank elevations)

(4) determine ground surface elevation for each pump

(5) assign valve or adjust pump curve for minor losses

iv) *control valves and pressure regulating valves*

(1) assign ID number (EPANET treats as links, other programs as nodes)

(2) determine downstream pressure setting for each PRV

(3) determine control pressures for flow control valves

(4) establish ground surface elevations

v) *reservoirs and storage facilities*

(1) assign ID number (treated as nodes)

(2) define capacity, dimensions, flow rate, and operating range

(3) establish ground surface and water surface elevations

II. Branched distribution systems

There are 2 general classes of piped distribution systems: branched and looped. A branched network contains no closed circuits or loops. Pipes can simply dead end. Branched networks are found on the outskirts of many towns, in rural communities, in irrigation systems, and frequently in villages in developing countries. Branched distribution systems have a structure similar to a tree. A trunk line provide the major source of water. Service mains and submains branch off the trunk line. Branched distribution systems have several limitations: stagnation in the dead ends may allow for bacterial growths and sedimentation, disinfectant residuals are hard to maintain in the dead ends, repairs will shut down service for all connections beyond the repair point, the pressure at the end of the line may become undesirable low as additional corrections are made.

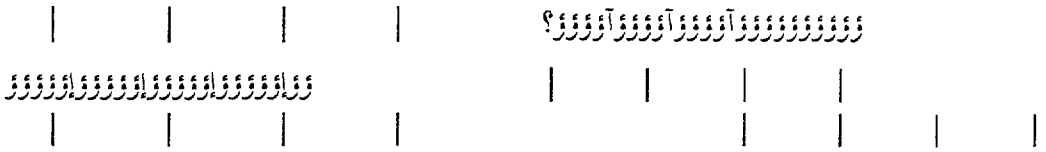

(a) (b)

Examples of branched distribution systems

On the other hand, branched distributions are simple to design and construct, and are less costly than looped systems. When branched networks are used, the cost of the network is often of major concern. Branched networks use less pipe than looped networks, and therefore cost significantly less. An interesting problem is to design a branched distribution network that has minimum cost for a specified layout. Once the layout is established, the major factors affecting cost are the diameters used throughout. These must be chosen to maintain necessary heads at each point in the distribution system. This problem requires an understanding of both fluid flow in pipes and optimization techniques. As stated, the problem can be formulated as a linear programming problem. A linear program optimizes a linear objective function that is subject to a series of linear equality and inequality constraints. The problem will be illustrated through the use of an example. Given the example network below

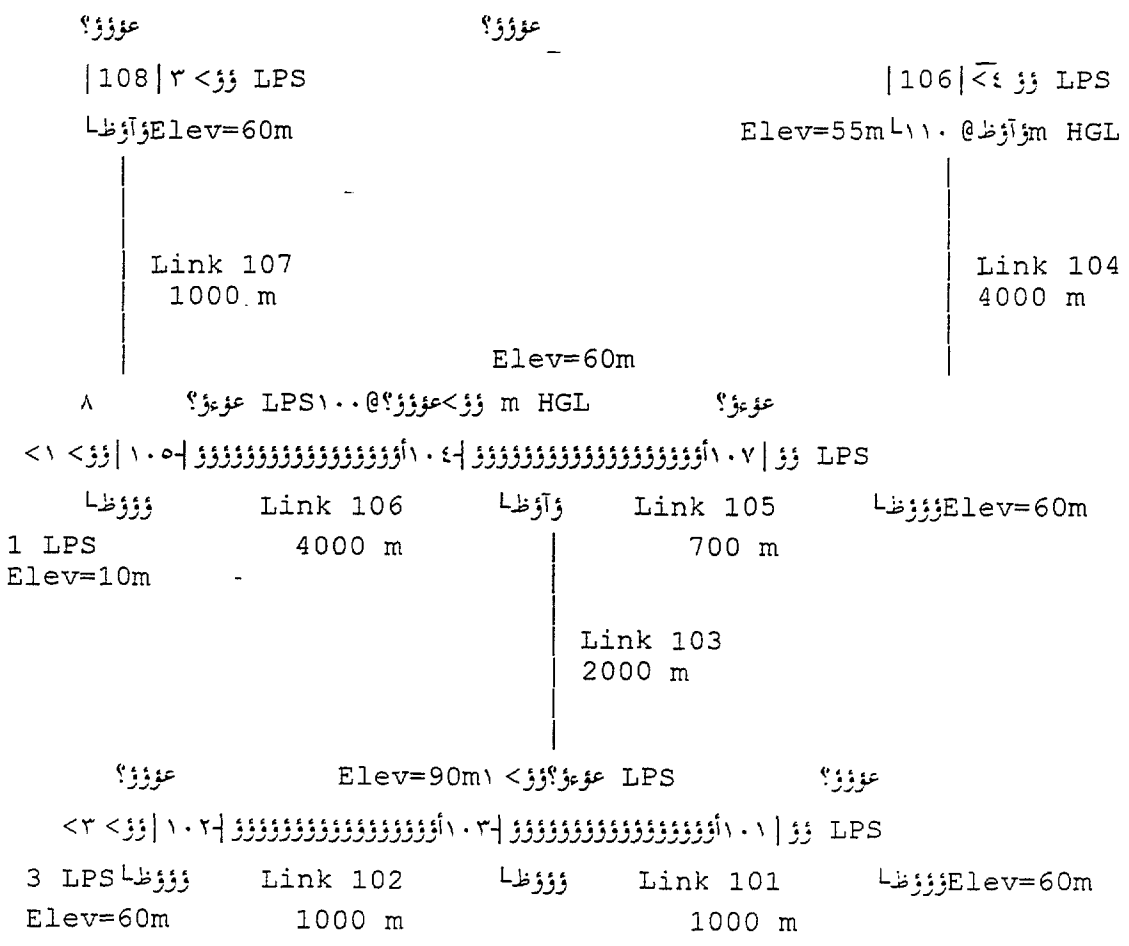

The example network consists of 7 pipe segments or links which are connected by 8 nodes. Each node is a point of water input or demand or a junction between two pipes. The network contains no closed loops, hence it is a branched network and the link flows may be easily determined from the mass balance equations alone. Inputs to the network occur at nodes 104 and 106. These inputs have known hydraulic grade line elevations. All other nodes are either demand or junction nodes. Two links, 105 and 106, are existing, with 10 cm diameters. It is assumed that link 105 will remain unchanged, while link 106 will be paralleled with new pipe if necessary. All other links will be designed using new pipe.

The design objective is to select pipes for the links in such a manner that the total construction cost is minimized subject to certain design constraints. Both the objective and the constraints can be written as linear equations or inequalities. The resulting problem is called a linear program. The mathematical trick that permits the formulation of the problem as a linear program is that pipe length, rather than pipe diameter, is treated as the unknown or decision variable. Thus, the engineer proposes commercially available pipe diameters as candidates for each link, and the linear programming algorithm selects from these candidates the optimal combination. Different sets of pipe diameters for different links are allowed. The optimal combination of pipes for each link would then be laid in series along the link.

The candidate pipe diameters for the example network are 5 cm, 10 cm, and 20 cm. The decision variables are:

x_1 = the length of 5 cm pipe to be used in link 101
x_2 = the length of 10 cm pipe to be used in link 101
x_3 = the length of 20 cm pipe to be used in link 101
x_4 = the length of 5 cm pipe to be used in link 102
x_5 = the length of 10 cm pipe to be used in link 102
x_6 = the length of 20 cm pipe to be used in link 102
x_7 = the length of 5 cm pipe to be used in link 103
x_8 = the length of 10 cm pipe to be used in link 103
x_9 = the length of 20 cm pipe to be used in link 103
x_{10} = the length of 5 cm pipe to be used in link 104
x_{11} = the length of 10 cm pipe to be used in link 104
x_{12} = the length of 20 cm pipe to be used in link 104
x_{13} = the length of 10 cm pipe to be used in link 105
x_{14} = the length of 10.8 cm pipe to be used in link 106*
x_{15} = the length of 14 cm pipe to be used in link 106*
x_{16} = the length of 23.7 cm pipe to be used in link 106*
x_{17} = the length of 5 cm pipe to be used in link 107
x_{18} = the length of 10 cm pipe to be used in link 107
x_{19} = the length of 20 cm pipe to be used in link 107

* These are equivalent diameter pipes. x_{14} is the equivalent diameter of the existing 10 cm and the candidate 5 cm. Similarly, x_{15} is the equivalent of the existing 10 cm and the candidate 10 cm, and x_{16} is the equivalent of the existing 10 cm and the candidate 20 cm.

The installed costs per unit length of the candidate pipe are \$15/m for the 5 cm pipe, \$50/m for the 10 cm pipe, and \$100/m for the 20 cm pipe. Installed pipe has an associated cost of \$0/m, regardless of its diameter. The construction cost is thus

102

$$
\begin{aligned}
COST = {} & 15\,x_1 + 50\,x_2 + 100\,x_3 + 15\,x_4 + 50\,x_5 + 100\,x_6 + \\
& 15\,x_7 + 50\,x_8 + 100\,x_9 + 15\,x_{10} + 50\,x_{11} + 100\,x_{12} + \\
& 0\,x_{13} + 15\,x_{14} + 50\,x_{15} + 100\,x_{16} + 15\,x_{17} + \\
& 50\,x_{18} + 100\,x_{19}
\end{aligned}
$$

The constraints on the design variables consist of both equalities and inequalities. These constraints impose both headloss and length restrictions on the decision variables. There are 3 type of headloss constraints that may be imposed at each node. The first type says that the residual head at the node must be greater than or equal to some specified head. This is used to insure that there is minimum positive pressure at the specified nodes. An alternative constraint is that the residual head must be less than or equal to some specified head. This type of constraint are used in hilly terrains to prevent exceeding the allowable pipe pressure or to prevent excessive pressures at nodes. The final type of constraint is that the residual head is equal to some known head. This constraint is used in networks with more than one input node to insure that the headloss along the path from the two nodes is equal to the difference in the hydraulic grade lines (HGL). Paths are referenced from a specified input node called the reference node. This last type of constraint must be imposed where more than one input occurs. The other constraints may be imposed as needed. In general, minimum pressure constraints are imposed at the extremities of the network, i.e. the terminal or end nodes. Maximum pressure constraints are imposed at low elevation points on hilly terrain. The linear programming technique automatically adds constraints that all the decision variable be nonnegative. Since theses variable represent lengths in this problem, these additional constraints are not a difficulty. If the minimum allowable head is 1 meter, and this constraint is to be applied to nodes 101, 102, 103, and 108, and node 104 is taken as the reference node, the constraints can be written as

$$
\begin{aligned}
hL_{103} + hL_{102} &<= 100 - 60 - 1 = 39 \\
hL_{103} &<= 100 - 90 - 1 = 9 \\
hL_{103} + hL_{101} &<= 100 - 60 - 1 = 39 \\
hL_{106} + hL_{107} &<= 100 - 60 - 1 = 39
\end{aligned}
$$

where the subscripts on the headloss refer to the links, 100 is taken from the HGL of the reference node, 60 and 90 are the ground elevations of the constrained nodes, and 1 is the minimum residual head.

If the head at node 107 is constrained not to exceed 55 m, then its constraint can be written as

$$hL_{106} >= 100 - 10 - 55 = 35$$

Since there are two input nodes, with fixed HGL's, an additional constrain must be written

$$hL_{105} + hL_{104} = 100 - 110 = -10$$

Nodes 104 and 105, as interior nodes, probably do not need to be constrained on the first design. If the initial results suggest that constraints are necessary, they may be added and second design performed.

The headlosses are calculated for each of the candidate pipes using one of the flow equations, typically the Hazen Williams equation. The headloss can be calculated from

103

$$h_{Lij} = (Q_i/k_iC_i)^{1.85} D_j^{-4.87} L_j$$

where h_{Lij} = headloss in pipe j in link i

Q_i = flow in link i

k_i = constant for link i that depends on units

C_i = Hazen Williams coefficient in link i

D_j = diameter of pipe j

For example, in link 101, three different diameter pipes may be used to make the link.

Additional constraints must be added to insure that the lengths of the candidate diameters match the needed total length of each pipe. These constraints are

$$x_1 + x_2 + x_3 = 1000$$
$$x_4 + x_5 + x_6 = 1000$$
$$x_7 + x_8 + x_9 = 2000$$
$$x_{10} + x_{11} + x_{12} = 4000$$
$$x_{13} = 700$$
$$x_{14} + x_{15} + x_{16} = 4000$$
$$x_{17} + x_{18} + x_{19} = 1000$$

The linear programming automatically adds the constraints that

$$x_i >= 0 \qquad i = 1,\ldots,19$$

The problem, then, is to choose the xi's that minimize the cost, but meet all of the constraints. A computer program, BRANCH, that sets up and solves this type of problem is included along with user instructions. The basic solution from the linear programming algorithm is

Link #	Diameter (cm)	Length (m)
101	5	129.6
	10	870.4
102	5	129.6
	10	870.4
103	10	231.1
	20	1768.9
104	10	115.9
	20	884.1
105	10	700.0
106	10.8	1883.9
	14.0	2116.1
107	10	607.9
	20	392.1

These diameters and lengths just meet each of the constraints that were imposed, using as much of the smaller, less expensive diameter pipe as possible.

Pipes are assumed to be laid in order of decreasing diameter in the downstream direction. Thus for link 104, the 20 cm pipe should be laid from node 106 (the upstream node) and then the 10 cm pipe

used to complete the distance to node 105 (the downstream node). This ensures that the downstream nodes exceed the minimum pressures when such constraints are used.

It may not be possible to meet all the constraints with any combination of the candidate diameters. In this case the algorithm will return with a solution labeled infeasible. For example, the headloss from the reference node to a node with a minimum pressure constraint may be greater than allowable to meet the constraint even when the largest candidate diameter is used for the entire link. The problem would then be infeasible. To attempt to correct this situation, make larger diameter pipes available on paths subject to minimum head constraints, smaller diameter pipes available on paths with maximum head constraints, and both larger and smaller diameters available on paths link nodes with known hydraulic grade lines.

III. Looped distribution systems

A distribution system with loops or circuits can provide the reliability that a branched network cannot. If a break occurs, water is able to flow through the remaining pipes in the loop and move downstream. Since flow occurs in all pipes, the water quality should not have sufficient time to deteriorate if the network is designed properly. Typical loop patters include a grid pattern with a central feeder line that normally carries the bulk of the flow (Figure 2a) or a grid pattern with a main looped feeder (Figure 2b).

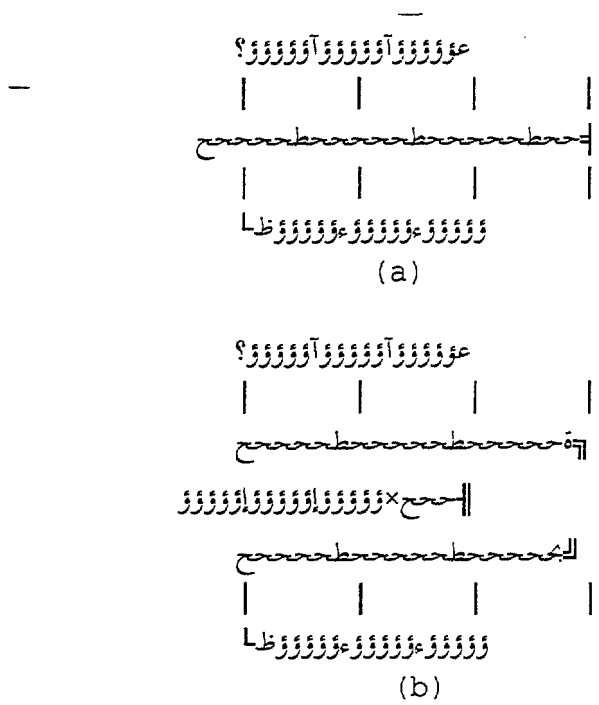

Figure 2. Examples of Looped Distribution Systems

The pressures and flows in looped distribution systems are solved by writing a series of nonlinear equations based on conservation of flow and energy.

105

1. continuity equations / conservation of flow

There are two type of equations that are used to determine the flows in the links. The first type is based on conservation of mass, sometimes called a mass balance. It simply states that the sum of the flows entering a node must equal the sum of the flows leaving a node. Thus at each junction

$$\sum Q_{inflow} = \sum Q_{outflow}$$

2. flow equations around loops

The second type of equation is based on the conservation of energy. It states that the sum of the signed head losses around a loop equals the energy input from any pumps on the loop. If there are no pumps, the headlosses must sum to zero. In other words, the energy at a node is the same no matter what direction the node is approached from.

$\sum h_l = \sum E_p$ (for each primary loop)

where E_p = energy added to water by pumps

Note that a sign convention must be adopted to properly sum the headlosses. Typically, flows in a clockwise direction around a loop are considered positive. For example, for the loop and the flow directions given

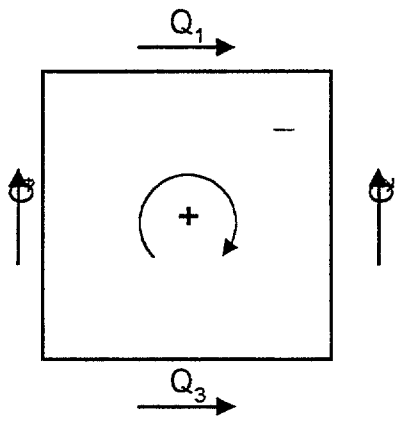

$$\sum h_L = h_{L1} - h_{L2} - h_{L3} + h_{L4}$$

A second type of energy equation can be written for any two fixed grade nodes, which says that the sum of the headlosses along any path connecting the fixed head nodes must equal the difference in heads between the nodes.

$E = \sum h_L - \sum E_p$ (for each R - 1 pair of fixed head reservoirs)

3. solution techniques

i) unknown flows

If the flows in each pipe are treated as unknown, then L equations must be written to solve for these flows. N of the equations are the mass balance equations at the nodes, P are energy balance equations around each primary loop, and R-1 equations are the energy balance between fixed head

reservoirs. The mass balance equations are linear in terms of the flows. The energy equations are written in terms of the flow in the pipe using any one of the flow equations discussed above, e.g. the Hazen Williams equation. The resulting energy equations are nonlinear in terms of the flows. Thus, a system of L nonlinear equations must be solved to provide the flows. Three methods are available:

(1) single link flow adjustment

This method was developed by Hardy Cross and is one of the most commonly used. It is suitable for hand calculation. The technique requires an initial estimate of the flows that satisfy the mass balances at each node. Given these flows, a flow adjustment factor for each loop is calculated based on the energy equations. This adjustment factor is added to the flows in the pipes in the appropriate loop, resulting in an updated estimate of the flows. The process is repeated using the current flow estimates until the adjustment factors fall below some specified criterion. An example and a computer program for the Hardy Cross solution of looped networks is given below.

(2) simultaneous flow adjustment

This technique solves the system on nonlinear equations based on Newton's method or one of its variations. Again, an initial estimate of flows is required. A flow adjustment factor is calculated for each pipe simultaneously, resulting in improved flow estimates. This process is repeated until the adjustment factors fall below some specified criterion.

(3) linear method

This method approximates the energy equations with linear relationships in terms of approximate flows

$h_L = [K\,Q(0)^{a-1}]\,Q$

where $Q(0)$ = the initial or previous estimate of the flow

Q = the current estimate of the flow, i.e. the unknown to be solved for

This formulation results in a system of L linear equations which can easily be solved for the new flow estimates. The process is iterated until the changes in flows between any successive iterations falls below some specified criterion.

ii) unknown heads

Methods which treat the heads at nodes as unknown require N independent equations. These are provided by the mass balance equations written in terms of heads between adjacent nodes. For example, the flow in the link with nodes 1 and 2 as end nodes can be calculate from

$$Q_{1-2} = \left| \frac{h_1 - h_2}{k_{1-2}} \right|^{1/a}$$

Writing each of the mass balances with the above equation substituting for each flow results in a system on N nonlinear equations to be solved. Since there are generally less nodes than there are links, this solution technique requires less space on a computer. Two methods are available for solution.

107

(1) single head adjustment

This method was also described by Hardy Cross, but is not as widely used. Initial heads at each of the nodes are first assumed. Head adjustment factors are calculated based on the mass balance at the node. This process is repeated until the adjustment factors are less than the convergence criterion.

(2) simultaneous head adjustment

This technique solves the system of nonlinear equations based on Newton's method or one of its variations. Again, an initial estimate of heads in required. A head adjustment factor is calculated for each node simultaneously, resulting in improved head estimates. This process is repeated until the adjustment factors fall below some specified criterion.

iii) Hardy Cross

The Hardy Cross method was used for may years. It is suitable for simple networks and can be solved by hand. The method calculates successive flow corrections to the pipes in a primary loop. Hardy Cross is not recommended if alternative computer solutions are available, as Hardy Cross does exhibit convergence problems at times. The approach is

1) Assume flow distribution within each pipe. Flow continuity must be established at each junction node. The headloss equations do not have to be satisfied. However, the closer the initial flow distribution is to the actual flows, the more quickly the method will converge.

2) Choose a direction around a loop that will be considered positive. Traditionally, clockwise direction is chosen.

3) For each primary loop, determine the headloss in each pipe, using one of the hydraulic equations discussed above (e.g. Hazen Williams). A sign is given to the headloss based on the direction of flow and the sign convention.

4) Sum the signed headlosses and sum the signed headlosses divided by flow.
5) Calculate the flow correction for the loop by

$$\Delta Q_{loop} = -\frac{\sum h_L}{1.85\sum {h_L}/{Q}}$$

(Note the minus sign in the formula.)

6) Apply the correction to the assumed flow in each pipe in the loop.

7) Repeat steps 3-6 for the other primary loops
8) Iterate steps 3-7 for each primary loop until each calculated correction is sufficiently small. If the initial flows were approximately correct, the Hardy Cross method will usually converge in 3 iterations.

Note that in applying corrections to pipes common to two loops the corrections for both loops are made to the common pipes. This is required to maintain flow continuity at junctions.

108

Example: Solve for the flows in the following network. Use Hazen Williams to calculate headloss. All the nodes have elevation 0. All the pipes have a C = 100.

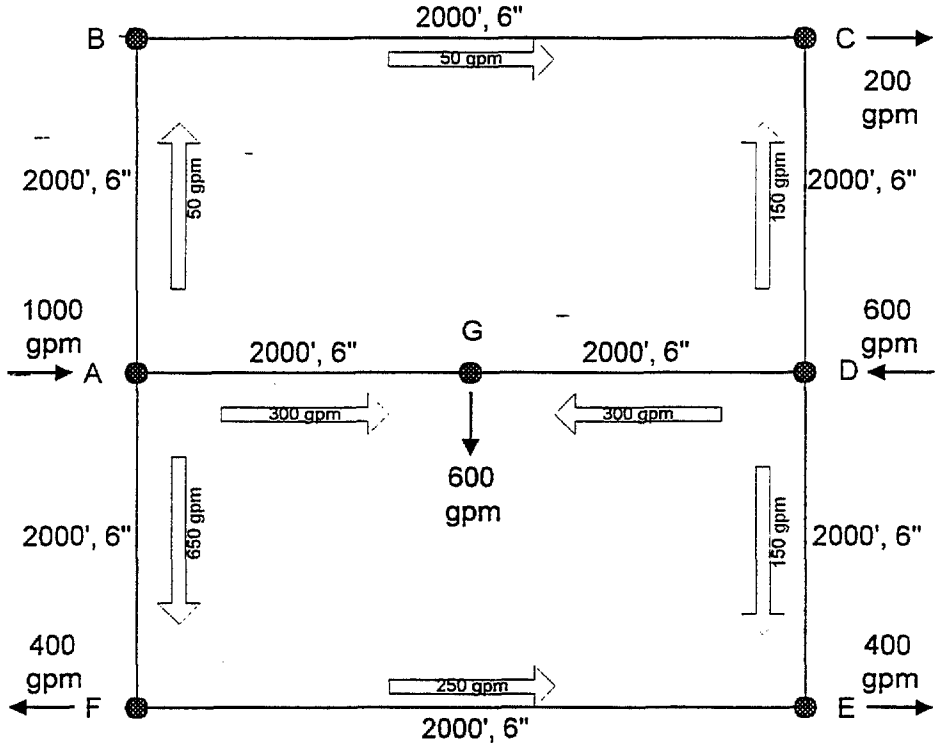

ITERATION 1							
Link	Diam	Length	Flow	h_L/L	h_L	h_L/Q	new flow
	in	ft	gpm	ft/ft	ft	ft/gpm	gpm
AB	8	1000	50	0.000116	0.11602	0.00232	60.4
BC	6	2000	50	0.000471	0.942024	0.01884	60.4
CD	6	1000	-150	-0.0036	-3.60238	0.024016	-139.6
DG	6	1000	300	0.013003	13.00327	0.043344	310.4
GA	6	1000	-300	-0.013	-13.0033	0.043344	-289.6
				sum	-2.54434	0.131865	
				delta flow	10.42972		
AG	6	1000	289.6	0.012179	12.17853	0.042057	301.3
GD	6	1000	-310.4	-0.01385	-13.8528	0.044625	-298.7
DE	4	1000	150	0.025955	25.9549	0.173033	161.7
EF	6	2000	-250	-0.00928	-18.5546	0.074218	-238.3
FA	8	1000	-650	-0.01341	-13.4089	0.020629	-638.3
				sum	-7.68281	0.354562	
				delta flow	11.71268		

109

ITERATION 2							
Link	Diam	Length	Flow	h_L/L	h_L	h_L/Q	new flow
	in	ft	gpm	ft/ft	ft	ft/gpm	gpm
AB	8	1000	60.4	0.000165	0.16478	0.002727	67.9
BC	6	2000	60.4	0.000669	1.33793	0.02214	67.9
CD	6	1000	-139.6	-0.00315	-3.15232	0.022586	-132.1
DG	6	1000	298.7	0.0129	12.90048	0.043186	306.2
GA	6	1000	-301.3	-0.01311	-13.1064	0.043502	-293.8
				sum	-1.85557	0.134141	
				delta flow	7.477255		
AG	6	1000	293.8	0.01251	12.51045	0.042581	295.5
GD	6	1000	-306.2	-0.0135	-13.5048	0.044105	-304.5
DE	4	1000	161.7	0.029832	29.83236	0.184478	163.4
EF	6	2000	-238.3	-0.00849	-16.977	0.071246	-236.6
FA	8	1000	-638.3	-0.01296	-12.9649	0.020312	-636.6
				sum	-1.10384	0.362721	
				delta flow	1.644983		

ITERATION 3							
Link	Diam	Length	Flow	h_L/L	h_L	h_L/Q	new flow
	in	ft	gpm	ft/ft	ft	ft/gpm	gpm
AB	8	1000	67.9	0.000205	0.204516	0.003012	68.9
BC	6	2000	67.9	0.00083	1.660562	0.024453	68.9
CD	6	1000	-132.1	-0.00285	-2.84673	0.021551	-131.1
DG	6	1000	304.5	0.013371	13.37079	0.043904	305.6
GA	6	1000	-295.5	-0.01264	-12.6405	0.042784	-294.4
				sum	-0.25134	0.135703	
				delta flow	1.001137		
AG	6	1000	294.4	0.012561	12.56127	0.04266	294.7
GD	6	1000	-305.6	-0.01345	-13.4523	0.044026	-305.3
DE	4	1000	163.4	0.030397	30.39676	0.186075	163.6
EF	6	2000	-236.6	-0.00838	-16.7606	0.070827	-236.4
FA	8	1000	-636.6	-0.0129	-12.903	0.020267	-636.4
				sum	-0.15788	0.363855	
				delta flow	0.234545		

iv) Method Comparison

Whenever working with systems of nonlinear equations, the reliability of the solution technique is important. All of the methods described above require initial estimates of the unknowns to start the solution process. If these estimates are very different from the correct values, the techniques may not converge to the correct answer. Studies have shown that the simultaneous flow adjustment method and the linear method are the most likely to accurately converge. The other three techniques can exhibit convergence problems. The Hardy Cross method appears more likely to fail when the energy equations contain some links with very high headlosses and some links with very small headlosses.

110

IV. Peaking factors

Peaking factors are used to create most-limiting demand conditions. They are developed from the diurnal demand curve, with maximum day demands used as the base demand. Typical peaking factors are

1) peak hour demand / maximum day demand: 1.3 - 2.0
2) minimum hour demand / maximum day demand : 0.2 - 0.6
3) maximum day demand / average day demand: 1.2 - 2.5

Generally, as the towns become smaller, peaking factors become more extreme - peak hour / max day is at higher end of range and min hour / max day is at smaller end of range.

V. Model initialization for limiting conditions

Generally used for steady state models. Each of the following limiting conditions is analyzed. Initializations are provided below.

Operational / demand condition	Service pumps	Booster pumps	Storage
maximum day demand or maximum pumping rate	Enter pump curves or set input equal to max day demand or max pumping rate	From storage: initialize as out of service. In-line: initialize as in service, enter pump curve	Initialize as nodes with no demand
maximum storage replenishment rate	Set input equal to max day demand or max pumping rate	From storage: initialize as out of service. In-line: initialize as in service, enter pump curve	Initialize as reservoirs with water service elevation at overflow elevation or with demands equal to max replenishment rate
max day demands plus fire flow demand	Set input equal to max day demand or max pumping rate	From storage: initialize as out of service. In-line: initialize as in service, enter pump curve	Outside area of influence: initialize as reservoir with water level where operational storage depleted. In area of influence, initialize as reservoirs equal to emergency storage level
peak hour demands	Set input equal to max day demand or max pumping rate	From storage: initialize input equal to storage output or as in service with pump curves. In-line: initialize as in service, enter pump curve	Initialize as nodes with inputs equal to storage outflow or initialize with water level at desired hydraulic elevation.

VI. EPANET

Developed by USEPA as hydraulic model coupled with contaminant transport model. Flow model is dynamic, capable of tracking conditions under varying flows and demands. Model runs under both DOS and Windows, although the Windows model contains more graphics and can handle larger system. System size is limited by amount of RAM memory - there is no fixed limit. Model will simulate flows and pressures, several types of valves, including check and PRV, reservoirs, storage tanks, and pumps.

1. Installation

If the program is provided in a compressed format, you will need to expand it prior to installation. Typically, the program is provided in a ZIP format. You will need PKUNZIP or similar program to expand. Copy EPANET.ZIP t a temporary subdirectory and type

PKUNZIP EPANET.ZIP

(PKUNZIP is frequently renames to just UNZIP. Type the name of whichever program will decompress the file.)

Start Windows. From the File Manager, run SETUP.EXE. This will install EPANET to its own subdirectory and create an icon for its use.

Although not necessary, running Windows in enhanced mode allows for a larger system to be modeled and improves the model run times. Add the following line to your AUTOEXEC.BAT file

SET EPANET=32

Note that there are no spaces around the = sign. For advanced users, editing the SOLVER.PIF file to force SOLVER.EXE to run in full screen mode, rather than windowed mode, will also increase the speed of the program.

The text editor that is supplied with EPANET is DOS based. If you wish to change it to a Windows based editor or spreadsheet, add the following lines to the EPANET.INI file found in the Windows subdirectory:

[EDITOR]
Program=<progname>
Caption=<window title>

where the names in <> should be filled in appropriately. The editor or spreadsheet must be set to produce pure ASCII text files. Select an editor capable of working with files > 64K. This excludes NOTEPAD.

The full manual is provided on disk (usually in ZIP format) as several files in Windows WRITE format (which comes with Windows). Each file can be loaded into WRITE and printer.

2. Data Files

One input file is required to run EPANET. An additional map and verification files are not required but are recommended. The input file is an ASCII text file divided into sections labeled with [], e.g. [PIPES]. Comments can be added starting with a semicolon. Lines are limited to 80 characters in length.

152

The specifications within each section are given in the EPANET manual and the help file. Input is free form, the entries do not need to appear in specific columns of a line. The minimum sections required for a hydraulic model are [JUNCTIONS] [PIPES] and [TANKS]. Note that junctions (nodes and tanks) and pipes (pipe segments, pumps, and valves) must be defined before any other reference. The standard section listing in order for a steady state hydraulics analysis is:

[TITLE]
[JUNCTIONS]
[TANKS]
[PIPES]
[PUMPS]
[VALVES]
[REPORT]

If a dynamic analysis is used, then the following sections are added

[STATUS]
[CONTROLS]
[PATTERNS]
[TIMES]

If a water quality analysis is used, then the following sections are added:

[QUALITY]
[SOURCES]
[REACTIONS]

An [OPTIONS] section is usually placed at the end of the file.
Among other things, the [OPTIONS] section can be used to set the units used for the simulation. SI units are liters/sec for flow, meter for length and head, and mm for diameters.

Two optional files can also be used and are recommended. They are specified in the [OPTIONS] section. The first is a map file which lists each node and corresponding x,y location in a [COORDINATES] section. Optional text labels can be included in the [LABELS] section. The x,y measurements can be in any arbitrary scale. They are used for display purposes only, and do not affect the hydraulic calculations.

The second auxiliary file is a verification file. It lists each node with all the links that are attached to the node. Because numbering and transcribing the nodes and links is usually where most of the modeling errors are made, using a verification files will help identify data entry problems.

Very brief summaries of each section type are provided below. Full details are available from the EPANET manual or help file.

[TITLE]
Used to identify the model run. Up to 3 lines of text.

[JUNCTIONS]
Used to ID junction nodes and corresponding elevations and demands. Use negative demands for fixed inputs. An optional pattern id can also be specified for dynamic models.

[TANKS]
For reservoirs, an ID and elevation are entered. For tanks, an ID, the bottom elevation of the tank, the initial water level above the bottom of the tank, the lowest water level above the bottom of the

tank, the highest level above the bottom of the tank, and the tank diameter are entered. Tanks are assumed to be cylindrical by EPANET.

[PIPES]
The pipe ID, head and tail nodes, length, diameter, and roughness coefficient are entered. Minor loss coefficients can be listed here. Check valves are also specified here.

[PUMPS]
EPANET treats pumps as links in the model. A pump ID, head and tail node, and a description of the pump characteristic curve are entered.

[VALVES]
EPANET treats valves (other than check valves) as links in the model. A valve ID, the head and tail nodes, the diameter, the valve type (pressure reducing, pressure sustaining, pressure breaker, flow control, or throttle control), the setting for the valve, and a minor loss coefficient are entered.

[REPORT]
Describes the output report to be created. Specific nodes or links can be examined.

[STATUS]
Used to initialize the settings of links at the start of the simulation. Pumps can be open or closed. Relative pump speed can be given. Valve (PRV, PSV, FCV, TCF) settings can be open or closed. A pipe can be open or closed, which is used to simulate gate valves in the system.

[CONTROLS]
Allows pumps, valves, and pipe setting to change at given times or when specific pressures or tank water levels are reached.

[PATTERNS]
Specifies how water demands and sources vary with time. A pattern ID is provided along with a series of multipliers to be applied to the demands. The default time period is 1 hr, and this can be changed in the [TIMES] section. As many patterns as needed can be specified.

[TIMES]
Sets the time step parameters for the simulation, including the duration of the simulation and the hydraulic, pattern, and report timesteps.

[OPTIONS]
Sets values for network properties and simulation options including units, headloss formula, the verify and map file names.

Other sections which provide alternative entry formats include

[DEMANDS]
Alternative to the [JUNCTION] section for entering baseline demands.

[ROUGHNESS]
Provides an alternative to the [JUNCTION] section for altering roughness coefficients for groups of pipes.

3. Analyzing EPANET Results

As a Windows program, EPANET presents results in a number of different Windows. The Browser window allows for the simulation time, node, and link to be selected. Node information includes demand, elevation, hydraulic grade, pressure, and water quality. Link information includes diameter, flow, velocity, headloss/length, and average water quality. If a map is visible, the variable will be color coded on the map and the specific node or link will be highlighted.

The Report menu can generate spreadsheet-like tables for the current time of all nodes or links or a time series for the current node or link.

The graph menu can generate a time series plot of the current node or link.

VII. Model Output Analysis

The model output can be used to test for system deficiencies. Deficiencies an a water distribution system are generally indicated by inadequate pressure. The model is useful in evaluating the causes and analyzing corrective actions.

Check that major trunk mains are able to meet the necessary storage replenishment rate. If any of the following conditions occur in a pipe segment, they are generally considered deficient and should be corrected:

1) velocities greater than 1.5 m/s (up to 3 m/s may be acceptable, but high headloss can result and the potential for water hammer is greater)

2) headlosses greater than 10 m / 1000 m

3) large diameter pipes (16 inch or greater) with headlosses greater than 3 m / 1000 m

The general solution to each of these deficiencies is to increase pipe diameters. These conditions should be treated as general guidelines, not as firm rules.

Pumps should be checked that they deliver adequate flows over full range of system demands., including average day demands. Conservative practice in multiple pump facilities is to provide maximum day flows with the largest pump out of service.

C. Maps and Drawings

I. Comprehensive map (or wall map)

Map of entire distribution system used by system manager. Generally does not display all details. Typically includes:

street names
water mains
sizes of mains
fire hydrants
valves
reservoirs and tanks
pump stations
water source
scale
orientation arrow
date last corrected
pressure zone limits (may change)
closed valves at pressure zone limits

Typical scales ranging between 500 and 1000 ft to an inch.
Update once or twice a year or after major system extension.

II. Sectional maps or plat

Provides detailed picture of section of distribution system. Used for day-to-day operation. Several maps are required to cover the entire system. Typically includes

section designation or number
adjacent section number
street names
mains and sizes
materials of mains
date of main installation
distance from property line
fire hydrants and numbers
valves and numbers
valve sheet designation shown in margin
intersection number
block numbers
lot numbers
house numbers
water account numbers
measurements to service lines
distances main to curb box
distances to angle points
distances to fittings
dead ends and measurements
date last corrected
orientation or north arrow
scale
closed valves at pressure zone limits
service limits
tanks and reservoirs
pump stations
pressure zone limits

Typical scales are 50 to 100 ft to an inch.

Sectional maps should not overlap but should butt up against each other to avoid confusion. Each should be indexed, with the comprehensive map used as a base. Sectional maps must be updated more frequently than comprehensive maps, typically monthly or quarterly.

III. Valves and hydrant maps

Pinpoint valves and hydrants throughout the distribution system. Provide measurements from permanent reference points to each valve in system. Should include direction to open, number of turns to open, model, type, date installed. last date tested or repaired. May either be similar to a sectional map with a corresponding table, or an intersection map at a very large scale (20 to 30 ft to an inch)

IV. Plan and profile drawings

Show pipe depth, pipe location (both horizontal and vertical displacement), and the correct distance from a starting reference point.

V. Supplemental maps

Some large systems keep an arterial map at a 2000-4000 ft to an inch scale of large mains (>= 8 inches) for use in system analysis. Pressure zone maps or leak frequency maps can also be useful

VI. Card records

Most systems maintain card or database records for pipes, valves, hydrants.

ج. Design Standards (by Donald Lauria, University of North Carolina)

I. Introduction

Most developing countries have several different agencies engaged in the planning and design of community water and sanitation systems. It is common for each agency to have its own set of design standards. Frequently, the standards are based on norms of industrialized countries and thus result in systems that are very expensive. When this occurs, problems usually results.

If the beneficiaries of water and sanitation systems cannot afford them because they are too expensive, then there may be inadequate funds for operation, maintenance, repairs, and expansion. The systems may fall into disrepair, resulting in deterioration of service over time. Needed expansions may not take place. The inevitable result is excessive community dependence on government for subsidies and assistance, which frequently are unavailable.

To avoid this unfortunate condition, it is desirable that each community be responsible for paying the costs of its own system. This means tailoring the level of water and sanitation service to each community's ability to pay. This in turn may require a separate set of design standards for each system instead of a single set of identical standards for all systems. Almost without exception, standards based on less extravagant levels of service are needed to achieve the goal of financial self sufficiency than those currently in use.

It is usually difficult to develop an appropriate set of design standards for each community. Such standards need to be adopted on the basis of trial and error, with the planner/designer investigating successively lower standards until a satisfactory and affordable design emerges. This is a time consuming process that few planning agencies are willing to undertake.

II. Levels of Service

In selecting an appropriate level of service and corresponding set of design standards for water and sanitation systems, the main goal is financial self sufficiency for the community so that it will not be excessively dependent on others and can therefore control its own destiny. This means that the costs associated with paying for and running the system must not exceed the community's ability to pay.

A second important principle in selecting the level of service is that the community itself should be the major decision maker. Service and design standards that are imposed on a community without consulting its members are frequently doomed to failure. This means holding public meetings to inform the community of alternatives, their associated costs, and to determine the willingness of the community to pay them.

In selecting a level of water supply service, it is almost always necessary to provide a level higher than the one that already exists; furthermore, the level need not be very much higher than the existing one. For example, consider a community in which most houses have their own wells which have become polluted, necessitating the construction of a new system. If the selected service level for the new system consists of public taps, they may not be used because people may prefer

the convenience of their wells, even though they are polluted. Public taps might also be inappropriate for a community where vendors are delivering water to each house because they are less convenient than the existing service level. On the other hand, public taps probably are appropriate for places where people are presently having to walk long distances to fetch water. In such communities, individual house connections probably provide a level of service that is too high because they far exceed the users' expectations.

The level of service for sanitation must be consistent with that for water supply. Clearly, it would be inappropriate to provide a piped sewer system in a community where water supply is by public taps. Correspondingly, pit privies and latrines may be inappropriate for houses with individual connections and multiple taps.

Four of the major types of water supply service for piped systems in ascending order of service level are 1) public taps, 2) yard/patio connections, 3) single house taps (sanitary core), and multiple taps (conventional). Each type provides greater convenience than the previous level. The sanitation levels associated with these are 1) pit privies/latrines, 2) pour-flush latrines, 3) septic tanks or latrines with drainfields or soakaways, and 4) piped sewerage. A fifth level of water supply would provide fire protection.

With each level of service, the cost per capita increases by a factor between 1.5 and 2.0. For example, conservatively estimated, the cost per capita for public tap system is in the order of US$ 15; a yard tap system costs about US$ 30; a single-house tap system costs about US$ 45; and conventional water supply costs about US$ 75. Hence, a conventional system is about six times more expensive than a public tap system. Roughly the same applies to sanitation. Note that the major jump in convenience benefits results in providing water on the premises (yard tap) instead of at a public tap in the street. A sanitary core provides greater convenience than a yard tap, and multiple taps provide greater convenience than a sanitary core, but the marginal increases in these convenience benefits are not nearly as great as those associated with using yard taps instead of public taps.

In selecting the level of service, consideration needs to be given to upgrading over time. Initially, public taps might be provided which, in a period of, say, 5 years, can be upgraded to yard taps or connections.

In developing countries, it is unusual to provide the same level of service for an entire community. More commonly, part of a community may receive house connections while the rest is served with public taps. Sometimes, population or housing density is used as a guide for proposing the mix of connections and public taps. The standards proposed by COPECAS in Guatemala, which seem reasonable, are as follows:

Level	Community Population	Connections %	Connections Lcd*	Standposts %	Standposts Lcd	Latrines %
I	Dispersed	--	--	--	--	100
II	100-500	--	--	100	40	100
III	500-2,000	50	100	50	40	50
IV	2,000-10,000	60	150	40	50	40

V	10,000-50,000	70	200	30	50	30
VI	>50,000	85	225	15	50	15

* liters per capita per day

III. Design Periods

A design period is the future period for which a system is intended to have excess capacity. If a design period of, say, 10 years is selected for a water treatment plant, this means that the engineer wants the plant to be able to meet demands for 10 years beyond the time when it is constructed. Of course, the plant may be able to meet demands for longer (or shorter) than 10 years if the actual rate at which demand grows is different than the rate anticipated by the designer. Plant capacity depends, then, on two factors, the selected design period and the anticipated growth in demand. Normally, different design periods are used for the major components of water and sanitation systems.

In projecting or estimating future demands, it is common to assume linear or geometric rates of growth. A rate of, say, 2% per year is an example of geometric growth, and a rate of, say, 20 persons per year (or 20 persons per year per 1000 initial population) is an example of linear growth. A growth rate of 2% per year for water demand is higher than that found in most industrialized countries; it is not unusual for developing countries. Doubling time is roughly equal to 70 divided by the growth rate in percent. Hence, a community whose population is growing at 2% per year would be expected to double its population every 35 years; a 3% rate implies doubling every 23 years. A linear growth rate of, say, 20 persons per year per 1000 initial population is equivalent to 2 persons per year per 100 or about 2% per year. Hence, a growth of 40 persons per year per 1000 is about 4%, which is very high.

Probably the main reason for selecting a design period and providing excess capacity in facilities depends on the concept of economies of scale. Other reasons include the concept of useful life and rapidly increasing costs due to inflation. Economies of scale exist if average costs decrease as scale increases. Most consumer products and most components of water/sanitation systems have economies of scale. Consider a commodity that costs 100 for a quantity of 10; the average cost is 100/10 = 10. Assume this same commodity costs 160 for a quantity of 20; the average cost is 8. Hence, average cost decreased as scale increased. Therefore, economies of scale exist and it is probably economical to buy the giant economy size; that is, to buy more than one presently needs in order to capture the economies of scale.

In all cases where there is a set-up cost, economies of scale exist, and it is preferable to provide excess capacity. For example, moving equipment onto a construction site incurs a set-up cost before any work is done; similarly, traveling to a store to make a purchase incurs a cost before any purchase is made. In these cases, it is best to capture economies of scale by purchasing more than is immediately needed. It is seldom optimal to select a design period of zero; that is, to meet only present demands. This can usually be justified for only two reasons: (1) it will be a long time, if ever, before the excess quantity is ever used, or (2) sufficient funds are not available to enable purchasing ahead of demand.

The larger the portion of total cost represented by the set-up cost, in general, the longer should be the design period. Projects with large set-up costs usually have large economies of scale.

The economy of scale factor (b) measures the magnitude of economies of scale and hence can be used to select an optimal design period. This factor denotes the percentage increase in cost per one percent increase in scale or capacity. Consider the example in para. 3.3: cost increased by 60% (from 100 to 160), the scale increased by 100% (from 10 to 20). Hence, the economy of scale factor is 60/100 = 0.6. A small, economy of scale factor, say 0.3, implies only a 30% increase in cost if scale or capacity doubles. It follows that small economy of scale factors denote large economies of scale for which the design period should be relatively long. For b = 1.0, cost increases 100% for a 100% increase in scale. In this case, there are no economies of scale and the design period, if greater than zero, should be based on other considerations.

A value of b can be estimated for different water and sanitation components by fitting the cost model $C = aX^b$ to cost (C) and capacity (X) data for each component. Ordinary least squares can be used to estimate b by regressing log C against log X.

Treatment plants, pumping stations and water supply facilities often have a value of b of about 0.7; pipelines and networks usually have a value of b of about 0.5; and storage tanks have b of about 0.6. These values can differ substantially from one country to another or from one region to another within the same country.

A large technical literature exists on the use of b for determining the optimal design period x* (see for example Lauria et al., *Jour. of Environmental Engineering Division*, April 1977). Equations in this literature must be used with caution; they are only guides to judgement, and they do not cover all situations.

All the equations for determining optimal design periods that are in the literature cannot be repeated here. However, a few guidelines may be helpful. If a system has an initial deficit in capacity instead of demand and capacity being exactly in balance, s* should be larger than what is obtained by using the equation above. For example, the design period for a new system in a community with no existing facilities or with facilities that are meeting only a small fraction of the existing demand should probably be 50% larger than the value obtained from the above equation.

It is seldom possible to make an infinite number of expansions of the same facility, which makes it inappropriate to use equations like the one above. If a facility is not likely to be expanded any more than 2 or 3 times, then a special economical analysis would have to be made to determine the optimal design period.

After taking account of all the things that make use of the above equation for x* invalid (such as limitations on the number of expansions, initial deficits, budget constraints, and restriction on future opportunities to plan and construct facilities), it may be roughly correct to use a design period of between 5 and 10 years for components with equipment (treatment plants, pumping stations and tanks), and not more than 20 years for pipes and networks. In any event, ability to pay may be the determining factor of the amount of excess capacity the community can afford to include in its facilities.

IV. Design Flows

Design flows are usually obtained by multiplying the expected population at the end of the design period by an assumed per capita flow. Normally, a peaking factor is used to convert the average design flow to a maximum daily or maximum hourly value, depending on the component to be designed. To the domestic flows must be added quantities for commercial, industrial and public use plus an allowance for unaccounted losses.

Average per capita design flows depend on several factors, level of service perhaps being most important. For public standposts, an average flow of between 25 and 50 lcd is usually assumed. While 25 lcd is an adequate quantity of water per person, this value could be unrealistically low for design purposes. For example, if each standpost were designed for, say, 100 persons with a peak hourly factor of, say, 1.5, then the peak hourly design flow per standpost would be only 2.6 l/min, which is too low. At this rate, it would take 6 minutes to fill a bucket. Furthermore, if the pressure at the tap were 5 m or more, a typical faucet would probably deliver at least 4 or 5 times this flow. Hence, the selected design flow for public taps should take account of the number of persons per tap. With 200 persons per tap, an average flow of 25 lcd is probably satisfactory, but with fewer than 200, a higher average flow is more realistic.

Typical average per capita design flows for yard taps, single house taps and multiple house taps are in the order of 50, 100 and 200 lcd, respectively. Hence, at each successively higher level of service, the average flow doubles. These flows are probably minimum values. Some standards recommend flows based on population density. The EMPAGUA standards for Guatemala City, for example, recommend an average value of 100 lcd for places with density of 600 persons per ha, increasing to 350 lcd for low densities of 100 persons/ha.

In small communities, commercial and other water demands are frequently ignored, which is probably acceptable. However, larger towns with commercial establishments need to take account of these flows. In all cases, a reasonable value for unaccounted losses in newly constructed systems is between 20 and 25%.

Some design standards recommend fire flows, even for small towns, which is unreasonable. It is not uncommon to find recommendations for 2 or even 3 fire flows simultaneously, and one set of standards in Peru recommends that fire protection should be provided at any point in the network, which is uncalled for.

To design for fire flows in places that do not have fire fighting equipment is unreasonable. It is a rate small town that has equipment for even one fire flow much less 2 or 3. Furthermore, to even consider fire flows unless the network is to be designed using a computer program is absurd. Since the location of the fire flow is uncertain, the flow must be moved to different locations in designing the network. This essentially requires use of a computer. Also, to provide fire protection at all locations would result in all pipes of the network being oversized to handle such flows. Few communities can afford such a luxury; rather, fire protection is usually restricted to high-value districts of the community. The COPECAS standards for Guatemala recommend no fire protection for places smaller than 20,000 persons; where protection is provided, the design flow is 5 lps. These values seem reasonable.

121

Peaking factors play a critical role in design since most hydraulic facilities must be sized to handle peak flows. Typical peaking factors for maximum daily flows are between 1.2 and 1.5 (max day/average), and peak hour factors are usually between 2.0 and 3.0 (max hour/average). Unfortunately, few studies have been conducted to actually measure peaking factors, in part due to the lack of metering equipment. It is important to recognize that peaking factors are higher in small communities than in larger ones.

In water-systems, source works, transmission mains to conduct water to the community, and treatment plants are usually designed for maximum daily values because such demands may persist for extended periods of time. Networks and pumping stations are usually designed for peak hourly flows because these facilities must have sufficient capacity to meet instantaneous demands. Storage tank volumes are usually based on average flows. In wastewater systems, pipelines, networks and pumping stations are usually designed to handle peak hourly flows, and treatment plants are sized for average values.

V. Pipelines, Networks and Tanks

The sizes of pipelines that deliver flows by gravity depend on the available hydraulic gradient and the design flow. This applies to both open channel and pressure systems. The sizes of pipelines that delivery pumped flows usually depend on a design velocity which is assumed to be economical or optimal; a value of about 1.5 m/s is typical.

Some standards require the designed to make a cost analysis to determine optimal design velocity. In most cases, this is unnecessary. The optimal design velocity depends on the relative prices of power and pipeline construction. If power is relatively expensive compared to construction costs, it may be optimal to enlarge the pipe; that is, to design for a velocity lower than 1.5 m/s. Conversely, if power is relatively cheap compared to pipe construction, a velocity higher than 1.5 m/s may be optimal. In most countries, however, if power is expensive, so too is pipe, in which case a design velocity of about 1.5 m/s should be acceptable.

For network design, use of the computer is strongly recommended. Networks, whether for water or sewage, are very expensive, and the computer enables the designer to select sizes that minimize cost. Also, networks are complicated and hard to design; the computer ensures that they will function as intended.

In most networks, pipe length is the principal determinant of cost; it is usually more critical than diameter. This is because there are large economies of scale with respect to diameter but none with respect to length. For this reason, great care is needed in making network layouts so as to keep pipe length as short as possible.

Branched networks are usually less expensive than ones with loops. However, they are less reliable; a break in one pipe will interrupt service to all downstream users. Branched networks may be nearly as expensive as looped ones in linear communities where houses are stretched out along a main road. Branched networks are particularly appropriate for use with public tap systems; for communities with individual house connections or public taps that serve at most only a few houses, it is generally necessary to place pipes on all the streets where houses are located, resulting in a looped system.

Branched networks are much easier to design than ones with loops. Computer programs that use optimization techniques such as those distributed by the World Bank make branched network design relatively simple and ensure minimum cost. Looped networks must be designed by trial and error to seek a least cost solution, which essentially requires use of a computer program like those available from the World Bank.

If the level of service is to be upgraded over time from, say, public taps to house connections, it may be preferable to design the initial branched network for the taps with sufficient capacity so that it can serve as the primary network in the looped system when it is finally upgraded to house connections.

Most standards recommend minimum diameters for water networks; 100 mm for primary networks and 50 mm for secondary are typical values. While such guidelines can be useful, they should be flexible. A community in very hilly terrain, for example, might benefit by using smaller minimum sizes to avoid extremely high pressures at points of low elevation.

Minimum pressure standards for water networks are usually in the range of 5 m to 15 m. If a computer is used for design, its ability to accurately simulate the pressures in a network under different flow conditions enables selection of lower minimum pressures may be needed as an added factor of safety to account for inaccuracies in design. Seldom is it necessary or desirable to specify minimum pipeline velocities in a network.

Occasionally, design standards recommend the use of individual house tanks for storage rather than a central tank for the system on the assumption that this will enable the network to be designed for maximum daily instead of peak hourly flows. Unless each house tank is fitted with a flow restrictor on its inlet, the network may still need to be designed for peak hourly flows. In any event, individual tanks are usually more expensive, less reliable, and more risky to health than a central tank for the system.

In Latin America, it is common to provide a separate line from the source works to the storage tank and to operate the tank on a fill and draw basis. Such systems are relatively easy to operate and design since they have only a single source of water input to the network. However, they can be much more expensive than systems which use floating storage tanks where the network itself is used to transmit water from the source to the tank, thus eliminating a separate transmission line. However, the network must have sufficient capacity to fill the tank; this usually requires sizing at least some network pipes under minimum demand conditions (nighttime) while the rest of the pipes must be sized for peak demands. Also, during periods of peak demand, the network has two points of water input, one from the tank and the other from the source of supply. The increased difficulties in the design and operation of floating tank systems are usually more than offset by savings in cost.

Some standards recommend different storage tank volumes depending on whether floating or fill-and-draw systems are used. There is little rationale for such differences. The required volume of storage tanks cannot be precisely determined without accurate information on demand variations throughout the day; tanks are needed, after all, to meet peak hourly demands. The common standard of making tank volume equal to 25% of average daily design flow is reasonable; more than this in most cases would simply provide reserve in the event of pump failure at the source.

Recent developments in the design of small-bore sewers may make this an attractive alternative to conventional sewage. Small diameters are possible because sewage solids are removed in individual septic tanks at each house. The cost savings in smaller pipes must be weighed against providing individual septic tanks and, more importantly, in maintaining them so that sewers do not clog. The World Bank distributes computer programs to assist the design of both conventional and small-bore sewers.

PIPE MATERIALS

OBJECTIVES

1. REVIEW THE VARIOUS TYPES OF PIPES AVAILABLE FOR WATER NETWORKS AND SERVICE

2. REVIEW THE IMPACT OF USING VARIOUS TYPES OF PIPE

3. DISCUSS ADVANTAGES AND DISADVANTAGES OF VARIOUS TYPES OF PIPE

DEFINITION OF PIPELINES

TRUNK MAINS

- CONVEYS WATER FROM SOURCE TO TREATMENT; TREATMENT TO RESERVOIR; RESERVOIR TO RESERVOIR
- HISTORICALLY THESE HAVE BEEN OWNED BY MEKOROT
- DO NOT USUALLY HAVE CONNECTIONS

DISTRIBUTION MAINS

- FORM THE DISTRIBUTION NETWORK
- HAVE MANY CONNECTION SUCH AS THE SERVICE LINES
- VARY IN SIZE FROM 2" (50mm) TO 18 " (450mm) AND LARGER
- TYPICAL SIZES LOCALLY ARE 3, 4, 6 INCH (75mm, 100mm, & 150MM) INSIDE DIAMETER

SERVICE LINES

- CONVEY WATER FROM DISTRIBUTION MAIN INTO CONSUMERS PROPERTY
- GENERALLY 1/2 INCH FOR RESIDENTIAL PROPERTY, BUT CAN BE MUCH LARGER FOR INDUSTRIAL SITES
- METERS ARE GENERALLY AT THE END OF THE SERVICE LINE

HOUSE CONNECTIONS

- FROM POINT OF METER THIS IS THE OWNERS RESPONSIBILITY

PIPE MATERIALS

1. ASBESTOS CEMENT
   - GENERALLY OUT OF FAVOR
   - SOME LOCAL USE (RAFAH)
2. DUCTILE IRON
   - STANDARD OF MANY UTILITIES
3. GLASSFIBER REINFORCED PLASTIC (GRP)
4. STEEL PIPE
   - ELECTRIC RESISTANCE WELDED
   - SPIRALLY WELDED
   - CAN BE BLACK, GALVANIZED, LINED AND COATED (COATINGS AND LININGS DISCUSSED LATER)
5. POLYVINYL CHLORIDE (PVC)
6. POLYETHYLENE (PE)
   - LOW DENSITY (LDPE)
   - MEDIUM DENSITY (MDPE)
   - HIGH DENSITY (HDPE)

STEEL PIPE COATINGS AND PROTECTION

INTERNAL LINING

- CEMENT MORTAR LINING (AWWA) (CENTRIFICALLY APPLIED)

EXTERNAL COATING

- POLYETHYLENE TAPE (AWWA)
- SYNERGY (POLYKEN TECH) THREE LAYERS CHEMICALLY FUSED TOGETHER
- COMPRESSION COAT (AWWA) A CONCRETE COATING REINFORCED WITH WIRE MESH

INTERNAL & EXTERNAL COMBINATIONS

SIZES

- 1/2 TO 80 INCH LOCALLY

ADVANTAGES OF COATED PIPE

- OFFERS LONG LIFE UNDER AGGRESSIVE SOILS AND WATER CONDITIONS

- STEEL PIPE PROVIDES ENGINEERS A HIGH LEVEL OF COMFORT AND A BELIEF THAT PRODUCT WILL LAST

- WILL TAKE ROUGH HANDLING AND POOR WORKMANSHIP DURING INSTALLATION

DISADVANTAGES OF COATED PIPE

- HIGH COST ON MATERIALS AND PLACEMENT

- COATINGS NEED ATTENTION AT JOINTS

- COATINGS CAN BE DAMAGED WITH ROUGH HANDLING WHICH CAN LEAD TO EARLY DETERIORATION AND LEAKAGE

- REQUIRES HEAVY EQUIPMENT TO ASSIST WITH PLACEMENT OF LARGER LINES

RIGID POLYVINYL CHLORIDE

GENERAL USE

- SUCCESSFUL HISTORY OF USE OF PVC PIPE SYSTEMS FOR WATER SUPPLY, SEWAGE, INDUSTRY AND AGRICULTURE

- AWWA STANDARDS FOR PVC MANUFACTURE, DESIGN AND INSTALLATION

LOCAL AVAILABILITY

- AVAILABLE IN SIZES OF 75 TO 630 mm FOR BELL SOCKETS AND 20 TO 110 mm FOR CEMENTED JOINTS

- PIPE AVAILABLE IN OPERATING PRESSURES OF 6, 8, 10, 12.5 AND 16 BARS

ADVANTAGES

- NONCORROSIVE AND CHEMICAL RESISTANT

- SMOOTH INNER SURFACE RESISTS SCALE ACCUMULATION

- LIGHT WEIGHT, EASY TO INSTALL

- LOW COST

- LONG LIFE

- FLEXIBLE, ADJUSTABLE TO SOIL MOVEMENT

DISADVANTAGES

- LONG TERM EXPOSURE TO ULTRAVIOLET RADIATION CAN CAUSE DAMAGE

- REQUIRES CAREFUL HANDLING AND STORAGE TO PREVENT DAMAGE

- REQUIRES CAREFUL INSTALLATION

INSTALLATION, TESTING AND MAINTENANCE AND SERVICE CONNECTIONS GUIDELINES ARE INCLUDED IN THE HANDOUT

POLYETHYLENE PRESSURE PIPE

GENERAL USE

- AWWA INITIALLY APPROVED STANDARDS FOR 1/2 INCH THROUGH 3 INCH FOR WATER SERVICE IN 1978

- AWWA APPROVED STANDARDS FOR 4 INCH THROUGH 63 INCH FOR WATER DISTRIBUTION IN 1992

LOCAL AVAILABILITY

- MANUFACTURED FROM THREE TYPES OF POLYETHYLENE: LOW-DENSITY (LDPE); MEDIUM DENSITY (MDPE); & HIGH DENSITY (HDPE)

- AVAILABLE IN 4, 6, AND 10 BARS WITH SPECIAL ORDERS OF 16 BARS

- SUPPLIED IN STRAIGHT LENGTHS, COILS (HUNDREDS OF METERS) AND REELS (THOUSANDS OF METERS)

ADVANTAGES

- LOW COST

- LIGHT WEIGHT AND EASY TO HANDLE

- LOW COEFFICIENT OF FRICTION

- HIGHLY FLEXIBLE

- RESISTANT TO CORROSION (INTERNAL

AND EXTERNAL)

- EASY TO INSTALL AND MAINTAIN

DISADVANTAGES

- REQUIRES SPECIAL HANDLING AND INSTALLATION TO PREVENT DAMAGE

- SCRATCHES AND NICKS CAN CAUSE LATER FAILURES

- POOR INSTALLATION AND KINKING HAVE BEEN MAJOR REASONS OF PAST FAILURES

JOINING

SEVERAL METHODS ARE USED

- THERMAL BUTT-FUSION - COMMON ON LARGE DIAMETER PIPE

- FLANGED JOINING

- MECHANICAL AND COMPRESSION DEVICES

COSTS

VARIOUS PIPE TYPES/SIZES (DOLLARS/METER)

DIA. INCH	PROT. STEEL EST 1	PROT. STEEL EST 2	PVC	LDPE	HDPE
3	14.81	16.63	1.87	--	2.62
4	18.18	20.42	3.30	--	5.64
5	--	21.97	--	--	--
6	23.05	25.89	7.00	--	--
8	28.87	32.42	13.50	--	--
10	35.80	40.20	21.15	--	--
12	40.83	45.86	26.93	--	--
1	--	--	--	0.32	

NOTES

- PVC AND HDPE COSTS ARE BASED ON A W/P OF 10 BARS
- LDPE IS BASED ON 6 BARS
- THE PROTECTED STEEL ESTIMATES ARE BASED ON INTERIOR CONCRETE LINING AND PLASTIC WRAPPING
- PRICES DO NOT INCLUDE VAT

CONVERSIONS

1" = 25 mm (approximate)
3" = 75 mm
4" = 110 mm
6" = 160 mm
8" = 225 mm
10" = 280 mm
12" = 315 mm

PRESSURE

lbs/sq in	feet head	Bars	meters head
0.4335	1	0.0299	0.305
1	2.306	0.0689	0.703
1.42	3.28	0.0981	1
14.5	33.5	1	10.2

FLOW

1 GALLON PER MIN = 0.075 LITERS PER SEC

1 LITER PER SEC = 13.19 GAL PER MIN

1 GALLON = 4.546 LITERS

AWWA

PVC PIPE

DESIGN AND INSTALLATION

- INSTALLATION
- TESTING AND MAINTENANCE

137

Chapter 7

Installation

This chapter discusses the installation of PVC pipe in trenches, the use of casings, the joining of PVC pipe, the selection and installation of appurtenances, and the use of thrust blocking.

7-1. Installation in Trenches

With all pipe products, proper installation procedures are essential to successful pipe performance. Although recommended installation procedures for PVC pipe do not vary substantially from procedures used with other pipe products, an understanding of significant differences is important. Terminology commonly used in PVC piping installation practice is shown in Figure 15.

The following installation recommendations, where properly implemented, should ensure trouble-free, long-term performance in buried PVC piping systems designed for pressure applications.

Alignment and Grade

All pipe should be laid to, and maintained at, the established lines and grades. Fittings, valves, air vents, and hydrants should be installed at the required locations with valve and hydrant stems plumb.

Trench Construction

Stockpiling excavated material. All excavated material should be stockpiled in a manner that will not endanger the work or obstruct sidewalks and driveways. Hydrants under pressure, valve-pit covers, valve boxes, curb-stop boxes, fire and police call boxes, and other utility controls should be kept accessible.

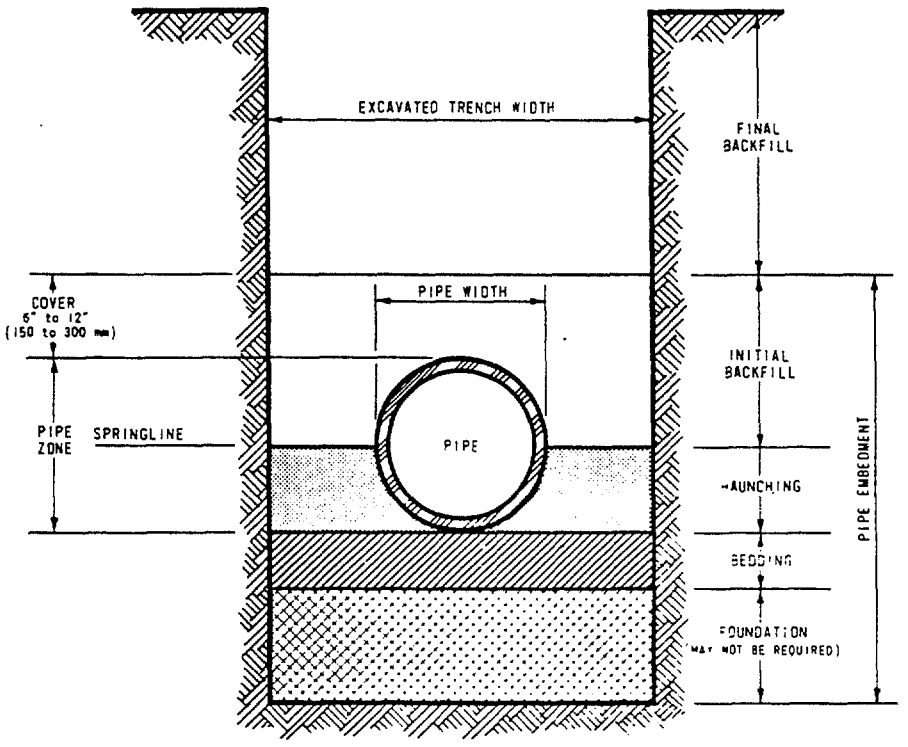

Figure 15. Trench Cross-Section Showing Terminology

Trench width. Trench width at the ground surface may vary depending on depth, type of soil, and position of surface structures. The minimum clear width of the trench, sheeted or unsheeted, measured at the springline of the pipe should be 1 ft (300 mm) greater than the outside diameter of the pipe. The maximum recommended clear width of the trench at the top of the pipe is equal to the pipe outside diameter plus 2 ft (600 mm). If the maximum recommended trench width must be exceeded or if the pipe is installed in a compacted embankment, then pipe embedment should be compacted to a point of at least 2½ pipe diameters from the pipe on both sides of the pipe or to the trench walls, whichever is less.

Dewatering. Where conditions are such that running or standing water occurs in the trench bottom or the soil in the trench bottom displays a "quick" tendency, the water should be removed by pumps and other suitable means (such as well points or pervious underdrain bedding) until the pipe has been installed and the backfill has been placed to a sufficient height to prevent flotation of pipe. Generally, a depth of backfill over the top of the pipe equal to 1½ pipe diameters is sufficient to prevent flotation.

Preparation of trench bottom. The trench bottom should be constructed to provide a firm, stable, and uniform support for the full length of the pipe. Bell holes should be provided at each joint to permit proper assembly and pipe support. Any part of the trench bottom excavated below grade should be backfilled to grade and should be compacted as required to provide firm pipe support. When an unstable subgrade condition is encountered that could provide inadequate pipe support,

additional trench depth should be excavated and refilled with suitable foundation material. Ledge rock, boulders, and large stones should be removed to provide 4 in. (100 mm) of soil cushion on all sides of the pipe and accessories.

Laying of pipe. To prevent damage, proper implements, tools, and equipment should be used for placement of the pipe in the trench. Under no circumstances should the pipe or accessories be dropped into the trench. All foreign matter or dirt should be removed from the pipe interior. Pipe joints should be assembled with care. When pipe laying is not in progress, open ends of installed pipe should be closed to prevent entrance of trench water, dirt, foreign matter, or small animals into the line.

Reaction or thrust blocking. Concrete reaction or thrust blocking should be provided at each hydrant, valve, bend, tee, and at reducers or fittings where changes occur in pipe diameter or direction. Anchorage may also be made to the water-main pipe with rods and clamps. Thrust blocking is discussed in detail in Section 7-5, at the end of this chapter.

Pipe embedment. PVC pipe should be installed with proper bedding providing uniform longitudinal support under the pipe. Backfill material should be worked under the sides of the pipe to provide satisfactory haunching. Initial backfill material should be placed to a minimum depth of 6 in. (150 mm) over the top of the pipe. All pipe embedment material should be selected and placed carefully, avoiding stones (over 1½ in. in size), frozen lumps, and debris. Sharp stones and crushed rock (larger than ¾ in.), which could cause significant scratching or abrasion of the pipe, should be excluded from the embedment material. Proper compaction procedures should be exercised to provide soil densities as specified by the design engineer.

Final backfill. After placement and compaction of pipe embedment materials, the balance of backfill materials may be machine placed. The material should contain no large stones or rocks, frozen material, or debris. Proper compaction procedures should be exercised to provide required densities.

7-2. Casings

Where PVC water pipe is installed under highways, runways, or railways, casings may be required for the following reasons:

- To prevent damage to structures caused by soil erosion or settlement in case of pipe failure or leakage,
- To permit economical pipe removal and placement in the future,
- To accommodate regulations or requirements imposed by public or private owners of property in which the pipe is installed, or
- To permit boring rather than excavation where open excavation would be impossible or prohibitively expensive.

When PVC pipe is installed in casings, skids must be used to prevent damage to the pipe and bell during installation and to provide proper long-term line support. PVC pipe in casings should not rest on bells. Skids should properly position the PVC pipe in the casing. Figure 16 shows a typical skid arrangement on PVC pipe.

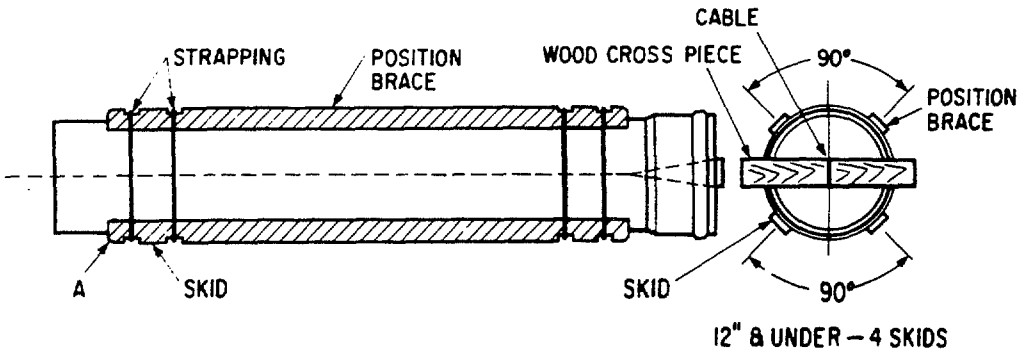

Figure 16. PVC Pipe Casing Skids

Table 18
Table of Casing Sizes

Nominal Pipe Size (Diameter, *in.*)	Casing Size (Inside Diameter) *in*	*mm*	Maximum Skid Support Spacing *ft*	*m*
4	8-10	203-254	4.7	1.4
6	10-12	254-305	6.3	1.9
8	14-16	356-406	7.4	2.3
10	16-18	406-457	8.5	2.6
12	18-20	457-508	9.6	2.9

Skids may extend for the full length of the pipe, with the exception of the bell and spigot portion required for assembly, or may be spaced at intervals. Skids must provide sufficient height to permit clearance between bell joint and casing wall. Skids should be fastened securely to pipe with strapping, cables, or clamps.

Table 18 provides recommendations on casing size required for different sizes of PVC pipe and maximum skid support spacings. Casings are normally sized to provide an inside clearance which is at least 2 in. (50 mm) greater than the maximum outside diameter of the pipe bell, pipe skids, or cradle runners.

Pipe may be installed in the casing using (1) winch drawn cable or (2) jacking. In both methods, exercise care to avoid damage to pipe or bell joints. Use of lubricant (flax soap or drilling mud) between skids and casing can ease installation.

CAUTION: Do not use petroleum products (for example, oil or grease)—prolonged exposure to these products can cause damage to some elastomeric gaskets. Life of wooden skids can be extended by treatment with wood preservatives; *do not use* creosote treated wood, as creosote can weaken PVC pipe through chemical corrosion.

Upon completion of pipe insertion, backfilling in accordance with design requirements can be accomplished. During backfilling, exercise care to prevent floating the PVC pipe out of proper position. Do not use wedges to lock pipe into position during backfill position. When pressure grouting is used for backfilling, exercise caution that excess grout pressure does not distort or collapse the pipe.

7-3. Pipe Joint Assembly

The joining of one pipe to another may be performed using various methods. Gasketed joints and solvent cement joints are covered in the following paragraphs.

Assembly of Gasketed Joints

The assembly of the gasketed joint should be performed as recommended by the pipe manufacturer. The elastomeric gaskets may be supplied separately in packages or prepositioned in the bell joint or coupling at the factory. Note that some joint designs provide permanent factory-installed gaskets. When gaskets are color coded, it is important that the pipe manufacturer or the manufacturer's literature be consulted for the significance. In all cases, clean the gasket, the bell or coupling interior, especially the groove area (except when gasket is permanently installed), and the spigot area, using a rag, brush, or paper towel to remove any dirt or foreign material before the assembling. Inspect the gasket, pipe spigot bevel, gasket groove, and sealing surfaces for damage or deformation. When gaskets are not factory-installed, use only gaskets that are designed for and supplied with the pipe. Insert gaskets as recommended by the manufacturer.

Lubricant should be applied as specified by the pipe manufacturer. Damage to the gaskets or the pipe may result from the use of unapproved lubricants. Use only lubricant supplied by the pipe manufacturer for use with gasketed PVC pipe in potable water systems.

After lubrication, the pipe is ready to be joined. Correct alignment of the pipe is essential for ease of assembly. Align the spigot to the bell and insert the spigot into

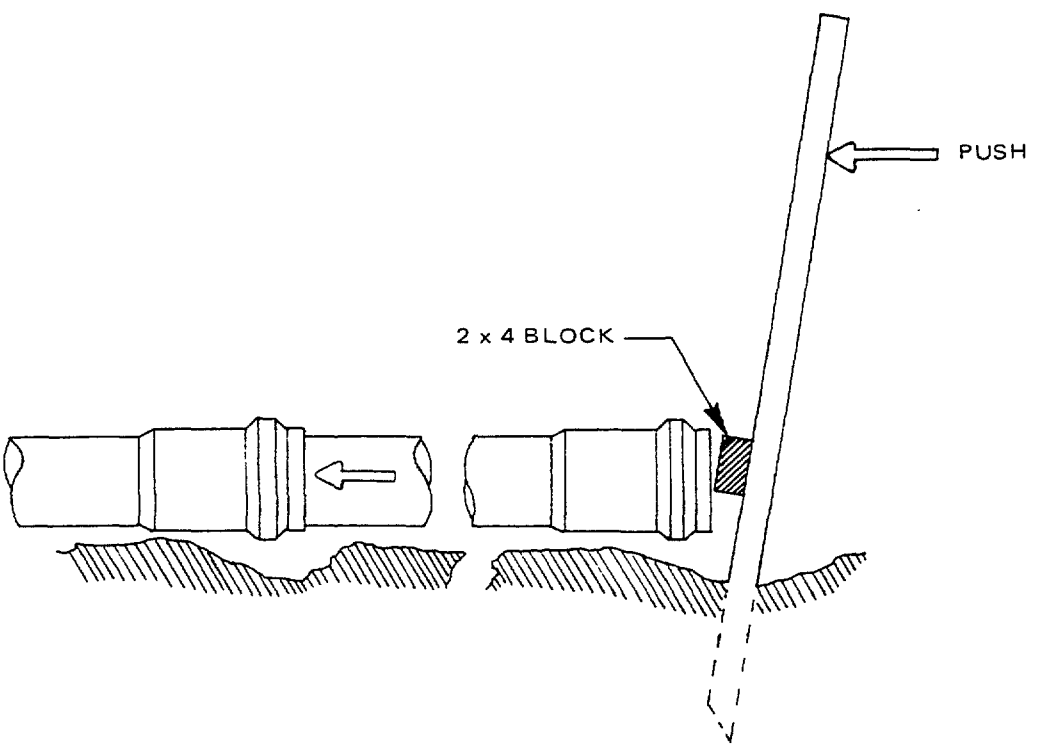

Figure 17. Bar and Block Assembly

the bell until it contacts the gasket uniformly. Do not swing or "stab" the joint; that is, do not suspend the pipe and swing it into the bell.

The pipe should be pushed into the bell or coupling either by hand or with the use of bar and block (Figure 17). Construction machinery should be used only at the direction of the manufacturer. The reference mark (a distinct circumferential line) is placed on the pipe's spigot end by the manufacturer to indicate the correct depth of spigot penetration into the pipe's gasket joint. If undue resistance to insertion of the pipe end is encountered, or if the reference mark does not position properly, disassemble the joint and check the position of the gasket. If the gasket is twisted or pushed out of its seat ("fishmouthed"), inspect components, repair or replace damaged items, clean the components, and repeat the assembly steps. Be sure both pipe lengths are in concentric alignment. If the gasket is not out of position, verify proper location of the reference mark. Relocate the reference mark if it is out of position. Few fittings allow as much spigot insertion length as do pipe bells and couplings.

To join field-cut pipe, it is first necessary to prepare the pipe end. A square cut is essential for proper assembly. The pipe can be cut easily with a hacksaw, handsaw, or a power handsaw with a steel blade or abrasive disc. It is recommended that the pipe be marked around its entire circumference prior to cutting to ensure a square cut. Use a factory-finished beveled end as a guide for beveling in field; ensure proper bevel angle, correct depth of bevel, and proper marking of the insertion reference mark. The end may be beveled using a pipe beveling tool or wood rasp that will cut the correct taper. A portable sander or abrasive disc may also be used to bevel the pipe end. Round off any sharp edges on the leading edge of the bevel with a pocketknife or a file.

Assembly of Solvent Cement Joints

In special applications, solvent cemented joints may be required. Solvent cemented joints should be made in accordance with manufacturer's recommendations or in accordance with ASTM D 2855, "Standard Recommended Practice for Making Solvent-Cemented Joints with Poly (Vinyl Chloride) (PVC) Pipe and Fittings." Proper training of installation crews in the technique of solvent cementing is advised to ensure reliable joints. Techniques must be modified to accommodate significant changes in the environment. (For example, wind, moisture, dust, and temperature require proper consideration.)

Solvent cements used in assembly of PVC pipe should meet requirements established by ASTM D 2564, "Solvent Cements for Poly (Vinyl Chloride) (PVC) Plastic Pipe and Fittings." When making solvent cement joints, safety procedures should be followed as established in ASTM F 402, "Safe Handling of Solvent Cements Used for Joining Thermoplastic Pipe and Fittings."

7-4. Appurtenances

Piping systems include pipe and various appurtenances required in the control, operation, and maintenance of the systems. Proper design, installation, and operation of PVC piping systems must relate to appurtenances as well as pipe.

System Requirements

Control valves. Control valves (gate or butterfly) must be provided in the system to permit isolation of any one line within the system. Secondary lines are valved from main feeder lines. In high value commercial and industrial areas, control valves are normally located at intervals no greater than 500 ft (152 m). In other areas, control valve interval recommended is normally 800–1200 ft (244–366 m).

Safety valves. Pressure relief valves are important in long pipelines for surge control. Air relief valves are desirable at high points in pressure lines where other relief is not available. Blow-off valves are used at low system elevations and dead ends to permit line emptying or flushing when necessary. Vacuum relief valves are used to prevent complications caused by negative pressures.

Fire hydrants. Fire hydrants are normally spaced to provide maximum fire protection coverage of 40 000–160 000 sq ft (3700–14 900 sq m), depending upon the needed fire flow. The distribution lines servicing fire hydrants are normally provided in 6-in. (150-mm) nominal diameter or larger. Hydrant connections from main lines should be valved.

Fittings. Fittings are required for changes in line direction or size and branch connections (for example, tee and cross fittings). Fittings are available in a variety of designs and materials. Cast-iron fittings are generally used with CI (cast-iron) dimensioned PVC water main pipe.

Appurtenance Installation

Control valves. Valve weight should not be carried by PVC pipe. The valve should be supported by a concrete cradle or concrete block with anchors. Valves should connect directly with PVC pipe using elastomeric gaskets supplied by the valve manufacturers. Control valves in pressurized systems may require anchorage, reaction, or thrust blocking to prevent movement from thrust when the valve is closed. Control valves in a pressurized system should be checked to ensure that sufficient resistance to thrust is available when the valve is closed. In some designs, butterfly valves will not function properly on certain sizes of PVC pipe without special nipple adapters.

Safety valves. Valve weight should not be carried by PVC pipe. Heavy valves should be supported by concrete cradles. Lightweight valves (for example, 4 and 6 in., 100 and 150 mm) may be supported by properly compacted soil. Valves should connect directly with PVC pipe using elastomeric gaskets provided by the valve manufacturers.

Fire hydrants. Hydrant weight should not be carried by PVC pipe. Hydrant weight, hydrant lead valve, fittings, and branch tee should be supported by a concrete cradle or cradles. The concrete foundation for the fire hydrant serves as

- Reaction or thrust blocking,
- Anchorage preventing frost heave, and
- Foundation preventing wash out.

(See Figure 18, Fire Hydrant Foundation.)

Fittings. Weight of cast-iron and metallic fittings should not be carried by PVC pipe. Cast-iron fitting weight should be supported by a concrete block or cradle.

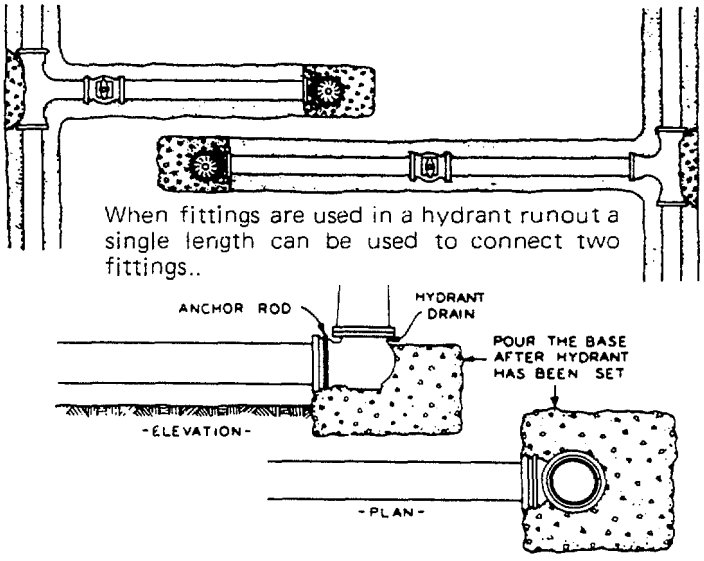

This type of hydrant foundation acts as a thrust-block, as an anchorage against frost-heave and eliminates washouts from waste-water drain.

Courtesy of Johns-Manville Sales Corp.

Figure 18. Fire Hydrant Foundation

PVC fittings may be supported with properly compacted bedding. Some fittings in pressurized systems require reaction or thrust blocking to prevent movement due to longitudinal line thrust.

7-5. Reaction or Thrust Blocking

Water under pressure exerts thrust forces in piping systems. Thrust blocking should be provided as necessary to prevent movement of pipe or appurtenances in response to thrust. Thrust blocking is required whenever the pipeline

- Changes direction (for example, tees, bends, elbows, and crosses),
- Changes size such as at reducers,
- Stops such as at dead ends, or
- Connects to valves and hydrants, at which thrust develops when closed.

Size and type of thrust blocking depends on

- Maximum system operating pressure or test pressure,
- Pipe size,
- Appurtenance size,
- Type of fitting or appurtenance,
- Line profile (for example, horizontal or vertical bends), and
- Soil strength.

Figure 19 displays standard types of thrust blocking used in pressurized water systems. Table 19 shows the approximate thrust developed at fittings and appurtenances for each 100 psi (0.69 MPa) of either test or operating pressure. Thrusts from greater or lesser pressures may be proportioned accordingly.

There are numerous design methods and nomographs available for sizing thrust blocks. One method used assumes soil-bearing values. Table 20 gives approximate

Table 19

Thrust Developed per 100 psi Pressure, *lb force* (*N*)

Pipe Size *in.* (*mm*)	Fitting 90-deg Elbow	Fitting 45-deg Elbow	Valves, Tees Dead Ends
4 (100 mm)	1,800 (8,007)	1,100 (4,893)	1,300 (5,783)
6 (150 mm)	4,000 (17,793)	2,300 (10,231)	2,900 (12,900)
8 (200 mm)	7,200 (32,027)	4,100 (18,238)	5,100 (22,686)
10 (250 mm)	11,200 (49,820)	6,300 (28,024)	7,900 (35,141)
12 (300 mm)	16,000 (71,172)	9,100 (40,479)	11,300 (50,265)

Table 20

Estimated Bearing Load

Soil Type	*lb/sq ft*	*N/m²*
Muck, peat, etc.	0	0
Soft clay	500	23,940
Sand	1,000	47,881
Sand and gravel	1,500	71,821
Sand and gravel with clay	2,000	95,761
Sand and gravel cemented with clay	4,000	191,523
Hard pan	5,000	239,403

allowable bearing load for various types of soil. The bearing loads are estimated for horizontal thrusts when depth of saturated soil cover exceeds 2 ft (0.6 m). It is emphasized that safe bearing loads in project soils must be established in system design. When doubt exists, soil-bearing tests should be conducted.

If thrust block design has not been specified by the project engineer, the design of thrust blocking can be calculated using Tables 19 and 20 and Figure 19, as shown in the following example. The selection of thrust block also can be made with the widely used nomograph given in Figure 20.

Example: Determine the design of thrust block required at an 8-in. 90-deg elbow. Maximum test pressure equals 200 psi; soil type is sand.

(1) Calculate thrust: From Table 19, thrust on 8-in. 90-deg elbow equals 7200 lb per 100 psi operating pressure.

$$\text{Total thrust} = 2(7200) = 14{,}400 \text{ lbs}$$

(2) Calculate thrust block size: From Table 20, safe bearing load for sand equals 1000 lb/sq ft.

$$\text{Total Thrust Support Area} = \frac{14{,}400}{1000} = 14.4 \text{ sq ft}$$

(3) Select type of thrust block: From Figure 19, select type 3.

Thrusts also can be effectively resisted by commercially available joint clamps or designed tie rod and clamp systems. It should be noted that clamps and tie rods may require corrosion protection.

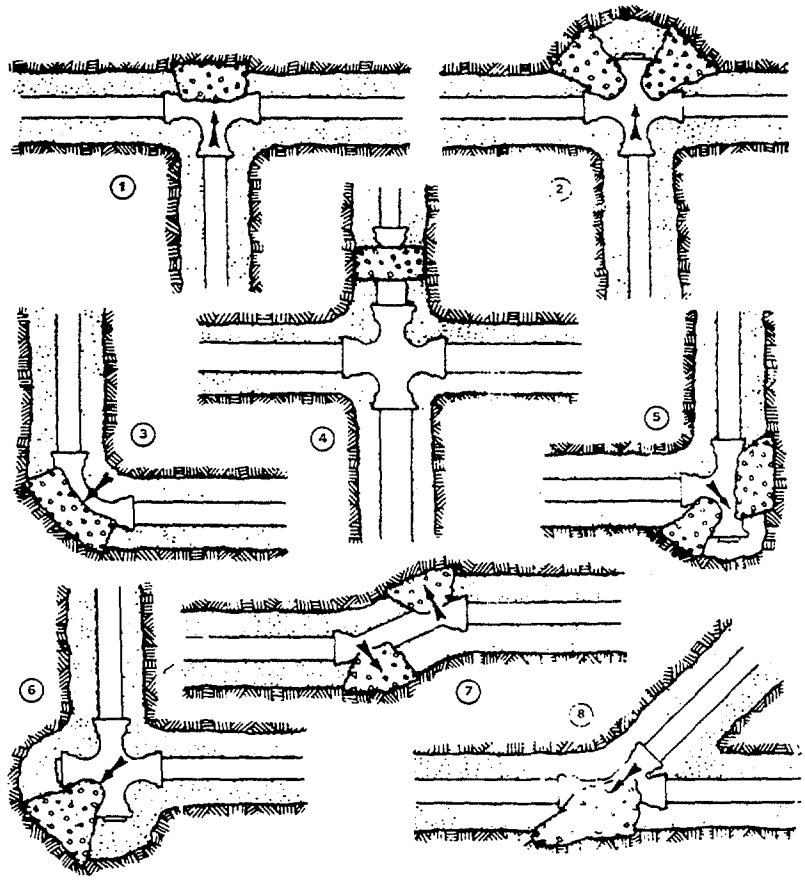

If thrusts, due to high pressure, are expected, anchor valves as below. At vertical bends, anchor to resist outward thrusts.

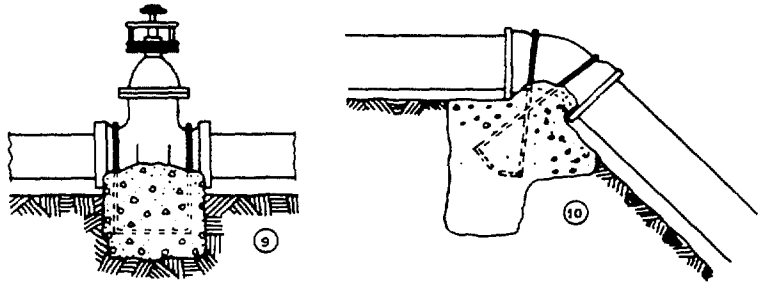

1. *Thru line connection, tee*
2. *Thru line connection, cross used as tee*
3. *Direction change, elbow*
4. *Change line size, reducer*
5. *Direction change, tee used as elbow*
6. *Direction change, cross used as elbow*
7. *Direction change*
8. *Thru line connection, wye*
9. *Valve anchor*
10. *Direction change vertical, bend anchor*

Courtesy of Johns-Manville Sales Corp.

Figure 19. Types of Thrust Blocking

147

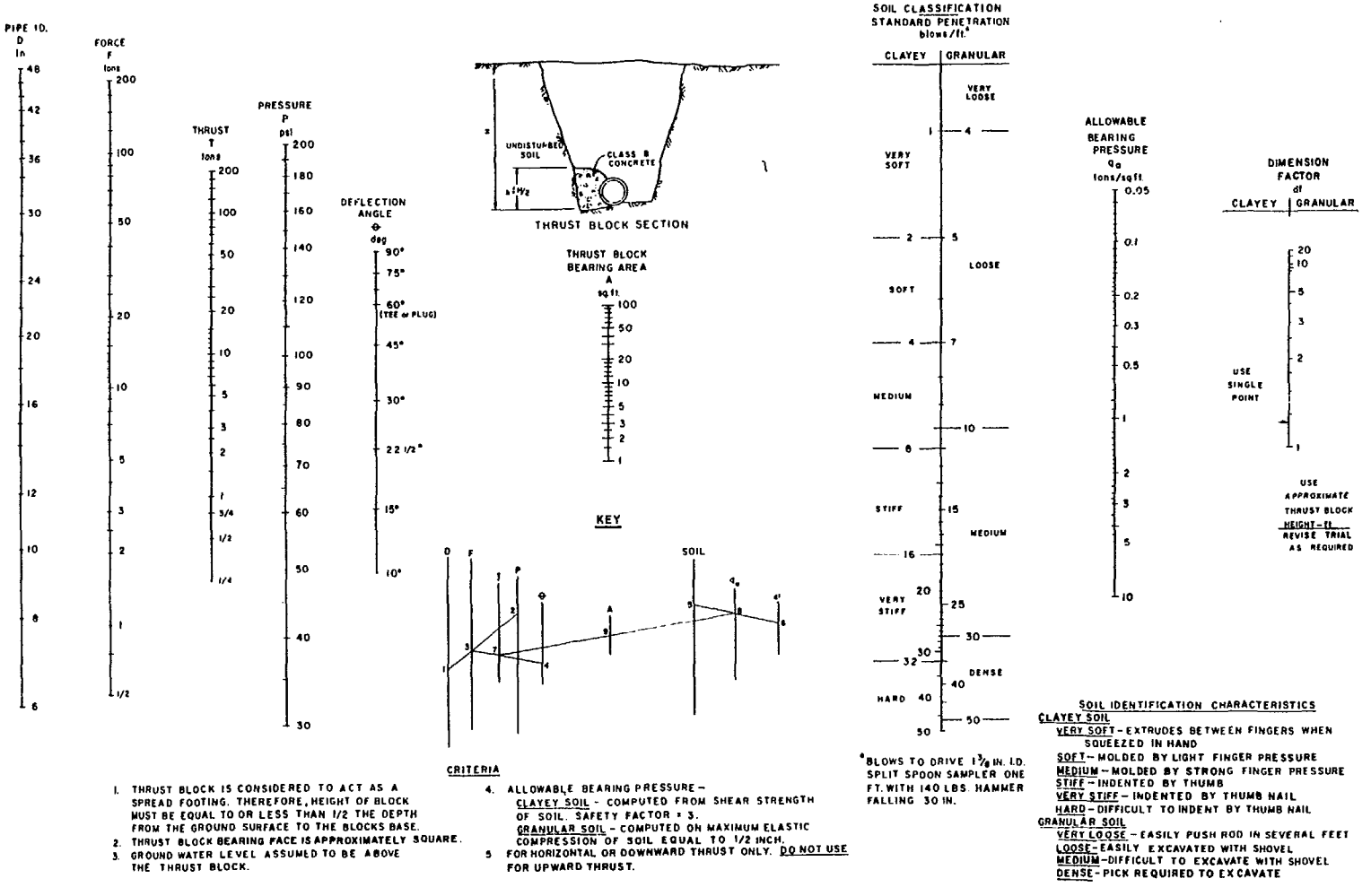

CRITERIA

1. THRUST BLOCK IS CONSIDERED TO ACT AS A SPREAD FOOTING. THEREFORE, HEIGHT OF BLOCK MUST BE EQUAL TO OR LESS THAN 1/2 THE DEPTH FROM THE GROUND SURFACE TO THE BLOCKS BASE.
2. THRUST BLOCK BEARING FACE IS APPROXIMATELY SQUARE.
3. GROUND WATER LEVEL ASSUMED TO BE ABOVE THE THRUST BLOCK.
4. ALLOWABLE BEARING PRESSURE – CLAYEY SOIL - COMPUTED FROM SHEAR STRENGTH OF SOIL. SAFETY FACTOR = 3. GRANULAR SOIL - COMPUTED ON MAXIMUM ELASTIC COMPRESSION OF SOIL EQUAL TO 1/2 INCH.
5. FOR HORIZONTAL OR DOWNWARD THRUST ONLY. DO NOT USE FOR UPWARD THRUST.

*BLOWS TO DRIVE 1 3/8 IN. I.D. SPLIT SPOON SAMPLER ONE FT. WITH 140 LBS. HAMMER FALLING 30 IN.

SOIL IDENTIFICATION CHARACTERISTICS

CLAYEY SOIL
- VERY SOFT – EXTRUDES BETWEEN FINGERS WHEN SQUEEZED IN HAND
- SOFT – MOLDED BY LIGHT FINGER PRESSURE
- MEDIUM – MOLDED BY STRONG FINGER PRESSURE
- STIFF – INDENTED BY THUMB
- VERY STIFF – INDENTED BY THUMB NAIL
- HARD – DIFFICULT TO INDENT BY THUMB NAIL

GRANULAR SOIL
- VERY LOOSE – EASILY PUSH ROD IN SEVERAL FEET
- LOOSE – EASILY EXCAVATED WITH SHOVEL
- MEDIUM – DIFFICULT TO EXCAVATE WITH SHOVEL
- DENSE – PICK REQUIRED TO EXCAVATE

Source: Morrison, E.B. Nomographs for the Design of Thrust Blocks. *Civil Eng.*, 39:6:50 (June 1969).

Figure 20. Thrust Block Nomograph

Chapter 8

Testing and Maintenance

This chapter contains testing procedures for leakage and pressure, procedures required for disinfection before PVC potable water piping is placed in service, and procedures for thawing and locating installed PVC piping.

8-1. Testing and Disinfection

To prevent floating of the pipe, sufficient backfill should be placed prior to filling pipe with water and subsequent field testing. Where local conditions require that the trenches be backfilled immediately after the pipe has been laid, the testing may be carried out after backfilling has been completed, but before placement of permanent surface.

At least seven days should elapse after the last concrete thrust or reaction blocking has been cast with normal (Type I) portland cement. The elapsed time may be reduced to three days with the use of a high-early-strength (Type III) portland cement. It is suggested that testing be conducted first on short lengths of installed pipe line, thereby permitting the installer to verify that proper installation and joint assembly techniques have been employed.

Filling, Drainage, and Air Relief of Mains

Water mains should be drained through drainage branches or blowoffs. Drainage branches and blowoffs should be provided with valves and should be located at low points and dead ends. Drainage branches or blowoffs must not be connected to any sewer, submerged in any stream, or be installed in any other manner that can permit back siphonage into the distribution system. Permanent air vents should be installed at all high points. If permanent air vents are not required at all high points, the installer should install corporation cocks at all such points to

expel air during initial filling and pressure testing of the lines. Lines should be filled slowly with maximum velocity of 2 fps (0.6 m/s), preferably 1 fps (0.3 m/s), while venting all air. After filling, lines should be flushed at hydrants, blowoffs, and dead ends at minimum velocity of 2.5 fps (0.8 m/s). Valves should be closed very slowly to prevent surges.

Procedure

The following procedure is based on the assumption that the pressure and leakage tests will be performed at the same time. Separate tests may be made if desired, in which case the pressure test should be performed first. The specified test pressure should be applied by means of a pump connected to the pipe. The test pressure should be maintained (by additional pumping if necessary) for the specified time. While the line is under pressure, the system and all exposed pipe, fittings, valves, and hydrants should be carefully examined for leakage. All defective elements should be repaired or replaced and the test repeated until all visible leakage has been stopped and the allowable leakage requirements have been met.

Test Method

The installer may perform simultaneous pressure and leakage tests, or he may perform separate pressure and leakage tests on the installed system at test durations and pressures specified in Table 21.

Allowable Leakage

The duration of each leakage test should be 2 hr, unless otherwise specified, and during the test the main should be subjected to the pressure required in Table 22. Leakage should be defined as the quantity of water that must be supplied into the newly laid pipe, or any valved section thereof, to maintain pressure within 5 psi (12.7 kPa) of the specified leakage test pressure after the pipe has been filled with water and the air in the pipeline has been expelled. No installation should be accepted if the leakage is greater than that determined by the following formula:

$$L = \frac{ND\sqrt{P}}{7400} \qquad \textit{Eq 50}$$

Where:
L = allowable leakage, gph
N = number of joints in the length of pipeline tested
D = nominal diameter of the pipe, in.
P = average test pressure during the leakage test, psig

Leakage values determined by the above formula are to be found in Table 22.

Disinfection

All PVC potable water piping should be disinfected and bacteriologically tested prior to use in accordance with AWWA Standard C601.

Table 21

System Test Methods

Procedure	Pressure	Test Duration
Simultaneous pressure and leakage tests	150% of working pressure at point of test, but not less than 125% of normal working pressure at highest elevation	2 hr
Separate pressure test	150% of working pressure at point of test, but not less than 125% of normal working pressure at highest elevation	1 hr
Separate leakage test	150% of normal average working pressure of segment tested	2 hr

Source: Recommended Standard for the Installation of Polyvinyl Chloride (PVC) Pressure Pipe, UNI-B-3, Uni-Bell Plastic Pipe Association.

Table 22

Allowable Leakage for AWWA PVC Pipe

Nominal Pipe Size *in.*	Average Test Pressure in Line, *psi* 50	100	150	200	250
	Allowable Leakage Per 1000 Ft or 50 Joints, *gal/hr (L/hr)*				
4	.19 (.72)	.27 (1.02)	.33 (1.25)	.38 (1.44)	.43 (1.63)
6	.29 (1.10)	.41 (1.55)	.50 (1.89)	.57 (2.16)	.64 (2.42)
8	.38 (1.44)	.54 (2.04)	.66 (2.50)	.76 (2.88)	.85 (3.22)
10	.48 (1.82)	.68 (2.57)	.83 (3.14)	.96 (3.63)	1.07 (4.05)
12	.57 (2.16)	.81 (3.07)	.99 (3.75)	1.15 (4.35)	1.28 (4.84)

8-2. Maintenance

Thawing. Frozen PVC water lines may be thawed by hot-water or steam injection. Torches and other direct-heating devices should not be used to thaw frozen lines.

Locating. The high dielectric strength (insulating property) of PVC pipe prevents location of buried pipe with electric current type metal detectors unless a tracer has been buried with the pipe during installation. If location during maintenance and future construction is to be accomplished using these types of detectors, a low-cost inductive or conductive tracer should be buried with the pipe (for example, metallic ribbon or low-cost metal wire). Location also may be accomplished using buried pipe detection apparatus designed to locate nonmetallic buried pipe lines (such as asbestos-cement and plastic). Such devices operate in a manner similar to a simple seismograph and have proven to be effective. Probing with metal bars is not recommended.

Chapter 9

Service Connections

Service connections vary in size from small services supplying individual homes to large outlets for industrial users. Service lines are connected to PVC water mains using the following methods:

- Tapping through service clamps or saddles,
- Tapping sleeves and valves for larger service connections, and
- Direct tapping (AWWA C900 PC 150 and PC 200 only, 3/4- and 1-in. corporation stops).

Service Clamps or Saddles

Service connections may be made using a service clamp or saddle. Maximum outlet size recommended with service clamps or saddles is 2 in. (50 mm). When making this type of connection with the line under pressure, equipment is used which attaches to the corporation stop and permits a cutting tool to be fed through the corporation stop to cut a hole in the pipe. Cutting tools should be sharp and should not apply excessive pressure. No threading of the pipe wall is required since the corporation stop is threaded into the service clamp. Service clamps or saddles used with PVC water pipe should

- Provide full support around the circumference of the pipe, and
- Provide a bearing area of sufficient width along the axis of the pipe, 2 in. (50 mm) minimum, ensuring that the pipe will not be distorted when the saddle is tightened.

Service clamps should not

- Have lugs that will dig into the pipe when the saddle is tightened,
- Have a **U**-bolt type of strap that does not provide sufficient bearing area, or
- Have a clamping arrangement that is not fully contoured to the outside diameter of the pipe.

A number of tapping machines are available that will drill through a corporation stop. It is important that the cutting tool be a shell-type cutter (hole cutter) that will retain the coupon and that is designed to accommodate walls as heavy as DR 14 (Pressure Class 200, AWWA C900). Many shell cutters are designed only for thin walled PVC; they do not have sufficient throat depth to handle the heavier walled pipe.

Service clamps and saddles should be installed in accordance with manufacturer's recommendations.

Tapping Sleeves and Valves

Tapping sleeves and valves are used when service connections larger than 2 in. (50 mm) must be made in PVC water main. Tapping sleeves may be used for making large taps under pressure.

When tapping sleeves are ordered from the manufacturer, the outside diameter of the pipe being tapped, the size of the outlet desired, and the working pressure should be specified to ensure that the sleeve furnished will be satisfactory. Lead-joint sleeves should not be used.

Tapping sleeves should be assembled in accordance with the manufacturer's directions. Drilling equipment can be purchased or rented from sleeve manufacturers, who will also furnish instructions and/or instructors trained in making such taps. (Contractors who specialize in this type of work are also available in some areas.)

Tapping sleeves should be well-supported independently from the pipe during the tapping. Support used should be left in place after tapping. Thrust blocks should be used as with any other fitting or appurtenance.

Table 23 lists recommended minimum lengths of tapping sleeves for the various main and tap sizes for AWWA PVC pressure pipe.

Table 23

Minimum Tapping Sleeve Length

Main & Tap (*in.* nominal)	Minimum Laying Length *in.*	*mm*
4 x 2, 4 x 3, 4 x 4	16	406
6 x 2, 6 x 3, 6 x 4, 6 x 6	18	457
8 x 2, 8 x 3, 8 x 4, 8 x 6	19	483
8 x 8	21	533
10 x 2, 10 x 3, 10 x 4, 10 x 6	19	483
10 x 8, 10 x 10	23	584
12 x 2, 12 x 3, 12 x 5, 12 x 6	19	483
12 x 8	21	533
12 x 10, 12 x 12	25	635

Direct Tapping

For some sizes of AWWA C900 PVC pipe, service connections may be made by the direct tapping of pipe wall and the insertion of a corporation stop. PVC pipe manufactured in accordance with AWWA C900 in nominal sizes 6–12 in. (150–300 mm), Pressure Classes 150 and 200, is being successfully direct tapped in the field. For 4 in. (100 mm) nominal size, Pressure Class 150 and 200, and for all sizes in Pressure Class 100, service clamps or saddles should be used. In direct tapping, proper use of specified direct tapping equipment, corporation stops, polytetrafluoroethylene (for example, Teflon®) thread sealant tape, and a torque wrench is recommended. Do *not* use liquid thread sealants. This procedure should be used with proper direction and instructions from the manufacturer of the PVC pipe and the manufacturer of the direct tapping equipment.

Connecting Service Line

In common practice, service connections (service clamps, saddles, and direct taps) are installed with the outlet at an angle of 45 deg above horizontal. It is recommended that direct taps be placed on the horizontal (at springline) to minimize potential for breakage and, in cold climate regions, to prevent the service line from being appreciably closer to the ground surface than the water main. A bend, or "gooseneck," in the service line should always be provided to ensure flexibility and to accommodate the effects of load due to settlement, expansion, and/or contraction. Proper soil consolidation should be provided in the area of the service connection.

Appendices

Appendix A. Approximate Pipe Weights

Weight of Belled Pipe Lengths, Lb/20 ft length (Kg/6.1 m)
(Weights are approximate only and are for a guide in selection of handling equipment.)

Nominal Size, in.	*Pressure Class 100*	*Pressure Class 150*	*Pressure Class 200*
4	37 (17)	51 (23)	64 (29)
6	77 (35)	105 (48)	132 (60)
8	132 (60)	180 (82)	227 (103)
10	199 (90)	271 (123)	342 (155)
12	281 (128)	383 (174)	484 (220)

NOTE: The above approximate weights per 20-ft length of pipe are calculated on cast iron (CI) equivalent OD dimensions. Pipe with steel pipe (IPS) equivalent OD dimensions will be slightly less.

Appendix B. Notes to the Engineer and Owner

In specifying a total project, it is necessary that the following items be considered in the special conditions of the contract documents.

1. Special provisions for excavation and trenching requirements. Special excavation provisions—open trench, sheeting, trench width, sheeting removal.
2. Special provisions for conflicting utilities and responsibility for their location, relocation, and repair.
3. Removal and replacement of roadways, pavements, and other improved surfaces and surface features.
4. List of materials to be furnished by owner.
5. Special trench foundations.
6. Special trench backfill.
7. Special provisions for testing, including responsibility for furnishing and conveying water for testing and disinfection. Responsibility for furnishing of equipment for testing. Required records and inspection of test. Stipulated design system operating pressure and required test pressure.
8. Enumeration of applicable plans, drawings, specifications, and other contract documents.
9. Special provisions for method of disinfection.

APPENDIX A

AWWA Guideline Criteria for Design and Installation of PE Water Pipe and Tubing in Sizes 1/2 In. Through 3 In.

This appendix is for information only and is not a part of AWWA C901.

SECTION A.1: PIPE SELECTION

Sec. A.1.1 Selection of Pressure Class

A minimum pressure class of 160 psi is recommended for general durability in handling and for use in typical AWWA water service installations. Lesser pressure classes may be appropriate for specific applications, but selection should be based on detailed evaluation of factors, such as installation configuration (Sec. A.4.3), fitting type, joining methods, use of coiled or straight products, and potential for significant surge pressure.

The minimum pressure class of the pipe or tubing selected should be equal to or greater than the system working pressure. The sum of the system working pressure and surge pressure should not exceed 1.25 times the pressure class of the pipe or tubing. If surge pressures govern the selection of the pressure class, consideration should be given to removal of the cause of surge pressures or to the incorporation of surge suppressors in the system.

Sec. A.1.2 Calculation of Surge Pressure

Surge pressure generated by velocity changes in a PE service line may be estimated by use of the formulas provided in this section. In addition, surges occurring either upstream in the mains or downstream in a user's plumbing system should be considered for their effect on the service line. The magnitude of surge pressures in mains made of material other than PE may be estimated using equations similar to those given here for PE pipe. Surge, or water hammer, problems are complex; their solution requires specialized knowledge.

The wave velocity and surge pressure that result from abrupt changes in the velocity of a column of water moving through a restrained pipe of uniform material and dimensions may be calculated using the following formulas:

$$a = \frac{4675}{\left[1 + \frac{K(\mathrm{DR} - 2)}{E}\right]^{1/2}} = \frac{4675}{\left[1 + \frac{K(\mathrm{IDR})}{E}\right]^{1/2}} \qquad \text{(Eq A.1)}$$

156

$$P_s = \frac{aV}{2.31\,g} \qquad \text{(Eq A.2)}$$

Where:

a = wave velocity, in feet per second
K = bulk modulus of water = 294,000 lb/in.^{2}
DR = dimension ratio, outside-diameter basis (Sec. 1.2.6)
E = modulus of elasticity of pipe material, in pounds per square inch.
E varies by material used, as follows:
For PE 2406, E = 80,000 psi
For PE 3406, E = 115,000 psi
For PE 3408, E = 115,000 psi
IDR = dimension ratio of pipe, inside-diameter basis (Sec. 1.2.7)
P_s = surge pressure, in pounds per square inch gauge
V = velocity change, in feet per second, occurring within the critical time $2L/a$
Where:
L = pipe length, in feet
g = gravitational acceleration = 32.2 ft /s/s

Table A.1 shows surge pressures resulting from an instantaneous change in velocity of 1 ft /s, as calculated from the above equations.

Table A.1 Calculated Surge Pressures for an Instantaneous Change in Velocity of 1 ft/s in PE Pipe or Tubing

Dimension Ratios		Surge Pressures
OD Based (DR)	ID Based (IDR)	*psi*
21.0	19.0	8.3
17.0	15.0	9.3
13.5	11.5	10.6
11.0	9.0	12.0
9.0	7.0	13.5
7.3	5.3	15.4

Sec. A.1.3 Temperature Effects

The pressure classes of pipe and tubing in AWWA C901 are based on water temperatures of 73.4°F (23°C). Polyethylene piping intended for use where service temperatures may exceed this value for prolonged periods should have a hydrostatic design basis established for the specified temperature or higher. The elevated-temperature pressure class is calculated using either Eq 1 or Eq 2 (Sec. 1.2.13) and the elevated-temperature hydrostatic design basis or the interpolated elevated-temperature hydrostatic design basis in accordance with ASTM D2837.

167

SECTION A.2: DESIGN CRITERIA

Sec. A.2.1 Hydrostatic Design Basis

Hydrostatic design basis values for a temperature of 73.4°F (23°C) for the materials covered in this standard are given in Table A.2.

Sec. A.2.2 Hydrostatic Design Stress

For PE materials covered by this standard, the values of the hydrostatic design stresses (hydrostatic design basis multiplied by the design factor, which, in this standard, is 0.5) are given in Table A.2. These values are for service temperatures of 73.4°F (23°C) and should be modified for higher service temperatures (see Sec. A.1.3).

Table A.2 Hydrostatic Design Basis and Hydrostatic Design Stress for PE Pipe and Tubing

Standard PE Code	Hydrostatic Design Basis at 73.4°F (23°C) *psi*	Hydrostatic Design Stress at 73.4°F (23°C) *psi*
PE 2406	1250	630
PE 3406	1250	630
PE 3408	1600	800

Sec. A.2.3 Design Factor

Because the strength of PE materials depends on the duration of application of loading, the effective safety factor that corresponds to a design factor of 0.5 will vary with actual end-use conditions. For the PE materials covered by this standard, the effective safety factor under hydrostatic pressure ranges from at least 3 for short-term loading to approximately 2 for long-term (100,000 h) sustained loading at the maximum recommended system working pressure and service temperature. The design factor is also intended to account for unknown local effects, such as ovalling and longitudinal bending, that occur in properly installed buried pipe.

SECTION A.3: EXTERNAL LOADS

Sec. A.3.1 Earth Loads

For properly installed small-diameter conduit, the effects of distributed earth loads can usually be disregarded.

Sec. A.3.2 Live Loads

Tubing or pipe should be installed to preclude construction loads and subsequent traffic loads. If the installation is to be subjected to surface traffic, a minimum cover of 24 in. should be provided, and trench backfill in the pipe zone should be compacted to at least 90 percent of the laboratory maximum density of the backfill soil as determined in accordance with ASTM D698.

Sec. A.3.3 Concentrated Loads

Pipe and tubing installations should be designed and constructed to preclude localized concentrated loadings such as point contact with stones; the effects of differential earth settlement, particularly at points of connection with rigidly anchored fittings; and excessive bending due to installation configuration, especially at fittings.

SECTION A.4: INSTALLATION

Sec. A.4.1 Storage and Handling

Polyethylene pipe, tubing, and fittings should be stored in a way that prevents damage due to crushing or piercing, excessive heat, harmful chemicals, or exposure to sunlight for prolonged periods. The manufacturer's recommendations regarding storage should be followed.

Polyethylene is not subject to breakage during normal handling. However, it is subject to damage by hard objects with a cutting edge. Therefore, handling operations and trench installation and backfill should be performed with reasonable care to prevent scratches, nicks, and gouges in the conduit.

Practices such as dragging coils of pipe or tubing over rough ground and installing by pulling through auger or bore holes containing sharp-edged material should be avoided to prevent damage by excessive abrasion and cutting. Uncoiling and other handling should be done without kinking. If pipe is excessively cut (to a depth greater than 10 percent of its wall thickness) or kinked, the damaged portion should be removed, discarded, and replaced.

Sec. A.4.2 Bending

Bends in PE pipe and tubing should not be permitted to occur closer than 10 diameters from any fitting or valve. The recommended minimum radius of curvature is 30 diameters, or the coil radius when bending with the coil. Furthermore, bending of coiled pipe against the coil should not go beyond straight. Polyethylene pipe or tubing that becomes kinked during handling or installation should not be used, and care should be taken to ensure that kinking does not develop after installation.

Sec. A.4.3 Joining Methods and Fittings

The use of fittings that are not covered by a recognized standard is subject to the judgment and discretion of the purchaser. Each such fitting should be qualified before use by investigation and by tests when necessary to determine that the fitting is suitable and safe for the intended service.

Polyethylene pipe or tubing can be joined to other PE pipe or fittings or to pipe or appurtenances of other materials using one or more joining systems. The purchaser should verify with the pipe and fittings manufacturer that fittings are capable of restraining PE pipe or tubing from pullout, especially for larger-diameter products with thicker walls. Pressure classes for pipe and fittings should be the same or compatible. Further information and specific procedures may be obtained from the pipe and fittings manufacturers.

A.4.3.1 *Insert fittings.* Insert fittings are available for PE pipe in a variety of styles, including couplings, tees, ells, and adapters. Pipe ends should be prepared for such fittings by cutting the pipe square using a cutter designed for cutting plastic

pipe. Two all-stainless-steel clamps are slipped over the end of the pipe. The end of the pipe is forced over the barbs of the fitting until it makes contact with the shoulder of the fitting. (The end of the pipe may be softened by immersing in hot water to permit the pipe to slip on more easily.) The clamps are then tightened to provide a leak-tight connection. Care should be taken to see that the clamp screw positions are offset approximately 180°.

For PE pipe products in pressure classes of 160 psi or greater and with diameters of 1 1/2 in. or larger, special, heavy-duty tightening clamps that can develop the necessary pipe-tightening force to preclude pullout from insert fittings should be used. The pipe should be softened by immersing in hot water to facilitate a tight seal around the insert under the compressive force of the clamp. Only metal insert fittings that can resist creep deformation, which may lead to loss of seal and reduction of joint pull-out resistance, should be used. To ensure that such joints have been properly made, the joints should be pressure tested before being covered. When joining such heavier wall pipe, the use of alternate techniques, such as heat fusion and specially designed mechanical fittings, should be considered.

A.4.3.2 *Flared fittings.* Recommendations for flaring are contained in ASTM D3140. Flared fittings should be used only on recommendation of the pipe manufacturer.

A.4.3.3 *Mechanical fittings.* Mechanical fittings provide either a pressure seal alone or a pressure seal and varying degrees of resistance to pullout, including those that hold beyond the tensile yield of the PE pipe. Mechanical fittings may require tightening of a compression nut, tightening of bolts, or merely inserting properly prepared pipe or tubing to the proper stab depth in the fitting. Pipe and fitting manufacturers' recommendations for installation should be followed.

Internal stiffeners that extend beyond the clamp or coupling nut should not be used. It is recommended that a solid tubular metal stiffener be used. The pipe should be cut square using a cutter designed for cutting plastic pipe. It is further recommended that the outside ends of the pipe be chamfered to remove sharp edges that could gouge or cut the gasket when being installed. Chamfering or bevelling is a part of the recommended installation procedure for stab fittings.

A.4.3.4 *Heat-fusion connections.* Joints can be made either pipe end to pipe end, pipe end to fitting, or between a saddle fitting and pipe by heat-fusion methods. These methods involve preparation of surfaces, heating of the surfaces to proper fusion temperatures, and bringing the surfaces together in a prescribed manner to effect the fusion bond. ASTM D2657 describes the heat-joining practice.

Special tools to provide proper heat and alignment are required for heat-fusion connections. These are available from several equipment manufacturers, who can also provide joining procedures. Detailed written procedures and visual aids that can be used to train personnel are available from various pipe and fittings manufacturers. Specific recommendations for time, temperature, and pressure must be obtained from the pipe and fittings suppliers.

Sec. A.4.4 Embedment of Pipe and Tubing

In underground installations, the PE pipe and tubing should be installed in trench bottoms that provide continuous support and are uniform and free from rocks, stones, and debris (see ASTM D2774). The initial backfill, from 3 in. below the pipeline to 4–6 in. above the pipe, should be sand or other materials, as allowed in ASTM D2774. In order to prevent freezing in the water lines, the pipe should be installed below the frost line.

Sec. A.4.5 Testing

The installation should be tested for leakage in accordance with the applicable code or engineering standard prior to acceptance by the owner.

SECTION A.5: WATER SYSTEM DISINFECTION

Polyethylene pipe and tubing should be disinfected in accordance with AWWA C651-86, Standard for Disinfecting Water Mains.

SECTION A.6: SQUEEZE-OFF

The use of squeeze-off techniques for emergency shut-off should be performed only on materials, wall thicknesses, and pipe diameters and with tools and methods as recommended by the pipe manufacturer.

SECTION A.7: REFERENCES

The latest edition of the following documents are incorporated by reference in this appendix. They form a part of this appendix to the extent specified. In any case of conflict, the requirements of the appendix shall prevail. These references are provided for information only and are not a part of AWWA C901.

ASTM* D698—Standard Test Methods for Moisture-Density Relations of Soils and Soil-Aggregate Mixtures Using 5.5-lb (2.49-kg) Rammer and 12-in. (305-mm) Drop.

ASTM D2657—Standard Practice for Heat-Joining of Polyolefin Pipe and Fittings.

ASTM D2774—Standard Recommended Practice for Underground Installation of Thermoplastic Pressure Piping.

ASTM D2837—Standard Method for Obtaining Hydrostatic Design Basis for Thermoplastic Pipe Materials.

ASTM D3140—Standard Practice for Flaring Polyolefin Pipe and Tubing.

AWWA C651-86—Standard for Disinfecting Water Mains.

*American Society for Testing and Materials, 1916 Race St., Philadelphia, PA 19103.

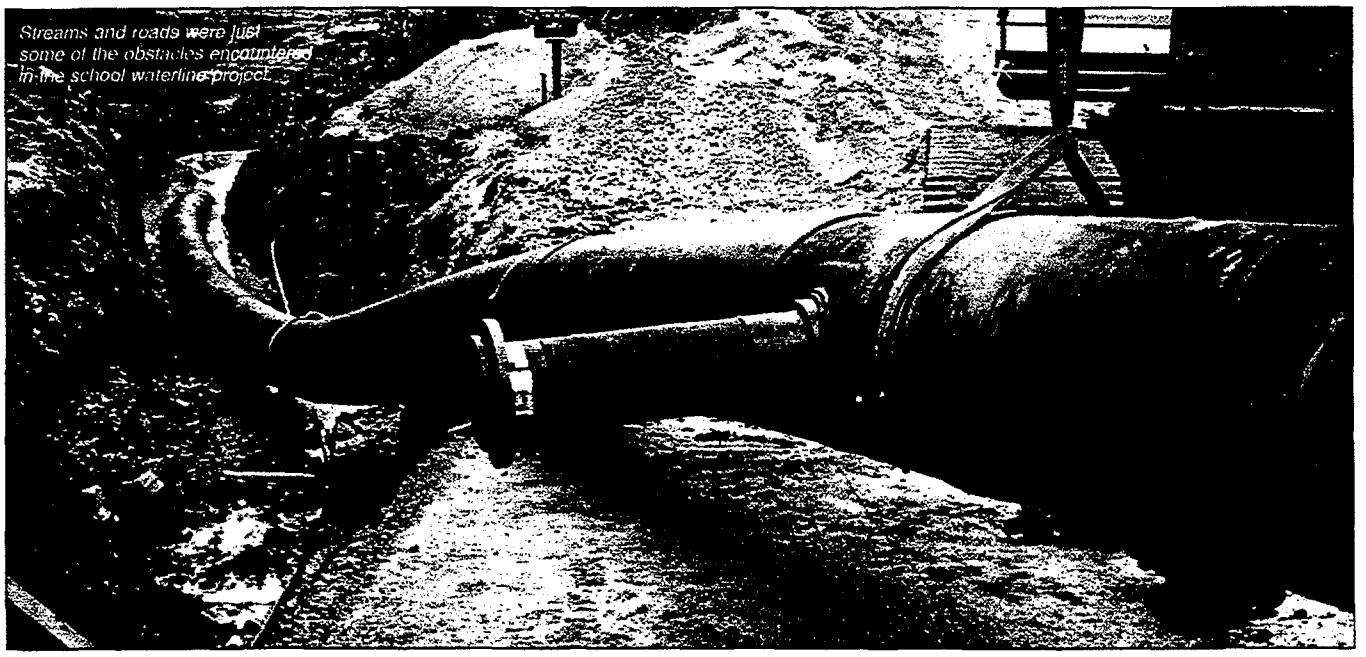

Streams and roads were just some of the obstacles encountered in the school waterline project.

Indianapolis Water Company Goes to School

by Jeff Peters, E.I.

As science and technology bring new products to market, we are faced with making choices between these new products and more familiar, traditionally used ones. We have to ask ourselves: where can these new products be used? Where should they be used? In the area of water lines, can these new systems replace existing traditional-type pipe systems with better results or increased long-term savings? Can these new products be further improved on?

Although polyethylene pipe has been around for close to 40 years, it has just recently been made available as an American Water Works Association-approved alternative piping material for the potable water industry. The American Water Works Association developed AWWA Standard, ANSI/AWWA C906-90, Polyethylene (PE) Pressure Pipe and Fitting, 4 in. through 63 in., for Water Distribution.

The Indianapolis Water Company (IWC) started using high density polyethylene (HDPE) in the fall of 1992 on directional boring applications. The results had been very good. Open trench, traditional installation methods were implemented later, also with good results.

In some HDPE pipe installations, IWC has realized that substantial dollar savings can be achieved through lower installation costs. These savings are the result of:

- Fewer fittings are needed because of the pipe's inherent flexibility.
- Thrust restraints are not needed because every joint is restrained.
- Unique pipe joining procedures and installation methods allow for shorter installation times and lower restoration costs.

Therefore, when IWC was asked by North Madison Elementary School to submit proposals to construct a water line to serve the school, it was no surprise HDPE was one of the pipe materials considered.

The school is set in a rural section of a neighboring county outside of Indianapolis. Wells that were currently serving the school had a history of problems. The school needed to obtain a safer, more dependable source of water by the start of the school year. After soliciting proposals in May of 1994, IWC was selected to extend a main three miles to the school from the closest point in IWC's distribution system.

Project Implementation

Time was going to be a factor throughout the duration of this project. Plan preparation, easement acquisition, material manufacture and deliv-

162

ery, and construction all had to be completed in 10 weeks in order to get water to the school by the time it opened in late August. When the school accepted IWC's proposal for 3.5 miles of 24 in. HDPE pipe, a working set of plans was almost ready for bidding. Since IWC had never installed HDPE pipe of this size before, several concerns needed to be addressed:

- Are thrust restraints required at bends or other fused fittings?
- How can large diameter taps (6 in. or larger) be made?
- How would the thermal expansion/contraction characteristics of polyethylene effect the project?
- How will polyethylene be joined to traditional materials like ductile iron?
- How can large diameter butterfly valves be incorporated in the IPS-sized HDPE pipe?

Working with Everett J. Prescott, Inc. (EJP) and a large U.S. polyethylene pipe manufacturer, PLEXCO Performance Pipe Division - Chevron Chemical Company, Bensenville, IL, we were able to work out these types of constructability questions and move on.

Because over 15,000 ft of 24 in. SDR 13.5 (rated with a continuous working pressure of 125 psi) pipe needed to be manufactured in less than 25 days, all parties needed to work together to meet the demanding deadline for this project. The task of manufacturing and shipping all the required pipe and fittings was accomplished by the four week delivery deadline.

Construction

Invitations to construction bidders were sent out on June 28 and due back by July 5. The scheduled start of construction was July 11. This meant the successful bidding contractor had seven days, including the 4th of July weekend, to prepare a competitive bid. Then they had six more days to mobilize equipment and manpower to the project site after notification of being the successful bidder. Bowen Engineering Corp., Fishers, Ind., was hired for the project and entrusted to meet these deadlines.

Pipe began arriving at the job site on July 11. Twenty-one semi-truck loads, 816 ft of pipe at a time. came

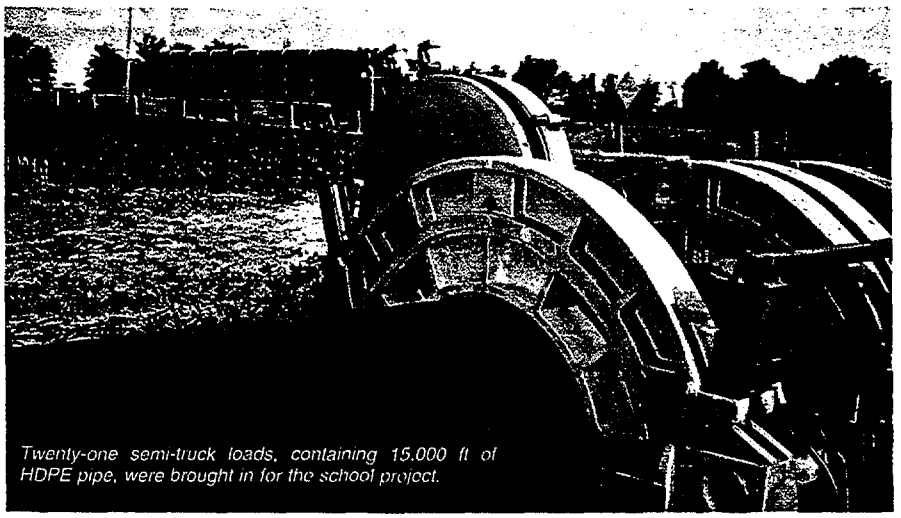

Twenty-one semi-truck loads, containing 15,000 ft of HDPE pipe, were brought in for the school project.

pouring in over the next two weeks. Bowen unloaded the 51 ft long pieces of pipe at four staging areas along the project route by using a front-end loader equipped with lifting forks.

On July 18, Bowen began fusing pipe above ground with the help of PLEXCO field service representative Gary Breazeale. Each joint, from the time the pipe was placed into the fusion machine, faced off, heated, joined under pressure, allowed to cool, and removed, took approximately 45 minutes. Bowen was given a rule of thumb of two minutes fusion time for every inch of pipe diameter to make an acceptable joint.

After a week of fusing pipe, several 500 ft runs of pipe were ready to be joined together and installed. Without any underground obstructions, Bowen was able to install 4,000 ft of pipe in just the first week.

With the production rate achieved in the first week of construction, a feeling of confidence was beginning to spread at the project site. However, the easy part was done. What lay ahead was a race against time. There were five streams to cross, 2,500 ft of heavily wooded terrain to clear and excavate, four asphalt paved county roads to open cut and cross, and 7,500 ft of residential area with over 40 homes to pass in front of.

With only four weeks left before school opened, IWC asked Bowen to throw everything they could at this project to try to meet the completion date. An additional crew was brought in and Bowen began working 10 hr days, seven days a week.

Three days before the start of school, it was apparent that our deadline would not be achieved. With a contingency plan in place to supply water to the school, construction continued uninterrupted. On August 25 (Friday of the first week of school), all the 24 in. HDPE pipe, hydrants, valves and fittings had been installed. The main was filled in eight hours and sterilization began at 6 a.m. on the following morning. Sun., August 27, the line was flushed and the first sample of water was sent to IWC's labs for testing. On Tues., August 29, after two successive successful water samples were taken, the main was placed in service. This was one week later than the original target date.

The successful completion of this project was achieved through the dedication of EJP, PLEXCO and Bowen Engineering, who illustrated what can be achieved in light of almost insurmountable odds.

Lessons

Much has been learned about HDPE pipe from this large project. Problems encountered have been resolved. We will continue to learn and develop methods and products that solve the problems we have today. The gas industry has already proven that this technology works. Adapting HDPE pipe systems to the water industry is the challenge that we are now stepping up to.

About the Author:
Jeff Peters is an Assistant Design Engineer with Indianapolis Water Company, Indianapolis, IN.

For more information on this subject, circle 911 on the reader service card.

165

SUMMARY OF KEY STANDARDS

FAIRFAX COUNTY

- WATER MAINS TO BE LOCATED 8 FEET NORTH OR EAST OF STREET CENTERLINE
- GAS MAINS TO OPPOSITE
- SEWER LINES WILL BE LOCATED WITHIN A FIVE FOOT RIGHT-OF-WAY ALONG THE STREET CENTERLINE
- WATER CUTOFFS (VALVES) SHALL BE LOCATED IN UTILITY STRIP BETWEEN CURB AND GUTTER.
- WATER SERVICE LINES SHALL BE CONSTRUCTED INTO LOT PRIOR TO SIDEWALK CONSTRUCTION
- ALL WATER MAINS SHALL HAVE A 4 FOOT COVER UNLESS OTHER WISE APPROVED
- NO UNDERGROUND ELECTRIC, TELEPHONE, TELEVISION OR OTHER UTILITIES SHALL BE INSTALLED IN THE PUBLIC WATER SUPPLY EASEMENT PARALLEL TO THE WATER MAIN
- PLANS AND PROFILES ARE REQUIRED FOR ALL UTILITY CROSSINGS
- MAINS 3" THROUGH 12" ARE TO BE DUCTILE IRON

- CORROSION PREVENTION AND CONTROL MEASURES ARE TO BE USED ON ALL BURIED UTILITY CROSSINGS

- CASING PIPE CROSSINGS (REQUIRED FOR MAJOR HIGHWAYS AND RAILROADS) ARE TO HAVE CATHODIC PROTECTION

- ADJACENT STORM AND SANITARY SEWERS ARE TO BE CONSTRUCTED AND ACCEPTED PRIOR TO WATER MAIN INSTALLATION

- SERVICE TO THREE OR MORE RESIDENCES REQUIRES A 3" MINIMUM LINE

- COMMERCIAL FACILITIES REQUIRING A FIRE LINE SHALL HAVE SEPARATE FIRE AND DOMESTIC SERVICE LINES

- MAINS SHALL BE INSTALLED IN TRAVEL AREAS WHERE POSSIBLE

- PROFILES ARE REQUIRED FOR ALL MAINS IN OPEN AREAS, AT ROAD CROSSINGS AND FOR ALL MAINS IN EXCESS OF 12 INCHES

- FIRE HYDRANTS REQUIRE A 6" MINIMUM MAIN

9-0300 PLATES

STANDARD DESIGNA-TION	PLATE NO.	DESCRIPTION	SECTION
FH-1	1-9	Location of Fire Hydrants	9-0103
FH-2	2-9	Standard Fire Hydrant Island Parking Areas	9-0103
FH-3	3-9	Standard Fire Hydrant Island Parking Areas	9-0103
FH-4	4-9	Standard Fire Hydrant Island Parking Areas	9-0103
FH-5	5-9	Fire Hydrant Protection in Area Where Island Cannot be Constructed	9-0103
FH-7	6-9	Fire Lanes	9-0202

9-0400 TABLES

STANDARD DESIGNA-TION	TABLE NO.	DESCRIPTION	SECTION
N/A	9.1	Fire Flow	9-0202.2F(1)
N/A	9.2	Fire Flow Coefficient	9-0202.2G(1)
N/A	9.3	Maximum Fire Flow	9-0202.2G(2)
N/A	9.4	Exposure Surcharges	9-0202.2G(6)
N/A	9.5	Occupancy Reductions	9-0202.2G(8)

9-0000 WATER AND FIRE REGULATIONS

9-0100 PUBLIC WATER SUPPLY

9-0101 General Requirements:

9-0101.1 A public water supply approved by the appropriate agencies shall be provided to serve subdivision lots of less than 20,000 ft^2 in size.

9-0101.2 Subdivisions containing 3 or more lots which are at least 20,000 ft^2 in size, but not greater than 74,999 ft^2 in size, shall be served by an approved public water supply.

9-0101.3 All extensions of public water supply systems required by § 9-0100 et seq. shall conform to the requirements established by § 70-1-13 of the Code and § 9-0200 et seq.

9-0101.4 In residential developments containing 20 or fewer lots which are 20,000 ft^2 in size or greater and in which the nearest boundary is located more than an average of 125' per lot[1] from the nearest existing water main:

9-0101.4A The County Executive may waive the requirements set forth in § 9-0101.2 & .3 and § 70-1-13 of the Code which requires that water capacity for fire flow comply with Insurance Services Office standards, and that water storage capacity of 30,000 gallons be provided.

9-0101.4B The County Executive may refuse to grant such a waiver if he determines from the plans and plats submitted to the County for approval that substantial development is anticipated for the areas surrounding the proposed development.

9-0101.4C Wherever such waiver is granted:

9-0101.4C(1) Either a central well water supply system, with all necessary water mains and facilities or individual wells and dry water mains with all necessary appurtenances, shall be installed as required by the approved water supply agency or the County; and

9-0101.4C(2) Requisite fire hydrants shall be furnished or payment equal to the value of said hydrants at time of waiver, and an installation fee therefore shall be paid to the approved water supply agency; provided, however, that where the County Executive determines that, based on the adopted Comprehensive Plan and capital improvements program of the County, the installation of a public water main within an average of 125' per lot[1] from the nearest boundary of the proposed development is not expected within the next 10 years, individual wells may be installed without providing dry water mains and fire hydrants.

9-0101.5 In residential developments with lots 75,000 ft^2 in size or greater, when the developer elects to install a central well water supply system with all necessary appurtenant water facilities, the requirements that water capacity for fire flow comply with Insurance Services Office standards, and that water storage capacity of 30,000 gallons need not be provided.

9-0101.6 All requests for the above waivers shall be submitted in writing to the appropriate Site Review Branch of DEM.

9-0102 Public Water Supply Agency Data

9-0102.1 Any person contemplating the construction of an extension of a water supply system shall, at the time of submitting subdivision plans, profiles and specifications, agree by written contract approved by the appropriate public water supply agency that, upon completion of the construction of

---

[1]Such footage shall be computed as follows: distance between nearest existing water main and nearest boundary of the proposed development divided by number of proposed lots shall equal more than 125'.

the extension of such water system and the approval and acceptance thereof by the proper official, the water system so constructed shall become the property of the appropriate public water supply agency.

9-0102.2 All water mains, their sizes, valves and fire hydrants, and their relationship to gas lines shall be shown as indicated below:

9-0102.2A In subdivision streets on tangent sections, the water main shall be located 8' north or east of the street centerline, and the gas main shall be located 8' south or west of the centerline.

9-0102.2B On loop streets the water main shall be located 8' north or east of the predominate centerline of the street. The gas main shall be located 8' south or west of the predominate centerline of the street. The water and gas mains shall then continue on the same side of the centerline as determined above for their entire length of the streets.

9-0102.2C Due to the complexity of design of townhouse streets, it is not feasible to specify the side of the street on which the water line should be located. Developers of townhouse sites shall confer with the public water supply agency and the Washington Gas Light Company. These agencies will assist the developers at this stage in effecting a satisfactory location for water and gas mains and eliminating the need for revisions to the finished drawings for the development.

9-0102.2D Water service cut-offs shall be located in the utility strip between the curb and gutter and sidewalk unless otherwise permitted by the Director. The water service line shall be constructed into the lot prior to the placing of any concrete sidewalk.

9-0102.2E Dry water mains shall be shown on the plans. House and other building connections must be stubbed to the property line before the street paving section is constructed.

9-0102.3 Guideline Criteria:

9-0102.3A All water main construction shall comply with the requirements of the standard specifications and plans of the public water supply agency serving the location.

9-0102.3B All water mains shall have a minimum cover of 4' unless otherwise designated.

9-0102.3C The developer shall request inspection by the public water supply agency 3 days prior to commencing construction of any water mains.

9-0102.3D No underground electric, telephone, television cable, gas, chilled water lines or any other underground utilities shall be installed within the public water supply easement parallel to the proposed water main. Plan and profiles of all utility crossings of water mains within the easements shall be submitted to the public water supply agency for approval prior to construction.

9-0102.3E Any relocation of existing water mains due to development shall be provided for by the developer.

9-0102.3F No water main valves are to be closed prior to notification of the appropriate water supply agency.

9-0102.3G Water mains shall not be installed on a site until easements are recorded and the developer has furnished proper forms for water main installation.

9-0102.3H All water mains 3" through 12" shall be Class 52, Ductile Iron Water Main unless otherwise designated.

9-0102.3I The developer is requested to submit unit prices for oversize water mains and appurtenances as shown on the plans for approval by FCWA prior to ordering materials or commencing construction of any oversize water mains.

9-0102.3I(1) Approval by FCWA will require a period of approximately 90 days.

9-0102.3I(2) This approval is contingent upon obtaining approval by the Fairfax County Planning Commission and, if necessary, by the Board under the provisions of § 15.1-456 of the Va. Code, as amended. Where applicable, a statement regarding this approval shall be shown on the plans.

9-0102.3J All hydrant, water service, fire line and stub-out valves shall be strapped. Swivel fittings are optional in lieu of strapping.

9-0102.3K The developer shall notify the public water supply agency prior to the installation of interior plumbing to determine the location of the water meter and any pre-wiring for remote register.

9-0102.3L When the property is located in areas where the pressure is less than 30 PSI, booster pumps shall be required to provide adequate pressure.

9-0102.3M The developer shall make provision for discharge of water as required by the public water supply agency for water meter repairs and testing with proper arrangements for E&S control during discharge.

9-0102.3N The working pressure shall be shown on the plans. In accordance with the VUSBC, a pressure regulating valve must be installed by the property owner in the building plumbing system where the working pressure exceeds 80 PSI in order to eliminate water hammer and unnecessary wastage of water.

9-0102.3O The approximate location of water meters shall be shown on the plans by symbol.

9-0102.3P All water meters above 1" shall be located inside in an accessible location and shall not be installed under existing piping or close to other facilities.

9-0102.3P(1) Meter installations shall be inspected, and the bypass valve, if required, shall be sealed by the appropriate public water authority.

9-0102.3P(2) The remote register shall be installed on the outside of the building.

9-0102.3P(3) The developer shall notify DEM, Public Utilities Branch, prior to the commencement of any construction or line testing.

9-0102.3Q The developer shall agree to assume complete responsibility and all costs for the installation of the mains and appurtenances and for any adjustments in alignment and grade, location, repairs, and maintenance which may be required prior to finish grading and surfacing of streets and/or easements and final acceptance of the facilities. Final acceptance shall not be considered until after the streets have been surfaced or the easements finally graded.

9-0102.3R Corrosion prevention and control measures shall be used to protect water mains when a water main crosses another buried utility line.

9-0102.3S Cathodic Protection of Casing Pipe.

9-0102.3S(1) Anodes need not be affixed to casing pipes that are not under the influence of impressed current from another source. Casings shall be filled with bluestone dust after the installation of the carrier pipe.

9-0102.3S(2) Casing pipe crossings of all railroads and interstate highways shall be protected by the installation of two 17 lb anodes, 1 to be installed at each end of the casing pipe.

9-0102.3S(3) Where construction excavations (boring portals) require the use of temporary restraining tie rods from the carrier pipe to the casing pipe during the testing operations, these tie rods shall be severed and bent away to prevent electrical continuity. These tie rods shall not be severed until installation of the required concrete blocking. However, if the tie rods cannot be removed, no additional cathodic protection shall be required to protect the casing pipe.

9-0102.3S(4) Anodes placed in rock shall be installed using the following procedures:

9-0102.3S(4)a Anodes shall be placed approximately 10' from the water main adjacent to the trench at a depth that can be dug without special blasting required for that purpose; or

9-0102.3S(4)b When rock is close to or at the ground surface, the anode shall be placed in the pipe trench at least to the depth of the crown of the pipe and can be laid horizontally.

9-0102.3T Prior to any water main installation all required sanitary sewers, including laterals, and storm sewers must be installed, their ditches compacted for full depth according to current requirements, the sanitary sewer accepted for service by DEM, and the streets and/or easements rough graded to meet current standards.

9-0102.4 Use of the public water supply as a source of water for temporary construction wash racks.

9-0102.4A All subdivision and site plans shall show the location in detail for a temporary wash rack for the cleaning of trucks and construction equipment leaving the site. The means by which water is provided and the area of temporary ponding for settling of water shall be shown. The public water supply may be used to provide wash water.

9-0102.4B If the extent of the site is so limited as not to warrant a wash rack, alternate provisions for cleaning shall be shown.

9-0102.5 Service Connections

9-0102.5A More than 2 pipestem lots shall require a 3" water main installation for water service.

9-0102.5B Water meters 1 1/2" and larger shall be located inside; a bypass is required for all 3" meters and above.

9-0102.5C Commercial development, office buildings, warehouses, churches, etc., that require a fire line to the building shall have separate fire and domestic lines for service.

9-0102.6 Design Guidelines

9-0102.6A When connecting to existing water mains, the locations of existing valves requiring operation shall be indicated on plans.

9-0102.6B Where feasible, loops to water mains should be considered.

9-0102.6C All water mains shall be installed in travel areas where possible. Profiles are required for all water mains in open areas, at road crossings and for all water mains 12" and larger.

9-0102.6D The separation between sanitary sewer mains and laterals and water mains shall be in accordance with the Commonwealth of Virginia Waterworks Regulations.

9-0102.6E Air releases and blow-offs shall be installed on all mains 12" and larger. Hydrants should be utilized for this purpose where feasible.

9-0102.6F All valves 16" and larger shall be butterfly valves.

9-0102.6G 2" blow-offs shall be installed on all water mains.

9-0102.6H When utilities are proposed in close proximity to an existing water main, or when grade changes are proposed above an existing water main, test holes shall be required.

9-0102.6I Depending upon test hole results, sheeting or bracing may be required when other facilities cross an existing water main.

9-0102.6J Corrosion control is required for casing pipe. Corrosion control measures on pipe crossing streams and utilities with bonded joints and im-

pressed current shall be coordinated with the water supply agency.

9-0102.7 Miscellaneous Notes

9-0102.7A Easement plats shall be included as part of the final plan submission (off- and on-site).

9-0102.7B Plan approval by the FCWA may be subject to developer acceptance of satisfactory agreement for the installation of off-site or oversize facilities.

9-0102.7C New proposal requests, or requests requiring engineering analysis, shall include a fee. A fee shall be required for all requests to update previous proposals.

9-0102.7D FCWA approval may be contingent upon the installation of water mains in other sections or subdivisions and connections thereto.

9-0103 Fire Hydrants

9-0103.1 A permit for the installation of fire hydrants shall be obtained from the Director.

9-0103.2 Fire hydrants shall be of 3 way class, with one 4 1/2" pumper outlet and two 2 1/2" hose outlets all with National Standard fire hose coupling threads.

9-0103.3 Fire hydrants shall conform to the American Waterworks Association Specifications, C-502.64, and will be provided a 6" connection to the main with a minimum 5 1/4" valve opening. The center of the hydrant shall be a maximum of 24" from the top of face of curb. The closest part of the hydrant (4 1/2" nozzle cover) shall be a minimum 12" from top face of curb.

9-0103.4 Fire hydrants placed on streets without curb and gutter shall be in accordance with the standard and the terms of the permit. The 2 1/2" hose connection shall have a minimum clearance of 5' from the side slopes.

9-0103.5 The bottom of the safety flange shall be 2 1/2" above the elevation of the edge of the shoulder on streets without curb and gutter and above the elevation of curb on streets with curb and gutter.

9-0103.6 A suitable sump must be provided to allow draining of the hydrant.

9-0103.7 The location of all fire hydrants shall be shown on the plans for the improvements.

9-0103.8 The hydrant shall be located so that the thrust block is placed in undisturbed soil. In those cases where this is not practical, the soil beneath and surrounding the thrust block shall be compacted to 95% of maximum density in accordance with VDOT Sections 523.03, 302, 303.10 and 200.02.

9-0103.9 Fire hydrant branch connections placed in fill material shall be installed using restrained joint pipe or tie rods as approved by the engineer for the public water supply agency. Retainer glands shall not be permitted.

9-0103.10 The 4 1/2" nozzle shall face the street, travel lane, service drive or normal vehicular travelway, whichever applies.

9-0103.11 All fire hydrants on public or private streets and in easement areas shall be installed in accordance with the current County design and construction standards.

9-0103.12 All water mains and fire hydrants shall be installed in accordance with current specifications of the FCWA.

9-0200 FIRE MARSHAL REQUIREMENTS

9-0201 General Data. In accordance with § 62-2-4 et seq. (Fire Prevention Code) of the Code:

9-0201.1 No person shall use, tamper with, damage or destroy any fire hydrants, valves, or water mains within the County; except that a fire depart-

ment may use such hydrants for fire fighting and training purposes. Also a person who has obtained a permit for use from the public water authority or utility having proper jurisdiction over said items may use the items.

9-0201.2 When use is by a person under permit from the authority having jurisdiction, the user shall comply with all policies that are outlined on said permit or application.

9-0202 Construction Requirements[1]

9-0202.1 Fire Hydrant Information

9-0202.1A All fire flow requirements shall be determined by the Fire Marshal.

9-0202.1B Fire flow waivers shall be requested through DEM (§ 9-0100 et seq.).

9-0202.1C Sidewalks shall be warped around hydrants in areas where the grass area is shown as 2' or less.

9-0202.1D Easements shall be required for hydrants located on ditch section streets where there is less than 5' clearance from hydrant to the property line. Show typical installation.

9-0202.1E Hydrants shall not be placed in concrete areas.

9-0202.1F If hydrants are to be located in an area of possible guardrail construction, plans should be checked for notes regarding possible obstruction.

9-0202.1G Hydrants shall be installed either 5' from the point of curvature of curb returns or on the property line in subdivisions.

[1]See § 9-0103 and Plates 1-9 through 5-9 for fire hydrant details.

9-0202.1H Steel posts shall be installed around hydrants as needed for industrial and commercial development where curbs are not available.

9-0202.1I All fire hydrants shall be located a minimum of 50' from all buildings.

9-0202.1J No plantings or other obstructions shall be made within 4' of any fire hydrant, or within 10' of a siamese connection.

9-0202.1K Where standpipes or sprinkler systems are required within buildings, a fire hydrant will be located within 100' of the fire department connection.

9-0202.1L All fire hydrants shall be located in accordance with the following schedule (distance measured from the hydrant to the most remote point of vehicular access on the site): Industrial Buildings - 250'; School Buildings - 300'; Commercial, Churches and Office Buildings - 350'; Apartments, Multi-family and Townhouses - 350'; Single family dwellings - 500'.

9-0202.2 Guideline Criteria

9-0202.2A All hydrant branches shall have a minimum cover of 3' at the ditch line.

9-0202.2B All fire hydrant locations shall be reviewed by the County for conformity to the Fairfax County Standards as shown in Plates 1-9 thru 5-9.

9-0202.2C It has been requested by the Fire Marshal's Office that all site plans submitted for review include the following information:

9-0202.2C(1) Use group classification (defined by the VUSBC).

9-0202.2C(2) Type of construction (defined by the VUSBC).

9-0202.2C(3) Existing and proposed water mains.

9-0202.2C(4) Existing and proposed fire hydrants.

9-0202.2C(5) Water main size.

9-0202.2C(6) Available water pressure and flow capability, static pressure, residual pressure, flow in GPM.

9-0202.2C(7) Type of fire suppression or detection equipment to be provided; e.g., sprinklers, standpipes, smoke or heat detectors. (See current edition of the VUSBC for requirements).

9-0202.2C(8) Location and size of underground fire lines.

9-0202.2C(9) Location of fire department siamese connections (street front of building).

9-0202.2C(10) Height of building in feet and stories.

9-0202.2C(11) Breakdown of building interiors such as firewalls, tenant separations, etc.

9-0202.2D If a fixed fire suppression or detection system is to be provided, the type of system shall be clearly indicated. The installation shall be subject to the applicable section of the VUSBC.

9-0202.2E Private bridges must have a design satisfactory to the Director to carry fire equipment where necessary. AASHTO "Standard Specifications for Highway Bridges" and the VDOT Bridge Engineer will be consulted for guidance on a case by case basis.

9-0202.2F Fire Flow Requirements

9-0202.2F(1) One and two-family dwellings - minimum exposure distances.

TABLE 9.1 FIRE FLOW

Minimum Exposure Distance	Fire Flow (GPM)
0' - 10'	1500 - 2000
11' - 30'	1000 - 1500
31' and greater	1000

9-0202.2F(2) Townhouses or multiplex units - residential or professional 2500 GPM.

9-0202.2F(3) Other uses - fire flow requirements established by the procedures and formulas delineated below.

9-0202.2G Fire Flow Requirement Determination[1]:

9-0202.2G(1) Definitions (for this determination only):

Required Fire Flow: Fire flow water to the site required for fire fighting for any and all structures and appurtenances on the site.

Floor level: Any occupiable level of a structure whether above or below grade.

F: Required fire flow in GPM.

C: Coefficient related to the type of construction (see Table 9.2).

A: The total area of all floor levels in the structure being considered. (Gross floor area of the whole structure.)

[1]All required fire flow shall be calculated at a minimum 20 PSI residual pressure remaining on the public water or central well system to be in conformance with Commonwealth of Virginia Waterworks Regulations.

TABLE 9.2 FIRE FLOW COEFFICIENT

C	TYPE OF CONSTRUCTION
1.5	for wood construction (1993 VUSBC, types 5A, 5B)
1.0	for ordinary construction (1993 VUSBC, types 3A, 3B)
0.9	for heavy timber construction (1993 VUSBC, type 4)
0.8	for noncombustible construction (1993 VUSBC, types 2A, 2B, 2C)
0.6	for fire resistive construction (1993 VUSBC, types 1A, 1B)

9-0202.2G(2) Maximums - Fire flow required shall not exceed the following maximums (before any reductions are taken):

TABLE 9.3 MAXIMUM FIRE FLOW

GPM	TYPE OF CONSTRUCTION
8000	Wood, heavy timber or ordinary construction
6000	Noncombustible or fire-resistive construction

9-0202.2G(3) Minimums - Fire flow required shall never be less than 500 GPM for a structure. Fire flow required for single-family detached dwellings shall never be less than 1000 GPM. Both values are absolute minimums after all reductions are taken.

9-0202.2G(4) Complete automatic sprinkler protection reduction - Value obtained from the formula given below may be reduced 50% only if the structure or structures under consideration are completely covered with a sprinkler system. Partial protection will not be allowed for any reduction in fire flow.

9-0202.2G(5) Calculation formula: $F = 18\ C\ (A)^{.5}$ where F, C, A are defined in § 9-0202.2G(1). This formula must be applied sequentially to each structure on the site. The largest fire flow calculated then applies.

9-0202.2G(6) Exposure surcharges - The value calculated in the above formula shall be increased by a percentage for exposure of other structures within 150' of the structure under consideration. The percentage increase for any one side shall be:

TABLE 9.4 EXPOSURE SURCHARGES

Separation (ft)	Percentage (%)
0-10	25
10.1-30	20
30.1-60	15
60.1-100	10
100.1-150	5

Total exposure surcharge shall be the sum of the percentages for all sides of the building but shall not exceed 75%.

9-0202.2G(7) Special consideration - The above calculation procedure does not apply to: high hazard structures; lumber yards or lumber storage; petroleum storage; refineries; chemical plants; grain storage; power generating facilities; hazardous manufacturing processes; and paint storage, high piled combustible storage, flammable liquids storage, etc. All of the above require special consideration and direct consultation with the Fire Prevention Division regarding fire flow requirement.

9-0202.2G(8) Occupancy reductions - The following percentage reductions to the value calculated by the above formula may be taken:

TABLE 9.5 OCCUPANCY REDUCTIONS

Type Occupancy	%	Type Occupancy	%
Asylums	15	Prisons	10
Churches	15	Public Buildings	10
Clubs	10	Rooming Houses	10
Dormitories	25	Schools	15
Hospitals	20	Open Parking	25
Hotels	10	Structures (stand	
Nursing Homes	15	alone, not under	
Office Buildings	10	buildings	

9-0202.2G(9) Procedure for Calculation of Required Fire Flow:

9-0202.2G(9)a Determine type of construction and hence "C."

9-0202.2G(9)b Determine the gross floor area (A).

9-0202.2G(9)c Determine the occupancy reductions, if any.

9-0202.2G(9)d Apply the sprinkler reduction, if fully covered by a sprinkler system.

9-0202.2G(9)e Determine the total surcharge for exposures.

9-0202.2G(9)f Perform the following multiplication:

9-0202.2G(9)f(1) $F = 18\ C\ (A)^{.5}$

9-0202.2G(9)f(2) (F) (occupancy reduction) (sprinkler reduction) (exposure surcharge) equals total required fire flow for the structure under consideration.

Note: Occupancy reduction is 100% - % given in Table 9.5. Sprinkler reduction is 50%. Exposure surcharge is 100% + % given in Table 9.4.

9-0202.2H Central Well Systems.

9-0202.2H(1) Central well systems apply to one and two-family developments where public water is not available within specified distances required for public water main extension.[1]

9-0202.2H(2) Central well systems shall be designed for a minimum 30,000 gallon storage capacity with adequate pressure for fire fighting activities.

9-0202.2I Fire Protection Waiver Procedures.

9-0202.2I(1) The following information is to be provided when requesting a modification or waiver of any fire protection requirement of the PFM.

9-0202.2I(2) All requests must be submitted and addressed to the appropriate Site Review Branch of DEM and include the following:

9-0202.2I(2)a A plan or sketch showing the proposed location of all improvements on the site and the type of construction involved.

9-0202.2I(2)b The address, tax map reference number and the proposed use of the property.

9-0202.2I(2)c The current zoning classification of the property and if recently rezoned, the rezoning number and the date of approval by the Board.

9-0202.2I(2)d Copies of any required special exception or special permit with date of approval.

[1]Specified distance required equals 125 times the number of proposed lots to the nearest boundary line of the proposed development.

9-0202.2I(2)e Specific item requested to be waived or modified.

9-0202.2I(2)f Length of time for which the waiver is requested.

9-0202.2I(2)g Any proposed alternate form of fire protection.

9-0202.2I(2)h The name, address and telephone number of the person making the request.

9-0202.2I(2)i The County assigned number for site and subdivision plans and waiver requests associated with the property.

9-0202.2J Fire Department Access

9-0202.2J(1) Access for emergency vehicles shall be provided to within 100' of the main or principal entrance of every building. The access shall be provided by a public or private street or parking lot.

9-0202.2J(2) When buildings are more than 5 stories or 50' in height, ladder truck access shall be provided to both the front and rear of the building.

9-0202.2J(3) The access to the rear may be provided by either a street, parking lot, or fire lane.

9-0202.2J(4) The inner surface of the ladder truck access way shall be no less than 15' and no more than 30' from the exterior building wall.

9-0202.2J(5) Where required, fire lanes shall have a minimum width of 24'.

9-0202.2J(6) Required fire department access ways over 100' in length shall have provisions for turning apparatus around (Plate 7-7 should be consulted for design guidance).

9-0202.2J(7) A 12' wide access lane to within 50' of the edge of swimming pools, with an 8' personnel gate in the fence at the point of access is required except for individually owned pools located on single family lots.

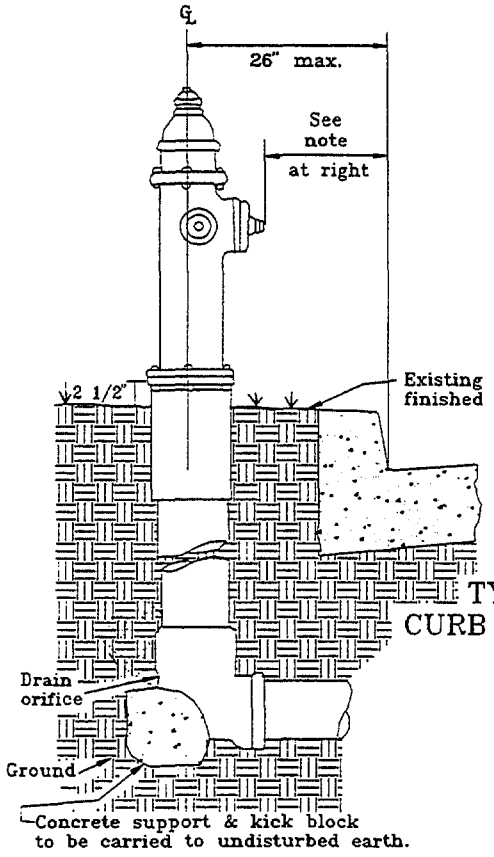

NOTE:
The closest part of the hydrant shall be 14" min. from the flow line of the curb. No hydrants will be installed so that any part of the barrel is within the sidewalk.

TYPICAL SECTION
CURB & GUTTER STREET

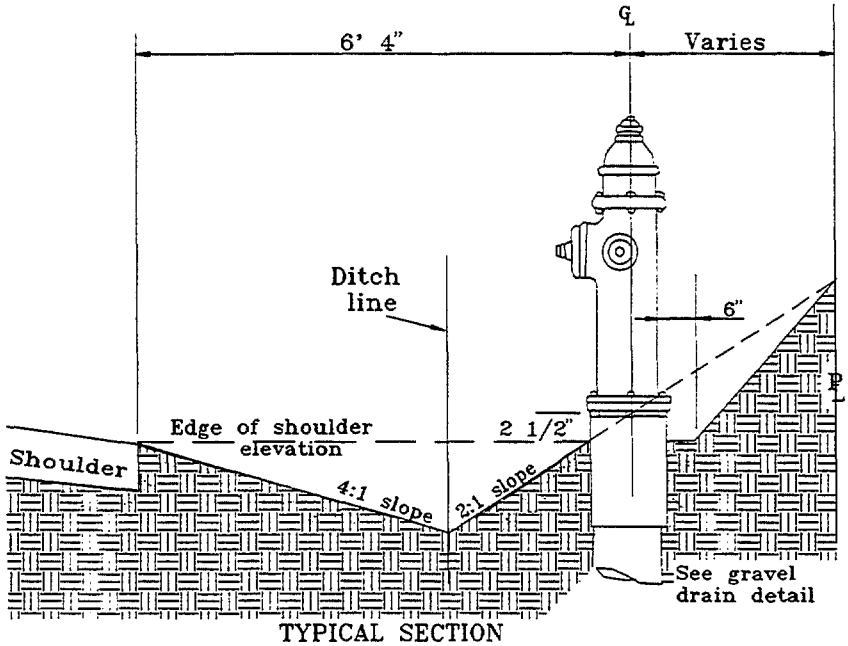

TYPICAL SECTION
STREET WITHOUT CURB & GUTTER

Ref Sec 9-0103
9-2-92
Rev 8-10-94
2-6-95

LOCATION OF FIRE HYDRANTS

PLATE NO	STD NO
1-9	FH-1

17

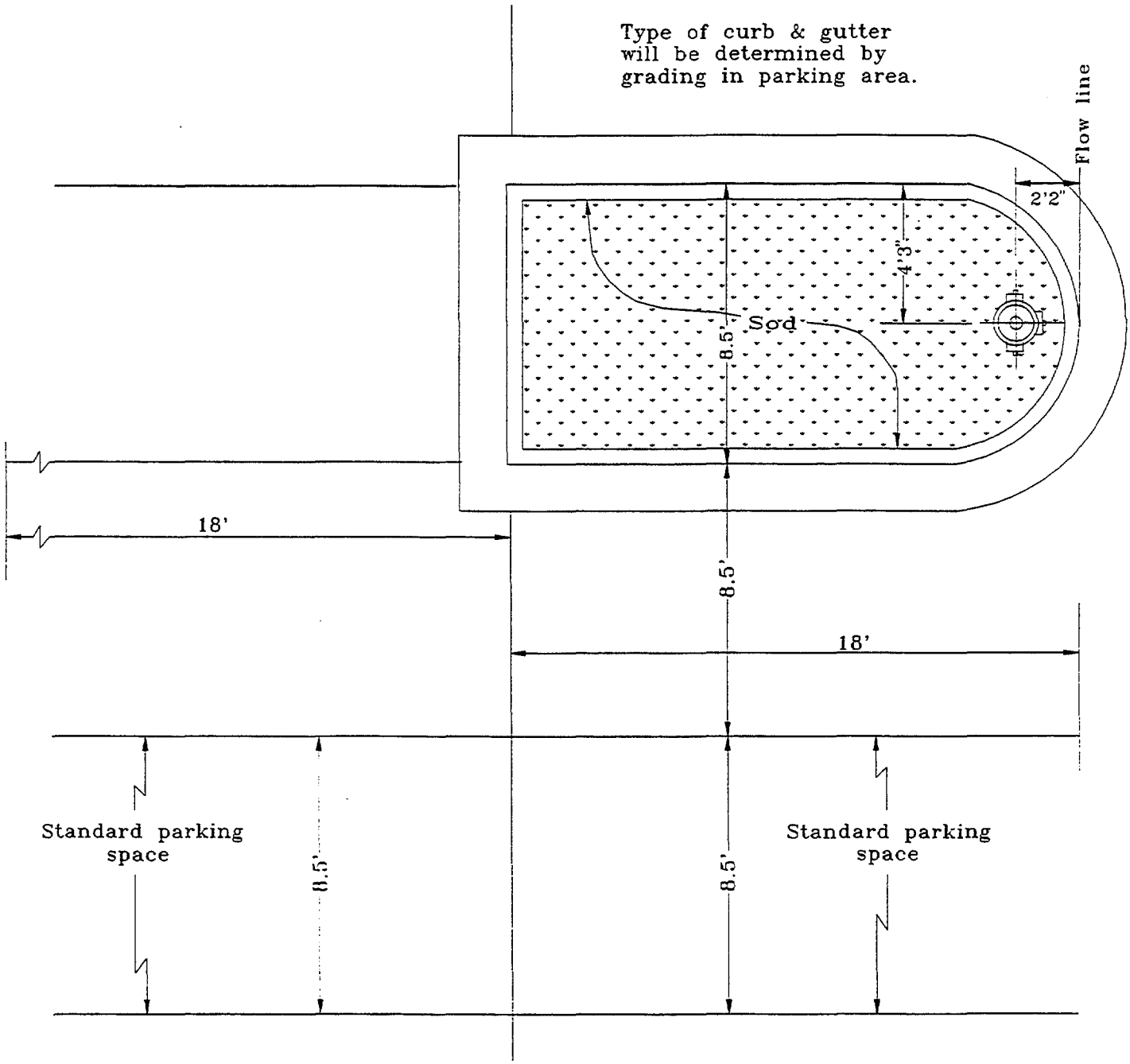

Ref Sec 9-0103 4-8-93 Rev 8-10-94	STANDARD FIRE HYDRANT ISLAND-PARKING AREA	PLATE NO	STD NO
		2-9	FH-2

178

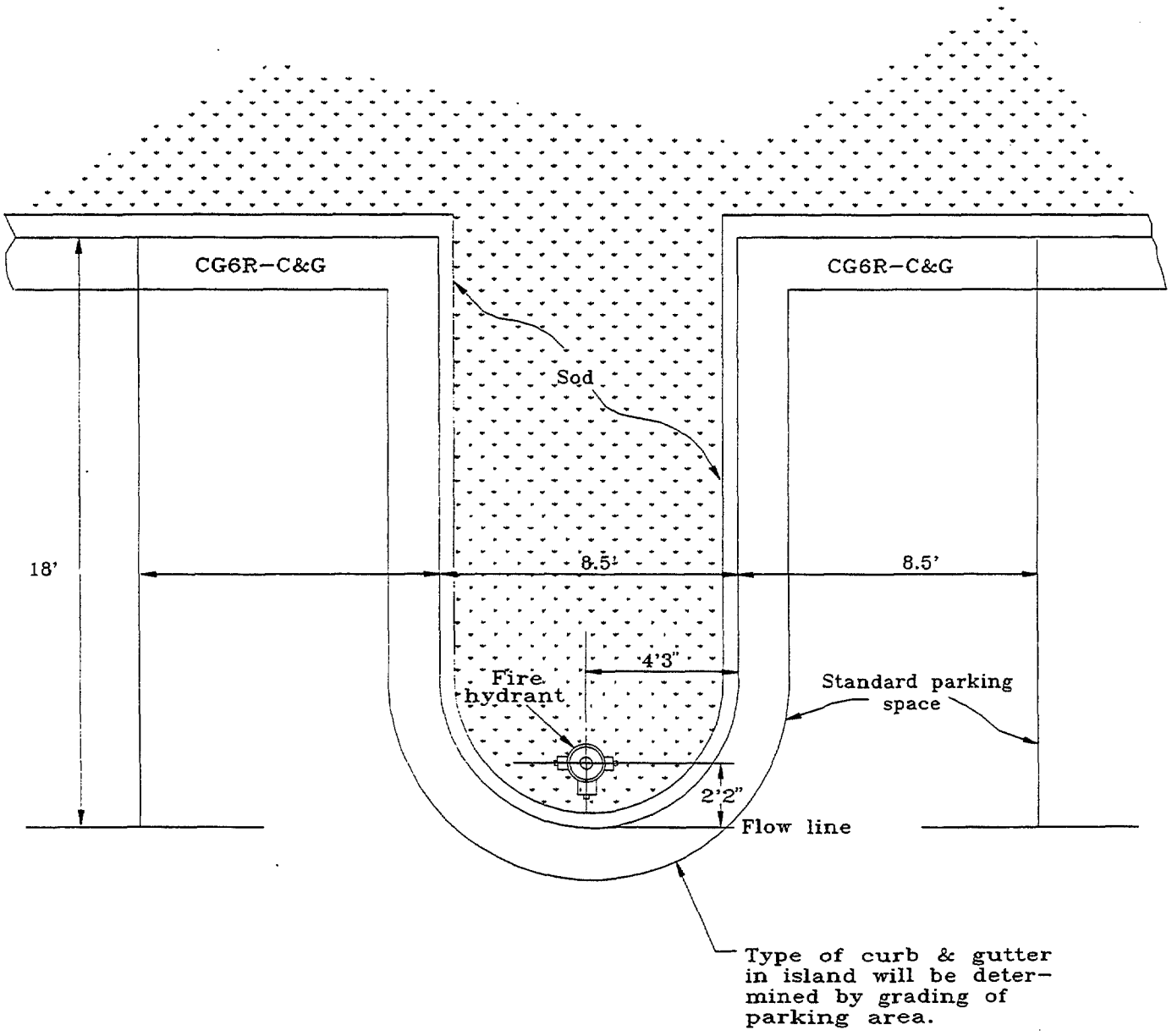

Ref Sec 9-0103 4-8-93 Rev 8-10-94 2-6-95	STANDARD FIRE HYDRANT ISLAND PARKING AREAS	PLATE NO	STD NO
		3-9	FH-3

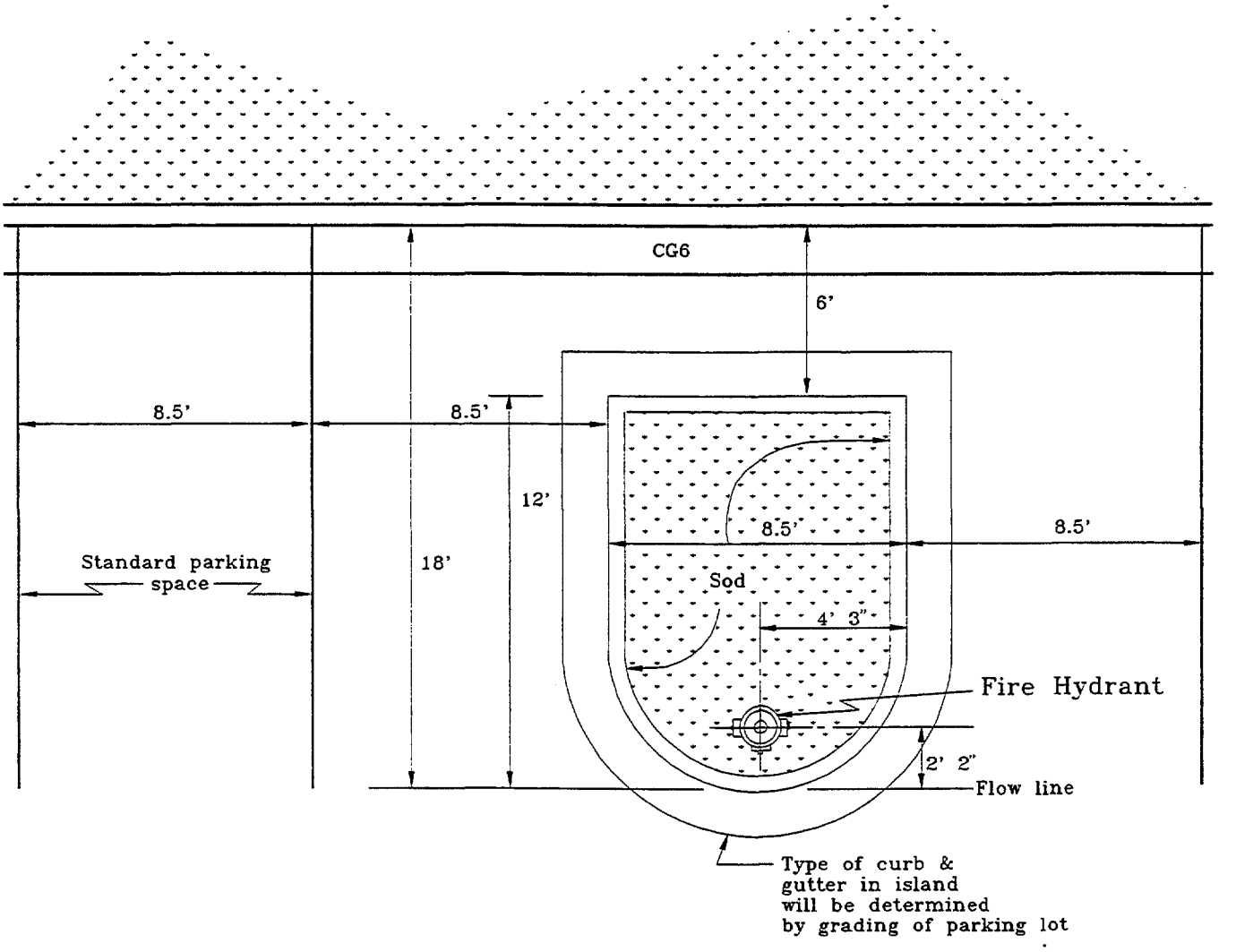

		PLATE NO	STD NO
Ref Sec 9-0103 4-7-93 Rev 8-10-94 2-6-95	STANDARD FIRE HYDRANT ISLAND - PARKING	4-9	FH-4

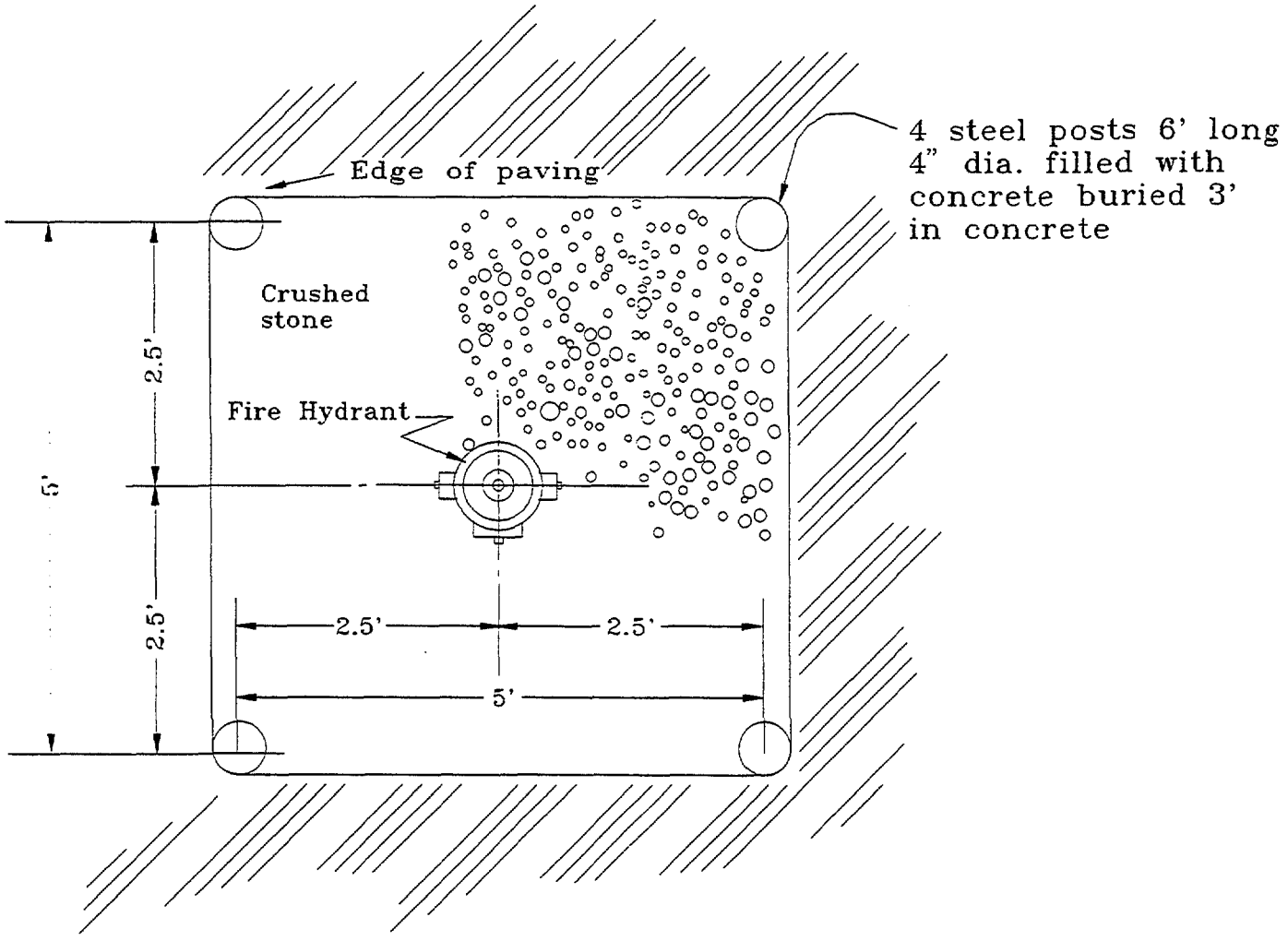

Ref Sec 9-0103 9-2-92 Rev 8-10-94 2-6-95	FIRE HYDRANT PROTECTION IN AREA WHERE ISLAND CANNOT BE CONSTRUCTED	PLATE NO	STD NO
		5-9	FH-5

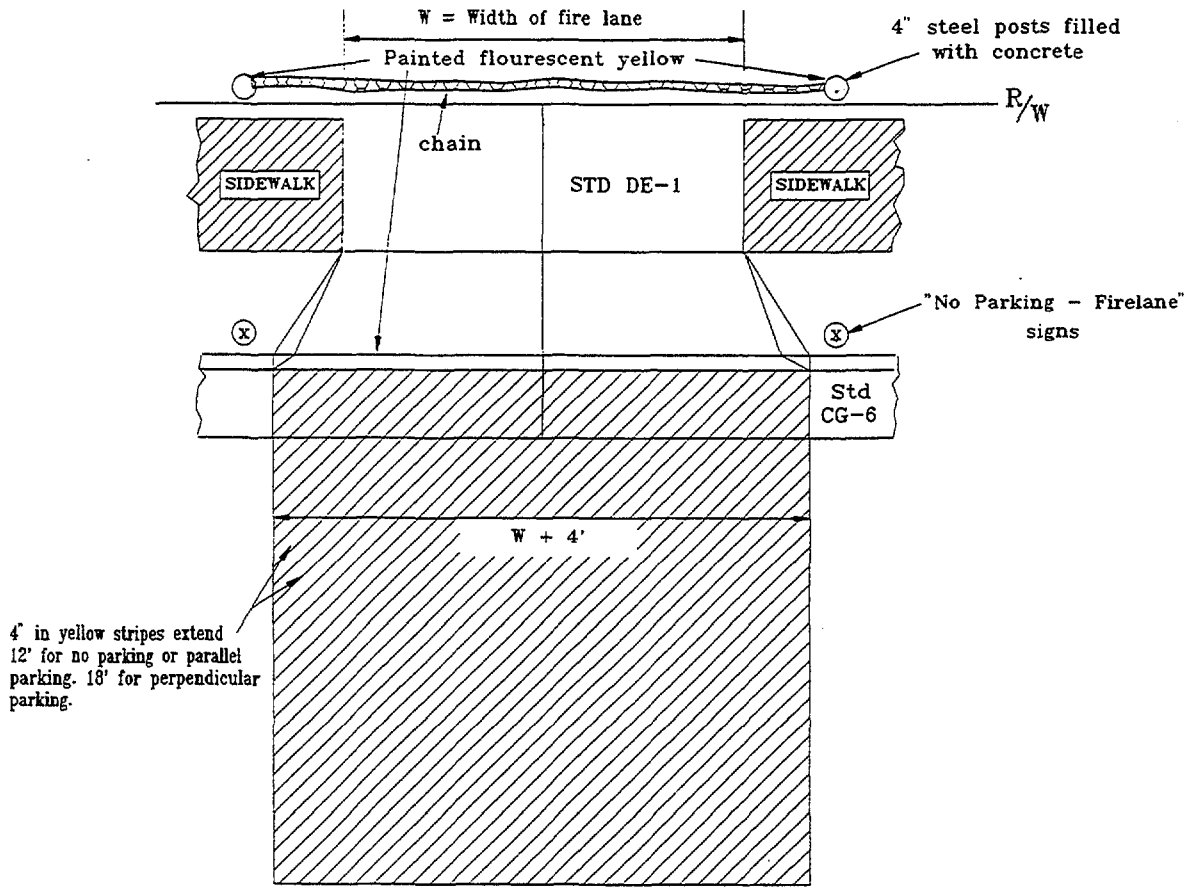

FIRE LANE STANDARD-NOTES

1. Subject to approval of the Fairfax County Fire Marshal, where building entrances are not accessible within 100' of public or private street or parking area, a min. paved width of 24' shall be provided.
2. Where entrances to swimming pools (other than pools located on single family lots and individually owned) are not accessible within 50' of a public or private street or parking area. a min. paved width of 12' shall be provided.
3. Where a developer is applying for a tabular increase in the size of a building because of excess street frontage, a min. paved width of 24' shall be provided around the entire building and to a public or private street. The entire building perimeter shall have an unoccupied space of not less than 30'.
4. See Fire Lane requirements.
5. Access to rear of building more than 5 stories or 50' in height.

Fire lane markings, types of signs, locations, etc., shall be subject to the approval of the Office of the Fire Marshal.

Ref Sec 9-0202 4-7-93 Rev 8-10-94 2-6-95	FIRE LANES	PLATE NO	STD NO
		6-9	FH-7

FAIRFAX COUNTY WATER AUTHORITY

WATER MAIN INSTALLATION AND SERVICE CONTRACTS

SELECTED SECTIONS

- CORROSION CONTROL
- WATER DISTRIBUTION
- THRUST RESTRAINTS
- LEAKAGE TESTS
- STANDARD DETAILS

Contractor has the required experience to perform the work in the opinion of the NACE Certified Corrosion Specialist and a certificate is issued in accordance with Paragraph B. of this section.

B. The Company shall issue a certificate of compliance indicating that all corrosion control measures comply with the Specifications.

C. Testing shall be witnessed, at their option and discretion, by a designated representative of the Authority.

D. Test results shall be recorded in a standard, uniform format approved by the Authority and shall be retained for review on request by same at any time. These documents shall be made a permanent record of the pipeline installation and shall be submitted at the completion of the Work.

E. As-Built drawings:
   1. Provide marked-up Drawings indicating the "as-built" location of each key cathodic protection item, including the following:
      a. Test stations
      b. Test station wire routing
   2. Provide detailed field sketches showing the location of all test stations with respect to existing physical features, including three ties where possible. Identify each test station by test station number and pipeline station number.

PART 2 PRODUCTS

2.01 MANUFACTURERS

A. Beckman Industrial Corporation, Brea, CA

B. Biddle Instruments, Blue Bell, PA

C. CP Test Services, Inc., Harrison, NJ

D. Central Plastics Company, Shawnee, OK

E. Continental Industries, Inc., Tulsa, OK

F. Denso North America Inc., Houston, TX

G. Erico Products, Inc., Cleveland, OH

H. G.C. Electronics, Rockford, IL

SECTION 02655

CORROSION CONTROL

PART 1 GENERAL

1.01 SECTION INCLUDES

A. Bonded Joints

B. Cathodic Protection Coatings

C. Insulated Joints

D. Magnesium Anodes

E. Test Stations

F. Miscellaneous Cathodic Protection Work

1.02 UNIT PRICES

A. Refer to Section 01025 - Measurement and Payment.

1.03 QUALITY ASSURANCE

A. Subcontractor Qualifications
   1. Employ an independent Cathodic Protection Company (Company) to install, test and certify the cathodic protection system. This system includes bonded joints, test stations and field-applied coating materials. Said Company shall have the following qualifications:
      a. Continuously engaged in the field of corrosion control installations and electrical/corrosion control testing.
      b. Not less than 5 years experience in the installation and testing of cathodic protection systems for underground pipelines of similar type and equal complexity as the system specified and indicated.
      c. Completed at least three successful corrosion control systems for underground pipelines of similar type and equal complexity as the system specified and indicated.
      d. Employ a National Association of Corrosion Engineers(NACE) Certified Corrosion Specialist.
   2. Consideration will be given to allow the general contractor to perform the installation work under the direct supervision of the Company if the

I. Gas Electronics, Seymour, MI

J. Gerome Manufacturing Company, Inc., Uniontown, PA

K. Harco Corporation, Medina, OH

L. Lietz, Overland Park, KS

M. Multicore Solders, Westburg, NY

N. PSI Industries, Burbank, CA

O. Pipeline Seal & Insulator, Inc. Houston, TX

P. Royston Laboratories, Inc., Pittsburgh, PA

Q. Thomas and Betts Corporation, Raritan, NJ

R. Tinker and Raso, San Gabriel, CA

S. Trenton Corporation, Ann Arbor, MI

T. 3M Company, St. Paul, MN

2.02 MATERIALS

A. Magnesium Anodes: Furnish Type H-1 Grade III packaged magnesium anodes as manufactured by Harco Corporation.

1. Anode Material: Bare anode weights shall be 17 pounds for 17 pound anodes and 32 pounds for 32 pound anodes. Composition by weight shall be as follows:

ELEMENT	PERCENT
Aluminum	5.3 to 6.7
Manganese	0.15 Minimum
Zinc	2.5 to 3.5
Silicon	0.10 Maximum
Copper	0.02 Maximum
Nickel	0.002 Maximum
Iron	0.003 Maximum
Other	0.30 Maximum
Magnesium	Remainder

2. Wire: Provide 20 feet of No. 12 AWG solid copper wire, type TW insulation, black color unless otherwise specified.
3. Anode assembly: Anodes shall be packaged in a permeable cloth bag with approximately 25 pounds of prepared backfill for 17-pound anodes and 38 pounds of prepared backfill for 32-pound anodes. The prepared backfill shall have the following composition by weight:

MATERIAL	PERCENT
Ground hydrant gypsum	75
Powdered Wyoming bentonite	20
Anhydrous sodium sulfate	5

B. Cleaning solvent: Provide Chloro-kleen as manufactured by GC Electronics or PC-81 as manufactured by Multicore Solders.

C. Electrical Coating Compound: Provide Scotchkote as manufactured by the 3M Company.

D. Insulated Flange Materials: Provide insulating materials which include an insulating gasket, insulating sleeves and washers as manufactured by PSI Industries.
   1. Insulating Gasket:
      a. Type "E" Neoprene-faced phenolic
      b. Gasket shall protrude 1/16-inch into the pipe to prevent bridging of the gap by foreign conducting material in the pipe.
      c. Gasket seal shall be nitrile (buna N)
   2. Insulating Sleeves:
      a. G-10 Epoxy/Glass
   3. Insulating Washers:
      a. G-10 Epoxy/Glass - provide two washers for each bolt.
   4. Steel Washers:
      a. 1/8-inch thick plated hot rolled steel - provide two washers for each bolt.

E. Insulated Union Materials: Provide insulating materials composed of nylon as made by Central Plastic Company.

F. Electrical Tape: Provide Scotch 130C vinyl plastic electrical tape and Scotch 88 rubber splicing tape.

G. Terminal Boxes:
   1. Buried Service: Provide Model NM-5 terminal boxes as manufactured by CP Test Services. Shaft length shall be 18 inches. The letters "FCWA" shall be cast into the cover for each terminal box.

2. Vaults: Provide Testox Model 1003 terminal boxes as manufactured by Gerome Manufacturing Company, Inc. Terminal boxes shall be 8 terminal, aluminum casting, double hub with slip fit for 1 1/4-inch pipe and the letters "FCWA" shall be cast into the cover.

H. Terminal Lugs and Connectors:
   1. Terminal lugs: Provide one hole non-insulated terminal lugs for 1/4-inch bolt size Series 54100 and Model C10-14 as manufactured by Thomas and Betts.
   2. Butt Splices: Provide non-insulated butt splices, Series 54500 and Model 2C10 manufactured by Thomas and Betts.

I. Solder: Provide .062 inch diameter 60/40 Solder with 3.5 percent type RMA rosin core.

J. Copper Wire: With the exception of wire purchased as part of the magnesium anode assembly, provide stranded copper wire of the AWG wire sizes and color shown on Standard Details.
   1. Wire for bonded joints: All wire for joint bonding shall be single conductor, stranded copper with high molecular weight polyethylene (HMWPE) insulation.
   2. Wire for test stations: All wire for test stations shall be single conductor, stranded copper wire with 600-volt THWN, THHN or THW insulation.

K. Thermite Weld Coating Materials: Provide weld coating materials as manufactured by Royston Laboratories Inc.
   1. Primer: Roybond 747 primer
   2. Weld Coating: Royston Handy Cap 2

L. Field-applied Pipe Coating: Petrolatum system for underground service as manufactured by Denso Incorporated or Wax-Tape as manufactured by the Trenton Corporation.

M. Brass Survey Markers: 2-inch flat survey monument, model no. 8134-03, as manufactured by Lietz.

N. Reference Electrodes: Provide a permanent copper-copper sulfate reference electrode with a 2" x 8" long schedule 80 PVC body, an overall package size of 8" x 16" long and a weight of 15 pounds. Reference electrodes shall be supplied prepackaged in a permeable cloth bah with special copper-copper sulfate reference electrode backfill. Lead wire shall be a minimum of 25 feet long of No. 14 AWG stranded copper wire with high molecular weight polyethylene(HMWPE) insulation. The lead wire

shall be attached to the electrode core with the manufacturer's standard connection. The connection shall be stronger than the wire.

2.04 EQUIPMENT

A. Thermite Welding Equipment: Provide Cadweld or Thermoweld Thermite welding equipment as manufactured by Erico Products Inc. and Continental Industries, Inc. respectively.

1. Refer to the following table for the equipment required for making the attachment of copper wire to ductile iron pipe.

Equipment for Attachment of Copper Wire to Ductile or Cast Iron Pipe and Fittings

	CADWELD			THERMOWELD		
AWG Wire Size	Mold No.	Alloy Charge	Adapter Sleeve	Mold No.	PCI Charge	Adapter Sleeve
12	CAHBA-1G-*	CA25XF-19	CAB-133-1H	M-156-*	25	A-200
8	CAHBA-1G-*	CA25XF-19	- -	M-156-*	25	- -
6	CAHBA-1H-*	CA25XF-19	- -	M-157-*	25	- -
4	CAHBA-1L-*	CA45XF-19	- -	M-159-*	45	- -
2	CAHBA-1V-*	CA45XF-19	- -	M-161-*	45	- -

*Specify pipe size

2. Refer to the following table for the equipment required for making the attachment of copper wire to Steel Pipe.

Equipment for Attachment of Copper Wire to Steel Pipe

	CADWELD			THERMOWELD		
AWG Wire Size	Mold No.	Alloy Charge	Adapter Sleeve	Mold No.	PCI Charge	Adapter Sleeve
12	CAHAA-1G	CA15	CAB-133-1H	M-100	15	A-200
8	CAHAA-1G	CA15	- -	M-100	15	- -
6	CAHAA-1H	CA15	- -	M-102	15	- -
4	CAHAA-1L	CA15	- -	M-106	15	- -
2	CAHAA-1V	CA32	- -	M-112	32	- -

B. Field Test Equipment: The following equipment is required for testing components of the corrosion control system.

1. 1 each, Model 601 or 702 Insulation Checker, as manufactured by Gas Electronics Company.
2. 1 each, HD100 Series, Digital Multimeter, with case and test leads as manufactured by Beckman Industrial Corporation.
3. 2 each, Model 68 Copper/Copper Sulfate Reference Electrodes as manufactured by Tinker And Raso.
4. 1 quart Copper Sulfate Anti-Freeze Solution.
5. 1/2 lb. Copper Sulfate Crystals.
6. 1 Model 247001 Digital Low Resistance Ohmmeter as manufactured by Biddle Instruments.
7. 1 Model 242011 Duplex Helical Current and Potential Hand Spikes, length of cables as required, as manufactured by Biddle Instruments.
8. 1 Model 249004 Calibration Shunt rated at 0.001 ohm, 100 amperes as manufactured by Biddle Instruments.

PART 3 EXECUTION

3.01 INSTALLATION

A. Bonded Joints: Bond water main joints including pipe, fittings, valves and hydrants at locations indicated on the Drawings. Bonded joints shall be installed by Thermite Welding as specified herein.

B. Thermite Welding: Wires shall be attached to the pipe by the thermite weld process.
   1. Preparation: Prepare a 2-inch square area along the top of the pipe or fitting prior to making each thermite weld.
      a. Remove all mill coating, dirt, grime, and grease from weld area by wire brushing and the use of suitable safety solvents.
      b. Clean the weld area to a bright shiny surface by the use of a mechanical grinder or file.
      c. Copper wire shall be dry, free from dirt, grease, corrosion by-products and other foreign matter.
      d. Cut wire in a manner which does not damage strands and position in accordance with the Drawings.
      e. Use adapter sleeves, on 12AWG wire to build up the wire diameter to fit the opening of the larger size welders. Extend wire 1/4-inch beyond the end of the sleeve.
   2. Installation: Install thermite welds in accordance with the Drawings and manufacturer recommended procedures.
   3. Testing Welds: After weld has cooled remove all slag and test weld in accordance with Article 3.02 Tests, herein.
   4. Cleaning Molds: Clean mold and mold covers after completing each weld to assure that no slag will penetrate into next weld.

5. Coating Thermite Welds: Coat all thermite welds with Roybond 747 Primer and a Royston Handy Cap 2.
   a. Preparation: Clean all mud, dirt grease, oil and other from the completed weld area.
   b. Primer: Apply a coat of primer and allow to dry to a non-glossy appearance.
   c. Caps:
      1) Remove the release paper from the bottom of the cap.
      2) Position the dome of the cap over the weld and the tunnel over the lead wire.
      3) Push the dome of the cap firmly into the weld area, lift the lead wire away from the pipe and squeeze the black rubber compound completely around and underneath the wire.
      4) Reposition the lead wire back down on the pipe and press the black rubber compound into firm contact with the pipe over the entire area. Ensure that all bare wire is covered.

C. Magnesium Anodes: Install magnesium anodes as shown in the Drawings and where designated on the Drawings.
   1. Preparation: Remove the paper-shipping bag from the anode prior to installation.
   2. Anode and Wire Location: Install anode such that the uppermost part of the anode is at least as deep as the bottom of the pipe it is protecting.
      a. Provide a minimum of 3 feet of cover for the anode lead wire. Increase the cover to 4 feet within 10 feet of a test station to provide adequate clearance between the wire and the guard posts.
   3. Anode installation in rock areas: If solid rock is encountered at a depth which will not accommodate normal installation of the anode, investigate the immediate area to determine if anode can be installed at the specified depth somewhere in the immediate area.
      a. If the Contractor is unable to find a place in the immediate area of the specified anode location where the anode can be installed to the specified depth, install anode closer to the surface, with a minimum cover of 3 feet over the top of the anode. All deviations from standard anode installation must be approved in advance by the Engineer.
   4. Anode Backfill: Backfill anode with clean earth, free from large rocks and organic material.
      a. Do not backfill anodes with sand.

D. Insulated Flanges: Install insulating gaskets between pipe flanges with wire leads attached to the pipe on both sides of the flange as shown in the Drawings.

1. Preparation: Clean all mud, dirt, grease, oil and other contaminants from all flange surfaces. Check the flange face and bolt hole tolerances and verify clearances prior to installing insulating gasket materials.
2. Installation: Install insulated flange gasket, sleeves and washers in accordance with the Drawings and the manufacturer's recommended procedures. Care shall be taken during assembly to ensure electrical isolation between the opposing flange faces. Coat flanges with cathodic protection coating as shown on the Drawings. Wire leads shall be attached to both sides of the insulated flange as shown on the Drawings.

E. Insulated Unions: Install insulated unions between two threaded pipe ends as shown on the Drawings.

F. Wire Connectors and Terminations:
1. All wire leads into a terminal box shall be soldered to a one-hole terminal lug. The copper wire must be dry and free from dirt, grease, corrosion byproducts and foreign matter. Clean the copper wire with a solvent prior to soldering.
2. When wire splicing is required, the conductors shall be placed in a butt splice connector, crimped, soldered, and insulated as shown on the Drawings. Clean wire as described above prior to soldering. Splices shall be insulated by spirally wrapping (minimum 50 percent overlap) with two layers of high voltage rubber splicing tape and two layers of vinyl electrical tape.
3. No splices will be allowed in joint bond wires.

G. Test Stations: Test station installations are comprised of a terminal box, concrete pad, guard post, 2-inch brass survey marker, and wire leads, in accordance with the Drawings. Test stations vary only in the number and size of wire leads associated with each installation. The type of test station, number, size, and color of wire leads are shown on the Drawings.
1. Test Station Wire Leads: Route test station wire leads with the same cover as required for anode leads.
   a. Tape wire leads at 10 foot intervals.
   b. When multiple anode leads are terminated in a test station, splice a different color anode lead to each anode for identification.
   c. Use thermite weld process to attach test station lead wires to pipe.
2. Test Station Guard Posts: Test station guard posts shall be primed with a polyamide epoxy primer and top coated with 2 coats of a polyurethane enamel. Paint system dry film thickness shall be 8.0 mils minimum. The top coat color shall be OSHA Federal Safety Blue. Apply paint in accordance with the paint manufacturer's recommendations.

H. Field-applied Pipe Coating: Coat pipe, fittings and appurtenances with Denso Petrolatum Tape, or Wax-Tape, in accordance with the Manufacturer's instructions, in the locations indicated on the Drawings.

I. Reference Electrodes:
   1. Install a reference electrode at test stations as indicated on the Drawings and specified herein. The reference electrode shall be installed 6 inches from the water main between the foreign pipeline and water main. Backfill in accordance with the requirements for magnesium anodes.
   2. Prior to installation, the clear plastic cover shall be removed from the package. The cloth bag containing the special backfill shall remain intact.

3.02 TESTS

A. Field Testing - General:
   1. Test equipment shall be as specified in PART 2 PRODUCTS.
   2. Bonded Joints shall be tested prior to coating thermite welds and backfilling.
   3. The following tests shall be performed upon completion of the water main and corrosion control system installation:
      a. Continuity Test
      b. Insulated Joint Effectiveness Test
      c. Casing Insulator Effectiveness Test
   4. Construction defects located during testing shall be corrected by the Contractor.

B. Bonded Joint Test Procedure:
   1. Conduct electrical resistance tests on each bonded joint. Measure the resistance of each bonded joint with a low resistance ohmmeter in strict accordance with the manufacturer's operating instructions. Use the probes to contact the pipe on each side of the joint, without touching the thermite weld connection or wire. The contact area shall be cleaned to bright metal by filing and grinding prior to testing if the test surface exhibits any rusting or oxidation. Probe connections to the bond wire or thermite welds shall not be acceptable. Record the measured bonded joint resistance.

2. Maximum allowable resistance (ohms) per bonded joint is as follows:

BOND TYPE	#2 AWG	#4 AWG	#6 AWG
Pipe Joint (push on, mechanical or flanged)	0.000165	0.000265	0.000420
Coupling/Sleeve	0.000260	0.000425	0.000670

3. Replace any joint bonds that exceed the allowable resistance and retest.
4. Protect the completed joint bond during the backfilling operation.

C. Continuity Test Procedure:
1. Conduct an overall continuity test at the end of the work. The longitudinal pipe resistance shall be measured by impressing a DC test current between a pipe test wire at consecutive test stations. DC voltage shall be simultaneously measured while impressing the DC current. The resulting span resistance shall be calculated and presented to the Engineer for review and approval.
2. Acceptable span resistance: The maximum acceptable span resistance shall be the summation of the following:
   a) Number of pipe joints multiplied by the theoretical resistance of a joint bond.
   b) Number of pipe segments multiplied by the resistance per pipe segment (resistance per pipe segment to be certified by the pipe fabricator).
3. Defective joint bonds, discovered during the testing shall be located, uncovered, and repaired.

D. Insulated Joint Effectiveness Test Procedure
1. The effectiveness of all dielectric insulating flanges shall be tested utilizing a Gas Electronics Insulator Tester Model 601 or 702 in accordance with the manufacturer's operating instructions.

E. Casing Insulator Effectiveness Test Procedure
1. The effectiveness of all casing insulators shall be tested by utilizing a Gas Electronics Insulator Tester Model 702 in accordance with the manufacturer's operating instructions.

END OF SECTION

SECTION 02660

WATER DISTRIBUTION

PART 1 GENERAL

1.01 SECTION INCLUDES

A. Water Main Construction: This Section includes the requirements to construct and test piping, fittings, valves and appurtenances for a water supply and distribution system.

B. Connections to Existing System: Connections to the existing Cast Gray Iron, Ductile Iron, Prestressed Concrete Cylinder Pipe (PCCP), Steel and Asbestos-Cement water piping for extensions, repairs or relocations of existing Water Distribution System.

C. Service and Other Connections: Copper service and air-release/blow-off connections to new and existing water distribution piping.

1.02 UNIT PRICES

A. Refer to Section 01025 - Measurement and Payment

1.03 REFERENCES

A. AWWA/ANSI C110/A21.10 American National Standard for Ductile Iron and Gray-Iron Fittings, 3-inch through 48-inch, for Water and Other Liquids.

B. AWWA C115/A21.15 American National Standard for Flanged Ductile Iron Pipe with Threaded Flanges.

C. ANSI Standard B16.1 Cast Iron Pipe Flanges and Flanged Fittings.

D. AWWA C600 Installation of Ductile Iron Water Mains and Appurtenances.

E. AWWA/ANSI C153/A21.53 Ductile Iron Compact Fittings, 3-inch through 16-inch, for Water and Other Liquids.

F. AWWA/ANSI C153/A21.4 American National Standard for Cement Mortar Lining for Ductile Iron Pipe and Fittings for Water.

G. AWWA/ANSI C151.A21.51 American National Standard for Ductile Iron Pipe Centrifugally Cast in Metal Molds or Sand Lined Molds for Water or Other Liquids.

H. AWWA C206 Field Welding of Steel Water Pipe.

I. ASTM A325 Specification for High Strength Bolts for Structural Steel Joints.

J. AWWA C500 Gate Valves for Water and Sewerage Systems.

K. AWWA C504 Rubber Seated Butterfly Valves.

L. AWWA C502 Dry Barrel Fire Hydrants.

M. Commonwealth of Virginia/State Board of Health, Waterworks Regulations

N. Fairfax County Water Authority, "Approved Product List".

1.04 SUBMITTALS

A. Shop Drawings: Submit for the following in accordance with Section 01300:
   1. Pipe, fittings, and specials
   2. Adapters
   3. Mechanical couplings
   4. Temporary bulkheads
   5. Connections to other mains
   6. Valve or other water main closures
   7. Other items required by the Contract Documents or requested by Engineer.

B. Letter of Certification From Contractor: Contractor shall submit a letter certifying that valves, pipe, fittings and related items to be supplied by the Contractor shall be from the FCWA "Approved Product List" whenever applicable.

C. Laying Schedules: Furnish laying schedules for ductile iron water mains 30 inches in diameter and larger.

D. Proposed Methods and Procedures: Submit for the following in accordance with Section 01300.
   1. Equipment, materials, and procedures for handling pipe, fittings and specials at the site.
   2. Pipe closure methods and procedures.
   3. Wrapping for buried flanges.

E. Fabrication Procedures: Submit the following in accordance with Section 01300.
   1. Welded Outlets: Submit a detailed explanation of the weld process including the items listed under welding, below, before approval by the Engineer.
   2. Welding: equipment, materials and procedures, typical or guaranteed mechanical properties of the weldment, limitations of applications, and quality control procedures.

F. Manufacturer's Certification: Submit the following in accordance with 01300.
   1. Copper coupling: Submit records of chemical analysis, certified test reports stating conformance with the specifications.

G. Test Results: Submit the following in accordance with Section 01300.
   1. Radiographs of welds

1.05 QUALIFICATIONS

A. Welders: Welders shall be qualified in accordance with the requirements of AWWA C206.

1.06 REGULATORY REQUIREMENTS

A. Commonwealth of Virginia/State Board of Health: Water main installation shall be in accordance with the Waterworks Regulations of the State Board of Health.

1.07 DELIVERY, STORAGE AND HANDLING

A. Ductile Iron Pipe: Loading, unloading, handling, inspection and storage of ductile iron and gray iron pipe, fittings, valves and accessories and appurtenances shall be performed in accordance with AWWA C600 and the following:
   1. Delivery of Pipe supplied by the Authority or the Contractor shall be scheduled and coordinated with the pipe manufacturer by the Contractor.
   2. Each piece shall be examined for defects by a representative of the Authority. Defective pieces shall be duly marked "DEFECTIVE -- DO NOT USE."
   3. All defective pieces shall be returned to the manufacturer at his expense. If defective materials are not removed from the project site within 30 days following written notification by the Authority, they will be removed by the Authority at the expense of the supplier. No piece shall be laid which is known to be defective. If any piece is discovered to be defective after having been laid, it shall be removed and replaced

with a sound one in a satisfactory manner by the Contractor at his own expense.

B. Coated Steel Pipe: Transportation and handling of coated pipe shall be in accordance with AWWA C214 and in the following manner to protect the pipe and coating from damage.

1. When the pipe arrives at the job site, the Contractor shall inspect the pipe with a holiday detector before unloading. Any damaged coatings shall be repaired by the pipe manufacturer. After accepting the pipe and just prior to installation of the pipe, the Contractor shall at his expense inspect all exterior coatings on pipe, fittings, specials, and closures for holidays and other defects. Field inspection of the exterior tape wrap coating system shall be by a low amperage, adjustable voltage, pulse type holiday detector, Model E-P as manufactured by Tinker and Rasor Company, San Gabriel, California, or approved equal. The test shall be conducted at a minimum of 8000 volts. All holidays and defects shall be repaired by the Contractor at his expense in accordance with the coating manufacturer's recommendations, as detailed hereinbelow, and to the satisfaction of the Engineer.
2. At the project site the pipe shall only be handled with slings. Metal chains, cables, tongs, forklifts or other equipment likely to cause damage to the coating shall not be permitted. Web slings shall be a type that will not damage the coating. Use a minimum of 2 web slings when handling pipe. Slings shall be 18 inches wide. Slings shall not pass through the pipe. Hooks on the end of the pipe will not be allowed. If possible, the pipe shall be handled from cutback ends. Stringing and storing the coated pipe shall be done using padded 4 inches wide (minimum) skids or select loam or sand berms, or suspended or cutback ends where possible. In urban areas pipe shall be suspended on padded skids or skids placed at cutback area. Where skid chucks are used in contact with coated pipe they shall be padded with several layers of coating tape. Padded chucks shall be placed such that coated pipe is nested on skid rather than the chuck. Coated pipe shall not be laid on pavement without benefit of padding at contact points. In preparation for transporting pipe, use web slings for tie downs.
3. If cables or chains are used during transportation, they must be properly padded with approved suitable material as required to protect the coating from damage while in transit. Spiral welded pipe must be "square stacked" only. Use of a padded horizontal separator strip between successive rows of pipe is necessary to prevent damage to the pipe coating; i.e., rug material with coating tape strips over it for all contact areas where pipe will rest.
4. At all times during construction of the pipeline, every precaution shall be taken to prevent damage to the protective coating. No metal tools or heavy objects shall be permitted to come into contact unnecessarily

with the finished coating. Workmen shall not be permitted to walk upon the coating except when absolutely necessary and approved by the Engineer, in which case they shall wear shoes with rubber or composition soles and heels or other suitable footwear which will not damage the coating.

5. Pipe shall be hoisted from the trench side to the trench by means of slings.

C. Prestressed Concrete Cylinder Pipe (PCCP): Transportation and handling of PCCP, specials, fittings, and other accessories shall be in accordance with the following:

1. The Contractor shall use extreme care while unloading and handling. The Contractor shall assume full responsibility for inspecting all PCCP when it arrives on site. Verification of the bills of lading, packing lists, and materials received shall be the responsibility of the Contractor. Material damaged, lost, or stolen following acceptance by the Contractor shall be his responsibility.
2. Pipe, specials, fittings and other accessories shall be properly handled at the job site in storage and installation. All pipe units shall be kept from contact with adjacent units in handling, hauling, and storage. All pipe, specials, and fittings shall be handled by slings located between the ends of the piece being handled. Under no condition shall a sling passed through the pipe or hooks on the joint rings be used for handling pipe and accessories.
3. If pipe or special is damaged by the Contractor, the damage will be inspected by the Engineer and the pipe manufacturer, at the expense of the Contractor. Damage to the structural strength, joint rings, internal lining or protective coating of the pipe, which in the opinion of the pipe manufacturer and the Engineer can be repaired in the field, shall be promptly and efficiently repaired to the satisfaction of the Engineer and the pipe manufacturer at the expense of the Contractor. If such damage is severe in the opinion of the pipe manufacturer or the Engineer, the pipe shall be rejected and replaced at the expense of the Contractor.

D. Asbestos-Cement Pipe shall be handled in accordance with AWWA C603.

1.08 HANDLING MATERIALS FURNISHED BY THE AUTHORITY

A. Obtaining Materials: The Contractor shall arrange for obtaining materials supplied by the Authority in the following manner unless specified otherwise.

1. The pipe and pipe fittings shall be delivered to the project site by the Authority's pipe manufacturing contractor unless the materials are already in stock at one of the Authority's property yards. In these instances the Contractor shall unload and string such material at no

additional cost to the Authority. Included in this operation is a maximum waiting period of 2 hours for the arrival of the pipe delivery trucks to the project site. If the pipe materials cannot be strung out along the pipeline route, the Contractor shall arrange for their stockpiling within approved areas and shall furnish all necessary plant, labor and equipment required to relocate and string the pipe and fittings where required, at no additional cost to the Authority.

2. All other material furnished by the Authority shall be secured by the Contractor from the Authority's storage yards located at 2220 Fairfax Terrace, Alexandria, Virginia, 4400 Henninger Court, Chantilly, Virginia, and at 8001 Cinderbed Road, Newington, Virginia.
3. The Contractor shall carefully inspect all material at the time of delivery and shall note any missing, damaged or defective material on the packing list accompanying the shipment prior to accepting delivery thereof.
   a. Any missing, damaged or defective material found after the Contractor has accepted delivery of the material shall be replaced by the Contractor at no additional cost to the Authority.
   b. Only one complete valve box shall be furnished for each valve supplied by the Authority. Should the Contractor damage the valve box prior to having the Work accepted by the Authority, he shall furnish an equal replacement at his own expense. Occasionally used valve of hydrants may be furnished, in which case the Contractor shall cooperate with the Authority in placing them in operation.
4. The Contractor shall be responsible for supplying all labor, equipment and other facilities required to load and deliver such items to the Project site with the exception of equipment and one operator for loading material at the property yards which will be provided by the Authority. Before loading such items at the storage yard(s), the Contractor shall inspect the same and report any evidence of damage or imperfection to the Engineer. Any damaged or imperfect item noted at that time will be replaced by the Authority. Any item damaged by the Contractor during loading or delivery to the Project site shall be replaced by the Contractor.

B. Returning Unused Materials: All materials shall remain the property of the Authority.
   1. All unused items shall be returned to the Authority's property yard(s) by the Contractor at his expense (excluding pipe which will be paid for separately).
   2. Any excess material on hand upon the completion of the Project shall be free of mud, loaded, delivered and unloaded at such Authority storage yard listed below or as may be designated by the Engineer. Payment will be made in accordance with Section 01025 Contract, for transporting pipe to and from the Authority's property yard.

C. Salvage: All materials such as hydrants, valves, valve boxes, pipe and fittings, damaged or removed by the Contractor, shall remain the property of the Fairfax County Water Authority and shall be returned to one of the Authority's storage yards as directed by the Engineer, or if the Engineer so directs, materials shall be disposed of by the Contractor at his expense.

PART 2 PRODUCTS

2.01 MANUFACTURERS

A. The Authority publishes an "Approved Products List" which lists, by category, manufacturer's products approved for use in the Authority's system. Manufacturer's products covered by the categories included in this document which are not specifically listed are not approved for use. Copies of this document are available from the Authority's Purchasing Department. Manufacturers not covered under categories included in the Approved Product List are listed herein.

B. Paint Coatings:
   1. KopCoat Company

C. Gasket Lubricants:
   1. Davis and Young Soap Co.

2.02 MATERIALS

A. Materials Furnished by the Authority
   1. Unless otherwise specified, the Authority will furnish the following materials at no additional cost to the Contractor for Authority-financed projects:
      a. Mechanical and push-on joint Gray Iron or Ductile Iron Pipe, fittings and the following appurtenances:
         1) Glands, including restraining glands, gaskets, nuts and bolts for mechanical joints.
         2) Gaskets and lubricants for push-on joints.
      b. Fire hydrants and the following appurtenances:
         1) 6-inch diameter connecting pipe.
      c. Mechanical Joint Valves
         1) Mechanical joint gate valves and valve boxes for diameters 4 inches through 14 inches.
         2) Mechanical joint butterfly valves and valve boxes for direct buried valves 16 inches and greater in diameter.
      d. Flanged valves for installation in vaults or direct bury.
         1) Gaskets and bolts are not supplied by the Authority.
      e. Tapping sleeves and valves.

f. Copper pipe and the following appurtenances for service connections:
   1) Meter boxes and covers
   2) Curb boxes
   3) All other necessary materials with the exception of concrete and gravel.
g. Steel water pipe, fittings and specials.
   1) Steel casing pipe will not be supplied by the Authority.

2. The Contractor shall furnish all other required materials not included on the preceding list at his expense unless otherwise specified.

PART 3 EXECUTION

3.01 EXAMINATION

A. Verify existing field conditions.

B. Perform test pits at all known utility crossings and as required on the Drawings.

C. Inspect water main materials for cleanliness and absence of damage.

3.02 PREPARATION

A. Ductile Iron Pipe and Fittings:
   1. Push-on Joints
      a. Thoroughly clean the groove and bell socket and insert the gasket, making sure that it faces the proper direction and is correctly seated.
      b. After cleaning any dirt or foreign material from the plain end, apply lubricant in accordance with the pipe manufacturer's recommendations.
      c. When pipe is cut in the field, bevel the plain end with a heavy file or an air-driven grinder to remove all sharp edges.
   2. Mechanical Joints: The socket and plain end shall be wiped clean of all sand and dirt and any excess coating in the bell shall be removed. The plain end, bell socket and gasket shall be washed with a soap solution.
   3. Flanged Joints: Rust-prevention grease shall be removed from the flanges using a solvent-soaked rag. The flanges and gasket shall then be wiped clean of all dirt and grit.

3.03 DUCTILE IRON PIPE INSTALLATION

A. Excavating, Trenching and Backfilling: shall be in accordance with Section 02220.

232

1. All Work under this Contract shall be constructed in accordance with the lines and grades shown on the Drawings. The full responsibility for establishing and maintaining alignment and grade shall rest upon the Contractor.
2. The Contractor shall lay all pipe in trenches in accordance with the pipe manufacturer's approved laying schedule, when applicable, and the requirements of Section 02220 and this Section.

B. Pipe Laying:
1. Proper and suitable tools and appliances for the safe and convenient cutting, handling and laying of the pipe and fittings shall be used. The pipe and fittings shall be thoroughly cleaned by power washing before they are laid and shall be kept clean until they are accepted in the completed Work. Special care shall be exercised to avoid leaving bits of wood, dirt and other foreign particles in the pipe. If any such particles are discovered before final acceptance of the Work, they shall be removed and the pipe, valves and fittings replaced at the Contractor's expense. All mains shall be kept absolutely clean during construction. In matters not covered by these Specifications, laying of ductile iron pipe shall meet the requirements of AWWA Standard C600. Exposed ends of uncompleted lines shall be capped or otherwise temporarily sealed with approved watertight bulkheads at all times when pipe laying is not actually in progress.
2. Pipe laid in excavations shall be laid on good foundation, trimmed to shape and, when required, secured against settlement. At joints, enough depth and width shall be provided to permit the making of the joints and the inspection of the bottom half of the joint. All elbows and tees shall be properly backed up and anchored so that there will be no movement of the pipe in the joints due to internal or external pressure. Pipes shall have solid bearing throughout their entire length.
3. The Contractor shall lay all pipe in strict accordance with the manufacturer's recommended procedures. The laying schedule for curves or other pipe deflections shall have a maximum joint deflection eighty per cent of the value shown in the approximate tables in AWWA C600, except in the case of bevel pipe, where the maximum deflection shall be as marked on the pipe. An absolute minimum of three feet of cover in localized areas shall be permitted when approved by the Engineer. Under normal laying conditions, the depth of cover shall be 4 feet.
4. Where pipe is laid in rock trenches, a minimum space of 6 inches below the outside bottom of the pipe shall be filled with selected material in accordance with Section 02220 before the pipe is laid.
5. When special beddings are shown on the Drawings or are ordered by the Engineer, they shall conform to the requirements of Section 02220 of these Specifications.

6. Temporary bulkheads shall be installed at the ends of sections where adjoining water mains have not been completed. All such bulkheads shall be removed when the need for them has passed or when ordered by the Engineer.

C. Joining Pipe and Fittings:
1. When joining pipes and fittings, the Work shall be done in strict accordance with the requirements of AWWA C600, the manufacturer's printed instructions, approved submittals and these Specifications.
2. Push-on joints shall be assembled with general procedure to be as follows:
   a. Prepare pipe and joint as described in this specification Section.
   b. Push the plain end into the bell of the pipe. Keep the joint straight while pushing. Make deflection after the joint is assembled.
3. Mechanical joints shall be assembled with general procedure to be as follows:
   a. Prepare the socket and plain end as described in this specification section.
   b. Place the gland on the plain end with the lip extension toward the plain end of the pipe, followed by the gasket with the narrow edge of the gasket toward the end of the pipe.
   c. The pipe shall be pushed into the bell socket and the gasket pressed firmly and evenly around the entire socket. The gland is then pushed up to the bell and centered on the pipe. Glands may require a wedge under the top side to assist in centering the gland lip against the gasket.
   d. The bolts shall then be inserted and tightened with the fingers until all are even. A ratchet wrench shall be used to complete the tightening of the bolts, care shall be exercised to tighten the opposite nuts to keep the gland square with the socket and the bolt stress evenly distributed. The following torque shall be applied:

Bolt Size	Torque
5/8-inch	45-60 Ft. Lb.
3/4-inch	75-90 Ft. Lb.
1-inch	100-120 Ft. Lb.
1 1/4-inch	120-150 Ft. Lb.

4. Flanged joints: shall be assembled with general procedure to be as follows:
   a. Prepare flanges in accordance with the requirements of this specification Section.
   b. The flanges shall be accurately aligned, using a spirit level, and pipe properly supported before the gasket and bolts are inserted. The rubber gasket shall be carefully placed to ensure full flow and proper sealing of the joint.

c. Bolt threads shall be given a light coat of thread lubricant and then inserted and the nuts turned up by hand. Bolts shall then be pulled up with a wrench employing the crossover method. Applied torques shall be in strict accordance with the manufacturer's requirements.

5. Mechanically Coupled Joints: Mechanical couplings shall be installed in strict accordance with the manufacturer's instruction and in a manner to ensure permanently tight joints under all reasonable conditions of expansion, contraction, shifting and settlement. Mechanical couplings and harnessed mechanically coupled joints installed underground shall be coated as specified in this Section.

D. Ductile Iron Pipe on Supports:

1. Whenever pipe is laid on supports, the saddle angle of the support shall not be less than 120 degrees.
2. Whenever pipe is laid on supports, the minimum axial bearing length of the supports shall be in accordance with the following table:

Pipe Diameter	Axial Bearing Length
3 - 8 inch	6 inches
10 - 14 inch	12 inches
30 - 54 inch	18 inches

E. Pipe Cradles and Encasements: Where concrete cradles or encasements are required, they shall be constructed in accordance with Section 03300 of these specifications, and the Drawings.

F. Thrust Restraints: Thrust Restraints including anchors, strapping or other approved restraining devices shall be in accordance with Section 02669 of these specifications, and the Drawings.

G. Coatings: The exterior surfaces of all buried bolts, nuts, couplings, harness tie rods, saddles and special anchorage materials shall be cleaned and coated with two coats of KopCoat Bitumastic No. 50, 15 mils per coat for a total thickness of 30 mils. The first coat shall be spray applied, the second coat may be spray or brush applied.

H. Temporary Bulkheads: At the ends of sections where adjoining pipelines have not been completed and are not ready to be connected, install temporary, externally braced test plugs approved by the Engineer. All such externally braced test plugs shall be removed when the need for them has passed or when ordered by the Engineer.

I. Pipe Installed Within Structures and Concrete Encasements: Where temporary support are used, they shall be sufficiently rigid to prevent

shifting of the pipe. No reinforcing in structure or concrete encasements shall touch the pipe.

J. Sanitary Sewer Crossings:
   1. Maintain required separation between water and sewer facilities in accordance with Virginia State Board of Health "Water Works Regulations".
   2. Provide concrete pier supports for existing Sanitary sewer pipe crossing over the water main in accordance with the Drawings.

K. Surface Water Crossing: Install surface water crossings in accordance with the Virginia State Board of Health "Water Works Regulations" and the following:
   1. No above-water crossings will be permitted.

3.04 VALVES AND HYDRANTS

A. Joints: Joints shall be made up in accordance with the procedures outlined in this specification Section.

B. Valves:
   1. Valves shall be carefully erected in their respective positions free from distortion and strain with operators vertical unless otherwise shown on the Drawings. The valves shall be placed and left in satisfactory operating condition. Restrain valves as required.
   2. Unless otherwise shown or specified, direct burial valves and valves in vaults or manholes shall have 2-inch square operating nuts. If the operating nut is 4 feet or more below grade, it shall be provided with extended shafts and 2-inch operating nuts extending to 3 feet below grade.
   3. Natural rubber seat rings shall be coated with an approved opaque material which shall protect the rubber from attack by ozone and other deleterious materials.
   4. Rubber seated valves, which are to be stored for longer than three months shall be partially opened to prevent damage or permanent deformation to the seat ring.
   5. Valve boxes shall be adjusted with the tops at the proper grade. Valve boxes in unpaved areas shall be installed with concrete in accordance with the Drawings. The top section of the valve box will overlap the lower section with a minimum lap of 2 inches.

C. Hydrants: Hydrants shall stand plumb and shall have their hose nozzles parallel to the water main and their pumper nozzles facing the street or as directed by the Engineer. The hydrant shall to be turned on its base in order to have the pumper nozzles facing the street.

3.05 CONNECTIONS TO THE WATER SYSTEM

A. General: The Contractor shall connect the pipelines to existing water mains and make provisions for future connections, as shown on the Drawings. If system shutdown is necessary, the Contractor shall give the Engineer sufficient notice before these operations are to be performed so that advance notice may be given to the affected customers.

B. The Authority will close all valves in making shutdown and open all valves in restoring pressure to the existing main and initiating pressure in the new installation. Connections to water mains shall be made by the Contractor only after complete preparation for such Work has been made, in order that the duration of the shutdown may be as short as possible.

C. Make connections to existing mains in accordance with approved submittals.

D. Where existing mains are provided with fittings for the purpose of connecting to the new main, the Contractor shall remove the plugs or bulkheads, clean the ends, prepare them for connection to the new pipeline, and make the new joint.

E. The water released by cutting or opening existing mains shall be removed and the excavation kept dry until all necessary Work within the excavation has been completed.

3.06 SERVICE, AIR RELEASE AND BLOW OFF CONNECTIONS

A. Service Connections: 1-inch service connections shall be installed by the Contractor in the Authority's retail service area as required by the Drawings or the Engineer.

1. The connections shall be made by tapping the water main with a 1-inch corporation stop at the top center position on the pipe. A 1-inch elbow shall be attached thereto and the 1-inch copper tube connected to the elbow. Allowance for any possible movement of the water main or service piping at the tap shall be accomplished by making a half loop in the copper tube and firmly compacting the backfill under this loop. The tube shall be extended to the concrete curb which the tube shall be passed under and terminated at a 1-inch curb stop or meter assembly as directed by the Engineer. Care shall be used to prevent the tube from crimping, binding or twisting. The concrete curb shall not be removed or damaged. Where required, a curb box shall be placed vertically and aligned over a curb stop for proper access and, where required, a meter box shall be placed around a meter assembly as shown on the Drawings.
2. A minimum of 3 feet of cover shall be placed over the service tube.

B. Air Release or Blowoff Connections: All requirements for the installation of service connections are required for manual air release or blowoff connections, 2 inches in diameter or smaller. Copper tube for air release connections shall terminate at a curb stop with a curb box.

C. Provide approved tapping saddles where pipe walls are insufficient to embed three threads in metal.

3.07 LEAKAGE TESTS

A. Perform leakage tests in accordance with Section 02676. Make necessary repairs and repeat tests until required results are obtained.

3.08 DISINFECTION

A. Disinfect finished water mains and appurtenances in accordance with Section 02675. Repeat disinfection and testing until required results are obtained.

3.09 DISPOSAL OF ASBESTOS CEMENT PIPE MATERIALS

A. The Contractor shall double bag or wrap asbestos contaminated material, seal and mark containers and dispose of material at an authorized disposal site in accordance with federal, state and local requirements. The Contractor shall provide the Engineer with signed manifest or other proof that asbestos contaminated material has been disposed of legally.

END OF SECTION

SECTION 02669

THRUST RESTRAINTS

PART 1 GENERAL

1.01 SECTION INCLUDES

A. Concrete Thrust Anchors

B. Concrete Thrust Collars

C. Mechanical Joint Restraints

1.02 PRODUCTS FURNISHED BUT NOT INSTALLED UNDER THIS SECTION

A. Restraining Glands

1.03 SUBMITTALS

A. Submit material lists and calculations for thrust restraints not shown or different from that shown on the Drawings.

B. Submit description and installation instructions for restraining glands.

1.04 UNIT PRICES

A. Refer to Section 01025 - Measurement and Payment

1.05 REFERENCES

A. ASTM A325 Specification for High Strength Bolts for Structural Steel Joints

B. ASTM A536 Specification for Ductile Iron Castings.

C. AWWA C111 Rubber Gasket Joints for Ductile Iron Pressure Pipe and Fittings.

D. AWWA C153 Ductile Iron Compact Fittings, 3 Inch through 16 Inch, for water and other liquids.

PART 2 PRODUCTS

2.01 MANUFACTURERS

A. EBAA Iron, Inc.

2.02 MANUFACTURED UNITS

A. Restraining Glands: Mechanical joint restraint shall be provided in the design of the follower gland and shall include a restraining mechanism which, when actuated, imparts multiple wedging action against the pipe, increasing its resistance as the pressure increases. Flexibility of the joint shall be maintained after burial. Glands shall be manufactured of ductile iron conforming to ASTM A536. Restraining devices shall be manufactured of ductile iron, heat treated to a minimum hardness of 370 BHN. Dimensions of the gland shall be such that it can be used with the standardized mechanical joint bell and tee-head bolts conforming to AWWA C111 and AWWA C153. Twist-off nuts shall be used to ensure proper actuating of the restraining devices. The mechanical joint restraining device shall have a working pressure of at least 250 psi with a minimum safety factor of 2:1 and shall be EBAA Iron, Inc., MEGALUG™.

2.03 MIXES

A. Concrete for Thrust Collars: Provide concrete in accordance with the requirements of Section 03300.

B. Concrete for Thrust Anchors: Provide concrete in accordance with the requirements of Section 03300.

PART 3 EXECUTION

3.01 INSTALLATION

A. Provide thrust restraints shown or otherwise necessary to resist movement in new or existing water mains.

3.02 CONCRETE THRUST ANCHORS

A. Provide concrete thrust anchors at all bends, tees, plugs, caps, and hydrants, and welded outlets.

B. Dimensions: Refer to the Drawings for dimensions of thrust anchors.

C. Installation: Bearing area for thrust anchors shall be against undisturbed earth. The face of the excavation shall be flat and at the proper angle to the fitting.
   a. Install thrust anchors such that pipe and fitting joints are accessible for repair.
   b. Brace the bowl of each hydrant against the required area of unexcavated earth at the end of the trench with concrete thrust anchor.

3.03 CONCRETE THRUST COLLARS

A. Provide concrete thrust collars at the locations shown on the Drawings.

B. Dimensions: Refer to the Drawings for the dimensions of thrust collars.

C. Reinforcement: Provide reinforcing steel where shown on the Drawings and in accordance with Section 03300.

D. Installation: Provide and place concrete in accordance with requirements of Section 03300.

3.04 CONCRETE

A. Curing: Cure all concrete thrust anchors and thrust collars for a minimum of seven days prior to pressure testing.

B. Backfilling: Backfill around concrete thrust collars and concrete thrust anchors according to the requirements of Section 02220 - Excavating, Backfilling and Compacting, and the following:
   1. Do not backfill thrust collars or thrust anchors until a minimum of four hours has elapsed.

3.05 RESTRAINING GLANDS

A. Install mechanical joint restraint in accordance with the manufacturer's instructions.

END OF SECTION

SECTION 02675

DISINFECTION OF WATER DISTRIBUTION SYSTEMS

PART 1 GENERAL

1.01 SECTION INCLUDES

A. Disinfection: Disinfection of potable water distribution and transmission systems.

B. Testing: Testing and reporting results.

1.02 UNIT PRICES

A. Disinfection: No separate payment shall be made for disinfection of water mains and appurtenances.

1.03 REFERENCES

A. AWWA B300 - Standard for Hypochlorites.

B. AWWA B301 - Standard for Liquid Chlorine.

C. AWWA C651 - Standards for Disinfecting Water Mains.

D. Waterworks Regulations - Commonwealth of Virginia/State Board of Health.

1.04 SUBMITTALS

A. Test Reports: Indicate results comparative to specified requirements.

1.05 PROJECT RECORD DOCUMENTS

A. Record Documents: Submit under provisions of Section 01700, Contract Closeout.
   1. Disinfection report; record:
      a. Type and form of disinfectant used.

b. Date and time of disinfectant injection start and time of completion.
c. Test locations.
d. Initial and 24 hour disinfectant residuals in ppm.
e. Date and time of flushing start and completion.
f. Disinfectant residual after flushing in ppm for each outlet tested.

2. Bacteriological report; record:
   a. Date issued, project name.
   b. Time and date of water sample collection.
   c. Name of person collecting sample.
   d. Test location, sample source.
   e. Initial and 24 hour disinfectant residuals in ppm.
   f. Coliform bacteria test results.
   g. Certification that water conforms, or fails to conform, to bacterial standards of Virginia Department of Health and the Authority.

1.06 QUALITY ASSURANCE

A. Performance Standard: Work shall be performed in accordance with the Virginia State Board of Health "Water Works Regulations",AWWA C651, and as modified herein.

B. Bacteria Tests will be performed by the Authority laboratory.

PART 2 PRODUCTS

2.01 DISINFECTION CHEMICALS

A. Chemicals: AWWA B300 Hypochlorite, AWWA B301 Liquid Chlorine.

2.02 OTHER PRODUCTS

A. Corporation Stops: Mueller H-10013 Corporation Stops

PART 3 EXECUTION

3.01 EXAMINATION

A. Cleaning and Inspection: Verify that the water main has been cleaned and inspected.

3.02 DISINFECTION

A. Disinfection of Water Mains Under 20 Inches: Disinfect water mains in accordance with AWWA C651 and the Commonwealth of Virginia/State Board of Health Waterworks Regulations.

1. Filling and Contact: When installation has been completed, the main shall be filled with water at a rate such that water within the main will flow at a velocity no greater than 1 ft/s. The Authority requires about two turns of the source valve. The Engineer will be present during this procedure to verify that the Contractor is adhering to this requirement.

B. Disinfection of Water Mains 20 Inches and Greater: Disinfection of water mains 20 inches and greater in diameter shall be performed in the following manner:
   1. Continuous Feed Method: For water mains 20 inches and greater in diameter, the Contractor shall follow the requirements of Commonwealth of Virginia/State Board of Health Waterworks Regulations and AWWA Standard C651 for the continuous feed method except that the method shall give a 24 hour chlorine residual of not less than 25 mg/l.

C. Disinfectant Level: Disinfectant level should be checked and maintained in the following manner:
   1. Chlorine Residual: A chlorine residual shall be taken at the farthest point from the location where water is introduced when the new water main is charged. The minimum reading is to be 25 mg/l, which is required for proper disinfecting. If less than 25 mg/l are present, an additional chlorine solution is to be added to obtain the 25 mg/l before the water main is pressure tested.
   2. Disinfection Time: Allow the 25 mg/l to sit for a minimum of 24 hours before pressure testing, but no longer than 5 days. The Engineer will verify this.
   3. Precautions: Precautions shall be taken to assure that air pockets are eliminated. This water shall remain in the pipe for at least 24 hours. If the water temperature is less than 41F(5C), the water shall remain in the pipe for at least 48 hours. Valves shall be positioned so that the strong chlorine solution in the main being disinfected shall not flow into water mains in active service.

D. Leakage Testing: Pressure test water main in accordance with Section 02676.

E. Flushing: After a satisfactory pressure test is performed, the water main is to be flushed as shown in the Drawings and in the following manner:
   1. General: Let water flow at the maximum rate possible until it is clear (<1.0 NTU) and a chlorine residual is obtained which is comparable to the source water. The Engineer will advise the Contractor on how long to flush.

a. The Engineer will be present at the start of the flushing process to verify procedures and to notify the Authority of the location of flushing.

2. Flushing from fire hydrants:
   a. Open fire hydrant valve, street valve and source valve completely for free discharge. Use the diffuser if necessary.
   b. If a fire hydrant cannot provide for a free discharge even with a diffuser, either install a hand control valve on the 2 1/2-inch hose connection (with fire hose if necessary) or use the fire hydrant street valve to control flow. Do not use the fire hydrant valve to control flow.
3. Flushing from Blow-Offs: For blow-offs, insert the 2-inch connector pipe with adapter and attach hose if required, and open blow-off valve to control flow.
4. Time Requirements: If over a week has elapsed between the pressure test and sampling, there should be very thorough flushing. If the time period has been in excess of a month or transported water was utilized for pressure testing, special procedures may be required at no additional cost to the Authority.

3.03 QUALITY CONTROL

A. Water Samples: In accordance with the Virginia State Board of Health "Water Works Regulations", bacteriological samples shall be collected at regular intervals not to exceed 2000 feet. Two negative (passing) samples collected at least 24 hours apart for each sample location are required for acceptance of the water main.
   1. Scheduling: After the water main has been pressure tested, the Engineer, while the Contractor's representative is present, will contact the Authority's Construction Branch to schedule the samples. Samples will not be scheduled in advance of the pressure test.
   2. Cancellations: Cancellations or sample failures will be scheduled in turn with original samples.
   3. Unsatisfactory Sample: If the samples fail, the Contractor shall reschedule and repeat the flushing and sampling process.
   4. Additional Disinfection: If the second set of samples fail, the water main shall be disinfected again with a chlorine solution and shall be allowed to sit for a minimum of 24 hours. The flushing and sampling process shall then be repeated.

B. Failure to Meet Quality Standards
   1. Water Quality: Should the initial treatment, as determined by the laboratory tests, fail to result in a water comparable in quality to the water served to the public from the existing water supply system,

disinfection and flushing shall be repeated until satisfactory results are obtained.

2. Cost of Additional Disinfection: Any labor, materials or equipment needed to rechlorinate or reflush water main shall be furnished by the Contractor at no additional cost to the Authority.

3.04 PROTECTION

A. Discharge of Disinfected Water:

1. Discharge: Neutralize chlorinated water prior to discharging. Disinfected water with a free chlorine residual in excess of 2.0 mg/l shall not be introduced into the Authority's distribution system.
2. Controls: The Contractor shall provide siltation control as required to protect against soil erosion in accordance with Section 02270 Erosion Control.
3. Responsibilities: The Contractor shall be responsible for any damage to vegetation, trees, streams, ponds, and lakes caused by the discharge of chlorinated water. Damages or injury to customers served by the Authority resulting from introduction of disinfected water into the system shall be the responsibility of the Contractor and shall be remedied at his expense. Guidelines for dechlorination are explained in AWWA Standard C651 - "Disinfecting Water Mains."

END OF SECTION

SECTION 02676

LEAKAGE TESTS

PART 1 GENERAL

1.01 SECTION INCLUDES

A. Hydrostatic pressure and leakage tests

1.02 UNIT PRICES

A. No separate payment shall be made for hydrostatic pressure and leakage testing

1.03 SUBMITTALS

A. Submit detailed description of testing program including but not limited to the following:
   1. Schedule of test sections and piezometric test elevations if different from that shown on the Drawings.
   2. Type and location of bulkheads; provisions for thrust restraint.
   3. Proposed sources of water and points of introduction into the pipeline.
   4. Proposed equipment and methods for admitting test water and filling and dewatering the pipeline.
   5. Proposed sequence of activities.
   6. Proposed methods and details for testing pipe, joints, closures, etc., installed after completion of hydrostatic tests.

PART 2 PRODUCTS

2.01 MEASURING DEVICES

A. The Authority will furnish meters and gauges for testing purposes.

PART 3 EXECUTION

3.01 GENERAL

A. The water mains shall be tested for leakage by the Contractor at his own expense in the presence of the Engineer. All tests shall be conducted in a manner to minimize as much as possible any interference with the

Contractor's Work or progress. A maximum of 2,500 linear feet of water main may be tested at one time.

B. Each section of water main between adjacent butterfly valves shall be tested separately. The maximum differential pressure across any butterfly valve during testing shall not exceed the test pressure specified by the Engineer.

C. The Contractor shall notify the Engineer when the Work is ready for testing and tests shall be made as soon thereafter as practicable under the direction of the Engineer. Personnel for reading meters, gauges or other measuring devices will be furnished by the Engineer, but all other labor, equipment, water and materials shall be furnished by the Contractor, unless otherwise specified.

D. Testing of the pipelines shall not be made until at least 7 days have elapsed after all concrete thrust blocking has been installed.

E. The Authority reserves the right to check the completed pipeline for vertical alignment prior to filling with water and testing. The Contractor shall not allow water in any pipelines without the express written permission of the Engineer.

F. All air valves shall be installed as indicated on the Drawings and individually checked for proper operation prior to filling the water main for testing. If for any reason it is necessary to drain the water main, the Contractor shall take all precautions required to ensure the safety of personnel entering and inspecting the water main. When draining the water main, all air valves shall be rechecked for proper operation. This is required to avoid the formation of a vacuum lock which could prevent the water from properly draining and become a hazard to men working within the pipeline if released. Pipelines containing large orifice valves shall be filled at a maximum rate of 1 foot-per-second.

G. Perform disinfection and bacteriological sampling in accordance with Section 02675.

3.02 TESTING

A. The pipeline shall be filled with water in accordance with Section 02675 for a minimum of 24 hours immediately prior to testing for leakage.

B. The piping shall be tested under the greater of a hydrostatic pressure of 150 psi or 125% of the maximum expected working pressure at the high point of the line unless otherwise shown or directed by the Engineer. Air

shall be purged from the pipeline through taps in the pipe prior to testing. The test pressure shall be applied to the piping by means of a hand pump or other approved method and shall be maintained for minimum of two hours. The test pressure shall not vary by more than plus or minus 5 psi.

C. The leakage as determined by the above test shall not exceed the allowable leakage as given by the following formula:

$$L = \frac{SD\,(P)^{0.5}}{133{,}200}$$

In this formula "L" equals the allowable leakage, in gallons per hour; "S" is the length of pipe tested in feet; "D" is the diameter of the pipe, in inches; and "P" is the average test pressure during the leakage test, in psi gauge. (By this formula, the allowable leakage is 3.31 gallons per hour or 6.62 gallons for a two-hour test period on a 24-inch pipeline 1500 feet in length at 150 psi test pressure).

3.03 REPAIRING LEAKS

A. When leakage occurs, defective pipe, valves, fittings, appurtenances or joints shall be located and repaired at the expense of the Contractor. If the defective portions cannot be so located, the Contractor, at his own expense, shall remove and reconstruct as much of the original Work as necessary to obtain a water main that does not exceed the allowable leakage upon retesting.

END OF SECTION

SECTION 02930

LAWNS AND GRASSES

PART 1 GENERAL

1.01 SECTION INCLUDES

A. Seeding and Fertilizing

B. Sodding

1.02 UNIT PRICES

A. Refer to Section 01025 - Measurement and Payment and the following:

B. Limits for Payment: Payment for sodding and for seeding and fertilizing shall be made to the limits shown on the Drawings, or the following:
   1. 4-inch through 20-inch diameter water mains: Payment shall be limited to the area within lines equidistant and parallel to the water main centerline encompassing a total width 48 inches greater than the inside diameter of the water main.
   2. 24-inch through 36-inch diameter water main: Payment shall be limited to the area within lines equidistant and parallel to the water main centerline, encompassing a total width 60 inches greater than the inside diameter of the water main.
   3. Vaults, manholes, and other special structures: Payment shall be limited to an area 18 inches beyond the outside limits of the structure.
   4. Payment limits in easement areas if different than the preceding will be determined by the Engineer at the time of Construction.

1.03 REFERENCES

A. Erosion and Sediment Control Manual of Fairfax County, Virginia.

1.04 SUBMITTALS

A. Certified Analysis: Provide a certified analysis of fertilizer proposed for use.

1.05 REGULATORY REQUIREMENTS

A. Seeding and Mulching Requirements: Seeding and mulching procedures shall conform with the applicable provisions of the Erosion and Sediment Control Manual of Fairfax County.

1.06 STORAGE AND PROTECTION

A. Sod: Store sod in piles of tight rolls or layers laid grass to grass or roots to roots. Sprinkle sod piles with water and cover with straw or moist burlap. Keep sod moist. Sod which is allowed to dry out will be rejected by the Engineer.

PART 2 PRODUCTS

2.01 MATERIALS

A. Seed: Provide grass seed mixture composed of 70% Kentucky 31 tall Fescue and 30% common Kentucky Blue Grass. Under no circumstances shall rye grass be added to the grass mixture. Seed shall be mixed by the seedman to the satisfaction of the Engineer. Seed analysis shall be marked on the containers. The seed components shall be free of noxious weed seeds and shall have not less than the following purity and germination:

	Percent Purity	Percent Germination
Kentucky Blue Grass	85	75
Kentucky Fescue	98	90

B. Sod: Sod shall be well rooted, healthy, pasture type sod, reasonably free from weeds and selected from areas approved by the Engineer. Cut sod into square or rectangular sections of equal width and of a size that will permit them to be lifted without breaking. Cut to a depth approximately equal to the depth of the roots, but in no case shall the depth be less than 1 inch.

1. Sod may be provided by the Contractor in place of seeding at no additional cost to the Authority.

C. Fertilizer: Provide a commercial fertilizer mixture for use on lawn areas which provides a complete plant food and which contains nitrogen, phosphorus and potash in the proportions of 5% water soluble nitrogen, 10% available phosphorous, and 5% water soluble potash.

D. Topsoil: Strip suitable topsoil from excavations and stockpile for reuse in accordance with Section 02220. Supply additional material required at no cost to the Authority. This soil shall be friable loam, and shall be obtained from naturally well-drained areas. It shall be free from subsoil, clay lumps, stones, stumps, roots, brush, weeds, litter, trash or other harmful material.

PART 3 EXECUTION

3.01 PREPARATION

A. Topsoil: Upon completion of construction in the area to be seeded or sodded, spread a uniform layer of topsoil over the compacted subgrade.
   1. Depth of Topsoil: Provide a minimum 4-inch topsoil layer for areas to be seeded and a minimum 3-inch layer of topsoil for areas to be sodded.
   2. Finish grading of topsoil: Compact topsoil with an approved roller weighing between 250 and 750 pounds.
      a. Provide finished surface without irregularities to the grade shown on the Drawings or, if not shown, the grade which conforms to the existing finished grade.
      b. In areas to be sodded, loosen soil to a minimum depth of 2 inches, restore to a uniform grade and sprinkle with water.

B. Fertilizer: Spread fertilizer uniformly, by means of a mechanical spreader, at the rate of 50 pounds per 1000 square feet. Apply fertilizer at least 24 hours prior to seeding or sodding.

3.02 INSTALLATION

A. Seeding: Grass seed shall be sown by a mechanical seeder operated in two directions. Total application shall be 5 pounds to 1,000 square feet. Rake seed lightly into the surface and roll with a light, hard roller. Sprinkle seeded areas with a fine spray in such a manner as not to wash out the seed. Use care in raking not to destroy the finished grade nor to disturb uniform distribution of seed. Perform seeding on a still day and only with the approval of the Engineer.

B. Hydroseeding: Application of seed, lime or fertilizer by Hydroseeder will be permitted.

C. Sodding: Provide sod where shown on the Drawings. Place sod by hand with close joints. Do not overlap. Fill all gaps with sod and after the sections are set, fill all joints with loamy topsoil. Following sodding operation, sprinkle area with water and roll or tamp to incorporate sod with sod bed in order to assure a tight joint between strips.

1. Sodding on Slopes: Anchor sod placed on slopes steeper than a 2:1 in place by stakes driven flush with the surface after the tamping and rolling have been completed. Stakes shall be at least 8 inches long and have a cross-sectional area not less than 1 square inch and shall be placed in such a manner as to hold the sod securely in place.

3.03 PROTECTION

A. General: The Contractor shall be responsible for protecting and maintaining sodded and seeded areas until acceptance by the Authority.

B. Protection against Washouts: Protect seeded areas against washouts by covering the area with burlap or straw or by other approved means. Regrade and reseed washouts until a good sod is established, to the Engineer's satisfaction.

C. Watering: Keep sodded or seeded areas sufficiently moist in order to maintain and promote life and growth of the sod or seed until the Work is accepted.

END OF SECTION

APPENDIX A
FAIRFAX COUNTY WATER AUTHORITY
STANDARD DETAILS

List of Drawings

No.	Title
1	Sanitary Sewer Protection - Water Main Crossing under Sewer
2	Sanitary Sewer Protection - Water Main Crossing over Sewer
3	Concrete Thrust Anchor
4	Standard Hydrant Installation
5	Air Release and Blow-Off Piping - Ductile Iron Pipe 20" and Larger
6	Standard Hydrant (Greater than 8' Bury)
7	Methods of Flushing Fire Hydrants and Blow-Offs
8	Hydrant Protection - Guard Posts Detail
9	1" - 2" Air Release w/Guard Posts Detail
10	2" Blow-Off Detail
11	1" Service Connection with Water Meter
12	Corrosion Control Thermite Welds
13	Corrosion Control Bonded Joints
14	Corrosion Control Miscellaneous Detail
15	Corrosion Control Test Station Installation
16	Corrosion Control Test Station Wiring Type T - Standard, Type I - Insulated Flange
17	Corrosion Control Test Station Wiring Type F - Foreign Pipeline Crossing
18	Corrosion Control Test Station Wiring Type C - Trenchless Crossing
19	Trenchless Crossing Installation

APPROVALS			REVISIONS			
	INITIALS	DATE	NO.	DESCRIPTION	INITIALS	DATE
CHECKED BY	RJZ	12/20/94				
CHECKED BY	MIS	12/20/94				
APPROVED BY	RJE	12/20/94				

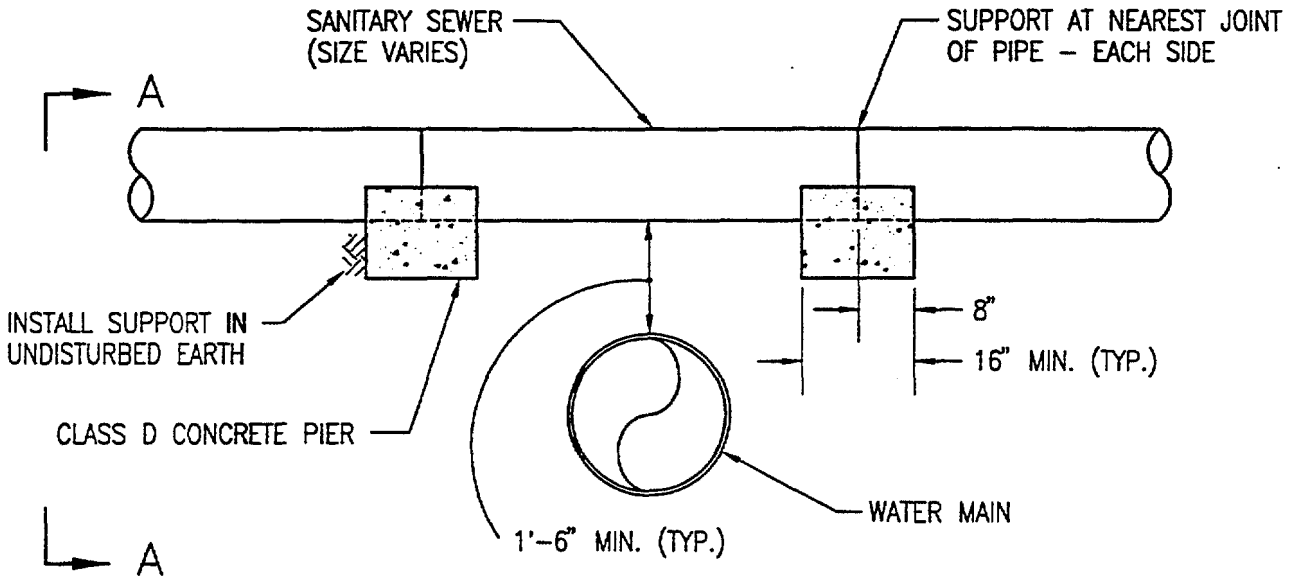

ELEVATION

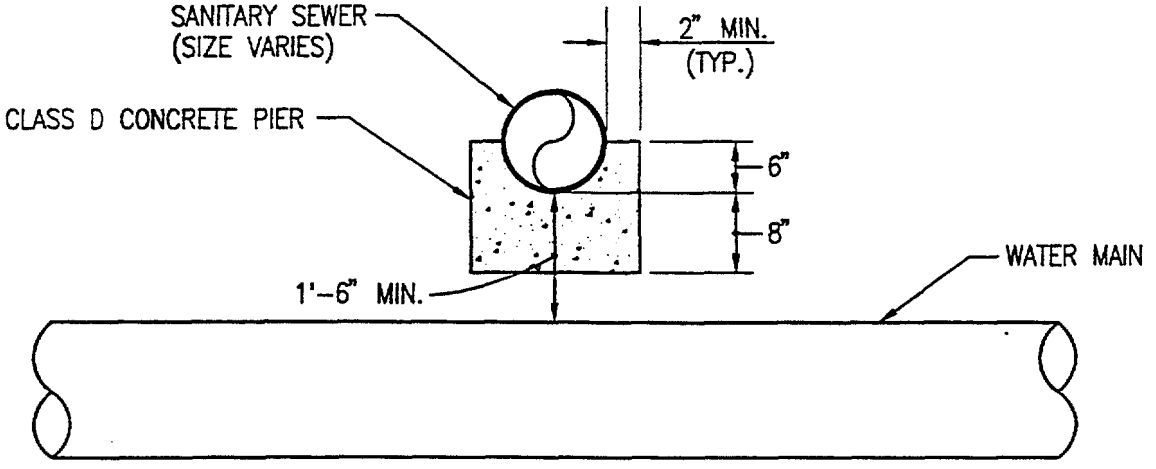

SECTION A–A

CONCRETE PIER DETAIL

FAIRFAX COUNTY WATER AUTHORITY STANDARD DETAILS		SCALE NOT TO SCALE
SANITARY SEWER PROTECTION WATER MAIN CROSSING UNDER SEWER CONTRACT ITEM 3		DRAWING NO. 1 FILE: SD9401

925

APPROVALS			REVISIONS			
	INITIALS	DATE	NO.	DESCRIPTION	INITIALS	DATE
CHECKED BY	RJZ	12/20/94				
CHECKED BY	MIS	12/20/94				
APPROVED BY	RJE	12/20/94				

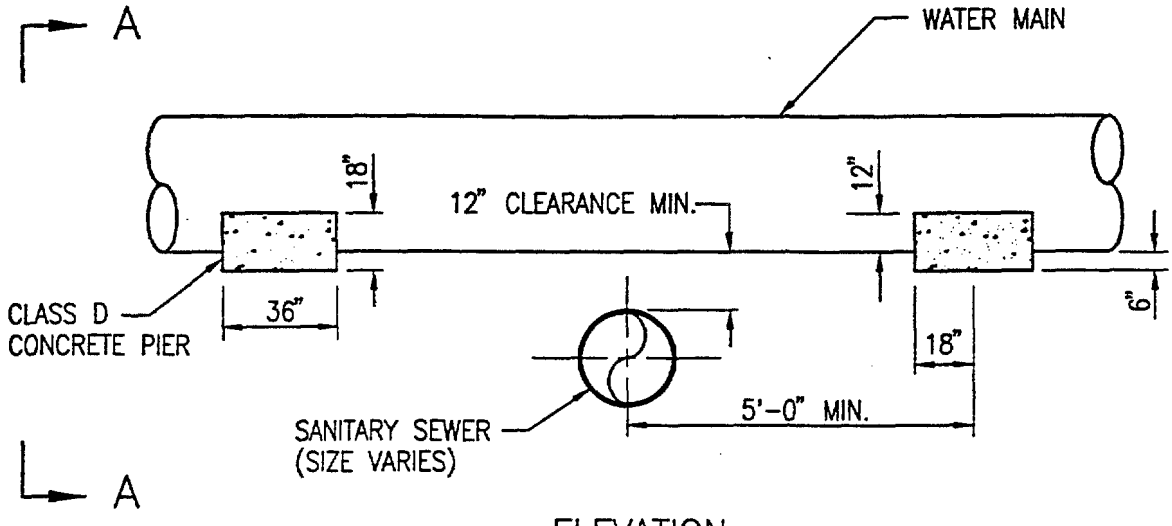

ELEVATION

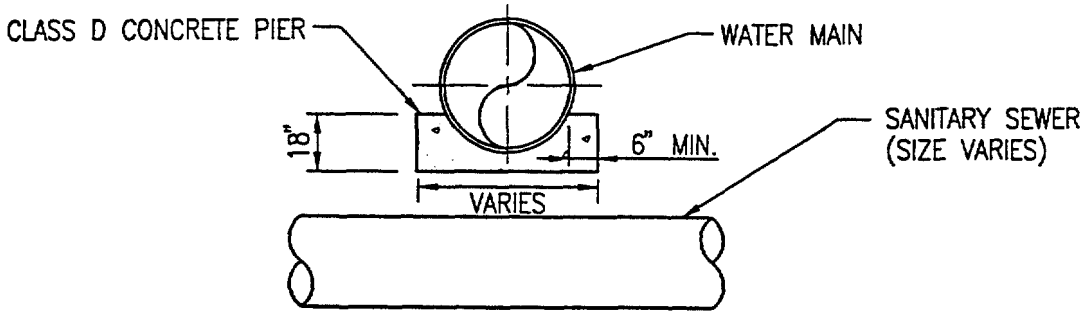

NOTE:
PROPOSED PIERS TO BE BUILT
ON UNDISTURBED EARTH

SECTION A–A

CONCRETE PIER DETAIL

FAIRFAX COUNTY WATER AUTHORITY STANDARD DETAILS		SCALE NOT TO SCALE
SANITARY SEWER PROTECTION WATER MAIN CROSSING OVER SEWER CONTRACT ITEM 3		DRAWING NO. 2 FILE: SD9402

226

APPROVALS	INITIALS	DATE
CHECKED BY	RJZ	12/20/94
CHECKED BY	MIS	12/20/94
APPROVED BY	RJE	12/20/94

REVISIONS			
NO.	DESCRIPTION	INITIALS	DATE

PIPE SIZE INCHES	DEGREE OF BEND	MINIMUM CONCRETE ANCHOR BLOCK DIMENSIONS–FEET WORKING PRESSURE										VOLUME OF CONCRETE CU. YD. (1)
		75 PSI		100 PSI		125 PSI		150 PSI		175 PSI		
		L	H	L	H	L	H	L	H	L	H	
6	90	2.5	1.0	2.5	1.5	2.0	2.0	2.5	2.0	3.0	2.0	0.24
	45	1.5	1.0	2.0	1.0	2.0	1.0	2.5	1.0	2.0	1.5	0.13
	22 1/2	1.0	1.0	1.0	1.0	1.0	1.0	1.5	1.0	1.5	1.0	0.06
8	90	2.0	2.0	2.5	2.5	3.0	2.5	4.0	2.0	4.0	2.5	0.40
	45	2.5	1.0	2.0	1.5	2.0	2.0	2.5	2.0	2.5	2.0	0.19
	22 1/2	1.5	1.0	1.5	1.0	2.0	1.0	2.5	1.0	2.0	1.5	0.10
12	90	3.0	3.0	4.0	3.0	5.0	3.0	5.0	4.0	5.5	4.0	0.78
	45	2.5	2.0	3.5	2.0	4.0	2.5	4.0	2.5	4.0	3.0	0.45
	22 1/2	2.5	1.0	2.5	1.5	2.5	2.0	2.5	2.0	3.0	2.0	0.24
16	90	5.0	3.5	5.5	4.0	6.0	4.5	7.5	4.5	7.5	5.0	1.43
	45	4.0	2.5	4.0	3.0	5.0	3.0	5.0	3.5	5.0	4.5	0.78
	22 1/2	2.5	2.0	3.0	2.0	3.0	2.5	3.0	3.0	4.0	3.0	0.39
20	90	5.5	4.5	6.5	5.5	7.5	5.5	8.5	6.0	9.5	6.0	1.99
	45	4.0	3.5	5.0	4.0	5.5	4.0	6.0	4.5	7.0	4.5	1.11
	22 1/2	3.0	2.5	3.5	3.0	4.0	3.0	4.5	3.0	5.5	3.0	0.58
24	90	6.5	5.5	8.0	6.0	9.5	6.5	11.0	6.5	13.0	6.5	2.37
	45	5.0	4.0	5.5	5.0	7.5	4.5	7.0	5.5	9.0	5.0	1.36
	22 1/2	3.5	3.0	4.0	3.5	5.0	3.5	5.0	4.0	6.0	4.0	0.69

(1) Approximate volume of concrete required for various size bends at 100 psi working pressure and minimum block thicknesses of 1'–9" for 6", 8", 12", and 16" pipe, 1'–6" for 20" pipe, and 1'–4" for 24" pipe.

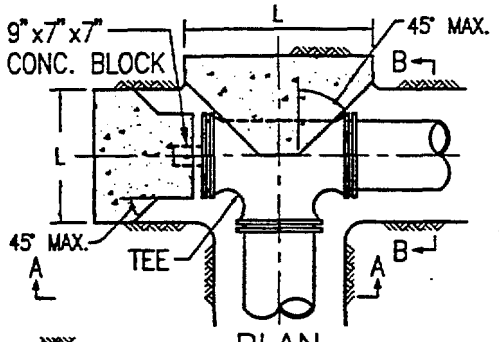

PLAN

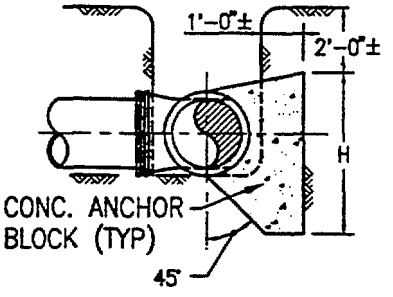

SECTION B–B

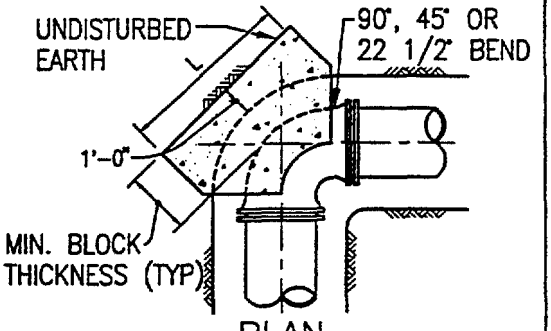

PLAN

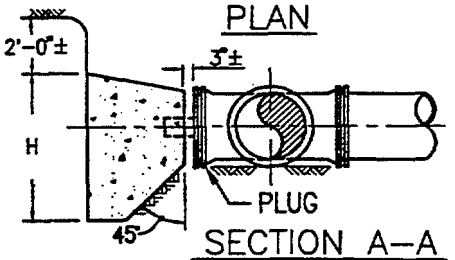

SECTION A–A

GENERAL NOTES

A. The above table is based on 2000 psf soil bearing capacity, R=2PA sin ø/2 and for a test pressure = 1.5 x working pressure.

B. Concrete Anchor Block dimensions for tees to be same as for 90° bends.

C. Anchor Block Design for pipe larger than 24" shall be reviewed on an individual basis by the Authority's engineer.
Height of Concrete Anchor Block above pipe centerline is 1/3 the H dimension.

FAIRFAX COUNTY WATER AUTHORITY
STANDARD DETAILS

SCALE
NOT TO SCALE

CONCRETE THRUST ANCHOR

CONTRACT ITEM 24

DRAWING NO.
3

FILE: SD9403

227

APPROVALS			REVISIONS			
	INITIALS	DATE	NO.	DESCRIPTION	INITIALS	DATE
CHECKED BY	RJZ	12/20/94				
CHECKED BY	MIS	12/20/94				
APPROVED BY	RJE	12/20/94				

NOTE:
HYDRANT LOCATION IN REGARD TO FACE OF CURB. SEE FAIRFAX COUNTY STANDARDS. (PUBLIC FACILITIES MANUAL)

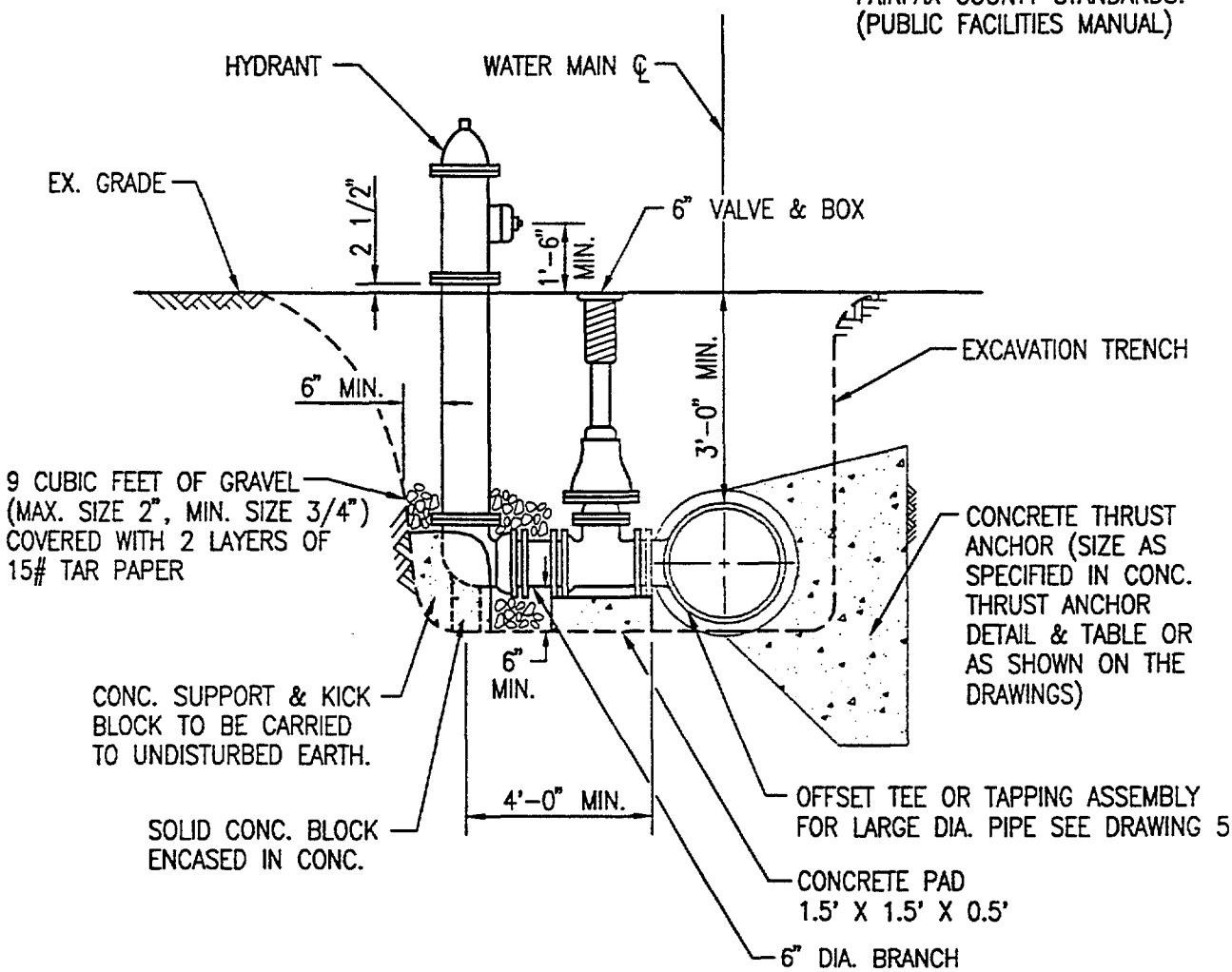

NOTES:

1. IF SWIVEL TEE IS NOT USED, VALVE MUST BE RESTRAINED TO TEE WITH MEGALUG RETAINING GLANDS.

FAIRFAX COUNTY WATER AUTHORITY STANDARD DETAILS		SCALE NOT TO SCALE
STANDARD HYDRANT INSTALLATION CONTRACT ITEM 11		DRAWING NO. 4 FILE: SD9404

228

APPROVALS			REVISIONS			
	INITIALS	DATE	NO.	DESCRIPTION	INITIALS	DATE
CHECKED BY	RJZ	12/20/94				
CHECKED BY	MIS	12/20/94				
APPROVED BY	RJE	12/20/94				

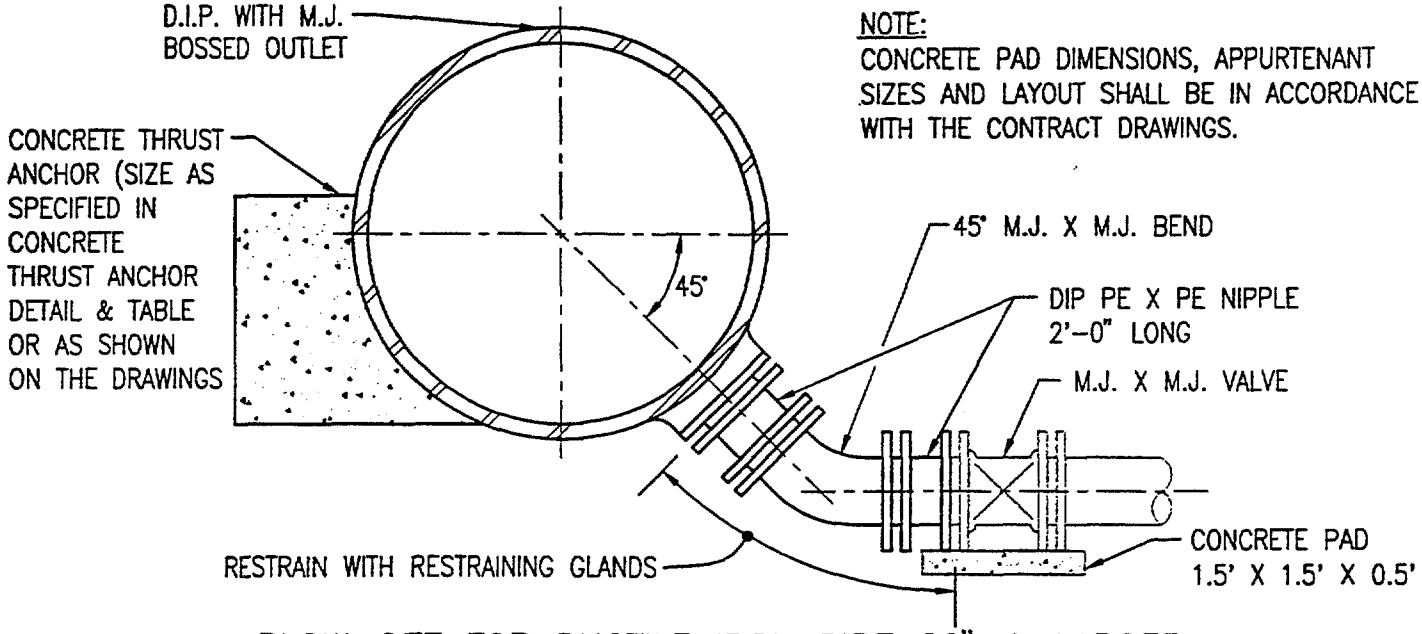

NOTE:
CONCRETE PAD DIMENSIONS, APPURTENANT SIZES AND LAYOUT SHALL BE IN ACCORDANCE WITH THE CONTRACT DRAWINGS.

BLOW-OFF FOR DUCTILE IRON PIPE 20" & LARGER

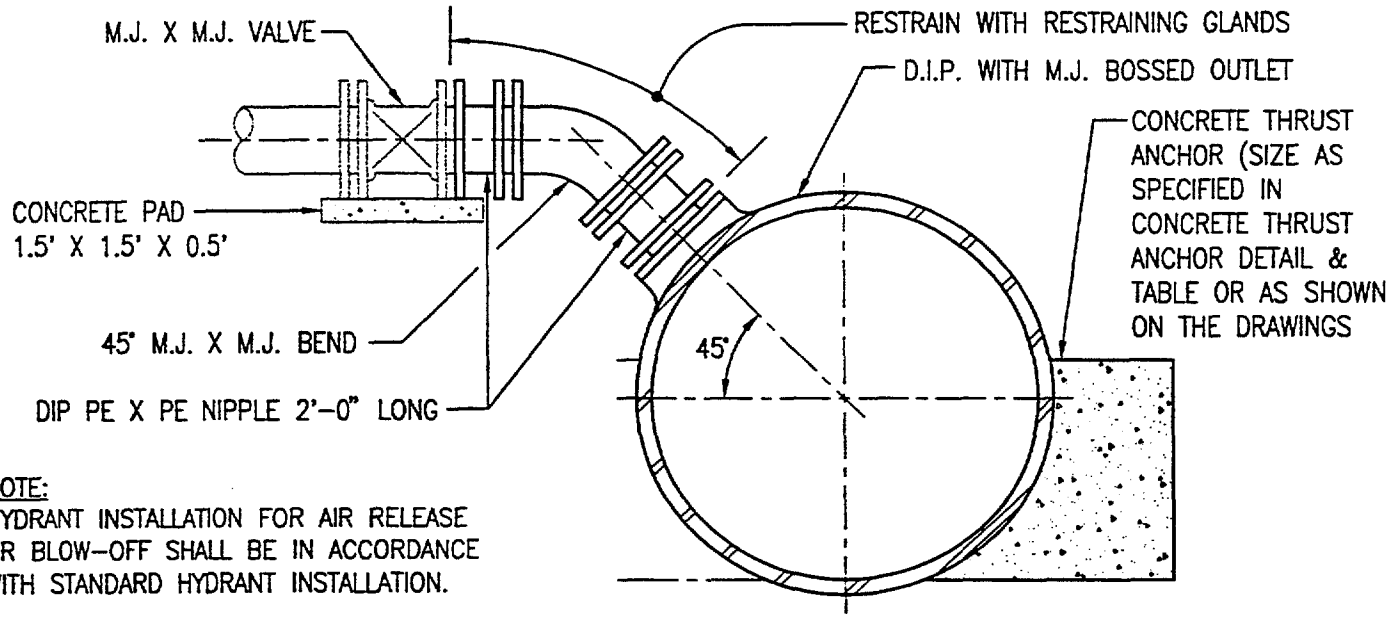

NOTE:
HYDRANT INSTALLATION FOR AIR RELEASE OR BLOW-OFF SHALL BE IN ACCORDANCE WITH STANDARD HYDRANT INSTALLATION.

AIR RELEASE PIPING FOR DUCTILE IRON PIPE 20" & LARGER

FAIRFAX COUNTY WATER AUTHORITY STANDARD DETAILS		SCALE NOT TO SCALE
AIR RELEASE AND BLOW-OFF PIPING DUCTILE IRON PIPE 20" & LARGER CONTRACT ITEM 17-19 & 24		DRAWING NO. 5 FILE: SD9405

129

APPROVALS	INITIALS	DATE
CHECKED BY	RJZ	12/20/94
CHECKED BY	MIS	12/20/94
APPROVED BY	RJE	12/20/94

REVISIONS			
NO.	DESCRIPTION	INITIALS	DATE

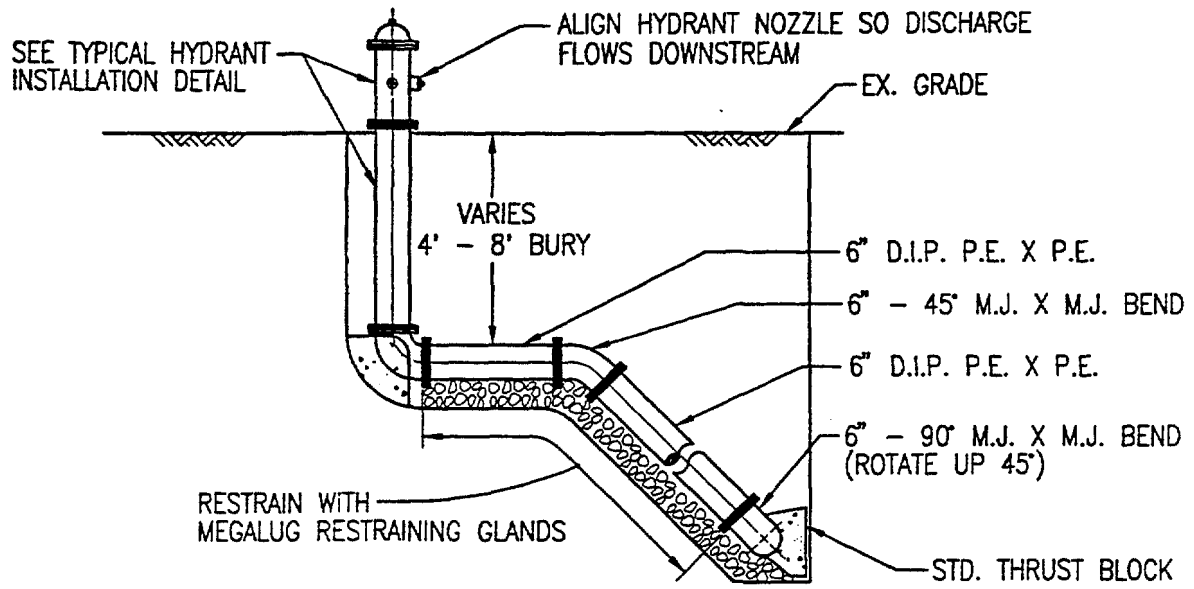

SIDE ELEVATION

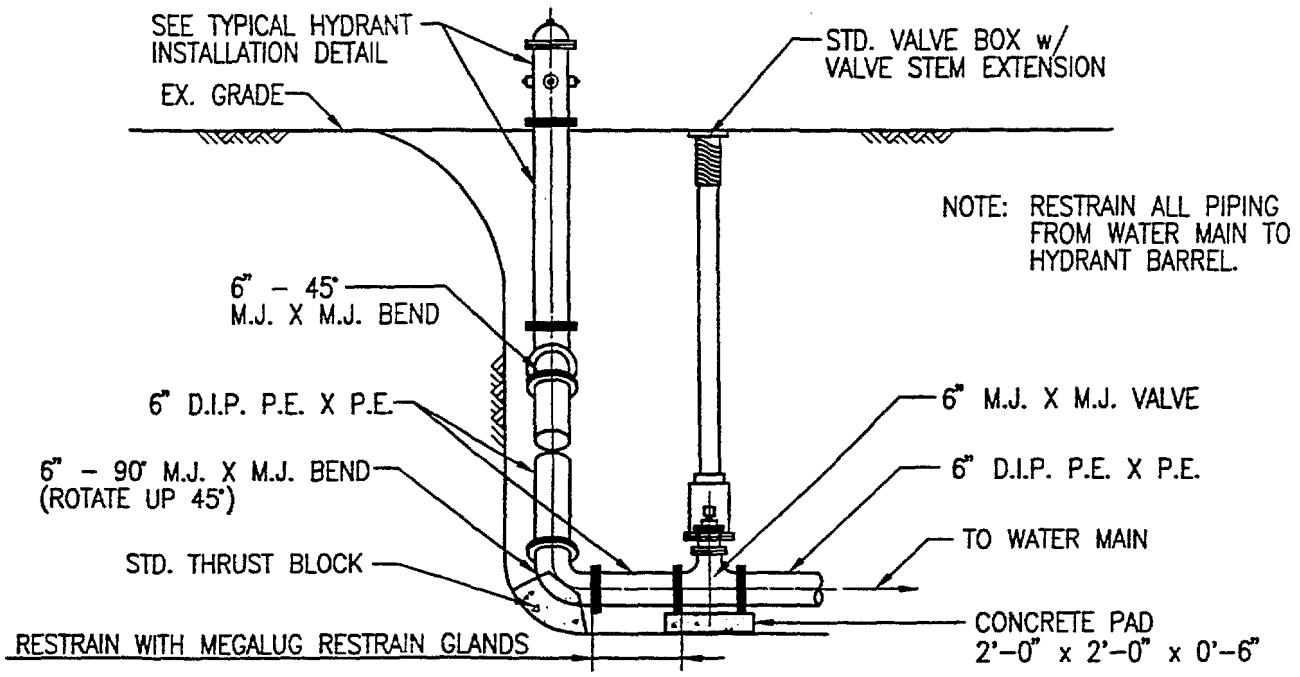

FRONT ELEVATION

FAIRFAX COUNTY WATER AUTHORITY STANDARD DETAILS		SCALE NOT TO SCALE
STANDARD HYDRANT (GREATER THAN 8' BURY) CONTRACT ITEM 11, 14, 24		DRAWING NO. 6 FILE: SD9406

130

APPROVALS			REVISIONS			
	INITIALS	DATE	NO.	DESCRIPTION	INITIALS	DATE
CHECKED BY	RJZ	12/20/94				
CHECKED BY	MIS	12/20/94				
APPROVED BY	RJE	12/20/94				

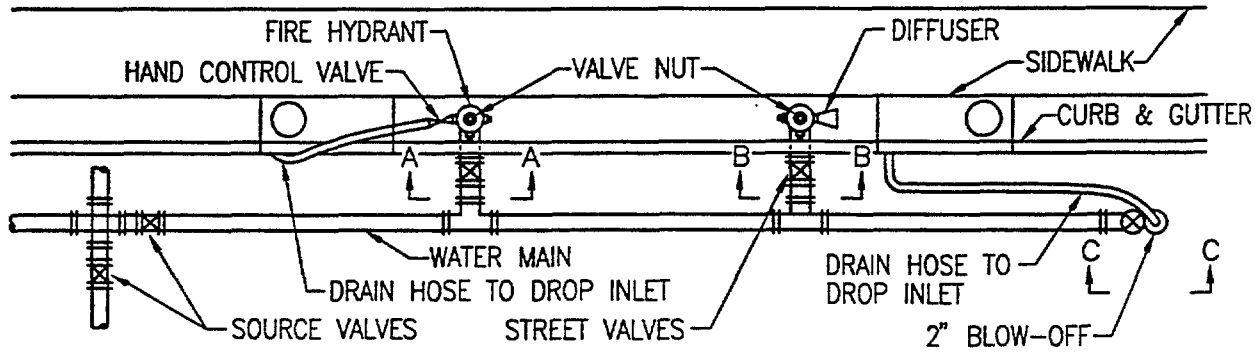

PLAN

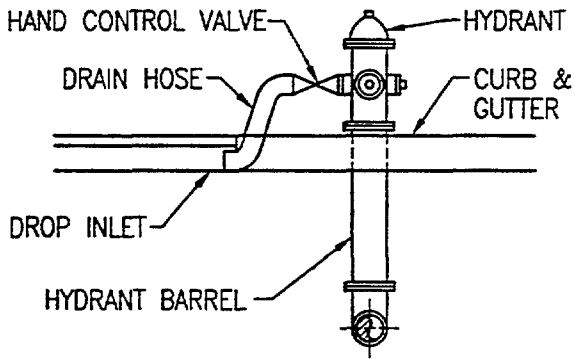

SECTION A–A

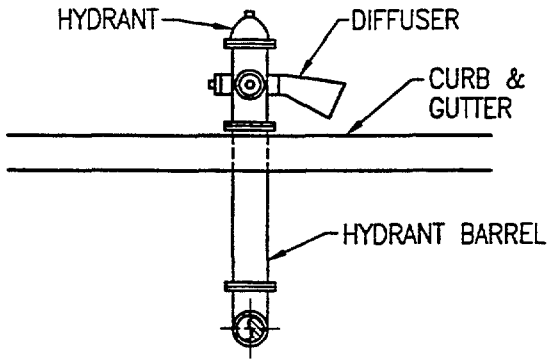

SECTION B–B

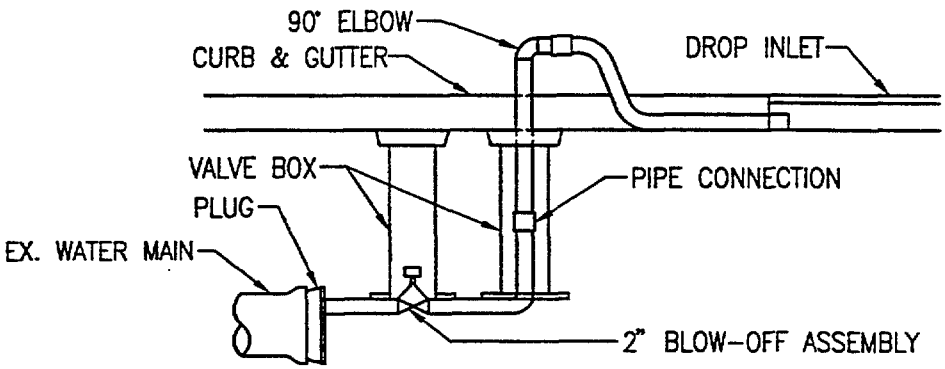

NOTE:
DISCHARGE END OF DRAIN HOSE SHALL NOT BE SUBMERGED AND SHALL REMAIN OPEN TO AIR.

SECTION C–C

FAIRFAX COUNTY WATER AUTHORITY STANDARD DETAILS		SCALE NOT TO SCALE
METHODS OF FLUSHING FIRE HYDRANTS AND BLOW-OFFS CONTRACT ITEM 13 – 19		DRAWING NO. 7 FILE: SD9407

231

APPROVALS			REVISIONS			
	INITIALS	DATE	NO.	DESCRIPTION	INITIALS	DATE
CHECKED BY	RJZ	12/20/94				
CHECKED BY	MIS	12/20/94				
APPROVED BY	RJE	12/20/94				

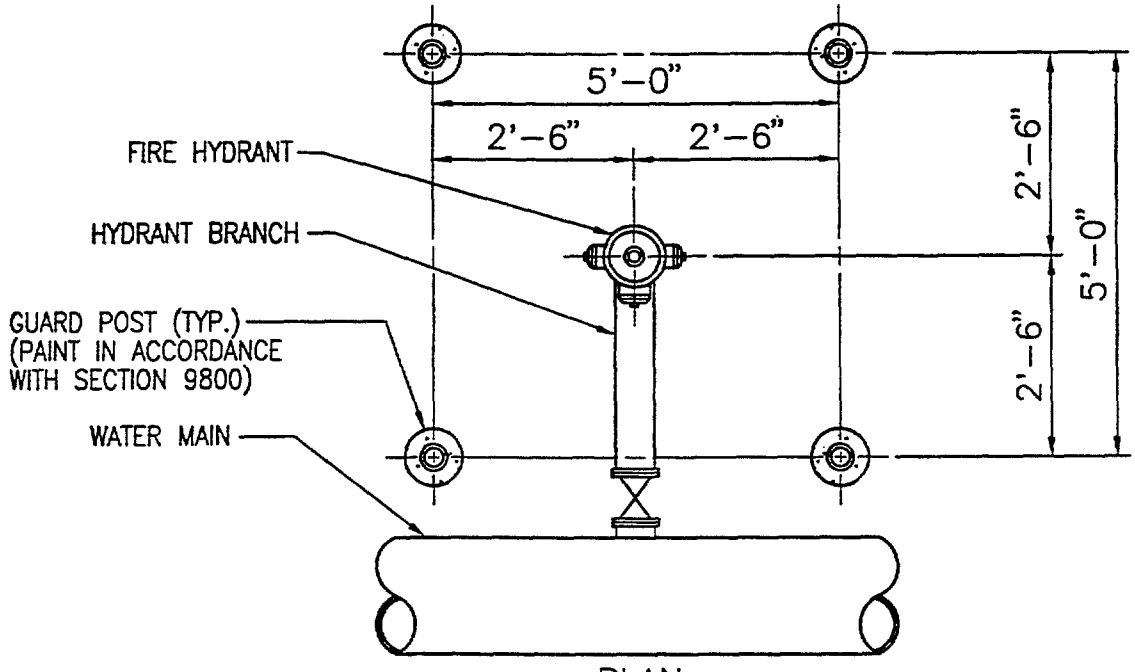

PLAN

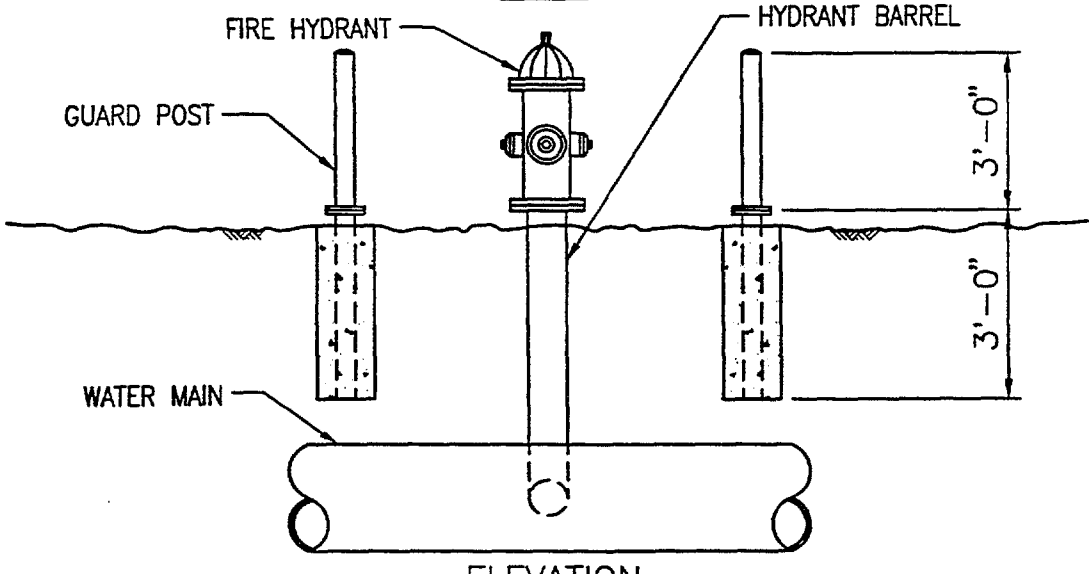

ELEVATION

NOTE:

GUARD POSTS ARE USED TO PROTECT A HYDRANT IN AREAS WHERE VEHICULAR OR EQUIPMENT TRAFFIC MAY BE ENCOUNTERED. THE DRAWING OR ENGINEER TO SPECIFY THE INSTALLATION OF GUARD POSTS.

FAIRFAX COUNTY WATER AUTHORITY

STANDARD DETAILS

SCALE NOT TO SCALE

HYDRANT PROTECTION – GUARD POSTS DETAIL

CONTRACT ITEM 11

DRAWING NO. 8

FILE: SD9408

APPROVALS			REVISIONS			
	INITIALS	DATE	NO.	DESCRIPTION	INITIALS	DATE
CHECKED BY	RJZ	12/20/94				
CHECKED BY	MIS	12/20/94				
APPROVED BY	RJE	12/20/94				

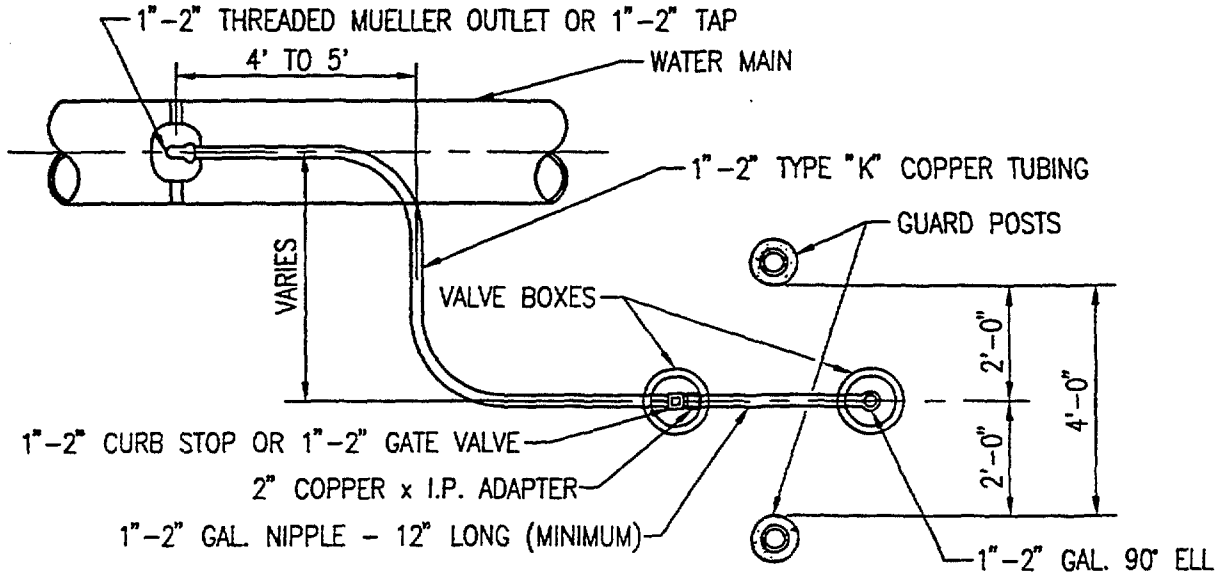

PLAN

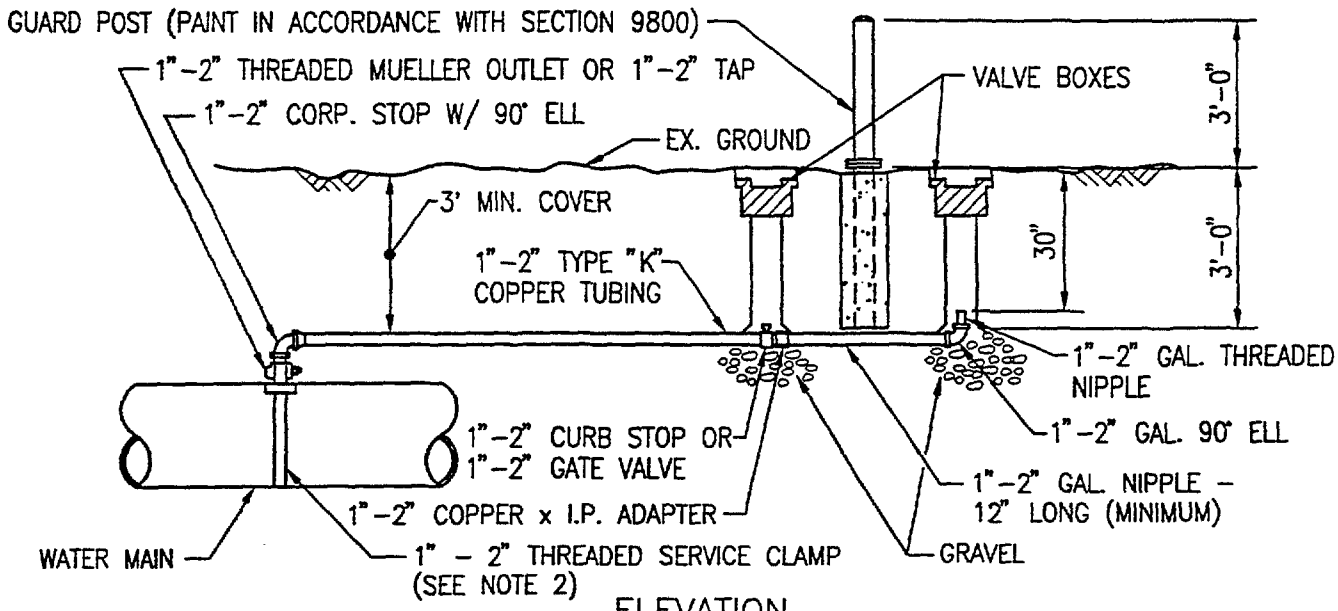

ELEVATION

NOTES:
1. THE DRAWINGS OR ENGINEER SHALL SPECIFY THE INSTALLATION OF GUARD POSTS.
2. THREADED SERVICE CLAMP TO BE USED ON 3" AND 20" & LARGER WATER MAINS.

FAIRFAX COUNTY WATER AUTHORITY STANDARD DETAILS		SCALE NOT TO SCALE
1" - 2" AIR RELEASE W/ GUARD POSTS DETAIL CONTRACT ITEM 26, 30		DRAWING NO. 9 FILE: SD9409

233

APPROVALS			REVISIONS			
	INITIALS	DATE	NO.	DESCRIPTION	INITIALS	DATE
CHECKED BY	RJZ	12/20/94				
CHECKED BY	MIS	12/20/94				
APPROVED BY	RJE	12/20/94				

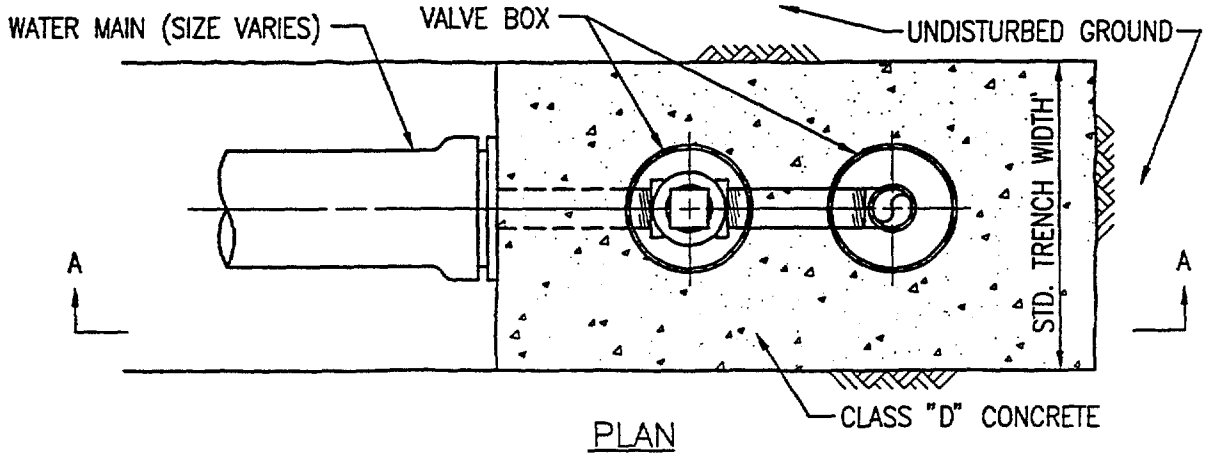

PLAN

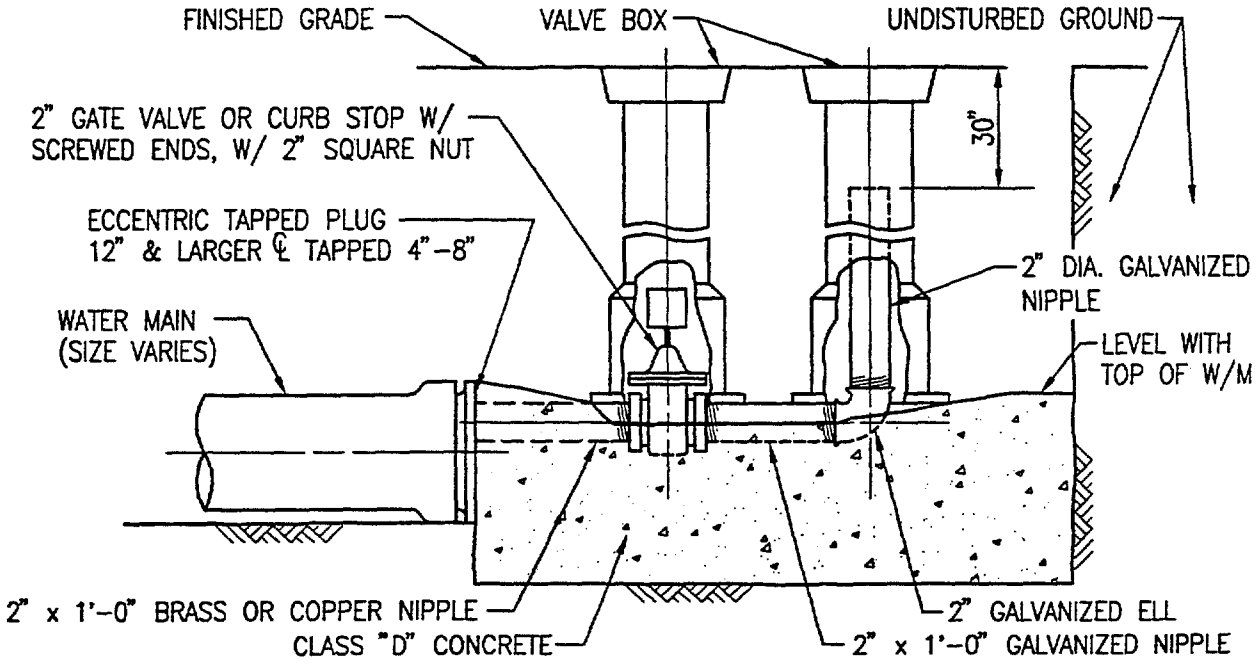

SECTION A-A

NOTE:

1. BLOCKING SHALL EXTEND BEYOND THE WATER MAIN TO UNDISTURBED GROUND.
2. PER VDOT REQUIREMENTS, BLOW-OFF VALVE BOXES TO BE INSTALLED NO CLOSER THAN 5'-0" TO EDGE OF PAVEMENT IN CUL-DE-SAC INSTALLATIONS.

FAIRFAX COUNTY WATER AUTHORITY STANDARD DETAILS		SCALE NOT TO SCALE
2" BLOW-OFF DETAIL CONTRACT ITEM 26		DRAWING NO. 10 FILE: SD9410

234

APPROVALS			REVISIONS			
	INITIALS	DATE	NO.	DESCRIPTION	INITIALS	DATE
CHECKED BY	RJZ	12/20/94				
CHECKED BY	MIS	12/20/94				
APPROVED BY	RJE	12/20/94				

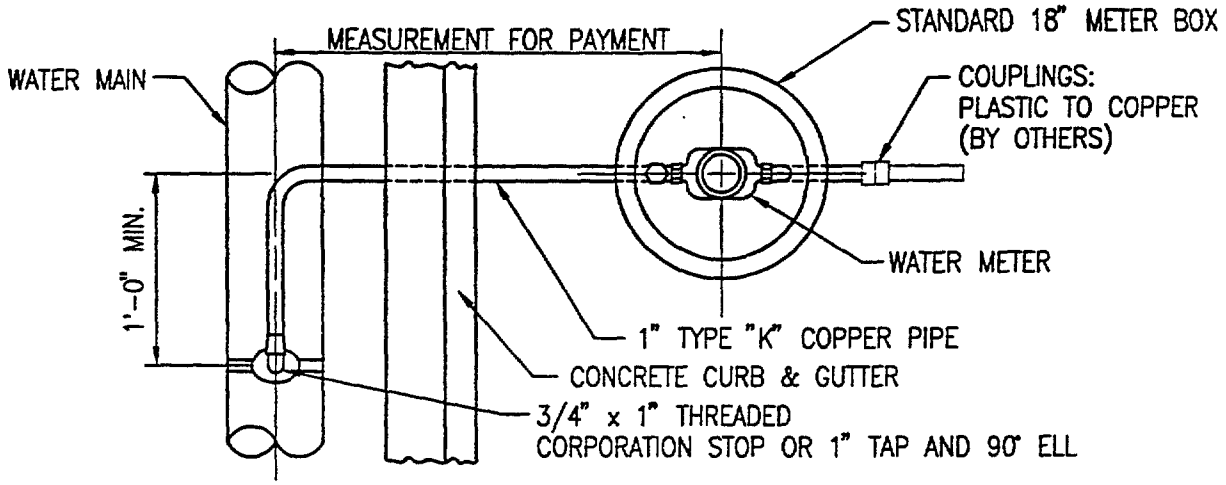

PLAN

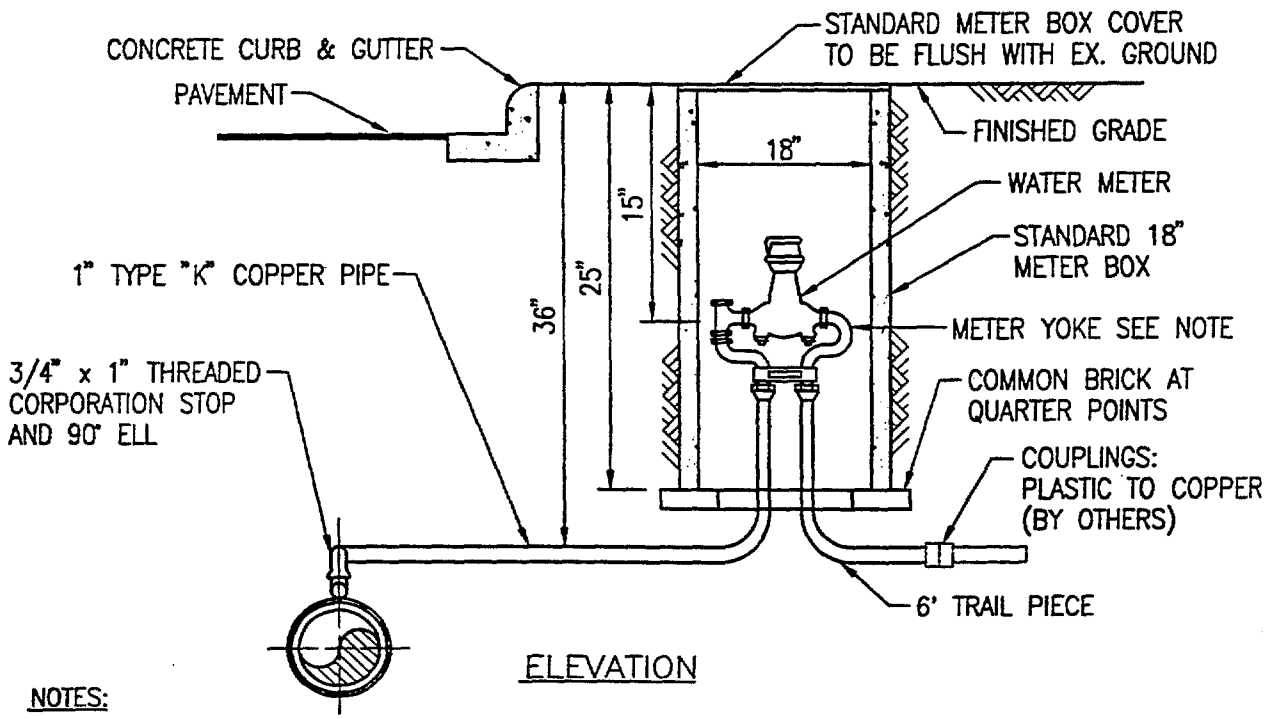

ELEVATION

NOTES:

1. NO PLASTIC TUBING TO BE USED INSIDE METER BOX.
2. METER BOX, METER BOX COVER, 5/8" x 1" METER YOKE TO BE F.C.W.A. STANDARD TYPE.
3. THREADED SERVICE CLAMP TO BE USED ON 3" AND 20" & LARGER WATER MAINS.

FAIRFAX COUNTY WATER AUTHORITY STANDARD DETAILS		SCALE NOT TO SCALE
1" SERVICE CONNECTION WITH WATER METER CONTRACT ITEM 30		DRAWING NO. 11 FILE: SD9411

APPROVALS			REVISIONS			
	INITIALS	DATE	NO.	DESCRIPTION	INITIALS	DATE
CHECKED BY	RJZ	12/20/94				
CHECKED BY	DAW	12/20/94				
APPROVED BY	RJE	12/20/94				

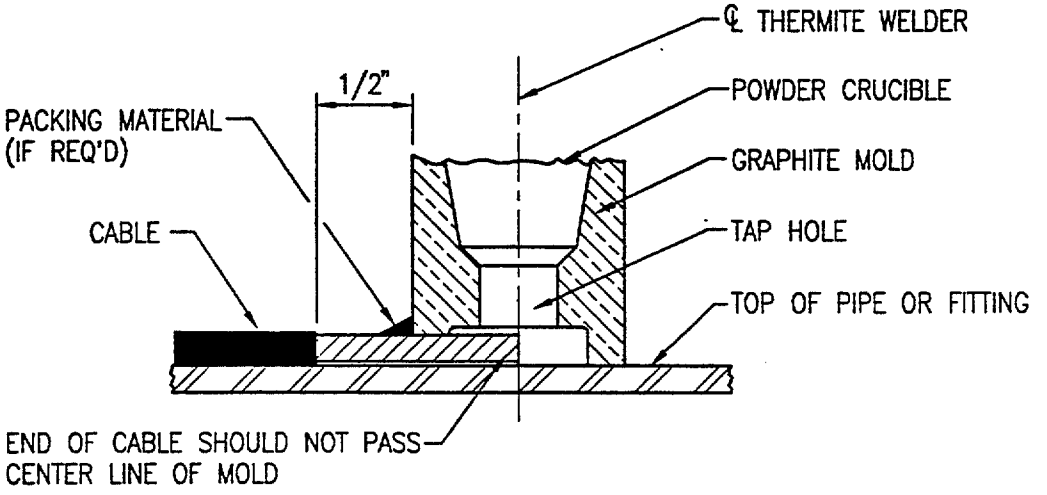

MOLD & WIRE POSITION

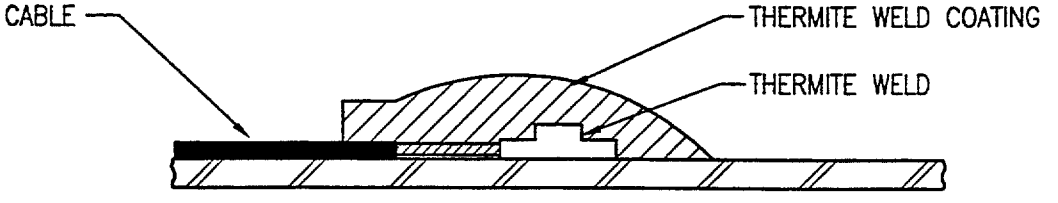

COMPLETED WELD

NOTE:

1. REFER TO SPECIFICATION SECTION 02655 FOR MOLD, WELD METAL, AND THERMITE WELD COATING INFORMATION.

FAIRFAX COUNTY WATER AUTHORITY STANDARD DETAILS		SCALE NOT TO SCALE
CORROSION CONTROL THERMITE WELDS CONTRACT ITEM 29		DRAWING NO. 12 FILE: SD9412

APPROVALS			REVISIONS			
	INITIALS	DATE	NO.	DESCRIPTION	INITIALS	DATE
CHECKED BY	RJZ	12/20/94				
CHECKED BY	DAW	12/20/94				
APPROVED BY	RJE	12/20/94				

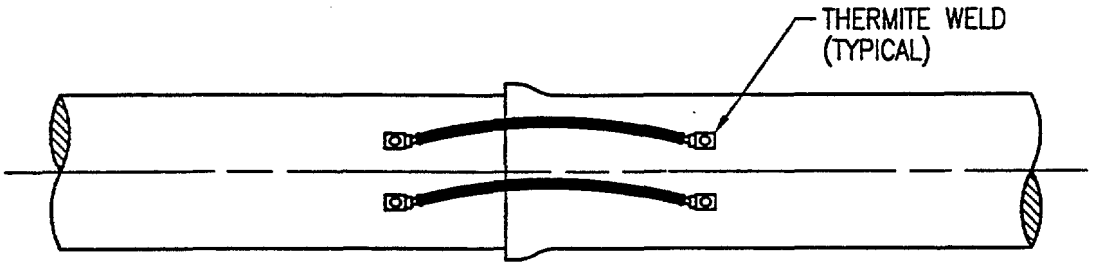

TYPICAL PIPE JOINT BOND

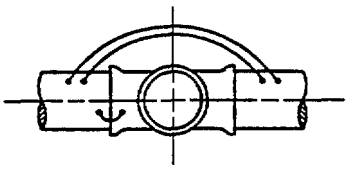

VALVE, REDUCER, SOLID SLEEVE

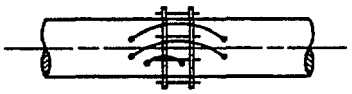

MECHANICAL SLEEVE

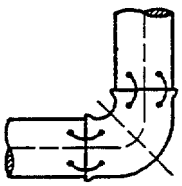

BEND

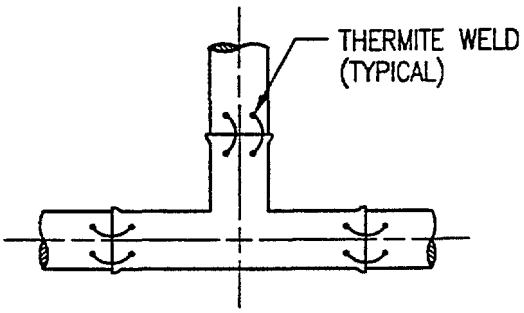

TEE

TYPICAL BONDING FOR FITTINGS

NOTES:

1. THERMITE WELD BONDING WIRES TO TOP OF PIPE OR FITTINGS.

2. WIRE SIZE FOR BONDING JOINTS SHALL BE AS FOLLOWS:
   12" & SMALLER – #6 AWG
   16" TO 36" – #4 AWG
   42" & LARGER – #2 AWG

3. BOND WIRE LENGTH SHALL BE KEPT TO A MINIMUM FOR FITTINGS. MAXIMUM BOND WIRE LENGTH FOR PIPE JOINT SHALL BE 18 INCHES.

FAIRFAX COUNTY WATER AUTHORITY
STANDARD DETAILS

SCALE
NOT TO SCALE

CORROSION CONTROL BONDED JOINTS

CONTRACT ITEM 29

DRAWING NO.
13

FILE: SD9413

237

APPROVALS			REVISIONS			
	INITIALS	DATE	NO.	DESCRIPTION	INITIALS	DATE
CHECKED BY	RJZ	12/20/94				
CHECKED BY	DAW	12/20/94				
APPROVED BY	RJE	12/20/94				

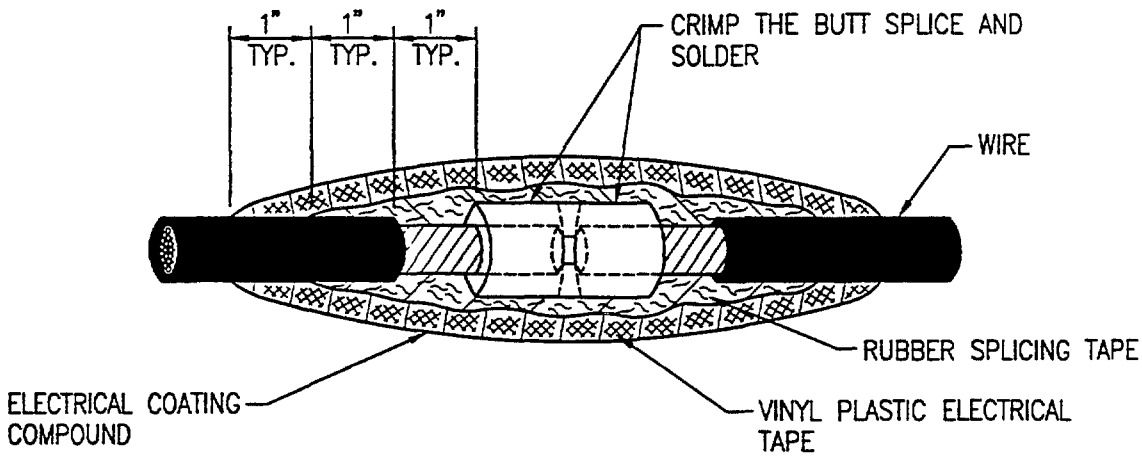

TYPICAL WIRE SPLICE

FAIRFAX COUNTY WATER AUTHORITY STANDARD DETAILS		SCALE NOT TO SCALE
CORROSION CONTROL MISCELLANEOUS DETAIL CONTRACT ITEM 29		DRAWING NO. 14 FILE: SD9414

236

APPROVALS	INITIALS	DATE
CHECKED BY	RJZ	12/20/94
CHECKED BY	DAW	12/20/94
APPROVED BY	RJE	12/20/94

REVISIONS			
NO.	DESCRIPTION	INITIALS	DATE

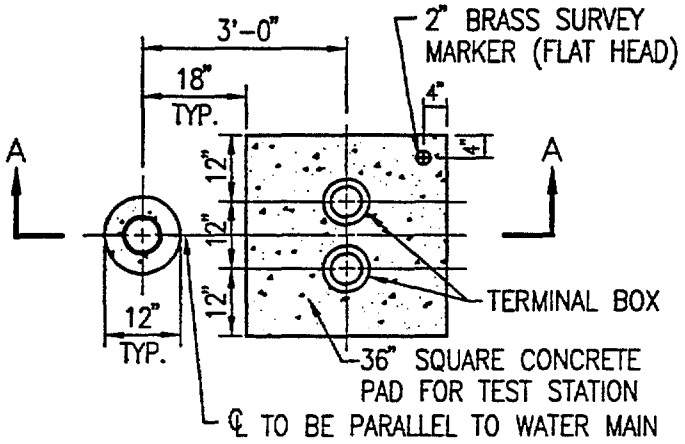

DOUBLE TERMINAL BOX TEST STATION

(TYPE F–FOREIGN PIPELINE CROSSING TEST STATION ONLY)

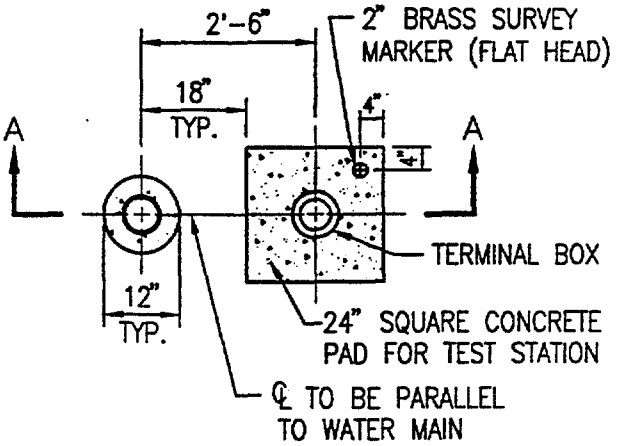

SINGLE TERMINAL BOX TEST STATION

PLAN

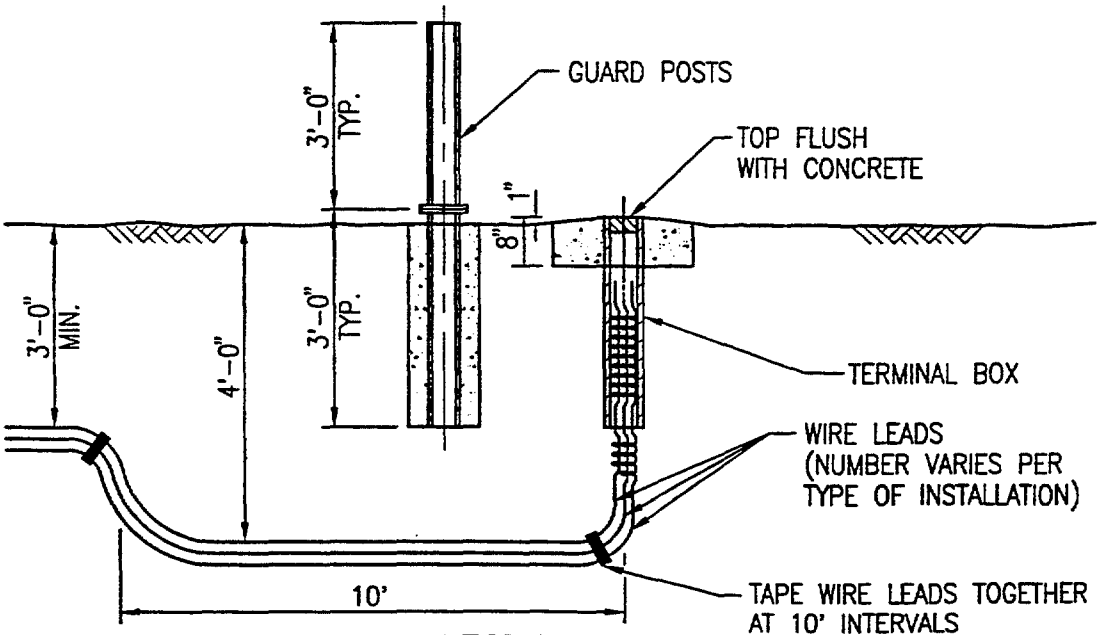

SECTION A–A

NOTES:

1. LOCATE SURVEY MARKER IN NORTHEAST CORNER OF CONCRETE PAD.
2. GUARD POSTS SHALL BE PRIMED AND PAINTED AS SPECIFIED IN SECTION 02655 – CORROSION CONTROL.

FAIRFAX COUNTY WATER AUTHORITY

STANDARD DETAILS

SCALE NOT TO SCALE

CORROSION CONTROL
TEST STATION INSTALLATION

CONTRACT ITEM 29

DRAWING NO. 15

FILE: SD9415

259

APPROVALS			REVISIONS			
	INITIALS	DATE	NO.	DESCRIPTION	INITIALS	DATE
CHECKED BY	RJZ	12/20/94				
CHECKED BY	DAW	12/20/94				
APPROVED BY	RJE	12/20/94				

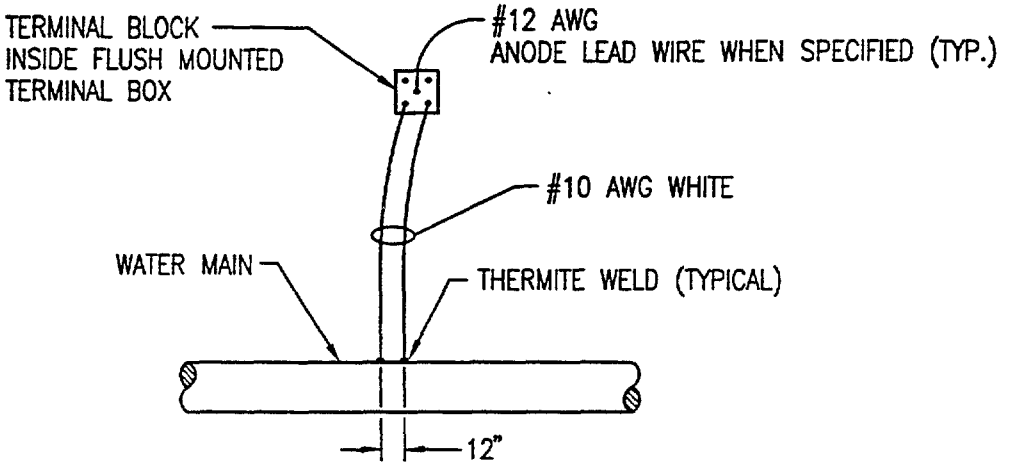

TYPE T – STANDARD

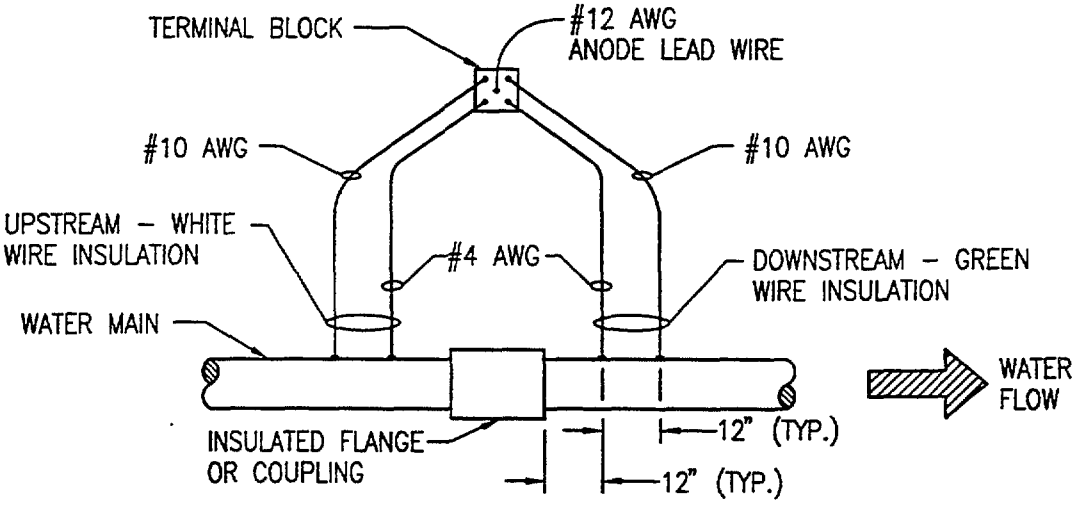

TYPE I – INSULATED FLANGE

NOTE:
1. WHEN MULTIPLE ANODE LEADS ARE ATTACHED TO A TERMINAL BLOCK, PROVIDE A DIFFERENT COLOR FOR EACH.

FAIRFAX COUNTY WATER AUTHORITY STANDARD DETAILS		SCALE NOT TO SCALE
CORROSION CONTROL TEST STATION WIRING TYPE T – STANDARD, TYPE I – INSULATED FLANGE CONTRACT ITEM 29		DRAWING NO. 16 FILE: SD9416

740

APPROVALS			REVISIONS			
	INITIALS	DATE	NO.	DESCRIPTION	INITIALS	DATE
CHECKED BY	RJZ	12/20/94				
CHECKED BY	DAW	12/20/94				
APPROVED BY	RJE	12/20/94				

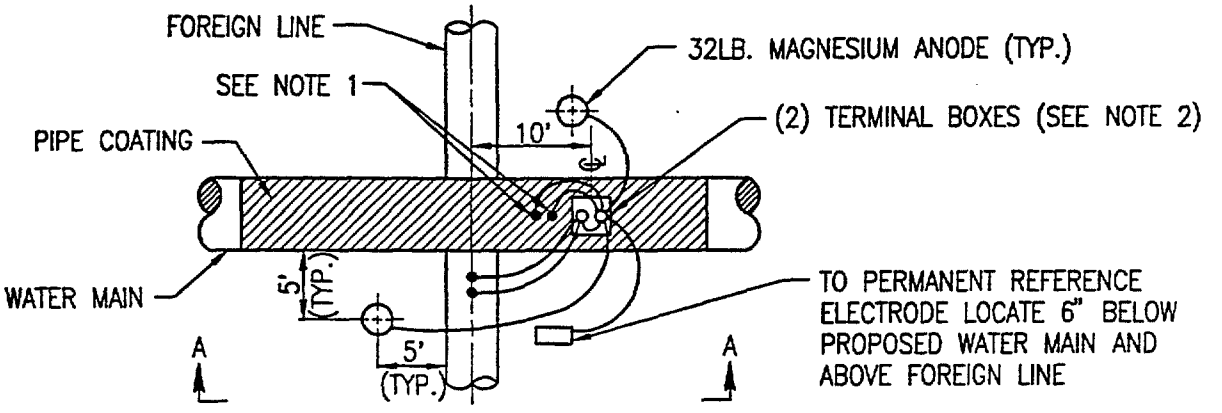

PLAN

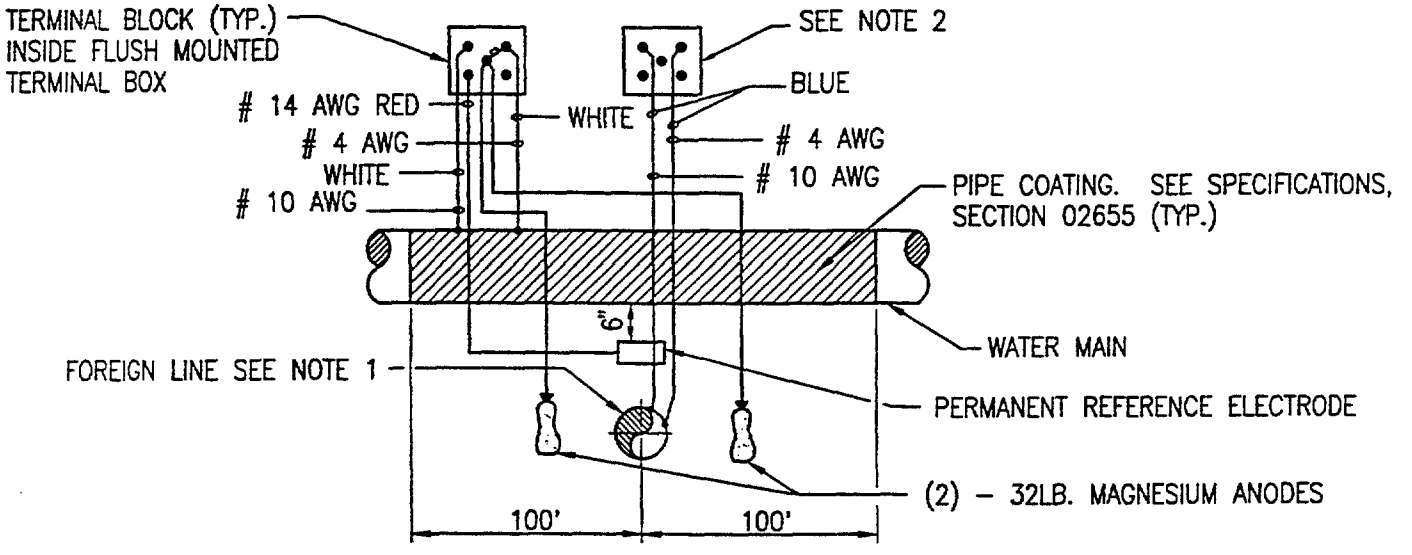

SECTION A–A

NOTES:
1. CONNECTIONS TO FOREIGN LINE BY FOREIGN LINE OWNER.
2. IN COLUMBIA GAS R–O–W INSTALL SINGLE TERMINAL BOX WITHOUT BOLLARD ADJACENT TO PROPOSED COLUMBIA GAS TEST STATION. CONTRACTOR SHALL COORDINATE INSTALLATION WITH COLUMBIA GAS.

FAIRFAX COUNTY WATER AUTHORITY STANDARD DETAILS		SCALE NOT TO SCALE
CORROSION CONTROL TEST STATION WIRING TYPE F – FOREIGN PIPELINE CROSSING CONTRACT ITEM 29		DRAWING NO. 17 FILE: SD9417

0941

APPROVALS			REVISIONS			
	INITIALS	DATE	NO.	DESCRIPTION	INITIALS	DATE
CHECKED BY	RJZ	12/20/94				
CHECKED BY	DAW	12/20/94				
APPROVED BY	RJE	12/20/94				

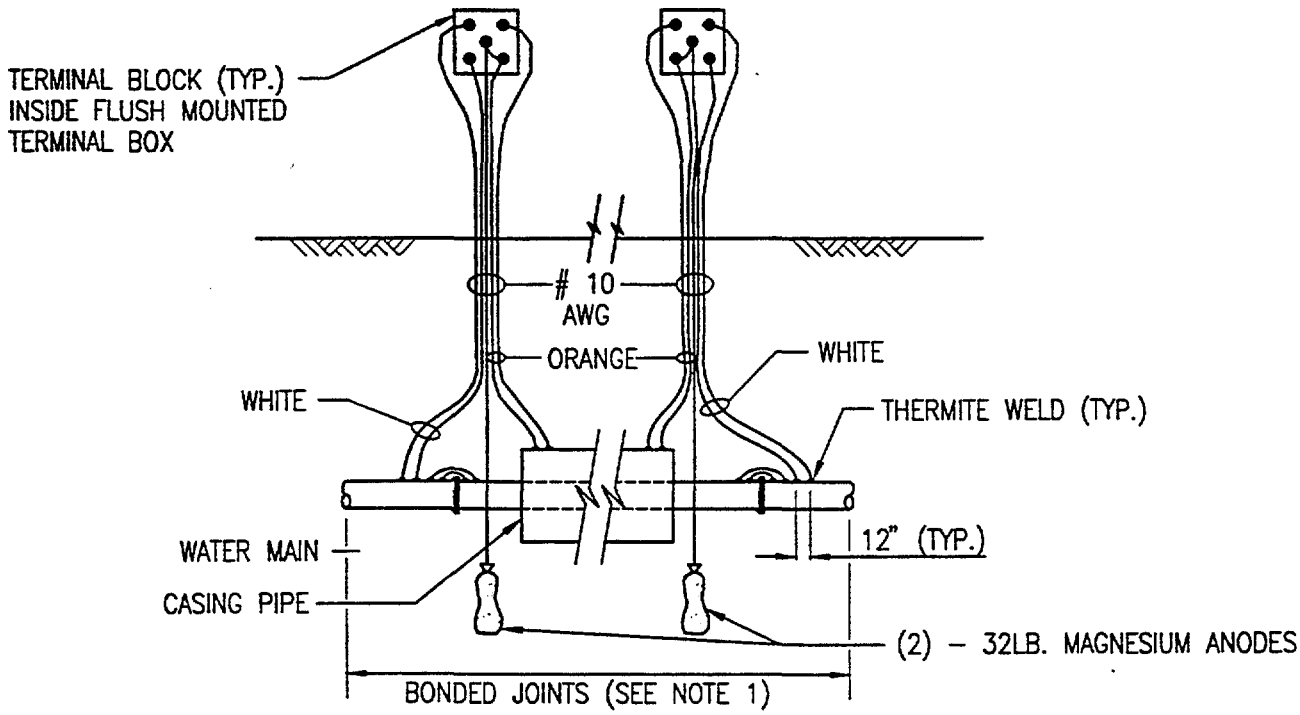

PLAN

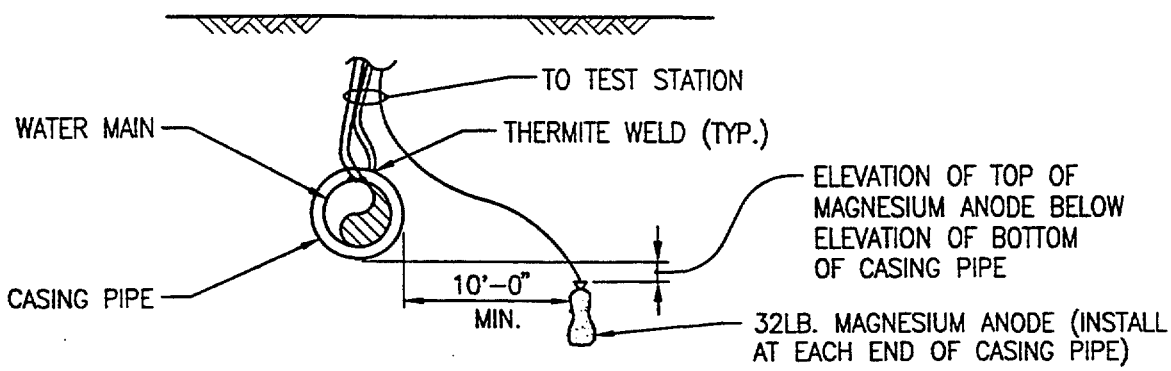

SECTION

NOTE:
1. PROVIDE ELECTRICAL CONTINUITY BETWEEN TYPE C – TRENCHLESS CROSSING TEST STATIONS, MINIMUM.

	FAIRFAX COUNTY WATER AUTHORITY STANDARD DETAILS	SCALE NOT TO SCALE
	CORROSION CONTROL TEST STATION WIRING TYPE C – TRENCHLESS CROSSING CONTRACT ITEM 23 & 29	DRAWING NO. 18 FILE: SD9418

242

APPROVALS			REVISIONS			
	INITIALS	DATE	NO.	DESCRIPTION	INITIALS	DATE
CHECKED BY	RJZ	12/20/94				
CHECKED BY	MIS	12/20/94				
APPROVED BY	RJE	12/20/94				

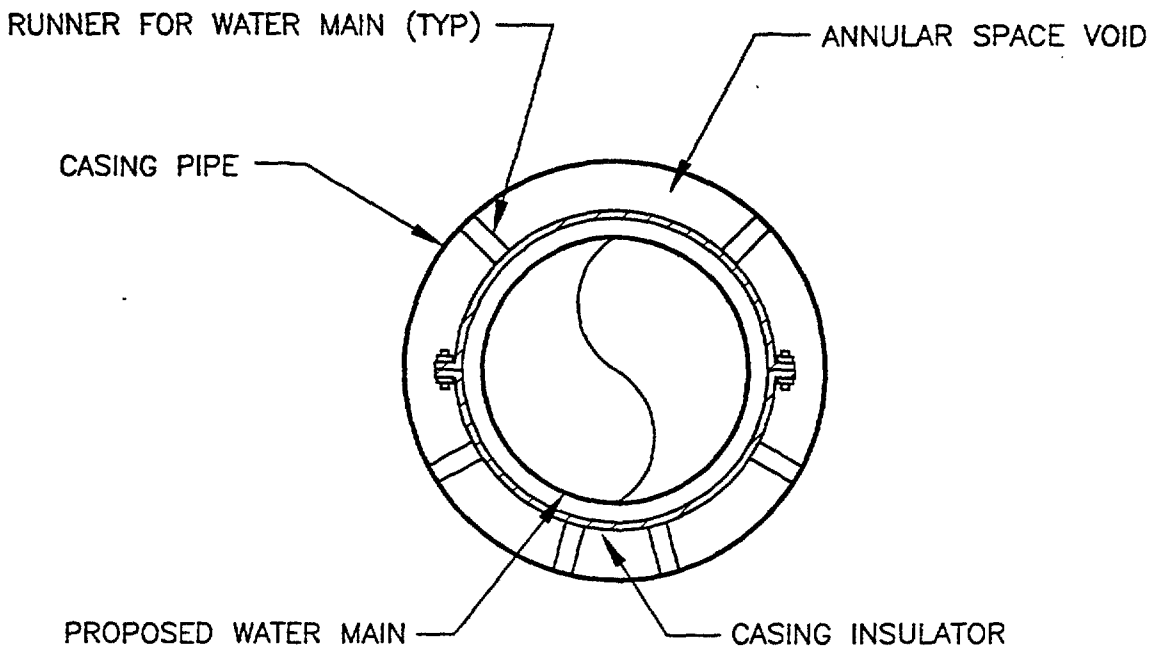

CASING PIPE SIZES		
WATER MAIN PIPE SIZE (INCHES)	CASING PIPE SIZE (INCHES)	CASING THICKNESS (INCHES)
6	16	0.375
8	20	0.375
12	24	0.375
16	30	0.375
20	36	0.375
24	42	0.500
30	48	0.500
36	54	0.500

NOTE:
1. CORROSION CONTROL MEASURES REQUIRED FOR TRENCHLESS CROSSINGS SEE SECTION 02655 AND TYPE C TEST STATION STANDARD DETAIL.

FAIRFAX COUNTY WATER AUTHORITY
STANDARD DETAILS

SCALE
NOT TO SCALE

TRENCHLESS CROSSING INSTALLATION

CONTRACT ITEM 23

DRAWING NO.
19
FILE: SD9419

243

PLANS

PURPOSE

- OBTAIN APPROVAL FROM REGULATORY AND FINANCING AGENCIES
- PROVIDE A BASIS FOR CONSTRUCTION
- SERVE AS A PERMANENT RECORD OF FACILITIES

INCLUDE SHEETS FOR

- TITLE AND INDEX
- SITE/LOCATION PLAN
- TOPOGRAPHY (ON PLAN SHEETS)
- PLAN AND PROFILES
- CROSS SECTIONS
- DETAILS

TITLE BLOCKS

- DATES; APPROVAL & REVISIONS
- NAMES OF DESIGN/APPROVAL ENGINEERS
- IDENTIFICATION OF PROJECT AND DATA ON SHEET

LEGEND

- SCALES (INCLUDE BAR CHART)
- NORTH ARROW
- SYMBOLS EXPLANATION
- ABBREVIATIONS

NOTES

- EXPLANATIONS AND CLARIFICATIONS
- CONTRACTOR GUIDANCE (NOT IN TECHNICAL SPECIFICATIONS)
- KEY DESIGN ASSUMPTIONS
- REFERENCES

COST ANALYSIS

PURPOSE

- REVIEW IMPACT OF COSTS ON DESIGNING WATER SYSTEMS
- REVIEW HOW DESIGN DECISIONS RELATE TO USER FEES

CAPITAL BUDGETING TECHNIQUES

- CAPITAL BUDGETING INVOLVES PLANNING FOR THE BEST SELECTIONS AND FINANCING OF LONG TERM INVESTMENTS
- TWO STANDARD APPROACHES USED TO ANALYZE ALTERNATIVES OFTEN USED ARE:

  1 . NET PRESENT VALUE (NPV)

  2 - INTERNAL RATE OF RETURN

1. NET PRESENT VALUE

$$NPV = PVi - PVo$$

NPV - NET PRESENT VALUE

PVi - PRESENT VALUE OF INCOME FROM PROJECT

PVo - PRESENT VALUE OF CASH OUTFLOW FROM PROJECT

NPV APPROACH USES INTEREST RATES FACTORS BASED ON CURRENT OR PROJECTED COSTS OF CAPITAL

NPV MUST BE ZERO OR POSITIVE TO ASSURE THAT COSTS WILL BE MET.

THE PVi FOR A WATER UTILITY MUST COME PRIMARILY FROM USER FEES

2. INTERNAL RATE OF RETURN (IRR)

THE IRR METHOD SETS THE NPV AT ZERO WHILE THE INTEREST RATE IS CALCULATED BASED ON A TRIAL AND ERROR METHOD

THESE APPROACHES ARE TYPICALLY USED BY ECONOMISTS ANALYZING THE ECONOMIC FEASIBILITY OF A PROJECT AND ARE GENERALLY REQUIRED BY FINANCIAL INSTITUTIONS AND DONOR AGENCIES DURING THE PROJECT EVALUATION PROCESS.

ALTERNATIVE ANALYSIS

PRESENT WORTH

- ALL COSTS ARE CAPITALIZED TO THEIR VALUE TODAY
- USE STANDARD DISCOUNT OR PRESENT WORTH FACTORS
- DIFFERENT ALTERNATIVES CAN BE REDUCED TO THEIR PRESENT WORTH VALUE AND COMPARED ON AN EQUAL BASIS

ANNUAL COSTS

- ALL COSTS ARE SPREAD OUT TO THEIR EQUIVALENT VALUE IF PAID ON AN ANNUAL BASIS
- USE CAPITAL RECOVER FACTORS
- AGAIN, DIFFERENT ALTERNATIVES CAN BE REVIEWED BY COMPARING THEIR ANNUAL COSTS

EXAMPLE

ASSUME A VILLAGE OF 20,000 PEOPLE REQUIRING THE FOLLOWING

PIPE SIZE	PROT STEEL	PVC	HDPE
MATERIAL	**DOLLARS PER METER**		
6"	25	7	10
3"	16	2	3
1"	5	1	1
INSTALLATION			
6"	50	40	30
3"	40	30	25
1"	10	10	10
TOTAL/M			
6"	75	47	40
3"	56	32	28
1"	15	11	11
TOTAL SYSTEM COSTS IN DOLLARS			
5000M-6"	375,000	235,000	200,000
10,000M-3"	560,000	320,000	280,000
2000M-1"	30,000	22,000	22.000
TOTAL	$965,000	$577,000	$502,000

NUMBERS ARE ILLUSTRATIVE

EXAMPLE 1

DETAILS

ITEM	PROT STEEL	PVC	HDPE
NETWORK INSTALLED	$965,000	$577,000	$502,000
LIFE IN YEARS	40	50	30
SALVAGE VALUE	0	0	0
SERVICE FOR 20,000	--	--	--

ANNUAL COSTS

O & M	--	--	--
PIPE REPAIR	$10,000	$20,000	$30,000
RECOVERY FACTOR 10%	0.10226	0.10086	0.10608
CAPITAL RECOVERY	$98,680	$58,196	$53,252
TOTAL	$108,680	$78,196	$83,252

COST PER CUM WATER

DESIGN	$.19	$.13	$.14
80% DESIGN	$.23	$.17	$.18

EXAMPLE 2

DETAILS

ITEM	PROT STEEL	PVC	HDPE
NETWORK INSTALLED	$965,000	$577,000	$502,000
LIFE IN YEARS	40	50	30
SALVAGE VALUE	0	0	0
SERVICE FOR 20,000	--	--	--

ANNUAL COSTS

O & M	--	--	--
PIPE REPAIR	$10,000	$20,000	$30,000
RECOVERY FACTOR 20%	0.20014	0.20002	0.20085
CAPITAL RECOVERY	$193,135	$115,411	$100,826
TOTAL	$203,135	$135,411	$130,826

COST PER CUM WATER

DESIGN	$.35	$.23	$.22
80% DESIGN	$.43	$.29	$.28

EXAMPLE 3

DETAILS

ITEM	PROT STEEL	PVC	HDPE
NETWORK INSTALLED	$965,000	$577,000	$502,000
LIFE IN YEARS	50	25	20
SALVAGE VALUE	0	0	0
SERVICE FOR 20,000	--	--	--

ANNUAL COSTS

O & M	--	--	--
PIPE REPAIR	--	--	--
RECOVERY FACTOR 10%	0.10086	0.11017	0.11746
CAPITAL RECOVERY	$97,323	$63,568	$58,965
TOTAL			

COST PER CUM WATER

DESIGN	$0.17	$0.11	$0.10
80% DESIGN	0.21	0.14	0.13

EXAMPLE 4

DETAILS

ITEM	PROT STEEL	PVC	HDPE
NETWORK INSTALLED	$965,000	$577,000	$502,000
LIFE IN YEARS	40	40	40
SALVAGE VALUE	0	0	0
SERVICE FOR 20,000	--	--	--

ANNUAL COSTS

O & M	--	--	--
PIPE REPAIR	--	--	--
RECOVERY FACTOR 10%	0.10226	0.10226	0.10226
CAPITAL RECOVERY	$98,680	$59,004	$51,334
TOTAL			

COST PER CUM WATER

DESIGN	$0.17	$0.10	$0.09
80% DESIGN	0.21	0.13	0.11

EXAMPLE 5

DETAILS

ITEM	PROT STEEL	PVC	HDPE
NETWORK INSTALLED	$965,000	$577,000	$502,000
LIFE IN YEARS	20	20	20
SALVAGE VALUE	0	0	0
SERVICE FOR 20,000	--	--	--

ANNUAL COSTS

O & M	--	--	--
PIPE REPAIR	--	--	--
RECOVERY FACTOR 10%	0.11746	0.11746	0.11746
CAPITAL RECOVERY	$113,348	$67,774	$58,965
TOTAL			

COST PER CUM WATER

DESIGN	$0.19	$0.12	$0.10
80% DESIGN	0.24	0.15	0.13

EXAMPLE 6 (BOT)

DETAILS

ITEM	PROT STEEL	PVC	HDPE
NETWORK INSTALLED	$965,000	$577,000	$502,000
LIFE IN YEARS	12	12	12
SALVAGE VALUE	0	0	0
SERVICE FOR 20,000	--	--	--

ANNUAL COSTS

O & M	--	--	--
PIPE REPAIR	--	--	--
RECOVERY FACTOR 15%	0.18448	0.18448	0.18448
CAPITAL RECOVERY	$178,023	$106,445	$92,609
TOTAL			

COST PER CUM WATER

DESIGN	$0.30	$0.18	$0.16
80% DESIGN	0.38	0.23	0.20

NOTE OF INTEREST

THE HEAD LOSS DIFFERENCE BETWEEN PLASTIC AND STEEL PIPES IS <u>59 METERS</u> PER KILOMETER

- **FOR A 2 1/2 INCH PIPE CARRYING 1/2 CUM/MIN (approx 100 gal/min)**

THIS TRANSLATES TO A PUMPING COST OF $5067/KM/YEAR OR 2 CENTS PER CUM OF WATER

- **IF ELECTRICITY COSTS 10 CENTS PER KWH, PUMP EFFICIENCY IS 70% AND MOTOR EFFICIENCY IS 90%**

WATER SYSTEM DESIGN SEMINAR

MAY 14 AND MAY 15, 1996

(PART III)

PRESENTERS:

DANIEL GALLAGHER, P.E

AND

FRED ZOBRIST, P.E.

SPONSORED BY:

USAID/WEST BANK AND GAZA

AND

UNDP JERUSALEM OFFICE

CONTRACT NUMBER:
HNE-0159-C-00-3080-00

MANAGEMENT SYSTEMS INTERNATIONAL

257

INTRODUCTION

This is Part III of a three part report on the Water System Design Seminar conducted at Beir Zeit University on May 14 and May 15, 1996. Parts I and II of the report were printed earlier and are included in a single volume. For additional information on the seminar contact the USAID engineering office in Tel-Aviv.

Table of Contents

I. Hydraulic equations

A. Bernoulli's Energy Equation

Water flow in pipes may have 3 types of energy or head: velocity, pressure, and potential or elevation. The general energy equation for incompressible water flow between any two points in a system is given by Bernoulli's equation

$$\frac{p_1}{\gamma}+\frac{V_1^2}{2g}+z_1=\frac{p_2}{\gamma}+\frac{V_2^2}{2g}+z_2+h_L$$

where p = pressure, γ = specific weight, g = gravity, V = velocity, z = elevation above some datum, and h_L = headloss due to friction. Pumps may be used to add energy to the system. There are various methods used to estimate the friction headloss in a pipe. Three are described below: Hazen Williams, Manning, and Darcy Weisbach.

B. Hazen Williams

The Hazen Williams equation is an empirical relationship commonly used for pipes flowing full in pressurized systems. Thus it is the most common formula for the design of water distribution networks.

The SI version of the Hazen Williams formula is

$$V = 0.849CR^{0.63}S^{0.54}$$

where V = velocity in m/s, C = coefficient, function of pipe material and age, R = hydraulic radius (flow area divided by wetted perimeter) in m, and S = slope of energy grade line (headloss per length, h_L/L, if due to pipe friction). Note that if different units are used, the factor 0.849 will change accordingly.

For circular pipes flowing full, the hydraulic radius = pipe diameter/4, and the Hazen Williams equation can be rewritten in terms of flow

$$Q = 278CD^{2.63}S^{0.54}$$

where Q is pipe flow in L/s and D is pipe diameter in m.

The Hazen William's C factor decreases as roughness increases. Typical values for the Hazen Williams coefficients are

Pipe Material	Hazen William's C
new cast iron	130
5 yr old cast iron	120
20 yr old cast iron	100
average concrete	130
new welded steel	120
asbestos cement	140

C. Manning

More commonly used for open channel flow such as sewers, although some engineers also use it pressurized systems. The SI units Manning equation is

$$V = \frac{1}{n} R^{2/3} S^{1/2}$$

where V = velocity in m/s, n = coefficient of roughness, R = hydraulic radius in m, and S = slope of energy grade line.

For circular pipes flowing full, the hydraulic radius = pipe diameter/4, and the Manning equation can be rewritten in terms of flow

$$Q = \frac{312}{n} D^{8/3} S^{1/2}$$

where Q is pipe flow in L/s and D is pipe diameter in m.

Manning's n increase as roughness increases. Typical values are given below.

Material	Manning n
concrete	0.013
cast-iron pipe	0.015
vitrified clay	0.014
brick	0.016
corrugated metal pipe	0.022
bituminous concrete	0.015
uniform firm sodded earth	0.025

D. Darcy-Weisbach

More fundamental than the other equations. Friction factor varies with turbulent/laminar flow condition.

$$h_L = f \frac{LV^2}{2Dg}$$

where h_L = head loss, L = pipe length, D = pipe diameter, f = friction factor, V = velocity. the friction factor f is a function of relative roughness of pipe (pipe material and age) and Reynolds number. It is usually determined from a Moody diagram.

The Darcy Weisbach formula can be rearranged to yield

$$v = \left(\frac{2gDS}{f} \right)^{1/2}$$

Notice that for a given pipe, all of these equations have the form

$$h_L = K\,Q^a$$

where K = a coefficient for a given pipe and depends upon its length, diameter, age, material, etc. K is a constant for the Hazen Williams and Manning equations but varies with Q (through the Reynolds number) for the Darcy Weisbach

a = constant exponent that depends on the formula used

E. Minor losses

Minor losses for turbulent flow conditions are generally expressed as a function of $V^2/2g$ the velocity head. For long pipes, pipe friction headloss usually predominates and minor losses can be neglected. For shorter pipes such as those in treatment plant, minor losses can be important.

II. Pumps

Capacity of a pump is expressed as flow delivered. The head required to overcome losses in a pipe system is termed system head. The total dynamic head is the head against which the pump must work when water is being pumped. This is the head added to the system by the pump and can be calculated as the difference in head using Bernoulli's equation between the discharge and suction nozzle of the pump.

The power input for a pump is a function of the flow, head, and efficiency of the pump. Typical efficiencies range from 60-90%.

$$E_p = \frac{pump\ output}{power} = \frac{\gamma\ QH_t}{P}$$

A. Pump head - capacity curve

The head that a constant speed pump can produce as flow changes called pump head - capacity curve or pump characteristic curve. The system curve is the plot of the total dynamic head(sum of the static lift + kinetic energy losses).

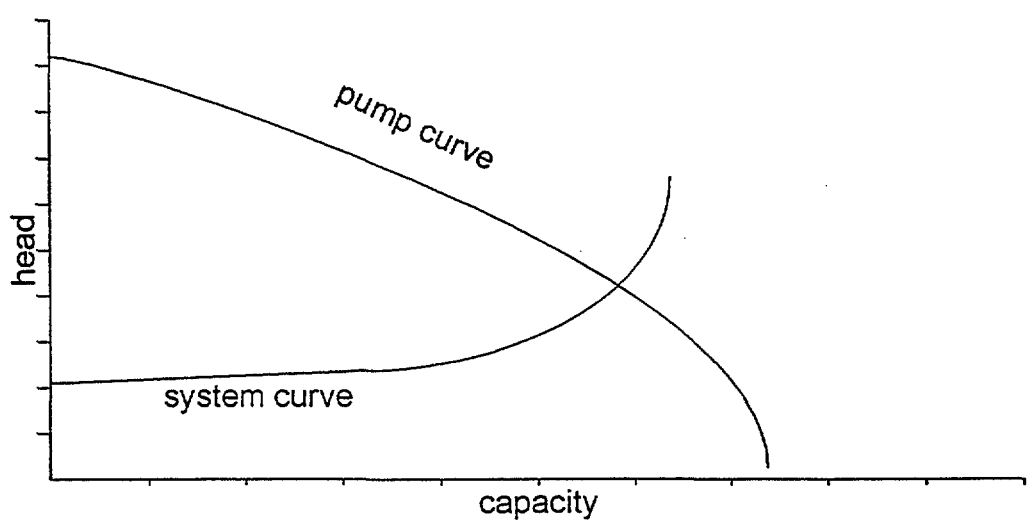

The operating point for the pump is defined by the intersection of the pump head curve and the system curve.

III. Valves

A. check

Check valves permit flow in only one direction. Commonly used to prevent flow reversal of flow when pumps are shit off. Check valves, termed foot valves, can be installed on the suction side of pump to prevent loss of prime. Check valves are installed on the discharge side of pump to reduce hammer force.

B. pressure reducing

Pressure reducing valves maintain a set pressure on the downstream end. Operate by using the upstream pressure to throttle the flow through an opening similar to globe valve. The throttling valve will open or close until the downstream pressure reaches the preset value.

C. pressure sustaining

Pressure sustaining valves attempt to maintain a minimum pressure on the upstream end when the downstream pressure is below that value. If the downstream pressure is above the setting, flow is unrestricted. If the downstream pressure is above the upstream pressure, valve will close to prevent reverse flow.

D. pressure breaker valves

Pressure breaker valves for a specified pressure loss across the valve.

E. flow control valves

Flow control valves to limit the flow through a valve to set amount, providing sufficient head is available.

F. throttle control valves

Throttle control valves simulate a partially closed valve by adjusting the minor loss coefficient of the valve.

G. gate valves

Most commonly used for on-off service. Relatively inexpensive and offer positive shutoff. Located throughout a distribution system at regular intervals so that breaks in the system can be isolated. Valves should be accessible through manhole of valve box. Generally must be installed in vertical position. Large gate valves frequently include small bypass valve to equalize pressure on the main valve and reduce potential for water hammer.

H. butterfly valves

Less expensive and easier to operate than gate valves. Not suitable for liquids that contain solids and light prevent complete closure.

I. air vacuum and air relief valves

Used in long pipes at high points to prevent negative pressure from building up if lines are drained or to allow accumulated air to be released. Operate automatically.

J. Altitude-control valves

A type of diaphragm-valve used to control level of water in a tank supplied from a pressure system. Two types are used: single acting and double acting. Single acting used only for filling the tanks. The tank discharges through a separate lined or through a check valve in a bypass line around the altitude valve. A double acting altitude valve allows water to flow both to and from the tank. When the tank becomes full, the valve closes to prevent overflow. When the distribution pressure drops below the pressure exerted by the full tank, the valve opens to discharge water to the distribution system.

K. globe and angle valves

Not commonly used in water distribution system. Primary application is household plumbing.

IV. Storage

Storage is provided to equalize supply and demand, level out pumping requirements, provide water during source or pump failure, provide water to meet fire demands, provide surge relief, and to blend water sources. With adequate storage, water can be treated and pumped from the treatment plant to the distribution system at a rate equaling the maximum day demand and pumps can be operated at their rated capacity. Storage can also be used if the treatment plant operates for only a portion of a day.

A. Types of water storage facilities

1. types of service

a) operating storage

Operating storage generally floats on the system with the reservoir filling when demand is low and emptying when demand exceeds supply. A mass balance can be used to size the operating storage.

Given the following demand rates, find the required operational						
storage assuming 24 hr pumping.						
Time Interval		Demand	Hourly	Hourly	Supply - Demand	
start	end	Rate	Demand	Supply	to	from
		gpm	gal	gal	storage	storage
12:00 AM	1:00 AM	1900	114000	280460	166460	0
1:00 AM	2:00 AM	1800	108000	280460	172460	0
2:00 AM	3:00 AM	1795	107700	280460	172760	0
3:00 AM	4:00 AM	1700	102000	280460	178460	0
4:00 AM	5:00 AM	1800	108000	280460	172460	0
5:00 AM	6:00 AM	1910	114600	280460	165860	0
6:00 AM	7:00 AM	3200	192000	280460	88460	0
7:00 AM	8:00 AM	5000	300000	280460	0	-19540
8:00 AM	9:00 AM	5650	339000	280460	0	-58540
9:00 AM	10:00 AM	6000	360000	280460	0	-79540
10:00 AM	11:00 AM	6210	372600	280460	0	-92140
11:00 AM	12:00 PM	6300	378000	280460	0	-97540
12:00 PM	1:00 PM	6500	390000	280460	0	-109540
1:00 PM	2:00 PM	6460	387600	280460	0	-107140
2:00 PM	3:00 PM	6430	385800	280460	0	-105340
3:00 PM	4:00 PM	6500	390000	280460	0	-109540
4:00 PM	5:00 PM	6700	402000	280460	0	-121540
5:00 PM	6:00 PM	7119	427140	280460	0	-146680
6:00 PM	7:00 PM	9000	540000	280460	0	-259540
7:00 PM	8:00 PM	8690	521400	280460	0	-240940
8:00 PM	9:00 PM	5220	313200	280460	0	-32740
9:00 PM	10:00 PM	2200	132000	280460	148460	0
10:00 PM	11:00 PM	2100	126000	280460	154460	0
11:00 PM	12:00 AM	2000	120000	280460	160460	0
		Sum:	6731040	6731040	1580300	-1580300
Average hourly pumping:			6,731,040 / 24 =		280460	
Required storage:			1580300			

b) emergency storage

Designed to be used only in exceptional situations such as fires or source failures.

2. configuration

a) tanks

Generally refers to any structure used for containing water. Elevated tanks are supported on steel or concrete tower. Ground level tanks are less expensive to build and operate, but may require a booster pump to provide adequate pressure.

b) standpipes

Tank resting on the ground with a height greater than its diameter. Generally only the upper portion has enough pressure to be used in the distribution system. The lower portion can be used for emergency storage.

c) reservoirs

Reservoirs generally refers to very large storage facilities. Can be ponds, lakes, etc. More common to use reservoirs for raw water storage rather than treated water.

d) pneumatic tanks

Used in very high or remote areas with few customers. Consists of steel pressure tank partially filled with pressurized air. The compressed air on top of the water provides necessary pressure to the area. A small booster pump is located on the intake side of the tank. The pump is only turned on when the pressure in the tank drops below a set level. The maximum amount of water that may be withdrawn at any time is approximately 1/3 the total tank volume.

3. Construction material

Tanks can be made from steel or concrete with an appropriate liner.

4. Location

To minimize pipe diameters, elevated storage facilities are usually located in regions of the service areas where pressure is low, i.e. as close to the center of demand as reasonable. The water level in the reservoir must be at a sufficient elevation to permit gravity flow at an adequate pressure. Reduced pipe diameters can be used near a reservoir because the water will flow in all directions away from the tank when it is supply water. Elevated storage facilities near the treatment plant generally do not allow for reduced pipe diameters. Decentralized storage with several smaller tanks in different parts of the distribution system are usually preferred compared to one large tank.

Ground-level storage with booster pumps is often used when the system has several pressure zones. Storage is located at the boundaries of these pressure zones. Water from the lower pressure zone flows into the reservoir and is pumped to the higher pressure zone.

B. "Floating" storage tanks

During periods of low flow, usually in late evening, the heads in the distribution system are low and the storage tank is filled automatically. Altitude control valves can be used to shut off flow when the storage tank is full. As the demand increases during the day, the head in the distribution system falls and the entire capacity of the treatment pumps is used to meet demands. As demand increases further, the excess demand is met from the storage tank and the tank begins to empty.

V. Hydraulic modeling

Pressures (heads) should be adequate for consumers and fire fighting. This influences the diameters chosen. If help is needed to maintain pressure, in-line booster pumps and elevated storage tanks can be used. Typical pressures in residential areas of the US range from 40 to 50 psig (90 to 115 feet of head). Pipe sizes should be large enough to avoid excessively high or low velocities. Generally 3 to 4 feet per second is considered desirable. The National Board of Fire

Underwriters requires a minimum of 8 in diameter pipe, although 6 inch diameter pipe can be used in the grid system.

Hydraulic models for distribution systems should be analyzed for conditions that exist now as well as for conditions that exist at the end of the design period. Headlosses are expected to increase as pipes age.

A. Notation and data requirements

Distribution systems are generally based on a link-node framework. Links are use to represent the pipes. Nodes represent locations where flows enter or leave the system or where links join together. Nodes should be placed wherever pipe characteristics (e.g. diameter or material) change or to provide sufficient resolution for water demands. Demands are typically not modeled at the level of individual households - rather a group of households are clumped together and the demands are located at one common point.

1. Water System Inventory

a) inventory existing facilities

(1) pipe location and diameter, length, type, age, present condition

(2) storage facilities: capacity, location, availability, dimensions, water surface elevations, connections to system

(3) design and operation features of service and booster pumps, including capacity, system head, elevation

(4) control and regulatory valves elevation, operation, pressure setting, purpose

(5) service areas and pressure zone boundaries

b) review operating records and interview staff

(1) diurnal and seasonal treated water production records

(2) service and booster pump flows and pressures

(3) clearwell and storage level variations for different demand situations

(4) system operation criteria for pump stations, storage, source pumps

(5) system operating pressures determined from past testing or monitoring

(6) power consumption records, costs, and rate structure

(7) observed low pressure areas indicating system deficiencies

(8) observed fire flow capabilities

c) *review water consumption records*

(1) total water sales (billing records)

(2) service population

(3) number and types of connections

(4) consumption by major users

(5) peaking factors

(6) system diurnal demand curves

d) ***develop water demands using consumption records and population and land use projections. Existing and projected demands should be established for the total system, sub areas within the system, and major users.***

(1) average annual day demands

(2) maximum day demands

(3) peak hour demands

(4) fire flow demands

(5) minimum hour demands or maximum storage - replenishment rate

(6) other site specific demand features

e) ***establish background information for power management and operational improvement programs***

(1) plot pump characteristic curves vs system head curves

(2) establish average maximum day pumping rate from the developed diurnal demand curve

(3) determine whether system storage or auxiliary power can be used to reduce peak pumping rate to or below the average of the maximum day demand.

(4) check the piping arrangements to storage complexes for replenishment constraints

(5) examine pump curves vs system head curve conditions to determine optimal operation sequence based on system demands

2. Required physical data

a) *pipe segments*

(1) assign ID numbers

(2) establish length between nodes

(3) determine pipe diameter, roughness coefficient (age and pipe material)

b) *nodes*

(1) assign ID numbers

(2) establish ground surface elevations of each node

If read from contour map, 1 m contours desirable, 3 m contours acceptable if no other data. Errors arise from interpolated contours. (Note 1 ft error = 0.43 psi.) Generally, ground surface elevations are used, not the elevations of the buried pipe.

Accurate data needed for pressure control points - points where system pressure fixed or open to atmosphere - and pressure regulated discharge points. Other node elevations can be estimated.

c) *supply pumps and booster pumps*

(1) assign ID numbers (EPANET treats as links, other programs as nodes)

(2) determine multiple points on pump curve

(3) define on/off control levels based on system pressure or tank elevations)

(4) determine ground surface elevation for each pump

(5) assign valve or adjust pump curve for minor losses

d) *control valves and pressure regulating valves*

(1) assign ID number (EPANET treats as links, other programs as nodes)

(2) determine downstream pressure setting for each PRV

(3) determine control pressures for flow control valves

(4) establish ground surface elevations

e) *reservoirs and storage facilities*

(1) assign ID number (treated as nodes)

(2) define capacity, dimensions, flow rate, and operating range

(3) establish ground surface and water surface elevations

B. Branched distribution systems

There are 2 general classes of piped distribution systems: branched and looped. A branched network contains no closed circuits or loops. Pipes can simply dead end. Branched networks are found on the outskirts of many towns, in rural communities, in irrigation systems, and frequently in villages in developing countries. Branched distribution systems have a structure similar to a tree. A trunk line provide the major source of water. Service mains and submains branch off the trunk line. Branched distribution systems have several limitations: stagnation in the dead ends may allow for bacterial growths and sedimentation, disinfectant residuals are hard to maintain in the dead ends, repairs will shut down service for all connections beyond the repair point, the pressure at the end of the line may become undesirable low as additional corrections are made.

(a) (b)

Examples of branched distribution systems

On the other hand, branched distributions are simple to design and construct, and are less costly than looped systems. When branched networks are used, the cost of the network is often of major concern. Branched networks use less pipe than looped networks, and therefore cost significantly less. An interesting problem is to design a branched distribution network that has minimum cost for a specified layout. Once the layout is established, the major factors affecting cost are the diameters used throughout. These must be chosen to maintain necessary heads at each point in the distribution system. This problem requires an understanding of both fluid flow in pipes and optimization techniques. As stated, the problem can be formulated as a linear programming problem. A linear program optimizes a linear objective function that is subject to a series of linear equality and inequality constraints. The problem will be illustrated through the use of an example. Given the example network below

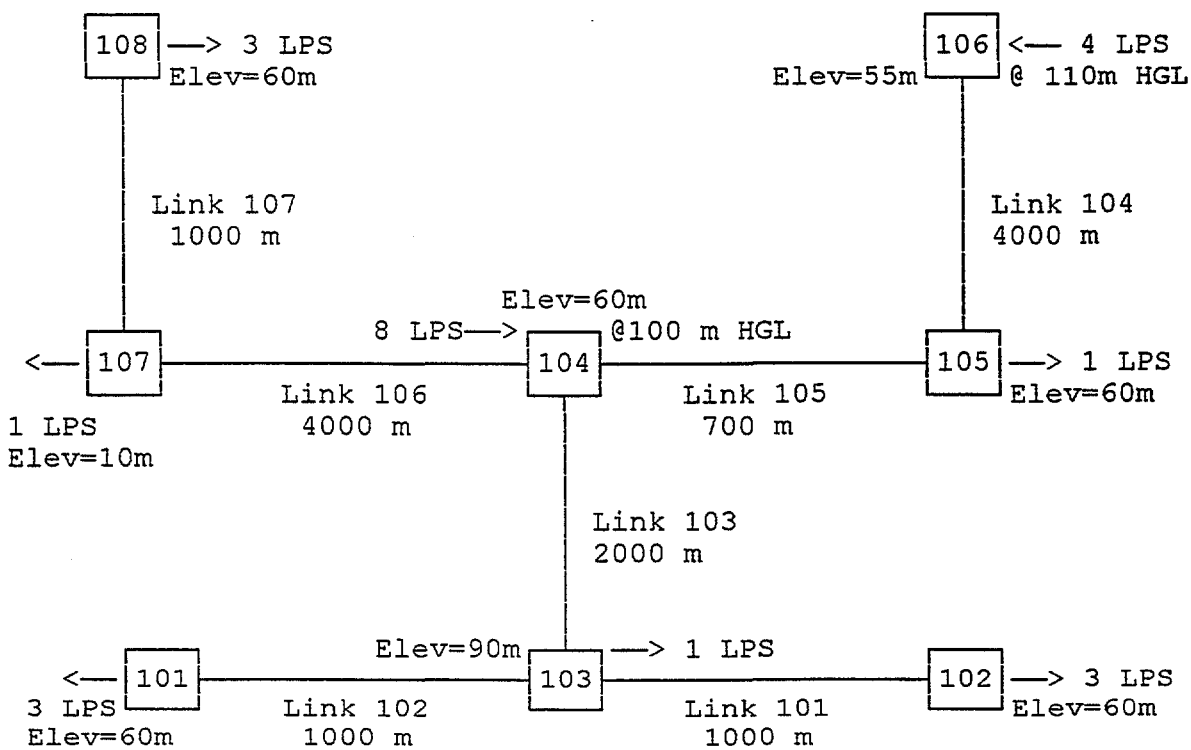

The example network consists of 7 pipe segments or links which are connected by 8 nodes. Each node is a point of water input or demand or a junction between two pipes. The network contains no closed loops, hence it is a branched network and the link flows may be easily determined from the mass balance equations alone. Inputs to the network occur at nodes 104 and 106. These inputs have known hydraulic grade line elevations. All other nodes are either demand or junction nodes. Two links, 105 and 106, are existing, with 10 cm diameters. It is assumed that link 105 will

remain unchanged, while link 106 will be paralleled with new pipe if necessary. All other links will be designed using new pipe.

The design objective is to select pipes for the links in such a manner that the total construction cost is minimized subject to certain design constraints. Both the objective and the constraints can be written as linear equations or inequalities. The resulting problem is called a linear program. The mathematical trick that permits the formulation of the problem as a linear program is that pipe length, rather than pipe diameter, is treated as the unknown or decision variable. Thus, the engineer proposes commercially available pipe diameters as candidates for each link, and the linear programming algorithm selects from these candidates the optimal combination. Different sets of pipe diameters for different links are allowed. The optimal combination of pipes for each link would then be laid in series along the link.

The candidate pipe diameters for the example network are 5 cm, 10 cm, and 20 cm. The decision variables are:

x_1 = the length of 5 cm pipe to be used in link 101
x_2 = the length of 10 cm pipe to be used in link 101
x_3 = the length of 20 cm pipe to be used in link 101
x_4 = the length of 5 cm pipe to be used in link 102
x_5 = the length of 10 cm pipe to be used in link 102
x_6 = the length of 20 cm pipe to be used in link 102
x_7 = the length of 5 cm pipe to be used in link 103
x_8 = the length of 10 cm pipe to be used in link 103
x_9 = the length of 20 cm pipe to be used in link 103
x_{10} = the length of 5 cm pipe to be used in link 104
x_{11} = the length of 10 cm pipe to be used in link 104
x_{12} = the length of 20 cm pipe to be used in link 104
x_{13} = the length of 10 cm pipe to be used in link 105
x_{14} = the length of 10.8 cm pipe to be used in link 106*
x_{15} = the length of 14 cm pipe to be used in link 106*
x_{16} = the length of 23.7 cm pipe to be used in link 106*
x_{17} = the length of 5 cm pipe to be used in link 107
x_{18} = the length of 10 cm pipe to be used in link 107
x_{19} = the length of 20 cm pipe to be used in link 107

* These are equivalent diameter pipes. x_{14} is the equivalent diameter of the existing 10 cm and the candidate 5 cm. Similarly, x_{15} is the equivalent of the existing 10 cm and the candidate 10 cm, and x_{16} is the equivalent of the existing 10 cm and the candidate 20 cm.

The installed costs per unit length of the candidate pipe are \$15/m for the 5 cm pipe, \$50/m for the 10 cm pipe, and \$100/m for the 20 cm pipe. Installed pipe has an associated cost of \$0/m, regardless of its diameter. The construction cost is thus

$$\begin{aligned} \text{COST} = {} & 15\,x_1 + 50\,x_2 + 100\,x_3 + 15\,x_4 + 50\,x_5 + 100\,x_6 + \\ & 15\,x_7 + 50\,x_8 + 100\,x_9 + 15\,x_{10} + 50\,x_{11} + 100\,x_{12} + \\ & 0\,x_{13} + 15\,x_{14} + 50\,x_{15} + 100\,x_{16} + 15\,x_{17} + \\ & 50\,x_{18} + 100\,x_{19} \end{aligned}$$

The constraints on the design variables consist of both equalities and inequalities. These constraints impose both headloss and length restrictions on the decision variables. There are 3 type of headloss constraints that may be imposed at each node. The first type says that the residual head at the node must be greater than or equal to some specified head. This is used to insure that there is minimum positive pressure at the specified nodes. An alternative constraint is that the residual head must be less than or equal to some specified head. This type of constraint are used in hilly terrains to prevent exceeding the allowable pipe pressure or to prevent excessive pressures at nodes. The final type of constraint is that the residual head is equal to some known head. This constraint is used in networks with more than one input node to insure that the headloss along the path from the two nodes is equal to the difference in the hydraulic grade lines (HGL). Paths are referenced from a specified input node called the reference node. This last type of constraint must be imposed where more than one input occurs. The other constraints may be imposed as needed. In general, minimum pressure constraints are imposed at the extremities of the network, i.e. the terminal or end nodes. Maximum pressure constraints are imposed at low elevation points on hilly terrain. The linear programming technique automatically adds constraints that all the decision variable be nonnegative. Since theses variable represent lengths in this problem, these additional constraints are not a difficulty. If the minimum allowable head is 1 meter, and this constraint is to be applied to nodes 101, 102, 103, and 108, and node 104 is taken as the reference node, the constraints can be written as

$$hL_{103} + hL_{102} <= 100 - 60 - 1 = 39$$
$$hL_{103} <= 100 - 90 - 1 = 9$$
$$hL_{103} + hL_{101} <= 100 - 60 - 1 = 39$$
$$hL_{106} + hL_{107} <= 100 - 60 - 1 = 39$$

where the subscripts on the headloss refer to the links, 100 is taken from the HGL of the reference node, 60 and 90 are the ground elevations of the constrained nodes, and 1 is the minimum residual head.

If the head at node 107 is constrained not to exceed 55 m, then its constraint can be written as

$$hL_{106} >= 100 - 10 - 55 = 35$$

Since there are two input nodes, with fixed HGL's, an additional constrain must be written

$$hL_{105} + hL_{104} = 100 - 110 = -10$$

Nodes 104 and 105, as interior nodes, probably do not need to be constrained on the first design. If the initial results suggest that constraints are necessary, they may be added and second design performed.

The headlosses are calculated for each of the candidate pipes using one of the flow equations, typically the Hazen Williams equation. The headloss can be calculated from

$$h_{Lij} = (Q_i/k_iC_i)^{1.85} D_j^{-4.87} L_j$$

where h_{Lij} = headloss in pipe j in link i
Q_i = flow in link i
k_i = constant for link i that depends on units
C_i = Hazen Williams coefficient in link i

D_j = diameter of pipe j

For example, in link 101, three different diameter pipes may be used to make the link.

Additional constraints must be added to insure that the lengths of the candidate diameters match the needed total length of each pipe. These constraints are

$$
\begin{aligned}
x_1 + x_2 + x_3 &= 1000 \\
x_4 + x_5 + x_6 &= 1000 \\
x_7 + x_8 + x_9 &= 2000 \\
x_{10} + x_{11} + x_{12} &= 4000 \\
x_{13} &= 700 \\
x_{14} + x_{15} + x_{16} &= 4000 \\
x_{17} + x_{18} + x_{19} &= 1000
\end{aligned}
$$

The linear programming automatically adds the constraints that

$$x_i >= 0 \qquad i = 1,\ldots,19$$

The problem, then, is to choose the xi's that minimize the cost, but meet all of the constraints. A computer program, BRANCH, that sets up and solves this type of problem is included along with user instructions. The basic solution from the linear programming algorithm is

Link #	Diameter (cm)	Length (m)
101	5	129.6
	10	870.4
102	5	129.6
	10	870.4
103	10	231.1
	20	1768.9
104	10	115.9
	20	884.1
105	10	700.0
106	10.8	1883.9
	14.0	2116.1
107	10	607.9
	20	392.1

These diameters and lengths just meet each of the constraints that were imposed, using as much of the smaller, less expensive diameter pipe as possible.

Pipes are assumed to be laid in order of decreasing diameter in the downstream direction. Thus for link 104, the 20 cm pipe should be laid from node 106 (the upstream node) and then the 10 cm pipe used to complete the distance to node 105 (the downstream node). This ensures that the downstream nodes exceed the minimum pressures when such constraints are used.

It may not be possible to meet all the constraints with any combination of the candidate diameters. In this case the algorithm will return with a solution labeled infeasible. For example, the headloss from the reference node to a node with a minimum pressure constraint may be greater than allowable to meet the constraint even when the largest candidate diameter is used for the entire link.

The problem would then be infeasible. To attempt to correct this situation, make larger diameter pipes available on paths subject to minimum head constraints, smaller diameter pipes available on paths with maximum head constraints, and both larger and smaller diameters available on paths link nodes with known hydraulic grade lines.

C. *Looped distribution systems*

A distribution system with loops or circuits can provide the reliability that a branched network cannot. If a break occurs, water is able to flow through the remaining pipes in the loop and move downstream. Since flow occurs in all pipes, the water quality should not have sufficient time to deteriorate if the network is designed properly. Typical loop patters include a grid pattern with a central feeder line that normally carries the bulk of the flow (Figure 2a) or a grid pattern with a main looped feeder (Figure 2b).

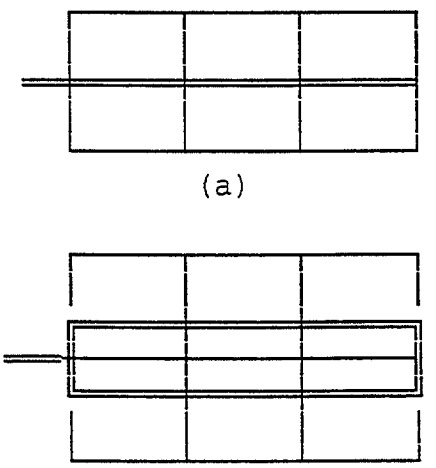

Figure 2. Examples of Looped Distribution Systems

The pressures and flows in looped distribution systems are solved by writing a series of nonlinear equations based on conservation of flow and energy.

1. continuity equations / conservation of flow

There are two type of equations that are used to determine the flows in the links. The first type is based on conservation of mass, sometimes called a mass balance. It simply states that the sum of the flows entering a node must equal the sum of the flows leaving a node. Thus at each junction

$$\sum Q_{inflow} = \sum Q_{outflow}$$

2. flow equations around loops

The second type of equation is based on the conservation of energy. It states that the sum of the signed head losses around a loop equals the energy input from any pumps on the loop. If there are no pumps, the headlosses must sum to zero. In other words, the energy at a node is the same no matter what direction the node is approached from.

$$\sum h_l = \sum E_p \quad \text{(for each primary loop)}$$

where E_p = energy added to water by pumps

276

Note that a sign convention must be adopted to properly sum the headlosses. Typically, flows in a clockwise direction around a loop are considered positive. For example, for the loop and the flow directions given

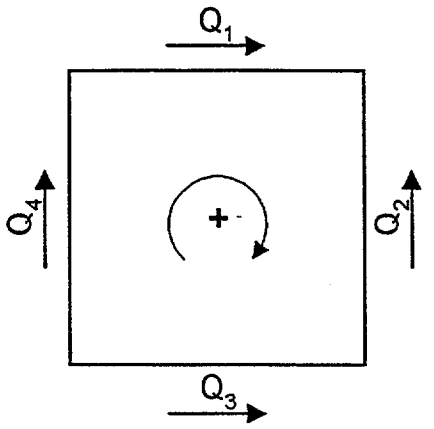

$$\sum h_L = h_{L1} - h_{L2} - h_{L3} + h_{L4}$$

A second type of energy equation can be written for any two fixed grade nodes, which says that the sum of the headlosses along any path connecting the fixed head nodes must equal the difference in heads between the nodes.

$$E = \sum h_L - \sum E_p \qquad \text{(for each R - 1 pair of fixed head reservoirs)}$$

3. solution techniques

a) unknown flows

If the flows in each pipe are treated as unknown, then L equations must be written to solve for these flows. N of the equations are the mass balance equations at the nodes, P are energy balance equations around each primary loop, and R-1 equations are the energy balance between fixed head reservoirs. The mass balance equations are linear in terms of the flows. The energy equations are written in terms of the flow in the pipe using any one of the flow equations discussed above, e.g. the Hazen Williams equation. The resulting energy equations are nonlinear in terms of the flows. Thus, a system of L nonlinear equations must be solved to provide the flows. Three methods are available:

(1) single link flow adjustment

This method was developed by Hardy Cross and is one of the most commonly used. It is suitable for hand calculation. The technique requires an initial estimate of the flows that satisfy the mass balances at each node. Given these flows, a flow adjustment factor for each loop is calculated based on the energy equations. This adjustment factor is added to the flows in the pipes in the appropriate loop, resulting in an updated estimate of the flows. The process is repeated using the

current flow estimates until the adjustment factors fall below some specified criterion. An example and a computer program for the Hardy Cross solution of looped networks is given below.

(2) simultaneous flow adjustment

This technique solves the system on nonlinear equations based on Newton's method or one of its variations. Again, an initial estimate of flows is required. A flow adjustment factor is calculated for each pipe simultaneously, resulting in improved flow estimates. This process is repeated until the adjustment factors fall below some specified criterion.

(3) linear method

This method approximates the energy equations with linear relationships in terms of approximate flows

$h_L = [K\, Q(0)^{a-1}]\, Q$

where $Q(0)$ = the initial or previous estimate of the flow

Q = the current estimate of the flow, i.e. the unknown to be solved for

This formulation results in a system of L linear equations which can easily be solved for the new flow estimates. The process is iterated until the changes in flows between any successive iterations falls below some specified criterion.

b) unknown heads

Methods which treat the heads at nodes as unknown require N independent equations. These are provided by the mass balance equations written in terms of heads between adjacent nodes. For example, the flow in the link with nodes 1 and 2 as end nodes can be calculate from

$$Q_{1-2} = \left| \frac{h_1 - h_2}{k_{1-2}} \right|^{1/a}$$

Writing each of the mass balances with the above equation substituting for each flow results in a system on N nonlinear equations to be solved. Since there are generally less nodes than there are links, this solution technique requires less space on a computer. Two methods are available for solution.

(1) single head adjustment

This method was also described by Hardy Cross, but is not as widely used. Initial heads at each of the nodes are first assumed. Head adjustment factors are calculated based on the mass balance at the node. This process is repeated until the adjustment factors are less than the convergence criterion.

(2) simultaneous head adjustment

This technique solves the system of nonlinear equations based on Newton's method or one of its variations. Again, an initial estimate of heads in required. A head adjustment factor is calculated for each node simultaneously, resulting in improved head estimates. This process is repeated until the adjustment factors fall below some specified criterion.

c) *Hardy Cross*

The Hardy Cross method was used for may years. It is suitable for simple networks and can be solved by hand. The method calculates successive flow corrections to the pipes in a primary loop. Hardy Cross is not recommended if alternative computer solutions are available, as Hardy Cross does exhibit convergence problems at times. The approach is

1) Assume flow distribution within each pipe. Flow continuity must be established at each junction node. The headloss equations do not have to be satisfied. However, the closer the initial flow distribution is to the actual flows, the more quickly the method will converge.

2) Choose a direction around a loop that will be considered positive. Traditionally, clockwise direction is chosen.

3) For each primary loop, determine the headloss in each pipe, using one of the hydraulic equations discussed above (e.g. Hazen Williams). A sign is given to the headloss based on the direction of flow and the sign convention.

4) Sum the signed headlosses and sum the signed headlosses divided by flow.
5) Calculate the flow correction for the loop by

$$\Delta Q_{loop} = -\frac{\sum h_L}{1.85 \sum {h_L}/{Q}}$$

(Note the minus sign in the formula.)

6) Apply the correction to the assumed flow in each pipe in the loop.

7) Repeat steps 3-6 for the other primary loops
8) Iterate steps 3-7 for each primary loop until each calculated correction is sufficiently small. If the initial flows were approximately correct, the Hardy Cross method will usually converge in 3 iterations.

Note that in applying corrections to pipes common to two loops the corrections for both loops are made to the common pipes. This is required to maintain flow continuity at junctions.

Example: Solve for the flows in the following network. Use Hazen Williams to calculate headloss. All the nodes have elevation 0. All the pipes have a C = 100.

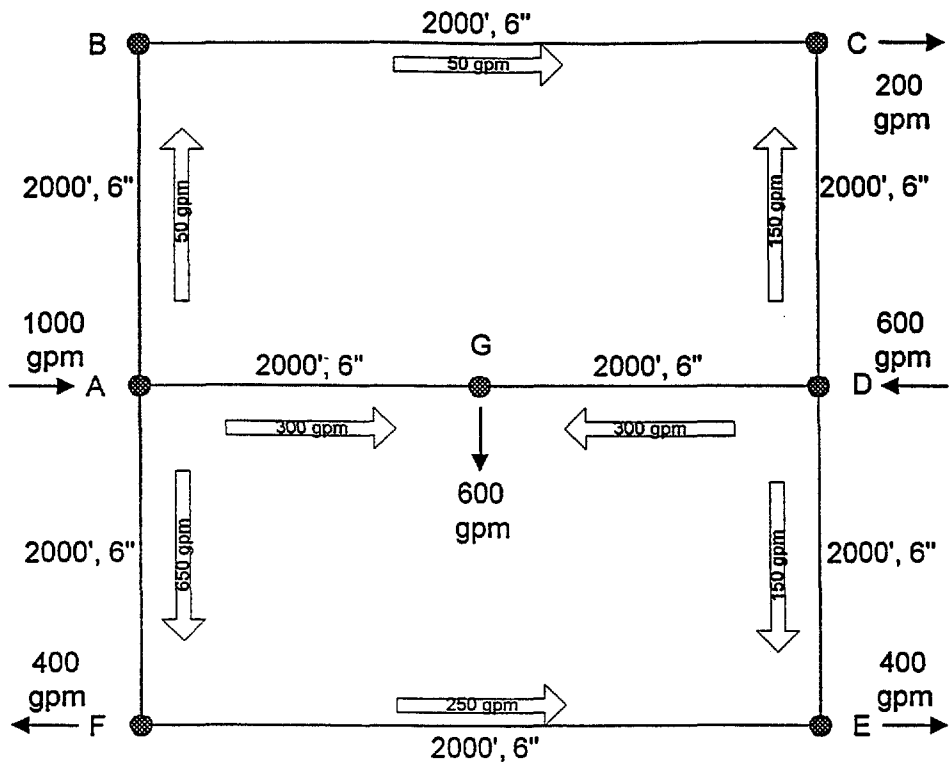

ITERATION 1							
Link	Diam	Length	Flow	h_L/L	h_L	h_L/Q	new flow
	in	ft	gpm	ft/ft	ft	ft/gpm	gpm
AB	8	1000	50	0.000116	0.11602	0.00232	60.4
BC	6	2000	50	0.000471	0.942024	0.01884	60.4
CD	6	1000	-150	-0.0036	-3.60238	0.024016	-139.6
DG	6	1000	300	0.013003	13.00327	0.043344	310.4
GA	6	1000	-300	-0.013	-13.0033	0.043344	-289.6
				sum	-2.54434	0.131865	
				delta flow	10.42972		
AG	6	1000	289.6	0.012179	12.17853	0.042057	301.3
GD	6	1000	-310.4	-0.01385	-13.8528	0.044625	-298.7
DE	4	1000	150	0.025955	25.9549	0.173033	161.7
EF	6	2000	-250	-0.00928	-18.5546	0.074218	-238.3
FA	8	1000	-650	-0.01341	-13.4089	0.020629	-638.3
				sum	-7.68281	0.354562	
				delta flow	11.71268		

280

ITERATION 2							
Link	Diam	Length	Flow	h_L/L	h_L	h_L/Q	new flow
	in	ft	gpm	ft/ft	ft	ft/gpm	gpm
AB	8	1000	60.4	0.000165	0.16478	0.002727	67.9
BC	6	2000	60.4	0.000669	1.33793	0.02214	67.9
CD	6	1000	-139.6	-0.00315	-3.15232	0.022586	-132.1
DG	6	1000	298.7	0.0129	12.90048	0.043186	306.2
GA	6	1000	-301.3	-0.01311	-13.1064	0.043502	-293.8
				sum	-1.85557	0.134141	
				delta flow	7.477255		
AG	6	1000	293.8	0.01251	12.51045	0.042581	295.5
GD	6	1000	-306.2	-0.0135	-13.5048	0.044105	-304.5
DE	4	1000	161.7	0.029832	29.83236	0.184478	163.4
EF	6	2000	-238.3	-0.00849	-16.977	0.071246	-236.6
FA	8	1000	-638.3	-0.01296	-12.9649	0.020312	-636.6
				sum	-1.10384	0.362721	
				delta flow	1.644983		

ITERATION 3							
Link	Diam	Length	Flow	h_L/L	h_L	h_L/Q	new flow
	in	ft	gpm	ft/ft	ft	ft/gpm	gpm
AB	8	1000	67.9	0.000205	0.204516	0.003012	68.9
BC	6	2000	67.9	0.00083	1.660562	0.024453	68.9
CD	6	1000	-132.1	-0.00285	-2.84673	0.021551	-131.1
DG	6	1000	304.5	0.013371	13.37079	0.043904	305.6
GA	6	1000	-295.5	-0.01264	-12.6405	0.042784	-294.4
				sum	-0.25134	0.135703	
				delta flow	1.001137		
AG	6	1000	294.4	0.012561	12.56127	0.04266	294.7
GD	6	1000	-305.6	-0.01345	-13.4523	0.044026	-305.3
DE	4	1000	163.4	0.030397	30.39676	0.186075	163.6
EF	6	2000	-236.6	-0.00838	-16.7606	0.070827	-236.4
FA	8	1000	-636.6	-0.0129	-12.903	0.020267	-636.4
				sum	-0.15788	0.363855	
				delta flow	0.234545		

d) Method Comparison

Whenever working with systems of nonlinear equations, the reliability of the solution technique is important. All of the methods described above require initial estimates of the unknowns to start the solution process. If these estimates are very different from the correct values, the techniques may not converge to the correct answer. Studies have shown that the simultaneous flow adjustment method and the linear method are the most likely to accurately converge. The other three techniques can exhibit convergence problems. The Hardy Cross method appears more likely to fail when the energy equations contain some links with very high headlosses and some links with very small headlosses.

281

D. Peaking factors

Peaking factors are used to create most-limiting demand conditions. They are developed from the diurnal demand curve, with maximum day demands used as the base demand. Typical peaking factors are

1) peak hour demand / maximum day demand: 1.3 - 2.0
2) minimum hour demand / maximum day demand : 0.2 - 0.6
3) maximum day demand / average day demand: 1.2 - 2.5

Generally, as the towns become smaller, peaking factors become more extreme - peak hour / max day is at higher end of range and min hour / max day is at smaller end of range.

E. Model initialization for limiting conditions

Generally used for steady state models. Each of the following limiting conditions is analyzed. Initializations are provided below.

Operational / demand condition	Service pumps	Booster pumps	Storage
maximum day demand or maximum pumping rate	Enter pump curves or set input equal to max day demand or max pumping rate	From storage: initialize as out of service. In-line: initialize as in service, enter pump curve	Initialize as nodes with no demand
maximum storage replenishment rate	Set input equal to max day demand or max pumping rate	From storage: initialize as out of service. In-line: initialize as in service, enter pump curve	Initialize as reservoirs with water service elevation at overflow elevation or with demands equal to max replenishment rate
max day demands plus fire flow demand	Set input equal to max day demand or max pumping rate	From storage: initialize as out of service. In-line: initialize as in service, enter pump curve	Outside area of influence: initialize as reservoir with water level where operational storage depleted. In area of influence, initialize as reservoirs equal to emergency storage level
peak hour demands	Set input equal to max day demand or max pumping rate	From storage: initialize input equal to storage output or as in service with pump curves. In-line: initialize as in service, enter pump curve	Initialize as nodes with inputs equal to storage outflow or initialize with water level at desired hydraulic elevation.

F. EPANET

Developed by USEPA as hydraulic model coupled with contaminant transport model. Flow model is dynamic, capable of tracking conditions under varying flows and demands. Model runs under both DOS and Windows, although the Windows model contains more graphics and can handle larger system. System size is limited by amount of RAM memory - there is no fixed limit. Model will simulate flows and pressures, several types of valves, including check and PRV, reservoirs, storage tanks, and pumps.

1. Installation

If the program is provided in a compressed format, you will need to expand it prior to installation. Typically, the program is provided in a ZIP format. You will need PKUNZIP or similar program to expand. Copy EPANET.ZIP t a temporary subdirectory and type

PKUNZIP EPANET.ZIP

(PKUNZIP is frequently renames to just UNZIP. Type the name of whichever program will decompress the file.)

Start Windows. From the File Manager, run SETUP.EXE. This will install EPANET to its own subdirectory and create an icon for its use.

Although not necessary, running Windows in enhanced mode allows for a larger system to be modeled and improves the model run times. Add the following line to your AUTOEXEC.BAT file

SET EPANET=32

Note that there are no spaces around the = sign. For advanced users, editing the SOLVER.PIF file to force SOLVER.EXE to run in full screen mode, rather than windowed mode, will also increase the speed of the program.

The text editor that is supplied with EPANET is DOS based. If you wish to change it to a Windows based editor or spreadsheet, add the following lines to the EPANET.INI file found in the Windows subdirectory:

[EDITOR]
Program=<progname>
Caption=<window title>

where the names in <> should be filled in appropriately. The editor or spreadsheet must be set to produce pure ASCII text files. Select an editor capable of working with files > 64K. This excludes NOTEPAD.

The full manual is provided on disk (usually in ZIP format) as several files in Windows WRITE format (which comes with Windows). Each file can be loaded into WRITE and printer.

2. Data Files

One input file is required to run EPANET. An additional map and verification files are not required but are recommended. The input file is an ASCII text file divided into sections labeled with [], e.g. [PIPES]. Comments can be added starting with a semicolon. Lines are limited to 80 characters in length.

The specifications within each section are given in the EPANET manual and the help file. Input is free form, the entries do not need to appear in specific columns of a line. The minimum sections required for a hydraulic model are [JUNCTIONS] [PIPES] and [TANKS]. Note that junctions (nodes and tanks) and pipes (pipe segments, pumps, and valves) must be defined before any other reference. The standard section listing in order for a steady state hydraulics analysis is:

[TITLE]
[JUNCTIONS]
[TANKS]
[PIPES]
[PUMPS]
[VALVES]
[REPORT]

If a dynamic analysis is used, then the following sections are added

[STATUS]
[CONTROLS]
[PATTERNS]
[TIMES]

If a water quality analysis is used, then the following sections are added:

[QUALITY]
[SOURCES]
[REACTIONS]

An [OPTIONS] section is usually placed at the end of the file.
Among other things, the [OPTIONS] section can be used to set the units used for the simulation. SI units are liters/sec for flow, meter for length and head, and mm for diameters.

Two optional files can also be used and are recommended. They are specified in the [OPTIONS] section. The first is a map file which lists each node and corresponding x,y location in a [COORDINATES] section. Optional text labels can be included in the [LABELS] section. The x,y measurements can be in any arbitrary scale. They are used for display purposes only, and do not affect the hydraulic calculations.

The second auxiliary file is a verification file. It lists each node with all the links that are attached to the node. Because numbering and transcribing the nodes and links is usually where most of the modeling errors are made, using a verification files will help identify data entry problems.

Very brief summaries of each section type are provided below. Full details are available from the EPANET manual or help file.

[TITLE]
Used to identify the model run. Up to 3 lines of text.

[JUNCTIONS]
Used to ID junction nodes and corresponding elevations and demands. Use negative demands for fixed inputs. An optional pattern id can also be specified for dynamic models.

[TANKS]
For reservoirs, an ID and elevation are entered. For tanks, an ID, the bottom elevation of the tank, the initial water level above the bottom of the tank, the lowest water level above the bottom of the

tank, the highest level above the bottom of the tank, and the tank diameter are entered. Tanks are assumed to be cylindrical by EPANET.

[PIPES]
The pipe ID, head and tail nodes, length, diameter, and roughness coefficient are entered. Minor loss coefficients can be listed here. Check valves are also specified here.

[PUMPS]
EPANET treats pumps as links in the model. A pump ID, head and tail node, and a description of the pump characteristic curve are entered.

[VALVES]
EPANET treats valves (other than check valves) as links in the model. A valve ID, the head and tail nodes, the diameter, the valve type (pressure reducing, pressure sustaining, pressure breaker, flow control, or throttle control), the setting for the valve, and a minor loss coefficient are entered.

[REPORT]
Describes the output report to be created. Specific nodes or links can be examined.

[STATUS]
Used to initialize the settings of links at the start of the simulation. Pumps can be open or closed. Relative pump speed can be given. Valve (PRV, PSV, FCV, TCF) settings can be open or closed. A pipe can be open or closed, which is used to simulate gate valves in the system.

[CONTROLS]
Allows pumps, valves, and pipe setting to change at given times or when specific pressures or tank water levels are reached.

[PATTERNS]
Specifies how water demands and sources vary with time. A pattern ID is provided along with a series of multipliers to be applied to the demands. The default time period is 1 hr, and this can be changed in the [TIMES] section. As many patterns as needed can be specified.

[TIMES]
Sets the time step parameters for the simulation, including the duration of the simulation and the hydraulic, pattern, and report timesteps.

[OPTIONS]
Sets values for network properties and simulation options including units, headloss formula, the verify and map file names.

Other sections which provide alternative entry formats include

[DEMANDS]
Alternative to the [JUNCTION] section for entering baseline demands.

[ROUGHNESS]
Provides an alternative to the [JUNCTION] section for altering roughness coefficients for groups of pipes.

285

3. Analyzing EPANET Results

As a Windows program, EPANET presents results in a number of different Windows. The Browser window allows for the simulation time, node, and link to be selected. Node information includes demand, elevation, hydraulic grade, pressure, and water quality. Link information includes diameter, flow, velocity, headloss/length, and average water quality. If a map is visible, the variable will be color coded on the map and the specific node or link will be highlighted.

The Report menu can generate spreadsheet-like tables for the current time of all nodes or links or a time series for the current node or link.

The graph menu can generate a time series plot of the current node or link.

G. Model Output Analysis

The model output can be used to test for system deficiencies. Deficiencies an a water distribution system are generally indicated by inadequate pressure. The model is useful in evaluating the causes and analyzing corrective actions.

Check that major trunk mains are able to meet the necessary storage replenishment rate. If any of the following conditions occur in a pipe segment, they are generally considered deficient and should be corrected:

1) velocities greater than 1.5 m/s (up to 3 m/s may be acceptable, but high headloss can result and the potential for water hammer is greater)

2) headlosses greater than 10 m / 1000 m

3) large diameter pipes (16 inch or greater) with headlosses greater than 3 m / 1000 m

The general solution to each of these deficiencies is to increase pipe diameters. These conditions should be treated as general guidelines, not as firm rules.

Pumps should be checked that they deliver adequate flows over full range of system demands., including average day demands. Conservative practice in multiple pump facilities is to provide maximum day flows with the largest pump out of service.

VI. Maps and Drawings

A. Comprehensive map (or wall map)

Map of entire distribution system used by system manager. Generally does not display all details. Typically includes:

street names
water mains
sizes of mains
fire hydrants
valves
reservoirs and tanks
pump stations
water source
scale
orientation arrow
date last corrected
pressure zone limits (may change)
closed valves at pressure zone limits

Typical scales ranging between 500 and 1000 ft to an inch.
Update once or twice a year or after major system extension.

B. Sectional maps or plat

Provides detailed picture of section of distribution system. Used for day-to-day operatio Several maps are required to cover the entire system. Typically includes

section designation or number	water account numbers
adjacent section number	measurements to service lines
street names	distances main to curb box
mains and sizes	distances to angle points
materials of mains	distances to fittings
date of main installation	dead ends and measurements
distance from property line	date last corrected
fire hydrants and numbers	orientation or north arrow
valves and numbers	scale
valve sheet designation shown in margin	closed valves at pressure zone limits
intersection number	service limits
block numbers	tanks and reservoirs
lot numbers	pump stations
house numbers	pressure zone limits

Typical scales are 50 to 100 ft to an inch.

Sectional maps should not overlap but should butt up against each other to avoid confusion. Each should be indexed, with the comprehensive map used as a base. Sectional maps must be updated more frequently than comprehensive maps, typically monthly or quarterly.

C. Valves and hydrant maps

Pinpoint valves and hydrants throughout the distribution system. Provide measurements from permanent reference points to each valve in system. Should include direction to open, number of turns to open, model, type, date installed. last date tested or repaired. May either be similar to a sectional map with a corresponding table, or an intersection map at a very large scale (20 to 30 ft to an inch)

D. Plan and profile drawings

Show pipe depth, pipe location (both horizontal and vertical displacement), and the correct distance from a starting reference point.

E. Supplemental maps

Some large systems keep an arterial map at a 2000-4000 ft to an inch scale of large mains (>= 8 inches) for use in system analysis. Pressure zone maps or leak frequency maps can also be useful

F. Card records

Most systems maintain card or database records for pipes, valves, hydrants.

VII. Design Standards (by Donald Lauria, University of North Carolina)

A. Introduction

Most developing countries have several different agencies engaged in the planning and design of community water and sanitation systems. It is common for each agency to have its own set of design standards. Frequently, the standards are based on norms of industrialized countries and thus result in systems that are very expensive. When this occurs, problems usually results.

If the beneficiaries of water and sanitation systems cannot afford them because they are too expensive, then there may be inadequate funds for operation, maintenance, repairs, and expansion. The systems may fall into disrepair, resulting in deterioration of service over time. Needed expansions may not take place. The inevitable result is excessive community dependence on government for subsidies and assistance, which frequently are unavailable.

To avoid this unfortunate condition, it is desirable that each community be responsible for paying the costs of its own system. This means tailoring the level of water and sanitation service to each community's ability to pay. This in turn may require a separate set of design standards for each system instead of a single set of identical standards for all systems. Almost without exception, standards based on less extravagant levels of service are needed to achieve the goal of financial self sufficiency than those currently in use.

It is usually difficult to develop an appropriate set of design standards for each community. Such standards need to be adopted on the basis of trial and error, with the planner/designer investigating successively lower standards until a satisfactory and affordable design emerges. This is a time consuming process that few planning agencies are willing to undertake.

B. Levels of Service

In selecting an appropriate level of service and corresponding set of design standards for water and sanitation systems, the main goal is financial self sufficiency for the community so that it will not be excessively dependent on others and can therefore control its own destiny. This means that the costs associated with paying for and running the system must not exceed the community's ability to pay.

A second important principle in selecting the level of service is that the community itself should be the major decision maker. Service and design standards that are imposed on a community without consulting its members are frequently doomed to failure. This means holding public meetings to inform the community of alternatives, their associated costs, and to determine the willingness of the community to pay them.

In selecting a level of water supply service, it is almost always necessary to provide a level higher than the one that already exists; furthermore, the level need not be very much higher than the existing one. For example, consider a community in which most houses have their own wells which have become polluted, necessitating the construction of a new system. If the selected service level for the new system consists of public taps, they may not be used because people may prefer the convenience of their wells, even though they are polluted. Public taps might also be

inappropriate for a community where vendors are delivering water to each house because they are less convenient than the existing service level. On the other hand, public taps probably are appropriate for places where people are presently having to walk long distances to fetch water. In such communities, individual house connections probably provide a level of service that is too high because they far exceed the users' expectations.

The level of service for sanitation must be consistent with that for water supply. Clearly, it would be inappropriate to provide a piped sewer system in a community where water supply is by public taps. Correspondingly, pit privies and latrines may be inappropriate for houses with individual connections and multiple taps.

Four of the major types of water supply service for piped systems in ascending order of service level are 1) public taps, 2) yard/patio connections, 3) single house taps (sanitary core), and multiple taps (conventional). Each type provides greater convenience than the previous level. The sanitation levels associated with these are 1) pit privies/latrines, 2) pour-flush latrines, 3) septic tanks or latrines with drainfields or soakaways, and 4) piped sewerage. A fifth level of water supply would provide fire protection.

With each level of service, the cost per capita increases by a factor between 1.5 and 2.0. For example, conservatively estimated, the cost per capita for public tap system is in the order of US$ 15; a yard tap system costs about US$ 30; a single-house tap system costs about US$ 45; and conventional water supply costs about US$ 75. Hence, a conventional system is about six times more expensive than a public tap system. Roughly the same applies to sanitation. Note that the major jump in convenience benefits results in providing water on the premises (yard tap) instead of at a public tap in the street. A sanitary core provides greater convenience than a yard tap, and multiple taps provide greater convenience than a sanitary core, but the marginal increases in these convenience benefits are not nearly as great as those associated with using yard taps instead of public taps.

In selecting the level of service, consideration needs to be given to upgrading over time. Initially, public taps might be provided which, in a period of, say, 5 years, can be upgraded to yard taps or connections.

In developing countries, it is unusual to provide the same level of service for an entire community. More commonly, part of a community may receive house connections while the rest is served with public taps. Sometimes, population or housing density is used as a guide for proposing the mix of connections and public taps. The standards proposed by COPECAS in Guatemala, which seem reasonable, are as follows:

Level	Community Population	Connections %	Connections Lcd*	Standposts %	Standposts Lcd	Latrines %
I	Dispersed	--	--	--	--	100
II	100-500	--	--	100	40	100
III	500-2,000	50	100	50	40	50
IV	2,000-10,000	60	150	40	50	40

289

V	10,000-50,000	70	200	30	50	30
VI	>50,000	85	225	15	50	15

* liters per capita per day

C. Design Periods

A design period is the future period for which a system is intended to have excess capacity. If a design period of, say, 10 years is selected for a water treatment plant, this means that the engineer wants the plant to be able to meet demands for 10 years beyond the time when it is constructed. Of course, the plant may be able to meet demands for longer (or shorter) than 10 years if the actual rate at which demand grows is different than the rate anticipated by the designer. Plant capacity depends, then, on two factors, the selected design period and the anticipated growth in demand. Normally, different design periods are used for the major components of water and sanitation systems.

In projecting or estimating future demands, it is common to assume linear or geometric rates of growth. A rate of, say, 2% per year is an example of geometric growth, and a rate of, say, 20 persons per year (or 20 persons per year per 1000 initial population) is an example of linear growth. A growth rate of 2% per year for water demand is higher than that found in most industrialized countries; it is not unusual for developing countries. Doubling time is roughly equal to 70 divided by the growth rate in percent. Hence, a community whose population is growing at 2% per year would be expected to double its population every 35 years; a 3% rate implies doubling every 23 years. A linear growth rate of, say, 20 persons per year per 1000 initial population is equivalent to 2 persons per year per 100 or about 2% per year. Hence, a growth of 40 persons per year per 1000 is about 4%, which is very high.

Probably the main reason for selecting a design period and providing excess capacity in facilities depends on the concept of economies of scale. Other reasons include the concept of useful life and rapidly increasing costs due to inflation. Economies of scale exist if average costs decrease as scale increases. Most consumer products and most components of water/sanitation systems have economies of scale. Consider a commodity that costs 100 for a quantity of 10; the average cost is 100/10 = 10. Assume this same commodity costs 160 for a quantity of 20; the average cost is 8. Hence, average cost decreased as scale increased. Therefore, economies of scale exist and it is probably economical to buy the giant economy size; that is, to buy more than one presently needs in order to capture the economies of scale.

In all cases where there is a set-up cost, economies of scale exist, and it is preferable to provide excess capacity. For example, moving equipment onto a construction site incurs a set-up cost before any work is done; similarly, traveling to a store to make a purchase incurs a cost before any purchase is made. In these cases, it is best to capture economies of scale by purchasing more than is immediately needed. It is seldom optimal to select a design period of zero; that is, to meet only present demands. This can usually be justified for only two reasons: (1) it will be a long time, if ever, before the excess quantity is ever used, or (2) sufficient funds are not available to enable purchasing ahead of demand.

290

The larger the portion of total cost represented by the set-up cost, in general, the longer should be the design period. Projects with large set-up costs usually have large economies of scale.

The economy of scale factor (b) measures the magnitude of economies of scale and hence can be used to select an optimal design period. This factor denotes the percentage increase in cost per one percent increase in scale or capacity. Consider the example in para. 3.3: cost increased by 60% (from 100 to 160), the scale increased by 100% (from 10 to 20). Hence, the economy of scale factor is 60/100 = 0.6. A small, economy of scale factor, say 0.3, implies only a 30% increase in cost if scale or capacity doubles. It follows that small economy of scale factors denote large economies of scale for which the design period should be relatively long. For b = 1.0, cost increases 100% for a 100% increase in scale. In this case, there are no economies of scale and the design period, if greater than zero, should be based on other considerations.

A value of b can be estimated for different water and sanitation components by fitting the cost model $C = aX^b$ to cost (C) and capacity (X) data for each component. Ordinary least squares can be used to estimate b by regressing log C against log X.

Treatment plants, pumping stations and water supply facilities often have a value of b of about 0.7; pipelines and networks usually have a value of b of about 0.5; and storage tanks have b of about 0.6. These values can differ substantially from one country to another or from one region to another within the same country.

A large technical literature exists on the use of b for determining the optimal design period x* (see for example Lauria et al., *Jour. of Environmental Engineering Division*, April 1977). Equations in this literature must be used with caution; they are only guides to judgement, and they do not cover all situations.

All the equations for determining optimal design periods that are in the literature cannot be repeated here. However, a few guidelines may be helpful. If a system has an initial deficit in capacity instead of demand and capacity being exactly in balance, s* should be larger than what is obtained by using the equation above. For example, the design period for a new system in a community with no existing facilities or with facilities that are meeting only a small fraction of the existing demand should probably be 50% larger than the value obtained from the above equation.

It is seldom possible to make an infinite number of expansions of the same facility, which makes it inappropriate to use equations like the one above. If a facility is not likely to be expanded any more than 2 or 3 times, then a special economical analysis would have to be made to determine the optimal design period.

After taking account of all the things that make use of the above equation for x* invalid (such as limitations on the number of expansions, initial deficits, budget constraints, and restriction on future opportunities to plan and construct facilities), it may be roughly correct to use a design period of between 5 and 10 years for components with equipment (treatment plants, pumping stations and tanks), and not more than 20 years for pipes and networks. In any event, ability to pay may be the determining factor of the amount of excess capacity the community can afford to include in its facilities.

291

D. Design Flows

Design flows are usually obtained by multiplying the expected population at the end of the design period by an assumed per capita flow. Normally, a peaking factor is used to convert the average design flow to a maximum daily or maximum hourly value, depending on the component to be designed. To the domestic flows must be added quantities for commercial, industrial and public use plus an allowance for unaccounted losses.

Average per capita design flows depend on several factors, level of service perhaps being most important. For public standposts, an average flow of between 25 and 50 lcd is usually assumed. While 25 lcd is an adequate quantity of water per person, this value could be unrealistically low for design purposes. For example, if each standpost were designed for, say, 100 persons with a peak hourly factor of, say, 1.5, then the peak hourly design flow per standpost would be only 2.6 l/min, which is too low. At this rate, it would take 6 minutes to fill a bucket. Furthermore, if the pressure at the tap were 5 m or more, a typical faucet would probably deliver at least 4 or 5 times this flow. Hence, the selected design flow for public taps should take account of the number of persons per tap. With 200 persons per tap, an average flow of 25 lcd is probably satisfactory, but with fewer than 200, a higher average flow is more realistic.

Typical average per capita design flows for yard taps, single house taps and multiple house taps are in the order of 50, 100 and 200 lcd, respectively. Hence, at each successively higher level of service, the average flow doubles. These flows are probably minimum values. Some standards recommend flows based on population density. The EMPAGUA standards for Guatemala City, for example, recommend an average value of 100 lcd for places with density of 600 persons per ha, increasing to 350 lcd for low densities of 100 persons/ha.

In small communities, commercial and other water demands are frequently ignored, which is probably acceptable. However, larger towns with commercial establishments need to take account of these flows. In all cases, a reasonable value for unaccounted losses in newly constructed systems is between 20 and 25%.

Some design standards recommend fire flows, even for small towns, which is unreasonable. It is not uncommon to find recommendations for 2 or even 3 fire flows simultaneously, and one set of standards in Peru recommends that fire protection should be provided at any point in the network, which is uncalled for.

To design for fire flows in places that do not have fire fighting equipment is unreasonable. It is a rate small town that has equipment for even one fire flow much less 2 or 3. Furthermore, to even consider fire flows unless the network is to be designed using a computer program is absurd. Since the location of the fire flow is uncertain, the flow must be moved to different locations in designing the network. This essentially requires use of a computer. Also, to provide fire protection at all locations would result in all pipes of the network being oversized to handle such flows. Few communities can afford such a luxury; rather, fire protection is usually restricted to high-value districts of the community. The COPECAS standards for Guatemala recommend no fire protection for places smaller than 20,000 persons; where protection is provided, the design flow is 5 lps. These values seem reasonable.

292

Peaking factors play a critical role in design since most hydraulic facilities must be sized to handle peak flows. Typical peaking factors for maximum daily flows are between 1.2 and 1.5 (max day/average), and peak hour factors are usually between 2.0 and 3.0 (max hour/average). Unfortunately, few studies have been conducted to actually measure peaking factors, in part due to the lack of metering equipment. It is important to recognize that peaking factors are higher in small communities than in larger ones.

In water systems, source works, transmission mains to conduct water to the community, and treatment plants are usually designed for maximum daily values because such demands may persist for extended periods of time. Networks and pumping stations are usually designed for peak hourly flows because these facilities must have sufficient capacity to meet instantaneous demands. Storage tank volumes are usually based on average flows. In wastewater systems, pipelines, networks and pumping stations are usually designed to handle peak hourly flows, and treatment plants are sized for average values.

E. Pipelines, Networks and Tanks

The sizes of pipelines that deliver flows by gravity depend on the available hydraulic gradient and the design flow. This applies to both open channel and pressure systems. The sizes of pipelines that delivery pumped flows usually depend on a design velocity which is assumed to be economical or optimal; a value of about 1.5 m/s is typical.

Some standards require the designed to make a cost analysis to determine optimal design velocity. In most cases, this is unnecessary. The optimal design velocity depends on the relative prices of power and pipeline construction. If power is relatively expensive compared to construction costs, it may be optimal to enlarge the pipe; that is, to design for a velocity lower than 1.5 m/s. Conversely, if power is relatively cheap compared to pipe construction, a velocity higher than 1.5 m/s may be optimal. In most countries, however, if power is expensive, so too is pipe, in which case a design velocity of about 1.5 m/s should be acceptable.

For network design, use of the computer is strongly recommended. Networks, whether for water or sewage, are very expensive, and the computer enables the designer to select sizes that minimize cost. Also, networks are complicated and hard to design; the computer ensures that they will function as intended.

In most networks, pipe length is the principal determinant of cost; it is usually more critical than diameter. This is because there are large economies of scale with respect to diameter but none with respect to length. For this reason, great care is needed in making network layouts so as to keep pipe length as short as possible.

Branched networks are usually less expensive than ones with loops. However, they are less reliable; a break in one pipe will interrupt service to all downstream users. Branched networks may be nearly as expensive as looped ones in linear communities where houses are stretched out along a main road. Branched networks are particularly appropriate for use with public tap systems; for communities with individual house connections or public taps that serve at most only a few houses, it is generally necessary to place pipes on all the streets where houses are located, resulting in a looped system.

293

Branched networks are much easier to design than ones with loops. Computer programs that use optimization techniques such as those distributed by the World Bank make branched network design relatively simple and ensure minimum cost. Looped networks must be designed by trial and error to seek a least cost solution, which essentially requires use of a computer program like those available from the World Bank.

If the level of service is to be upgraded over time from, say, public taps to house connections, it may be preferable to design the initial branched network for the taps with sufficient capacity so that it can serve as the primary network in the looped system when it is finally upgraded to house connections.

Most standards recommend minimum diameters for water networks; 100 mm for primary networks and 50 mm for secondary are typical values. While such guidelines can be useful, they should be flexible. A community in very hilly terrain, for example, might benefit by using smaller minimum sizes to avoid extremely high pressures at points of low elevation.

Minimum pressure standards for water networks are usually in the range of 5 m to 15 m. If a computer is used for design, its ability to accurately simulate the pressures in a network under different flow conditions enables selection of lower minimum pressures may be needed as an added factor of safety to account for inaccuracies in design. Seldom is it necessary or desirable to specify minimum pipeline velocities in a network.

Occasionally, design standards recommend the use of individual house tanks for storage rather than a central tank for the system on the assumption that this will enable the network to be designed for maximum daily instead of peak hourly flows. Unless each house tank is fitted with a flow restrictor on its inlet, the network may still need to be designed for peak hourly flows. In any event, individual tanks are usually more expensive, less reliable, and more risky to health than a central tank for the system.

In Latin America, it is common to provide a separate line from the source works to the storage tank and to operate the tank on a fill and draw basis. Such systems are relatively easy to operate and design since they have only a single source of water input to the network. However, they can be much more expensive than systems which use floating storage tanks where the network itself is used to transmit water from the source to the tank, thus eliminating a separate transmission line. However, the network must have sufficient capacity to fill the tank; this usually requires sizing at least some network pipes under minimum demand conditions (nighttime) while the rest of the pipes must be sized for peak demands. Also, during periods of peak demand, the network has two points of water input, one from the tank and the other from the source of supply. The increased difficulties in the design and operation of floating tank systems are usually more than offset by savings in cost.

Some standards recommend different storage tank volumes depending on whether floating or fill-and-draw systems are used. There is little rationale for such differences. The required volume of storage tanks cannot be precisely determined without accurate information on demand variations throughout the day; tanks are needed, after all, to meet peak hourly demands. The common standard of making tank volume equal to 25% of average daily design flow is reasonable; more than this in most cases would simply provide reserve in the event of pump failure at the source.

Recent developments in the design of small-bore sewers may make this an attractive alternative to conventional sewage. Small diameters are possible because sewage solids are removed in individual septic tanks at each house. The cost savings in smaller pipes must be weighed against providing individual septic tanks and, more importantly, in maintaining them so that sewers do not clog. The World Bank distributes computer programs to assist the design of both conventional and small-bore sewers.

295