PN-ACA-352

SLOVENSKE MAGNEZITOVE ZAVODY
SUMMARY REPORT

ENVIRONMENTAL ACTION PROGRAMME SUPPORT PROJECT
PROJECT NO. DHR-0039-C-00-5034-00

Presented to:
Lori Freer
Contracting Officer Technical Representative

Prepared by:
David Jackson
Dames and Moore

November 1995

A

EAPS Project • 2000 M Street Northwest, Suite 200 • Washington, DC 20036 • Tel. (202) 955-3300 • Fax (202) 955-5574
Funded by USAID • Implemented by Chemonics International Inc. • Dames & Moore • Environomics • Ernst & Young LLP • Harvard Institute for International Development • Industrial Economics, Inc. • Institute for Sustainable Communities • K&M Engineering and Consulting Corp.

November 20, 1995

SUMMARY REPORT
SLOVENSKE MAGNEZITOVE ZAVODY
NOVEMBER 1995 SITE VISIT

INTRODUCTION

The Slovenske Magnezitove Zavody (SMZ) mine and processing facility in Revucka, Slovakia was visited on November 2 and 3, 1995. SMZ is being considered for technical assistance under a U.S. Agency for International Development (USAID) Environmental Action Program Support (EAPS) project. The purpose of this visit was to gain an understanding of existing and proposed site facilities and identify engineering and environmental issues to be considered in an EAPS plan for assisting SMZ.

SMZ produces granulated and powdered magnesium oxide (MgO) by roasting magnesite ($MgCO_3$) ores mined on site. The MgO "sinter" is sold as a refractory material to companies primarily outside Slovakia. The following sections of this report describe the existing manufacturing operations at the site, process additions planned by SMZ, and environmental observations made during the site visit. Conclusions and recommendations pertaining to preparation of an EAPS plan for the site are also presented.

EXISTING OPERATIONS

Mining first began at the site in 1893. During the period of 1953 through 1958, a comprehensive geological survey of the mine identified extensive reserves of magnesite and dolomite [$CaMg(CO_3)_2$]. Based on the confirmed reserves, improved mining methods were implemented and new above-ground processing facilities were constructed. Roughly one million tonnes of ore and rock are mined annually using a cut and fill mining method. Most mining is conducted with rubber-tired vehicles, although a rail system is used to transport the ore out of the mine. At current production rates, SMZ estimates a 50-year proven reserve and additional identified but unmapped reserves.

The mine is dewatered by pumping at a rate of 30 to 50 liters/second (500 to 800 gallons/minute). This water provides approximately 70 percent of the water needs of the processing facilities above ground. Additional water is provided from an on-site stream-fed reservoir. An on-site, gas-fired power plant generates the electrical power used at the SMZ facilities.

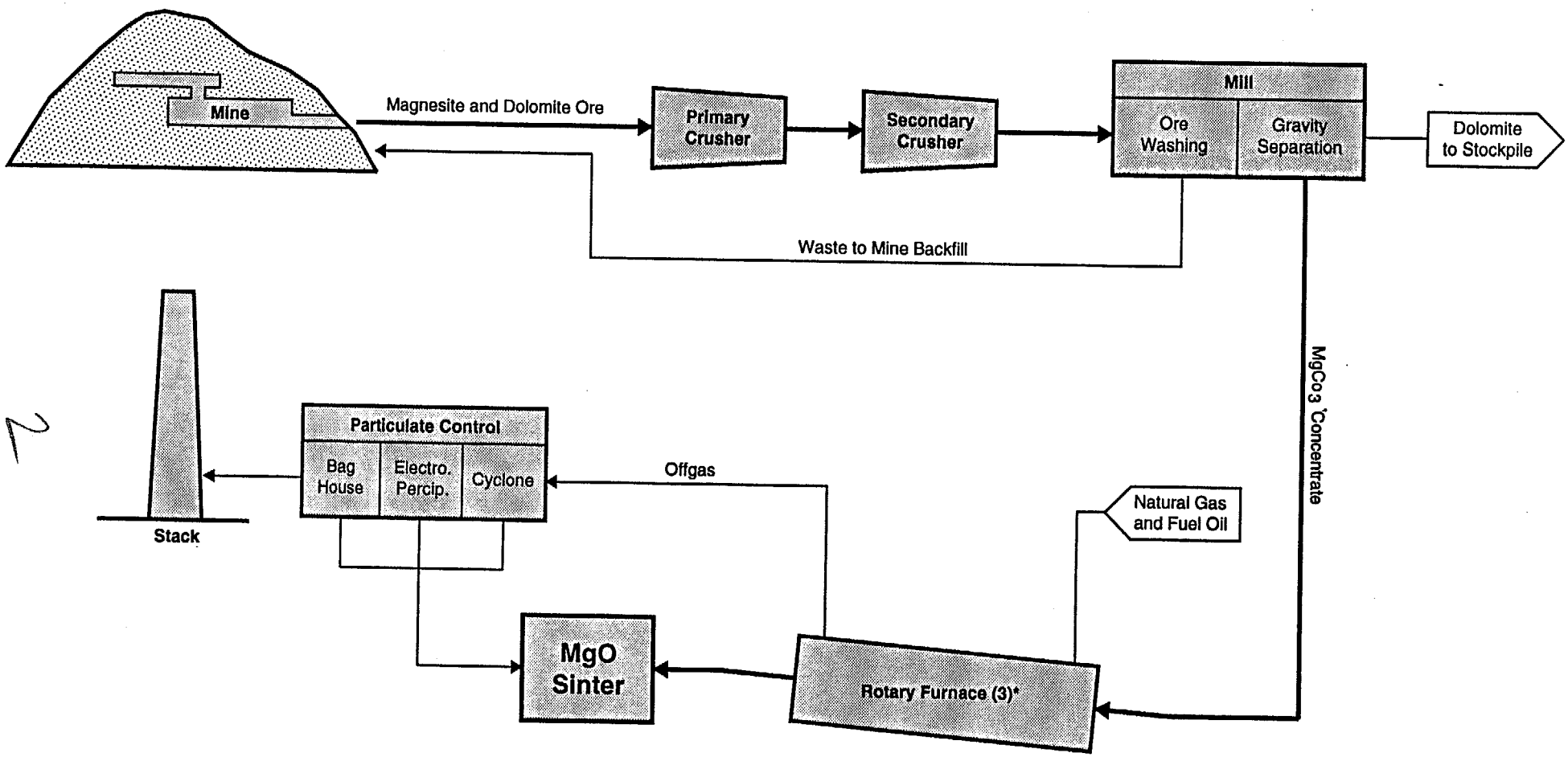

* 4 Shaft Furnaces Are Also Used

Figure 1

Generalized Process Flow Diagram
Existing SMZ Process

2

A generalized process flow diagram of the above-ground facilities is shown on Figure 1. The ore is dumped from the ore cars into the primary crusher where it is ground to minus 200 millimeters (mm). Following secondary crushing to minus 60 mm, the ore is conveyed to the mill for washing and separation. The waste rock separated from the ore during milling is returned to the mine for use as backfill. Magnesite is separated from the less dense dolomite by continuous gravity separation in the mill. The dolomite, which is not currently used as a feedstock at the facility, is stored on site in large piles. The magnesite concentrate is conveyed to the roasting facility for final processing.

The magnesite is roasted (or calcined) to magnesium oxide sinter in natural gas and fuel oil fired furnaces. Three horizontal rotary furnaces (two 70-meter and one 90-meter) and four older shaft furnaces are used. Oxidation of the magnesite occurs at reaction temperatures progressing from 400 to 1600 degrees Celsius (°C) during the six- to eight-hour residence time in the rotary furnaces. The shaft furnaces, which represent a minor amount of the processing capacity of the plant, were not included in the site tour by SMZ.

Off gas from the rotary furnaces is routed to a three-stage particulate control system consisting of cyclone separators, electrostatic precipitators, and bag filters. The SMZ representatives indicated that upgrade or replacement of the electrostatic precipitator system is currently being evaluated. A portion of the MgO fines recovered from the particulate control system is sold as product.

During 1994, 132,000 tonnes of MgO sinter were produced and sold by the facility. Most of the MgO sinter is sold for the manufacture of refractory brick and steel furnace liner materials. More than 70 percent of the sinter was exported during 1994. Western Europe and the Czech Republic accounted for the bulk of the foreign market, although the SMZ representatives described contracts from as distant as India and South Africa.

PLANNED NEW OPERATIONS

SMZ is planning to construct a new facility on site to produce magnesium metal. This would represent a new product line for SMZ which currently produces only magnesium oxide as a saleable product. SMZ is investigating the proprietary Italian Bolzano process for installation on site. In the Bolzano process, MgO, lime, and ferrosilicon are heated in an electric furnace to approximately 1100°C under reduced pressure. The magnesium is reduced, volatilized, and subsequently condensed in a water-cooled vessel. A silicate slag is also produced during the reaction.

SMZ has roughly a 350,000-tonne stockpile of magnesium oxide by-product that it intends to use as feed material to the Bolzano process. This material is currently unsuitable for sale as a refractory feedstock. A pilot batch of this by-product material was processed in an existing Bolzano furnace in Italy, and was reported by SMZ to produce magnesium of 99.96 percent purity.

Electrical energy and large quantities of ferrosilicon and lime are required for magnesium production, in addition to the MgO feedstock. Lesser quantities of refining salts are required to purify the magnesium. Electrical energy would be provided by the on-site power plant. Lime and ferrosilicon would likely come from domestic sources located approximately 20 kilometers (km) and 200 km from the facility, respectively.

In addition to magnesium oxide, calcined dolomite can be used as a feedstock to the Bolzano process. The massive quantities of dolomite stored on site represent an abundant potential feedstock. However, the dolomite must first be roasted in the rotary or shaft furnaces before it can be used. The effort and expense to calcine the dolomite would be at least partially offset by a reduced lime requirement for magnesium reduction when dolomite is used as a feedstock. Dolomite is also an excellent material for scrubbing sulfur dioxide (SO_2) from coal-fired power plants. This may represent an alternative market for dolomite.

ENVIRONMENTAL OBSERVATIONS

Due to the preliminary nature of the site visit, environmental issues were discussed only at a cursory level with SMZ personnel. Discussions focused primarily on air emission controls and wastewater treatment practices. The results of these discussions and observations made during the site visit are summarized below.

As mentioned previously, process emissions from the rotary furnaces are treated by cyclone separation, electrostatic precipitation, and filtration. It was unclear if the air emissions from the shaft furnaces were treated in the same manner. Based on observation of stack emissions from the rotary furnaces, the particulate controls appeared to function with some effectiveness.

Fugitive emissions may result in greater particulate releases. These releases include process emissions escaping capture in the air pollution control equipment and releases related to material handling and disposal practices. The process facilities contained dust accumulations on all static surfaces both inside and out. Observation of dust accumulations on the clothing and hair of shift workers in the rotary furnace area indicates that worker exposure to particulates may present a health issue. Some of the material apparently removed from the air emission control equipment was stored or disposed open to the environment and was susceptible to transport by wind or water.

Sanitary wastewater from the plant is currently treated biologically, while process wastewater is discharged to a nearby stream without treatment. In anticipation of more stringent discharge limits, a new treatment plant is under construction for treatment of process wastewater and further treatment of sanitary wastewater. Although a detailed description of the treatment process was not provided during the site visit, the system under construction appeared to be a chemical/physical precipitation process.

Due to the natural pH buffering capacity of the magnesium and calcium carbonate ores mined on site, the mine water and surface drainage from the dolomite stockpiles are probably of adequate

quality for discharge. Acidic drainage and dissolved metal pollution problems are unlikely at the site. However, releases of suspended solids to surface water may need to be considered.

Other than the observed storage practices for dolomite and some of the other by-products and air emission control residues, solid waste disposal practices were not observed or discussed. Potential asbestos-containing insulation materials were prevalent in and around the process facilities. Some recent environmental control measures were noted during the site visit. For example, secondary containment had recently been added around the fuel oil storage tanks for the rotary furnaces.

CONCLUSIONS AND RECOMMENDATIONS

From a resource utilization standpoint, SMZ's plan to expand its operation to include magnesium production appears to have merit. The plant would use resources produced at the current facilities that may otherwise go to waste. An existing unused stockpile of magnesium oxide could be fed directly to the Bolzano process. Dolomite, which is presently discarded onto massive waste piles on site, represents a virtually unlimited secondary feedstock to the magnesium plant. The new plant would increase the product diversity and, presumably, the long-term stability of the company.

Assuming that the initial financial analysis of the SMZ project is favorable, several engineering and environmental issues that should be considered as the EAPS project proceeds are as follows:

Process Waste Streams from the New Plant

- Review air emission estimates and control technologies, wastewater generation rates and treatment requirements, and solid waste generation and disposal practices anticipated for the new Bolzano plant.

- It may be advisable to visit an existing Bolzano plant in Italy to identify potential process or environmental issues that should be addressed prior to construction of a new facility.

- Review alternate processes or pollution control technologies as needed.

Environmental Upgrades to the Existing Facilities

- Evaluate SMZ's planned upgrades to the air emission control systems for adequacy and anticipated future reductions in air emissions. Emissions from the power plant and the shaft furnaces should be included in this evaluation.

- Review the design parameters for the new wastewater treatment plant, including

the influent flow rates and quality, treatment plant capacity, future discharge limits, and treatment process selection.

- Review SMZ's solid waste disposal practices.

- Operations review by a public health professional to identify potential worker or public health issues that should be addressed.

Useful Life of the Existing Facilities

- Evaluate the useful life of the existing facilities with respect to the anticipated life or payback period of the new plant, and with respect to the ability of the existing facilities to supply the power and feedstock demands of the existing product lines and the new plant.

- On-site review of the existing processing facilities by an experienced metallurgical engineer with support from other disciplines. This review should consider the possibility that dolomite may be used in the future as a feedstock to the Bolzano process and would require pretreatment in the existing furnaces.
- Examples of items that should be included in the engineering review are:

  - SMZ's mass balance estimates

  - Planned upgrades to the existing facilities

  - Equipment replacement costs

  - Structural integrity of the plant buildings

  - As necessary, identify new technologies which could potentially enhance the performance of or reduce emissions from the existing facilities.