PN-ABZ-900

Department of Geography and Environmental Engineering

The Johns Hopkins University

G.W.C. Whiting School of Engineering

Fax: (410) 516-8996

The Cooperation in Applied Science and Technology Program

Dr. Igor V. Videnskyy

Institute for Physical Chemistry, Russian Academy of Sciences

SCIENTIFIC REPORT

"Electro-Chemo-Mechanical Treatment of Hard Solids"

Advisor: Professor Eugene D. Shchukin

January 16, 1996 - January 15, 1997

313 Ames Hall, Baltimore, Maryland, 21218-2686, USA
(410) 516-7092

Introduction.

A number of effects are known concerning active surrounding media influence on mechanical properties of materials. As a rule only relatively "weak" or "moderate" effects of media find large-scale useful applications (lubricants in friction and wear, in metals treatment). "Strongly" active media are mainly objects of preventing their harmful influence. Nevertheless, it was shown that such strong effects as liquid metal embrittlement (LME) can be used for extremely hard alloys treatment; however, broad applications met technical difficulties.

Our principally new idea was to supply the new surface created during mechanical treatment with minimum amount of active component, namely, by means of reduction of its ions on a treated surface of a sample used as a cathode in electrochemical cell.

New method of Electro-Chemo-Mechanical Treatment (ECMT) was proposed for mechanical treatment of extremely hard solids (tempered steel, titanium alloys and intermetallides) using electrochemical reduction of ions of some active metals on treated surface, i.e. by means of LME effect, but with no liquid metal phase.

Preliminary studies have been provided at the Institute for Physical Chemistry of the Russian Academy of Science, Moscow, and The Johns Hopkins University, Baltimore [1]. Samples of tempered carbon steel (hardness 60-62 HRC) were ground not in the contact with an active metal melt, but in the electrochemical cell, in the presence of the active cations Zn 2+ and Cd2+ provided by the surrounding electrolyte. Grinding during the cathodic reduction of Zn2+ and Cd2+ ions occurred essentially more effective than grinding in corresponding electrolyte without applying current (and in air). The amount of removed metal was increased two times and more, at the current densities in the range of 50-200 ma/cm, i.e. orders of magnitude less comparing with conventional electrochemical treatment.

During one year work at The Johns Hopkins University we planed to carry out the scientific studies:

- to disclose of the physical/chemical mechanisms of the interaction between reduced active metal cations and newly formed metal surface, and finding out optimum conditions for using this effect;
-to develop the method for the nondestructive evaluation of the quality of surfaces obtained;
-to elaborate the recommendations for practical applications of Electro-Chemo-Mechanical

Treatment in hard materials grinding and drilling, with the essential, two times and more effects in facilitating the process, obtaining high quality of the treated surface.

Accomplished studies

1.Electro-Chemo Micro Scratching. Method and device.

A new Electro-Chemo Micro Scratching (ECMS) method has been elaborated for disclosing of the physical/chemical mechanisms of the interaction between reduced active metal cations and newly formed metal surface.

ECMS method is close to traditional indentation, major method in studying mechanical behavior of the near-to-surface layers. It has been thoroughly elaborated, both theoretically and experimentally, and supplied with a number of novel devices, down to nano-scale level [4-7], where it close in with the modern methods of atomic force microscopy and interfacial force microscopy [8-10].

Nevertheless, potentialities of indentation methods are restricted with a number of circumstances. : (1) predominantly compressive components of the stressed state in the contact zone, and (2) inaccessibility of the material surface - just in the zone of maximum stresses - for the medium atoms (molecules).

Such limitations are getting over, at least partially, in the case of tangential movement of an indenter along the sample surface, i.e., scratching. Particularly informative become tests with the small loads on the indenter, as in micro- and ultramicrosclerometry [11-13]. Under the smallest loads, this method allows to observe arising of the very first dislocations along the indenter path, i.e., elementary events of damage [14]. Dislocation density along the path increases with the load increase: this is a transition from the elastic behavior of material in the contact zone to the plastic one. Further increase in the load results in the appearance of the first microcracks and transition to the brittle response of material. Typical examples are shown in Fig.1. Corresponding statistical methods [15,16] allowed to characterize quantitatively such transitions, both for ionic crystals (NaCl, LiF), metal single crystals (Mo), covalent crystals (GaAs), and amorphous solids (quartz), - in dependence upon pH value, surfactant additives in aqueous solutions, and other medium conditions [17].

However, microscratching meets obvious difficulties in the case of the one of the most severe and important manifestations of the embrittlement of solid metals and alloys by the surface-active metal melts (LME). These are elevated (or high) temperatures, problems of the reliable wetting, of the used liquid metal removal - for the obtained surface damages observation, etc.

We proposed the principally new method in studying mechanisms and trends of the LME using a prospective combination of microscratching and electrochemical educing of the surface-active component in the area adjacent to the indenter/sample contact zone. Such combination can be broadly, universally applied in various studies.

The first experiments were done with the tempered carbon steel, in the course of hydrogen ions reduction from the 0.1 N NaOH solution [1]. Under conditions of cathodic polarization, with the current density of 5 mA/sq.cm, a significant embrittlement of material along the scratch was observed.

The scheme of the device is shown in Fig.2. A sample *1* is immersed in an electrochemical cell with electrolyte solution *2*. The sample is covered with varnish, excepts of the area used for scratching. Potential between sample *1* and electrode *3* (anode) is maintained by potentiostate *4*, under potentiostatic conditions. The current densities used: only dozens mA/sq.m - are very small comparing with those in the known electrochemical treatment of metals. The load applied to indenter *5* (with a standard diamond pyramid as a tip) in vertical direction *6* is of the range from parts of a gram up to a hundred grams (for scratching hard materials). For more precise microscratching, it will be reduced down to 0.01 g; for observation of the first dislocations nucleation in soft crystals, the small parts of a mg have to be used. Movement of the indenter in horizontal direction *7*, with a constant velocity (e.g., 10 mm/min) is controlled with synchronous electromotor *8* and reductor *9*. A special Luggin's microelectrode *10* can be placed closely to the indenter tip, for observing changes in the electrochemical parameters in the zone of surface damage [18].

Data about the LME effects observations have been published, by a number of research centers, including the authors' laboratories, for many couples solid/liquid metals [2,3,19-21]. Sometimes, information is poor, contradictive. In other cases, possible LME effect had been predicted, on the basis of thermochemical or quantum-mechanical estimations, but was not proved experimentally. The method proposed here opens interesting and prospective way for the original "modeling", at the

room temperature, of such couples under similar, comparable conditions of the presence of the mobile active component atoms, with the exact controlling this component amount, - and in the absence of its liquid phase (as mentioned above, not only required high temperatures, but screening surface damages). Significant advantage of the method is opportunity to remove oxide film from metal under cathode polarization, thus dealing with perfectly clean, juvenile surface.
Moreover this method can be used as a method of nondistructive evaluation of mechanical strength and damagebility of the metal surfaces affected by evironmental media.

2.Experimental and theoretical studies of the electrochemically reduced gallium influence on the contact deformation aluminum.

In literature, a very strong effect of the strength reduction and embrittlement is known for aluminum under the influence of liquid gallium [2,19-21]. With the device described, microscratching of aluminum (99.999%) has been done in the 10 wt % gallium sulfate aqueous solution, with the load on the indenter of 10 grams, and indenter velocity along the surface of 10 mm/min. Fig.3 presents SEM-images (x1000) of two grooves, on the same sample, in the absence of electric current (*a*), and with the current density through the sample surface of 6,8 mA/sq.cm (*b*). In the second case, a significant - about 20 % increase in the groove width is seen. However, there are no visible cracks were seen along the indenter trace. This result can be considered as a significant plasticizing effect [17], taking place preferentially in this case of the combination of the deep decrease in the surface energy, and an extremely high plasticity of the material used (99.999 % aluminum).
The predominance of the plasticizing effect explains the absence of the dramatic LME known for these couple. The value of this plasticizing action can be described, semi-quantitatively, in the microscopic - dislocation model, and in the macroscopic approach - in terms of the influence of the subsurface layer mechanical properties on the rolling process.
Dislocation model of the plasticizing effect caused by surface-active media was considered in [11,14]. It has been shown that mobility of subsurface dislocation segments is opposed by a force needed for the creation of the new cells of the surface in the course of the "cutting" the surface by dislocation ends. Decrease in the surface energy due to the active component adsorption facilitates

this process (decreases the surface potential barrier), thus lowering the yield stress in this subsurface layer.

The depth D of this plasticized subsurface layer is of the same order as the typical linear parameter of the dislocation network, i.e., a few lengths of a dislocation segment l_d. For dislocation density ρ_d (cm^{-2}), this gives $l_d = \rho_d^{-1/2}$. In our case of the very soft aluminum, ρ_d does not exceed 10^7 - 10^8 cm^{-2}. Correspondingly, the plasticized layer depth can be estimated as D~several $(10^{-7} - 10^{-8})^{-1/2}$ ~several μ.

The second part of the problem is: how significant (how deep) could be the influence of such changed subsurface layer on the common mechanical behavior of material? For evaluation of this depth, we can use some results of our calculations of the parameters of the rolling of a thin strip (foil), provided, in terms of the finite differences, both in the case of plasticized, and hardened surface layer [22,23].

The model used in these calculations is shown in Fig.4. Aluminum foil was considered, with the initial thickness $H_{en} = 60\ \mu$, with the bulk (inner layer) yield stress τ_{s1}, and the modified one, τ_{s2} in the subsurface (outer) layer with the thickness $D = (1/6)\ H_{en}$, in two versions: $\tau_{s2} = (1/2)\ \tau_{s1}$, and $\tau_{s2} = 2\ \tau_{s1}$. Friction coefficient between rolls and material was taken as $\mu = 0.18$; the ratio $H_{en} / H_{ex} = 3$, and $H_{en} / R = 0.3$.

Fig.5 presents the distribution of two characteristic parameters of the process along the horizontal (x_1) axis: the local normal pressure on the roll p_θ, and the main normal horisontal components σ_1 and σ_2, correspondingly, in the inner and outer layers, in dimensionless units - with respect to τ (n shows position of the so called neutral cross-section). The difference between two mentioned versions: hardened and plasticized surface layers - reaches 50 - 100 %.

The qualitative effect is also very significant. In the case of the surface hardening, high compression in the bulk causes the high residual tensile stresses in the surface area. In the opposite version, with the surface plasticizing, the stresses in the bulk are much less; this results in the significant lowering of the stresses in the surface area, and even change of their sign to compressive ones.

Some more complicated conditions were also considered in the studies mentioned: work hardening factor, and relaxation in surface layer (in dependence upon the rolling velocity) [22,23]. The principal conclusions remain similar, with some quantitative corrections.

We have applied these results to the observed plasticizing of aluminum in experiments with microscratching in the presence of gallium. Fig.6 shows schematically cross-sections of the groove: perpendicular to the direction of an indenter movement, and along it. The width of a groove d is of 40 - 50 μ, its depth h - of 12 - 15 μ. If the thickness of the plasticizing layer D is of several microns, this is an essential part of the deformed material, similar to the example with rolling. Thus, like in the case of rolling, this plasticized D-layer caused redistribution of strains and stresses in the adjacent material, down to the depth of $h \sim$ several D. In this case, an important factor is also decrease in the work hardening. Due to this all, the 50 % decrease in the material resistance in the contact zone predicted by calculations mentioned, can result in the approximately 20 % increase in the deformability ($[1.5]^{1/2} \sim 1.2$) observed experimentally. The predominance of the compressive residual stresses in the plasticized surface layer seems to be an important factor in explaining the absence of the (visible) cracks along the groove.

3. *ECMS studies and ECMT application in mechanical treatment of Titanium Aluminide.*

A novel, prospective intermetallide - titanium aluminide is an example of the extremely hard material. With ECMS device, microscratching of Ti-Al has been done in the 10 wt % mercury nitrate aqueous solution, with an indenter load of 20 grams. In Fig.7, SEM pictures are given of the two neighbor microscratches on the surface of the same sample, under conditions of cathode polarization, with current densities of 2,6 mA/sq.cm (*a*), and 4,7 mA/sq.cm (*b*). In the first case, separate damage areas are observed, spreading out of the groove edges. In the second case, more severe damages fill all the length of a groove, and are localized mainly inside it. Probably, the role of some definite, critical amount of an active component in the fracture zone is observed here.

On the base of this results, the real experiments of the grinding of titanium aluminide have been done for elaboration of recommendations for practical applications ECMT method in hard materials treatment. The some Ti-Al samples were ground using a special device, described in [24], in presence of the active cations Cd2+ provided by surrounding electrolyte. Grinding was carried out using a cylindrical wheel (25x50 mm) made of white corundum, grain size 50μm. The rotation rate

using a cylindrical wheel (25 50 mm) made of white corundum, grain size 50 m. The rotation rate of the wheel was 8 rpm. We used 10wt.% CdSO4 water solution for the reduction of Cd2+ ions. The samples were ground for a total of 2 hours. Every 10 minutes the decrease in mass was determined by weighting the sample. For comparison, similar experiments were carried out in air, water and in an electrolyte with no current.

The results of experiments are plotted as a dependence of the mass removed during grinding versus the experimental conditions and are shown in Fig. 8. The data show that grinding during Cd2+ ions reduction occurred essentially more effective than grinding in corresponding electrolyte without applying current (and in air and pure water). The amount of removed metal was increased approximately two times, at the current density i= 4.2 mA/cm2. This results can be characterized as a sharp, local decrease in the strength and the embrittlement of the near surface layer of Ti-Al samples. And in our ECMS studies we have observed the results of that processes on the microscopic level - more severe damages filled the entire length of a groove.

Therefore, ECMS method is not only new method of nondestructive evaluation. It can be used in elaboration of recommendations for practical applications of ECMT in mechanical treatment of hard materials.

Conclusion

The studies completed during this visit can improve the real linkage of the scientific principles of physical/chemical mechanics and modern technology of mechanical machining of extremely hard materials.

This results were presented as a poster at the 1996 ASME Mechanics and Materials Conference, June 12-14, 1996, The Johns Hopkins University, Baltimore, MD 21218 .

The manuscript "Microscratching in studying Environment-Sensitive Mechanical Behavior" was submitted to Materials Science and Engineering Journal.

Acknowledgments

We are very grateful to Dr. Robert E. Green, Director of Center for Nondestructive Evaluation, and Dr. J.Wagner, Chair of Dpt. Materials Science and Engineering, The Johns Hopkins University and all colleagues for help and fruitful discussion.

References:

1. I.V.Vidensky, I.V.Petrova, E.D.Shchukin, Colloid. J. **54** (1992), p.19.
2. V.I.Likhtman, E.D.Shchukin, and P.A.Rehbinder, Physicochemical Mechanics of Metals, AN SSSR, Moscow (1962), 304 pp. (in Russian); English translation - Jerusalem (1964).
3. P.A.Rehbinder and E.D.Shchukin, in Progress in Surface Science ,vol.3, No.2, Ed. by S.G.Davison, Pergamon Press, Oxford (1972), p.97.
4. Microhardness Technique in Materials Science and Engineering, Eds. by P.J. Blau and B.R.Lawn, American Soc. for Testing and Materials, Phil. (1986).
5. W.D.Nix, Metal. Trans.,v.20A (1989), p.2217.
6. G.M.Pharr and W.C.Oliver, MRC Bulletin **17** (1992), p.28.
7. T.W.Wu, Materials Chemistry and Physics **33** (1993), p.15.
8. DiNardo, N.John, Nanoscale characterization of surfaces and interfaces, Weinheim, N.Y. (1994).
9. J.E.Houston, T.A.Michalske, Nature **356**, March (1992), p.266.
10. R.C.Thomas, P.Tangyunyong, J.E.Houston, J. of Physical Chemistry **98** (1994), p.4493.
11. E.D.Shchukin, L.A.Kochanova, and V.I.Savenko, in Adv. in the Mechanics and Physics of Surfaces, Vol.1, Ed. by R.M.Latanision and R.L.Courtel, Harwood Acad. Publ., New York (1981), p.111.
12. E.D.Shchukin in Microscopic aspects of adhesion and lubrication, Ed. by J.M.Georges, Elsevier, Netherland (1982), p.389.
13. V.I.Savenko, L.A.Kochanova, E.D.Shchukin, Wear **56** (1979), p.279.
14. E.D.Shchukin, in Surface Effects in Crystal Plasticity, Eds. by R.M.Latanision and J.T.Fourie, Nordhoff, Leiden (1977), 944 pp.
15. E.D.Shchukin, V.I.Savenko, and L.A.Kochanova, in Physical Chemistry of Solid State. Applications to Metals and their Compounds, Ed. by P.Lacombe, Elsevier, Amsterdam(1984), p.47.
16. L.A.Kochanova, V.M.Kuchumova, V.I.Savenko, E.D.Shchukin, J. Materials Sci. **27** (1992), p. 5516.
17. E.D.Shchukin, L.A.Kochanova, and V.I.Savenko, in Modern Aspects of Electrochemistry,

No.24, Ed. by R.E.White, B.E.Conwey, and J.O'M.Bockris, Plenum Press, New York (1993), p.245.

18. E.D.Shchukin, I.V.Vidensky, and I.V.Petrova, J. Materials Sci. **30** (1995), p.3111.
19. W. Rostoker, J.M. McCaughey, H. Markus, Embrittlement by Liquid Metals, N.Y. (1960).
20. Embrittlement by liquid and solid metals: Proceedings of the Symposium sponsored by the Corrosion and Environmental Effects, The Ferrous Metallurgy, and the Mechanical Metallurgy Committees of the Metallurgical Society of AIME, Ed. by M.H.Kamdar, Warrendale, PA (1984), 589p.
21. Z.M.Polukarova, L.S.Bryukhanova, V.S.Yushchenko, E.D.Shchukin, Soviet Materials Sci. v.22 (1986), p.472.
22. S.I.Kovalev, V.I.Savenko, E.D.Shchukin, Mathematical simulation of the influence of an active lubricating medium on the stressed state of the material in rolling of t8. hin foil, *Sov. Materials Sc.* **19** (1984), pp.514-518.
23. S.I.Kovalev, V.I.Savenko, E.D.Shchukin, Influence of the surface layer rheology of adsorption-plasticized strip on the stressed and strained state of the material in rolling, *Sov. Materials Sc.* **21** (1986), pp.429-432.
24. I.V.Vidensky, I.V.Petrova, and E.D.Shchukin, J. Materials Research **8** (1993), p. 2224.

Figure captions:

Fig.1 Microphotographs of the LiF sample surface after sclerometric tests in heptane followed by selective etching, obtained with indenter loads $F_1 = 3.3 \cdot 10^{-2}$ N and $F_2 = 4.2 \cdot 10^{-1}$ N (*a*), and a schematized scratch zone structure (*b*).

Fig.2 The scheme of the experimental device: (1) sample (cathode), (2) electrolyte solution, (3)anode, (4) potentiostate, (5) indenter, (6) direction of the load, (7) direction of the indenter movement, (8) synchronous electromotor , (9) reductor, (10) Luggin's microelectrode.

Fig.3 SEM-images (x1000) of two microscratches on the aluminum sample, under conditions of cathode polarization, in the absence of electric current (*a*), and with the current density through the sample surface of 6.8 mA/cm^2 (*b*).

Fig.4. Scheme of the contact zone in the process of rolling: *1* - inner layer of the foil; *2* - outer (modified) layer.

Fig.5. The distribution of pressure on the rolls p_θ and also of the main (horizontal) stresses σ_1 and σ_2, correspondingly, in the inner and outer layers in the contact zone, in rolling of the adsorption-hardened (*a,b*) and adsorption-plasticized (*c,d*) materials; lines *b,c* correspond to solutions obtained for fast rolling, and *a,d* - for slow one.

Fig.6 Scheme of the contact zone in the process of microscratching of aluminum by diamond tip under conditions of surface plasticizing.

Fig.7 SEM-images (x1000) of two microscratches on the surface of the titanium aluminide sample, under conditions of cathode polarization with current densities of 2.6 mA/cm^2 (*a*), and 4.7 mA/cm^2 (*b*).

Fig. 8 The mass of titanium aluminide taken out by the grinding wheel over one experiment during 2h at different conditions.

Financial report

1. Dr. Vidensky's and his family travel expenses:	3,000.00
2. Dr. Vidensky's and his family living expenses (CAST):	12,000.00
3. Additional financial support of Dr.Vidensky's visit from the Sandia National Laboratories (Albuquerque, NM) Grant "Physico-Chemical Stability of Solid Surfaces":	10,000.00
4. Monthly living expenses of Dr.Vidensky and his family:	1,800.00

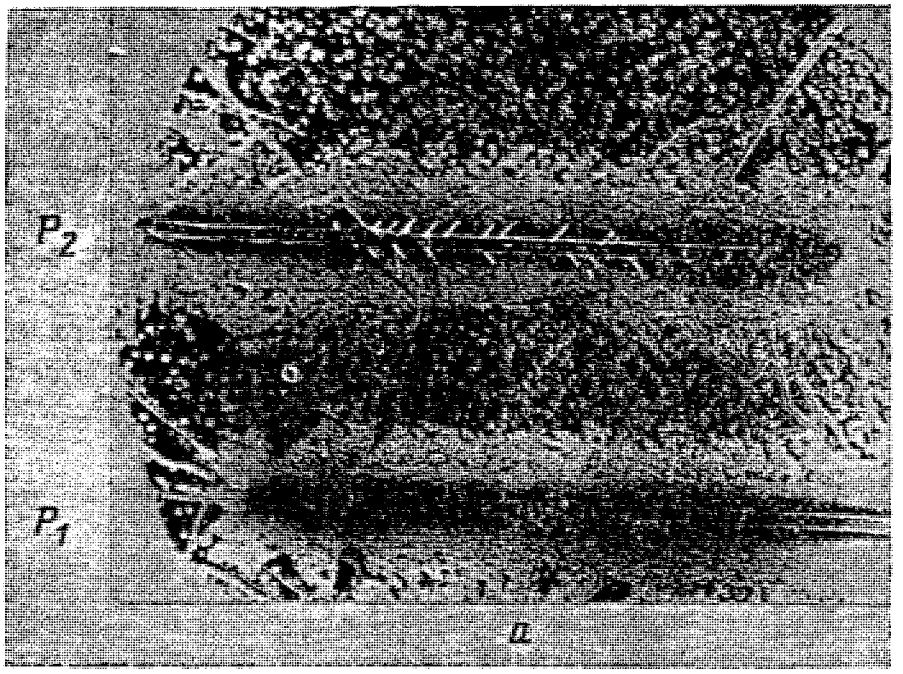

b

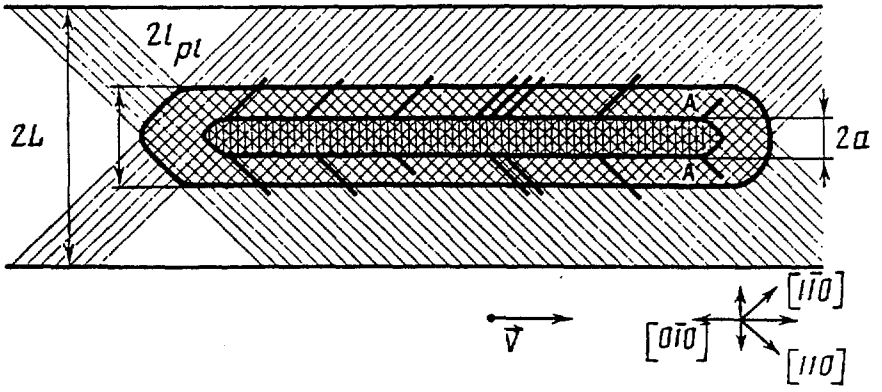

Fig. 1.

13

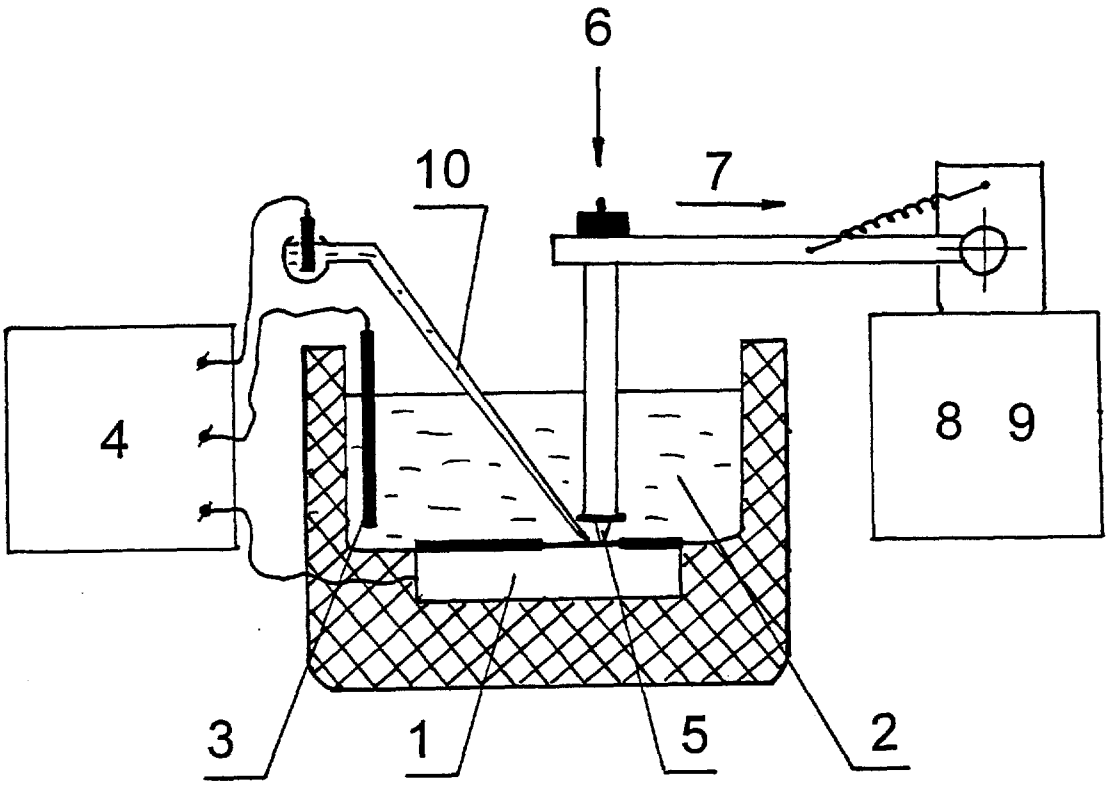

Fig. 2.

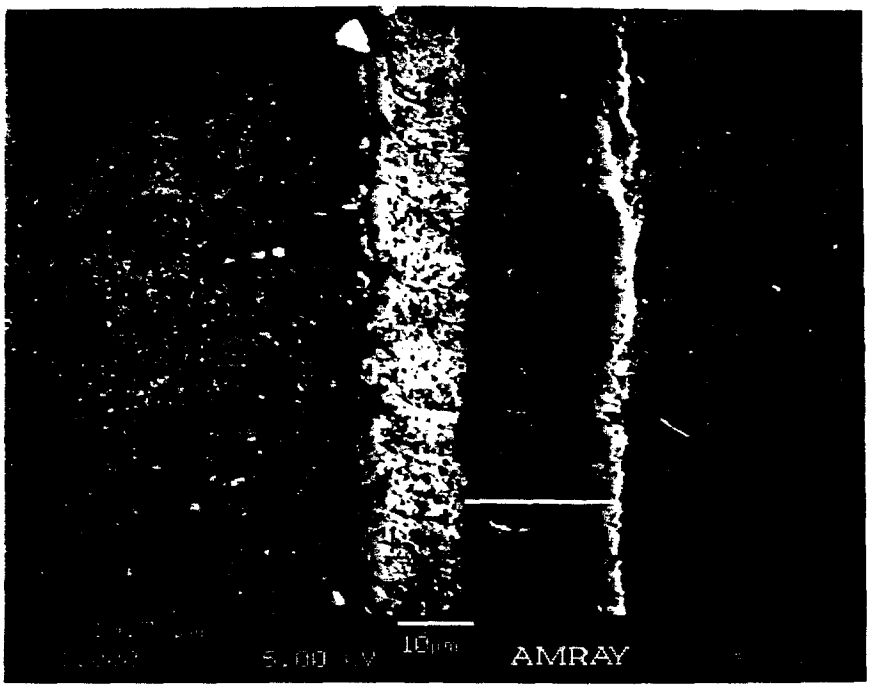

a)

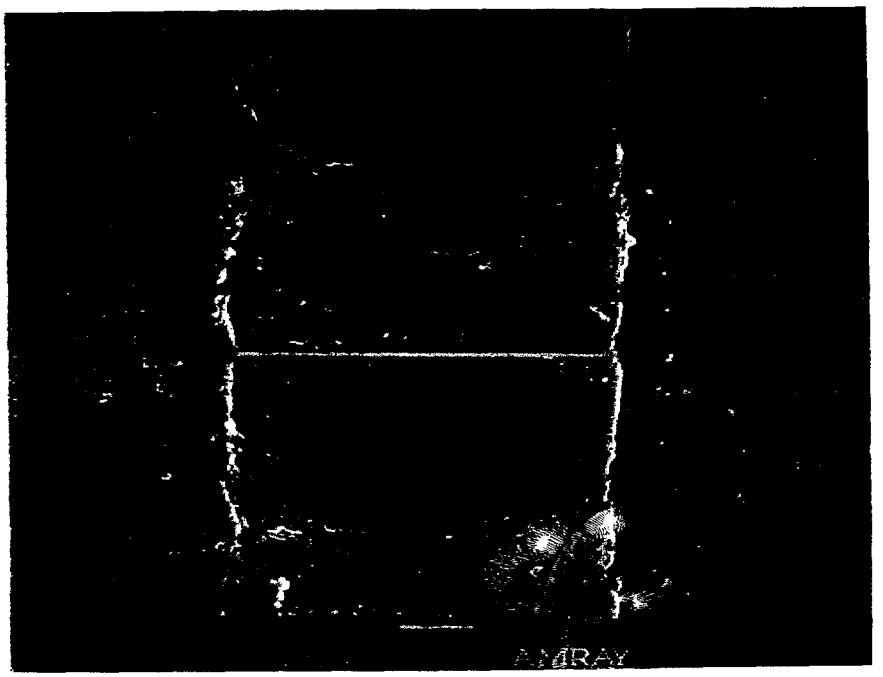

b)

Fig.3.

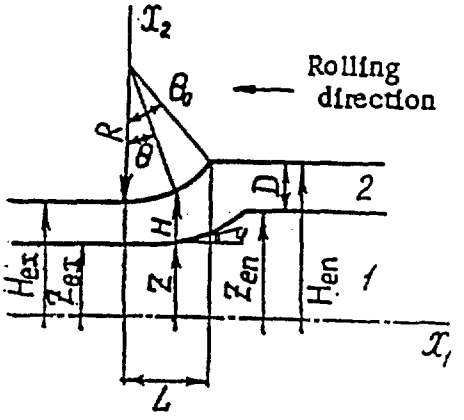

Fig. 4.

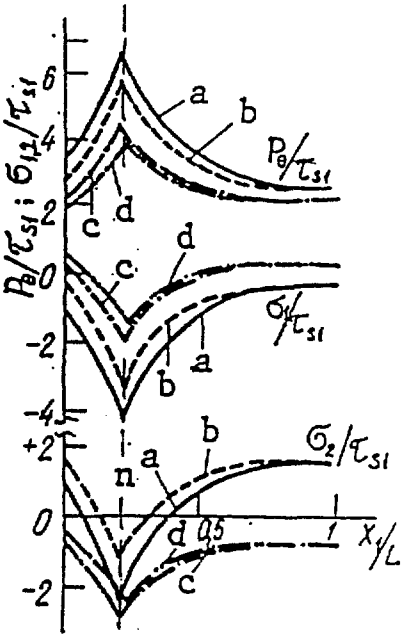

Fig. 5.

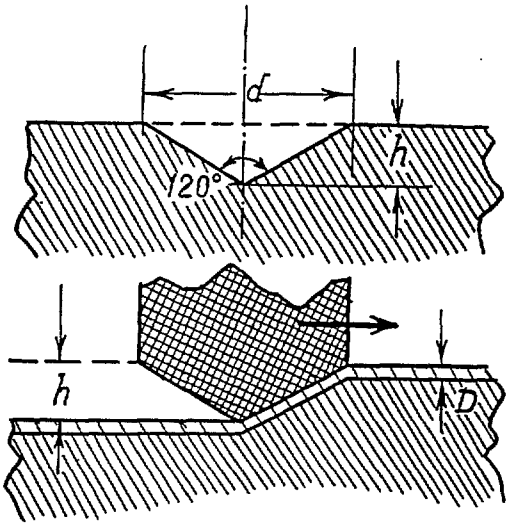

Fig. 6.

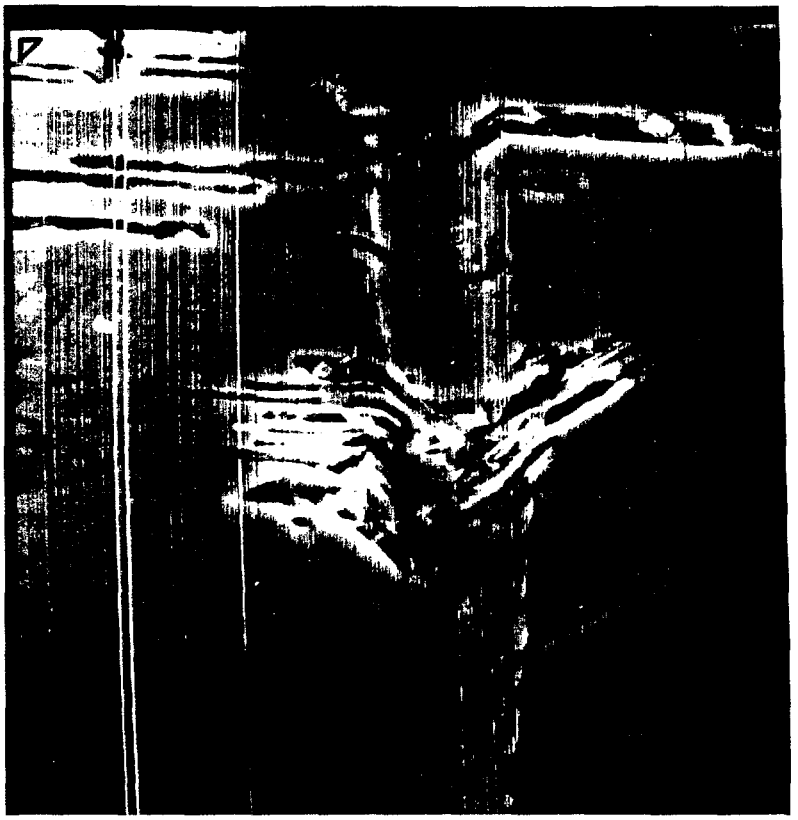

a)

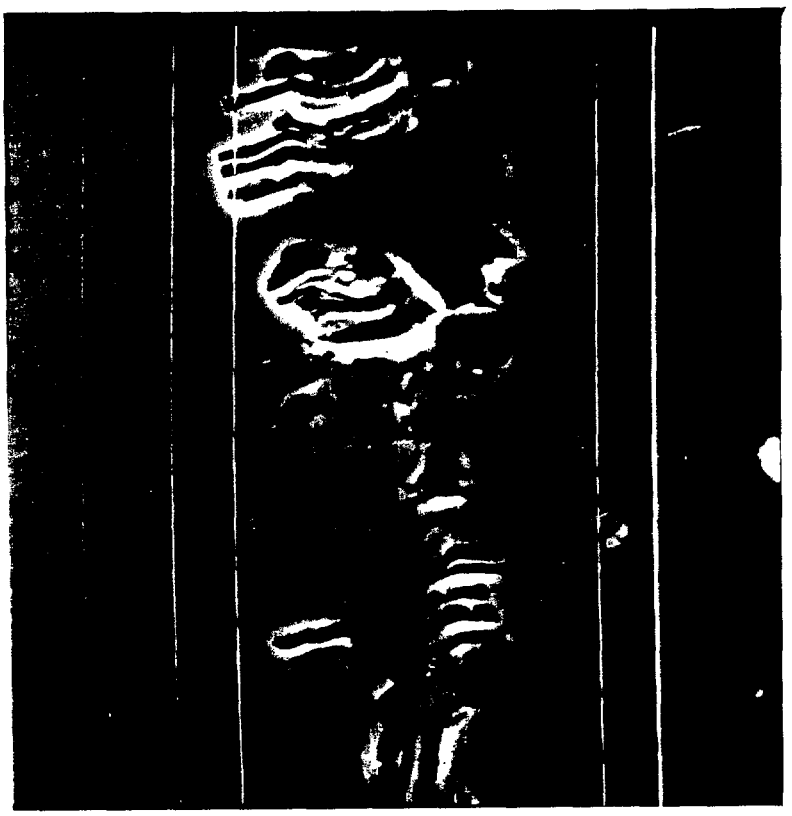

b)

Fig.7.

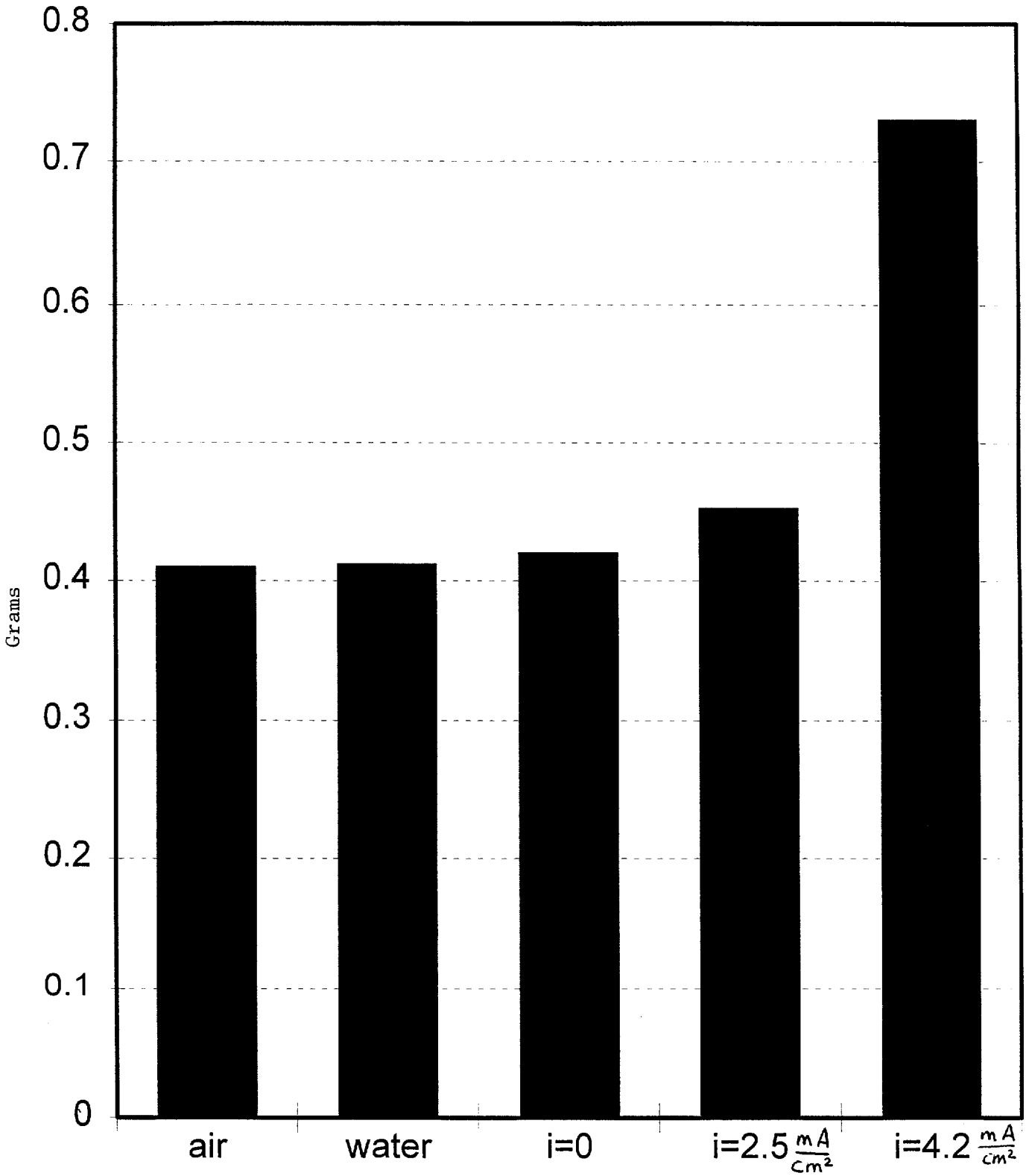

Fig. 8.