PN ABZ-091

91455

ENVIRONMENTAL ASSESSMENT
OF THE RECENTLY PRIVATIZED KELANI TYRE FACTORY NEAR COLOMBO, SRI LANKA

PHASE II

PLANT VISITS AND TECHNICAL DISCUSSIONS AT KELANI TYRE
SEPTEMBER 22-28, 1994

MEETINGS WITH THE CHAIRMAN OF THE KELANI AREA COUNCIL
IN KELANIYA
AND
WITH THE SENIOR MANAGER (FOR THE ENVIRONMENT) OF
THE BOARD OF INVESTMENT OF SRI LANKA
IN COLOMBO
SEPTEMBER 29, 1994

MEETINGS WITH USAID AND LOCAL WEC PERSONNEL
IN COLOMBO
SEPTEMBER 21 AND 26, 1994
AND
ON THE PREMISES OF KELANI TYRE
SEPTEMBER 27, 1994

BY: ANDREW P. FOLDI

PROJECT CS95SL6197 BY
THE WORLD ENVIRONMENT CENTER

SPONSORED BY
THE U.S. AGENCY FOR INTERNATIONAL DEVELOPMENT (USAID)
UNDER COOPERATIVE AGREEMENT NUMBER:

TABLE OF CONTENTS

I. EXECUTIVE SUMMARY 1

II. INTRODUCTION 2

III. OVERALL FINDINGS 3

IV. ENVIRONMENTAL CONSEQUENCES 4

V. DETAILS 4

VI. CONCLUSIONS AND RECOMMENDATIONS 17

VII. APPENDICES 20

- A. Figures and photographs 21
- B. Itinerary 25
- C. Persons and organizations visited 26
- D. Business cards 29
- E. Documents received 32
- F. Articles, Publications, Surveys carried by author 33
- G. Curriculum Vitae 34
- H. Attachments 38

ABBREVIATIONS
FREQUENTLY USED IN THIS REPORT

ABBREVIATION	DESCRIPTION
BOI	Board of Investment of Sri Lanka
EA	Environmental assessment
GOSL	Government of Sri Lanka
KT	Kelani Tyres Ltd
PPS	Mr. Palitha P. Subasinghe (of KT)
USAID	United States Agency for International Development
WEC	World Environment Center

NOTE: There are two *accepted* spellings for the country's name:
Sri Lanka and Shri Lanka (the latter reflecting how it is pronounced)

I. EXECUTIVE SUMMARY

• The visits at Kelani Tyre [KT] between September 22 and 28, 1994 had three distinct goals: (1) To perform an in-depth Environmental Assessment Audit of KT (Phase II — a continuation of Phase I which is summarized in "Terms of Reference for an Environmental Assessment of the Privatization of the Kelani Tyre Factory" and delineates the scope of work for Phase II); (2) To provide USAID with an *ex post facto* environmental assessment required for its "guarantee" program on local debenture issues; (3) To provide Kelani's top management with ecologically and economically sound alternatives to its current waste rubber disposal practices. In addition, the visit was aimed at observing current manufacturing, housekeeping and safety practices while providing recommendations for low-cost/no-cost improvements which would have beneficial impact both on productivity and on the environment.

The WEC/USA "team" consisted of a single person, the author, who was ably assisted by two local engineers contracted by WEC. USAID provided valuable background information and local contacts. Our upper-manager/guide/mentor at KT provided valuable information and insight on plant operations.

The "audit" at KT consisted of 5 days of interviews with selected high- and middle-level management in an office setting, followed by walk-through of 5 general areas: power plant, storage facilities, manufacturing facilities, analytical laboratory and tire testing facilities, and waste disposal (solid and liquid). Although top management was leery about the primary objective (i.e., "audit") of the assessment, they provided free access to all parts of the company and made available for the entire audit one of their upper-managers who was extremely well versed in all aspects of plant operations, having worked there since its inception (1963).

The problems of the current, privatized company can be traced back to its government-owned predecessor and are centered around three areas: technology, ecology, and labor relations. The technology has remained quite static since the mid 70's; most of the equipment is old and somewhat outdated, and there is too much reliance on operator involvement instead of automation and instrumentation. The product line is too broad for a factory of this size, necessitating too frequent production changes with the resultant wastes generated thereby.

When the factory was built (in the late 60's), ecology and environmental protection were unheard of concepts, and the socialist-leaning government's main concern was to provide jobs for untrained workers. Therefore, investments not strictly contributing to production were neglected. The incinerator works only as a burn-off for non-rubber wastes; rubber wastes (mostly tires) have been piling up around the buildings, in spite of efforts to sell them for a pittance. Very little liquid chemical waste is generated; however, the municipal (human) waste is discharged practically untreated through an erstwhile functioning treatment unit. Chemical vapors from the labs and vulcanizing areas are emitted into the atmosphere untreated. Carbon black dust is removed from the ventilation system by filtration. The spent filter bags and the collected carbon black are sold to small rubber manufacturers as a source of carbon black.

Although the privatization *per se* had no beneficial or adverse effects from an environmental standpoint, had this audit been carried out in its proper time, our recommendation to USAID would have been to withhold their guarantee for the bond issue until after, at least, a token environmental clean-up.

The new management after the privatization had numerous disputes with the workforce, stemming from substantial reduction in operating personnel, autocratic treatment of workers, and low wages.

- We also visited with the local Council to find out how KT and the nearby community interacted. The Council had very little money (it collects 6 c <US> per year per person in taxes!) and hardly any legal clout to have any effect on KT's environmental transgressions.

- The Board of Investment interview revealed that after decades of indifference the Government is moving toward establishing proper environmental norms. Those for liquid discharges have been published but enforcement has been weak, so far.

II. INTRODUCTION

The Ceylon Tyre Company (the forerunner of KT) was built between 1963 and 1967 based on Soviet technology with Soviet financial aid. A short lived (expired in 1984) technology- assistance program with Goodrich/USA somewhat updated the plant to a level equivalent to US production standards in the mid 1970's. The basic technology *and machinery* have changed very little since. Production started in 1967. Originally located on 52 acres 6 miles from Colombo and close to Colombo's airport., the plant site is now down to 39 acres and negotiations are underway to sell some of the "open" space to raise much needed capital.

KT enjoys a prominent position in Sri Lanka: its tires sell for 20% less than imported ones because of the high duty on the imports; it also dominates the local tire market with its 60% share. It produces practically every type of pneumatic tire, concentrating on light truck tires. The most important "competitive" threat comes from recycled tires. These are much cheaper, therefore individuals prefer them for passenger car use. Also, KT's capacity is insufficient to meet local demand for new tires, imports (33% of the new-tire demand) from Korea, Indonesia, Japan, and India are making inroads.

The current problems at KT fall into three categories; technology, environment, labor relations. Touchy community relations (there is an ancient Buddhist temple about 2 km away from the factory which the people felt was jeopardized by emissions from the plant) during the socialist- type government (1970-77) did not improve with privatization in 1992. Numerous strikes, some of moths' duration, erupted since -- some using the privatization process as the basis for its grievance. Even before privatization, the workforce was reduced from 2300 to 2000. After privatization, it was further reduced to 1500 but, according to L.P. Fernando, the plant could operate with 1300 people without affecting production.

Besides labor problems, KT is facing an acute shortage of space where waste rubber could be deposited. Without innovative approaches to recycle tires, rejected either because of production problems or because they have been returned from the dealers, KT will have to dispose, i.e.,pay for the removal, of these wastes. Discarded tires are generally an eye sore and a health hazard all across Sri Lanka. The Government started to focus on the growing environmental problems which are also threatening the lucrative tourist trade. This trend is going to force KT toward more environment-friendly technologies.

III. OVERALL FINDINGS

KT is a small-to-medium size (by US standards) tire company producing a vast variety of rubber products, solely for automotive use. The mainstay of their production is light truck tires. Because of inefficient distribution system, in which the retail dealers are the weak link, KT's production schedule is erratic, trying to fill short-term needs based on "rush" orders from dealers lacking storage place and foresight to anticipate market needs. Because of this, KT's production cycles for a particular product are short. This implies more frequent clean-ups, mold and die changes, all of which contribute to *inevitable* rubber wastes.

Some waste, mostly in powder form, is generated during shipment to and from the warehouses which is significant only because frequent rains wash these into the storm sewers which then empty into nearby waterways. The carbon dust around the Banbury mixers not only enters the airspace of the single, large production room (from which it is eventually removed by filters place in the ventilation ducts), but also the Banbury operators' lungs. This dust covering the floor and railings around the Banburys is a mere housekeeping problem.

Burnable wastes of relatively small quantity, such as broken crates, paper and plastic bags, rags, etc. are burned periodically in the "incinerator" which was originally designed to dispose of rubber wastes also. Rubber waste, especially rejected tires and unusable curing bags, has been accumulating at various sites on the factory premises. We have no numerical information but from the mounds of tires it is obvious that the accumulation is sizable. This, besides being unsightly, has three ramifications: (1) it uses up acreage which could be utilized for other purposes or sold (negotiations were underway to sell the land on one side of the factory to a container shipping company to raise much needed capital); (2) it is a general health hazard because the tires become habitat for rodents, snakes, and — especially — breeding ground for mosquitoes; (3) eventually, the tires will have to be removed at substantial expenditure to the plant. KT's management was, therefore, very eager to hear about methods to dispose of these rubber wastes in a manner which would be not only environmentally friendly but also economically attractive.

This author had a computer search done just before his departure from the US on this topic: there seem to be four practical ways to "reclaim" used tires (in addition to retreading which has been a time-honored method of recycling): (1) Ocean deployment (2) Heat generation (3) Thermal cracking (4) Pavement additive. These were discussed with top management during the oral report (see Details) and are elaborated in the Recommendations.

Liquid chemical waste is produced only in the chemical labs where small quantities are flushed down in the sinks (and join the municipal waste stream). Larger quantities are collected and sold to contractors for disposal: the eventual method of disposal is unknown, so it is likely that these chemicals are discharged in an environmentally unsound manner. Excess or outdated chemicals are sold as such to small jobbers. During the day shift some 700 people are on the premises; the liquid waste generated by them passes through a very small treating unit which may have been designed for much smaller load. At present, the facility is unused, unmanned, and acts plainly as a collecting, holding tank before its contents overflow into the fields outside the factory.

Contamination of the atmosphere comes from the power plant where (a) sulfur dioxide is generated from the sulfur contained in the fuel oil; (b) incomplete combustion generates soot and is emitted through the chimney. Other sources of aerial contamination are the chemical lab where hoods are vented in the atmosphere (a practice still all too often used in the US), the gasoline vapors from the tire building areas and the decomposition products from the curing presses.

Safety practices were inadequate from a US point of view, however they were in line with attitudes seen by author at some Pacific rim countries. There was a definite lack of worker's indoctrination and enforcement — as far as the usage of personal safety equipment was concerned — was non-existent. The feeling was that management already has enough friction points about production, and enforcement of stringent safety requirements would aggravate the situation.

IV. ENVIRONMENTAL CONSEQUENCES

All problems which negatively impact on the environment have been inherited from the previous owner and privatization itself did not change the environmental conditions. Obviously, the inefficient power plant, the non-functioning incinerator, the increasing waste piles of discarded rubber articles all are actual or potential polluters. Once the present administration (who are also majority owners) has resolved the labor disputes and streamlines the production, it is hoped that a sizable portion of the profits will be diverted to remedy these environmental problems. The most difficult task will be the proper disposal of the accumulated piles of tires. The other environmental problems need only capital investment to remedy: the appropriate technology or machinery is known and available.

V. DETAILS

To better understand the detailed discussions on various segments of the factory and their inter-relationship, the reader — who may not be familiar with rubber and tire technology — is given this short course in it:

Rubber and tire technology

A rubber article is manufactured by subjecting a complex mixture of chemical compounds to heat and compression for a length of time depending on the mass and shape of the product. In this process the soft mixture turns into hardened, cured (vulcanized) rubber. The temperatures applied can be quite high [the maximum temperature needed at KT is 201°C (394°F)]. The compression developed depends on the amount of mixture (called the uncured or green rubber) piled into a mold cavity and the equilibrium pressures obtained at the curing temperatures. When curing articles with an internal cavity, an inflatable bag (the curing bag) is inserted into the mold to help shape the article. Such bags are usually inflated by injecting steam or hot water into them. The pressure in the bag will depend on the temperature of water or the steam; thus the need for a power plant to generate the considerable amount of steam and hot water used in a tire factory.

The green rubber mixture is usually obtained by mixing the ingredients in internal (i.e., closed) mixers (as compared to open mill rolls). Many specialized mixers are known, the most commonly used ones are Banbury mixers equipped with a pair of kneading blades. These mixers cut down on the mixing time and can be controlled as far as temperature is concerned by either heating or cooling the outer jackets. They can mix several hundred kg batches in a matter of minutes.

The type and amount of ingredients of the green rubber will depend on the end-use requirements of the finished article. For instance, automobile tires require much more expensive components and more quality control than, say, bathtub mats. For simplicity's sake, only automotive end-use compositions will be mentioned in detail for the rest of this discussions.

Generally, the rubber compound is composed of one or more elastomers, a reinforcing (also expensive) filler (usually a specialized carbon black), a non-reinforcing (and cheap) filler, various processing aids (oils or waxes) to help with the dispersion of the fillers in the elastomer(s), and an activator (usually a zinc compound), an antioxidant (sometimes even a UV retardant) to provide protection against ambient influences, a crosslinking agent (most commonly sulfur is used), an accelerator (which hastens the natural tendency of sulfur many, many fold to form crosslinks between the elastomer's monomeric chains) and sometimes a co-accelerator (which modifies the behavior of the primary accelerator). [In case of colored articles — such as the white sidewall in a passenger tire, carbon black has to be substituted by other, less reinforcing colored materials]. Of all these materials, the elastomers are the least harmful to the environment; the accelerators and their decomposition products are the most harmful. Some of these decomposition products (nitroso compounds) have been proven to be carcinogenic.

A very general composition (expressed as parts by weight) used for automotive tires is as follows

Elastomer(s)	100	Inert fillers	0 - 80	Accelerator	0.5 - 2
Zinc oxide	3 - 5	Process oil	10 - 20	Co-accelerator	0.1 - 0.5
Carbon black	60 - 85	Stearic acid	1 - 3	Sulfur	1 - 5

optional additives: antioxidants, UV-absorbers

Because crosslinking (= curing) of the green rubber rapidly starts with elevated temperatures in the presence of sulfur and accelerator(s), it is a common practice to leave out either or both these ingredient from the preliminary mix. A lot of heat is generated while the reinforcing filler is dispersed in the elastomer(s) and the mixing cycle may require 5 to 8 minutes. The finished premix is dropped from the bottom of the Banbury on an open mill where — on rolls chilled with cold or even ice-cold water) it is given final mixing in a matter of minutes. The ~1 inch thick slabs are cooled to room temperature (while more and more new batches are mixed in the Banbury), then transferred back to the Banbury where the final mixing takes place in the presence of sulfur and/or accelerators. This is also a heat generating process and great care must be taken to avoid exceeding a preset temperature. Some operator work by time (this step usually takes less than 3 minutes), while others drop the load when the internal temperatures reaches the limit (say, 215 °F ~ 100°C). This finished mix is slabbed out similarly to the premix and allowed to cool. At this point, a small sample is taken to the analytical lab for quality control.

The green compound is released for further work if it passes a few critical tests: viscosity (Mooney) and hardness measurements, and curing characterization (ODR [oscillating disc rheometer] curve). [The rubber *in the development stage* has been subjected to a much more stringent set of tests]. The released rubber then takes one of two routes: it either goes to the extruder or to the calender.

The extruder is used to make contoured continuous articles with a fixed cross section which then are cut into appropriate segments to be used for the tread or sidewall of tires, or some other seemingly insignificant (yet important) parts of a tire, like the wedge used next to the bead. The extruder has a rotating helical screw which forces the contents of the cylindrical barrel (fed at one end through the hopper) through a die onto a moving belt. After being air or water cooled to near room temperature, this continuous extrudate is cut by a very sharp rotating blade into usable segments. At the end of each run (i.e., whenever the composition of the rubber or the shape the die is changed), considerable amount of green rubber is left in the barrel. At the beginning of the next run, the new compound has to flush out the old one before usable material can be collected. This flushing of the barrel generates uncured rubber waste.

The green rubber in the calendering operation is turned into a very thin (10 to 50 mils) sheet which can be used either for wrapping tire components, such as the wire bead, or to cover — on both sides — a sheet of unidirectional tire cord "fabric" in a sandwich fashion. This rubber &

tire cord combination when cut into an appropriate shape becomes the ply fabric, the reinforcing, load-bearing backbone of all pneumatic tires.

The extruded parts and the calendered plies, along with the rubber wrapped bead all come together at the tire building station where all these components are put together — with plenty of manual labor — to form the green (uncured) tire. The components of a tire are shown in the cut-up figure of a tire (Figure 1) in Appendix A. Basically, there are two types of tires: bias and radial carcass. There are significant differences as to how these tires are made, cured, and used — but these have no bearing on the environmental aspects under consideration at KT.

Vulcanization of the green tires takes place in curing presses. There are two kinds of presses: the older ones use a curing bag, a toroid shaped, fairly rigid bag shaped like the inside cavity of the finished tire. This heavy-walled, temperature resistant curing bag is placed inside the green tire and pressurized by hot water before the curing mold is closed. The newer ones, known by the trade name Bag-O-Matic, have a thin, very flexible sleeve attached to the ends of a collapsible column. When the curing mold is closing on the green tire placed inside it, the column retracts and the sleeve is inflated (by steam or hot water) into the same toroid shape as the curing bag of the older models.

The curing cycle itself is basically the same. The main difference is the steps taken after the mold is opened and the cured tire removed. With the old presses, the completely cured tire is removed from the mold (after the pressure has been released from the curing bag) and allowed to air cool for some time. Then, a specialized equipment forces — yanks! — the curing bag out of the tire through the much smaller hole provided by the bead. The curing bag takes quite a bit of beating in this process (the size of the pulling arm attests to the forces needed to extricate the bag!) and has to be discarded after a specified number of uses. A weakened curing bag could explode during the pre-pressurization creating not only housekeeping problems but could also very seriously injure a nearby operator.

With the Bag-O-Matic presses one has two choices: (1) either allow complete curing to take place in the press, then remove the finished tire by first deflating and collapsing the curing sleeve, (2) or remove — in a similar manner — the tire from the press when a substantial portion (say 60 t0 70%) of the cure has been completed, then move the still very hot and therefore continuously curing tire onto a simple pressure device which inflates the tire to above its normal operating pressure. This step is called post-cure inflation (or post inflation, for short). While the gently rotated (to avoid uneven cooling) tire is slowly cooling to room temperature, the remaining 30 to 40% of the cure takes place in a much cheaper equipment than the curing press. In this manner, the curing press is more efficiently utilized: its capacity is increased *de facto* by 30%.

A certain small percentage of the cured tires is culled from the lot at random and subjected to a series of wheel tests (simulating actual road and driving conditions) to ascertain that the rubber batch and the curing cycle are indeed up to specs and to certify that they meet government specifications (DOT in the USA).

The technological process chart of KT's tire and tube production is shown in Appendix H.

VISIT AND AUDIT AT KELANI TYRES

Energy generation and usage (information provided by K. A. DHARMADASA, Assistant Maintenance Manager, and PPS, both with the company since 1963)

Electricity: KT receives its electrical energy from the local grid in form of 36 KV power supply which is then transformed at plantsite. There are no separate meters to ascertain the electricity usage for individual areas. From the size of the motors, the major users of electricity are: Banbury mixers, various pumps (mainly for ventillation and fuel delivery) and rubber mills. There is increasing demand for electricity, exceeding the supply. The peak use (and cost!) of electricity is between 16:00 and 21:00 (4 to 9 P.M.). Electrical consumption fell from 13×10^6 KWh before privatization to 11 and 9 $\times 10^6$ KWh in 1992 and 1993, respectively. The change, however, can be attributed more to shut-downs during the strikes than to improved efficiency.

Power plant: The main function of the power plant is to generate hot water (180°C at 24 bar for the curing bags) and high-pressure steam (201°C for preheating the molds, and 154°C and 201°C saturated steam at 16 bar for vulcanization) for the curing presses and, occasionally, for pre-heating the extruder or Banbury jackets. There are three 28-year old, water-tube-type boilers heated by furnace oil containing 4.5% sulfur. There are no provisions to scrub the sulfur dioxide generated during the combustion from the stack gases. Corrosion problems, even on the zinc coated chain link fences, are obvious. The boilers are in continuous operation from 4 A.M. Monday to 7 A.M. Sunday, in 3 shifts with 4 operators/shift. The rest of the crew is made up of 3 supervisors and 1 manager. Maintenance (mainly cleaning of the cups [see below]) is done on Sundays.

The original burners were of the pressure steam-jet type where a centrally injected 1500 sec^{-1} viscosity oil (at 20 bar pressure) was "atomized" by 3.5 bar steam, conically injected around the oil stream. This otherwise workable technology was obsolete from the beginning because the controls were all manually operated. Visual inspection of the flame by the operator influenced the allocated air supply: too little air results in incomplete combustion with resultant loss of latent heat energy and with plenty of soot generation; too much air provides for a complete burn (with little or no smoke) but the excess air cools the flue gases, thus allowing less heat to be transferred to the water circulating in the tubes. With this type of burner, the start-up is difficult and it generates tremendous amounts of VERY dark black smoke. Once the boiler reached equilibrium, manual adjustment depends on the operator's observation of the smoke's color exiting the smokestack.

Currently, one of these burners is still in operation. Through a mirror system, the operator is supposed to observe the top of the stack and take corrective action by adjusting the controls inside the building. They seemed to be surprised and had no comment when I pointed out that this method cannot work in darkness (which last about 10 hrs/day year round, being so close to the equator).

Because of constant complaints by neighbors about soot covering their laundry, gardens, etc., two of the old burners were replaced with modern, fully automated models. Instead of the steam injection, the preheated (80°C) oil stream is atomized by having it impinge on a fast rotating (4000 rpm) perforated metallic "cup" (i.e., a shallow cone). The new burners have LP gas fed pilot lights (with photocell safety device in case of a flame-out) and secondary air feed. Yet, even with the automated system (oil pressure, air flow and flame temperature are monitored and adjusted), start-ups are difficult: there are no standard start-up procedures written up for the operators to follow.

The harmful effect on the ecology of the old burner is obvious. The reasoning given for why this one was kept was "In case the new technology does not work".

KT measures only CO_2 content in the flue gases, which should be about 16% by volume. Steam consumption is measured at a single point and thus describing the overall needs of the plant (this meter, however, has been broken for 8 months). Individual steam usage is not monitored, therefore, it is impossible to pinpoint steam losses (if any). 60% of the generated steam is used for making hot water.

The oil used for the burners (~1×10^6 gallons/year) is stored in two well-diked, horizontal steel tanks. It is unknown how much of the little oil spilled during transfer percolates into the high water table. The power plant gets its water supply from two sources. The Kelani River (one of Sri Lanka's biggest) is a reliable but impure source, 2.5 km from the plant. Primary treatment, mainly sedimentation and pH adjustment is done at the intake, and the clarified water is pumped over a pipeline to the plant. A much cleaner source of water comes from the numerous condensates (from steam traps and from blow down from the curing presses) and the recirculated water from heating jackets. PPS, on his own, printed flyers admonishing workers not to waste any of the precious steam or purified water. At times of drought, a supplementary pipe line connected to city water lines provides the additional process water.

The maintenance building is next to the power plant. Here we observed the first of many safety problems: workers walking barefoot or just in open-toed sandals on floors strewn with heavy, jagged metal pieces. Management just bought safety shoes for all production workers, one pair per person to be distributed free in October. [redacted] doubted that many would wear them, simply because it is alien to their culture (people in the lower economic sector wear thongs, maybe sandals, or go barefoot).

The incinerator (information provided by PPS]

This unit was originally designed by a locally renowned engineer to dispose of rubber waste, basically the 5 to 10 old curing bags discarded each day and built at a cost of 1,500,000 Rs. (~$30,000) in 1989. However, it functioned for that purpose for less than 6 months. Ever since, it has been used to burn paper, cardboard, plastic bags and broken wooden pallets. Yet, the concept of the design is sound: partially combust the organic matter in a down-draft burning process to produce carbon monoxide and ash, then burn the clean CO with additional air to produce harmless CO_2 and heat, Most of the latter was supposed to be reclaimed by water circulating in heat exchanger coils. Since only inert and invisible CO_2 was projected as off-gas, the exhaust stack is a relatively short (~25 ft tall) steel pipe.

In practice, the system does not work because the off-gases — exiting at the bottom of the refractory-lined, primary combustion chamber carry not only particles of ash but also unburned carbon particles which quickly plug up the narrow passages of the heat exchanger portion of the secondary combustion chamber.

The reasons for the soot production are: (1) lack of sufficient auxiliary heat source (such as a big starter flame) — the contents are supposed to self-combust once a small fire has been started with some kerosene at the bottom; and (2) lack of adequate air flow — in the beginning, one does not want to cool or even blow out the kerosene flame; later the passages are too clogged to allow adequate air flow.

Even as a burn-off disposal facility, as the "incinerator" is being used nowadays, the unit is awkward to stoke. The waste has to be carried manually some 6 m (about 20 ft) up narrow steps.

Presently, the unit is used on an intermittent basis, while the "trash" to be burned later is just dumped next to the unit. The removed ashes are collected in a nearby ash pit. Possible ground water contamination by leaching seemed to be of no concern .

Stores

The stores are located at the far end of the premises. Most of the chemicals were in powdery form, and one could see telltale signs of colored dust indicating the path taken when the bags were moved. The supplies came from all over the world; for instance, stearic acid from Malaysia, aluminum sulfate from India, zinc oxide from China and Japan, HAF carbon black from Korea and Thailand, Captax (accelerator) from Korea and Taiwan. Only kaolin and NaCl were produced locally. SBR (styrene-butadiene rubber) came from Italy and South Korea; natural rubber from Indonesia, Malaysia: RSS 1 and RSS 2 (the better grades) are used for making innertubes; RSS 4 and RSS 5 for tires [RSS stands for rubber smoked sheet, reflecting the process how liquid natural rubber latex is turned into rubbery sheet]. Nylon-6 and polyester fabrics (already "dipped" [i.e., coated] with adhesive and hot-stretched) are obtained from Korea and Thailand. Because of the long supply lines, they maintain a supply sufficient for 3-4 months' production.

Analytical lab and physical testing (information provided by Mrs. NALINI JINADASA-TINADASCI, Acting Research and Process Control Manager, with the company since 1963)

The purpose of the facilities, run by 25 people, is to analyze incoming raw materials and check the quality of green rubber used in production, and spot check the properties of cured rubber components removed from tires (see Wheel test lab, later) as an additional means of tire quality control.

The *chemical lab* was quite sparsely furnished but sufficient for the basic functions. "Expired" chemicals are resold. Laboratory chemical waste is collected by a contractor: final disposal unknown. Chemicals flushed down the sink are mixed with "municipal" (i.e., human) wastes. [See Waste section later] Fumes from the chemical hoods are vented through the roof into the atmosphere. How little importance management puts on "non-productive" facilities is exemplified by the transfer of the window air conditioning unit to offices after privatization. The immediate effect was that people stopped using face shields and goggles in the wet labs (an unacceptable breach of safety in the US) because of the discomfort caused by excessive perspiration.

All basic equipment to test green and cured rubber were present in the *rubber lab* — for tensile properties, heat buildup (Goodrich type), abrasion resistance (with carborundum wheel, similar to NBS), plasticity (Williams), adhesion (H-pull), curing (ODR) and dynamic flex (DiMattia) behavior — along with the necessary molds and laboratory curing presses [We noticed 4 steam leaks just on the curing presses]. This lab was also used to mold their own specialty seals needed in the production machines. Also the "cement" used in tire building was prepared here by dissolving green rubber in unleaded gasoline. Again, the fumes are vented into the atmosphere.

Testing of the tire cords (pulled from the fabrics bought overseas) was done in the *fabric lab*, the only air conditioned room [constant air conditions (relative humidity and temperature) are a MUST for reliable data] using both pendulum type and constant velocity (Instron) tensile machines. Other basic units, such as twist counters, etc. were also present.

Tire testing is done, in the opposite end of the building, in the *wheel test lab*. There were two standard test wheels (capable of testing 4 tires at the same time) running. Equipment needed to perform dissection of tires (needed to send components for testing to the rubber lab) was adequate. This large room was the only place where people seemed to care about safety: all employees wore shoes; those exposed to hazards, goggles. The personnel running the wheel test lab is under separate administrative jurisdiction from the rest of the testing personnel.

Production area (information provided by Mr. RATNAYAKE, Product Manager, and PPS]

The facility was designed for a maximum of 900 to 1000 "standard" tires a day: 850 per day is considered sustainable production, but during the September 21 to 23 period the actual production was only 586 standard tires. What constitutes a standard tire is not well defined: according to PPS, it is equivalent to a 33 kg (73 lb.) tire. According to the Smith New Court Far East Ltd. report (see Attachment No. 2) it is roughly equivalent to 2 light truck tires. The energy requirements for producing 1 standard tire are 18-20 liters of heating oil and ~60 KWH electricity. As far as material is concerned, the cord fabric is the most expensive component of the tire.

KT manufactures all kinds of tires (for automobiles, light trucks, standard trucks, motorcycles, scooters and the local 3-wheeler public transportation [called putu-putu]), as well as innertubes and mud flaps for trucks. The fact that there are 56 tread patterns in use indicates the number of tire variants possible. Most of the production is concentrated on truck tires (9.00x20, 8.50x20, 10.00x20 and 7.50x18), especially light truck tires; current management philosophy is focusing on reducing the number of products and retaining only the most profitable ones. On the average, they change compounds 4 times per shift! The elastomer used is either natural rubber (NR) or NR/SBR in 60/40 proportion (SBR means styrene-butadiene rubber).

There are 3 Banbury's dedicated to mixing the ingredients needed for the rubber. However, only 2 were running, 1 needs overhaul. There was one open roll mill available for reheating the rubber slabs for the final mix cycle. According the PPS, sulfur is NOT added in this cycle but mixed in on the open mill at the end. Banbury cycles are not controlled by internal temperature but by fixed mixing times. Slabs (analyzed before release) are fed either to the calenders to make the ply fabrics or to the extrusion lines. The rolls of the calender are kept cool with chilled water (max. temperature allowed: 18.5°C~65°F) to avoid any premature vulcanization while the rubber is friction calendered onto the already adhesive-treated cord fabric.

There are two extrusion lines: one for treads (and sidewalls if they are separate from the tread profile) and one for innertubes. Innertubes are most commonly used in non-passenger pneumatic tires. The rubber feed has to be preheated before adding it to the extruder's hopper. But there is only one mill available for preheating slabs. When extruding innertubes, extra filtration is needed to keep out sand and dirt which would make the tubes air permeable. The large number of products requires shorter runs and frequent die and mold changes. This is both time consuming (1 to 3 hrs are needed for replacement) and reduces personnel available for maintenance.

Tire building is done on machinery which requires plenty of manual labor both for servicing the machine (i.e., installing the respective tire components onto the feed mechanisms) and for assembling the green tire. In order to save time (i.e., increase the number of tires built per shift), the operators pull off more fabric than absolutely necessary and cut off and waste the material in excess of the ply overlap. This discarded ply fabric strip winds up in the outside waste pile.

The bank of curing presses consists of 28 "shear-strip" vulcanizers which use the curing bags for internal shaping and of 10 modern Bag-O-Matic presses with their integral bags. Each of these 10 presses is equipped with its own post-inflator. Curing bags are used 40 to 50 times because they get deformed due to the severe removal process, and wind up on to rubber trash pile outside. Due to the special composition and thickness of these bags, there is little possibility for their reuse.

Housekeeping

There was a wide range in housekeeping, from nearly impeccable in the administration and top management offices to the non-existent in the maintenance shop and the waste disposal facilities. The stores area where the raw materials were kept was fairly well organized but the production area was cluttered to the point that our inspection tour had to be detoured frequently because of obstacles.

Safety

The only safety item we observed were cotton gloves worn on the left hand of the rubber mill operators (to prevent burns from the hot rubber they had to handle) and sturdy shoes in the wheel test area. All operating personnel wore either thongs or went barefoot. We were told that starting October 1 workers will be issued "appropriate" safety shoes (along with color-coded work clothes to identify their work areas). For most of them this means just regular shoes. However, [redacted] having workers actually wear them is another matter. Regional customs and upbringing may defeat this safety advancement. No safety glasses or goggles were evident.

None of the mobile storage units necessary for tire building (racks for green carcasses and flats for extruded treads) were properly chocked. There was a scarcity of emergency shut-off switches around moving, rotating machinery. The guard around the curing bag removing machine was not large enough to shield all exposed gears, etc.

KT has its own fire brigade (considered "adequate" acording to Insurance Authorities) but has not had an emergency response drill in years. Emergency evacuation plans have not been worked out.

During our stay, there was a serious accident in the production area. A forklift, after delivering supplies to a Banbury located on the second floor, backed into an unguarded, elevator shaft and fell 2 floors. The operator escaped injury by jumping from the forklift just before it toppled into the shaft. The forklift was destroyed.

Waste

We identified the following wastes (including emissions) generated at KT. Listed by declining amounts of actual impurity (assumption, since few data were available) in each category:

Solid	tires, curing bags, filter cloth with carbon black, wasted ply fabric, off-spec green rubber, packaging material, floor sweepings
Liquid	oil, lab waste (chemical), untreated sewage, storm sewer
Gaseous	laboratory exhausts, fumes from tire building and vulcanization, power house exhaust (soot and acid rain)

PPS had a rough estimate for calendered fabric waste: 3,000,000 Rs. per month (~$60,000). Rubber-based wastes have been accumulating in the free area around the production building, but mounds of tires were also evident at other scattered locations on the premises; some of it is being recycled. Paper shipping bags containing some carbon black and filter bags loaded with accumulated carbon black dust are sold to local jobbers who use it as a source of cheap carbon black for inferior rubber products. Floor sweepings (there are 8 people assigned to this 24-hour task) are sent to municipal waste disposal sites. Liquid and gaseous wastes are discharged untreated and unfiltered, respectively.

"Recycling"

Both green and cured rubber waste are sold for doormat and similar applications for 10 to 20 Rs./- per kg (less than 18¢ per lb.). The off-standard tires (for whatever reason they have been rejected) are sold to out-of-country buyers at whatever price they can get for them. This is still cheaper than having to have to pay for removal and disposal. When we were there, a buyer from Pakistan was buying tires to be used in that country for trucks after making some "cosmetic" changes (such as patching up holes in the sidewall).

Some off-spec green rubber is reworked internally if the test lab discovers that, say, an ingredient was left out during compounding.

Waste minimization/Environmental issues

There are no incentives in place to reduce waste by the workers. Instead of rewards, they depend mostly on the reprimand system. There is no environmental awareness. Although most workers, including middle and upper management, live nearby, they don't seem too concerned about pollution (except for soot deposits). KT's medical center has no data to indicate any changes in the medical condition of the workers. The most common health problems are rheumatic fever, piles, and one called "catah".

Report to Top Management

Kelani top management requested that we review our findings with them at the end of our audit. To comply with their request, I made an hour+ oral presentation for the two Fernando's and the production manager in the afternoon of September 28. To assure that nothing of importance was left out, I drafted a speech the morning of the 28th. I deviated very little from this draft but elaborated on certain aspects of it. This draft is reproduced below in its entirety:

> Gentlemen, we have some good news and some bad news which will become quite obvious during our discussion. One thing I would like to emphasize: I am going to be honest and straightforward but not judgmental.
>
> Your primary concern is, obviously, the financial viability of this company. After privatization, the company cannot expect any more direct financial help from the Government, although it enjoys many privileges, especially in the tariffs imposed on imported tyres. Therefore, your main thrust is to improve production: streamline the variety of products, concentrate on a profitable tyre mix, engage – in this case with Avon – in tire design and development, and increase the efficiency of the workforce. Other considerations, which in the so-called developped countries have been forced upon industry by governmental regulatory agencies, such as protection

of the environment [EPA in the USA] and protection of the people whether in the outside community or in the workforce [OSHA in USA], have been given much less attention.

It seems that the GOSL is going to put more and more emphasis on the "protection" aspect while expecting sustainable expansion from the industries. This trend is justified not only to secure Sri Lanka's natural beauty and renewable resources for further generations but also to protect the lucrative tourist trade which, under proper governmental guidance, could evolve into a major source of much needed foreign currency.

My task here has become quite complex. My original assignment was to find means to minimize waste generated within your production process (the World Environment Center's primary objective) and, as an ancillary task, provide USAID with a *pro forma* – albeit belated – environmental audit as specified for the financial guarantee provided for your bond issue. I fully realize that this audit, regardless of its outcome, has no influence on the present financial situation. It may, however, become an issue should you seek any outside financial aid in the future.

You, gentlemen, added another aspect to my assignment. As I understand it, you are asking my help to provided practical uses for discarded tyres and other rubber articles, and to inform the appropriate governmental agencies about the severity of accumulating scrap rubber and about the potential avenues of either reclaiming the ingredients (including the potential heat content) or recycling these articles in their rubbery state.

I am going to provide you with a list of published articles and seminars dealing with tyre recycling and reclaiming. We – at present – should not try to decide on the merits of these various methods. In-depth knowledge of Sri Lanka's infrastructure, cultural background, and several economic considerations – information I do not have – is needed to properly evaluate the potential gains obtainable. I am confident that Sri Lankan technical and financial know-how will be able to come up with the right choice.

Because of this, while I am willing to speak with proper governmental authorities, my involvement would be limited to (a) describing to them the environmental concerns should they decide to stay with the *status quo* and the ever increasing piles of tyres, and (b) describing – and maybe explaining – the several known alternatives available to reduce this stockpile of rubber articles.

[Here I discussed in detail the four possible areas where discarded tires and rubber articles could be reused in an environment-fiendly manner: (1) artificial fishing reefs or shore protection barriers; (2) reclaiming the heat content of the tires through burning in a power plant; (3) reclaiming most of the valuable chemical components (hydrocarbons, carbon black) by thermal cracking; and (4) using the ground-up non-metallic components in asphalt pavement.]

Returning to the environmental audit for USAID. I am sure that you are aware that your so-called solid waste disposal methods are – in general – environmentally insufficient. Your "incinerator" needs serious technical upgrade to be classified as an incinerator. The practice of trying to find buyers for tyre rejects or worn-out tyres is economically commendable but it just transfers the environmental burden to another party. The same can be said about transferring production floor wastes (the

"sweepings") to a municipal dump site. Unless effective methods are found to minimize your waste generation – either through more stringent quality control or through more efficient use of materials and equipment, your solid waste pile will increase putting a burden on your dwindling land areas and, later, a financial lien on your factory due to the needed clean-up operation.

You officially generate very little liquid industrial waste. However, due to the physical characteristics and lax housekeeping, powdery chemicals (especially carbon black) residues can enter the storm sewer system and – ultimately – the neighboring stream and rice paddies. For all practical purposes, your municipal waste (human sewage) treatment plant is non-existent. In its present condition and usage, it is hardly more than a holding and settling tank prior to the release of its contents into the environment.

There are several channels through which Kelani pollutes the air. The most obvious one is inadequate burning of fuel oil in the "old" boiler. Less obvious ones are the numerous exhausts, none of them monitored, expelling solvents from the lab and the production area (mainly unleaded gasoline fumes and reaction products from the vulcanization process) into the atmosphere. The harmful effects of these emissions cannot be evaluated because of insufficient medical data from the near-by communities.

So far, we have not been able to pinpoint the fate of all the carbon black which is discarded along with the shipping bags, nor of the filters (and their entrapped contents) used to remove carbon black dust from the ventillation system. In the remaining two days, we will try to get to the bottom of this. [Note: These scrap materials are sold to producers of third-rate rubber articles who use them as a cheap source of substandard carbon black. However, while doing so, they contaminate with carbon black dust their entire neighborhood.]

As far as waste minimization (WEC's main objective) is concerned, we have identified three main areas where waste could be minimized with little or no capital investment: (1) More care must be taken when transporting solids to and from the warehouse [this also reduces some of the environmental hazards described above]. (2) Better training and more efficient usage of ply fabric in the tire building area would reduce actual fabric needs and reduce the solid waste build-up. (3) Scheduling of longer production runs with the same rubber compounds, tread profiles, and tyre sizes would reduce downtime needed for the cleanup of Banburys, extruders, for the start-up of fabric calendering, for mold changes in the curing presses and it would also reduce the chance for potential product cross-contamination (a serious concern expressed to us by the Avon "resident", Mr. Des Pegler). We are aware that longer production runs necessitate the increase of storage facilities, accompanied with some investment for storage space and for specialized storage equipment (mainly for the tread extrusions).

All in all, my impressions were that you are trying to do the best with a late 1960's, early 1970's factory, substituting ingenuity where better instrumentation or equipment – all considerable capital investment – would be more efficient. My hopes are that you are going to channel some of this ingenuity toward environmental protection. While at present being "green" may not mean much on the local market, in the future – and especially when Kelani becomes a major exporter for the Southeast Asian and Indian subcontinent markets – it most assuredly will.

I wish Kelani Tyres the best to achieve both economic prosperity and environmental responsibility. And I thank you, gentlemen, for your kind hospitality and for allowing us free access to your facilities.

Photographs taken during this meeting of the participants are enclosed in Appendix A.

VISIT AND INTERVIEW AT KELANIYA PRADESHEEYA SABHA

We visited Kelaniya Pradesheeya Sabha (rough translation: K. Area Council) on September 29 in the morning and interviewed Mr. Siri Dissanyake, its chairman (or president of the Council).

The council and its president are elected for a 4-year term. Their real task is to "maintain" the secondary roads, provide free refuse collection, and electric service to the community with the little taxes they collect. The *residents* pay an average of Rs. 3/- (~ 6¢) per capita per **year** for local taxes: with about 100,000 people within the Area's boundary, that amounts to about US$6,000). [For comparison, a bus ticket from Kelaniya to the airport, a distance of about 20 miles, costs Rs. 6/- one-way!] Industrial sites pay higher taxes: KT pays Rs. 35,000/- (~US$700) per year as corporate tax to the "Area" treasury.

Since KT falls within its jurisdiction, the Council had several mild disputes with KT. The Council has issued several letters of "admonition" to KT in the past, based on complaints from the local population. These included excessive soot deposits, as well as oil spills into nearby waterways. The Council has no other practical authority beyond these admonitions. The Council has no expert to inquire into these violations and it has to contact the central authorities in Colombo if action is needed. By the time the "expert" arrives, the violation has been rectified or suspended.

The Council never resorted to legal action on its own because (a) it does not have the fund needed for lawyers, (b) the accused factory has the means to employ well-known and well-connected lawyers [which *ab ovo* means that the defendant will be acquitted], (c) there are no clear-cut environmental laws, and (d) because of the excessive time-lag (see the BOI interview below for more details on this).

VISIT AND INTERVIEW AT BOARD OF INVESTMENT OF SRI LANKA

We visited the Board of Investment of Sri Lanka at the Old Fort in Colombo on September 29 in the afternoon and interviewed Mr. Tissa Fernando, Senior Manager - Environment. The BOI used to be located south of Kelaniya in one (the largest) of the 4 free trade zones of Sri Lanka, but recently moved to Colombo.

In the not too distant past, the Central Environmental Authority (CEA) delegated its environmental approval authority on a case-by-case basis to BOI. Although BOI is aware of some violations of the environmental "norms" (issued by BOI; original pamphlet enclosed in Appendix H), its only enforcement power lays in denying the yearly environmental operating license to a polluting factory. This "power," however, does not permit BOI to shut down the offending party. For instance, KT operated for 2 years without such license. The only real inducement to comply with environmental regulations in order to obtain this license is that without a valid operating license, it is difficult to obtain outside financial aids, e.g., loans from a bank.

The legal avenue, i.e., suing the offending party in court, is a wasted effort because the process may take several years, during which time ("process pending") the alleged polluter can conduct his business freely without hindrance. In those very infrequent cases where a judgment is handed down against a polluter, it is simply a cease and desist type order without any retroactive penalties.

The most positive aspect of our visit was that we learned that BOI has its own sample collecting and testing (once a month per factory) personnel and that it has a computerized database from which it constructs performance charts for each industry. Unfortunately, this activity is restricted to waste water discharges; there is no air quality monitoring.

VI. Conclusion and Recommendations

• KT inherited a rather antiquated tire factory which is nevertheless capable of producing a large assortment of tires of various types and sizes, in addition to the internally utilized curing bags. Because of the large variety and the uneven production schedules, the capacity is expressed in "standard" tires which is defined as weighing 33 kg (73 lbs). Instead of the name plate capacity (900 standard tires per day = 65,000 lbs of tire per day), the factory has been running around 70% for some time. For the current fiscal year the actual production of 408,000 tires (40% of it light truck tires) was equivalent to 216,000 standard tires.

From the environmental standpoint, deficiencies were noted in the following areas:

1. Incomplete combustion in the power plant attributed mainly to the outdated burner which generates soot manifesting itself in heavy dark smoke emerging from the chimney
2. Use of furnace oil containing sulfur compounds without removing the sulfur dioxide produced from the flue gases by scrubbing or chemical methods
3. Improperly designed incinerator which cannot handle waste rubber
4. Poor housekeeping and handling of powdered chemical ingredients
5. Lack of control of the eventual use or disposal of "wastes" sold to jobber or contractors.

From the occupational safety and health standpoint, improvements are needed in these areas:

1. Enforcement of the use of personal safety equipment already issued or available
2. Better housekeeping to reduce clutter, tripping hazards, etc.
3. More or better marked emergency shut-off devices
4. Emergency fire and disaster drills
5. Development of disaster evacuation plans for the factory and for the nearby community.

• The following recommendations may alleviate some of the above problems, as well as reduce waste and improve production:

In the power plant

1. Replace the old burner with a new, automatically controlled burner. Prepare standard operating procedure for the start-up. Ascertain that personnel assigned to the power plant understands the ecological ramifications. Analyze the flue gases not only for CO_2 but also for SO_2. Install a scrubber after at least one of the boilers to ascertain that scrubbing is technically feasible. Consider the disposal problem of the highly acidic aqueous waste (Could it be sold to some metal working plant for descaling, etc.?).
2. Repair the broken steam meter. Consider installing separate meter in the steam trunk lines to be able to monitor individual steam consumption.
3. Insist on workers wearing safety shoes in the maintenance shop, and gloves when handling sharp metals.

At the incinerator

1. Increase the height of the chimney pipe but consider the height of the nearby power lines.
2. Consider adding a vortex type ash separator before the flue gases enter the heat exchanger portion, to try to make the incinerator do its intended purpose (dispose of waste without soot and generate preheated water for the power plant).
3. Construct a concrete corral where the waste to be burned can be stored in an orderly manner.
4. Collect the ashes in a pit lined with non-permeable, heat resistant lining (clay is the cheapest).

In and around the stores

1. Have the spilled powders cleaned up immediately, especially when outdoors.

In the analytical lab, etc.

1. Reinstall window air conditioning unit and then
2. Insist on the use of personal safety devices, especially goggles and rubber gloves.
3. Try other, safer solvents than gasoline which is flammable and carcinogenic to make up the rubber cement needed in tire building.

In the production area

1. Schedule longer production runs to cut down on downtime needed for changing dies, molds, etc. and to reduce the waste rubber generated during clean-up.
2. Try to be more frugal when tearing off the ply fabric needed for the tires. The excess winds up in the waste pile.
3. When curing presses need to be replaced, opt for those NOT requiring curing bags.
4. Provide ear plugs for operators working around the curing presses and subjected to the loud steam noises during blow down.
5. Increase the force ventilation around the curing presses to suck off the fumes emitted and thus reduce worker exposure to harmful nitroso compounds.
6. Investigate the possibility of using cured waste or off-spec green rubber as a partial rework in less demanding tire applications.

Waste disposal

1. When selling waste to jobbers, or disposing waste through contractors, ascertain that the waste will be used/disposed in an environmentally sound manner.
2. Investigate the possibilities of using one or all of the following methods to reuse, recycle used tires:

   (i) Use the tires, bundled together with cables and weighted down with, say, concrete blocks as a fishing reef or as an underwater shore protection barrier along the ocean front. The advantage is that very little new technology is needed, practically no specialized machinery is involved. The life expectancy depends on the life expectancy of the bundling material. If the tires get loose, little damage is done to the environment.

   (ii) Reclaim the latent heat content of the tires by burning them for steam (electricity) generation. Beside the steel rims, everything else in a tire is burnable. The negative aspects are: (a) some harmful gases — nitrogen oxides and sulfur dioxide — are formed which must be scrubbed from the flue gases; (b) to avoid soot formation, the temperature must be very high, necessitating the use of high-quality refractory tile lining. It is recommended that one uses a long, rotating kiln such as the ones used in cement making. Indeed, that kind of idea has been proven: 3M Company utilizes such a kiln at its central waste disposal facility near St. Paul, Minnesota to incinerate all the waste generated not only in the USA by its various divisions but from its overseas subsidiaries as well. The Sri Lankan government may be interested in developing such a facility near its main industrial zones. WEC may be able to secure a plant visit to the 3M facility as a study tour.

   (iii) There are large quantities of valuable chemicals "hidden" in a tire, the most important being the elastomeric hydrocarbon, the various oils, and the carbon black.

These can be regenerated through thermal cracking, similar to the cracking done at oil refineries. The technology is well known in theory but it has to be adapted to each individual rubber composition. Also, it requires quite a bit of supporting equipment to get rid of other, unusable materials, notably tars.

(iv) A recently developed reuse of rubber, especially tires, is the addition of ground rubber to asphalt paving. In developed countries with extensive road network, there is an unending potential to dispose of rubber in this manner. The only specialized equipment needed is one to remove the metallic components (the beads and, in case of wire belted radials, the belt material) and a grinder. Both cryogenic grinding and ambient grinding has been tried successfully. The pavement thus "reinforced" with rubber has shown better impact resiliency and, in some cases, better traction. See items 1 and 2 in Articles and item 1 in Surveys, both under Appendix F. A very recent article by Gibala and Hamed (Rubber Chemistry and Technology, 1994, pp. 636-648) describes the potential of using ground vulcanized rubber to "extend" (i.e., use as an additive to) green rubber mix. The same article also cites 7 additional papers dealing with similar topics.
Whether this last possibility has any potential in Sri Lanka will depend on the government's desire to improve the road system. Currently there are plenty of unpaved or very poorly paved roads which could benefit from this technology which could use cheap or free tires in lieu of expensive asphalt.

3. Replace the existing liquid waste "treatment" facility with a much larger one, capable of handling everyday needs for human wastes.

Safety

1. Issue dust masks for warehouse and Banbury personnel.
2. Clearly mark all emergency shut-off devices (consider color coding to reduce potential mistakes).
3. Require the use of all safety mandated personal equipment.
4. Publicize each safety incident and accident; describe corrective action taken to prevent recurrence.

In general

1. KT should conduct inductrination seminar to promonte awareness of environmental issues among its workers.

1. RE environmental assessment audit for USAID:

Although the privatization *per se* had neither beneficial nor adverse effects on the environment, the environmental conditions at the plant are such that had this audit been carried out in its proper time, our recommendation to USAID would have been to withhold their guarantee for the bond issue until, at least, a token environmental clean-up has been accomplished.

Our current recommendation is that USAID work closely with the proper government agencies helping them
(a) to develop appropriate environmental norms for all kinds of waste discharges [including air emission and landfill requirements],
(b) to learn about the mechanism of enforcement of environmental regulations,
(c) by providing guidance in developing needed occupational safety and health requirements.

APPENDIX A.

FIGURES AND PHOTOGRAPHS

FIGURE 1

CUT-OUT OF A RADIAL TIRE SHOWING
LOCATION AND NAMES OF INDIVIDUAL COMPONENTS

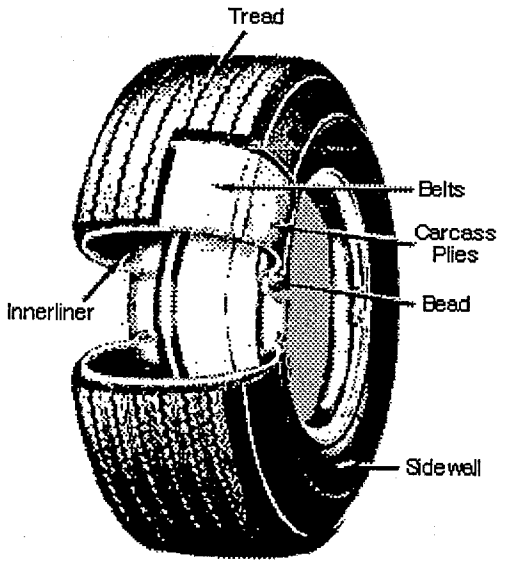

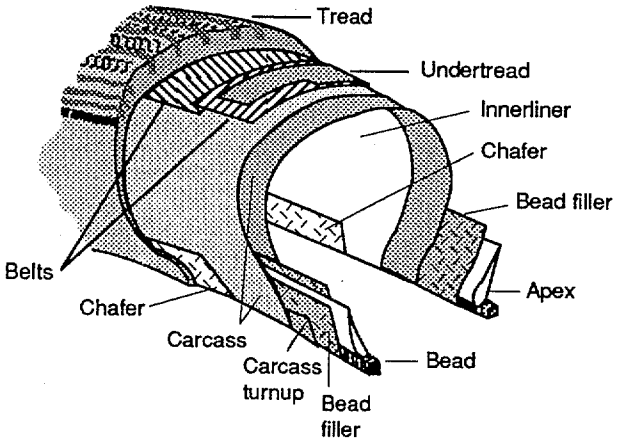

PHOTOGRAPHS TAKEN DURING THE SEPTEMBER 28 MEETING

CLOCKWISE, FROM THE LEFT: "HEVA", AUTHOR, L P. FERNANDO, ROHAN FERNANDO, MR. RATNAYAKE

LEFT TO RIGHT: "MALVILA", ROHAN FERNANDO, MR. RATNAYAKE

PHOTOGRAPHS TAKEN DURING THE SEPTEMBER 28 MEETING

LEFT TO RIGHT: PALITA. P. SUBASINGHE, "HEVA", AUTHOR

LEFT TO RIGHT: PALITA. P. SUBASINGHE, "HEVA"

APPENDIX B.

ITINERARY

DATES	ACTIVITIES
September 19-21	Traveled from Philadelphia to Colombo, Sri Lanka *via* Taipei and Bangkok
September 21 1:30 P.M.	Arrived at hotel, downtown
September 21 5 P.M.	Met at USAID with personnel (2) and members (2) of the local WEC team to discuss objectives
September 22	At KT: met with top executives. General discussion of plant conditions (production and morale) and "audit" objectives
September 23 till 2 P.M.	At KT: concentrated on energy related problems. Toured power plant, "incinerator", waste disposal facilities.
September 23 2:30 P.M.	Met at USAID for preliminary briefing
September 24-26	Prepared draft report for the topics already covered.
September 26	Government hastily decried official holiday to commemorate the assassination of the current prime minister's father
September 26 2 P.M.	Met with WEC team members to discuss KT's financial conditions
September 26 3-5 P.M.	Met with USAID representatives on environmental issues
September 27	All day at KT: obtained details of operations, toured analytical laboratory and physical test facilities
September 27 2-5 P.M.	Conducted *impromptu* tour of KT for USAID representatives
September 28 A.M.	Preparing preliminary report
September 28 P.M.	Made oral presentation of findings and recommendations to key top management
September 29 A.M.	Met with chairman of the Kelaniya Area Council
September 29 P.M.	Met with middle management of Board of Investment
September 30	Planned return from Colombo through India aborted by airline because of the plague scare. No flights leave for Delhi.
September 30 - October 1	Trying (and finally succeeding) to secure alternate passage from Sri Lanka to Europe
October 2	Leave Colombo for home *via* Abu Dhabi, Amsterdam and Budapest

APPENDIX C.

PERSONS AND ORGANIZATIONS VISITED

MALWILA G. DISSANAYAKE	President & Chief Executive Officer Resource Organization & Management International (Pvt.) Ltd.
CHAMENDRA HEWAVISENTHI	Water Resources Engineer Water Management Authority Mahaweli Authority
JON D. LINDBORG	Private Enterprise Officer USAID/Sri Lanka
DINESHA DE SILVA	Project Management Specialist Office of Private Sector Development USAID/Sri Lanka
M. GLENN RUTANEN-WHALEY	Project Development Officer Environment and Capital Projects USAID/Sri Lanka
TISSA FERNANDO	Senior Manager-Environment Board of Investment of Sri Lanka
CHANNAKA DE SILVA	Chairman Kelani Tyres, Ltd.
L.P. FERNANDO	Executive Director Kelani Tyres, Ltd.
ROHAN FERNANDO	Managing Director Kelani Tyres, Ltd.
PALITA P. SUBASINGHE	Energy Manager Kelani Tyres, Ltd.
DES PEGLER	Technical Advisor Kelani Tyres, Ltd.

APPENDIX D.

BUSINESS CARDS

ROMIN
ROMIIN

Malwila G. Dissanayake
President & Chief Executive Officer

Resource Organization & Management International (Pvt) Ltd.
Resource Organization & Management International Investments (Pvt) Ltd.

No. 1, 6th Lane, Galle Road, Colombo 3, Sri Lanka.
Tel & Fax: 94-1-575233

Chamendra Hewavisenthi
B.Sc. M.Sc. DIC. CEng. MICE
Water Resources Engineer

Water Management Secretariat
Mahaweli Authority
500, T.B. Jayah Mawatha,
Colombo 10, Sri Lanka.
Tele: ~~546289~~, ~~546290~~

Res:
291/52, Havelock Gardens,
Colombo 6, Sri Lanka.
Tele: 582048

USAID

U.S. AGENCY FOR INTERNATIONAL DEVELOPMENT
MISSION TO SRI LANKA

JON D. LINDBORG
Private Enterprise Officer

356 Galle Road
Colombo 3
Phone: (94) 1-574333

Telex: 21305 AMEMB CE
Fax: (94-1) 574264
Internet: jlindborg@usaid.gov

USAID

U.S. AGENCY FOR INTERNATIONAL DEVELOPMENT
MISSION TO SRI LANKA

Dinesha de Silva
Project Management Specialist
Office of Private Sector Development

Office:
356, Galle Road
Colombo 3
Tel: 574333 Fax: 574264/574500

Residence.
27 Deal Place
Colombo 3
Tel: 574832

USAID

U.S.AGENCY FOR INTERNATIONAL DEVELOPMENT
MISSION TO SRI LANKA

M. GLENN RUTANEN-WHALEY
PROJECT DEVELOPMENT OFFICER
ENVIRONMENT & CAPITAL PROJECTS

356 GALLE ROAD
COLOMBO 3
SRI LANKA
TEL: (94-1) 574333
FAX: (94-1) 574264/574500

USAID/SRI LANKA (ID)
DEPT. OF STATE
WASHINGTON D.C.
20521-6100

BOI
SRI LANKA

TISSA FERNANDO
SENIOR MANAGER - ENVIRONMENT

BOARD OF INVESTMENT OF SRI LANKA

Office:
P. O. Box 1768
14, Sir Baron Jayatillake Mawatha,
Colombo - 1, Sri Lanka.
Tel: 320080, 434403 / 4 / 5
Telex: 21332, ECONCOM CE
Fax: 94-1-447995

Residence:
33, Galle Road,
Panadura.
Tel: 034-33275

CHANAKA DE SILVA

Residence: 12, Charles Circus, Colombo 3, Sri Lanka
Telephone: 574937, 574938

CHAIRMAN
KELANI TYRES LTD
NOVA LANKA LTD
UNION COMMODITIES (PVT) LTD
RICH FLAVOUR (PVT) LTD

Office:
Kelani Tyres Ltd
P.O. Box 8,
Kelaniya.
Telephone: 521585
Telex: 21508 A/B TYRECORP CE
Fax: 521585

DIRECTOR
DIYATALAWA WAREHOUSING CO. LTD
DELMEGE FORSYTH & CO. (SHIPPING) LTD.
HOTEL CEYLON INTERCONTINENTAL
PANTANO LTD.

Office:
Union Commodities (Pvt) Ltd
55/73, 55/74 Vauxhall Lane,
Colombo 2.
Telephone: 440604, 440605
446116, 422258
Telex: 21251 A/B UNISHIP CE
Fax: 440604

L P Fernando
Executive Director

KELANI TYRES

Kelani Tyres Ltd
P O Box 8, Kelaniya ,Sri Lanka.
Telephone : 521891, 521241, 521305
Telex : 21508 SLTC CE
Fax : 521598, 440604

Residence :
No. 19, St. Stephen Mawatha
Rajagiriya, Sri Lanka.
Telephone : 863463

Rohan Fernando
Managing Director

KELANI TYRES

Kelani Tyres Ltd
P O Box 08, Kelaniya ,Shri Lanka
Telephone : 438329, 521241, 521305
Telex : 21508 SLTC CE
Fax : 521585, 440604
Celltel : 442577

Residence :
No. 19/1, St. Stephen Mawatha.
Rajagiriya, Shri Lanka
Telephone : 563463

Palita P. Subasinghe
Energy Manager

KELANI TYRES

Kelani Tyres Ltd
P. O. Box 8, Kelaniya, Shri Lanka.
Telephone : 521241, 521305
Telex : 21508 SLTC CE
Fax : 521585

AVON REPRESENTATIVE

Des Pegler
Technical Advisor

KELANI TYRES

Kelani Tyres Ltd
P O Box 08, Kelaniya, Shri Lanka
Telephone : 438329, 521241, 521305
Telex : 21508 SLTC CE
Fax : 521585

Residence :
No. 487/9, Thimbirigasyaya Road.
Colombo 5. Shri Lanka
Telephone : 501076

APPENDIX E.

DOCUMENTS RECEIVED

1. ENVIRONMENTAL NORMS issued by the Board of Investment of Sri Lanka , 1993 September — 11 pages
2. PLAN OF KELANI TYRES' CURRENT FACTORY SITE — 1 page
3. TECHNOLOGICAL PROCESS CHART — 2 pages

All these documents are enclosed in Appendix H

APPENDIX F.

ARTICLES, PUBLICATIONS, SURVEYS CARRIED BY AUTHOR

ARTICLES AND PUBLICATIONS

1. RECYCLING/REUSE OF ELASTOMERS — AN OVERVIEW by John R. Dunn (J. R. Consulting), Paper No. 1 presented at the 144th Meeting of the Rubber Division ACS in Orlando FL, October 26-29, 1993 — 20 pages

2. METHODS OF DEVULCANIZATION by Walter C. Warner (Rubber World), Paper No. 6 presented at the 144th Meeting of the Rubber Division ACS in Orlando FL, October 26-29, 1993 — 13 pages

3. MAKING BIOREMEDIATION WORK WELL FOR YOU in *R&D Magazine*, August 1994, pp. 19-20

4. GREEN AUDITS BRING SAVINGS by Gerry O'Kane in *Asian Business*, July 1994, pp. 42-43

5. 3M ENVIRONMENTAL MANAGEMENT PROGRAM by 3M Company, St. Paul MN, handout during WEC study tour, September 15-16, 199

SURVEYS

1. COMPUTER SEARCH from 1970 to 13 September 1994 on the following key words: Tires, Recycling, Tires and Recycling using
   (a) COMPENDEX*Plus™ — 25 responses
   (b) PTS PROMPT™ — 7 responses

2. COMPUTER SEARCH from 1970 to 13 September 1994 on the following key word: Bio-remediation using COMPENDEX*Plus™ — 20 responses

Copies of these surveys were given to WEC/Colombo team
and — through it — to management of Kelani Tyres

APPENDIX G.

CURRICULUM VITAE OF AUTHOR

Andrew P. Foldi

2833 W. Oakland Drive
Wilmington, Delaware USA
19808-2422

(302) 998-2742

QUALIFICATIONS

Ph. D. Organic Chemistry — University of Delaware, 1963

Chemical Engineering "Diploma" — Budapest Polytechnic Institute (Müegyetem), Budapest, Hungary 1953

Twenty-six years experience with DuPont in pure (2 years) and applied research

Independent consultant since 1985

WEC volunteer expert since September 1993

DETAILS

Born in Budapest, Hungary 1931. Received all basic education there: graduated from high school in 1949 summa cum laude. Obtained a chemical engineering "diploma" (more than B.S. less than M.S.) with organic chemistry major from Budapest Polytechnic Institute in 1953. Worked as a chemical engineer for a Chemical Complex (Tiszavidéki Vegyi Kombinát) until after the 1956 Revolution.

Emigrated to the USA in 1957 and worked for E.I. du Pont de Nemours & Co., Inc. in Wilmington, Delaware from 1957 till 1985, except for a two-year hiatus to obtain a doctorate in Organic Chemistry from the University of Delaware (in 1963). At DuPont, worked as a chemical engineer in Plastics Department until 1960. From 1962 on, held various positions in Textile Fibers Department in pure research (at Carothers Laboratory at the Experimental Station) and in applied research and development (at the Textile Research Laboratory at Chestnut Run), closely related to industrial fibers and a full range of mechanical rubber goods. Acquired in-depth knowledge of nylon, polyester and p-aramid fiber production and end-use. Traveled extensively on business in the U.S., and to Japan, England and Germany.

Took early retirement in 1985 from DuPont as a senior research chemist, and started own company: C & C CONSULTANTS. Has been consultant in the field of textile fibers and mechanical rubber goods to the U.S. Army and Navy, to DuPont, to other research institutes, and to a law firm. Contract consultant to DuPont since 1986. Invited to Goodyear and to AMMRC (Army; in Watertown, MA) to give seminars. As part of this consultant business, traveled to Australia, France and Switzerland. Participated for 2 years as official technical interpreter in business negotiations between DuPont and a Hungarian textile firm. Also served as technical writer and artistic consultant for several manuals, brochures used in the textile industry. As a WEC expert, first as volunteer then oncontract, travelled to Indonesia (twice), to Poland and to Hungary. Acted as technical interpreter for WEC's Hungarian study tour in the US.

Published 11 articles, extensively contributed to 2 books, gave 7 speeches and 4 seminars/lectures in the field of Short Fiber Reinforced Elastomers (see attached bibliography). Co-owner of 13 patents (plus 3 applications); made 2 "anonymous disclosures".

Member of the "Rubber Division of the American Chemical Society", of the "Society of Sigma Xi", and of the "Delaware Science Alliance". Member of the Editorial Advisory Board of the Journal of Elastomers and Plastics from 1990 to 1992.

Languages: English, Hungarian, German, and some French.
Hobbies: sailing, travel, history, classical music, photography.

BIBLIOGRAPHY

Andrew P. Foldi

PUBLICATIONS

1. "Production of Synthesis Gas from Methyl Alcohol on a Laboratory Scale", **Magyar Kémikusok Lapja, 10**, p. 210 (1955)
2. "Conformation of ψ-Ephedrine; Copper Chelates of 2-Amino-alcohols", **Chemistry and Industry, 1955**, p.1297
3. "A Novel Addition of Hydrogen Sulfide to the Nitrile Group of Arylsulfonylcyanamides", **Chemistry and Industry, 1956**, p.1230
4. "Chelates and Conformation of Cinchona Bases", **Chemistry and Industry, 1957**, p. 465
5. "Addition of Hydrogen Sulfide to the Nitrile Group of Arylsulfonylcyanamides by Means of Thiosulfuric Acid", **Acta Chim. Academ. Sci. Hung., 13**, p. 111 (1957)
6. "Studies in the Field of 1,3-Carbanion Migration", **University Microfilms** 64-2204 (1964)
7. "The Preparation of Highly Branched Ketones and Alcohols", **J. Chem. Soc., 1969**, p. 121
8. "Reinforcement of Rubber Through Short Individual Filaments", **Rubber Chemistry and Technology, 49**, p. 379 (1976)
9. "The Use of Kevlar® Aramid Pulp and Staple to Reinforce Elastomeric Sheeting", **Journal of Industrial Fabrics,** Vol. **1**, No. 2, Autumn 1982
10. "Enhancement of Rubber Properties *via* Short Aramid Fibers" in "**Elastomers and Rubber Technology**", Vol. **32**, p. 427-443 (1987), Singer and Byrne editors, published by Batelle
11. "Enhancement of Rubber Properties *via* Short Aramid Fibers", **Rubber World, 196**, p. 19-26 (May) and 29 (August) (1987)
12. "Short Fiber Reinforced Rubber: A New Kind of Composite", *Book chapter* in **Composite Applications: The Role of Matrix, Fiber, and Interface**, Vigo and Kinzig editors, VCH Publishers, Inc. 1992, p. 133-177
13. "Design Considerations and End-Use Applications of Short Fibre Filled Rubbers and Thermoplastic Elastomers", *Book chapter* in **Short Fibre-Polymer Composites**, De and White editors, Ellis Horwood (United Kingdom) publisher — in printing

SPEECHES, SEMINARS, ETC.

1. "Rubber Reinforcement Through Individual Textile Filaments", **Paper** presented at a meeting of the Rubber Division, American Chemical Society in New Orleans, Louisiana, October 1975
2. "Kevlar® Aramid Pulp and Staple to Reinforce Elastomer Sheets", **Paper** presented at a meeting of the Rubber Division, American Chemical Society in New Orleans, Louisiana, October 1981
3. "Kevlar® Aramid Pulp and Staple as Rubber Reinforcers", **Lecture** presented to the International Society of Industrial Fiber Manufacturers at Charlotte, NC, October 3, 1984
4. "Enhancement of Rubber Properties *via* Short Kevlar® Aramid Fibers", **Seminar** presented at the Army Materials and Mechanics Research Center in Watertown, Massachusetts, May 23, 1985
5. "Enhancement of Rubber Properties *via* Short Kevlar® Aramid Fibers", **Paper** presented at the Scandinavian Rubber Conference in København, Denmark, June 11, 1985
6. Invitee and **poster** presentor ["Reinforcement of Rubber by Short Aramid Fibers"] at the Thirty-Second Sagamore Army Materials Research Conference in Lake Luzerne, New York, July 22-26, 1985
7. "Reinforcement of Rubber Compounds with Short, Individual Filaments: Theory and Practice", **Paper** to be presented at a meeting of the Rubber Division, American Chemical Society in New York, NY on April 10, 1986
8. "Reinforcement of Rubber Compounds *via* Short, Individual Filaments: Theory and Practice", **Paper** proposed and accepted for the International Rubber Conference in Gøteborg, Sweden, June 1986 (but withdrawn)
9. "Reinforcement of Rubber Compounds with Short, Individual Fibers: Theory and Practice", **Paper** presented at the American Chemical Society National Meeting in Anaheim, CA (USA), September 9, 1986
10. "Rubber Compounds Reinforced with Short, Individual Fibres: A New Kind of Composite", **Paper** presented at the '88 IRC International Rubber Conference and Exhibition in Sydney, N.S.W. Australia, October 13, 1988
11. "Elastomeric (Rubber and Thermoplastic) Compounds Reinforced with Short, Individual Fibres: A New Kind of Composite", **Seminar** given at Goodyear, Akron, Ohio, February 22, 1990
12. "Elastomeric Composites *via* Reinforcement with Short, Individual Fibers", **Paper** presented at the '90 IRC International Rubber Conference and Exhibition in Paris, France, June 13, 1990
13. "Reinforcement of Elastomeric Materials with Short and Microscopic Fibers and Particles", **Paper** accepted for the International Rubber Conference in Beijing, China, October 1992 (not presented because of lack of financial sponsor)

APPENDIX H.

ATTACHMENTS

LIST OF ATTACHMENTS

1. General material and investment balance in manufacturing opearations, including waste disposal and pollution sources, and potential waste minimization and/or recycling — Generated by the A. P. Foldi — 1 page

2. Financial analysis of Kelani Tyres and its competitive position — Generated by Smith New Court Far East Ltd. — 12 pages (Obtained from USAID)

3. Plan of Kelani Tyres current factory site — 1 page

4. Technological Process Chart — 2 pages

5. Environmental Norms, issued by the Board of Investment of Sri Lanka, 1993 September — 11 pages

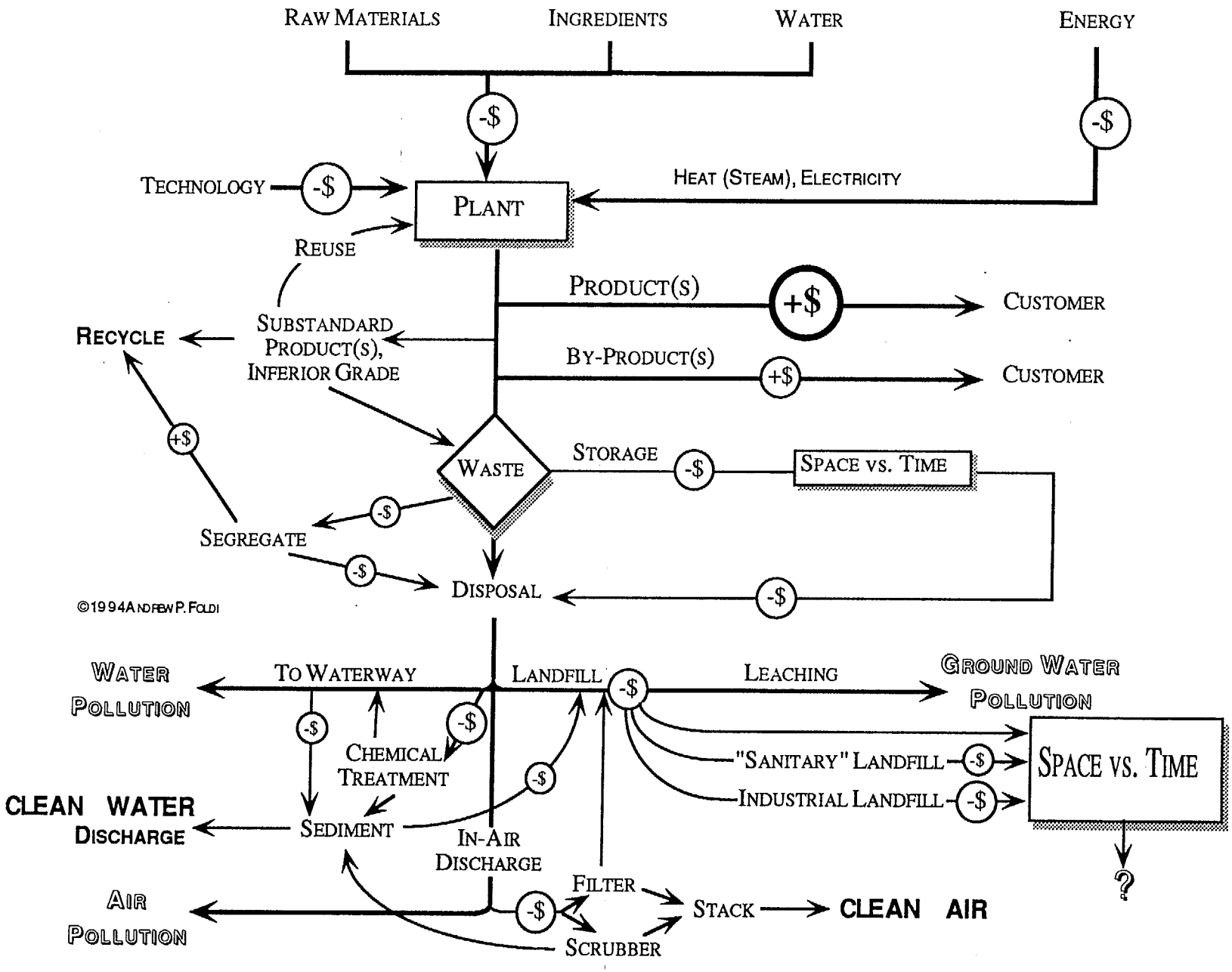
RAW MATERIALS
INGREDIENTS
WATER
ENERGY
-$
-$
TECHNOLOGY
-$
PLANT
HEAT (STEAM), ELECTRICITY
REUSE
PRODUCT(S)
+$
CUSTOMER
RECYCLE
SUBSTANDARD PRODUCT(S), INFERIOR GRADE
BY-PRODUCT(S)
+$
CUSTOMER
+$
WASTE
STORAGE
-$
SPACE VS. TIME
-$
SEGREGATE
-$
DISPOSAL
-$
©1994 ANDREW P. FOLDI
WATER POLLUTION
TO WATERWAY
LANDFILL
-$
LEACHING
GROUND WATER POLLUTION
-$
-$
CHEMICAL TREATMENT
"SANITARY" LANDFILL
-$
SPACE VS. TIME
-$
INDUSTRIAL LANDFILL
-$
CLEAN WATER DISCHARGE
SEDIMENT
IN-AIR DISCHARGE
?
FILTER
AIR POLLUTION
-$
STACK
CLEAN AIR
SCRUBBER

SMITH NEW COURT
SRI LANKA

MANUFACTURING
Automobile tyres

30 June 1994

Kelani Tyres

BUY

One for the road

Rs53

Sonali Chandra 852-533 1715
Mahendra Jayasekera 941-433 958

Ric: TYRE.CM

Sri Lanka should excel in tyre manufacture thanks to abundant indigenous rubber supply and cheap skilled labour. On 8x 1995E earnings—compared with the market average of 14x—Kelani Tyres, the country's dominant tyre manufacturer, is a strong buy.

➤ Corporate renaissance

Teething problems following privatization in 1992 are over, and new management is expanding capacity and introducing new designs. These steps should significantly improve profitability: we expect 1995 EPS to rise 347%.

➤ Easy profit from import/retread substitution

Production increases will go straight to the bottom line as the company can easily undercut imports, which account for 33% of the new tyre market. The retread market is expected to contract.

➤ Strong brand name

A technology tie-up with Avon Tyres (UK) and a very strong brand name in the local market enhance the company's position.

➤ Set to bounce back

The stock price has dropped 43% in the last 4 months, against a 35% market fall. It should recover strongly as interest returns to the market.

➤ Long Term: Overweight

Intrinsic cost advantages, a positive long-term profit outlook and recent transition to the private sector provide the opportunity to buy into an excellent growth stock very cheaply and at the beginning of the story.

Estimates — Take-off in 1995

Year to 31 March	1993	1994	1995E	1996E
Net turnover	560	617	1,038	1,140
Net profit (Rs m)*	(28)	42	217	278
Fully-diluted EPS (Rs)**	–	1.5	6.7	8.9
EPS growth (%)	–	150	347	33
PE (x)	–	35.3	7.9	6.0
DPS (Rs)	0	0	0	5
Yield (%)	0	0	0	2.8

* Before extraordinary items.
**Adjusted for dilution from Rs7.5m convertible debentures.

Key Data

Shares in issue (m)	26.2	Mkt cap (Rs m)	1,388.6
Exchange rate (Rs/US$)	49.3	Mkt cap (US$ m)	28.2
Book value/share (Rs)	28	Gearing (%)	21
Major shldr:	Avon Lanka 60%	Free float (%)	30

Performance

12-Month High/Low: Rs98/42

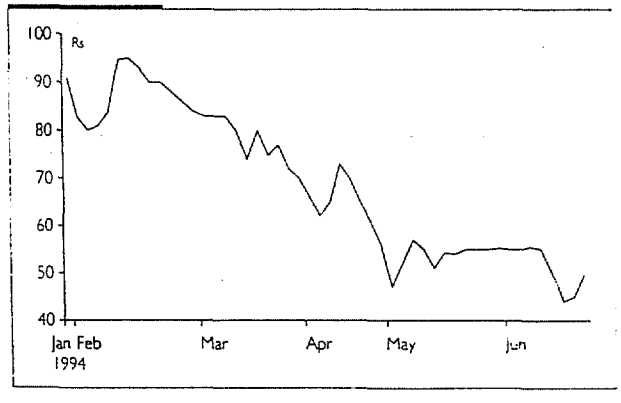

	1 mth	3 mths	12 mths
Absolute (%)	(18.2)	(41.5)	n/a
Relative to CSE (%)	(11.1)	(21.4)	n/a

Smith New Court Far East Ltd.,
in assoc. with C.T. Smith Stockbrokers (Pvt) Ltd.,
1st Floor, Cargills Building,
40, York Street
Colombo 1, Sri Lanka
[illegible]

BEST AVAILABLE COPY

1 HISTORICAL PERSPECTIVE

NOVA

Kelani Tyres is Sri Lanka's dominant tyre manufacturer. It was privatized under the government economic reform programme in March 1992, and the 60% controlling stake was sold to ~~Avon~~ Lanka.

Kelani Tyres was privatized in 1992.

Kelani Tyres (KT) was established in 1967 as The Ceylon Tyre Company, with machinery and financial assistance from Russia. It soon entered a technology-assistance agreement with Goodrich Tyres (US), but production techniques and plant technology became outdated after this expired in 1984. A new technology agreement with Avon (UK) is addressing the problem.

Products range from motor-cycle tyres to tractor tyres.

KT's plant is on a 52-acre freehold site in Kelaniya, close to Colombo's airport. Products range from motor-cycle tyres to tractor tyres. Current capacity is 20,000 standard tyres/month. (One standard tyre is roughly equivalent to 2 light truck tyres.) Utilization is 80%.

2 COMPETITIVE POSITION

KT easily undercuts the post-duty cost of imported tyres: the cheapest imports are 27% more expensive and account for 33% of the new-tyre market. It dominates with 60% market share; nearest rival ACPL (Associated Ceat Pvt. Ltd.) accounts for 7%. In the long term, cheap skilled labour and abundant natural-rubber supply will make KT competitive in export markets, particularly when the benefits of the Avon Tyres (UK) technology tie-up come through.

Sri Lanka's Tyre Industry

Competition

Main competition is in retreads and imported new tyres.

KT's main competition is from ACPL in retreads and from imported new tyres. The company can compete on price with imports and is upgrading its distribution and after-sales service to compete effectively with retreads.

Table 1: Breakdown of Sri Lanka's Tyre Market*

(000's of actual units) Category	Kelani	ACPL + imports	New tyres, subtotal	Retreads	Tota
Car tyres	81	183	264	156	42
Light truck tyres	163	103	266	640	90
Truck tyres	96	12	108	380	4[illegible]
Tractor tyres	10	4	14	56	7
Scooter & motor-cycle tyres	58	122	180	–	18
Total	408	424	832	1,232	2,06
Standard tyre equivalent	216	144	360	851	1,2

*Estimates for year to 31 March 1995.

Inner tubes
Flaps?

BEST AVAILABLE COPY

Retreads

Retreads meet a significant portion of Sri Lanka's tyre demand, for the following reasons.

1. KT has been unable to meet demand for its products owing to capacity restraints.
2. Tariffs keep the price of imported tyres high.
3. Consumers prefer retreads as their initial cost is lower. This is particularly true in the passenger-car market, where buyers are individuals, not companies.
4. KT has inadvertently encouraged the local retread industry by producing tyres with carcasses (the central body on which the retread is moulded) stronger than those made internationally: a KT tyre can be retreaded 4-5 times. The company's new tyres have been redesigned to remedy this "problem". *
5. Excise duty (10%) on new tyres but not on retreads had increased the cost difference between the two. As this duty was removed in February 1994, KT light truck tyres now compete effectively with retreads.

* This philosophy increases used tire disposal problems.

We expect consumers to increasingly buy new tyres as capacity increases, quality improves and tyres are marketed using the Avon name.

Sri Lanka's tyre market is growing 10% annually.

Sri Lanka's tyre market is growing about 10% annually. Currency depreciation and high import tariffs on new vehicles mean that the absolute number of vehicles will not expand rapidly, but as KT's current production is 80% truck tyres, demand for its products is a function more of economic growth, particularly in public transport, agriculture and tourism, than of retail demand.

Imports

Imports account for 33% of the new-tyre market.

Imports account for 33% of the new-tyre market—despite KT's price advantage—because the company has had insufficient capacity to meet total new-tyre demand, particularly in the passenger-car market. They have come from Korea, Indonesia, Japan and, more recently, India.

Given expected 5% rupee depreciation, KT has an advantage over imports. Devaluation of the Indian rupee and recent car-industry recession have led to the import of Indian tyres, but these are perceived as inferior. All imported tyres bear a 45% import duty. The actual cost to the consumer is shown in Table 2

cost insurance freight

Table 2: Comparative Cost of Imports

	(%)
CIF cost of imports	100.0
Import duty	45.0
Cess	4.5
Business turnover tax	18.1
Defence levy	3.5
Excise duty (where applicable)	18.1
Total	189.2

Kelani undercuts imports as a result of import duties. Tariffs are unlikely to change significantly.

Import duty and the fact that other taxes are inclusive of it allows KT to significantly undercut imports, even at current production and efficiency levels. Import duty is unlikely to be changed significantly. (At the time of privatization there was an understanding between the company and the government that this degree of protection would remain.)

42

The tyre industry is strategically important to Sri Lanka.

The tyre industry has been identified as strategically important to Sri Lanka, for 3 main reasons.

1 The government has a policy of adding value in Sri Lanka's rubber industry. Currently 80% of the country's rubber is exported unprocessed rather than used for domestic manufacture. As the largest domestic rubber consumer, KT has considerable influence.

2 Since KT employs 1,600 people directly and considerably more indirectly, the government is unlikely to implement changes that would threaten employment. As 1994 is an election year, drastic changes in tariff structures are unlikely.

Import substitution could double KT's sales.

3 Sri Lanka imports 44,000 standard tyres annually, compared with KT's current annual production of 216,000. Import substitution will be the major area of KT's future profit growth.

Pricing

The company's policy is to sell all output and undercut imports.

KT's pricing policy is a balance between competing with retreads and marginally undercutting imports. As long as its products are cheaper than imports, the company can sell its entire output at the expense of imports. It cannot, however, establish a price much higher than that of retreads.

In 1992 ex-factory prices were increased 10%, with no effect on sales volume. KT expects to be able to pass on inflationary and other cost increases easily. However, variations in sales taxes can affect the retail price, and consequently demand.

Table 3: Prices, Kelani Tyres vs Imports and Retreads

(Rs)	Kelani	Cheapest imports	Difference (%)	Retreads
Radial (155-13 inch)	1,775	2,450	38	650
Light truck (600-14 inch)	1,875	2,858	52	1,610
Truck (900-20 inch)	5,900	7,500	27	2,765

Technology tie-up with Avon Tyres (UK)

In 1992 KT concluded a technological tie-up with Avon Tyres (UK).

KT signed a technical-assistance agreement with Avon Tyres (UK) in September 1992 to facilitate improvements in manufacturing technology (design, raw-material mix and production process) and production techniques (schedules, product mix and operational efficiency).

In return for royalty payment (2% of turnover up to Rs500m and 3% on the balance) starting in January 1993, Avon has agreed to supervise and co-ordinate the upgrading of KT's products, technology and processes. A resident secondee ensures that improvements are implemented according to plan.

Avon Tyres, which manufactures tyres for Rolls Royce and Bentley, is mainl a technology exporter. It has considerable experience in this area followin agreements similar to the KT tie-up with companies in Iran, Jordan, Malaysi Mexico and the US.

BEST AVAILABLE COPY

Avon's involvement will focus on 4 areas.

1 Designing new tyres. Despite significant advances in tyre technology in the last 10 years, KT is using an early 1980s prototype.

2 Improving efficiency and cost control.

3 Increasing capacity in a programme involving both renovation of existing machinery and a gradual phasing in of new machines, particularly where there are obvious production bottlenecks.

Avon Tyres will design new tyres, improve efficiency, boost capacity and support marketing of the Kelani brand.

4 Marketing. New KT products will be marketed in Sri Lanka under the "Kelani Super" name. KT will be allowed to use the Avon name in advertising provided the product meets the UK company's quality standards. This should enable it to compete with popular foreign brands such as Michelin.

Export potential

KT is looking to increase exports.

KT realizes that while short-term growth will come from import substitution, it can compete successfully in export markets in the long term. It has already started filling export orders from Nepal, Vietnam, Pakistan and the Middle East. The export thrust will be pursued fully only when product-line restructuring is completed. As the marginal benefit (marginal revenue less marginal cost) from exports is significantly below that from domestic sales, KT will first satisfy pent-up demand from import substitution at home.

Marketing network

The distribution network is Sri Lanka's most extensive.

KT's distribution network is a major strength. The island-wide network of 225 dealers is Sri Lanka's most extensive and a significant entry barrier. The supply-demand imbalance allows cash sales instead of credit. KT also monopolizes demand from government institutions and public-transport companies.

Table 4: KT's Dealer Network

Province	No. of dealers
Western Province	98
Southern Province	31
Sabaragamuwa Province	14
North Central Province	10
North Western Province	23
Uva Province	11
Central Province	25
Eastern Province	6
Northern Province	7
Total	225

Potential local competition

Other players offer only limited competition.

AMW (Associated Motorways), a leader in Sri Lanka's retread business, has entered an agreement with major Indian tyre producer Ceat to manufacture new tyres in Sri Lanka. Operations have started, but output will target the bigger Indian market in the long term. The Ceat/AMW joint venture, ACPL (Associated Ceat Private Ltd.), can produce about 10% of KT's output (60,000 light truck tyres in the first year and 100,000 in the second). Although it lacks KT's brand identification, it will still compete in import substitution. It will also produce only light truck tyres, not larger truck tyres, where KT has a stronger market niche.

is only 163m

44

3 PROFIT ANALYSIS & OUTLOOK

Last year (1993-94) was horrible for KT. Having made Rs93m pre-tax profit in FY1990 (ended 31 March 1991, before privatization), the company was hit by a series of industrial disputes. A comprehensive agreement with the union was reached in August 1993, and there have been no disruptions since. Profitability is expected to rebound in 1994-95 as KT rationalizes its product range, shifts to higher-margin branded products and enjoys periods of strike-free production.

If all is light truck tires: 108m

Table 5: Earnings Record

Year to 31 March (Rs m)	1992	1993	1994	1995E	1996E
Gross turnover	885	734	913	1,330	1,480
Turnover tax/excise duties/defence levy	171	174	296	292	340
Net turnover	**714**	**560**	**617**	**1,038**	**1,140**
Gross profit	**135**	**49**	**74**	**214**	**286**
Net income from land sales	0	0	25	60	30
Operating expenses	45	57	35	32	38
Interest payable/(receivable)	(4)	43	22	25	0
Exceptional items	75	0	0	0	0
Profit/(loss) before tax	19	(51)	42	217	278
Transfer from deferred tax	(4)	(23)	0	0	0
Tax charge	0	0	0	0	0
Net profit before ext. items	**23**	**(28)**	**42**	**217**	**278**
Extraordinary items	0	0	(23)	0	0
Net profit after ext. items	**23**	**(28)**	**19**	**217**	**278**
Turnover growth (%)	20	(5)	22	46	11
Gross margin (%)	19	9	12	21	25
Net margin (%)	3	–	7	16	24
ROE (%)	3	–	1	21	22

We expect recovery in 1994-95 output on settlement of industrial unrest.

Production and price assumptions

Output should recover to 216,000 standard tyres in the year to March 1995.

Our profit forecast for the year to March 1995 is based on estimated annual production of 216,000 standard tyres. This compares with 204,000 in the year to March 1992 (when there were no industrial problems), 154,000 in the year to March 1993 (when 5 months' production was lost) and 125,000 in the year to March 1994, (when 4 months' production was lost).

Capacity

Tyre manufacture comprises 3 processes.

1. Compounding, in which natural rubber, carbon black and other raw materials are mixed to produce the compound of which tyres are made.
2. Building, which involves creating the tyre by adding one strip of compound to another until the tyre shape is finished.
3. Curing, which involves heating the tyre under extreme pressure and moulding in the grid pattern.

Fabric!

Introduction of new tyre patterns and new moulds slowed the pace of capacity expansion earlier this year. Simple changes in work practices and more efficient factory management should increase capacity to 20,000 tyres monthly without significant capex.

45

On a 1-year view, KT intends to increase capacity by addressing production bottlenecks. While it has surplus capacity in compounding and machine building, there is a bottleneck in curing. One 2nd-hand curing machine costing Rs5-10m would add 1,000-1,300 standard tyres to monthly output. The machine is being bought from Avon; it will be installed in August 1994.

Radial capacity is limited.

KT has only one tyre-building machine capable of producing radial tyres as opposed to cross-ply tyres. A 2nd-hand radial power-building machine costs about US$300,000, but as radials sell for 30% more than cross-ply tyres and margins are higher the company is expanding this area via a joint-venture agreement with Avon. The first batch of tyres is expected in June 1994; output of 10,000 radials/month for passenger cars is expected by March 1995.

Raw-material costs

New designs should result in significant raw-material-cost saving.

Avon's new designs would also reduce raw-material requirements. KT's tyres are over-engineered owing to their old-fashioned design: a current standard 600-14 truck tyre weighs 11.5kg, while a comparable Avon tyre is designed to weigh only 8.0kg. KT expects new designs to reduce total raw-material costs 10%.

An approximate breakdown of raw-material costs and margins based on current retail, raw-material and labour prices, is given in Table 6.

Table 6: Cost Breakdown of a Standard Tyre*

	(%)
Sales price	
Sales discount	10
Turnover, defence levy & excise tax	12
Imported raw materials	13
Rubber	10
Nylon cord	10
Labour	9
Energy	6
Production overheads	3
Administrative & financial overheads	3
Net-profit margin	18

*Based on 20,000 standard tyres monthly, after increased labour costs.

Cheap local rubber and inexpensive labour are major advantages.

The largest costs are imported carbon black, steel wire, nylon and chemicals. Electricity and oil costs are also significant. KT's chief competitive advantage are cheap indigenous raw material and labour compared with internation tyre producers, despite the recent pay rise.

Rationalization

The product range will be rationalized to concentrate on high-margin items.

KT intends to boost profitability by rationalizing its product range. As government-owned corporation it made a full range of tyre and tyre-relat products—including inner tyres, flaps, scooter and motor-cycle tyres, passe ger-car tyres, light-commercial tyres, truck and bus tyres and tractor tyres based on the philosophy that its prime objective was not profit maximization some items were made at a loss owing to limited production runs—l provision of a service to the community. New management intends rationalize the product base and concentrate on light truck tyres and brand products, which contribute the bulk of profit.

46

Tax

Negotiations on acquisition of KT and its assets and a Rs75m donation to the government out of cash reserves at the time of privatization have resulted in tax allowances worth Rs550m.

Provisions for corporate tax are unlikely in the foreseeable future.

Capex was about Rs50m in the year to 31 March 1994. As KT increases capacity in the next 2 years, further fixed assets will be required, providing additional allowances. This, together with recent declining corporate tax rates in Sri Lanka, makes provision for corporate tax unlikely in the foreseeable future.

Strikes

There have been a number of strikes since privatization.

After a strike-free history—including during the 1988-89 JVP political upheaval—KT was hit by a 6-week stoppage at the time of privatization in March 1992 on the issue of whether workers had been adequately consulted and compensated for becoming private-sector employees. Stoppages have since caused a loss of 9 months' production, while inefficient production at other times has severely reduced margins.

Import restrictions were lifted temporarily.

A new-tyre shortage resulting from the strikes forced the government to import of 60,000 tyres at reduced tariffs. KT was one of the dealers designated to sell the imports, strengthening its bargaining power with the striking unions. The imports arrived in August–October 1993, affecting the company's contribution earned in those months. The stock has since been fully sold.

Excise duty was imposed and withdrawn.

In an unconnected move, the government imposed 10% excise duty on new tyres, making them unattractive compared with retreads. This step hit margins, particularly in competition with retreads, very badly. In February 1994 duty on light truck tyres, KT's main product, was withdrawn.

February 1993 strike savaged margins

Production was hit badly starting in 1992.

In February 1993 KT was affected by a 4-week strike following "go-slow" protests starting in 1992. The stoppage had 2 main causes. First, workers insisted they were entitled to a 30% pay rise granted to civil servants in the November 1992 budget. Second, they objected to new management's introduction of new working practices and productivity targets. This strike was settled in March 1993, with employees receiving a 30% pay rise and a 10% incentive bonus if output reached 775 standard tyres/day. It caused production in the year to 31 March 1993 to fall to 154,000 standard tyres, compared with 204,000 in the previous year, and savaged margins.

A 4-month strike affected production over May–August 1994. In addition to losing 4 months' output, KT took a Rs9.1m one-off raw-material write-off. The company paid Rs3.5m to employees on settlement of the dispute in August 1993. The direct financial impact was about Rs40m in the year to 31 March 1994.

Further industrial action is unlikely

We do not expect further stoppages.

We do not foresee further industrial action. Under the government's privatization policy, employees received 10% of KT's shares free. When the company listed and the workers were given their entitlement, several sold their allotments and sought alternative employment. These developments have greatly improved labour relations.

BEST AVAILABLE COPY

4 FINANCIAL HEALTH & STRUCTURE

After privatization, gearing was 34%. Remaining long-term debt of Rs153m will be paid off through the sale of surplus land, from operating cash flow and by conversion into equity, positioning KT favourably to fund future capacity expansion. Long-term debt is 21% of shareholders' funds.

Asset revaluation, debenture issue

KT made a debenture issue after privatization.

After privatization KT revalued its fixed assets, resulting in a Rs660m revaluation reserve. This was offset by a Rs275m debenture issue in part-payment to the government for the ownership change.

The Rs275m debenture issue broke down into 2 tranches.

1. A Rs200m secured straight debenture with a 19% annual interest rate redeemable in 5 equal annual instalments starting 31 March 1993. The first 2 instalments have been paid off, leaving Rs120m to be repaid.
2. A convertible debenture issue with a 10% annual interest rate, convertible into ordinary KT shares at par on or until 31 March 1995, at the holder's option. Maximum possible dilution is 7.5m shares. As of 31 March 1994, 0.2m shares had been converted.

Expansion should not cause a funding problem

Cash flow has returned to pre-strike levels.

Current estimated gearing is 21%. Capex plans in the coming year are limited to ongoing refurbishment and repair of machinery at an approximate Rs75m cost. Cash flow has returned to pre-strike levels in recent months. Since the bulk of sales is on a cash basis, operating cash flow is particularly strong. New curing and tyre-building machines are likely to be purchased in the long term, but this is not a problem as adequate cash reserves or supplier finance will be available.

Working-capital management should be more efficient

There is no requirement for receivables or finished-goods funding.

New management expects to be far more efficient in managing working capital. Demand for KT's tyres well in excess of supply means that minimum capital is tied up in receivables and finished goods. Inventories are never more than one month, except in pre-holiday periods. Only imported raw-material supplies normally need to be maintained: the high stock level in the financial accounts is all raw materials, not finished goods.

Table 7: Balance Sheet

As of 31 March (Rs m)	1991	1992	1993
Fixed assets			
Tangible fixed assets	779	789	777
Intangibles, technical service fee	0	0	22
	779	**789**	**798**
Current assets			
Stocks	216	215	188
Debtors	78	77	97
Cash	49	31	21
	343	**323**	**306**
Creditors: amounts due within one year	113	111	165
Net current assets	230	212	140
Creditors: amounts due after one year	8	240	197
Retiring gratuity	34	36	45
Deferred tax	12	23	0
	955	**703**	**698**
Capital and reserves			
Called-up share capital	260	260	260
Revaluation reserve	659	384	384
Capital reserve	25	25	48
Retained profit	11	34	6
	955	**703**	**698**

Note: Audited 1994 results are not available. Key balance sheet data as of 31 March 1994 are given on the back page of this report.

Land sales

KT should generate significant income from land sales.

The company has 52 acres around its factory in Kelaniya, 10 occupied by buildings, 20 with housing and 25 available for sale. It will sell 10 acres in 1994 and 5 in 1995. At current prices of Rs37,500/perch (160 perches = 1 acre)—net of a 20% capital-gains tax—this should generate profits of Rs60m and Rs30m in the next 2 years. The proceeds will be used to retire debt, to address production bottlenecks and for the new plant.

5 MANAGEMENT

Representatives of Avon Lanka, the new controlling shareholder, make up the new management. Only 1 government-appointed director, Mr T.B. Perera, still sits on the board. Managing Director Rohan Fernando has extensive experience in Sri Lanka's tyre industry, mainly in distribution of imported tyres. Chairman Chanaka de Silva is ex-chairman of the Insurance Corporation of Sri Lanka. Other prominent members of the Avon Lanka consortium are involved mainly in the rubber industry.

New management, new style

Privatization has brought a major change in management style.

KT is undergoing a major change in management style. Management information systems and operating procedures been overhauled. For example, the previous system of purchasing raw materials, consumables and even stationery for employees through a complicated tender process involving advertisements in newspapers and bid evaluations is being amended.

6 VALUATION, LIQUIDITY & TIMING

The government recently disposed of the 30% it had retained after privatization. As is standard in most Sri Lankan privatizations, the new controlling shareholder took a 60% stake, the government retained 30% for a subsequent listing and 10% was given gratis to employees. As part of its purchase agreement with the government, Avon Lanka is not allowed to sell its 40% stake (another 20% is held by friendly groups) for 5 years

Undervalued

KT trades at an undemanding 7.9x 1995E earnings.

The CSE Index has lost 35% in the last 4 months, and KT has plummeted from a February 1994 high of Rs98 to Rs42. At 7.9x 1995E earnings, the stock is significantly undervalued.

Liquidity has improved

Liquidity has improved after the government's divestment of its 30% stake.

A high profile in Sri Lanka and strong fundamentals offer firm support. The government's recent sale of its holding and employees' sales of part of their holdings have generated liquidity: KT is one of the exchange's most frequently traded stocks.

Timing

With industrial disputes settled amicably, KT is poised for expansion and return to profitability. The stock is a core Sri Lankan automotive play, and a slight market upturn should cause a rebound to former levels.

50

Kelani Tyres

June 1994

Activities

Privatized in 1992, KT is Sri Lanka's largest tyre manufacturer, with about 70% market share (216,000 standard tyres). Its only competitor, ACPL (Associated Ceat Private Ltd), produces 50,000 standard tyres. (44,000 standard tyres are imported.)

Characteristics

1. Benefits from cheap local rubber and labour.
2. New management will boost capacity and operating efficiency.
3. High entry barriers, coupled with a small domestic market, discourage new entrants.
4. Set to benefit from technology tie-up with Avon Tyres (UK).
5. The Kelani brand has a very strong local following.

Influences on Forecast

a. Imported-tyre prices.
b. Domestic rubber prices.
c. Changes in excise or import-duty structure.

Assumptions

a. Sri Lanka's rupee depreciates 5% annually over 1994-96.
b. Tariff structure is not altered significantly. This is an election year, and the promoters of Kelani have considerable influence with both political parties.
c. Real GDP growth is 7% annually over 1994-96.
d. Turnover tax is 18.1%, defence levy 3.5% and excise duties 16.5% on car tyres.
e. 216,000 units are produced and sold in the year to March 1995 and 240,000 in the following year.
f. Contribution per unit improves from Rs1,100 to Rs1,200 in 1994-95 and to Rs1,400 in 1995-96 as KT rationalizes its product range, uses the Avon name and produces more higher-margin light truck tyres.
g. There are no further strikes and loss of production.
h. Management fees, technical assistance fees and royalties charged by parent Avon Lanka do not exceed Rs50m in 1994-96.
i. KT sells 10 acres of land in 1994 and 5 in 1995.
j. There is no major addition to debt capital.
k. Depreciation policy for freehold land/buildings is not changed.

Share Data

Main shareholders	(%)
Avon Lanka and associates	60
Employees	10
Free float (%)	30
Issued capital (m shares @ Rs10)	26.2

7.3m convertible debentures outstanding. Each debenture is convertible into one ordinary share at par on or before 31 March 1995.

1994E Market Share

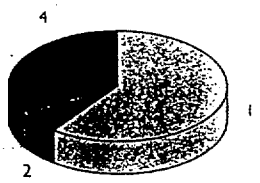

1 Kelani Tyres 60%
2 ACPL 7%
3 Kelani imports 10%
4 Other imports 23%

1994E Direct cost per Unit

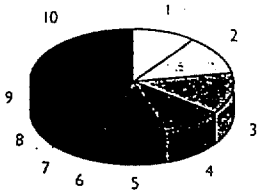

10% Trade discounts 1
12% Turnover, defence and excise tax 2
13% Imported raw material 3
10% Rubber 4
10% Nylon cord 5
6% Labour 6
5% Power 7
6% Production overheads 8
4% Admin overheads 9
24% Profit 10

Earnings Record

Year to 31 March (Rs m)	1992	1993	1994	1995E	1996E
Gross turnover	885	734	913	1,330	1,480
Turnover tax/excise duties/ defence levy	171	174	296	292	340
Net turnover	714	560	617	1,038	1,140
Gross profit	135	49	74	214	286
Land sales/other income	0	0	25	60	30
Operating expenses	45	57	35	32	38
Interest payable/(receivable)	(4)	43	22	25	0
Exceptional items	75	0	0	0	0
Pre-tax profit/(loss)	19	(51)	42	217	278
Transfer from deferred tax	(4)	(23)	0	0	0
Tax charge	0	0	0	0	0
Net profit before ext. items	23	(28)	42	217	278
Extraordinary items	0	0	(23)	0	0
Net profit after ext. items	23	(28)	19	217	278
Turnover growth (%)	20	(5)	22	46	11
Gross margin (%)	19	9	12	21	25
Net margin (%)	3	–	7	16	24
ROE (%)	3	–	1	21	22

Balance Sheet Data

As of 31 March (Rs m)	1991	1992	1993	1994
Fixed assets	779	789	777	821
Intangible assets	0	0	22	24
Net current assets	230	213	141	71
Long-term liabilities	8	240	197	153
Provisions for deferred tax and gratuity	45	59	45	45
Shareholders' funds	955	703	698	718
Long-term debt/equity (%)	1	34	28	21

Commentary

1. Industrial unrest over 1992-94, particularly in the year to March 1994, cost 9 months' production. During the unrest, imports were allowed at concessionary rates and dealers accumulated a stock of 60,000, further pressuring KT's margins.
2. On settlement of the dispute in August 1993 a Rs3.5m one-off payment was made to employees. During the strike period chemicals and raw materials worth Rs9.1m were written off. Margins on imported tyres sold by KT were much lower than on its own tyres. This situation will not recur.
3. Results for the year to March 1994 are unaudited. Details are not yet available.

This document has been prepared and issued by Smith New Court Securities Limited or one of the associated or other companies (together and individually referred to as 'Smith New Court') on the basis of publicly available information, internally developed data and other sources, believed to be reliable. Whilst all reasonable care has been taken to ensure that the facts stated are accurate and the opinions given are fair and reasonable, neither Smith New Court nor any director, officer or employee, shall in any way be responsible for the contents. Smith New Court may trade as a market maker in the investments which are the subject of this document or in related investments and may have acted upon or used the information contained in this document, or the research or analysis on which it is based, before its publication. Smith New Court, its directors, officers or employees may also have a position or be otherwise interested in the investments referred to in this document. This is not an offer to buy or sell the investments referred to in this document. This document is not being issued to nor should it be distributed to persons who are private customers.
Any US person wishing to effect a transaction in any security discussed in this report should do so through Smith New Court Inc. which has distributed this report in the United States.
© 1994 Smith New Court Securities Limited, a member of The Securities and Futures Authority, the London Stock Exchange and the International Securities Market Association. No matter contained in this document may be reproduced or copied by any means without the prior consent of the copyright holder.

51

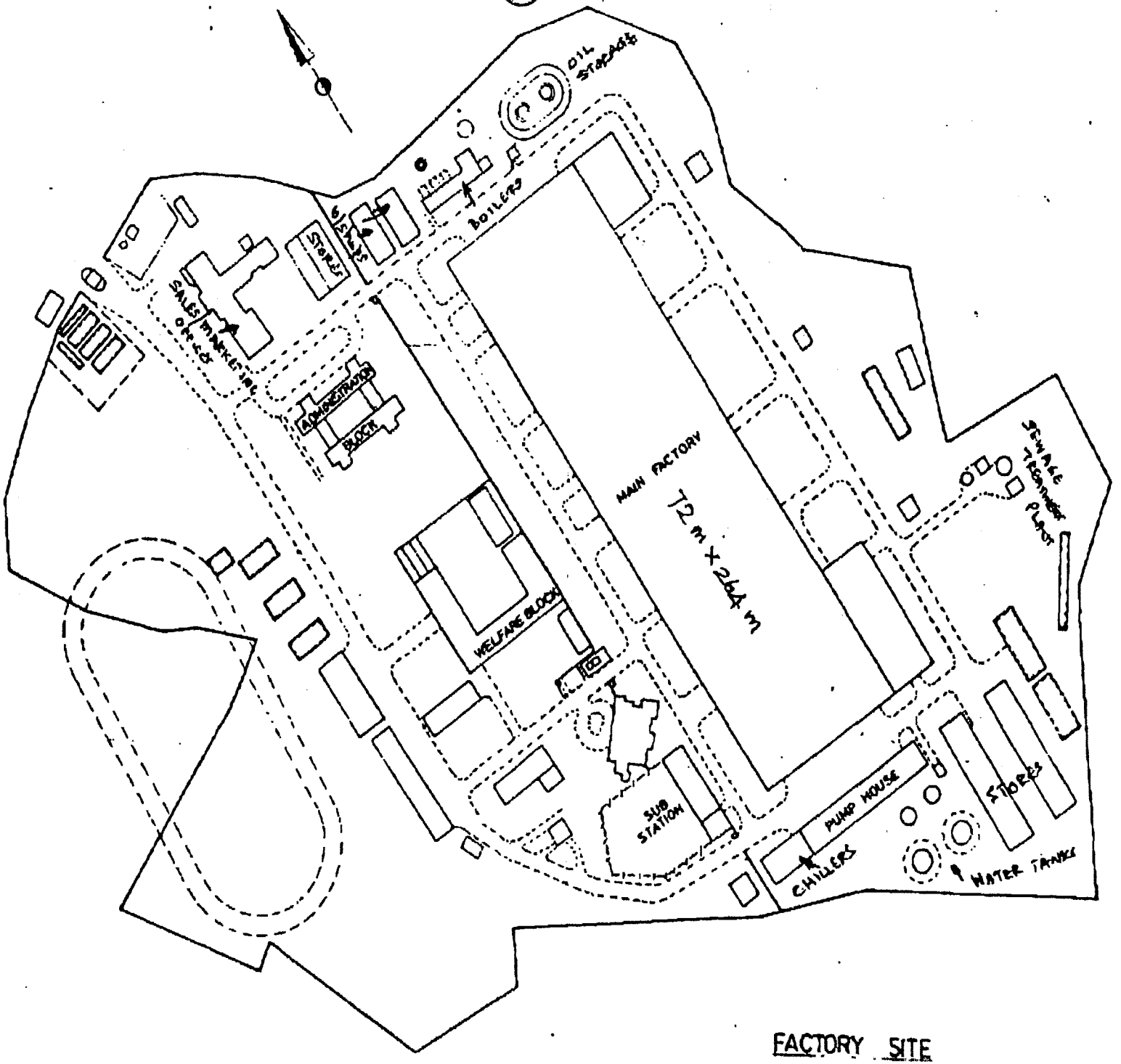

FACTORY SITE

TECHNOLOGICAL PROCESS CHART OF TYRE & TUBE PRODUCTION

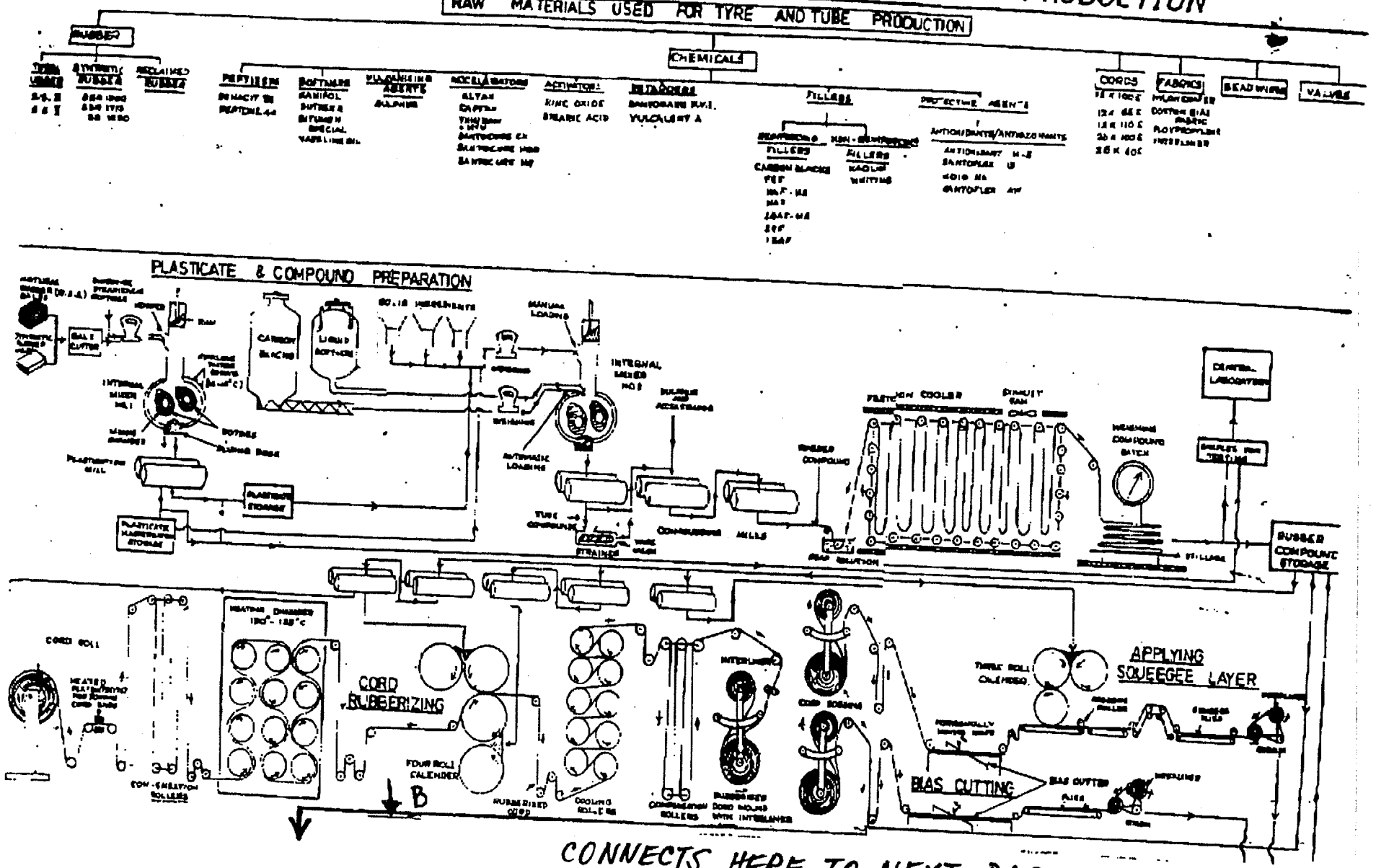

BEST AVAILABLE COPY

CONNECTS HERE TO PREVIOUS PAGE

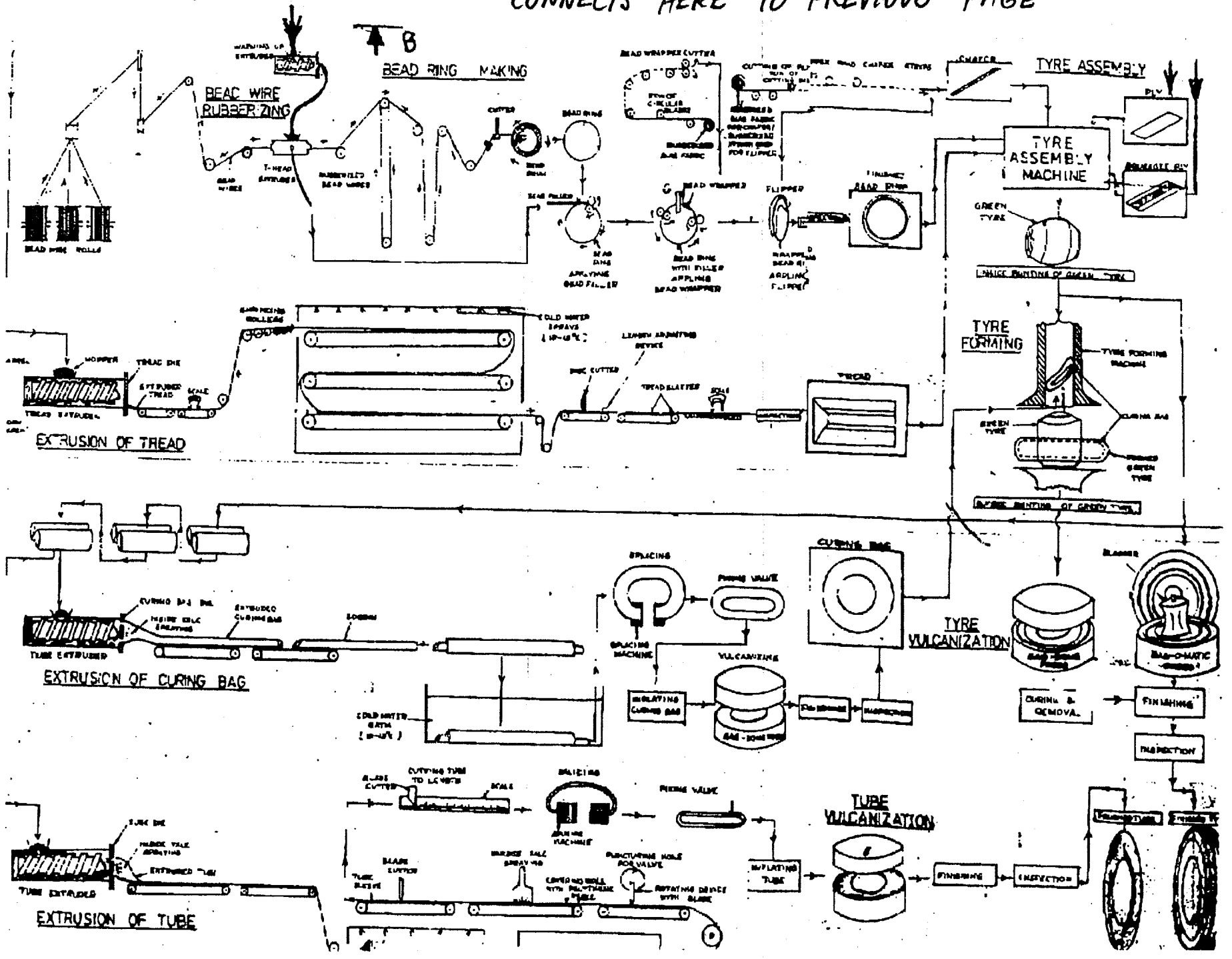

VII. Appendices

Appendix A	Figures and photographs
Appendix B	Itinerary
Appendix C	Persons and organizations visited
Appendix D	Business cards
Appendix E	Documents received
Appendix F	Articles, publications, surveys carried by author
Appendix G	Curriculum vitae
Appendix H	Attachments
Appendix I	Environment-friendly methods of disposing of scrap tires and/or rubber
	Literature references, List of pertinent advertisers

APPENDIX I

Environment-friendly methods of disposing of scrap tires and/or rubber

Tires which cannot be "recycled" by the time-honored process of recapping can be disposed of in an environmentally friendly manner through four general methods:

1. Use the tires in their entirety or in pieces for other purposes, by applying strictly mechanical processes
2. Use tire crumbs in asphalt pavement
3. Reclaim the major chemical ingredients of the tire
4. Recover the heat content of the tire.

Some of these methods, in varying degrees, can be used for other scrap rubber items. For simplicity's sake, the following discussion will be restricted to automotive tires.

Strictly mechanical means

include using pieces of the tire carcass for other articles where its flexibility, durability, abrasion resistance can be utilized, such as in sandal soles, door mats. Only lack of imagination or lack of esthetics restrict such end-uses. Applications falling into this category usually require plenty of manual labor and little capital investment.

In the past few years, tires in their entirety have been used – quite successfully – in undersea applications, such as building artificial reefs for fish habitat or breakwater for shore protection. Little technical know-how is needed. The tires are usually tied together and weighted (pouring concrete into parts of the tire cavity seems to be sufficient), then dumped into the sea. Picking the right location of such undersea structures by marine biologists or engineers is the crucial contributor to the success of such applications.

In the past, fish habitats were "created" by dropping all sorts of scrap metal (including outmoded army tanks) into the sea or by sinking obsolete vessels (including old-fashioned submarines) off the Atlantic coast of Florida. The drawback was that the iron parts rusted away, albeit slowly, in the warm ocean water. Reefs generated with rubber tires will last at least as long as the lifetime of the material tying them together. Thus, steel cables are not recommended; instead, polymeric ropes (e.g., nylon) should be used.

Most of the expense will be incurred by the transportation of the tires from the current dump to the ocean site. Plenty of manual labor is involved in tying the tires together and pouring concrete into their cavities to create negative buoyancy. The only "expensive" material involved is the rope that secures the tires into a bundle and to the weighted tires.

Mixing into asphalt pavement

seems to be an excellent and relatively inexpensive means of using up scrap tire. First, the metallic beads have to be removed but the rest of the tire can be used in standard asphalt hot-mix machinery. The tire carcass has to be shredded into "crumbs," the size of which may vary with the application and the amount (percentage) used in the standard hot-mix. This method of "tire disposal" is widely used on the North-American Continent and seems to provide a more resilient, more durable road surface than the standard asphalt mix. There has been plenty of literature and case histories published on this method.

Whether this method of tire disposal is economically viable in Sri Lanka will depend on the availability of road paving machinery and on the constant need to resurface the roads. I have no information on the life cycle of roads in a climate where freezing never occurs but where trucks could be severely overloaded. Except for the removal of the beads (which can be either manual or mechanical), additional manual labor is restricted to removing the tires from the dump site to the shredder, and from the shredder to the asphalt "factory." The shredder itself entails substantial capital investment but one shredder can supply several asphalt factories with rubber crumbs. Due to their climate, I would not consider *cryogenic* shredding as a viable method for Sri Lanka.

The major chemical ingredients

of a tire are the elastomer(s), carbon black and process oils. Of these, low grade carbon black and oils of various viscosity can be relatively easily reclaimed *via* thermal "cracking" which takes place under conditions (temperatures and pressures) which preclude actual combustion of the rubber. Carbon black is recovered as soot from the off-gases while the oils are distilled off at the head of the column. The long elastomeric chain is usually split into shorter organic fragments which can be reused in synthesizing various organic compounds. The tar-like residue left after the valuable, low-molecular weight ingredients have been recovered could be used as a component for asphalt production.

The technology of cracking is very complicated, requires substantial know-how, highly trained operating personnel and extensive capital investment. An existing oil refinery would have equipment similar to those needed for this type of rubber "recycling." I assume that Sri Lanka imports crude oil which is then refined on the island. However, I doubt that it would have excessive (i.e., idle) capacity which could be devoted to the partial recovery of rubber ingredients.

Literature References, List of Pertinent Advertisers

Literature References

1. Scrap tires: management and economics by: Neil N. Eldin, et al.
Journal of Environmental Engineering, vol. 119, no. 6, Nov-Dec. 1993, p.1217-1232

2. Ground rubber tire/thermoplastic composites: effect of different ground rubber tires by: P. Rajalingam, et al.
Rubber Chemistry and Technology, vol. 66, no. 4, Sep-Oct. 1993, p. 664-677

3. Recycling discarded tires in Taiwan by: Gordon C. C. Yang
Resources, Conservation and Recycling, vol, 9, no. 3, Oct. 1933, p. 191-199

4. Proceedings of the Symposium on a Critical Look at the Use of Waste Materials in Hot-Mix Asphalt
ASTM Special Technical Publication no. 1193, 1993, 306 pages

5. Current nationwide status of the use of waste materials in hot mix asphalt mixtures and pavements by: Stanley Ciesielski, et al.
ASTM Special Technical Publication no. 1193, 1993, p. 17-36 (from "Proceedings of the Symposium on a Critical Look at the Use of Waste Materials in Hot-Mix Asphalt")

6. Recycled tire rubber as an asphalt modifier by: Scott Shuler, et al.
ASTM Special Technical Publication no. 1193, 1993, p. 39-68 (from "Proceedings of the Symposium on a Critical Look at the Use of Waste Materials in Hot-Mix Asphalt")

7. Use and recycling of waste tire rubber hot mix... by: Vince Aurilio, et al.
ASTM Special Technical Publication no. 1193, 1993, p. 84-113 (from "Proceedings of the Symposium on a Critical Look at the Use of Waste Materials in Hot-Mix Asphalt")

8. Utilization of scrap tires in flexible pavements – review of existing technology by: Serji N. Amirkhanian
ASTM Special Technical Publication no. 1103, 1993, p. 233-250 (from "Proceedings of the Symposium on a Critical Look at the Use of Waste Materials in Hot-Mix Asphalt")

9. Maryland county recycles on all fronts anonymous
BioCycle, vol. 34, no. 4, Apr. 1993, p. 34-35

10. Florida's initial experience utilizing ground tire rubber in asphalt concrete mixes by: G.C. Page
Asphalt Paving Technology: Proceedings vol. 61, 1992, p. 446-472

11. Coprocessing of hydrocarbonacous waste and residual oil – a novel approach to recycling by: N. E. Anderson, et al.
Preprints – Divison of Petroleum Chemistry, Amer. Chem. Soc., vol. 38, no. 2, March 1993, p. 335-338

12. Blended fuel program to recycle seed corn and tire derived fuel on coal fired steam generators by: Patrick A. Costello
American Society of Mechanical Engineers, 92-JPGC-FACT-10, p. 1-4

13. Proceedings of the 1992 National Waste Processing Conference 1992 (publ. by ASME), 477 pages

14. Cryogenic processing and recycling by: Jerry J. Leyden
Rubber World, vol. 203, no. 6, March 1991, p. 28-29

15. Recycling rubber products sensibly by: Edward M. Fesus, et al.
Rubber World, vol. 203, no. 6, March 1991, p. 23-26

16. Recycling, production and use of recycled rubbers by: Wm. Klingensmith
Rubber World, vol. 203, no. 6, March 1991, p. 16-31

17. Incentives for solving the scrap tire problem through existing markets by: Haynes C. Goddard
Journal of Hazardous Materials, vol. 29, no. 2, Jan. 1992, p. 165-177

NOTE!

In a pamphlet presenting Clemson University's *1995 Tire Industry Conference for the Domestic & International Tire Industry • Suppliers • Allied Industries* I found one of the presenters, Mary B. Sikora, described as "Publisher of *Scrap Tire News* and is a Principal of the Recycling Research Institute in Suffield, CT. She is the author of *Tire Recovery and Disposal: A National Problem with New Solutions* and has conducted both national and regional seminars devoted to sxcrap tire issues. She ... was former Editor of *Waste Age* magazine".

To trace Ms. Sikora, I suggest contacting Kay James at Clemson's Office of Professional Development: phone (802) 656-2200.