PN-ABY-972

91300

OPPORTUNITIES FOR JORDANIAN TABLE GRAPE PRODUCTION FOR EXPORT WITH FARMING RECOMMENDATIONS

OPPORTUNITIES FOR JORDANIAN TABLE GRAPE PRODUCTION FOR EXPORT
WITH FARMING RECOMMENDATIONS

Prepared for

Agricultural Marketing Development Project

Amman, Jordan

At the request of
Sigma One Corporation
Raleigh-Durham, North Carolina

Under contract to the
US Agency for International Development

Prepared by:

James N. Surabian

August 1994

EXECUTIVE SUMMARY

Grapes from the Jordan Valley hark back to Biblical times. Many Jordanian households have one or more grape plants in their yard. Interest in table grapes for export from Jordan was first initiated by Superior Farms of California along with an Italian company when they introduced various seedless varieties to Jordan in 1981. This study assesses the characteristics of the various actual and potential grape growing regions.

According to Table 3, potential grape harvest in Jordan can supply continuous and consistent quality grapes from late April and through December. A variety of colors are possible. Grape harvest progresses from Safi, Middle Ghor, North Ghor, Rum and Mudawara, the Queen Alia International Airport area, Mafraq, Azraq, the Northern Hills and Shoubak.

Collaboration between grape growers, the Exporter's Association and Government Agricultural Officials is required for a successful expansion of Jordan's table grape industry.

TABLE OF CONTENTS

Page No.

Executive Summary

Introduction 1
- A. Background to the Study 1
- B. Objective of the Study 1
- C. Approach to the Study 1
- D. Arrangement of the Report 2

I. Regional study for expanding Jordanian table grape production for export 3
- A. Water, Climate, Soil 3
  - Table 1: Typical monthly and daily water requirements 4
  - Climate 4
  - Table 2: Average water consumption for different crops in Jordan Valley 5
  - Soil 6
- B. Regions 7
  - South Ghor (Safi) 7
  - Figure 1: California with Salton Sea 8
  - Figure 2: Coachella Valley, California 9
  - Middle Ghor 10
  - North Ghor 12
  - Rum and Mudawara 13
  - Airport Area 14
  - Northwest Desert (Mafraq and Azraq) 15
  - Northern Hills (Ajloun and Irbid) 16
  - Shoubak 17
  - Table 3: Projected Regional Harvests of Varieties 19
  - Map of Jordan 20

II. Farming Recommendations 21
- Glossary 21
- A. Planting, Training, Trellis 21
  - 1. Cuttings 21
  - 2. Rootings 21
  - Table 4: The effect on production by planting and training 22
  - Trellis systems 22
  - Figure 3: T-Type trellis system 23
  - Figure 4: Cane pruned vine 24
  - Figure 5: Single cordon spur pruned vine 25
  - Figure 6: Double cordon spur pruned vine 26
- B. Hydrogen Cyanimide (Dormex) and dormancy 27

TABLE OF CONTENTS (Continued)

	Page No.
Figure 7: Dormex	28
Figure 8: Dormex-Safe Handling Guide	29
C. Fertilization	31
D. Fungicide Program	32
E. Spray Application	32
Table 5: Boost your spray results	33
Figure 9: Spread Sticker	35
F. Ethephon (Ethrel)	36
G. Crown Suckering	36
H. Girdling	36
Figure 10: Ethrel	37
Critical Points of Girdling	38
Figure 11: A cross section of a grape vine trunk	39
I. Seedless Grape Farming	40
Perlette	40
Thompson	41
Superior	41
Flame	42
Ruby	43
J. Newer Seedless Varieties	43
1. Black Chilean	43
Beauty	43
Fantasy	43
Black Maroo	44
2. Crimson	44
3. Seedless Muscat	44
K. Red Globe and other seeded varieties	44
Emperor	44
Exotic	44
Red Globe	45
L. Harvesting, Packaging and Storage	46
Harvesting	46
Packaging	46
Weight	46
Packing and Cold Storage	46
Sulfur Dioxide	47
M. Recommended Literature	47
Figure 12: Sequence of Packing grapes	49
III. Appendix	50

TABLE OF CONTENTS (Continued)

		Page No.
IV.	Literature Cited	51
V.	Acknowledgedments	52
VI.	Jordanians Interested in Grape Production	53

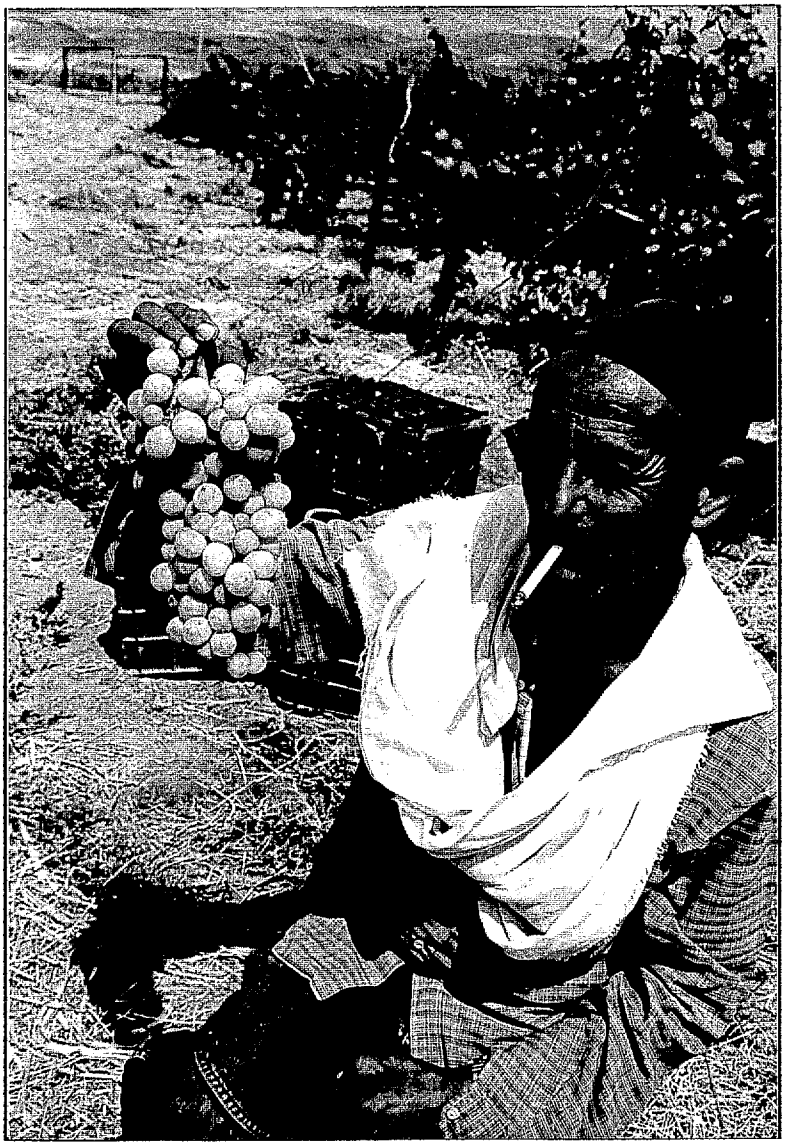

The Egyptian Field Manager proudly displays Early White Superior seedless grapes at the Abu Ghazaleh Farm during the 1993 harvest. Photo courtesy of Richard J. Peters, Senior Technical Representative, Sigma One Corporation

INTRODUCTION

A. Background to the study

Grape production in Jordan can be found throughout the cultivated areas of the country. Most of the production is from traditional varieties that are consumed on the domestic market. As early as 1981, a California company collaborating with an Italian firm, introduced seedless grapes to the Jordan Valley in the interest of supplying grapes to the European market. This early venture was abandoned by the California and Italian companies, but the introduced varieties were multiplied by Jordanian entities. In 1991 a study for the Agricultural Marketing Development Project (AMDP) identified seedless grapes as a potential high value crop for the European market. Today, there are several small producers of seedless grapes in the Jordan valley. In addition there is some commercial production for export coming from the RUM area.

Because of the initial success of the current producers, there is a growing interest in expansion of the seedless grape production industry in Jordan, and particularly in the Jordan Valley both north and south of the Dead Sea.

B. Objectives of the study

1. Recommendations on varieties best suited for various parts of Jordan as determined by the Jordanian Ministry of Agriculture's reasearch as well as by available information on the latest varieties recommended for Jordan.

2. A list of interested Jordanian producers;

3. At least one or more field demonstrations-assuming that a current grape producer is willing-of correct types of grape culture. One Amman presentation of the findings under the sponsorship of the Exporter's Association with a fee charged to those interested in attending.

C. Approach to the study

Mr. Jim Surabian, a seedless grape farmer from the Coachella Valley of California, agreed to come to Jordan to examine the potential for table grape expansion. He was accompanied in his field observations by Mr. Mohamed Fara', Director of Post Harvest Technology in the Agricultural Marketing Organization, and by Fakhri Nustas, Project Administrator, Sigma One Corporation. This report was written by Mr.Surabian with the assistance of Richard J. Peters, Senior Technical Representative, Sigma One Corporation.

Mr. Surabian spent approximately six weeks in Jordan to gather information and to write

his report. He visited all of the actual and potential grape production areas of Jordan. He conducted a field seminar at the JOVAC farm, and he presented his final report to a group of interested Jordanians at the Mariott Hotel.

D. Arrangement of the report

The first chapter describes the water requirements for producing export quality grapes; describes the climatic conditions prevailing in various regions of Jordan, and discusses the requirements for grape production. Finally, this chapter describes the soil conditions of the various regions and which types of soil best support grape production. The first chapter also pictures each region of Jordan where grapes are or can be produced. Both seedless and seeded varieties are mentioned for each of the regions, and timing for harvest is estimated.

The second chapter provides farming recommendations deemed necessary to obtain top quality table grape production in Jordan. Along with a glossary of terms used in the text, cultural practices such as planting, training and trellis recommendations are made. This chapter also discusses the use of hydrogen cyanamide to obtain early emergence of buds. Some discussion of fertilization, fungicide programs, spraying applications, use of Ethephon (for obtaining color in Flames), crown suckering, and girdling. This chapter then provides a brief discussion of cultural practices specific to both seedless and seeded grapes. Finally, harvesting, packaging and cold storage are mentioned.

In the appendix, recommendations are made about follow-up to this study in order to facilitate expansion of the table grape industry in Jordan.

I. Regional study for expanding Jordanian table grape production for export.

Vineyard establishment and expansion cannot be considered without discussing water availability, climate by altitude, and soil types. They are the main ingredients of determining where a vine can grow and equally important; the variety of the grapes and harvest period for that region.

A. Water, climate, soil

Water: It is clear that any region that relies solely on rainfall for irrigation cannot grow quality seedless grapes:

1 mm of rain = only 0.72 liter per vine!

This is the case even if their climates are milder in the summer than the Jordan Valley.

All grapes discussed in this report should be planted with a drip irrigation system. The drip system was developed in the Middle East so this technology is available to any farmer in Jordan. These are common characteristics that are popular in both California and Jordan -

Emitters: in-line or plug-in (for any spacing or additions)
pressure compensated
self-cleaning
8 liters per hour
2 emitters per vine spaced about 30 cm to each side

Hose: usually one line per row. Hose and emitter should be made of the compound of plastic that can be cleaned by running any type of acid through the lines.

Table 1 shows general water requirements representing a typical growing season for a single desert seedless grapevine in California. This will probably be the maximum range of irrigation for the hottest climates in Jordan if they want to produce the quality early export markets require. (Note: the California deserts are much dryer than Jordan, humidity far below 50%.) April use is relatively high because this is size girdling time for some varieties. If no girdle is applied, this period will have less water use. The data listed for May, June, July represents the range of pre-harvest and harvest demands that vary for each variety. Girdling, pre-harvest, and harvest demand large amounts of water to pump up the berry size. Water use commonly exceeds evaporation during this period in order to keep a vine cool, and a large crop from collapsing during these hot months. (Collapse refers to the condition when many bunches turn into gray or brown water-berries during a heat snap.) A reduction of these volumes of irrigation can be helped by cover crops between rows. They help water penetration and reduce evaporation.

Table 1:				Typical monthly and daily irrigation requirements in liters for a single seedless grapevine in California*								
Jan	Feb	Mar	Apr	May	Jun	Jul	Aug	Sep	Oct	Nov	Dec	Ave
246	300	909	1750	1728 - 2428 per plant			1728	927	832	560	0	12436 - 14536
8	10	30	58	58 - 81 per plant			58	31	28	19	0	Ave. daily liters
				P &S								Var. Harv. Per.
					F							
						T						

*Average of 148 vines per dunnum in California.

Using the data from table 1:

12,436-14,536 Liters per vine converts to 1,840,528-2,151,328 Lt./dm. (for 148 vines/dm. in California) or 34040 Lt./vine per day average, while data from table 2 shows: 642,000 - 915,000 Lt./dm. (for 180-230 vines/dm. in the Ghor) or 8 - 14 Lt./vine per day average.

These California figures are considerably higher because the grape crop they are based on is higher than a Jordanian vineyard. As Jordanian farming practices grow larger seedless grape crops these California figures are what it is going to take to grow high quality grapes for the early export market. You cannot accomplish that by irrigating an average of 8 - 14 Lt./vine per day.

Climate: Weather records show that from the highest to lowest altitude farmlands, summer highs can range from 37-48 C. If water supply is sufficient, these temperatures are not a problem for seedless grapes. In fact, if there is a normal seasonal rise to this maximum range - that type of hot weather is conducive to fast ripening and early harvests. Any type of heat snap causing an enormous immediate temperature rise to 35 C+ is of course potentially damaging to any type of crop. Humidity generally falls in the range of 40-60%.

The minimum temperatures are the most critical portion of regional climates. Any duration near or below 0 C is potentially damaging to the green growth of a grapevine. Brief exposures at those temperatures do not cause serious damage. In sustained frost conditions, the amount of damage will vary within different ranges of humidity (low or high dew point). Because of the Mediterranean Sea, humidity never averages below 40%.

The earliest areas of bud break will have green growth on the vines by January if they are sprayed with Dormex in early December. These areas will be the vineyards near and below Sea

Table 2:	AVERAGE WATER CONSUMPTION FOR DIFFERENT CROPS IN THE JORDAN VALLEY AND THE SOUTH GHOR		
CROP	ANNUAL WATER CONSUMPTION		
Liters per Dunnum	N.J.V.	M&S.J.V.	Safi
CITRUS	876000	991000	1236000
BANANA	1686000	1825000	2353000
GRAPE	642000	881000	915000
WHEAT	323000	437000	454000
BARLEY	323000	437000	454000
TOMATO	468000	530000	671000
SQUASH	424000	468000	580000
EGGPLANT	664000	754000	931000
CUCUMBER	424000	468000	580000
POTATO	318000	421000	496000
BEANS	321000	373000	392000
WATER MELON	508000	584000	707000
CAPSICUM	682000	754000	931000

SOURCE: International Studies Center, Royal Scientific Society/ Irrigation water in the Jordan Valley: The possibility of planting alternative crop.

Level in the North, Middle, and South Ghor (Safi). Weather records show that they rarely go below 5 C during December through February usually averaging 9 - 11 C. Combined with having the highest temperatures in Jordan makes these proven areas along with Safi's potential the best seedless growing regions.

The farms in highlands just east of the Middle Ghor and the Dead Sea, the northeastern desert below Syria, and the southern deserts from Shoubak down to Saudi Arabia, can all experience freezes from 0 to -5 C. New green growth of a vine can withstand only a brief duration (around 1 hour) of this low temperature range. So a highland region that routinely experiences long durations of 0 to -5 C cannot plant early seedless grapes. The area defined by the triangle formed by Shoubak, Jafr, and Qurein historically have 10-20 days with minimum temperatures less than and equal to 0 C. This area grows local seeded varieties along with just a few hectares of Superior that are 3 years old and less. Farmers do not report any frost problems, but the risk exists, especially when rare frosts can occur as late as the beginning of April.

The general north-western winds of summer can be up to 50 km per hour while the winter southwestern-westerly winds can be as high as 56 km per hour. The dust-storms during the summer in the Ghor and Desert Regions can last 25-60 days a year. Generally the particle size is

rarely larger than dust in size. It is sand particle size that can scar grapes in high wind areas. The more common dangers are:

1. Abrasion from the shoots and leaves striking the berries during continuous winds, and

2. Scorching winds burning and indenting the skin of maturing fruit during a hot summer afternoon.

Soil: There are examples of healthy grapevines growing in virtually every type of soil in Jordan. Obviously there are some soils that are more desirable than others to support a mature vine with a full load of ripe grapes. It is difficult to generalize when discussing soils. But it is also important in this study not to go deeply into the highly descriptive science of soils, and just talk about the major factors from a farming standpoint.

Particular soil characteristics will be discussed in the specific vineyard regions. But generally speaking about Jordanian farm soils:

1. Permeability in the sandy soils is good to excellent. Even the high clay content reddish-brown iron stained soils on the mountain tops of Ajloun and Irbid have fair to good permeability.

2. Each region has significant areas of thin soils over marl layers (calcareous silts and clays with high $CaCO3$ content). Permeability and leaching are difficult there along with nutrient and fertilizer availability. Cultivation over the root zone and applications of various acids in the irrigation water will have to be further researched and developed to improve these areas.

3. Salt and alkalinity are manageable. That is, even in the heavier texture soils with some alkali problem indicated by high exchangeable sodium, in most cases available calcium content is correspondingly high. The permeability of these soils permits salinity problem, aided by leaching irrigations, to bring the ec (electroconductivity) down to the desirable range of less than 2.0 for a vineyard.

4. The predominantly medium to light sandy loams from North to South Ghor are unusually bio-rich for this soil type and exhibit good water holding capability.

5. The deserts surrounding the bases of mountain rages in the Rum and Mudawara region have fine particle red sand but support farming with normal fertilization.

6. The northeastern desert below Syria that contains the Mafraq and Azraq region exhibits a surprising spectrum of soil types from silty loam to sandy loam, enrichened by the huge stretches of eroding lava beds.

B. Regions

South Ghor (Safi)

The region immediately surrounding the south end of the Dead Sea is known as Safi. What is interesting about Safi is the striking similarity to the Coachella Valley, California, by the Salton Sea. (figures 1 and 2). This inland salt water sea is approximately 48 km long and 12 km wide and identical to the Dead Sea in surroundings. The Salton Sea is slightly below sea level while Safi is -300 to -350 m. The climate and soil yields the earliest, finest quality Flame seedless grapes in the United States. Therefore the potential is enormous for Safi to become a major producer of quality seedless grapes for the earliest export market. The first seedless grape harvesting in Jordan would start here possibly as early as the last week in April.

At the farm of the Honorable Sharif Zeid Bin Shakir, there are 80 healthy Superior vines that have been naturally grown with no fertilizer or cultural work. This illustrates how the basic fertility of the light sandy soil is already adequate. Irrigation would have to be substantial enough to keep salts leached down, which should be easy in this kind of permeability. The salinity in some areas can rise to an ec of 200. This is probably due to the water table of the sea constantly forcing salt precipitation upward in the soil profile. Obviously, any attempt of leaching in those soils is futile at this point. To reclaim soils of those salinity levels, a massive drainage system would have to be engineered. So any area of Safi near the Dead Sea with soil salinity that can be maintained at an ec of 2.0 or less, will be suitable for grapes. Local farmers report that their allocation of water is abundant enough for the bananas grown there, which exceeds grapes in water requirements.

Winter temperatures do not go below 5 C, so freezes are nonexistent. In fact, Safi averages the highest minimum temperatures in all of Jordan. This permits Dormex sprays on all vines planted in Safi without the threat of a late spring frost. This would assure the early emergence necessary for the early harvest. Summer maximum temperatures are slightly higher than Middle Ghor with average maximum ranges of 30-40 C in April to October. Absolute maximum can reach 48 C. So here like Middle Ghor and Northern Ghor, October should really be considered part of summer.

Because of this warm climate, coloring of the Flame seedless will have to be forced with one or two applications of Ethrel. This operation is successfully and safely accomplished year after year by the Salton Sea and should have the same results by the Dead Sea. Without Ethrel, Flames cannot be grown in Safi with high quality color. Ruby and Crimson seedless could also need some help with Ethrel. Planting them in slightly higher elevation soil to the east of the sea would spread the harvest a little later. The harvest schedule of Safi could possible be:

Perlettes	**- start of last week in April through May**
Superiors	**- end of last week in April to start of June**
Flames	**- first of May to middle of June**
Thompson and Black Chilean	**- end of May to through 3rd week of June**
Ruby	**- start of July to early August**
Crimson	**- first week of September**

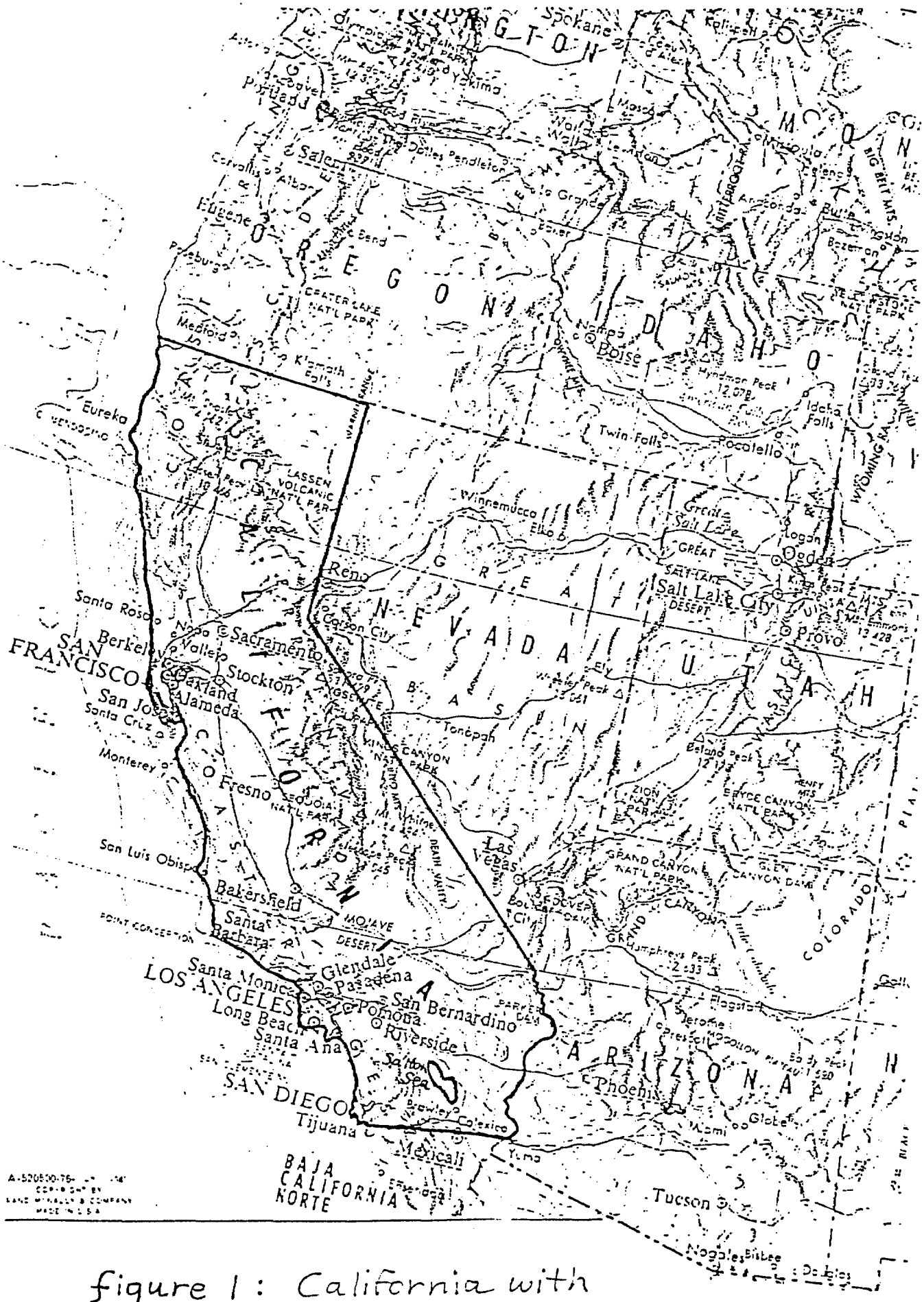

figure 1: California with the Salton Sea near

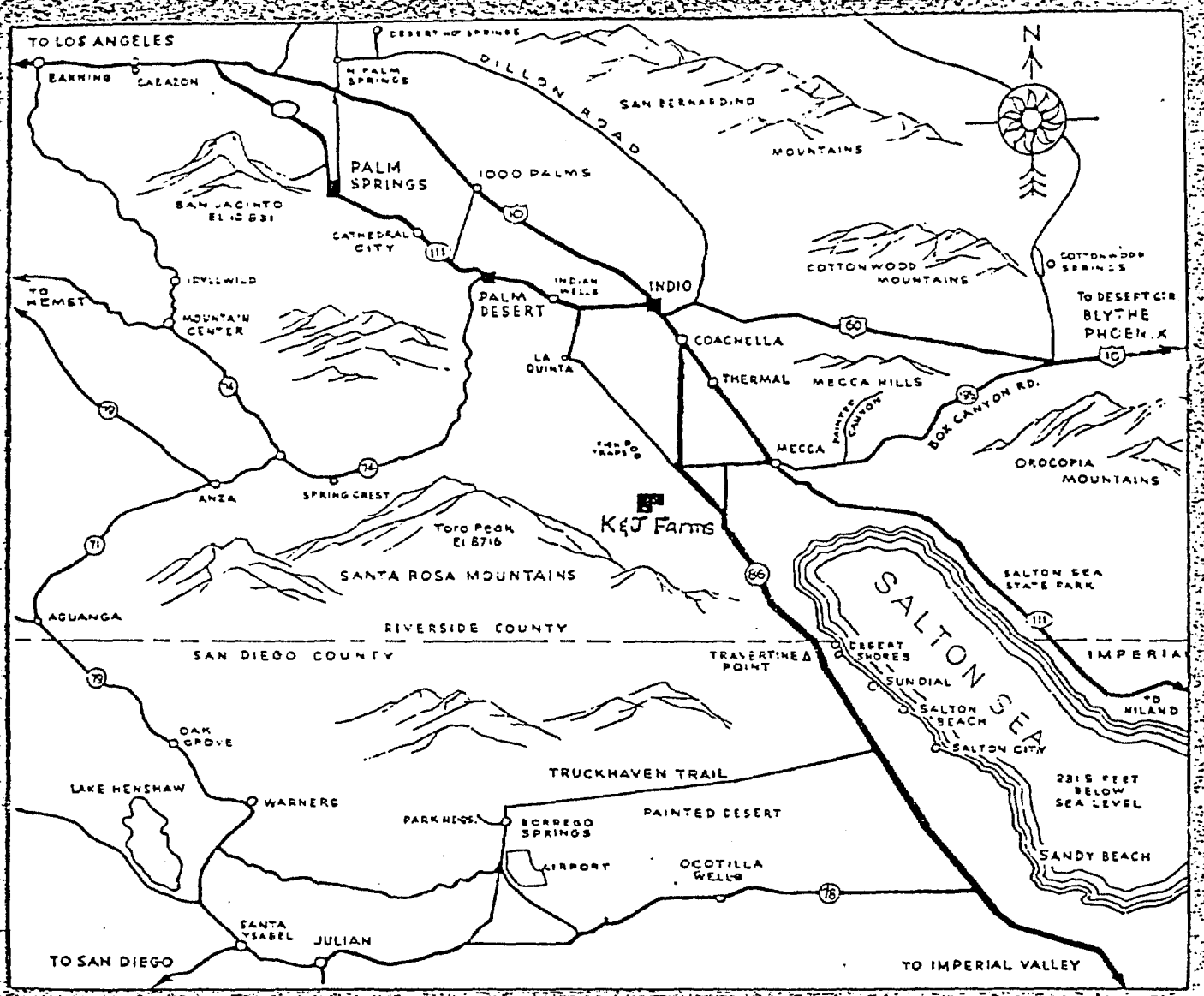

figure 2

Coachella Valley, California

Middle Ghor

Middle Ghor or the Middle Jordan Valley is described as the area occupying the rift valley between the north end of the Dead Sea and the Zarqa River. The first of Jordan's 2800 hectares of table grapes currently begins harvest here.

To get to the Ghor from the west, you have to drop down approximately 500 m from the steep mountains that define the east side of the Jordan Valley. The prime farmland is below the rough and broken base of these mountains. The vineyards of Middle Ghor are located on the smooth and gentle slopes that head west into the Jordan River to -200 m and south to the Dead Sea at -300 m.

The soils of the Middle Ghor are generally described as grayish-brown clay loams to sandy loams. The vineyards and agricultural stations I visited between Deir Alla and Arda were sandy loams. The permeability is generally good and allows management of any salinity by moderate to low amounts of leaching. Depth of the soil varies here because it lies on top of marl deposits. These calcareous layers crop out in spots causing difficulties for the vines. A large variety of crops are grown in this soil. It is surprisingly fertile and provides adequate water holding capacity for all of them.

All the irrigation water is provided by the canals and pipes of the Jordan Valley Authority. It originates from dammed areas like the Yarmouk River. Farmers receive their allocations in reservoirs, often shared between farms. The water supply has been adequate for the current style of seedless grape farming. Recommendations in this study could increase the water demand for seedless grape farming here possibly 25% because of larger yield. The heat of the summer lasts from April to October with average maximum temperatures of 29-39 C. Absolute maximum temperatures can commonly reach 48 C in July. It hardly ever approaches freezing with minimum temperatures averaging 11-17 C in the winter. This lack of dormancy has made poor bud break a very common occurrence in Middle and North Ghor. Farmers report as many as 33% of the buds never opening and causing a severe reduction in fruitfulness. So Dormex should be used on all seedless grapes in the Ghor to assure complete and uniform bud break.

These Dormex treatments would allow the harvest start to move from the second week in May to the last week in April. So based on current harvest information from JOVAC Farms and the Farm of the Honorable Samir Kawar, these could be the earlier dates for varieties treated with Dormex:

Perlette	**- May 1-31**
Superior	**- May 10 through June 5**
Flame	**- May 10 to mid June**
Thompson and Black Chilean	**- month of June**
No Dormex treatment:	
Crimson	**- end of first week in September to ?**

Middle Ghor will be 7-10 days behind South Ghor (Safi) when it is planted. The profit in Middle Ghor vineyards would be in early seedless grapes for the early export market (before May

25) and a continual supply of all colors of seedless grapes through the summer.

Like Safi, this extremely warm climate will probably make it necessary to use Ethrel to aid in complete coloring of the Flame and Crimson.

North Ghor

North Ghor or the North Jordan Valley is described as the area north of the Yarqa River up to the Yarmouk River on the Syrian-Jordan border. It is the northern continuation of the rift valley and shares the same mountain range as Middle Ghor for its east side.

Its elevation is slightly higher than Middle Ghor in the range of -200 to -170 m. So it has very slightly lower temperatures than Middle Ghor. Average maximum temperatures are 28-38 C with the absolute maximum up to 46 C in July. It rarely dips below 0 C with a minimum average range of 9-13 C in the winter. So this too will be an area that can use Dormex on all its seedless vines to shift the season earlier.

The soil is the slightly higher strata of their common soil series. It is generally described as reddish-brown from more iron and clay than the lower strata that forms the Middle Ghor soil. It is generally permeable and free of serious salinity problems. The irrigation water is also provided by the Jordan Valley Authority; much of it going to the huge amount of bananas planted in Shounah. Huge early seedless crops will still use less water than bananas, so they would actually represent a relative savings of irrigation water in North Ghor.

I visited agricultural stations throughout North Ghor:

Riyan Station - where Wadi Al Yabis empties into Jordan River
Jeram Station - in the town of Mashara.
Baqura Station - the oldest and northernmost station in Jordan established in 1933

These are the major nurseries and suppliers of grafted rootings for Jordan. All ancient and current varieties are being maintained and provided for farmers at these locations. The Riyan Station contains the mother vines for Halawani, Ajlouni, Perlette, Superior, and Syri Balodi (a very late Syrian variety for highlands).

The Superior and Perlette are harvested at these stations about one week behind the Middle Ghor. So varieties treated with Dormex will possibly harvest:

Perlette	**- May 7-June 7**
Superior	**- middle of May to end of June**
Flame	**- end of May to end of June**
Thompson and Black Chilean	**- late June to early July**
No Dormex treatment:	
Crimson	**- mid September to ?**

North Ghor is aiming for the early export market along with Middle and South Ghor. Like Middle and South Ghor, this warm climate will make it necessary to use Ethrel to aid in complete coloring of the Flames.

Rum and Mudawara

The fine red sandy soil of these two areas lap up against the pediments of the distinctive monument mountains of Rum. There is enough clay in this soil to give it good water retention and medium to deep soils to establish strong vines.

It can become very cool in the winter months of December through March. Mudawara occasionally dips below 0 C, while Rum usually stays over 0 C. Local farmers report that frost damage does not occur. Under these conditions, it would be safe and an advantage to use Dormex to aid in bud break and make the harvests earlier. The maximum heat of the summer months can range between 30-40 C so harvest is rapid for seedless varieties here also.

Water for irrigation is from private wells producing up to 9000 liters per minute from the 500 m level of the Disi Pool (the Arabian aquifer). Supplies like this are adequate to sustain vineyards. There are restrictions on drilling new wells in this area, but there seems to be some flexibility in the laws that the farmers are working around. There is a wide variety of row crops grown here. The large farms irrigate with huge center-pivot sprinkler systems.

There are about 50 hectares of strong Perlette, Thompson, Flame, and Red Globe vines being grown in Rum for the past four to five years. Mudawara has a few hectares of very healthy Superior vines of age three years and less. This region harvests Perlettes starting June 20, Thompson and Flames July 1, with Red Globe the end of July to October. It would be advantageous to apply Dormex to the early seedless varieties to move into the better early export market. Red Globe is harvested in Rum from the end of July to beginning of October.

Because the supply of Red Globe is intermittent while waiting for all bunches to color, plantings of Ruby and Crimson could help production continuity. That is, after the early seedless are finished, a farmer could be supplying his buyers with Crimson from August through October along with the Red Globe as it is ready in September to October. Emperor in early September to the beginning of October could further augment this supply. So the harvest schedule could eventually look like:

(Dormex treated)	
Perlette	**- beginning of second week in June to end of June**
Superior	**- beginning of third week in June to end of June**
Flame, Thompson, Black Chilean	**- end of June to mid July**
(no Dormex)	
Crimson	**-September**
Red Globe	**- end of July to October**
Emperor	**- early September to mid November**

Airport Area

I had the pleasure of being given a tour of Qaser Al Mashta Farms, owned by Her Royal Highness Princess Besma. It is a beautiful modern farm of 1700 dunnum started in 1993 and located one kilometer northeast of Queen Alia Airport at about the same elevation of 700 m. The largest product is olives followed by vegetables and other tree fruits of peaches, nectarines, pears, cherries, apricots, and plums.

The soil, water, and weather is a good representation of the farming region just south of Amman and east of the airport. It has a deep medium clay loam with no salt problems from 0 to 60 cm. A few tons of manure (approx. 3) per year is adequate biomatter for all the crops so far. Marl soil is not evident here but it probably crops out in adjacent hillsides to cause the usual problem spots.

Artesian wells from 317-340 m water strata forces the water to 170 m where it is pumped to the surface with submersible pumps. One well averages 100 m3 and the other averages 40 m3 per hour. The water is warm sometimes 31-35 C. The water analysis shows adequate quality for all crops.

Because this region is by the airport, farmers have the great advantage of having its sophisticated weather station as data source to guide their irrigation and variety selection. Very few days per winter drop below 0 C. It usually averages highs of 33-35 C in the summer with maximum highs very rarely hitting 35-42 C. It can be very windy with dust-storms but fine enough particles to not hurt crops so far.

This will not be an early seedless area like the Ghor, but it could be in the middle to late season range. So Dormex treatments as a practice would not be advised unless needed to aid emergence and uniformity. Dormex testing should be tried on half of the trial vines, just to see possible shifting of harvest periods. Qaser Al Mashta is going to plant a full spectrum of seedless grapes along their avenues going north to south and east to west. Hopefully they will try late seeded grapes also.

So this would be an excellent test plot for farms in this area to refer to. A broad estimation of possible harvest periods at this point in time:

Perlette	**- late June**
Superior	**- late June**
Thompson and Black Chilean	**- end of June through July**
Flame	**- end of June through July**
Ruby	**- August to September**
Cardinal	**- August to September**
Exotic	**- August to September**
Red Globe	**- September**
Crimson	**- late September to early October**
Emperor	**- late September to November**

Northeast Desert (Mafraq to Azraq)

The region from Mafraq to Azraq and beyond eastward is geologically part of the Syrian Desert. They share similar soil types and topography in the 750-500 m range, shadowed by the nearby volcanoes of Syria and Jordan border. This broad area displays soils of silty loam to fine sandy loam, both with high clay contents. The numerous eroding lava beds further enrich the soils. These black basaltic lava formations make the roads and adjacent farmlands look identical to parts of Oahu, Hawaii.

The climate is what is usually depicted as desert conditions of the Middle East. That is, contrasts of heat and cold. Capable of being below 0 C and averaging 3-8 C for lows in November through March while maximum temperatures can occasionally hit 24 C and higher in the same months. Summer months of April through August have an average maximum range of 23-33 C with minimum averages of 8-19 C.

The cumulative farming of olives, apples, plums, and vegetables in Mafraq is 18,500 hectares. Local grape variety plantings have increased steadily since 1986-93 from 2600 to 4700 dunums. The Agricultural Department of Mafraq reports they are trying to move to grapes from vegetables and the rest for productivity and price. They stress late varieties of:

Zeni, Salti, Darawishi, and Halawani:	**-harvest is during early August through November, finishing with the Halawanis.**

Irrigation is by wells (over 400) pumping from strata at 300 m and below.

Azraq irrigation is from wells pumped from as shallow as 70 m. Fifty years ago wells could pump from strata only 3 m below the surface. So the 20 million m3 of drinking water that is pumped yearly to Amman from Azraq is lowering the water table. So even though the water strata is gradually being depleted, it appears to have a huge source to keep supplying this volume.

Azraq has mixed plantings of olives and grapes all for local markets. There are 1.5 million olive trees planted. Most grapes are:

Zeni and Halawani	**- harvested end of August to November**
Iranian, Iraqi, Syrian seeded varieties	**- very few planted**

Mafraq and Azraq conditions seem to be best for trying later varieties so no Dormex sprays would be necessary unless needed to aid emergence. So a possible variety trial and harvest schedule might be:

Red Globe	**- September**
Emperor	**- September through late November**
Crimson	**- late September through October**

Some small trial plots of Perlette, Superior, Thompson, and Flame should be planted throughout this region to see how late their harvest would be extended by the climate. Their usual peak of June and early July could shift to a later period which is unknown at this point until some trials are planted.

Northern Hills (Ajloun and Irbid)

It is clear that this hilly region north of Amman and next to Syria, which relies solely on rainfall for irrigation, cannot grow quality seedless grapes. This is true even though their climates are mild and the rainfall is the highest average in all of Jordan with close to 500 mm per year. This is the highest elevation agricultural area in northern Jordan. Both Ajloun and Irbid have highly eroded deep soils in a rocky landscape. But Ajloun is steep and massive while Irbid is gradual and rolling.

Wheat, tobacco, orchards, and the local seeded grape varieties will remain the typical farming. Olives dominate the farmland in both of these areas along with many apple groves in Ajloun. The grapes share the land with these trees, so they will probably be shaded out as the apple and olives mature. Therefore it appears that grape production will decrease here because these are all small farms to begin with. Especially considering the high rock-clearing costs.

If any promoting of expansion occurs in the grapes in this region, it should be with Halawani and Zeni. The rest of the local seeded varieties - Ajlouni, Salti, Darawishy, and Olivette - are harvested during the August through September peak. I was told that the Dabooki is grown with success west of the Jordan River. They say it is very large, very sweet, and very late because it thrives without irrigation. They claim that any water other than the usual rainfall actually decreases these qualities! So this ancient variety needs to be studied more for regions lacking irrigation.

Perhaps a very small trial plot of Red Globe, Emperor, and Black Pearl should be planted in this region to see how they would grow with rain and no girdle. They may accidently color and size over an unusually longer period of time versus the warmer regions. Their roots might do well in the sticky, puffy, red clay soils that dominate the hills.

To increase quality, the enormous mildew problem needs to be addressed aggressively because intense high winds (53 - 66 knot average gusts) spread the spores throughout virtually every vineyard. The west to east winds have made some of the older trees grow almost horizontal in parts of Irbid. Grapes on trellis could experience terrible scarring in these winds.

Needless to say, Dormex is not required in the grape farming practices in this region. So the grape program could look like this in terms of current varieties and a small amount of experimentation:

Halawani and Zeni	**- harvest October and November**
Dabooki	**- trial plot, harvest date unknown**
Red Globe	**- trial plot, possibly harvest month of September**
Black Pearl	**- trial plot, possibly harvest October through December**
Emperor	**- trial plot, possibly October through December**

Shoubak

The hills of Shoubak represent the highest farmland in Jordan at an elevation up to 1400 m. Some immaculate hillside plantings of tree fruit 15 km east of Shoubak showcase a large variety of young dwarf apples, peaches, nectarines, cherries, apricots, and plums. Some farmers are receiving technical assistance from French and Bulgarian apple experts. Because these trees are healthy and growing well it can divert attention from the fact that up to 40 - 60% of the soil can be calcium carbonate, $CaCO3$. This high calcareous clay loam is the same marl deposit that crops out in Ghor soil and causes problems in the vineyards there. Alkalinity is usually 8.2 pH.

This soil type makes grape growing very difficult in Shoubak. Soil permeability is poor and consequently the soil needs more deep cultivation than is possible. Nitrogen, phosphate, potassium, and minor nutrients are locked in the soil causing many spring deficiency problems. Leaf damage caused by boron, zinc, iron, and possibly magnesium and manganese deficiencies are evident even in July. Nitric acid treatments in the drip irrigation seems to work to an extent in the trees as a nitrogen source and soil acidifier to partially release immobile or locked nutrients. It should probably be tried in the grapes because other liquid nitrogen sources have not been very successful.

Shoubak is obviously not a very encouraging area to become a major seedless grape producer. The few dunums of Superior show all the mentioned deficiency problems. Still, there was good berry and bunch size found on a few Superior vines. They are harvested in the middle of July. Prior to this harvest they can be hit by winds averaging 80 km/hr. which can scar, discolor, and polish the berries by making leaves and shoots rub against the bunches. Mildew is readily spread in this wind causing fresh mildew populations to develop even throughout harvesting. All farmers should standardize their fungicide programs to keep spreading mildew back and forth between farms.

Water availability is sufficient but becoming a problem. Level in the wells is dropping. All wells are private artesian types that were originally drilled with permits. No new wells are allowed because of the decreasing water levels. So the only well work that can be done is to deepen a failing hole. Often this can drop into a dry strata and cause a further water loss. If a well fails, the law allows you to drill another.

The grapes harvest here is:

Ruby	**- end of July to early October**
Halawani and Zeni	**- late September through October**
Black Pearl	**- November, as late as December (versus October in California)**

The Ruby and Black Pearl are grown on the farm of Abdel Hashlamon. I must agree with his statement that the Shoubak area needs late seeded grapes that are harvested October and later, grown on drought-resistant rootstocks because of water shortage. (So Dormex treatments would not be advisable in this area.) He is experimenting with Bulgarian rootstocks in the worst possible calcareous soils on his farm to see if this idea will work. Black Pearl and Red Globe might possibly work on a drought-resistant rootstock here. Meteorological data from 1967-87 indicates that the highest average minimum temperatures for the Shoubak area is 12.9 C.

Natural coloring of Red Globe and Black Pearl may be possible without Ethrel or a color girdle, provided they take to the soil and water shortage it causes. The Red Globe could possibly be harvested September through November.

A small trial plot of Perlette, Superior, Thompson, Black Chilean, and Crimson should be developed here with emphasis on acidifying the soil through the drip system and deep fine cultivation. Cover crops should be studied to aid in root penetration. These trials and studies should tell whether enough water, nitrogen, and nutrient could be freed to attempt to grow better seedless in this calcareous soil.

Table 3: PROJECTED REGIONAL HARVESTS BY VARIETY FOR JORDANIAN TABLE GRAPE EXPAN.

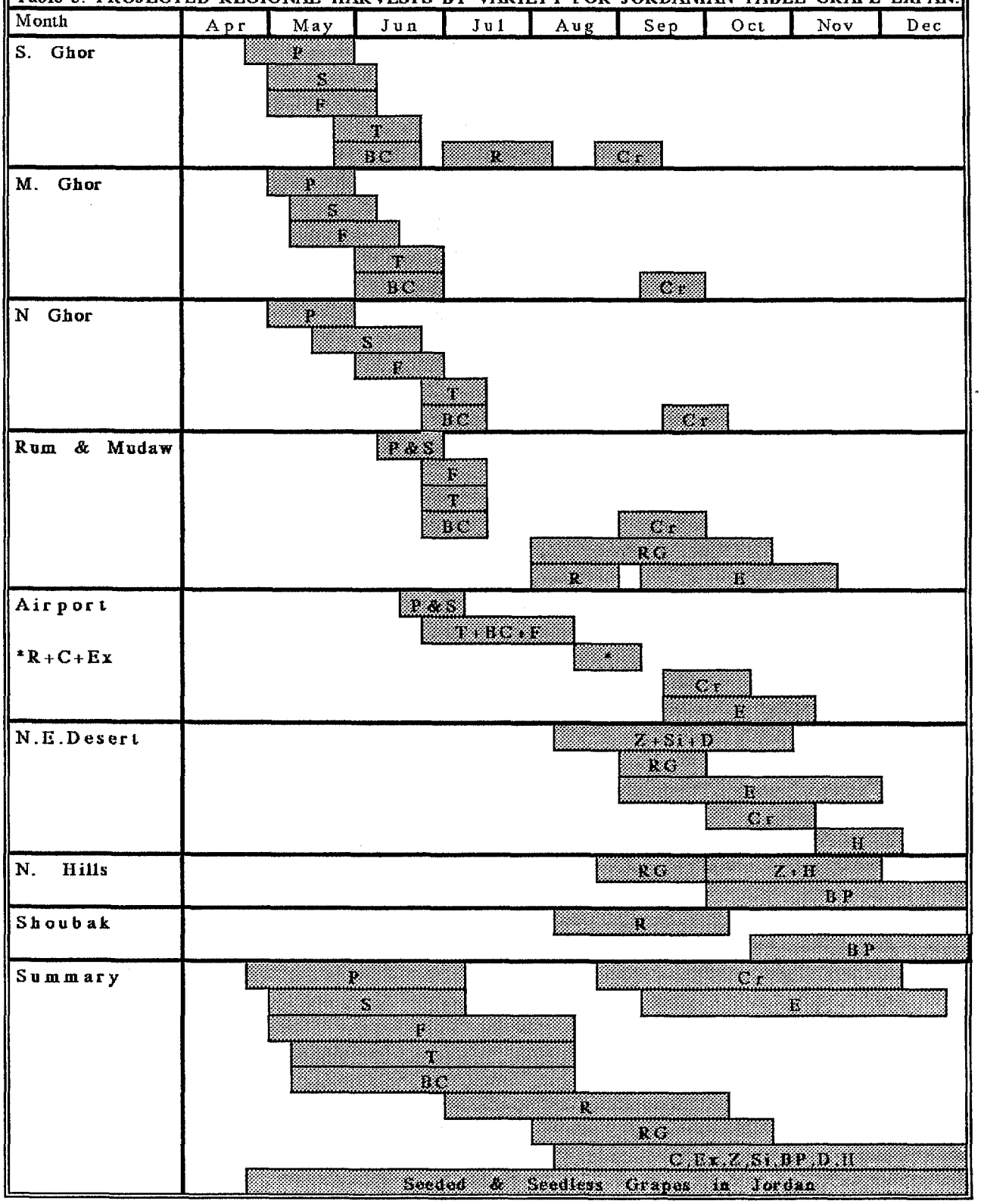

Abbreviation Key: **P-Perlette**, **S-Superior**, **T-Thompson**, **F-Flame**, **BC-Black Chilean**, **R-Ruby**, **Cr-Crimson**, RG-Red Globe, E-Emperor, Ex-Exotic, C-Cardinal, Z-Zeni, Si-Salti, BP-Black Pearl, D-Darawishi, H-Halawani (**Boldened are seedless grapes**).

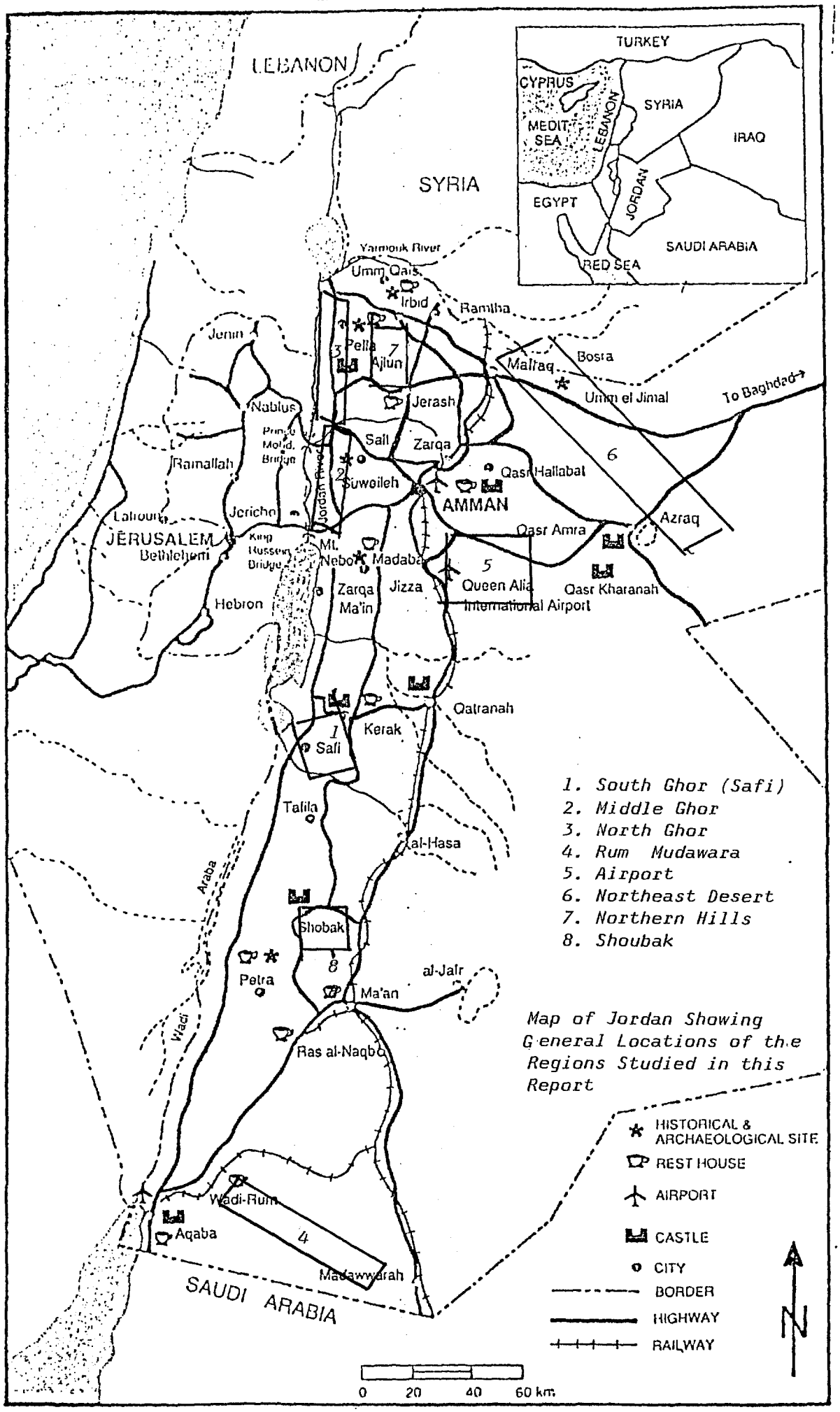

Map of Jordan Showing General Locations of the Regions Studied in this Report

II. Farming recommendations

All of the varietal discussions and seasonal recommendations are estimates of what could actually be accomplished in Jordan. This is the only degree of accuracy possible because table grapes grow vastly different under varying conditions of climate, soil, and geographical change.

Glossary

Bud break = emergence = the start of the green growth in the spring
Shoot = the green growth lengthening from a bud that eventually turns into a cane
Bunch = a ripe or mature cluster of grapes
Cluster = an immature bunch of grapes; small hard berry stage
Shoulders = sections or arms that make up a cluster
Cane = the mature woody shoot that is pruned and trained to form the vine structure
Wood = all the mature winter canes of a vine that is pruned and selected to form the vine
Cured wood = the aged, brown wood that is best for pruning and forming a vine
Spur = wood that is pruned down to 2 or 3 buds in length
Cordon = two arms of a spur pruned type of vine training
Box = one USA standard lug box of grapes, net weight 22 lbs = 10 kg
Brix = the unit of percent of the soluble solids of sugar in grape juice
Bloom = flowering of cluster
Shatter = nature of berry to fall off the cluster for some varieties, usually at bloom time
Set = flower that has turned into a berry and is fixed on the cluster
Thin = to physically remove berries from the cluster or chemically causing shatter of the cluster
Petiole = the stem portion of the leaf; this part is analyzed for nutrients and NPK in the USA to compare to level standards

A. Planting, Training, Trellis

Two types of vine stock can be used for planting a vineyard:

1. Cuttings: after all the leaves have fallen in the winter months, the wood for the cuttings is pruned off the vines. These cutting should be make from the healthiest cured wood of approximately 1 cm in diameter. The length should be from 35-45 cm with 5-7 swollen buds evenly spaced along the cutting. After callusing 3-6 weeks to reach the initial rice stage roots, the cutting is ready to plant.

2. Rootings: A nursery can be created by planting the callused cuttings with rice stage roots in small pots or in the ground spaced approximately 30 cm apart. A screened shade to reduce the direct intense summer sunlight is recommended to help the plants concentrate their strength in root zone development. These rootings remain in the nursery for planting February or March of the following

Table 4: The effect on production by planting and training timing in general soil types.				
General Soil Type	**Vine Stock**	**Planting**	**Training**	**Production**
1. Nutrient rich, good permeability, sandy soil	**Cutting**	**After callusing**	**Same year (2nd leaf)**	**1/2 crop (2nd) Full (3rd)**
	Rooting	**After 1 year (2nd leaf)**	**Same year**	**1/2 crop (3rd) Full (4th)**
2. Heavy clay soil, nutrients immobile, poor permeability	**Cutting**	**After callusing**	**Next year (2nd leaf)**	**1/3 (3rd) 2/3 (4th) Full (5th)**
	Rooting	**After 1 year (2nd leaf)**	**Next year (3rd leaf)**	**1/3 (4th) 2/3 (5th) Full (6th)**
3. Nutrient poor, sandy soil	**Cutting**	**After callusing**	**Next year (2nd leaf)**	**1/3 (3rd) 2/3 (4th) Full (5th)**
	Rooting	**After 1 year (2nd leaf)**	**Next year (3rd leaf)**	**1/3 (4th) 2/3 (5th) Full (6th)**

season.

The above procedure is very familiar to any grape farmer. But the reason it is here in this study is because of timing. That is, timing in terms of the strength of the maturing vine under varying conditions and the resulting production. There is evidence of vineyards in Jordan that are 4 years old and less that were trained too early and over-cropped yielding weak trunks of 5 cm or less. As a result, the quality of the grapes suffer on these vines and production can gradually decrease in future seasons.

Table 4 illustrates that by allowing the vine stock the proper amount of time to develop a strong root zone and trunk, the resulting vineyard can in some specific cases reach full quality production as early as the third year (3rd leaf*). Because this example is with a cutting, it gives a more economic situation for the farmer because of 1) the savings of making the vine stock from his own vineyard, and 2) a faster return on his investment.

Trellis systems

Overhead and multi-cordon trellis systems have been used successfully for setting huge crops of seedless grapes. However, an overloaded vine rarely produces an early quality grape crop. Which is exactly the kind of grape the early export market desires. So a percentage of new seedless grapes a grower desires to offer to the early export market should be planted on the standard T-type trellis system (figure 3) that is used in southern California. Crop load will be adequate because as the vineyard matures and fruitfulness is maintained, each shoot should yield 1-2 clusters in a normal year.

The wire arrangement of the trellis is basically like the type found at Rum Farming

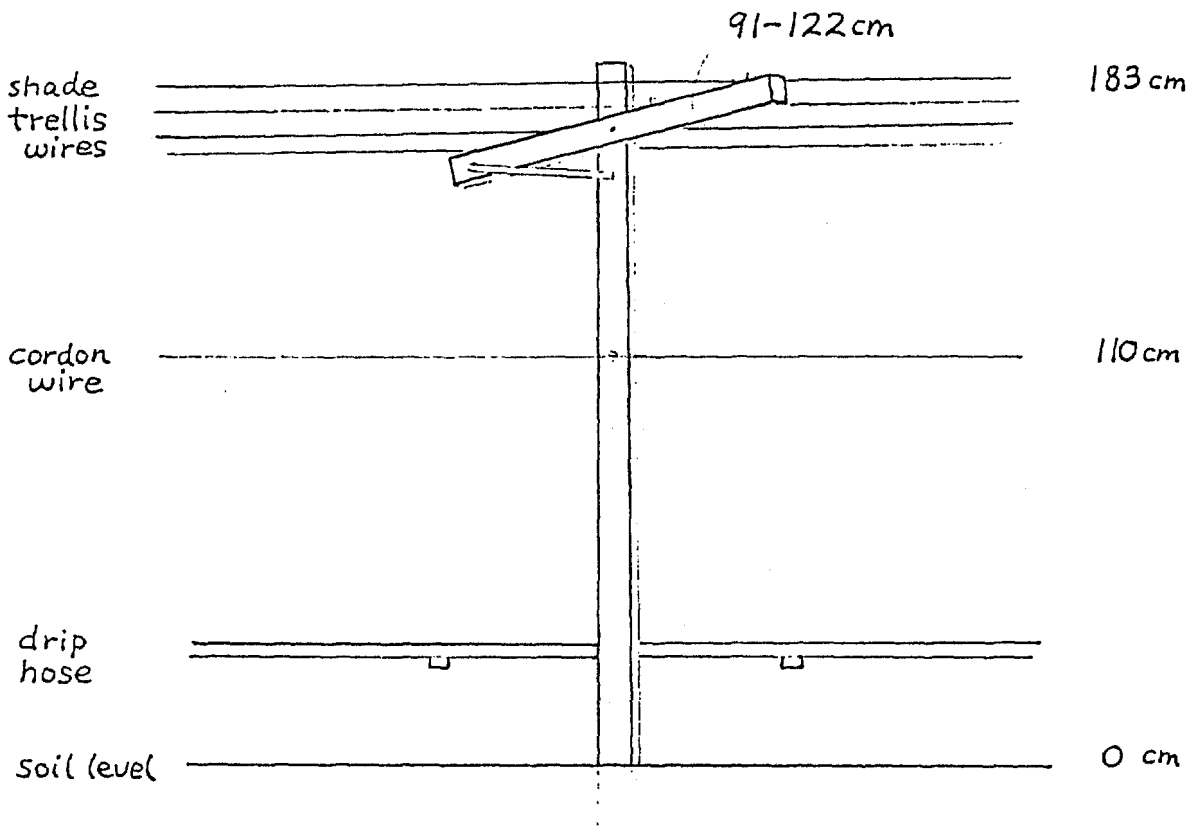

figure 3: T-type trellis system

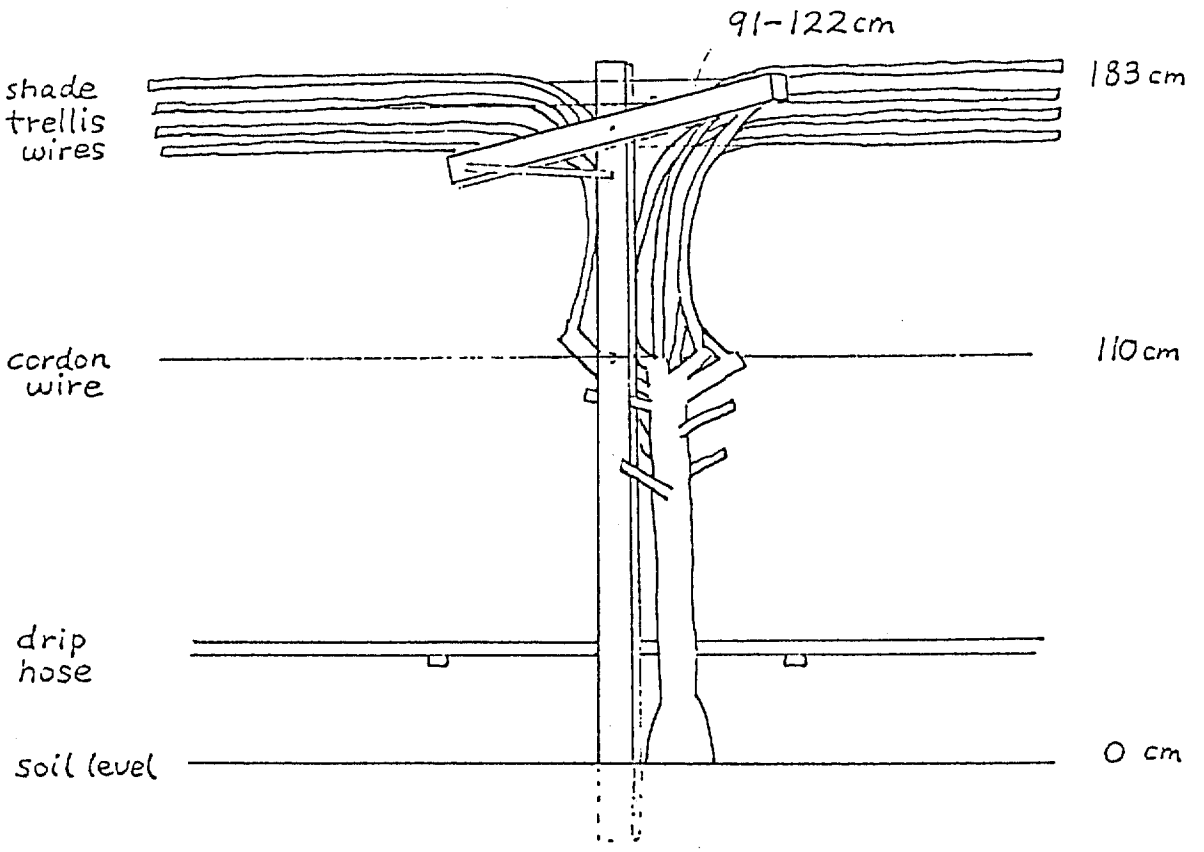

figure 4: Cane pruned vine

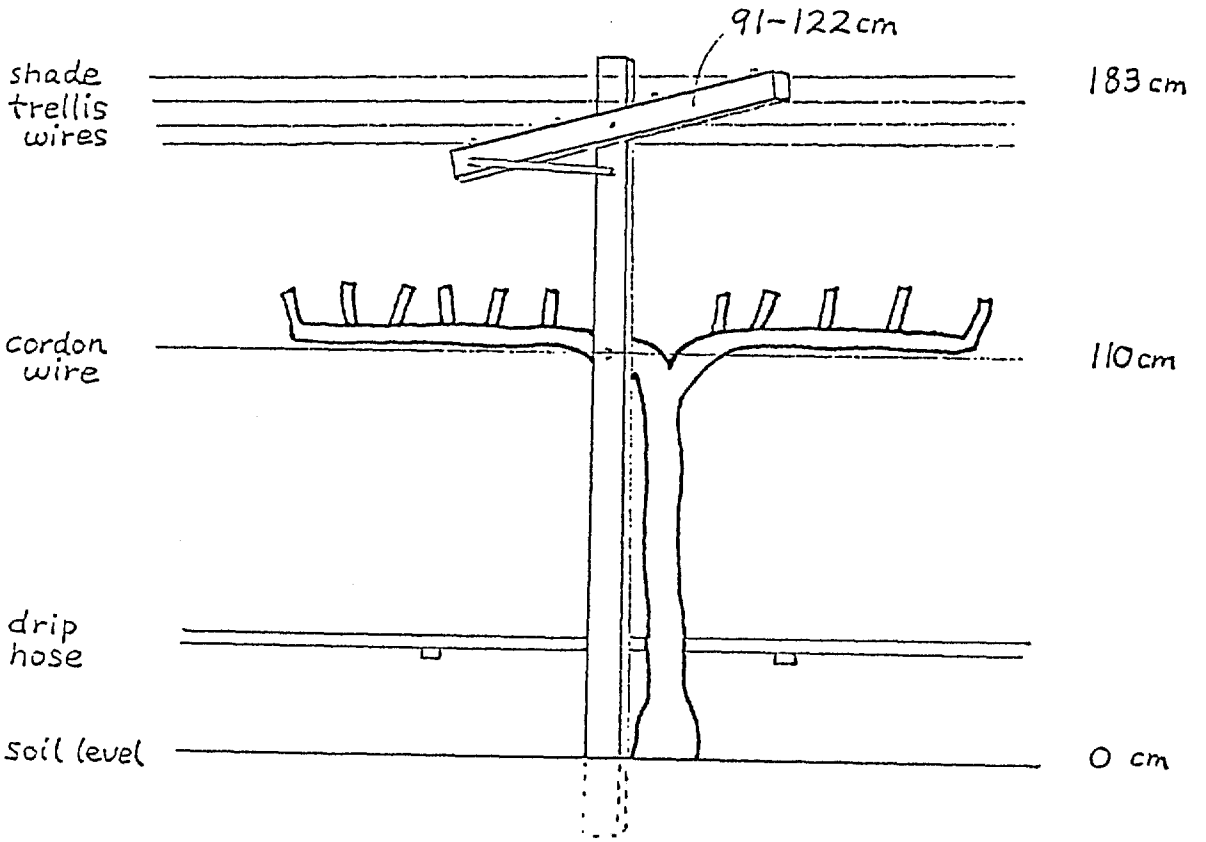

Figure 5 : Single cordon spur pruned vine

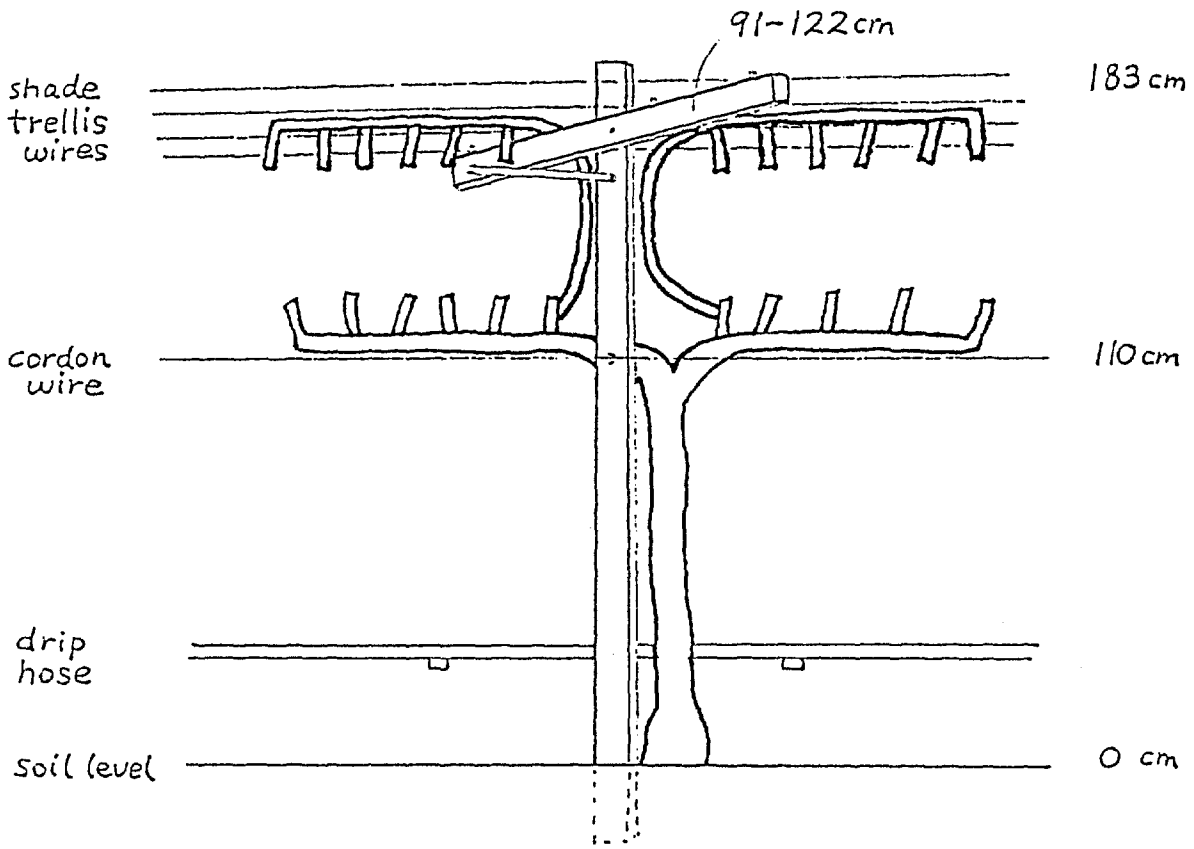

Figure 6 : Double cordon spur pruned vine

Company, Grameco at Mudawara, and JOVAC Farms in Middle Ghor. The T-trellis has a cordon wire at mid-stake and usually 4 parallel shade wires above. You can train either cane pruned or spur pruned varieties with this type of trellis. Eight or more canes can be trained (figure 4), or two arms on the cordon wire alone (figure 5), or an additional two arms (figure 6) on one of the center shade trellis wires (can add a 5th center shade wire for these if desired). Shoots growing from the cordon(s) will be trained through the trellis wires creating ample shade. The cane pruned vine shown on figure 4 illustrates that by training the canes from a lower point on the vine straight up and then across the shade wires - you can achieve up to 8 X 256 cm of cane length for fruit buds. The canes are trained half way to the next vine.

I have seen sunburned berries under the overhead, flat trellis that is common in Jordan. This occurs because the vine is so spread out and shoot development is so slow with so many growing points that sometimes adequate shade has not grown when berries are most susceptible to sunburn. Reflection from the soil and sulphur applications during the extreme heat of the day will cause burn even in the shade. T-type trellis reduce these problems. Typical spacing between vines and rows is:

1.8 m X 3.7 m or 1.5 m X 3.0 m

whichever is easier for equipment size. These spacings will give 124 or 148 vines per dunum respectively. The resulting leaf canopy and shape of the rows will allow efficient use of cultivators and sprayers.

Most vineyards in Jordan have rows running north to south because of the two prevailing wind directions of north-west in the summer and southwest-westerly in the winter. Most vineyards in the southern California desert have rows oriented east to west to utilize the maximum number of hours of sunlight exposure to each vine. If a vineyard trellis system and wind breaks are adequate, Jordanian vineyard developers should also try engineering some rows east to west. A close spaced north to south row orientation causes one side of the vine to be in the shade of the other row for part of the early morning and part of the late afternoon toward sundown. A wider east to west row orientation allows the sun to strike the top, and alternate sides of the rows for every hour of daylight as it "moves" over the vineyard. Longer exposure to the sun equals faster growing and faster ripening grapes.

Wind breaks should be continued to be utilized in all vineyards of Jordan. They should be integrated into the design of any new vineyard plan. The local pine varieties seem to grow fast and provide adequate wind breaks along vineyard perimeters. In severe constant wind areas, fruit trees could be planted every ten rows to further protect grape rows.

B. Hydrogen cyanamide (Dormex) and dormancy

Scientists have presented a huge amount of studies and reclassification of the degrees of dormancy in recent years. The important practical aspects of this information is what determines the timing of pruning and dormancy spray for earlier emergence and therefore earlier harvests.

DORMEX

(49 % aqueous solution of Cyanamide)

Harmful if swallowed.
Irritating to eyes and skin.
May cause sensitization by skin contact.
Keep out of reach of children.
Keep only in the original container at a temperature below 20 C.
Keep away from food, drink and animal feeding stuffs.
When using do not eat, drink or smoke.
Do not breathe spray drift.
Wear suitable protective clothing.
If swallowed seek medical advice immediately and show this container or label.
Strictly not alcoholic beverages before, during and after handling.
Normally a period of 24 hours before and after is sufficient.

Harmful

SKW TROSTBERG

SKW TROSTBERG AKTIENGESELLSCHAFT

D-8223 Trostberg · Postfach 1262 · Telefon 08621/86-1 · Telex 563129-0 sk d

figure 7

1955/37

DORMEX™

Safe Handling Guide

Manufactured by:
SKW Trostberg Ag
MG A12
D-8223 Trostberg
West Germany

Distributed by:
MOYER Products, Inc.
1540 E. Shaw Avenue, Suite 101
Fresno, CA 93710
(209) 226-4664

SKW TROSTBERG

Figure 8

Vineyard management immediately following harvest is simple but important. Because this stage marks the beginning of fruit differentiation and dormancy in the buds; it is important not to over or under water and fertilize. The vineyard is, in other words, best kept in a comfortable static state with a minimum amount of new shoot growth.

As the post-harvest season progresses into winter, the shoots cure and begin to shed their leaves. Some areas lack dormancy to the extent that leaves refuse to fall off the vines right into pruning time. Some success in removing these leaves has been accomplished with AN-20

spraying (ammonium nitrate, 20%) several weeks before pruning:

80/20% mix at 113 liters/dunum = 90.4 liters AN-20 plus 22.6 liters of water

Two cautions:

1. Remember, the buds of this type vine are still active and some may be burned by this spray! Experiment with caution.

2. This spray will effectively put 18 kg/dunum of nitrogen on the vineyard that will be absorbed by the vine when activated by rain or irrigation on the soil. So figure this nitrogen into the total N for your fertilizer program. It could be too much additional N and reduce fruitfulness!

The coldest period of winter actually signals the end of dormancy and the very beginning of the vine awakening. It is during the end of this coldest period of winter that pruning and dormancy spraying should be accomplished.

Spraying a 4 - 5% solution of Dormex (hydrogen cyanamide, H2CN2 49%) in plain water on freshly pruned vines will cause bud break in 21 - 30 days. The moisture of the spray solution should be just prior to the point where run-off from the bud would occur. So rates of solution will need to be around 5.50 to 8.75 liters of Dormex in 137 to 175 liters of water per dunnum. If the pruning cuts bleed, spraying should be delayed until bleeding stops. If no bleeding occurs, then spray within 2 - 4 days. Vines sprayed while bleeding commonly go through a temporal burned shoot stage as they emerge. this treatment of Dormex can make harvest anywhere from one to two weeks earlier than usual.

The other important benefit of spraying Dormex (figures 7 and 8) is that it causes this emergence to be more uniform than naturally occurs. It has been reported that in winter 1993, the Superior vineyards in the Jordan Valley had a poor bud break and some shoot failure; which resulted in lowering production. The warm winter caused this by not providing enough dormancy for the vines. (This happens often in the Coachella Valley, California which is the reason we developed hydrogen cyanamide use there.) Shoot development was further handicapped by a cold period following emergence. Dormex promotes a uniform bud break even in buds lacking proper dormancy.

The long term benefit of this uniformity is:

1. Less passes through the vineyard for various operations,

2. More uniform ripening

3. More grapes harvested in the first pick, and therefore

4. Reduction in costs

By varying the number of dunums you treat with Dormex; you can vary the amount of early harvest grapes versus untreated regular harvest grapes and spread out your total harvest period of the vineyard to take advantage of early and later markets.

It is important to note that in the warmest desert vineyards, buds are never really fully dormant. And because of the dry climate, their caps are always layered and partially open. So any type of oil spray used during dormancy will penetrate and burn buds. Make sure that any kind of oil spray only contacts the trunk area. Never allow the spray to hit the fruit wood of upper part of the vine.

C. Fertilization

The only suggestion for fertilization in Jordan is a comment on timing. It is best to have the liquid nitrogen applications (traditionally a vineyard needs usually 40 lbs N/acre or 4.5 kg N /dm. for each season) complete by 20 days before harvest. This usually corresponds with the first appearance of soft berries. Extending these application later than this stage will delay sugar formation.

About 75% of this fertilization should be applied prior to bloom, always stopping fertilizer applications during the bloom stage. Properly elevated nitrogen levels assist natural shatter during bloom. Stopping during bloom safeguards against too much shatter and making the clusters too thin. The Superior grower relies on this natural shatter to properly thin the bunch to promote berry size. So tight small berry Superior bunches can be an indication of inadequately low levels of nitrogen at bloom time. Looser larger berry bunches will weigh more and increase yield by minimizing waste from trimming.

Various examples of nutrient deficiencies can be found throughout Jordan. The most common one is the easiest and cheapest to remedy. Zinc deficiency commonly causes "little-leaf syndrome", yellowing and slowing of growth, and the worst part being "shot-berries". Shot-berries are variations in berry size from several millimeters to harvest size berries, often in straggly bunches. Most growers in California put zinc in every spray prior to the last before harvest. (To avoid any spotting.) Commonly the rate to use as a precaution is:

0.1 kg of $ZnSO_4$ 36% per dunum

Elevated rates are used when the deficiency is severe.

D. Fungicide program

The cases of Downey and Powdery mildew outside the Jordan Valley can be severe and easily spread by wind. Proper timing and coverage of a fungicide program will prevent an infestation from occurring. The keys are:

1. Initial sulphur treatment at shoot length of 15 cm

2. First fungicide (Bayleton, Rally, Rubigan, etc.) one week later

3. Continue fungicide sprays every 10 - 12 days with a sulphur application in between

4. Continue this program until berries turn soft then apply sulphur only until sugar appears

Two cautions:

Never apply sulphur in temperatures over 30 C and

Never apply dry sulphur to damp vines.

The best time to apply sulphur is on dry vines in the cool of the early morning or at night.

It is imperative that these materials completely cover all parts of the foliage and grapes for each application to avoid damage and loss from mildew starting. The vines have to be soaking wet with the spray solutions by large volume sprayrigs, not hand-sprayers.

E. Spray applications

Hundreds of articles have been written emphasizing the timing and coverage for spray effectiveness. It has almost been elevated from science to an art form. The main point in a table grape vineyard is that gibberellic acid and fungicide must drench the vine. The grape clusters should look like they have been dipped in liquid when gibberellic acid is applied. Every part of the leaves, shoots, and grapes should be soaked by the fungicide sprays; inside and outside. Anything less than these two concepts results in smaller berries and places for mildew to grow. Often these two chemicals are combined in the same application.

Spray adjuvants: These are additives that physically (not chemically) modify the properties of the spray solution to make it more efficient. Table 5 is an excellent lesson in this technology. Chemical companies will recommend the best types to use with herbicides, insecticides, and other chemicals.

For the gibberellic acid and fungicide sprays the most safe and effective type is like Latron B1956 (figure 9). It would be classified as a non-ionic surfactant (line 2, table 5). This means it assists in helping the spray solution spread, stick, and stay wet longer to increase chemical effectiveness. Using a surfactant like Latron B1956 at a rate of 158 - 200 ml per 100 liter of spray solution is safe for the grape skin and increases the effectiveness of gibberellic acid and

table 5

tion. These affect drift, evaporation, canopy penetration, persistence of chemical residue and entry into the plant.

3 Physiological variables include target species, stage of development, nature of surface being sprayed, surface area exposed, plant growth after application, leaf angle and others. These help determine pest susceptibility, coverage, absorption and initial deposition of product on the target.

In many cases spray adjuvants can help you get better, more consistent results. Though they are often misunderstood, adjuvants play a relatively simple role.

When added to or mixed with a pesticide, an adjuvant modifies the physical properties of the spray solution. It has no effect on the product's chemistry.

A properly selected adjuvant may be worth many dollars per acre in terms of improved results. But most adjuvants cost only a few cents per acre to use.

Follow these key suggestions to get your money's worth with adjuvants:

- Buy and use adjuvants supplied by well-known, reliable manufacturers. Some products that appear to be bargains may be diluted and have relatively little to offer.
- Understand the kinds of adjuvants available, and carefully select one to accomplish the specific result you desire each time you spray.

Surfactants are among the most widely used adjuvants. They reduce spray droplet surface tension. This causes the droplets to flatten out, which means each droplet covers a larger area on the plant.

Acidifiers change the pH of water used in making spray solutions. Water that has a high pH causes alkaline hydrolysis, which reduces the effectiveness of most crop chemicals.

Wind can cause spray drift, a major problem when you need to make an application. Often you can offset the effect of mild-to-moderate winds by using a *drift reduction agent* to increase droplet size. Of course, there are times when spray drift will occur, regardless of the precautions you take. At those times, delay applications until conditions are more favorable.

Clip and save the table on Pages 4 and 5. It can be your road map to better success with crop protection chemicals through proper selection and use of adjuvants.

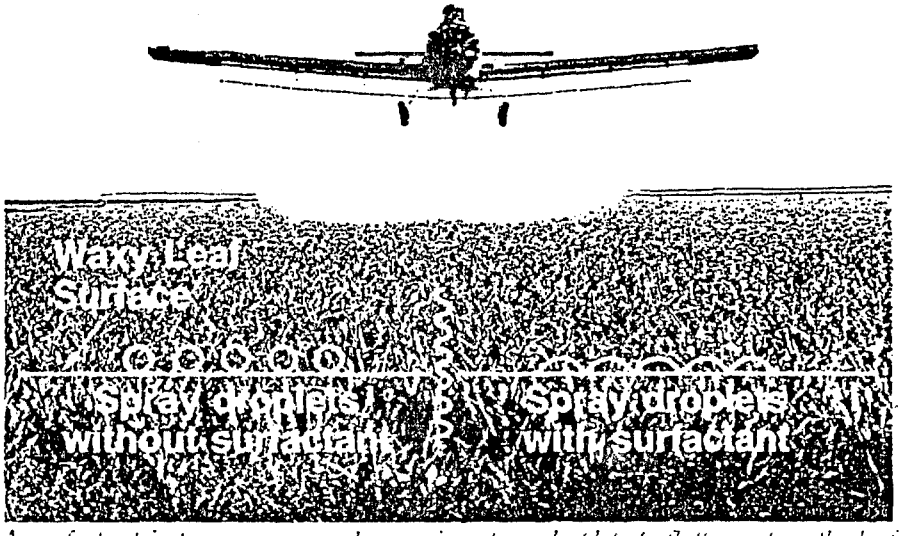

A surfactant improves coverage by causing spray droplets to flatten out on the leaf surface. This increases pest exposure to the crop protection chemical.

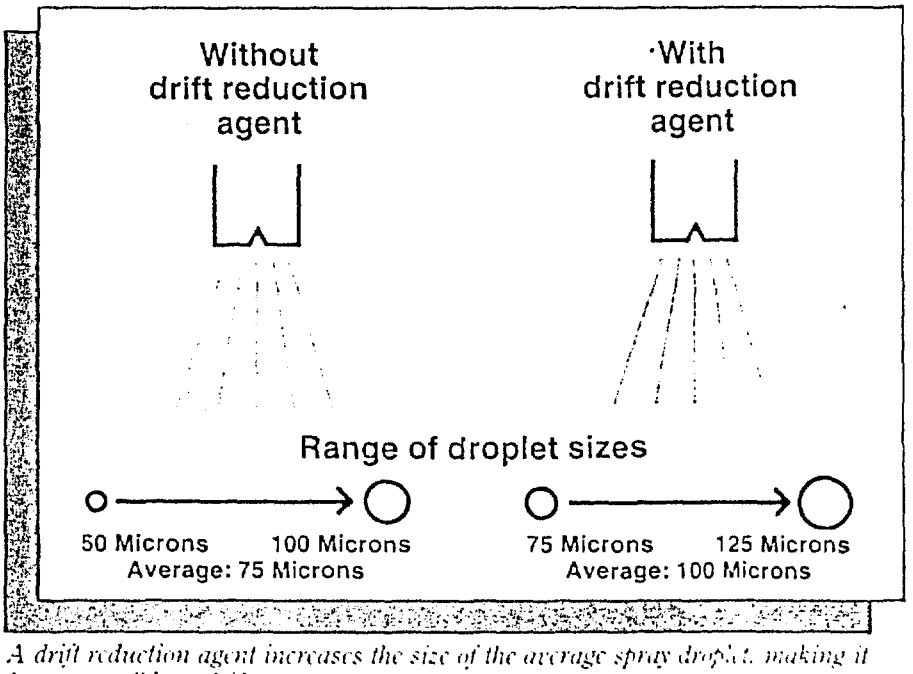

A drift reduction agent increases the size of the average spray droplet, making it less susceptible to drift.

STORAGE: Store away from excessive heat (e.g. steampipes, radiators), from sources of ignition and from reactive materials. Keep from freezing.

SPILLS AND LEAKS: Eliminate all ignition sources. Wear respirator suitable for vapor concentration encountered (MSHA/NIOSH-approved or equivalent). Wear protective clothing. Dike and contain spill with inert material (e.g., sand, earth). Transfer liquid to containers for recovery or disposal and solid diking material to separate containers for disposal. Remove contaminated clothing promptly and wash affected skin areas with soap and water. Keep spills and cleaning runoffs out of municipal sewers and open bodies of water.

IN CASE OF FIRE: Use water spray, dry chemical, or CO_2. Wear respirator, self-contained breathing apparatus (pressure-demand, MSHA/NIOSH-approved or equivalent) and full protective gear. Use water spray to cool containers.

CONTAINER DISPOSAL: Empty containers may contain product residue (vapor/or liquid) and can be hazardous. Observe all label precautions. Containers should be triple rinsed (or equivalent), punctured and then disposed of in a sanitary landfill or by incineration, if permitted by state and local authorities.

NET CONTENTS

1 GALLON (3.785 LITERS)

ROHM AND HAAS
PHILADELPHIA, PA. 19105
TELEPHONE: (215) 592-3000

9606-R5 MADE IN U.S.A.

35

≥ 1992

Latron B-1956™

Principal functioning agents:

Modified phthalic glycerol alkyd resin	77%
Constituents ineffective as spray adjuvants	23%
	100%

Calif. Reg. No. 707-50032-AA

KEEP OUT OF REACH OF CHILDREN

CAUTION

Before using this product, read the entire Precautionary Statements, Conditions of Sale and Warranty and Directions for Use, and Disposal Instructions on side and back panels. If the Conditions of Sale and Warranty are not acceptable, return the product unopened within thirty days of purchase to the place of purchase.

COMPOSITIONAL INFORMATION: The following chemicals contribute to the hazard of this product, and are listed in accordance with ANSI Z129.1 and state laws:

Modified phthalic glycerol alkyd resin	(trade secret)
Butyl alcohol	(71-36-3)

SPREADER STICKER

©Copyright 1991 Rohm and Haas Company

LATRON B-1956™ is a trademark of Rohm and Haas Company.

figure 9

fungicides greatly.

The air sprayers used in most Jordanian vineyards can be used effectively to apply the light moisture solutions of Ethrel on colored grapes, provided the pressure system is high enough to blast completely through the vine. But to effectively apply gibberellic acid and fungicides, a high volume piston pump type sprayer should be used to get the proper coverage. These are used and manufactured throughout the USA, Italy, France, and Germany. They are most effective to use on a vine with full foliage when spray volumes need to be 682 - 864 liters/dunum for proper coverage. They are usually called "gib-rigs". Every small and large vineyard in California has access to one. You must have the proper equipment to grow quality grapes.

F. Ethephon (Ethrel)

Ethephon is a plant regulator auxin that causes rapid uniform coloring of red grapes. It is sold under the brand name Ethrel by Rhone-Poulanc Company (figure 10).

There is no need to go into the complex scientific explanation of how this works. The important point is, like gibberellic acid, it is a substance that occurs naturally in a grape berry. The Ethrel boosts its level to assure coloring. Color evolves naturally in a colored grape if nighttime temperatures are cool. Ethrel is used in warmer climates as a substitute for the cool nights it lacks. It can be used a number of times up to 14 days prior to harvest. Generally, 1-2 treatments of 70-140 ml Ethrel per 60 liters per dunnum solution will provide complete and uniform coloring.

Jordanian grape farmers need to ask the AMO and Agricultural Department to help them get Ethrel approved for Jordan so their colored seedless grapes can complete in the European export market.

G. Crown suckering

This operation is done on every variety of spur pruned table grapes in California. Crown suckering refers to the act of removing from the bunch-bearing shoot all the leaves and non-fruitful shoots (suckers) from next to or below the highest bunch down to the wood portion (crown) of the vine. This removal shifts the flow of the vine's nutrient fluid to the grape cluster and newer leaves and in turn accelerates their development. It has been proven that the mature leaves that are removed, are past their efficiency level and it is time for the clusters to grow and newer leaves take over nutrition.

This operation also opens up the vine to allow better spray coverage and easier access for thinning the berries. This type of leaf removal is not done on cane pruned varieties like Thompson, Superior, and Ruby because they are prone to sunburn at times. Can pull just a few leaves around the bunches just prior to harvest, as long as it will not expose bunches to direct sunlight.

H. Girdling

The girdling of a vine can bring about rapid increases in size, sugar, and color if properly

PULL TABS TO REMOVE BOOKLET

RHONE-POULENC

Ethrel®

Plant Regulator

For Commercial Or Agricultural Use Only. Not For Residential Use.

For use on Tobacco, Tomatoes, Cherries, Grapes, Apples, Walnuts, Peppers, Blackberries and Cantaloupes.

ACTIVE INGREDIENT: Ethephon [(2-chloroethyl) phosphonic acid]* 21.7%
INERT INGREDIENTS: 78.3%
*Contains 2 pounds ethephon per gallon.

EPA Reg. No. 264-267AA EPA Est. No. 264-PA-01

KEEP OUT OF REACH OF CHILDREN

WARNING

FOR ADDITIONAL PRECAUTIONARY STATEMENTS: See inside booklet.

For PRODUCT USE Information Call 1-800-334-9745.

For MEDICAL and TRANSPORTATION Emergencies Only
Call 24 Hours A Day 1-800-334-7577.

RHÔNE-POULENC AG COMPANY
PO. Box 12014, 2 T.W. Alexander Drive
Research Triangle Park, N.C. 27709

1970

MADE IN U.S.A.
RP-4500-120-79

ETHREL is the registered trademark of RHÔNE-POULENC

Figure 10

timed. It can also be fatal to a vine or crop if the proper timing and procedure is not strictly followed.

Girdling refers to cutting a continuous ring through the bark of the stump completely around the stump as close to the soil as possible. This is done with a special parallel edged girdling knife with a width between the two blades of commonly 3-5 mm for desert vines. The depth of the cut is predetermined by the vine structure. It penetrates the outer bark through the inner cork bark to the white layer called the cambium (figure 11). It is crucial not to go deeper than this point of the tissue because it could injure the vine. It must be a clean and continuous to work. Any gaps will make it totally ineffective.

The effect of the girdle is to cause a partial temporary restriction of water and nutrients from returning from the top of the vine to the roots. The water and nutrients flow upward from the roots through the center wood of the vine in cells called xylem. The flow returns downward to the roots via the inner bark in cells called phloem. These two layers of conducting tissues are separated by the cambium layer. The girdle will usually heal within 3 weeks in a desert vineyard. In the interim, the water and nutrients will concentrate in the top of the vine causing increases in size and sugar, or color in a colored variety. This is why girdling is referred to as two types: either a size girdle or color girdle.

Critical Points of Girdling

1. **YOU CANNOT GIRDLE A VINE UNLESS THE VINEYARD CAN BE IRRIGATED.** This is because you must increase the water to the maximum possible daily amount (close to 70 liters per vine) for the day before, the day during, and the day after girdling. Then return to normal irrigation scheduling.

2. You cannot girdle a young vine. The vine stump should be no smaller than 7 cm in diameter.

3. You cannot girdle a vine that is overloaded with a crop that is greatly above average bunch count in size.

4. You cannot girdle a weak mature vine with a normal or larger crop in extremely hot weather (>35 C). Careful consideration should be taken whether to girdle any type of vine in heat of 35 C or higher. This is why girdling is done in only the first 3 hours after dawn.

5. The girdle should be placed as close to the soil as possible. Do not girdle the same cut from the previous season.

6. The girdle has to be clean and continuous or it will be ineffective and a waste of time and money.

7. Only a very few vines should be experimentally girdled each season under various conditions of vine strength, weather, and crop load before a grower is confident enough to girdle complete vineyard sections.

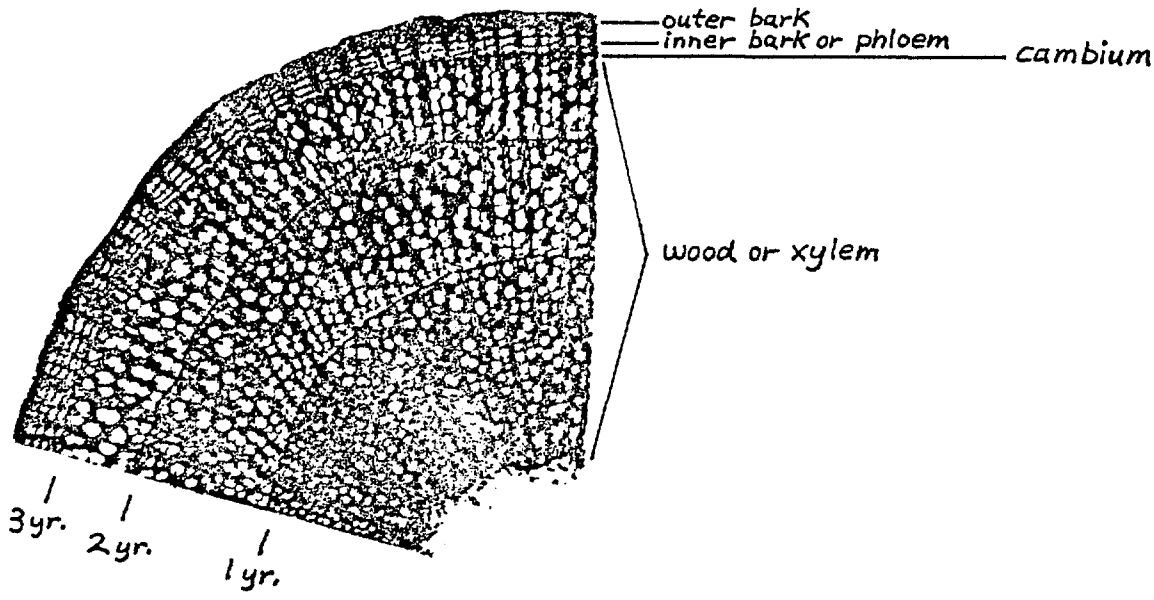

figure 11: A cross section of a grape vine trunk showing conducting tissues

(After Winkler, et. al., 1974, from Hilgardia, vol. 18, No. 5, 1948.)

I. Seedless grape farming

Perlette, Thompson, Superior, Flame, and Ruby are five seedless varieties that Jordan and southern California share in common. The following methods and lists show California practices that should be experimented with in Jordanian vineyards in order to prepare high quality grapes for any type of export market.

Vine stock can be obtained from the usual sources in France, Italy, and the USA. However the Superior Seedless patent is owned by Sun World, Inc. since 1992. They purchased the entire Superior Farming Company and hold exclusive rights to planting and marketing the Superior Seedless. In the rare cases they allow a sale of vines from their California base; by law they are entitled to yearly royalties and percentages per unit sales of the grapes. Jordan will eventually have to look into the implications of this patent in its planting program.

Perlette

Spur prune, then spray with 4 - 5% solution of Dormex.

Crown sucker when shoots are at 60 cm length.

Thin berries with brush just prior to bloom, at the time when the berries have the tendency to be easily removed.

Remove about 50% of the berries equally off 4 sides of the cluster leaving 80 - 100 berry count.

Pinch 10 mm off tip of long clusters < 3 mm off tip of short clusters

Do not apply fertilizer in irrigation during this thinning and while clusters are in bloom.

#l gibberellic acid spray of 32 - 48 ppm when berries are 1 cm in diameter.

Loosen bunches - remove some shoulders if the bunch is becoming too tight.

Size girdle vine when berries are 13 -15 mm in diameter.
(Often these 3 previous operations are very close in timing)

#2 gibberellic acid spray of 32 - 48 ppm 7 days after #1 spray

Cut canes with mower (or clipper) up to lowest bunch (or 0.6 m from soil).

Pull the leaves around the bunches one week prior to harvest. Do not expose to direct sunlight.

Harvest at sugar percentage of 15.5 brix. Berries should be 15 mm diameter and larger.

Yields are commonly 1233 - 1725 kg/dm.

Thompson

Cane prune to 8 canes with 3 - 5 spurs below, then spray with 4 - 5% solution of Dormex.

#1 gibberellic acid spray of 16 ppm to stretch the clusters when most (80%) have reached 6 - 10 cm in length.

The cluster shoulders are just beginning to "stretch" between the berries and stems at this stage.

#2 gibberellic acid spray of 8 - 16 ppm to thin (shatter) the excessive berries off when there is 80% bloom. If it is a normal shatter year, use the full 16 ppm. If shatter is higher than usual, vary down to 8 ppm. If shatter is total on many clusters, do not spray -wait till #3 spray.

DO ALL OF THE NEXT 3 OPERATIONS WHEN BERRIES AT 5 MM SIZE:

#3 gibberellic acid spray of 32 - 48 ppm for size

Size girdle

Thin with clippers -Cut tip off leaving cluster full clipper in length. If natural shatter or #2 gib. spray was not enough; clip up one or both sides of the cluster to loosen, and give adequate space for berry growth.

#4 gibberellic acid spray of 32 - 48 ppm for size, 7 days after #3 spray.

Cut canes around 30 cm off of ground.

Cut off substandard weak bunches several days before harvest.

Harvest at sugar percentage of 16.5 brix. Berries should easily be 16 mm and larger.
Average yields are commonly 1233 - 1972 kg/dm.

Superior

A Superior is farmed basically like a Thompson. But the major differences are:

1. No gibberellic acid sprays are necessary.

2. Will usually need to cut off some bunches because the Superior is so extremely fruitful that it will overcrop and diminish quality.

3. Thinning operation is tipping only. If the bulk of the liquid nitrogen is applied prior to bloom, natural shatter will create the looser type bunch necessary for proper berry size. A typical NO3-N (nitrate nitrogen) leaf petiole analysis at this time should be near 1200 ppm. Perhaps lower bloom time nitrogen has resulted in tighter, smaller berry Superiors in some instances in Jordan.

4. Harvest when sugar percentages is 16.5 brix. Berry size should easily exceed 16 mm in diameter. Average yields are commonly 1725 - 2465 kg/dm.

Flame

Spur prune, then spray with 4 - 5% solution of Dormex.

Throw canes through shade trellis wires to create a canopy of equal shade on both sides of the vine. Do this when the shoots are long enough to stay up through the wires and hang down over the sides.

Pull leaves when finished throwing canes. All leaves are removed from the cluster down. Do not expose clusters to the sun. Clusters in direct sunlight will turn orange or yellow. The combination of throwing canes and leafing creates the appearance of a tunnel filled with bunches inside the vine when looking inside the canopy.

#1 gibberellic acid spray of 5 - 8 ppm to thin (shatter) the excessive berries off the clusters when there 80 - 100% bloom.

Thin berries when all clusters have berries at about 10 mm in diameter. If natural shatter of #1 gib. spray is not enough clip up one or both sides of the cluster to loosen it and give adequate space for berry growth. Cut tip off cluster to leave 6 - 7 shoulders totaling about 150 -200 berries.

#2 gibberellic acid spray of 32 - 40 ppm when berries reach 12 -15 mm in diameter.

#3 gibberellic acid spray of 32 - 40 ppm 7 days after #2 spray.

Cut canes with mower (or clippers) just below the lowest bunch, usually about 70 cm from the ground.

Color girdle at first appearance of translucent to colored berries.

Ethrel: If the girdle does not help and nights are not cool enough to cause fast full coloring - spray a 1/2 - 1 pint per 54 gallon/acre solution of Ethrel (= 70 - 140 ml per 60 liter/dunum solution). If it does not improve color to uniform bright red within about 7 - 10 days; you can repeat the spray. You must be patient and wait for color to develop because you do not want to

overcolor and turn the berries black, which is undesirable in the export market.

Cut off substandard bunches one week before harvest.

Harvest at sugar percentage of 16.5 brix. Berries can be close to 25 mm in diameters.

Yields are commonly 1479 - 1972 kg/dm.

Ruby

Farming of Ruby Seedless is relatively the same as farming Flames, but the Ruby is cane pruned. The advantage of the Ruby is that its harvest season begins in August after the Flame harvest is complete in California. To assure that a space between their harvests is maintained; it may be best not to spray the Ruby vines with Dormex. A vineyard containing both Flame and Ruby in an area of poor dormancy will all need to be sprayed with Dormex to ensure proper emergence. The harvest interval will still be maintained relatively within that vineyard, but the Ruby harvest may overlap with a later Flame region harvest.

Although the quality of Ruby is not as high as the Flame - they are high yielding, commonly going 1972 -2465 kg/dm.

J. Newer seedless varieties

Many new seedless varieties have been introduced by universities and private nurseries throughout the 1980's and early 1990's. However, very few have proven strong enough and economical to grow commercially in the desert for the USA domestic and export markets. Here are two that are worth trying in Jordan:

1. Black Chilean - Reportedly called a "King Hussein". This is a brand new grape. There are no Black Chilean planted in California as of this study. They appear on the market as Chile finishes their Perlettes and starts offering their Thompson. So one will have to assume that their harvest period begins the same time as Thompson. It is supposed to be easy to grow, very strong, and produce very well. This is in contrast to the three black seedless currently being grown in California:

Beauty: very difficult to grow proper cluster shape. Must be very precise with bloom gibberellic acid spray timing within a 4 - 5 day window. Takes as many as 3 clipper thinning. These problems are why it is not advised to plant this grape in an area that is training new labor.

Fantasy: similar to Beauty but alternate bearing. That is, the production is extremely low and unprofitable every other year. One year it will put out a huge crop, the next year it might fail almost completely.

Black Maroo: from Australia. The berries are soft and weak under desert conditions.

2. Crimson - Bright red, large and firm berries. Excellent for storage. Can be harvested in late September to early October. It is farmed like a Flame. Some research has suggested that it can be grown with much less gibberellic acid than a Flame. Various rates will have to be tested in Jordan.

3. Seedless Muscats - are still being developed. They are not yet ready for commercial production.

K. Red Globe and other seeded varieties

Jordan has an extensive list of seeded varieties of which probably 90% are sold to the domestic market. The vineyard farmers are extremely skilled in knowing what the local consumer desires in a seeded grape; so I have very few suggestions for their farming.

I had the pleasure of seeing fine examples of Salti, Zeni, Darawishi, Halawani, Cardinal, Red Globe, and Muscat Italia at many scenic vineyards and agricultural stations. The Cardinal, Italia, and Ribier are three varieties that Jordan and California share in common. The Red Malaga, Tokay, Calmeria, and Almeria are also common to both areas, but in a decreasing smaller amount in California since the popularity of seedless grapes took over in recent years.

The Cardinal here is grafted on 41B and 1103B rootstocks. The quality of the bunches on these two is vastly different. Only Cardinal on 1103B should be planted if possible. 41B yields straggly bunches with shot-berries.

Remember: All these varieties including the seeded varieties already grown here, need to have a minimal amount of thinning with clippers to grow looser, uniform larger berry bunches for high quality. All should be tipped along with some shoulder removal.

Here are some examples of that type of thinning with two seeded varieties that should do well in Jordan:

Emperor: Same color as Cardinal but long berries and larger bunches. Spur pruned variety. The Cardinal in harvest in June here, the Emperor is harvested mid September through November in California. You should thin the Cardinal and the Emperor when the berries reach 10 mm in diameter. They may need some shoulders removed to loosen the bunch and then be tipped about clipper length.

Exotic: The Exotic has huge, round, black-blue berries that commonly grow to a diameter in excess of 30 mm diameter. They are also spur pruned and are grown like a Cardinal. You must limit spurs to 20 per vine total because it is very fruitful. They are thinned at the pre-bloom stage by merely tipping to 4 shoulders.

You have to drop them down to one cluster per shoot at this stage, for a total not exceeding 24 bunches per vine, in order not to overcrop the vine with the huge berry weights.

I was told that there are a few Black Pearl vines in Shoubak that are harvested in December. I cannot recommend it because I have not grown Black Pearl or seen it grown. I can only mention and describe it. According to Corrin Produce Sales in Reedley, California: It was obtained by them in 1983. Deep black colored, waxy grapes with large berries of 28 mm average diameter. Has very tough skin with large, loose, uniform regular clusters. Vine is vigorous and very productive. Flavor is excellent with good resistance to handling and shipping. Adapted for long cold storage (4 - 5 months). They say it ripens in October. Apparently under different conditions, this timing varies greatly. Small trial plots will have to be tried in various conditions of climate, soil, and location to learn if the Black Pearl could be valuable for the late export market.

Red Globe: Since its introduction just prior to 1990, the Red Globe has become a popular export grape, particularly to the Far East countries. Each berry can easily grow to the size of a small plum. It is farmed basically like a Cardinal, but thinned like an Exotic. The biggest cost in farming the Red Globe is that it sets such a huge crop, that it needs to be harvested in 3 to 4 picks to catch every bunch at its peak size and color starting in August in California. Testing it here with and without Dormex will yield the specific possible harvest periods.

Spur prune leaving 8 - 10 spurs, 2 buds long, on each side of the cordon for a total of 16 - 20 spurs.

If spraying Dormex, use 4 - 5% solution

Watch for Botrytis rot: use fungicide program of Rovral + Benlate (like Flames) along with Bayleton + sulphur or Trimatex + sulphur. Captan + sulphur dust mix is excellent if available.

Need to have cool nights in the range of 10 - 16 C for complete coloring. So it is possible that some Ethrel may need to be applied in addition to the color girdle at first sign of color change.

Crown suckering - leave leaf below the bunch, removing the rest of leaves and suckers below it. Leave only 2 shoots/spur regardless of whether the extra shoots have clusters.

Thinning - because the Red Globe is so fruitful, it will overcrop itself. This is why the suckers with fruit are removed during crown suckering. When berry size reaches 10 mm, drop to 20 - 30 clusters per vine, and cut each cluster to 5 - 6 shoulders.

This size crop per vine will yield 27 - 36 kg of large berry, uniform bunches.

l. Harvesting, packaging, cold storage

The combination of these three subjects could fill an entire encyclopedia. Packaging and storage are subjects for experts in box manufacturing and cold storage design. I will discuss each of these subjects very briefly.

Harvesting

Labor costs in California have risen so high that packing table grapes in a packing facility is not possible. All packing is done in the vineyard itself, which is called a field pack. It is done on stands, wagons, or under the vines. The best grown and cleanest grapes are the easiest and least expensive to pack because less trimming is necessary. All bunches must have every defect trimmed off them before packed. Export market will devalue the price of any shipment containing boxes with defective berries.

Packing

The important aspects of packing are tightness and weight of the finished box. The bunches must be packed in the box tightly enough to secure the grapes from moving during shipment, no matter how short the distance. Loosely packed grapes will bruise, crush, and fall off the stem before they reach market or even the cold storage. Each box should be packed tightly enough to give the appearance of a box of ball-bearings when opened. If plastic bags or tissue-wraps are used, the same tightness must be maintained between the bags or wraps.

Weight

The weight of each packed box must be supervised extremely carefully. You do not want to give away extra fruit by having boxes packed weighing over the net weight of the sale. You also cannot have boxes weighing under the net weight because many countries have strict laws governing this part of trade. Severe penalties and sales adjustments could occur.

Packaging and cold storage

These two parts of table grape production are inseparable because a poorly designed box will not cool properly in a cold storage facility. Each market can desire a certain size box and pallet. The consistent factor is that the perforations and construction within these dimensions must allow proper pre-cooling (initial removal of field heat on harvest day), long term storage, and shipping storage. Large international box manufacturing companies like Zellerback or Weyerhauser have experts that will analyze all facets involved from the field to cooling to market arrival when you purchase their boxes.

Sulfur dioxide

Sulphur dioxide (SO2) is used as a fumigant in cold storage to kill any disease or prevent rot from occurring or spreading in the boxes of grapes. A maximum residue of 10 ppm is allowed in the USA. SO2 pads or liners (figure 12) are sometimes used to supplement this treatment for long distance exports or long-term storage. Again, box and cold storage experts are the best sources for information and technology.

The most profitable aspect of cold storage for a grape farmer is the ability to store grapes long enough to let a poor market situation pass and enter a better priced market at a later date. So proper cold storage facilities must be at hand before vineyard expansion can occur.

M. Recommended literature

These publications are essential to have in a vineyard farmer's library:

1. Grape Pest Management, 2nd edition, 1992, publication 3343. 400 pages.

2. Harvesting and Handling California Table Grapes for Market, bulletin 1913. 72 pages.

3. General Viticulture, Winkler, Cook, Kliewer, and Lider, 1974. 710 pages.

4. Grape Nutrition and Fertilization in the San Joaquin Valley, publication 4087. 40 pages.

5. Salinity Appraisal of Soil and Water, l978, leaflet 21056. 26 pages.

6. Soil and Plant-Tissue Testing in California, 1978, bulletin 1879. 54 pages.

7. Grapevine Physiology - How Does a Grapevine Make Sugar?, 1981, leaflet 21231. 13 pages.

for ordering #1 and 2:

Publications
Division of Agriculture and Natural Resources
University of California
6701 San Pablo Avenue

Oakland, California 94608-1239
tel.(510)642-2461 fax.(510)643-5470

for ordering #3 - 7:

Agricultural Sciences Publications
University of California
Berkeley, California 94720

FIGURE 24. Sequence of packing grapes with an unvented liner and in-package two-stage sulfur-dioxide generators.

A. Lug with unvented liner and cushion pad. In lieu of an unvented liner, either a TKV lug or corrugated carton may be used if unvented and coated on the inside with a water-vapor barrier.

B. Two-stage generator in place with the first stage (fast-release rate) uppermost to be next to the fruit.

C. Naked pack half completed. Chimney wraps may also be used.

D. Pack completed and another two-stage generator being placed into position with the first stage downward next to the fruit.

E. Unvented curtain being placed into position. Greater freshness of the fruit is retained if the curtain is coated with a water-vapor barrier such as polyethylene.

F. Pack completed and ready for lidding.

Figure 12

III. Appendix

1. The recommendations and suggestions in this study should be followed with some expert technical assistance coming to Jordan during the critical parts of the table grape growing season. Perhaps experts could be obtained through volunteer channels such as VOCA.

The critical parts of the season would be:

Pruning - end of November through December
Training - February
Crown suckering or leafing - February and March
Spraying gibberellic acid, fungicide program - March and April
Thinning and girdling - April
Harvest - end of April through June

Related technical people who could be of value would be a farming soil scientist and irrigation specialist. Often a single expert has combined these two fields. They could tackle the permeability problems caused by the marl layers and set up irrigation programs by meteorological data for each region.

2. It would be extremely worthwhile for Jordan to send representatives from their table grape farming community for hands-on experience in California during the critical parts of the grape season. The Coachella Valley would be of course the best area comparable to Jordan; but the San Joaquin Valley would yield some of the same farming practices. (There are no Red Globe in the Coachella Valley, they start in the southern San Joaquin Valley and spread northward.)

Because of obvious budget restraints, the shortest continuous visit would be best. This would be:

March, April, May - in the Coachella Valley or

May, June, July - in San Joaquin Valley

These months would contain crown suckering/leafing through early harvest. It would give an individual experience in the practices mentioned in this study to bring back and share in Jordan.

Individuals should come from the private farms who have shown commitment to the quality table grape industry.

IV. Literature cited

General Viticulture, Winkler, A. J., Cook, James A., Kliewer, W. M., Lider, Loyd A., 1974. University of California Press, 710 p.

Crop Protection Management, December 1988, volume 1, no. 4. Johnson Hill Press, Wisconsin.

Jordan Climatological Data Handbooks, 1988, 1992. Hashemite Kingdom of Jordan Meteorological Department, Dr. Ali Abandah, director general.

Land Resources Yarmouk - Jordan Valley Project Master Plan Report, 1954. Soil Ministry of the Hashemite Kingdom of Jordan.

Acknowledgements

I would like to thank Dr. Salem Al-Lozi, director general of the Agricultural Marketing Organization and Dr. David Franklin of Sigma One Corporation for bringing me to Jordan on behalf of the Agricultural Marketing Development Project. It has been an honor to meet and work with the People of Jordan.

I would also like to thank the Hashemite Kingdom of Jordan Meteorological Department and Soil Ministry of the Hashemite Kingdom of Jordan for their valuable information.

Special thanks to Richard Peters, Senior Technical Representative, Fakhri Nustas, AMDP Administrator, Mohamed Hadi, Agribusiness Development Representative, and Laurette Mansour, AMDP Secretary, all four with the Sigma One Corporation; Mohammad Fara, Director of Post-Harvest Technology, AMO; for their valuable assistance during this study.

Fred and Mohammad: thanks for all the great tours of Jordan. Your help and patience will always be greatly appreciated.

VI. Jordanians Interested in Grape Production

	Name	Company Name	Telephone
1.	Mohamed Tamimi	Cooperative Organization	676526
2.	Maha Shawareb	Exporters Association	697713
3.	Fawzat Sahawneh	Gramico	640146
4.	Azzam Abu Ghazaleh	Gramico	640146
5.	Ghassan M. Masri	Rum Farms	649851
6.	Fahed I. Sawalha	Rum Farms	649851
7.	Hassan Abu Sido	Farmer	684926
8.	Shadah Murad Hana	Farmer	861627
9.	Omar Mustafa Battah	Cooperative Organization	665171
10.	Mohamed Mustafa	Deir Alla Regional Center	573003
11.	Basel Obeidat	Deir Alla Regional Center	573070
12.	Georgis Tadrous	Middle Ghor Agriculture	581087
13.	Mahmmoud Al-Dayyat	Farmer	573003
14.	Assem Jweihan	Hussein Jweihan Farms	662793
15.	Mustafa Abu Zeid	Ministry of Agriculture	573071
16.	Fayiad Houwarat	Ministry of Agriculture	573050
17.	Mohamed Nubani	Farmer	666644
18.	Ahmed Hayagnah	Farm Consultant	378427
19.	Khaled Nashwan	Olayan Trading Co.	575248
20.	Kheir Din Shukri	JOVAC	826327
21.	Khalaf Sha'alan	Southern Shouneh Agri.	571021
22.	Khalid Hiyari	Hiyari Nusery Farm	663509
23.	Zulkafa Ghosheh	Private Farm	816647
24.	Jamal Abu Nahleh	Cooperative Organization	665171
25.	Mohamed Karasneh	Irbid Ministry of Agri.	271036
26.	Said Alzarifi	Deir Alla Regional Center	573050
27.	Mohamed Khader	Beni Kananeh MOA	216371
28.	Moahmed Al Abshi	Irbid MOA	45621
29.	Abdul Rahim Ali	Northern Shouneh MOA	237002
30.	Arif Jweihan	Arif Jweihan Farms	662794
31.	Karim Haddadin	Karim Haddain Farms	661871
32.	Hummam Shawa	Exporter and Farmer	773924
33.	Zuhair Khazaie	Agricultural Station	291022
34.	Abdulah Ahmed	Farmer	477353
35.	Ahmed Olayan	Farmer and Merchant	891579
36.	Mohamed Kurdi	Princess Basma Farms	619974
37.	Yousef Barakat	Yousef Barakat Farms	836030
38.	Iyyad Abu Ali	Rum Farms	649851
39.	Abdul Majeed Hashlamon	Hashlamon / Shoubak	692325

	Name	Company Name	Telephone
40.	Hikmat Abu Killat	Southern Ghor Farms	690687
41.	Jamil Hattar	Jamil Hattar Farms	720685
42.	Mohamed Stetieh	Fruits Farms	695737
43.	Iyyad Khraim	Rum Farms	649851
44.	Hummam Nabulsi	Abu Ghazaleh Farms	610581
45.	Saleh Jweihan	Saleh Jweihan Farms	683331
46.	Ra'ed Jweihan	Saleh Jweihan Farms	683331
47.	Zuhair Jweihan	Jweihan Farms	604748
48.	Hisham Madanat	Asalat Farms	351668
49.	Ishak Madanat	Asalat Farms	351668
50.	Bashar Habashneh	Sharif Zaid Farms	378427
51.	Wa'el Haddadin	Haddain Farms	661871
52.	Arif Masalha	Private Farms	20154
53.	Mazid Hamdan Masalha	Private Farms	570023
54.	Dr. Salem Al-Lozi	AMO	661192
55.	Mahmmoud Hiyyari	AMO	661192
56.	Mohamed Fa'ra	AMO	661192
57.	Ayyoub Haddad	AMO	661192
58.	Jalal Hammad	AMO	661192