PN ABY-966
91394

THE JORDANIAN FLOWER INDUSTRY:

A PRODUCTION AND POSTHARVEST

PERSPECTIVE

prepared by:

Paul A. King, Ph.D. and George L. Staby, Ph.D.
Perishables Research Organization
P. O. Box 1552
900 Chiquita Road
Healdsburg, CA 95448 USA
707-433-1982 (phone)
707-433-1984 (fax)
stabygeo@aol.com (e-mail)

prepared for:

Sigma One Corporation

Under Contract to:

United States Agency for International Development

February, 1996

Preface

This report is intended to be a grower's technical guide for the production, postharvest handling and export of cut flowers grown in Jordan. Following the executive summary, the report is divided into two main sections, production and postharvest care, each of which contain detailed technical information. A listing of suggested additional readings and applicable appendices are also presented.

Specific financial analysis of the cut flower export business in Jordan is contained in other documents associated with this study. Combined, this report and the associated financial documents should provide a foundation to allow Jordanians to determine the potentials of a cut flower export business.

During the fact finding stage of this study, the authors were asked if they could determine what it would take to obtain the specific blueprints and costs for a complete "turnkey" greenhouse facility of five (5) hectares. In this regard, "turnkey" means that a greenhouse and associated equipment and facilities would be delivered, in total, to a site in Jordan for erection. The results of these efforts are presented in Appendix D.

Executive Summary

Introduction

A four week study of the Jordanian cut flower industry was conducted by Perishables Research Organization (PRO). This study was supervised by the Sigma One Corporation under contract to the United States Agency for International Development (USAID). Included in this study was a 16 day on site examination of the cut flower production and postharvest flower care infrastructure in Jordan.

A main responsibility of PRO personnel was to provide detailed recommendations emphasizing the technical aspects of flower production and postharvest care as well as certain financial and marketing assessments. Of special concern were the ramifications associated with the export of cut flowers grown in Jordan. The results of these efforts are presented in this report.

The present study was preceded in 1995 by PRO providing four Jordanian flower growers 22 days of intensive training including visitations to numerous floral businesses. Also sponsored by

USAID through the Sigma One Corporation, these sessions were held at numerous locations in the United States. Many components of the present study were supplemented with information gained from this earlier project.

For simplicity's sake, the terms "cut flower" and "flower" are considered to be the same.

Comprehension of Jordanian Flower Industry

While the authors have over 51 years of combined domestic and international floral industry experience, they recognize that there may be certain flower industry characteristics unique to Jordan not uncovered in the limited time (36 man-days) they have spent on this project. In addition, the information gathered to date for this report may only represent the "tip of the iceberg" of understanding Jordan's new flower export business opportunities. Nevertheless, the authors believe that there are sufficient commonalities among all flower producing and exporting countries to make direct comparisons, recommendations and predictions possible.

Infancy of the Jordanian Flower Industry

A national industry less than ten years old represents both opportunities and roadblocks for success. It is believed that success will come mainly from "in the trenches" efforts by flower growers and exporters and not from government subsidies and other bureaucratic efforts, including this report. These latter efforts, as important as they may be in providing basic information, cannot substitute for the "hands on" experiences gained by workers in the industry.

A prime example of "in the trenches" or "grass roots" efforts to develop a flower industry from the ground up is Colombia. Colombia, the world's largest producer <u>and</u> exporter of flowers, has only been in this business for a short 25 years. This industry was started by mostly agriculturally and business trained individuals with entrepreneurial attitudes. The authors believe that similar individuals are in Jordan who can lead this country's efforts in the international flower industry.

Granted, the availability of land and suitable flower growing climates in Colombia cannot be matched in Jordan. Yet there are no inherent reasons known to the authors that would prevent Jordan from establishing a profitable flower industry, both for

export by air and land as well as for domestic consumption. In other words, if Israel can operate a successful domestic and export flower industry, so can the Jordanians!

The authors also believe that Jordanian flower growers should learn from, but not necessarily emulate, grower and export practices in other countries including those in neighboring Israel. Of prime importance is to avoid becoming a "me too" flower supplier but rather to create niches that would be difficult to copy by competing countries.

In short, if Jordan produces flower crops that are already considered to be commodities, then their only chance to survive would be for them to be among the low cost producers. Since Jordanian flower growers will most likely not be among the low cost producing countries, the authors question the wisdom of emphasizing floral crops like roses and carnations that are already considered commodities in many markets.

Flower Production Capabilities and Limitations

The Jordanian flower industry is truly in its' infancy. Yet the quality of the products is amazingly good considering the basic nature of the physical equipment. Ranges without power or telephone service were producing locally acceptable crops with gravity fed watering systems.

This will have to change if the industry is to become competitive in the world market. The climate is both too warm and too cold to have year round production outside. Consequently, greenhouse structures with appropriate heating, cooling and ventilation will be required. It is felt that a 5 hectare range is necessary to produce sufficient product to attract customers and be a force in the market.

Multispan structures with passive roof ventilation and a fog cooling system are recommended. The gutters in this type greenhouse could be equipped with drains to capture rain water. About 14,000 cubic meters of water could, in principle, be captured from a 5 hectare range. The heating system should be hot water circulating through tubes in the flower beds. The growing media should be sand, gravel, perlite or other inert material. The beds should be constructed in a manner which allows the excess nutrient solution to be recovered. Additional structures and equipment are described and references are presented that should permit an entrepreneur to design a unique range.

A five hectare range will require an experienced manager, grower and assistant growers. Managing such a large operation, with a work force approaching 100 people will be a daunting task. Hands on experience is almost a necessity. Apprenticeships should be planned in advance for the key managers.

Although the labor rates in Jordan are reasonably low, strong consideration should be given to computer control of the greenhouse range. At a bare minimum, computer programs will be necessary to optimize production planning and space utilization.

Flower Postharvest Care Capabilities and Limitations

The initial capital required to construct and staff facilities to properly care for flowers after harvest is insignificant compared to capital required for production-related facilities. In addition, the cost to operate these postharvest facilities is insignificant. For example, the biggest costs associated with postharvest facility construction are for grading sheds and coolers. Assuming a five hectare production range, the capital required for these two postharvest facilities would be in the $30,000 to $50,000 (US) range whereas the production facilities would cost a minimum of $1.5 to $2.0 million.

Another way to view postharvest care and handling costs is as a percentage of total production and marketing costs, both fixed and variable. Depending on crop, climate and method of growing, these postharvest costs generally are in the 2 to 4% range.

The above examples strongly suggest that Jordan is in a position to develop state-of-the-art postharvest care and handling facilities with relatively little investment. However, at the time of this writing, the existing postharvest facilities actually visited as well as the ones described in meetings are mostly inadequate. It is therefore highly recommended that steps be taken immediately to develop a proper postharvest care and handling infrastructure before:

- The cost of retrofitting present ones becomes prohibitive.

- Flower quality is adversely affected to the extent of loosing export business and/or not being able to penetrate export markets because of poor flower quality due to inadequate postharvest care facilities and procedures.

Potential Export Capabilities and Limitations

Distribution related components of the Jordanian export flower industry will most likely be one of the most important factor in determining its success or failure. Of particular importance are the transportation modes available to carry flowers to distant markets.

Truck and intermodal (sea, train and road) transport systems represent "surface" modes as compared to air shipments. Surface shipments are generally better than air because:

- Flower quality upon arrival at export markets is better.

- Transportation costs are lower.

- Growers and exporters have more control over the equipment.

- Growers and exporters have more control of the routes and delivery times, the latter of which is <u>most</u> important to future export customers.

Having no direct contact with international bodies of water, sea transport of flowers seems unlikely. However, if properly equipped intermodal containers are available for outbound cargo and existing intermodal container ships presently make port calls at accessible locations in neighboring countries, this transportation mode should not be overlooked for certain flower species and markets. Israel tested this concept in detail many years ago and Morocco is testing a similar concept now for flower export to Europe.

It is assumed by the authors that truck transportation routes are limited as are the population centers reachable by truck. Regardless, every effort should be taken to reach attainable markets by truck.

After reviewing the information prepared by High Value Horticulture in their publication: "Opportunities For Cutflower Exports From The Hashemite Kingdom Of Jordan" and comparing their findings to the ones obtained by the authors of this report, it is believed that available and reliable air transportation may become a major limiting factor to flower export. Growers and exporters should concentrate their efforts in this subject area to fully understand these limitations and prepare alternative plans "when" (not "if") air space is not available.

Key Strengths of the Jordanian Flower Industry

- It is a young industry and therefore not held down with biased opinions as to how this industry should be developed and operated.

- Entrepreneurial spirits flourish with many people already in the Jordanian flower industry.

- Present flower quality is reasonable considering the young age of the industry and the less than ideal facilities presently used to grow some of the flowers.

- Arab-based countries offer little competition, yet, some are potential markets for Jordanian exports.

Key Weaknesses of the Jordanian Flower Industry

- Lack of control of transportation modes.

- Lack of control of international trade agreements that are presently unfavorable for exporting flowers (i.e.., added duties).

- Many present production and postharvest facilities are inadequate.

- Year round climate conditions are not conducive for flower production especially when compared to certain producing areas in Africa and South America.

- The flower production and exporting industry in Israel.

- Will most likely be not a low cost producer.

Suggested Next Steps

- Establish at least one state-of-the-art production facility.

- The proposed five (5) hectare greenhouse facility should be built in one to two hectare sections. This will allow time for the management to learn the operational skill require to run such a facility.

- Develop key postharvest facilities at grower level and at point of export (most likely the airport in Amman).

- Implement proper postharvest chemical and temperature management techniques at grower level.

- Investigate and grow alternative or additional crops to roses, carnations and gypsophila.

- Investigate the possibility of teaming up with a company that specialize in flower export (such as Florimex of Frankfurt, Germany) to handle this end of the business in order to allow growers to concentrate on production-related matters.

- Obtain a copy of a similar USAID flower export study for Morocco presently being coordinated by Bill Grant of Development Alternatives, Inc (DAI) in Casablanca. Some information in this report might be applicable for the Jordanian flower project.

TABLE OF CONTENTS

Preface i

Executive Summary i

SECTION ONE
PRODUCTION

Introduction 14

Physical Plant 15
- Greenhouses
- Greenhouse Coverings
- Greenhouse Heating
- Meteorological data for Amman Airport
- Heat transfer coefficients, U Factors
- Possible savings with root zone heat
- Greenhouse cooling
- Packing Sheds and Postharvest Facilities
- Design and Layout of Range

Growing Media 22
- Growing Media properties
- Fertilizers and fertilization practices
- Fertilizer acidities and basicities
- Irrigation - Piping Systems
- Irrigation - Injector Systems
- Water Quality
- Desirable ranges for irrigation water values in ppm
- Acid required to lower pH of one cubic meter of water
- Analytical Requirements
- Accepted ranges for the various nutrients in native soil and soilless media

Tissue nutrient levels for carnation 32

Tissue nutrient levels for rose 33

Tissue nutrient levels for gypsophila 34

Corrective procedures for various nutrient disorders 35

Insect Control 35
- Ultra-low volume application versus

standard manual sprayer.

Disease Control 37

Integrated Pest Management 37

Sanitation 37

Starting Plant Material 37

Quality and Consistency 38
Carnations
Hybrid Tea Roses

Cultural Procedures 44
Gypsophila
Carnation
Rose

SECTION TWO
POSTHARVEST CARE AND HANDLING

Introduction 50

Flower and Plant Quality as Judged by Consumers 52
Rose color:
Rose sale units:
Importance of fresh flower designs: 52
Flowers and Human Well-Being 53

Communication and other behavioral modifications
Stress reduction
Hospital stays

Financial Rewards for Proper Postharvest Care 53

Production (Grower) Factors/Decisions Affecting Postharvest Life 56
Species and cultivar grown
Growing media (physical and chemical properties) 57
Flower maturity at time of harvest

Checking Flower Quality 57
Subjective
Objective
Temperature
Inventory count
Name
Bunch tie location

Cut stem end
Leaves remaining

Grades and standards 60

Temperature Effects on Postharvest Performance 60

Effect of temperature on flower deterioration rate and vaselife 61

Transpiration 61

Respiration 61

Relative respiration rates (heat production) of carnations and roses at different temperatures 62

Concentration of ethylene and time of exposure resulting in unacceptable carnation flowers at various temperatures 63

Ethylene Effects and Control Measures 63
- Historical considerations
- Sources and levels required
- Plant synthesis/physiology

Some ethylene sensitive flowers listed by common & generic names 65

Controlling ethylene-induced disorders 66
- Sanitation
- Temperature
- Species/cultivar
- Damaged flowers (mechanically- and pest-induced)
- Controlling ethylene "action" sites
- Inhibitors of ethylene synthesis
- Scrubbers or filters 67
- Air exchange/circulation systems 67

Positive ethylene effects 67

Testing for STS Effectiveness: "Apple (Ethylene) Test" 67

Hydrating ("Hardening Off") Fresh Cut Flowers 69
- Role of dirt, debris, microbes and air bubbles
- Cutting stems in air
- Cutting stems under water

Placing stems in warm water
Solution depth
Cutting stems on an angle
Role of sugar
Hydrating solution
Citric acid versus aluminum based
Chlorine based hydrating solutions

Fresh Flower Foods 74
Definition
Benefits
Level of industry use
Effects on vase life
Effects of water quality
Powders versus liquids
Dispensing systems
Making your own

Storage Considerations 76
Temperature
Relative humidity
Precooling
Flower type and harvest stage
Short versus long term
Wet versus dry storage

Packaging 78

Light 78

Transportation Factors: Surface and Air 78

Diseases, Insects and Postharvest Crop Performance 79
Insects
Diseases
Sanitation
Flower buckets
Flower storage coolers
Old flowers
Under water cutters
Fresh flower solutions

Packaging Effects on Flower Quality 81

Harvesting and Postharvest Care Procedures 83
Introduction
Harvesting
Handling Procedures Immediately After Harvest

Grading
Bunching
Treating Bunched Flowers with Solutions
Identifying the Two Flower Types
Sensitive to ethylene gas
Insensitive to ethylene gas

Treating Ethylene Sensitive Flowers: Introduction 85

Treating Ethylene Sensitive Flowers: The Specifics 85

Treating Non Ethylene Sensitive Flowers: The Specifics 87

Fungicide Dip 87

Short Term Storage 88

Long term storage (dry) 88

Long term storage (wet) 88

Additional Care Tips 88

Short Summaries 90
Agapanthus
Alstroemeria
Aster
Baby's breath (Gypsophila)
Bouvardia
Carnation
China aster
Chrysanthemum
Delphinium
Freesia
Gerbera
Iris
Liatris
Lily
Rose
Snapdragon
Sunflower
Sweet William
YelowW aster

Detailed Summaries 102

Carnation 102
Production Factors

Harvest Factors
Postharvest Factors
Preservatives (sugar-based)
Preservatives (rehydration systems)
Preservatives (other)
Storage
Packaging
Transport
Pathology
Other
Keys to Success - Carnations

Gyphsophila 113
Production Factors
Harvest Factors
Postharvest Factors
Preservatives (sugar-based)
Preservatives (anti-ethylene)
Preservatives (other)
Water
Storage
Pathology
Other
Keys to Success - Gypsophila

Rose 114
Production Factors
Harvest Factors
Postharvest Factors
Preservatives (sugar-based)
Preservatives (anti-ethylene)
Preservatives (rehydration systems)
Preservatives (other)
Water
Storage
Packaging
Transport
Pathology
Other
Keys to Success - Roses

Speciality Cut Flowers 131
Definition
Common genera - unknown ethylene sensitivity or non ethylene sensitive
Common genera - ethylene sensitive
General Guidelines for Postharvest Care
Special Consideration

Sanitation
Water stress
Ethylene
Temperature

References and additional reading list 134

Appendix A: Investigation of a spray cooling system for greenhouses

Appendix B: Design and installation manual for turbulent twin wall drip tape and cane turbulent drip tape

Appendix C: Floriculture crops: chemical use booklet a guide for insecticide, miticide, fungicide, growth regulator, and herbicide application

Appendix D: Turnkey greenhouse and associated facilities proposal

SECTION ONE

PRODUCTION

Introduction

The Jordanian cut flower industry is truly in its infancy and is suffering the normal growing pains that would be expected. Because of this early age the facilities are very basic. Usually the ranges lack positive environmental controls such as heating, cooling, ventilation and humidity controls. The farms are generally small and suffer from a lack of an infrastructure such as good roads, packing sheds, head houses, coolers etc. Layouts of the farms may be dictated by the shape of the land, not the efficiency of the over all operation. Many farms do not have electricity or telephone service.

In spite of these difficulties the quality is surprisingly good and is a testimony to the ingenuity and abilities of the growers. However, many changes must be made to become a reliable supplier of flowers to the world market other than on a hit and run basis.

This portion of the report will try to identify the changes necessary to become a significant exporter to high quality markets such as Europe and others.

The quality of the present production is only occasionally satisfactory for markets other than the neighboring states. Many grades and standards (more detail in a later section) required for Europe are not presently being met. In addition, reliable service is necessary for long standing relationships with customers overseas. It is our opinion that basic changes in most aspects of the industry will be required.

There will be a critical need for grower/managers with "hands on" experience. They should thoroughly understand the proper production and postharvest treatment procedures for the chosen crops. A range the size we are recommending will require management skills of the highest order. Such people may be very difficult to locate in Jordan. On the positive side, the supply of technically educated agricultural engineers represents a potential resource. Grower/managers should be trained at a location(s) having the proper equipment and expertise.

Fundamental changes must be made in the physical plants. Proper greenhouses with the appropriate environmental control equipment, packing sheds, coolers and precoolers etc., will be necessary. The structures should be situated to allow proper flow of materials in and out of the farm. Examples of such facilities will be provided later in this report.

A minimum size of five (5) hectares is believed to be required

for efficient production, storage and market impact. A range this size will need a computer program to control production, space, product and materials required. Ideally the whole range should be computer controlled. Such programs are commercially available or can be customized for the operation with one of the various spread sheet/data base programs.

A previous study entitled "Opportunities for Cut flower Exports from the Hashemite Kingdom of Jordan" was prepared for the Agricultural Marketing Organization. It was concluded that Jordan should concentrate on three crops, carnations, roses and gypsophila. These authors felt it was important to grow flower types with a sufficiently large market demand that importers will buy them as a single item. Once exports of these are established, other species with a smaller demand can be added. Opportunities for speciality cut flower crops that are uniquely suited to Jordan's situation may exist.

Although the authors have a valid point, the crops chosen are considered commodities and the low cost producer(s) will expand to meet any increase in market demand. At present, the markets in Europe seem to be adequately supplied with the three crops. We believe serious consideration should be given to alternative crops. Specifying such crops is out of the scope of this project and any attempts would be pure conjecture.

Physical Plant

Greenhouses

Two types of greenhouses are currently being used in Jordan, tunnels and multispan structures. For many reasons we believe the multispan houses are vastly superior.

- The heat loss from the connected multispan is only about half that from the tunnel structures. The reason is obvious: there is only half the plastic area to loose heat.

- A more subtle advantage is that all workers are visible, making supervision a bit easier.

- Materials handling is also much easier.

- Collection of rain runoff from the gutters is also quite straightforward. This should be very attractive economically.

- Land use is much better. The multispan house can be planted very close to the sidewalls which increases space efficiency from about 50-67%. Also, the land between the tunnels is not wasted.

- Finally, passive ventilation is much better, particularly in

the newly designed multispan houses with top venting.

The big problem is of course the initial investment. Multispan greenhouses are initially more expensive.

Quality plants can sometimes be produced in tunnel houses but there are serious disadvantages.

- Passive ventilation is simply not sufficient for year round production.

- Positive ventilation is an alternative but is more expensive than in multispans. For example, in the common tunnel in Jordan, two fans with outputs of about 320 cubic meters/minute (approximately 1-1.5 horsepower) will be required to approach the outside temperature. Fans would be required about every 30 meters of house length. These fans must be turned on much earlier than those in a multispan because of the poorer passive ventilation in the tunnel.

- Pad and fan cooling systems (more details later) are rather impractical in a tunnel house.

Greenhouse Coverings

The only viable candidate is likely to be polyethylene film. Glass or polycarbonate structures generally require payback periods of twenty years or more. The following are the important criteria for selecting the specific covering.

- Light transmission should be as high as possible. The best films are now approaching 90% transmission for films of 200 micron thicknesses, when kept clean.

- Inflated, double layers of 100 micron films, securely fastened with aluminum extrusions, are commonly used in the United States. Double layers have two great advantages. Heat loss is only 50-70% of a single layer. Also the plastic is very tight and houses are designed to withstand snow loads of 98 kgs./square meter while the wind is blowing at 115 km./hr.

- High quality films with high light transmission can be obtained that last three years before replacement. Four year films are now available but are too new to have a track record.

- The choice of film type, thickness and number of layers will be determined by a trade off between higher production, due to higher light with single layers of quality film, and lower heat costs with the double layers. A choice must be made on an individual basis.

Greenhouse Heating

Since the optimum time for exporting the chosen crops is the winter and early spring, reliable, quality production will require the ability to heat the structures during these periods.

Year round production of carnations and roses will require heating systems. The energy needed per square meter/hour is dependent on: surface area of the structure, heat transmission coefficient of the covering, difference between the inside and outside temperatures, and wind speed. For example:

- Total exposed surface area, roof, sides, and ends = 1000 square meters (10,758 square feet)

- Outside temperature = 3.5° C (38° F) (mean low Jan. temp at Amman airport)

- Desired inside temperature = 15.5° C (60.5° F) (minimum air temp for proper rose growth)

- Difference = 12°(22° F)

- Heat transfer coefficient (U value) for double layer plastic = 3.42 kg.-cal/hr/meter^2/deg.C (0.7BTU/hr/ft^2/deg.F)

- 1000 meters^2 X 12 x 3.42 = 41,000 kg.-cal./hr (165,700 BTU/hr)

Assume that heating will be required for 10 hours per day for the months of November through April. The temperature differentials are those calculated from the mean minimum temperatures at the Amman airport, see table 1.

- November
1000 X (15.5 - 9.3) X 3.42 X 10 X 30 = 6.36 X 10^6 kg.-cal

- December
1000 X (15.5 - 5.1) X 3.42 X 10 X 31 = 11.03 X 10^6 kg.-cal.

- January
1000 X (15.5-3.5) X 3.42 X 10 X 31 = 12.72 X 10^6 kg.-cal.

- February
1000 X (15.5 -4.2) X 3.42 X 10 X 28 = 10.82 X 10^6 kg.-cal.

- March
1000 X (15.5 -6.1) X 3.42 X 10 X 31 = 9.97 X 10^6 kg.-cal.

- April

$$1000 \times (115.5 - 9.3) \times 3.42 \times 10 \times 30 = 6.36 \times 10^6 \text{ kg.-cal.}$$

TOTAL 57.26×10^6 kg.-cal.

Knowledge of the degree days for the period would allow a better estimate of the heating required. Table 1 has meteorological data from the Amman airport. Table 2 contains heat transfer coefficients (U values) for a number of structural materials. The lower the U factor the lower the heat requirement.

In addition, wind speed influences heat loss. For every 16 kms./hr increase in wind speed the heat loss increases about 10%. In the above case, if the wind were 32 kms./hr, multiply the total by 1.2 and the heat loss would now be 68,7 million kg.-cal.

Table 1. Meteorological data for Amman Airport

Month	Temperature degrees C Mean	Max	Min	Frost days (#)	Rain mm	Humidity (%)
Jan.	8.0	12.4	3.5	2.6	63.6	70
Feb.	9.1	13.9	4.2	1.6	63.1	67
March	11.7	17.4	6.1	0.8	44.0	60
April	15.9	22.5	9.3	--	15.7	50
May	20.5	27.7	13.3	--	3.7	39
June	23.6	30.8	16.4	--	--	37
July	25.1	31.9	18.2	--	--	40
Aug.	25.4	32.4	18.3	--	--	43
Sept.	23.4	30.7	16.3	--	6.5	47
Oct.	20.3	27.1	13.6	--	6.5	47
Nov.	14.8	20.5	9.3	0.2	29.4	56
Dec.	9.8	14.4	5.1	1.3	48.8	68
Mean/ total	17.3	23.5	11.1	6.5	275.2	52

Table 2. Heat transfer coefficients, U Factors

Material	U factors
Glass single layer	5.5 kg.-cal./(hr)(m^2)(°C)
Polyethylene single layer	5.6
Polyethylene double layers	3.4
Styrofoam 2.5 cm	0.7

The lower the factor the lower the heat loss. Divide the U factor by 4.88 to convert to English units.

Type and placement of heaters can be important, for example roses require a soil temperature of 18.3 degrees C but the air temperature can be three degrees lower. Therefore the best heat for roses is a system where the heat is supplied at ground level. Table 3 illustrates the possible savings.

Table 3. Possible savings with root zone heat

Temperature	Root Zone Heat	Overhead Unit Heaters
Outside air temp	-1° C	-1° C
Inside air temp at roof	15.5° C	26.7° C
Difference outside versus inside	16.7° C	27.8° C 66% more fuel

Root zone tubes carrying hot water are placed about 0.67 meter apart on the growing area. Roots are kept warm and the plant canopy is kept dry.

A simple technique to prevent stagnant pockets of air in the greenhouse is horizontal air flow (HAF). Small fans, 40-50 cm in diameter, with outputs of about 60 cubic meters/minute, are positioned in the ceiling of one bay and move the air in the same direction. The next bay in the multispan will have the same number of fans but moving air in the opposite direction. The pattern is repeated throughout the greenhouse. This keeps the air moving and the warm air doesn't collect at the top of the house. In addition, the air movement removes the moist air from

the area of the plants and reduces condensation on the leaves. Usually two fans/bay are required for every 30 meters of length.

Many newer greenhouses in the colder regions are installing heat curtains. These are drawn at gutter height at night. It is unlikely that the Jordanian winters are cold enough to justify this expense.

Greenhouse cooling

Simple ventilation with fans can at best bring the greenhouse to ambient temperature. Cooling will require taking advantage of the energy required to evaporate water. Two methods of accomplishing this are, pad and fans and fogging devices.

Pad and fan cooling consists of pulling air with a fan through a wet pad and in the process evaporating water. This cools the air since the water requires 8100 BTU's of heat energy per gallon to go from the liquid to the gaseous state. A properly designed system can reduce the dry bulb temperature inside the wet wall to approximately 85% of the difference between the outside dry bulb and wet bulb temperatures. Obviously the lower the humidity, the more efficient the cooling system. The humidity figures in Table 1 suggest that evaporative cooling would be very effective in the Amman area. The cross flow system is preferred since it does not require baffles to keep the cool air at crop level. Calculating the pad and fans sizes are straight forward but tedious and depend on local factors such as humidity, wind speed, length of the house etc. Reference one contains the address to obtain, free of charge, two manuals pertinent to environmental control.

Two types of pads predominate, paper and aluminum. Both are honeycomb structures that maximize the surface area. Metal ones are much more expensive but should have a very long lifetime. An elegantly simple and inexpensive design was developed by ITG Hannover and is shown in Appendix A. There is little data on the performance of this system in the real world but it seems promising. The report describing the research on this system is also in Appendix A.

A related technique for cooling is a high pressure fog system. Here high pressure water is forced through small openings that generate billions of tiny aerosol sized droplets which evaporate quickly and remove heat. Since fog and pad and fan systems both rely on the same principle, the minimum achievable temperatures are theoretically the same. Both in principle produce the same relative humidity increases.

The advantages of fog systems over pad and fan are:

- More efficient use of water.

- Fog systems can be adapted to passive and positive ventilation designs. For example, a roof ventilated greenhouses with fogging capabilities would reduce or remove the need for fans. Systems like this are in operation in the newer ranges.

- Cooling is more uniform with fog systems. Pad and fan greenhouses will show at least a 3° C difference between the two ends.

- Fog systems can be adapted to apply pesticides. The billions of droplets give excellent coverage and the labor to apply the chemical and the exposure of workers is reduced.

The disadvantages of the fog system are:

- The water must be very clean, no particulate matter at all.

- The electrical system must be such that the fog does not cause shorting.

Cooling and proper humidity provides substantial benefits for rose growers during the summer months. For example:

- Five to 10% increases in stem length.

- Increases in quality, sometimes as much as 25%.

- Increases in yields of 15 to 20 per cent per growing cycle.

- Fewer problems with powdery mildew.

Carnation growers should benefit from the cooling by reducing heat stall and improvements in quality.

We believe that some form of evaporative cooling will be an absolute necessity for year around production.

Packing Sheds and Postharvest Facilities

The packing shed and head house for a 5-hectare range must be large enough to contain a 500 square meter grading room, a cooler of 175 cubic meter capacity, training rooms, repair and maintenance areas, offices, lunch rooms etc. In Colombia this range would employ just under 100 people.

Design and Layout of Range

The most efficient placement of buildings depends on too many factors to establish fixed designs. However, the design criteria can be defined.

- The long axis of the greenhouse should run in an east-west direction to maximize light input.

- The packing shed and associated functions should be positioned to reduce the distance that workers and materials must be moved. Although compromises with light input must be made, a packing shed with the greenhouses arranged in a circle around it is a very efficient design

- The range should be as far from field agricultural operations as possible. Weeds and other plant material around the greenhouses should be reduced. This will reduce the insect population and the transfer of these pests into the greenhouses.

- The range should be as close to a main road as possible to reduce large truck travel on secondary roads.

- Electricity, water and telephone (fax) service must be available. The power and water systems should have backup capabilities to prevent loss of the crop during a power outage.

- Appropriate space should be provided for employee training.

Growing Media

A proper growing media must provide the following:

- Support for the plant.

- Provide a reservoir for air, water and nutrients.

- Be readily available and reproducible.

- Be free of disease organisms and weed seeds.

Many materials can fulfill these criteria, in fact with proper external support excellent plants can be grown with no media.

Date presented in table 4 summarizes the important properties of potential media in relative terms, one is worst five is best. A rating of one does not mean that quality plants cannot be grown, just that it will be more difficult.

Table 4. Growing Media properties

Type	Water capacity	Air capacity	Buffering capacity	Ease of use	Cost	Overall rank
Native soil	3	1	5	1	1	1
Sand	3	2	1	3	2	4
Gravel *	2	5	1	5	2	5
Rockwool	5	3	1	5	5	3
Peat	5	4	2	5	5	3
Coir	4	3	2	5	5	3

*Any type of small stone or mineral products such as volcanic rock, expanded perlite etc can be used.

Native soil, particularity that found around Amman is the most difficult to manage because of poor drainage, poor air capacity and in reality, poor available water for the plant. The buffering ability of clay is both a blessing and a curse. This buffering often stops catastrophic mistakes but if something does go wrong, bringing the system back to the proper values can be very difficult. On the other extreme, materials like sand and gravel have no buffering ability and consequently conditions can be manipulated very quickly. Such systems require the knowledge and data to make proper decisions. Very good automated systems can be found to control these conditions.

All media can be used in beds designed to collect and reuse water. Savings of 30-50% of the water are possible. Such beds are simple and relatively inexpensive to build. The basic principle is to build a raised bed with a solid material as sides and plastic lining the bed. The bed has a drain pipe running the length of the bed to collect the water. Sides can be wood, concrete blocks or polystyrene boards etc. The beds also should contain the heating tubes.

A growing system called Nutrient Film Technique (NFT) has achieved some success in Europe and the United States. NFT uses plastic or metal troughs, often the aluminum gutters on houses, for delivering water and nutrients to the plants. The NFT technique merits very careful scrutiny but will require a means to support the plants.

Fertilizers and fertilization practices

Plants require the following elements for growth:

Major Elements:

Nitrogen (N), Phosphorous (P), Potassium (K)

Minor Elements:

Calcium (Ca), Magnesium (Mg), Sulfur (S)

Trace Elements:

Iron (Fe), Manganese (Mn), Zinc (Zn), Copper (Cu), Boron (B), Molybdenum (Mo)

Proper nutrition requires all these elements, in addition chlorine and silicon. Normal fertilizers often do not contain sulfur, chloride or silicon. Impurities usually provide the chloride and sometimes the silicon but care must be taken to assure a satisfactory supply of sulfur.

Fertilizers in North America and Europe must be carefully described on their labels. The three numbers, i.e., 20-20-20 represent the percentages of Nitrogen (N) Phosphorus (as P_2O_5) and Potassium (as K_2O) respectively. Also, the label will list the concentrations of the minor and trace elements. Labels also should the exact chemicals used to make the particular fertilizer. For example the nitrogen may come from potassium nitrate, ammonium nitrate, etc. The label also tells whether the trace elements are chelated (keeps them soluble) as just simple salts.

A very important characteristic of fertilizers is their ability to influence the pH of the media. Certain formulations cause serious increases in acidity, drop in PH, others are basic and cause the pH to rise, others have almost no effect.

Table 5 contains the commonly used formulations and the acidity and basicity of each. Acidity and basicity are expressed in pounds of calcium carbonate equivalent to a ton of fertilizer. For example, 1000 kgs of a fertilizer listed as "acidic, 100 kgs" would produce enough acid during use to require 100 kgs of calcium carbonate to keep the pH constant. Conversely 1000 kgs of a "basic 100 kgs" formulation would act as if 100 kgs of calcium carbonate had been added to the system.

Table 5. Fertilizer acidities and basicities kilograms of calcium carbonate equivalents per 1000 kilograms of fertilizer.

Fertilizer formulation	Potential acidity	Potential Basicity
20-20-20	297	
20-10-20	211	
15-0-15		210
21-0-20	8	
17-5-24	63	
24-8-16	346	
15-16-17	108	

The effect of fertilizers is very important. Various formulations can (must) be used to keep the pH at a proper level. This subject will be expanded later.

When using growing media other than native soil, it is very important to have the iron (Fe), manganese (Mn), Zinc (Zn), and Copper (Cu) as the chelate forms.

Most fertilizers do not contain calcium, magnesium and sulfur. If all these elements are not present in your water, media or fertilizer, then supplemental feeding is necessary

Water soluble fertilizers are designed to be applied as a solution and are completely and readily soluble. Slow release fertilizers are soluble to slightly soluble materials coated with a polymeric or sulfur coating. Such materials may be complete formulations, i.e., all elements required by the plant. They can have release times lasting from a few months to two years. The granular fertilizers are essentially the same as the slow release fertilizers except that they are not coated. Therefore they dissolve much more quickly and last a much shorter period. They do not last the life of even the shortest crops and must be reapplied often. This method is not recommended.

Water soluble fertilizers, applied as a solution, are by far the most common. The best procedure is constant liquid feed (CLF). The reasons are:

- Constant liquid feeding keeps the nutrient concentration around

the roots close to a constant level.

- Fertilizer formulations can be changed at any watering. For example, if the pH is too high, change to an acid fertilizer and vice versa.

- The minor elements, calcium, magnesium and sulfur can be supplied as needed.

- Concentrations and fertilizer formulations can be changed as the crop requires.

- The grower has the most control of the system with CLF.

Periodic liquid feed (PLF) has most of the advantages of CLF except that the concentration of nutrients varies from too high right after fertilization to too low just, before the next fertilization.

Both soluble systems require an injector. Consequently, there is little reason to do PLF.

Slow release fertilizers can also be used. The advantage is no additional fertilization is required. There are several disadvantages.

- The fertilizer must be mixed with the media. This requires mixing equipment. Surface application is possible but the point source watering systems would cause uneven release.

- Once the slow release fertilizer is there, the fate of the crop is sealed. Most of the control is lost since the fertilizer can't be removed.

- Control of pH is more difficult, particularity if the pH becomes too low.

Very high quality plants have been grown with a combination of CLF and slow release fertilizer. Small amounts of the slow release fertilizer buffers the system and provides nutrients when the person doing the watering forgets to turn on the injector.

Overall, constant liquid feed is the preferred method.

The concentrations of CLF solutions depend on the crops, time of year, etc. As a rule the following should be appropriate.

- Hydroponics, gravel, sand, rockwool as a media: 100-200 ppm N.

- Soil, peat, coir: 200-300 ppm N.

Irrigation - Piping Systems

One method of irrigation seems most appropriate for cut flowers grown on the floor. This would be polyethylene perforated tubes, running the length of the bed. The following are generalizations on the design of the system. Appendix B, contains the information for quantitative design.

Care must be taken to design the system so that the plants near the input hose do not get over watered or the plants at the end of the run, under watered.

Irrigation - Injector Systems

Many types of good fertilizer systems are available. The flow rate, injector rate, number of different fertilizers or acids to be injected etc., are the criteria used to select an injector. Reference 2 contains information on many of the injectors commonly used in North America.

If acid is to be injected, make sure that an acid compatible system is chosen. Generally acid injectors must have special components.

Injector systems can be fitted with in-line monitoring equipment. The most basic measures pH and electrical conductivity (EC is an indirect measure of nutrient concentration). More sophisticated equipment can monitor nitrogen, both nitrate and ammonium, and automatically adjust the pH, EC and nitrogen content. In principle all elements could be measured on-line but this is probably not necessary.

Growing media affects the fertilizer composition required, the concentration and frequency of fertilization etc. In addition the leach fraction, the proportion of water that drains past the plant root zone and is lost, determines the rate of salt build up in the soil. Leaching is the method of controlling the salinity of the medium.

Media with high buffering capacity (clays) often require much higher phosphorus levels in the fertilizer. For example a 20-20-20 formulation is often used with native soil while a 20-10-20, half the phosphorus, is perfectly acceptable for peat and coir. Pure hydroponic systems, gravel, sand and nutrient film techniques, can use fertilizer compositions very close to the plants' own elemental ratios.

If a system is used where the excess water, leachate, is collected, periodic analysis of total composition of the leachate must be made and the appropriate adjustments to the elemental ratios carried out.

Water Quality

The materials dissolved in the water can be a significant part of our fertilizer program. Consequently, a program should not be planned without knowing the composition of the water.

Contrary to popular belief, the pH of the water is unimportant. The most important criterion is the alkalinity, or the ppm of calcium carbonate/liter. This represents the buffering capacity of the water. The lower the alkalinity, the easier it is to change the pH. High alkalinity waters require large amounts of acid to lower the pH.

Choice of fertilizers is strongly influenced by alkalinity. High alkalinity waters need highly acid fertilizers and vice versa. See table 5 for the relative acidities and basicities.

Often the water can supply enough calcium, magnesium for the crop. Sulfur is generally lower than optimum in concentration. If the water does not contain these elements, the grower must provide them.

Rainwater is very difficult to use because it has no buffering capacity. This allows large, quick swings of the pH in non soil media.

The best waters are those that have alkalinities in the 100-200 range. In fact, if acid is used, only enough should be used to reduce the high alkalinity to this level.

Table 6 contains desirable ranges for irrigation water values and is presented below.

Table 6. Desirable ranges for irrigation water values in ppm.

Measurement	Range	Measurement	Range
pH	5-7.5	Fe	0-5
Soluble salts	0-1 mmho/cm	Mn	0-2
Alkalinity	0-100 mg/l of CaCO	Zn	0-5
NH_4-N	0	Cu	0-.2
NO_3-N	0-10	B	0-.8
NO_2	0-1	Mo	0-.02
P	0-5	Na	0-30
K	0-10	Al	0-5
Ca	20-80	F	0-1
Mg	10-20	Cl	0-80
SO_4	40-200	Li	0-.1

Waters that have higher levels of most of the nutrients can still be safely used but care must be taken to keep the proper ratios and keep everything below phytotoxic levels.

Alkaline water can be neutralized by acid using the following general guidelines. Table 7 contains the calculated amounts of acid required to lower the pH of one cubic meter of water to the 5.8-6.2 range. At these pH levels, approximately 65-75% of the bicarbonate will have been neutralized. Always check the pH after acidifying since the rates are only approximations because of differing water qualities.

Table 7. Acid (ml) required to lower pH of one cubic meter of water.

Acid type	Alkalinity (mg/l calcium carbonate)						
	50	100	150	200	250	300	350
85% phosphoric	39	88	127	176	215	264	492
93% sulfuric	20	39	59	78	98	117	127
37% nitric	88	176	264	361	450	537	628

Analytical Requirements

The minimum equipment is a good pH meter and a good electrical conductivity meter. These cost 150-200 US$ each for satisfactory meters. If not done on site N, P, K, analysis should be quickly available. Routine, complete soil, water fertilizer, and tissue analysis should be done on each cultivar on the following schedule:

Type	Frequency
Water	twice/year, unless source changes
Fertilizer	every six months
Soil	bimonthly
Tissue	monthly

Any growth problems should prompt immediate analysis.

Table 8 contains the generally accepted ranges for the various nutrients in native soil and soilless media.

Table 8. Acceptable nutrient ranges.

	Clay & Sandy Soil (1)	Soilless mixes (2)
PH	5-7.0	5.5-6.5
EC mmhos/cm	0.2-2.0	0.75-3.5
	PPM (3)	
Nitrate (NO_3-N)	8-100	40-200
Ammonium (NH4-N)	5-35	2-40
Phosphorus (P)	30-100	5-60
Potassium (K)	150-350	40-360
Calcium (Ca)	400-2000	50-250
Magnesium(Mg)	100-300	25-125
Iron (Fe)	5.0-50.0	0.3-3.5
Manganese (Mn)	8.0-50.0	0.03-3.5
Zinc (Zn)	0.5-1.0	0.3-3.5
Copper (Cu)	1.0-12.0	0.001-0.6
Boron (B)	3.0-20.0	0.06-0.6
Molybdenum (Mo)	6.20-50.0	0.02-1.5
Sulfur (S)	NE	50-250
Aluminum (Al)	5-20	NE
Sodium	1-60	NE

1) Values are from a 1:1, 0.01 CaCl2 extract

2) Values are from a saturated paste extract

3) Values are parts per million (ppm) in the extracts

N.E. = Standards not established.

The elemental tissue values (low, sufficient, high) for carnation, roses and gypsophila are found in Table 9. Values

outside the sufficient range, are not necessarily harmful but adjustment should be considered.

Table 9a. Tissue nutrient levels for *carnation* - 5th and 6th leaf pairs from flowering shoots.

Element	Level		
	Low	Sufficient	High
	percent	percent	percent
N	2.9-3.19	3,20-5.20	>5.20
P	0.20-0.24	0.25-0.8	>0.80
K	2.00-2.79	2.80-6.00	>6.00
Ca	0.60-0.99	1.00-2.00	>2.00
Mg	0.15-0.24	0.25-0.70	>0.70
S	0.20-0.24	0.25-0.80	>0.80
	ppm	ppm	ppm
B	25-29	30-100	101-135
Cu	5-7	8-30	>30
Fe	31-49	50-200	>200
Mn	31-49	50-200	>200
Zn	16-24	25-200	>200

Table 9b. Tissue nutrient levels for *rose* - most recently developed 5 leaflet.

Element	Level		
	Low	Sufficient	High
	percent	percent	percent
N	2.80-2.99	3.00-5.00	>5.00
P	0.21-0.24	0.25-0.50	>0.50
K	1.10-1.49	1.50-3.00	>3.00
Ca	0.80-0.99	1.00-2.00	>2.00
Mg	0.21-0.24	0.25-0.50	>0.50
S	0.20-0.24	0.25-0.70	>0.70
	ppm	ppm	ppm
B	25-29	30-60	>60
Cu	4-5	7-25	>25
Fe	50-59	60-200	>200
Mn	25-29	30-200	>200
Mo	0.06-0.09	0.10-0.90	>0.90
Zn	15-17	18-100	>100

Table 9c. Tissue nutrient levels for *gypsophila* - most recently fully developed leaves.

Element	Level		
	Low	Sufficient	High
	percent	percent	percent
N	3.50-4.29	4.30-6.00	>6.00
P	0.25-0.29	0.30-0.70	>0.70
K	2.80-3.49	3.50-4.50	>4.50
Ca	1.50-2.59	2.60-4.00	>4.00
Mg	0.30-0.39	0.40-1.00	>1.00
S	0.20-0.24	0.25-0.70	>0.70
	ppm	ppm	ppm
B	22-24	30-60	>100
Cu	6-8	7-25	>25
Fe	40-49	60-200	>200
Mn	40-49	30-200	>200
Zn	15-17	18-100	>200

Table 10. Corrective procedures for various nutrient disorders.

Deficient nutrient followed by fertilizer to add and rate (g/l)
P - Switch to a fertilizer containing N-P-K for the continual program or one application of diammonium phosphate (2.4 g/l) or monoammonium phosphate (2.4 g/l)
Ca - Switch all or part of the nitrogen source to calcium nitrate
Mg - magnesium sulfate (epsom salts) at 2.4 g/l
S - magnesium sulfate at 2.4 g/l
Fe - iron chelate or ferrous sulfate at 0.3 g/l
Mn - manganese chelate or sulfate at 0.15 g/l
Zn - zinc chelate or sulfate at 0.15 g/l
Cu - copper chelate or sulfate at 0.15
B - sodium tetraborate at 0.038 g/l
Mo - drench once with sodium or ammonium molybdate at 0.2 g/l

Insect Control

This is one of the most difficult, dangerous, and unpleasant but important jobs in this industry. Many excellent descriptions of insecticides, miticides and fungicides exist. One of the best is the publication of Drs. Lindquist and Tayama at the Ohio State University in Columbus Ohio. This pamphlet covers all biocides registered in the U.S., the organisms they control and their shelf life. The pamphlet is organized alphabetically by target organism. A copy of this document is found in Appendix C.

The best procedure is to reduce infections with screens, proper sanitation, humidity control etc. This must be coupled with diligent scouting and the use of sticky cards, both blue and yellow, to catch an infestation as early as possible. This permits spot spraying with the obvious advantages. Someone must be able to identify the insect or disease to determine the proper chemical.

The following types of sprayers are in common use:

- High volume sprayers. These use pumps to generate small droplets of a dilute pesticide, fungicide solution. The leaves are generally sprayed to run off on both sides. Very labor intensive.

- Ultra-low volume applications: Many ways are available to deliver very small aerosol particles of a concentrated solution (suspension) or the pure compound. The green house fogging system for cooling can often be used. Various aerosol generators operating on different principles can be turned on at night and cover very large areas without an operator.

- Electrostatic sprayers, either backpack or trailer mounted, can be used effectively to cover both sides of the leaves with sub micron size particles. Low volume applicators are preferred but there are times when only a high volume spray will do the job.

Data presented in table 11 compares high volume and low volume applicators.

Table 11. Ultra-low volume application versus standard manual sprayer.

Factors compared	Standard Hydraulic Sprayer	Ultra-low Volume Sprayer
Cost US$	$1500	$4500
Applications/yr	52	52
Application time, employee hours/1000m^2	5 hrs.	Zero hrs.
Employee hours/five years	1300 hrs.	Zero hrs.
Labor rate	$7,5	N/A
Labor costs/five years	$9750	N/A
Total costs	$11250	$4500
Chemical exposure	yes	no

A new systemic insecticide, one absorbed into the plant from the soil solution, is now available in the United States. If these types are available in Jordan, they can be a preferred method.

Disease Control

Covered under specific crops sections of this report.

Integrated Pest Management

This is the use of biological controls and chemical controls with the aim to reduce the chemicals. Progress is being made but zero insect results are not likely to be possible.

Sanitation

Sanitation pays!!! In fact, high quality flowers are very difficult, if possible, to grow without proper sanitation. Disease is reduced and yields improved. Proper sanitation can stop the spread of a small, local infection, such as Xanthomonas, that can wipe out a whole range. Obvious procedures are as follows:

- All waste plant matter must be removed from the greenhouse and put far enough away to keep fungal spores from blowing back into the greenhouse.

- Soil should be sterilized after every planting. The total green house should be sterilized. The watering systems must be surface sterilized.

- Care must be taken to reduce the transfer of soil borne diseases from outside the greenhouse to the growing beds. Disinfection trays for shoe and boot sterilization are very helpful.

Starting Plant Material

The options are, produce your own starter plants from your stock or buy from a specialist producer. The advantage of producing your own is one of cost savings. However the possibility always exists that these plants may have contracted any number of bacterial, fungal, or viral. Often these diseases do not kill the plants but reduce the vigor, yields, production rates etc.

To assure quality and maximum production, the starter plants should be purchased from a supplier that guarantees the plants are from disease and virus free stock.

Producing your own starting material generally is a false economy. A few percent reduction in yield and/or quality costs more than the amount saved by growing your own.

Quality and Consistency

Quality, as defined and measured by both qualitative and quantitative standards, is an absolute requirement to sell into the EC market. Consistency and reliability are necessary to produce proper working relationships between the producer and the customers. Additional information about the subject of *quality* is presented in the postharvest section of this report.

Quality consists of both qualitative and quantitative grades and standards. The following are the quality standards for cut flowers for the Netherlands, Regulation 316/68

1.1.1 Definition of produce (flowers)

These standards shall apply to fresh cut flowers and flower buds of a kind suitable for bouquets or for ornamental purposes, falling within subheadings no. 0603 A of the Harmonised Commodity Description and Coding System (IIS)

1.1.2 Quality requirements

a) minimum requirements

Produce must have been carefully cut or picked, according to the species, and have reached an appropriate stage of growth.

b) Classification.

1. Class I

Produce in this class must be of good quality. It must have the characteristics of the species, and where appropriate, of the variety(cultivar).

All parts of the cut flowers must be:

- whole

- fresh

- free of animal or vegetable parasites and from damage caused by such.

- free of residues of pesticides and other extraneous matter affecting appearance.

- unbruised.

- free of defects of development; for carnations a split calyx is not considered a defect of development.

- in respect of American carnations, flowers with a split calyx must be ringed, put up separately in uniform lots and the packages marked accordingly.

- stems must, according to species and variety (cultivar) be rigid and strong enough to support the flower head.

2. Class II

This class shall include all produce which does not meet all the requirements of Class I

All parts of the cut flower must be:

- whole

- fresh

- free of animal parasites

The flowers may however, have the following defects:

- slight malformation

- slight bruising

- slight damage caused, for example, by disease or by animal parasites.

- weaker, less rigid stems

- small marks caused by treatment with pesticides

The permitted defects must not impair the keeping quality, appearance or utility of the products.

c. Extra class

Produce which qualifies for Class I without the aid of any quality tolerance may be marked ※Extra※. However, this classification may not be used for American carnations with a split calyx.

1.1.3 Special provisions

The special provisions for certain types of flowers set out in 1.1.1 a. shall override the provisions of this Annex.

1.1.4 Sizing

For cut flowers, sizing must comply with the following scale:

Table 12. Examples of flower codes and stem lengths.

Code:	Length
0	less than 5 cm or flowers marketed without stems
5	5-10 cm
10	10-15 cm
15	15-20 cm
20	20-30 cm
30	30-40 cm
40	40-50 cm
50	50-60 cm
60	60-80 cm
80	80-100 cm
100	100-120 cm
120	more than 120 cm

These lengths include the flower head.

The difference per unit of presentation (bunch, bouquet, box and the like) between the maximum and minimum lengths of the flowers in the unit may not exceed:

-2.5 cm for flowers in codes 15 and below;
-5.0 cm for flowers in codes 20 to 50 inclusive;
-10.0 cm for flowers in codes 60 and above.

This difference may be doubled for flowers presented in fan shape. For chrysanthemums with large flowers presented in fan shape, this difference may go up to 20 cm for flowers in codes 20 to 50 inclusive.

The size scale and the uniform lengths set out above are not applicable to mimosa.

The minimum length for branches of mimosa shall be fixed at 20 cm.

However, bundles and bouquets composed exclusively of small sprigs of a length less than 30 cm may be permitted subject to the words※short stem※ or an equivalent term being marked on the package.

1.1.5 Quality tolerances

Quality tolerances shall be permitted in each unit of presentation as follows:

1. Class I

Five percent of the cut flowers may have slight defects, on condition that the uniformity of the flowers in a unit of presentation is not affected.

2. Class II

Ten percent of the cut flowers may vary from the requirements of the class. Half this percentage may have been attacked by parasites of animal or vegetable origin. The defects must not impair the utility of the products.

1.1.6 Packing and presentation

a. Presentation (EC regulation 802/71):

A unit of presentation (bunch, bouquet, box and the like) must consist of 55, 10 or a multiple of 10 pieces.
However, this rule does not apply to:

- flowers normally sold singly;

- flowers normally sold by weight;

- flowers for which seller and buyer agree expressly to derogate from the provisions concerning the number of flowers in a unit of presentation. This derogation is admissible solely for transactions outside wholesale markets on condition that:

- the goods are the subject of a direct sale, based of a fixed selling price per unit of presentation, at wholesale level to a retailer or a person acting of on behalf of a retailer:

- the goods are accompanied by a bill, delivery note or similar document showing the above-mentioned selling price;

- the unit of presentation is in the packaging required by the buyer for the ultimate purchaser. This packaging must be such as to permit identification of the goods.

b. Uniformity:

Each unit of presentation(bunch, bouquet, box and the like) ,

must contain flowers of the same genus, species or variety(cultivar) and of the same quality class, and must have reached the same stage of development.

Mixtures of flowers or mixtures of flowers with foliage of different genus, species or variety(cultivar) are, however, permitted so long as products of the same quality class are used and that they are appropriately marked.

c. Packaging:

Packaging must protect the produce adequately. Paper or other materials in direct contact with the cut flowers must be new. The following particulars must accompany the goods:

a. Identification

-dispatcher or packer: name and address or code mark.

b. Nature of produce:

- genus;

- species or variety(cultivar) or color of flowers;

- where appropriate, the word ‘mixture’ (or equivalent term)

c. Origin of produce(optional)

- region of origin, or national, regional or local name.

d. Commercial Specifications:

- class;

- size(length code) or minimum and maximum lengths(optional);

- number or net weight.

e. Official control mark (optional)

f. Presentation (EC regulation 802/71):

If the number of flowers per unit of presentation does not correspond to the provisions of section 1.1.4.a., packages must be marked to show the exact composition of the units of presentation contained therein.

The quantitative quality standards are:

- Temperature:

Plants can be divided into two groups, those that store best at 0-2° C and those that require higher temperatures, 16.5 - 18.5° C. A quality producer will maintain the proper temperatures. Shipping conditions should be such that the customer receives the plants at temperatures between 0-10 degrees Centigrade or above 12 degrees Centigrade respectively.

- Cultivar names should be on all bunches.

- Flowers' name should be available.

- Transportation carriers name and bill of lading should be available.

- The proper number of stems / bunches.

- The proper number of flowers and flower buds / stems.

- The proper number of bunches must be received.

- Zero broken stems, flower heads etc.

- No damaged cartons or boxes.

- The bunch tie should be at least 10 cm up from the cut ends. The higher the bunch tie the greater the probability that all of the stems in the bunch will be re-cut. Any stems not re-cut will shorten the shelf life by 40-60%.

- All of the cut stems ends must be even and all touch a flat surface when stood on the cut end. Uneven stems show that the stems were not re-cut after they were bunched.

- Only the leaves that would be underwater are removed.

- Flowers labeled STS treated must have been properly treated. A procedure for testing this is in **section two** of this report.

- Stem length's match the length specified. Various quantitative measures for carnations and roses are shown below.

Table 13. Quantitative grade measurements for carnations and roses.

Carnations

Feature	Grade 1	2	3	4
minimum length (cm)	60	50	45	38
minimum flw dia. (cm)	6.9	5.6	5	5
stem strength	20°	20°	20°	20°
stem deviation/ curvature (cm)	1.25	2.5	2.5	2.5

Hybrid Tea Roses

Feature	Grade 1	2	3	4	5	6	7	8	9	10
minimum length (cm)	70	65	60	55	50	45	40	35	30	25
stem strength	20°	20°	20°	20°	20°	20°	20°	20°	20°	20°
stem deviation curvature(cm)	2.5	2.5	2.5	2	2	2	1.5	1.5	1.5	1.5

Cultural Procedures - Gypsophila paniculata

Propagation

Cuttings taken from vegetative plants can be rooted in 10-14 days under mist and temperatures around 21° C. Grafting is no longer common. The cuttings should be grown under short days (less than 12 hours of light) at 10-12° C. The cool temperatures promote branching.

Gypsophila species flower during long days (12 or more hours of light). Flowering is inhibited by days shorter than 12 hours. Plants should be kept under short day conditions until the plant has at least 12 nodes, this should occur 3-5 weeks after

transplanting. Stem length and quality are greatest under very long days, 16-18 hours of light. Continuous lighting is best. Incandescent light in preferred.

If the rooted cuttings are kept at 0-2° C for 7 weeks in the dark, the plants become vernalized. The vernalized plants will flower without long day treatment. However, the stems will be stronger and more stems will be produced if both vernalization and long day treatments are carried out.

Greenhouses are required for winter and spring production. Temperatures should never go below 13° C. Plants should be in double rows. Plants should be spaced 0.46-0.51 meter apart and the rows should be about 1 meter apart.

Little has been published on fertilization regimens in the greenhouse. Gypsophila does have unusually high requirements for calcium and magnesium. Ample sources should be provided. Overall gypsophila is not considered a heavy feeder. Constant liquid feed of 100-150 ppm N should be sufficient. Periodic analyses are necessary to maximize yields.

The growing media should have a high drainage rate and air capacity.

The following are some popular cultivars.

- Bristol Fairy with its white double flowers is still the standard cultivar in the United States.

- Perfecta is more vigorous and has larger white flowers than Bristol Fairy and is one of the most popular cultivars in the United States.

- Flamingo is very popular in Europe.

- Pink Fairy is a double flowered pink cultivar.

- Red Sea has double flowers of rose-pink color.

- Single is the native Baby's breath and is grown from seed.

- Snowflake or Double Snowflake is also seed propagated and has 50-60% double flowers.

Stems should be cut with 60-70% of the flowers open if they are going to the fresh flower market. If immediate local sales are wanted, 80-90% of the flowers should be open. This is also true if the flowers are to be dried. Plants may also be harvested in tight bud, 5-10% open, and opened in a bud opening solution.

Each plant can produce from 45 to 80 stems per year. There are

usually 15 to 20 stems per bunch.

Gypsophila is attacked by Agrobacterium gypsophila. This results in soft, nodular galls about 2.5 cm in diameter. Botrytis cinerea causes ash-grey spots on buds and stems. Damping off also occurs and is caused by Pythium debaryanum and Pellicularia filamentosa. Appropriate chemical controls are available for the fungal diseases. Sanitation is the best preventive for the bacterial infection.

Cultural Procedures - Dianthus caryophyllus (standard types)

Year round production in Jordan will require greenhouses with effective environmental controls. High light and cool overall temperatures are desirable. Night temperatures of 10-13° C and day temperatures of 18-24° C produce the highest quality product. Ventilation and/or cooling will be necessary during the May through October period. Heating will be required from November through April.

Well drained, growing media are required for carnations. Media with low air capacities will quickly cause root damage and increase the susceptibility to other diseases and reduce overall vigor. Excellent crops can be grown in gravel, volcanic tuff, perlite, sand etc. A pH between 6 and 6.5 is best and should never be allowed to go above 7. Drip irrigation with continuous liquid feed is the norm. Carnations are considered heavy feeders, particularly calcium, nitrogen and potassium. A 20-10-20 formulation with supplemental K, Ca, and Mg during production will produce an excellent crop. Tissue analyses should be used to monitor the fertility program.

Rooted cuttings are planted on a 15 X 20 cm spacing. If 67% of the greenhouse area is used for ground beds, the range will contain about 1,116,300 plants/5 hectares. Each plant will produce between 10 and 20 stems per year depending of cultivar, pinching practices, growing conditions etc. Approximately 15-20% will be below standard grade. In Colombia, about 9,000,000 salable stems are produced per year per 5 hectares. Of these, some 30% are select, 55% are fancy and 15% are standard.

Pinching should be done about one month after planting. Plants should have four to six sets of leaves after pinching. Do not try to pinch all plants at the same time, pinch only those that are ready. This is a critical operation and must be done properly to yield a plant with a good production potential. Two to four layers of support wires are generally used. The first is positioned 15-25 cm above the ground. Subsequent layers are spaced 30-40 cm apart.

Specifying particular cultivars is not prudent at this point.

There are still too many unknown variables. The choice should be made on market desirability and production economics. Some general characteristics to consider are:

- Percentage of long stems

- Amount of head splitting

- Fusarium and other disease resistance

- Color and uniqueness

- Flowers produced per plant per year

Carnations are sensitive to most fungal diseases. Fusarium oxysporum is perhaps the most serious. No controls are available other than proper sanitation throughout, including media sterilization and clean cuttings. Fusarium roseum, Alternaria, stemphyllium and rhizoctonia also infect carnations. Fortunately several fungicides can be used to control these diseases. Red spider mites, thrips and aphids will cause distortion and damage growing tips, foliage and flowers. A proper spray program is required.

Cultural Procedures - Rosa odorata (hybrid tea types)

Rose production requires more attention and control of environmental factors, fertility and pest management than any of the other major cut flowers. This has forced growers to a specialist position with large ranges containing only roses.

Roses require as much light as possible except during the brightest times of the year. The greenhouses should be situated where there is no shading from outside sources. Plastic with the highest light transmission is important and it should be kept clean. Adequate climate controls, including heating, cooling, ventilation and humidity control are required. Carbon dioxide enrichment contributes to both yield and quality.

Spacing rose plants and rows very greatly depending on cultivar, growing environment, and the like. A common practice is when roses are grown in beds about 1.1 meters wide. Four plants are spaced across the bed. The next row is about 0.305 meters down the bed. This spacing gives 10.8 plants per meter^2. At 67% space efficiency, 5 hectares would require 3.6×10^5 plants. These plants can be successfully cropped for five years with proper care and treatment during this period.

Many factors control the number of stems that each plant will produce. Cultivars differ in their production potential and cultural practices are very important. Normally the range is

about 25-30 stems per plant per year. This production of 2-2.5 stems per month can be maintained at this rate. It is generally prudent to peak the production around holidays. This is done by sacrificing the production before and after the holiday through cutting and pinching programs.

As mentioned earlier, roses require careful control of all the environmental factors. The heating system should maintain a minimum of 16° air temperature and a soil temperature of 18° C. The source of heat should be at ground level. Heating of the soil promotes circulation around the plants as the heat rises. Day temperatures can be in the 27-30° C range provided the light intensity is high and the humidity is in the 80% RH area. Cooling will be necessary during the hottest part of the year. A fog system is a way to accomplish both temperature and humidity control.

Most rose cultivars are patented and therefore growers should pay royalties. All roses are grafted on numerous root stock species. The selection of rootstock species is often as important as selecting the actual rose flower cultivar.

It is very important that the new crop gets off to a good start. Planting is generally done between January 1 and June 15. A preferred practice is to plant in January and February. Keep the bud graft at least 3 cm above the media level.

Roses are very heavy feeders and prefer a pH around 6.5. Control of pH is generally done through the use of fertilizers of various acidities or basicities. The first six weeks are crucial. During this period developing very good root structure is necessary. One practice is to water very thoroughly several times and then withhold water until the media is quite dry. Misting the top growth to prevent wilting during this period may be necessary. When the root system is developed, check this visually, regular watering practices should be begun.

All new growth must be pinched when buds appear. Pinch back to the 2nd 5-leaflet leaf. The new growth from this pinch should also be pinched. Never take a heavy crop from young plants. Rose plants should be growing at their maximum during the late summer and fall to ensure strong plants for winter production. An axiom is, build plants during this period and cut down on the wood during January through May.

Wire supports are necessary to support the plants. Enough layers to support plants up to 1.8-2 meters will be required.

Watering of any crop is very important. The distribution should be even and adequate to prevent any checking of growth. During the periods when there is a large amount of top growth the water requirements will be quite high. As the top growth is removed,

the watering will decrease, particularly in winter.

Disease and insect control also necessary to maintain healthy, productive plants. Red spider mites are the most serious insect pest and if not controlled the production and quality will drop quickly. High humidity and chemical sprays are necessary. Powdery mildew is the most significant fungal disease. Sanitation, elimination of condensed water on the leaves and fungicide sprays are generally called for. Do not spray or fog when the media is dry or leaf drop may occur.

Rose cutting is a very important part of rose production. Where one removes the rose from the plant largely determines the ability of the plant to produce subsequent crops. Many systems of cutting have been used, the most common being to cut to the second 5-leaflet leaf on the new wood. This will assure one of another rose within seven weeks from this cut. This type of cutting in the summer and fall will tend to build up the plants. The hooks produced by this type of cutting can be removed by cutting below the hooks in the late winter and spring months. Another method is to soft pinch all breaks as they appear and cut the rose back below the pinch. With this method of cutting, one will have a long stem and better quality, but production will be reduced.

During the spring and summer, knuckle cuts may be practiced on older wood, where cuts are made just above the branch and adventitious buds appear and develop; later these knuckles can be removed with the next cut.

Roses should be cut twice a day to assure that none will open on the plant and be allowed to develop. It is also important that beds be cut at the same time every day, since one or two hours will result in a lot of blasting. These roses cannot be held, but must be used immediately. A new method recently practiced is cropping roses by pinching specific benches in rotation.

SECTION TWO

POSTHARVEST CARE AND HANDLING

Introduction

By definition, "postharvest" refers to all aspects of flower care and handling after harvest. Included in the postharvest handling are procedures such as grading, bunching, precooling, storage, packing, chemical treatments and ethylene control. Flower harvesting is also included in the "postharvest" definition.

Many growers have the belief that once flowers have been harvested and shipped out of their facility that their job is complete. The saying "out of sight, out of mind" refers to this belief: once flowers are "out of sight" then growers do not have to worry about them. It is hoped that the information presented in this postharvest care and handling section of the report will disprove this belief. Without doubt, growers MUST be concerned about their flowers after shipment AND must therefore do everything possible to ship flowers that have been properly treated so they will perform well once in the hands of their customers and the ultimate consumers.

In order to provide Jordanian flower growers insights into why they must be concerned with postharvest flower performance, **"Part One"** of this section presents certain consumer and financial benefits for good postharvest flower care. These benefits were determined from research performed in the United States, Germany and The Netherlands. There is every reason to believe that the same or similar results are attainable by Jordanian flower growers as well as domestic and foreign consumers of flowers grown in Jordan.

"Part Two" of this section presents information explaining the principles of good postharvest flower care. Growers will learn the basics of flower care with emphasis on how factors such as ethylene, sanitation, temperature, relative humidity and time of harvest influence flower quality. Once growers know more about these basic factors, they should be more inclined to practice the precise flower harvesting and postharvest care procedures that are presented in **"Part Three"** of this section. Indeed, for many who read this report, the information presented in **"Part Three"** will become their blueprint or model (prototype) for proper postharvest flower care.

In **"Part Four"**, very specific and detailed information is presented for crops that have been reported to be important to the Jordanian flower industry. Growers are advised to read this section only AFTER they feel comfortable with, and understand, the information presented in the first three parts of this section of the report. The information presented in **"Part Four"**

is meant to supplement, but NOT replace, the information presented in **"Part Three"**.

Finally, **"Part Five"** contains some general information about a new classification of flowers call speciality cut flowers. Some of the species are good candidates for production in Jordan depending on growing and market conditions.

"Part One"

Flower and Plant Quality as Judged by Consumers

There is precious little information identifying flower quality factors that affect the buying decisions of consumers. Even worse is the all too common practice of the floral industry of ignoring available research findings and, instead, basing production and marketing decisions more on tradition than on consumer needs. Three examples of consumer-based research findings are presented below which demonstrate some limitations in the ability of the international floral industry to provide consumers with products they want.

1. *Rose color*: At least five studies have documented consumer preference for rose color. In all of these studies the findings were consistent: while red roses are popular with males, females generally prefer non-red colors about two to one over red. Since females generally dominate flower purchases, it is difficult to understand why growers still plant mostly red cultivars. Maybe the Jordanian flower industry can benefit from these findings?

2. *Rose sale units*: Selling roses in units of 10 or 12 is very common but many consumers prefer to purchase roses in smaller units of 3, 5, or 7 stems, or in combination with other flowers. Most consumers believe they are getting a better value for their dollar when roses are sold in units of less than a dozen and/or mixed with other flower types.

3. *Importance of fresh flower designs*: How important is the design of fresh flowers in determining if an average consumer will or will not purchase flowers? Not very important. Specifically, design considerations add up to only about 10% to 15% of the total buying decision whereas "quality" represents nearly two-thirds of the buying decision. The term "quality" was defined as being a combination of how long the flowers would last as well as their color. Hence, if flowers are perceived to last at least 6 to 7 days and the colors are pleasing, these two purchasing decision factors are about four to seven times more important than design aspects.

In conclusion, since the livelihood of every floral industry member worldwide is totally financed by consumers, we must make sure that the floral-related goods and services being provided are in fact the same ones judged desirable by consumers. The floral industry must be in a better position to translate flower quality characteristics into products and services consistent with consumer needs.

Because of its infancy, Jordanians have an opportunity to develop their flower industry based on consumer needs. It is unknown to

this author if this is happening. The decision to grow roses and carnations as two main crops for export suggests that this decision was made based on other factors, especially since the world market for these two crops is reported to be oversupplied.

Flowers and Human Well-Being

As humans become increasingly involved in the modern, fast track, instant gratification, high-tech, and computerized world, plants and flowers are becoming more important to us. Here are three examples:

1. *Communication and other behavioral modifications*: It has been verified by research that people communicate more effectively in the presence of flowers, the conduct of office workers is improved when flowers/plants are used as integral components of office designs and people tend to eat more food and eat at a slower pace when flowers are on the table.

2. *Stress reduction*: As stress increases in today's society, the incidence of certain diseases has been shown to increase, including mental disorders, hypertension and ulcers. Researchers have confirmed that stress can be reduced (as measured by decreased blood pressures and pulse rates) for individuals working with plants and flowers.

3. *Hospital stays*: Patients in rooms with window views of trees and other plants spent less time in the hospital, made fewer negative comments and needed fewer doses of pain killers than patients with views of brick walls. Flowers and plants in the room are believe to do the same.

Financial Rewards for Proper Postharvest Care

Commonly used (but entirely misguided) reasons for not treating flowers properly after harvest include:

- "My sales are so good that I don't have the time to treat them."

- "My flowers are so fresh that they don't need preservatives."

- "I don't want my flowers to last too long because my customers will buy flowers less frequently."

- "The cost of labor is so high that it is too expensive for me to pay someone to treat my flowers."

- "There is almost no benefit to treating flowers at grower level. In short, it is a waste of money."

- "My shrinkage (product loss) rate is less than one percent without having to fuss over these postharvest care procedures."

It has been well documented that implementing proper postharvest floral care procedures can result in substantial financial returns on investment. In addition, but harder to document, is the improved consumer satisfaction and resulting sales increases that will always be the biggest benefit.

Date in table 14 shows the some financial advantages of implementing fresh flower food dispensing systems to improve flower quality and reduce losses at "retail" level. Grower level studies have not been performed as extensively but the same types of results can be expected. The data is presented in US dollars.

Table 14. Some financial advantages at retail level.

Description of savings/cost area	Savings/(cost) per $1000 in sales
Depreciation for hardware	$ (1.93)
Flower care products used	(3.45)
Reduction in store flower losses (shrinkage)	14.70
Reduction in flower replacement purchases	11.20
Total net savings by using flower care procedures	$ 20.52

Note that an investment of only $5.38 ($1.93 + $3.45) per $1000 in retail flower sales resulted in a net $20.52 increase in the bottom line. Labor costs are not included as <u>less</u> labor (not more) is actually utilized because the additional labor of handling bad flowers is eliminated.

It is easy to understand how the proper treatment of flowers can reduce losses. Since flowers look better for a longer time period, there is a greater chance that these products will be sold and not end up in the garbage. In the above example, savings averaged $14.70 per $1000 in sales for reduction in fresh flower losses only.

Not be so obvious are the savings resulting from the reduction in flower replacement purchases. Since fewer flowers are being discarded, fewer replacement flowers have to be purchased. The $11.20 savings noted above is often an unexpected windfall.

The following statements are more examples of actual results obtained by floral companies who implemented proper postharvest

flower care procedures:

- "Carnation shrinkage was reduced from 15.1 to 9.5%."

- "Customer complaints concerning roses in general were reduced by 21%."

- "Customer complaints about floral arrangements of all types decreased by 38%."

"Part Two"

Production (Grower) Factors/Decisions Affecting Postharvest Life

It has been estimated that 70% of the potential end user life (vaselife) of flowers is predetermined at harvest, regardless of the subsequent care provided by wholesalers, retailers and consumers. While this estimate is difficult to document, there is no doubt that grower decisions are critical to the well being of floral crops. Review the following factors that can influence flower life at consumer level yet are already determined by the time they take possession of the flowers.

Species and cultivar grown: Most flowers grown commercially are termed cultivars and are identified by single quotation marks such as 'Royalty' rose and 'Star Gazer' lily. Many of these cultivars are patented thus legally distinguishing them from other flowers.

Cultivars are developed for certain quality traits such as color, form, disease resistance and size. Breeders might develop a rose that has a wonderful fragrance but at the same time, knowingly or unknowingly, one with a short end user life. It is not unusual that even though all roses may have been grown, harvested and handled all the same, they do not have equal vaselife.

Published information detailing the postharvest performance of most cut flowers and plants is lacking. Regardless of the availability of published information, one way growers can learn which cultivars perform satisfactorily after harvest is to:

- 1) Run tests to determine which cultivars perform best.

- 2) Sell flowers by cultivar names in order to be in a position to receive specific cultivar performance feedback from all members of the floral industry as well as consumers.

- 3) Run tests on new cultivars.

- 4) Purchase flowers only by cultivar names.

In summary, all members of the floral industry **must** learn and use cultivar names when buying and selling floral crops. Gone are the days when it was sufficient to order "red" carnations or "yellow" chrysanthemums. Ordering flowers by flower color is no different from buying a "red" car, regardless of the brand or model. Only when cultivar names are known and merchandised can the floral industry ascend to its full sales potential. Thus, ALL flowers sold by the Jordanian flower industry should be identified by cultivar name.

Growing media (physical and chemical properties): This subject was presented in other sections of this report as related to the growth of flowers. However, it must be understood that growing media can also greatly influence the postharvest performance of cut flowers. For example, flowers grown with too much nitrogen (especially ammonium types) are more susceptible to postharvest diseases and therefore often have shorter vaselife.

Flower maturity at time of harvest: Cut flowers harvested too immature or too mature will have reduced postharvest quality. Presented below are examples of how harvest maturity can influence postharvest performance for many flowers:

- Carnations harvested just before the petals reflex will ship with less mechanical damages, produce less ethylene, are less sensitive to ethylene and more stems can be packed per shipping container than flowers with reflexed petals.

- Chrysanthemums harvested when flowers are from two-thirds to three-quarters open are more likely to develop completely and will also last longer than those harvested earlier.

- Daffodils are best harvested when in the pencil (upright) to gooseneck stage (bent over to about 45 degrees) stages.

- Tulips should be harvested in the "green bud" stage.

Checking Flower Quality

All flowers grown and sold are identified in one way or another in terms of quality. Not only are these quality items described (mostly by the seller), but they are almost always described in positive quality traits. Have you ever seen growers advertise that they have inferior quality flowers for sale? Yet, we have all seen poor flowers for sale.

Research has revealed that consumers are interested in learning about floral products in objective terms, not by subjective descriptions. In addition, growers should describe the flowers they sell using at least some objective terms. A review of both subjective and objective quality measurements presented below should demonstrate the importance of objectively monitoring floral items.

Subjective: Synonyms include personal, individual, private, biased, partial, emotional and prejudiced. In other words, no two people can subjectively rate the quality of flowers and plants and come up with the same rating because each has unique biases, emotions, prejudices, etc.

Subjective flower quality measurements that are often used

include color of flowers and foliage, odor, freshness, sheen and degree of firmness and turgidity. While these factors are important, individuals making these measurements will almost always come up with different answers. One of the best measurements to demonstrate the limitations of subjective analysis is color.

There is no doubt that color is one of the keys to success in the floral industry. Mother Nature has provided many wonderful colors and color combinations in flowers, fruit and foliage. However, it is subjective when attempts are made to describe color.

Objective: Synonyms include concrete, fair, unbiased, real, impartial, open-minded and candid. Thus, if the quality measurements are truly objective then everyone taking the measurements should come up with the same answers. Thus, every person at grower level should be able to inspect flowers and arrive at the same conclusions about quality. Too often workers examine flowers subjectively, concentrating on factors such as color and "feel".

A listing of some objective quality measurements are presented below. These measurements are often taken at the time the products are received. Growers must also be aware of these measurements and make sure that the flowers they are shipping are of high quality as measured OBJECTIVELY!

- Flower temperature.

- Cultivar names.

- Grower names.

- Transportation carrier's name and bill of lading.

- Number of stems per bunch.

- Number of flowers and flower buds per stem.

- Number of broken stems, flower heads, stems, etc.

- Number of damaged cartons or boxes.

- Location of bunch tie on cut flowers relative to cut stem ends.

- Number of cut stem ends per bunch of flowers that are on one plane such that all of the stems come in contact with a flat surface.

- The percentage of leaves remaining (or removed).

- Have the flowers been properly STS treated?

- Stem length.

Detailed explanations as to the importance of certain of these objective measurements are presented below.

1. *Temperature*: Flower temperatures prior to shipment should be recorded by date, time, person taking the readings, and flower type (cultivar name if available). Such findings must be written down and saved for future reference, especially if claims are made on these flowers at a later date.

Generally, flowers that store best near zero degrees C should be between 1 and 3°C at the time of shipment. For chill sensitive flowers such as heliconia, ginger, croton and anthurium, temperatures under 12 to 15°C can be too low.

Keep track of flowers that are outside of the recommended temperature ranges as damage may not be apparent for 2 or 3 days. Namely, note those flowers that are below 1 or above 10°C for ones that store best near zero, and those that arrive below 10 or above 25°C for chill sensitive ones.

The temperature measuring device must have a needle-like probe for insertion into the flower base or center of a bunch. This type of temperature probe is available from supply companies for greenhouse, laboratory, chemical or electronics. You can contact your local refrigeration dealer and ask them for sources.

To use the temperature probe, gently insert the probe tip into the base of a flower or in the middle of a bunch. Remember, it is the flower temperature that is important, not stem temperature.

2. *Inventory count*: An inventory count should be taken and recorded. Record and isolate any obviously damaged product. Broken stems and/or flower heads are easily counted.

3. *Name*: Are the flowers identified by cultivar name? Remember, not all red cars are the same, just as all red carnations or roses are not of equal quality.

4. *Bunch tie location*: Is the location of the bunch tie at least 10 centimeters up from the cut stem ends? The higher the bunch tie, the greater the probability that all of the stems in the bunch will be recut by your customers. Any stem not recut will lose about 40 to 60% of its potential life.

5. *Cut stem ends*: Do all of the stems in a bunch come in contact with a flat surface? If not, recutting every stem in the bunch is more difficult for your customers. Uneven stems also

indicates that the stems were not recut after they were bunched. Any possible treatment given to these flowers after bunching was most likely less effective for those stems not recut.

6. *Leaves remaining*: What percentage of leaves are remaining? Generally, the more leaves remaining on flower stems the less likelihood of wound-induced stem damage, and, with some species, the longer the expected flower life. It is best if flower processors remove only those leaves that would be under water.

7. *Anti-ethylene treatment*: Ethylene is a gas that can kill flowers. Therefore it is important to determine if the flowers are identified as having been treated with an anti-ethylene treatment like silver thiosulfate (STS). If so, the question still remains as to whether or not they were treated properly. You may want to occasionally use the "Apple (ethylene) Test for STS Effectiveness" described elsewhere in this postharvest care section of the report. Unless you can prove to yourself using the "apple test" that the flowers have been properly STS treated, you should not sell the flowers.

Grades and standards

This subject is covered in other sections of this report. A few general comments are presented here.

In an attempt to make quality measurements as objective as possible, some associations throughout the world have developed and/or are developing grades and standards for floral products. A primary motivation for these efforts has been and continues to be the improvement of communication between buyers and sellers. In short, to help ensure that buyers are getting what they want and at the same time making sure that sellers are properly meeting the needs of their customers.

Jordanian growers must be informed of the specific grades and standards (if any) in the countries where they want to export their flowers. They must then comply to these criteria prior to making shipments to these countries.

Temperature Effects on Postharvest Performance

Introduction: Small changes in temperature can have dramatic effects on the rate of physiological processes. In general, a process will be 2 to 4 times faster if the temperature is increased 10°C. On the other hand, a process will be 2 to 4 times slower if the temperature is decreased 10°C. Data in the following tables exemplifies these changes.

Table 15. Effects of temperature on flower deterioration rate and vaselife.

Temperature (degrees C)	Relative deterioration rate	Relative life (%)
0	1.0	100
10	3.0	33
20	7.5	13

Using the above data, a carnation held at 10°C instead of its proper storage temperature of 0°C will deteriorate at least 3 times faster.

Transpiration: Most flowers contain about 80 to 95% water. Water serves many functions such as flower temperature regulation and nutrient uptake through roots as well as providing the medium in which every biological reaction takes place within flowers.

Transpiration is the loss of water vapor by flowers. Flowers would die because of temperature extreme if water were not lost in this cooling process. Also, if water is not lost from flowers, solution cannot be pulled up through the stems. Since transpiration takes place mostly through small openings (stomata) in leaves, some flowers sold without leaves are more prone to bent neck problems (i.e. gerbera) or don't benefit much from fresh flower foods because they do not take up very much solution (i.e. anthurium).

Transpiration is needed for proper postharvest performance of flowers but also must be controlled to prevent wilting. When the rate of water loss is greater than water uptake, flowers wilt, a process which indicates serious problems. High temperatures and high air movement can increase transpiration rates and hasten wilting.

Respiration: Even more dramatic are the effects of temperature on respiration. Respiration is the process whereby food and oxygen is converted to energy, heat, water and carbon dioxide. Every living entity respires or it dies.

As respiration rates increase in plants, food reserves are used up and flower and/or plant life can be reduced. Data presented in the following table exemplifies temperature effects on respiration rates.

Table 16. Respiration rates (heat production) of carnations and roses at different temperatures

Temperature (degrees C)	Relative rate of respiration	
	Carnation	Rose
0	1.0	1.0
20	24.6	28.3

Compared to temperature effects on transpiration, the relative rate of respiration (and also heat production) of the carnations and roses represents a much more realistic picture of what happens to flower quality when the temperature is too high. For example, it is not uncommon for flowers which should be held in near zero degrees are held for part of their postharvest life at or near 20°C. Both roses and carnations respire about 25 times faster at 20°C than at 0°C. One could postulate from these data that every hour at 20°C is equivalent to 24 hours at 0°C. Hence, if a flower like a rose can be successfully stored at 0°C for 10 days, holding these flowers at 20°C for only five hours could effectively cut the total possible storage time at 0°C in half.

Other research results have shown that carnations stored at 5°C for 14 days had their subsequent vase life reduced by over 65% compared to carnations stored for 14 days at 0°C. Yet, many people in the flower industry are very happy with flowers held at 5°C. Unfortunately, most growers would also be happy if their carnations and roses were shipped at 5°C. Maybe one should reconsider these perspectives.

Ethylene: Regarding ethylene and temperature, data presented in the following table exemplifies how ethylene and temperature interact to influence flower quality. In short, as temperature increases, lower ethylene levels are required to cause flowers to die prematurely. While this data is impressive, ethylene levels as low as 0.03 ppm at 20°C can cause flower problems. Thus, it is very important for Jordanian flower growers to make sure that flowers are held at proper temperatures to reduce ethylene-induced problems.

Table 17. Concentration of ethylene and exposure time resulting in unacceptable carnation flowers at various temperatures

Temperature (C)	Exposure time	Ethylene (ppm)
0	4 days	2.6
5	2 days	0.9
20	6 hours	2.8
30	12 hours	0.37

Ethylene Effects and Control Measures

Historical considerations: In 1609 a Belgian chemist discovered that gasses released from heated coal could be used to produce a flame. Nearly 200 years passed before a German engineer used this knowledge to construct the first manufacturing facility to produce gas to light homes, businesses and streets. Known as illuminating, coal or manufactured gas; its commercial production and use became routine throughout many industrialized countries during the 1800's.

The first association with plant growth came in 1864 when it was reported that shade trees defoliated in the presence of leaking underground illuminating gas pipes servicing street lamps. It wasn't until 1901 that ethylene was determined to be the active component of illuminating gas causing plant growth disorders.

Effects on flowers (general): Countless articles have documented how this gas became known as the "death hormone" of flowers or, as many believe, the major postharvest enemy of the floral industry. Some negative flower and plant responses to ethylene and examples of plant species affected include:

- Premature loss of foliage (ficus, azalea, rose, citrus)
- Premature loss of flowers (geranium, snapdragon, impatiens)
- Premature loss of fruit (holly, pepper, citrus)
- Premature flower death (carnation, kalanchoe, cattleya)
- Petals becoming translucent (alstroemeria, gypsophila)
- Development of adventitious stem roots (tomato, mum)
- Petiole (leaf stalk) twisting or epinasty (poinsettia, tomato)

- Stem thickening (pea, mum, petunia, tomato)

- Foliage yellowing (mum, impatiens, petunia, lily)

- Premature fruit ripening (apple, pear, banana, kiwi, cucumber)

Sources and levels required: While illuminating gas is not a common ethylene source today, there are many sources of ethylene including:

- Exhaust from internal combustion engines (i.e. cars, trucks and non electric powered forklifts).

- Many pollutants released into the atmosphere are contaminated with ethylene, even cigarette smoke.

- Plants commonly grown as floral crops are capable of producing and releasing ethylene, some more than others.

- Many fungi and some bacteria often associated with floral crops produce ethylene.

- Flowers that are under physical, water, insect, disease and other stresses often produce increased amounts of this gas.

- Incomplete combustion and poorly ventilated heaters located in tight greenhouses (often double-poly or in any greenhouse type during very cold nights due to ice forming over normal air leaks) can produce ethylene.

As noted earlier, the ethylene amounts required to cause problems depend on many factors including temperature, exposure time, plant condition and species susceptibility. Ethylene-induced damages occur at very low concentrations, about 20 to 30 parts per billion to as "high" as 1 to 3 parts per million.

Plant synthesis/physiology: All living plant cells have the capacity to produce or synthesize ethylene, some more than others. Generally, reproductive tissues (flowers and fruits) produce much more ethylene than leaves and stems.

Flowers do not distinguish between ethylene produced within from the gas coming from one of the many external sources. An important and common flower response to ethylene is the production of even more ethylene.

Flower exposure to ethylene, regardless of the source(s), is only one concern. It is equally important to know if this gas will now attach itself to ethylene "action" sites located in plant cells. Only when ethylene molecules are attached to such "action" sites will the resulting disorders be induced. Hence, not only do we have to be concerned about the production of this

gas, we also have to understand and be able to control these so-called "action" sites as will be explained shortly.
Ethylene sensitive crops: ALL floral crops can be damaged by ethylene, some more than others. Since species and cultivar sensitivity differences are common, it would be impossible to predict the absolute ethylene sensitivity of any flower under all conditions. With this understanding, a listing of the more ethylene sensitive floral crops is presented below:

Table 18. Some ethylene sensitive flowers listed by common and generic names.

Achillea	Dicentra	Queen-Annes-Lace
Aconitum	Digitalis	Ranunculus
African Lily	Doronicum	Rosa
Agapanthus	Eremurus	Rose
Alchemilla	Eustoma	Rudbeckia
Allium	False-Dragonhead	Saponaria
Alstroemeria	Foxglove	Scabiosa
Anemone	Freesia	Silene
Anethum	Geraldton-Waxflower	Snakehead
Antirrhinum	Gladiola	Snapdragon
Aquilegia	Gladiolus	Soapwort
Asclepias	Globeflower	Speedwell
Asiatic-Lily	Godetia	Spray-Rose
Astrantia	Gypsophila	Stock
Baby's-Breath	Ixia	Sweet-Pea
Bellflower	Kniphofia	Sweet-William
Bleeding-Heart	Lady's-Mantle	Sweetheart-Rose
Bouvardia	Larkspur	Sword-Lily
Brodiaea	Lathyrus	Throatwort
Buttercup	Lavatera	Torch-Lily
Butterfly-Flower	Leopard's-Bane	Trachelium
Campanula	Lilium	Tree-Mallow
Carnation	Lily	Triteleia
Catchfly	Lily-of-the-Nile	Trollius
Centaurea	Lisianthus	Waxflower
Chamalaucium	Loosestrife	Windflower
Chelone	Lysimachia	Yarrow
Clarkia	Masterwort	
Columbine	Matthiola	
Coneflower	Miniature-Carnation	
Cornflower	Montbretia	
Crocosmia	Onion	
Cymbidium	Oriental-Lily	
Daucus	Ornamental-Onion	
Delphinium	Peruvian-Lily	
Dendrobium	Phlox	
Desert-Candle	Physostegia	
Dianthus	Pincushion-Flower	

Controlling ethylene-induced disorders: Regardless of the species, cultivar and environmental conditions, there are a number of steps that can be taken to reduce ethylene-induced disorders. These steps are now briefly delineated:

1. *Sanitation*: Since some fungi and bacteria can produce this gas, it is imperative to not only keep the plants disease free during production but also to keep areas clean where flowers are graded, packed, stored or shipped. In addition, discard old or dying plants, flowers and related debris as these items are potential ethylene sources.

2. *Temperature*: As noted earlier, the higher the temperature, the less ethylene produced by plants and the less it takes to induce plant disorders. Whenever possible, store and ship flowers at the lowest possible temperature without inducing low temperature (chill or freeze) disorders.

3. *Species/cultivar*: Grow only those species and cultivars that are less sensitive to ethylene. Common plant selection and breeding programs have led to the introduction of many cultivars that are ethylene resistant. In addition, recent advancements in genetic engineering have provided renewed hope for the widespread introduction of ethylene resistant plants in the near future.

4. *Damaged flowers (mechanically- and pest-induced)*: Most flowers when damaged, either mechanically and/or by insect and disease attack, respond by producing ethylene as a part of their defensive mechanism. The ethylene produced can in turn shorten the end user life of the damaged flowers as well as other flowers in the same area but not under attack. To minimize these types of damages, it is important to handle flowers gently and to keep them as free of insects and disease organisms as possible. The process of sleeving can cause mechanically-induced damages and, as a result, increased ethylene production.

5. *Controlling ethylene "action" sites*: As noted earlier, ethylene by itself will not cause problems unless it is attached to the so called "action" sites at which time the plant disorder is induced. Silver from silver thiosulfate (STS) products can prevent or "block" ethylene from attaching to these "action" sites and thus prevent the negative disorders from starting.

In this report, STS is only recommended for use with ethylene sensitive flowers that are being exported to countries that allow such treatments. For example, The Netherlands does not want silver treated flowers to enter their country.

6. *Inhibitors of ethylene synthesis*: Two anti-ethylene product types are now on the international market which, under the proper conditions, can inhibit or reduce the ability of some flowers to

produce ethylene. While these products can be beneficial, inhibitors of ethylene synthesis are generally less effective than STS-based products since they do not protect against external ethylene. However, some flowers do perform well in these solutions when external ethylene levels are low, especially species which have numerous flowers on the same stem at different maturity stages such as delphinium, miniature carnation and bouvardia.

7. *Scrubbers or filters*: Most are made with a purple colored chemical called potassium permanganate. These products have been available for about 20 years. Some flower sleeves have also been reported to remove ethylene. In addition, filtering systems have been introduced which utilize ozone and other chemicals to remove ethylene. The chemical effectiveness of these products are often marginal for the effort and cost. In many cases, exchanging inside (storage) air with fresh outside air has been shown to be more cost effective (see below).

8. *Air exchange/circulation systems*: In simple terms, most levels of ethylene in outside air are low enough so as to avoid flower problems. Hence, all one has to do is to devise a system where inside air is exchanged with outside at the rate of about one exchange per hour during non working hours. Normal people traffic during working hours generally allows for sufficient air exchanges. The cost of this system is the amount of energy required to cool or heat the incoming air.

Positive ethylene effects: It must be remembered that there are positive sides to ethylene and its effects on plant growth and development. As examples, ethylene controls and/or greatly influences numerous plant growth and developmental processes such as: flowering, pigmentation (color) development, fruit ripening, leaf abscission (fall) and cell enlargement. While ethylene is needed for flowers and plants to properly grow and develop, this gas often becomes a major problem for extending the life of crops after harvest.

Testing for STS Effectiveness: "Apple (Ethylene) Test"

There is no doubt that when properly used, STS can greatly extend flower life and reduce flower losses for a number of fresh cut flower species. However, data suggests that up to 80% of flowers that were supposedly STS treated were not treated properly.

The following "Apple (Ethylene) Test" was developed to objectively evaluate if flowers were properly treated with STS either at your greenhouse (packing shed) and/or by your customers.

We have always been told never to store fruit with flowers. Why?

Because fruit can give off ethylene and kill flowers. However, in this test we want to use the ethylene produced by apples to determine if ethylene sensitive flowers are being properly protected by STS. The following "Apple (Ethylene) Test" will demonstrate these points.

To perform this test you will need:

1. One or two ready to eat apples that are at room temperature. The apple(s) will serve as the ethylene source.

2. One 25 or 30 liter plastic waste paper basket similar to the ones often used in kitchens.

3. Two flower vases that are of the proper size to hold at least five flower stems per vase and at the same time are small enough to fit into the waste paper basket.

4. One bunch of flowers that have been supposedly treated with STS by your own personnel. While any ethylene sensitive flower listed previously could be used, standard carnations are probably the easiest flower to test for STS effectiveness. Hence, the "apple test" described below is for carnations but can be easily modified for any ethylene sensitive flower species.

To perform this test:

1. Label one vase "air" and the second "ethylene".

2. Fill both vases with a fresh flower food solution.

3. Out of this bunch of supposedly STS-treated carnations, select two groups of five flowers.

4. Cut the flower stems short enough so they will fit into the waste paper basket. Do not remove any leaves.

5. Place five flowers in one vase and five flowers in the second vase.

6. Place the apple(s) next to the vase labeled "ethylene" on a table and cover this vase and apple(s) with the inverted waste paper basket.

7. Leave the "air" vase of flowers uncovered but near the inverted waste paper basket.

8. The apple or "ethylene" vase of flowers should remain under the waste paper basket for 24 hours at room temperature.

9. At the end of the 24 hour period, remove the waste paper basket and dispose of (eat!) the apple.

10. Monitor the end user life of the flowers in each case by recording the date each flower is not longer acceptable. Average these end user (vase) life numbers for the flowers in each vase.

Possible test results are:

1. Both the "air" and "ethylene" flowers die within a day or two. This means that the flowers were bad to begin with and you should repeat the test.

2. Flowers from both vases last for an equal number of days, normally 10 days or more. This means that the flowers were properly treated with STS.

3. The flowers treated with ethylene died sooner than the ones held in the air. This means that the flowers were not properly treated with STS. Unfortunately, this result is all too often common. Change flower sources or plan to use STS.

4. Regardless of the results, retest numerous times until you are sure of the findings.

Hydrating ("Hardening Off") Fresh Cut Flowers

Hydrating is the process by which water and other ingredients are rapidly introduced into flowers to make them turgid. Factors that can influence this process are described below.

Stem anatomy: Xylem, phloem, vascular bundle, vessel, tracheid, pith, sieve plate, pit and stele are some of the terms which describe the food and water conducting systems of plants. For the purpose of this manual, only the xylem will be discussed.

Xylem is the principal upward (and horizontal) water conducting tissue in flowers and plants. Made up mainly of tracheids and vessels, these cells are dead at maturity. Individual cells of various lengths are connected end to end to form continuous "pipelines" throughout the entire plant.

In simplistic terms, xylem can be viewed as thousands of tiny straws connected end to end. In general, the length of these straw segments are in the range of few centimeters or less. What could be described as filters or valves are located at the points where the straws connect to one another. These filters or valves can influence what passes from one straw to the next. Specifically, microorganisms and air bubbles are restricted from movement through these filters or valves.

Role of dirt, debris, microbes and air bubbles (embolisms): In healthy flower species prior to harvest the plant root system provides clean water to the xylem tissue. Once flowers are

harvested, any and all of the inhibitors of water movement in xylem can become a factor in reducing the flower life.

Air bubbles can form immediately upon cutting and they form later as the flower losses water when being held dry. Dirt, debris and microbes can enter xylem tissue at any point in the marketing channel due to normal handling.

Accumulated dirt, debris and microbes in xylem can be greatly reduced by cutting off about two to five centimeters of stem tissue, either in air or under water. On the other hand, there are four possible ways to rid the xylem of air bubbles in order to allow for the free flow of solution: cutting stems under water, placing stems in warm water, using a citric acid solution and/or placing flowers into deep holding solutions. Each of these procedures will now be explained.

1. *Cutting stems in air*: Removing from two to five centimeters of stem tissue can significantly reduce the levels of dirt, debris and microorganisms in xylem. This procedure can be performed using any reasonably sharp instrument (i.e. scissors, knife, paper cutter, pruning shears, etc.).

2. *Cutting stems under water*: Cutting stems under water results in most air bubbles being removed as well as the dirt, debris and microbe blockers. The reason is that the filters/valves located at the straw (xylem) ends prevented the air bubbles from traveling further up the stems. At the same time, no air is allowed to reach the newly cut stem surfaces because the stems are under water. Once recut, the flowers can be immediately removed from the water and placed into fresh flower food.

Flowers need only to be cut under water once within a given floral business. For example, retail florists should perform this procedure when processing. Once the flowers have been allowed to hydrate or "harden off" for about one hour at room temperature, the xylem should be full of water or whatever solution they were put in after cutting. These same flowers will not need to be cut again under water at time of sale or when being used for arrangements since the flowers should be full of water and thus have no room or "appetite" for air.

Unless flowers are stressed excessively, cutting flowers under water during processing at grower level may not be required. However, this process should be tested by every grower in Jordan, especially during the warmer growing times of the year.

3. *Placing stems in warm water*: Normal tap water contains a certain amount of dissolved air. If it weren't for this phenomenon, fish could not survive as they use this air to breath. When water is heated to about 40°C (bath temperature water), some of the air normally present is driven out of the

water. When this warm water is allowed to cool, it begins to reabsorb air. It is believed that when flowers are cut in air and then placed into warm water followed by allowing the water to cool, potentially trapped air at the cut stem ends will be redissolved back into the water phase and thus rid the flowers of blockage caused by air bubbles.

4. *Citric acid solution*: Placing flowers recut in air into a citric acid/water solution (about pH 3.5) has been shown to help overcome air embolisms. The mechanism for this effect is unclear. See "hydrating solutions" below for further details.

5. *Solution depth*: The deeper the holding solution for flowers, the greater the "head" pressure created at the cut stem ends. This greater head pressure can assist the movement of water into the stems. Thus, flowers first cut in air and then placed into deep holding solutions have a better chance to revive than those placed into shallow solutions. This procedure should be used only for severely wilted flowers and/or under greenhouse conditions during very hot weather.

Cutting stems in air versus under water: If stems are not recut, either in air or under water, from 40 to 60% of the potential life can be lost. If embolisms are not a problem, there will be no end user life difference in cutting flowers in air versus under water.

Cutting stems on an angle: One is hard pressed to show any major advantages or disadvantages of cutting flower stems straight across versus on an angle. Do whatever is easiest.

Role of sugar: Sugar has been shown to retard water uptake. That is one reason why hydrating solutions do not contain sugar (see below). If flowers are very dry (wilted), don't place them immediately into a fresh flower food solution until they have been properly hydrated. However, once hydrated, flowers must be transferred to a fresh flower food solution which, by definition, contains sugar (food).

Hydrating solutions: Commercially available products are on the market which are intended for use as hydrating agents. Many of these product types are either citric acid- or aluminum-based. In addition, while not specifically available in a commercial floral product, chlorine from household bleach is also utilized. Each of these product types are now discussed.

1. *Citric acid versus aluminum based*: Researchers have demonstrated the benefits of low pH solutions (about pH 3.5) which could increase water uptake by roses and other flowers. After testing many acidifiers, citric acid proved to be the best. Citric acid is known to have a number of positive effects on flowers such as:

- May act as a germistat to control germ growth because of the pH.

- Can not only reduce solution pH but can act as a buffer.

- Can act as a chelator to hold and transport certain nutrients.

- Improves solution uptake.

- May act as a food source.

As a result of these findings/benefits, recommendations were made as to the proper way to make up and use citric acid solutions, especially for roses. However, it was soon learned that if proper sanitation procedures are not strictly adhered to, microorganism growth would occur. In addition, making one's own citric acid solution also requires the adherence to certain legal requirements in some countries not likely attainable by most floral companies.

Regarding aluminum, many of the earliest fresh flower foods contained aluminum mostly in the form of aluminum sulfate, a fact that still is true today. Researchers have demonstrated over the years the benefits of this compound including:

- Can act as a modest germistat to help control microbe growth.

- Can reduce solution pH.

- Can complex certain chemicals, ions, dirt, etc. out of solution.

- May influence stomata function and hence transpiration.

- Can influence flower color.

- Can influence water uptake.

The primary roles of aluminum- versus citrate-based products are quite different. Specifically, aluminum-based ones tend to slow down solution uptake in order to retard flower development. Citrate-based ones are designed to enhance solution uptake so as to prevent wilting or bent-neck (stem bending at the base of flowers) symptoms. Unfortunately, like most things in life, these differences are not always easy to differentiate and are not always consistent. The following research results and commercial experiences should help delineate some of these differences.

- Citric acid-based products have been shown to be the better performer while aluminum containing solutions were less consistent when used as a rose hydration treatment, especially

when stems were not recut later in the marketing channel. In short, if aluminum-based hydrators are used at grower level, the stems must be recut once the customer receives the product or reduced vase life is almost assured. The most likely explanation for this observation is that the aluminum flocculation (material coming out of solution or precipitation) causes a physical blockage to solution uptake at the base of the stems.

- Aluminum-based products are more susceptible to water quality changes as the aluminum solubility is very pH dependent.

- Citric acid-based products can be toxic to some flower cultivars at high concentrations.

- If flowers are placed in citric acid solutions for excessive time periods or under the wrong temperature conditions or if the flowers are old or have been improperly handled prior to treatment, rapidly opening flowers may result. While this definitely can be a negative attribute, it also is a good measurement of old and/or improperly handled flowers at the time of treatment. No chemical treatment can overcome aged flowers.

- The responses of roses to citrate- and aluminum-based products is often confounded by the cultivar being tested. For example, water uptake characteristics of three common rose cultivars 'Visa', 'Royalty', and 'Madame Delbard' are quite different and therefore responses to these products can be very different depending on the physiology of the flowers at the time of treatment.

- If one subscribes to the attitude of some growers that their goal is to make sure that flowers "look" fine at the time they leave their business and care less about end user life, aluminum-based products are often preferred since flower opening is delayed. In the same vein, if one knows they are dealing with old roses, they also are most likely going to prefer the aluminum-based products. However, in both cases, flower performance at consumer level can be unsatisfactory. Unfortunately, short term goals of certain growers sometimes outweigh the benefits of end user flower performance.

2. *Chlorine based hydrating solutions*: For decades growers have been adding various amounts of bleach (a solution of sodium hypochlorite) to flower buckets as a way to control microorganism growth and hence improve flower hydration as well as flower life. It should be tested on whatever crops are being grown at about 30 to 60 ppm chlorine. One crop of interest to Jordanians that does respond well to chlorine is gypsophila.

Fresh Flower Foods

Definition and benefits: Often called "cut flower preservatives", this product class is now often referred to as "fresh flower foods". This change in terminology is in response to consumer perceptions about these products. First, the word "cut" implies death, something "cut" off the mother plant. The substitute word "fresh" relates to today's image of healthy and wholesome items. Second, the word "preservative" often is identified with harsh chemicals and also suggests something artificial whereas the word "food" does not.

Fresh flower foods generally contain a food source (sugar) and substances to control the growth of microorganisms. Additional ingredients such as acids to alter pH, anti-ethylene substances and agents to precipitate out certain salts are also sometimes present.

As an analogy, certain non diet, citric acid-based soft drinks are somewhat similar to fresh flower foods because of the acid, water, sugar and the commonly added "preservative" (germicide) called sodium or potassium benzoate. This information is presented not to suggest that soft drinks be used for fresh flowers because they are not as effective, cost more and are not meant for that use. Rather, this analogy is presented to demonstrate that the chemistry of most if not all fresh flower foods is friendly, not dangerous or exotic.

The benefits of properly using fresh flower food solutions include:

- Food source for continued flower development.

- Controlling the growth of microorganisms to reduce stem blockage.

- Controlling pH (acidity) for maximum solution uptake.

- Overcoming any potentially negative effects of foam leachates.

- Providing substances for improved flower and leaf color.

- Keeping vase solutions looking clean for visual appearance. However, this advantage is not possible with brands which make the water cloudy by intention.

Level of industry use: Based on some research results as well as a partial understanding of fresh flower food sales, approximately 25 to 30% of all fresh cut flowers are being properly treated with fresh flower foods. Of the remaining, about 20% never are put into such products and the remaining 55 to 60% are placed into fresh flower food solutions that are made too dilute. When

fresh flower foods are made too dilute, there still is some sugar present which acts as a food source for microorganisms but generally not enough substances to control the growth of these same microbes. The end result can be that flower life can actually be reduced compared to placing flowers into plain tap water.

Effects on vase life: When used properly, flower life generally increases by 25 to 75% or more. Granted, some flowers seemingly benefit little from being placed into fresh flower food solutions. At the same time, almost no flower is harmed from their use. Therefore, it would be impractical and cumbersome to exclude a few flower species that do not respond favorably to fresh flower foods since there would be an increased probability that other flowers would be omitted from this beneficial treatment.

Effects of water quality: The effectiveness of all fresh flower foods can be influenced by the quality of the water in which they are used. There is no one easy test to determine which fresh flower food brand is best for any given water quality. What needs to be done are a series of flower vaselife tests using two or three fresh flower food brands with two water qualities: tap and deionized water.

Use flowers from the same bunch whenever possible for each test. Use at least four flowers per treatment. Treatments can consist of: plain tap water, plain deionized water, tap water plus brand A, deionized water plus brand A, tap water plus brand B and deionized water plus brand B. Additional brands can be likewise added.

Run this test for many weeks using numerous flower types before a final decision is made. If the deionized water continually out performs the tap water, contact a local water conditioning company that sells and/or leases deionization or reverse osmosis (RO) purification equipment to receive information about their product lines.

Powders versus liquids: Flowers don't know if these fresh flower foods are sold as liquids or powders. Therefore, let the fresh flower tests results noted above, ease of operation and cost considerations be the deciding factor(s) as to which type is best.

Dispensing systems: To help ensure the proper concentration, use automatic dispensing systems which utilize fertilizer injector/proportioning systems.

Making your own: Don't! There are some very straightforward reasons for this recommendation including:

- There are seldom savings to be made: it often costs more.

- There may be legal complications.

- Experience and equipment would most likely be lacking.

- Most likely the formula being used is not the best.

- The measured amounts of each ingredient will most likely be inaccurate to the point of rendering the solution less effective.

- Material safety data sheets (or similar documents) may be required.

Storage Considerations

Temperature: It is one thing to know the proper storage temperature for a flower, it is another issue to actually have flowers be at this temperature. Having a cooler operate at the proper temperature range by no means assures that the crops being stored are at this temperature. Thus, proper storage temperatures and effective heat exchange are required.

Cooler temperature should be within plus or minus 1-2 degrees C of the ideal flower storage temperature. An accurate and easy way to measure the average cooler temperature is to measure the water temperature in a 3 to 5 liter bucket held in the cooler. In addition, all coolers should have at least two thermometers to obtain temperature ranges within the cooler and have one thermometer as a control or check for the other.

Thermometers should be standardized at least once per year. A thermometer placed into a mixture of excess crushed ice made with deionized (DI) water mixed DI water should read 0°C.

Relative humidity: Generally, maximum relative humidity possible without having it "rain" in a cooler is best for flowers. A simple and effective approach to maximize relative humidity is to specify a minimum temperature differential ("TD" in refrigeration jargon) between the coils at set point and cooler air temperature. The smaller the TD, the higher the relative humidity. A good TD is about 2 to 3 C°. Coolers with low TD's cost more than the more common ones with TD's in the range of 5 to 8C°.

As important as low TD's are in successfully storing flowers, this subject is often a mystery to growers. It is therefore recommended that growers discuss this subject with local refrigeration personnel in order to fully understand the importance of having low TD's.

Special equipment to add humidity to cooler atmospheres can sometimes be beneficial. Care must be taken so free water does not develop on the flowers and plants being stored. In addition, if the coils are not matched properly with the humidifiers, the water added will be immediately removed by the coils, resulting in excessive ice formation on the coils. Remember, wet flowers and foliage will lead to more disease problems. The trick is to maximize humidity but keep the products dry.

For long term storage, it is better and easier to maintain high relative humidity by wrapping flowers in plastic after the products are cooled to their proper storage temperature. In this situation, it matters little what the relative humidity is in the cooler.

Precooling: Lowering flower temperature as fast as possible after harvest is referred to as precooling. Precooling can be accomplished using numerous systems including cold water (hydrocooling), low pressure (vacuum cooling), and cold air (forced air cooling). Forced air precooling is the most common one used for flowers in which cold air is pushed or pulled through packed flower boxes.

Growers and/or exporters should consider the installation of a precooler. It is recommended that growers work with individuals/companies experienced with precooler design and construction and not just with refrigeration companies. Precooler specifications and design can be obtained through the author of this section of the report.

Flower type and harvest stage: Not all flowers can be stored successfully. Those flowers which can be stored successfully generally require a specific flower stage development at time of harvest.

With most species, flowers should be harvested prior to full maturity. Terms to describe this harvest stage vary from species to species and include pencil (daffodil), green bud (tulip and hyacinth), white puffy (Easter lily) and tight bud or paint brush (carnation).

Some advantages of early harvest include less chance for physical damage, less ethylene production, less sensitivity to external ethylene and less susceptibility to fungal attacks.

Short versus long term: Long term storage is defined for flowers as storage time greater than three days. Short term storage is defined as three days or less. Most growers should therefore have cooler facilities designed for long term flower storage.

Wet versus dry storage: Most flowers store best dry if proper relative humidity and temperature conditions are maintained. If

cooler temperature is operating at 4°C or higher, flower species which normally store best at 0 to 2°C should be stored wet (in fresh flower food or hydration solutions), not dry.
Prestorage treatments: Prior to long term storage most flowers should be treated with either STS if they are ethylene sensitive and with a fungicide registered for the control of Botrytis.

Packaging: The importance cannot be over emphasized of having the flowers at their proper storage temperature BEFORE enclosing them in plastic to conserve moisture and maintain high relative humidity.

Light: Some flowers respond favorably to light during storage such as chrysanthemums. Light can reduce leaf and some flower discoloration and reduce some ethylene-induced disorders.

On the other hand, it has been reported that light can reduce the storage and postharvest life of cut roses. Upon closer examination of this data the real advantages of covering roses with black plastic to prevent the reported "negative" light effects was in reality the resulting increased relative humidity.

The logistics of providing this light is often too cumbersome to be worth the effort. Thus, one should not be concerned about lights in storage facilities.

Transportation Factors: Surface and Air

Except for very few air freighters, proper storage temperatures are not maintained during the air transportation phase of flowers. On the other hand, proper temperatures are frequently maintained in surface transport vehicles (truck trailers and inter-modal containers). The question then becomes, can the "speed" of the air transport overcome the lack of temperature control? Conversely, can proper temperature maintenance in surface transport systems compensate for slower delivery times?

The technically correct answer is that both air and surface systems can work if certain problems are eliminated. The biggest problem for air transport products occurs on the ground at airports as flowers wait for the originating or connecting flights in uncontrolled environments. On the other hand, surface shipments can suffer from improper loading which means that temperature management within the units is compromised.

Most surface refrigerated transport units were designed for maintaining broad temperature ranges within the units. They were not designed to alter product temperature. Recommended transport temperature ranges are often more of a compromise than an optimum for a given species.

Other factors which compromise the recommended transport temperature ranges include:

- Mixed commodity loads, the combining of species having different optimum storage temperatures ranging from 0 to 15°C.

- Flower boxes of various sizes and configurations loaded into the same transportation unit often result in poor air circulation. Poor air circulation translates directly to compromised product temperature management.

- Outside temperature extremes encountered during transportation cannot always be offset by the unit's refrigeration or heating system.

- The technical aspects of the refrigeration design itself including return air temperature control, common drive fan and compressor motor operation and top or bottom air discharge.

Paramount to transportation concerns is not whether the products will be delivered on time. Many in the floral industry have adopted the "just in time delivery inventory system" as evidence by the significant volume of flowers being transported by overnight air delivery companies.

It is assumed that flowers grown in Jordan would be exported almost entirely by air. The authors of this report are not experts in the logistical and possibly political ramifications of shipping flowers out of Jordan by surface modes, specifically trucks. If surface transportation is a possibility, every avenue should be explored to determine if sufficient markets are available for Jordanian grown flowers. Remember, flowers generally arrive in better condition when shipped by truck than air.

Diseases, Insects and Postharvest Crop Performance

Flowers are sometimes shipped infested with insect pests and disease. The presence of these organisms does not necessarily mean flower postharvest life will be reduced or otherwise rendered unsalable. What it does mean is that customers as well as consumers have to be aware that pests might be present and, if so, rectify the situation. And, flower shipments will be destroyed at the port of entry if pests are found by representatives of the importing country, a very expensive experience for growers and/or exporters.

Insects: Insects can render flowers more susceptible to postharvest stress conditions. In some cases this effect is very dramatic resulting in increased ethylene production with the concurrent myriad of ethylene-induced disorders. In other

situations the insect-induced damages are latent or hidden and may not show up for days or weeks later.

While many insects are easy to spot, others require magnification which becomes a control problem: one should only treat what one can see. Once seen, another concern is the proper identification of the insect(s) in question. Only when the insect type is known can proper control measures be initiated.

Diseases: Disease problems are generally much more severe than insects. Of particular importance is the disease organism Botrytis.

Botrytis is present on nearly every flower grown. Also referred to as "Grey Mold" because of its "fuzzy", grey appearance, this fungus requires free water (water film or drops) and damaged flower tissue in order to develop. Ways to help control this disease include keeping foliage and flower surfaces dry, providing good aeration in areas where flowers are held, use of fungicide dips and holding the crops at their proper temperature. In addition and whenever feasible, inform customers to loosen flower bunches and remove cut flower sleeves as soon as possible after arrival.

Sanitation

As with animals, exposing flowers to contaminated, dirty environments can result in the spread of diseases and shorten lives. The advantages of "keeping the place clean" should be obvious to growers. Yet, routinely washing buckets, coolers and the like are tasks seemingly foreign to all too many in the floral industry.

A simple way to determine if proper sanitation procedures are being used is to answer the following question.

"Are the flower buckets clean enough for growers to drink water from?"

If the answer to this question is "no", then the following sanitation suggestions will most likely be beneficial.

Flower buckets: All buckets used to hold or treat flowers must be thoroughly washed after every use which generally means at least once per week. Never put new flowers in with old and never in a bucket not previously washed. Use cleaning agents developed for the floral industry.

Flower storage coolers: The inside walls, floor and ceiling of coolers should be cleaned as often as one should clean a bathroom. Mold growing on cooler surfaces as well as flower and

plant debris can result in increased ethylene levels and increased chances of disease and insect spread.

Old flowers: Don't wait until tomorrow to discard old, broken and otherwise unsalable flowers. These same flowers which were once a source of revenue are now just sources of ethylene and other unwanted "guests".

Under water cutters: Change the water frequently which generally means at least once per day. None of us would like to take a bath in water already used by someone else so why do the same for flowers!

Fresh flower solutions: As explained in other parts of this report, make sure fresh flower solutions are made according to label instructions. Flower food solutions made too dilute is an invitation for microorganism growth.

Packaging Effects on Flower Quality

Flower packing procedures and products serve two main functions; to help protect the flowers from being damaged and to make it easier to move them from one location to another. While these two functions are important, packaging procedures themselves do not improve flower quality and in some cases may reduce end user life. Two negative examples of packaging procedures include:

- Promoting leaf and/or flower fall on a wide range of flower species caused by stimulating ethylene production and/or the lack of light.

- Trapping moisture which in turn can lead to Botrytis and other fungal problems, especially for sleeved flowers.

There is no doubt that packaging is required for the successful transport and marketing of flowers and that there are many more advantages than disadvantages. However, there are a number of misconceptions that deserve attention. Consider the following factors that can drastically influence flower quality.

- The placement of ventilation holes of any size and/or configuration on flower sleeves has not resulted in any appreciable difference in extending the postharvest life of these floral crops.

- Light colored shipping containers (boxes) are preferred because if placed in the light, the internal box temperature changes less rapidly as light (and hence heat) is reflected.

- Placement of ethylene-removing sachets in shipping cartons or the use of ethylene adsorbing sleeves has not always been worth

the added costs and also does not mean that end user life will be extended.

- The benefits of ice or gel ice in fresh cut flower boxes has been shown to be minimal under many shipping conditions.

- Just because the word "precooled" may appear on a flower box does not necessarily mean the flowers were properly precooled.

- The insulation effectiveness of flower shipping containers is limited by the tightness of the containers. The best insulation material in the world is rendered ineffective if openings are present between the inside and outside of the container.

"Part Three"

Harvesting and Postharvest Care Procedures

Introduction

The flower care procedures presented below have been properly implemented by numerous growers. "Properly" is the operative word since it takes just as long to properly care for flowers as it does to do so improperly. Thus, there should be no reason why Jordanian flower growers cannot do the same!

Don't be intimidated by the prospect of doing something wrong or that the procedures are too complicated. As you will soon learn, there are actually only TWO types of flowers and hence only TWO processing procedures which need to be implemented. What could be simpler?

Harvesting

Much has been published on when and how flowers should be harvested. Variables such as time of day, temperature, future flower use, intended export market, preestablished grades and standards and flower maturity can be very important.

Common sense tells us that flowers should be held in cool areas (like under shade) from the moment of harvest until they are in the grading room or cooler. What is not so oblivious is the extreme importance of harvesting flowers at the proper flower maturity.

Each flower species (and in some cases, each cultivar within the same species) has its own best maturity stage of harvest. It is beyond the scope of this report to make specific harvest stage recommendations other than to point out to the Jordanian growers how important this decision is in determining the future flower quality. Ask the breeders (suppliers) of the flowers you grow if they know the best harvest stage.

Handling Procedures Immediately After Harvest, Prior to any Chemical Treatments

Grading: Most grades are determined by stem length and to a lesser degree by flower size, two objective measurements. Additional grade determinations are often subjective and include factors such as flower and leaf color, physical defects, pest problems, etc. Growers should follow the guidelines established by the floral industries in the countries of export.

Bunching: All bunch ties should be placed at least 10 centimeters up from the cut stem ends. All cut stem ends should be even, on one plane, such that all stems in a bunch come in contact with a flat surface.

Product Identification: Sleeves should include cultivar name. Some grades and standards also require that other information be on the sleeves such as grower name and address and/or handling instructions.

Leaf Removal (Stripping): After grading and bunching, lower leaves can be removed using almost any leaf stripping device if:

- Bottom leaves are damaged or discolored.

- The added leaves interfere with packing.

- These leaves have been shown to increase water stress.

In general, assuming the above factors are not a problem, it is better to leave the leave on the flower stems. If leaves are to be removed, only remove those leaves that would be submerged under water in any subsequent treatment.

Treating Bunched Flowers with Solutions

After flowers have been graded and bunched, they are ready for any possible chemical treatment. Or, if no chemical treatments are deemed appropriate, flowers are ready to be precooled, stored and/or shipped. In order to be treated properly, flowers first must be identified (see below) as to which chemical treatments are to be used.

Identifying the Two Flower Types: In order to successfully use the procedures described below, flowers have to be categorized into one of two groups.

- *Group One*: Flowers that are generally sensitive to ethylene gas.

- *Group Two*: Flowers that are generally not sensitive to ethylene.

One way to go about this is to learn the smaller group: flowers that are sensitive to ethylene. These flowers have already been presented in this report. Make copies and display this list in your flower processing area for all to see and learn. Flowers not on this list should be considered as not sensitive to

ethylene and should be treated accordingly. Both ethylene sensitive and non ethylene sensitive flower treatments are described below.

Treating Ethylene Sensitive Flowers: Introduction

At the time of this writing, silver thiosulfate (STS)-based products are the only treatments available to counter the negative effects of ethylene action. The following procedures are therefore presented for STS-based products only.

Even though it is highly recommended and financially prudent to use STS-based products, some growers may choose not to use STS. Two choices are now available: use a product which inhibits ethylene synthesis or use no anti-ethylene product.

There are two products which inhibit ethylene synthesis. The active ingredients are aminooxyacetic acid (AOA) and aminoethoxyvinylglycine (AVG). Follow label directions if either of these products are used for ethylene sensitive flowers. In general, the product containing AOA is used in a similar fashion to STS-based products while the product containing AVG is used more like a fresh flower food solution.

If no anti-ethylene product (STS, AOA or AVG) is used, bypass the "Treating Ethylene Sensitive Flowers" information presented below and go to "Treating Non Ethylene Sensitive Flowers" directions presented next. In this case, all flowers will be treated as if they were not ethylene sensitive.

Treating Ethylene Sensitive Flowers: The Specifics

1. Treat the ethylene sensitive flowers listed previously in this report. Roses should be treated if they are to be held in storage for over 3 days, if they might be exposed to ethylene gas at some point after they are harvested, and/or if they are from warmer (summer) harvest periods. Otherwise, roses can be treated as non-ethylene sensitive flowers as described later.

2. Use a commercial STS solution according to label directions, preferably for a one or two hour treatment. Perform the "Apple Test for STS Effectiveness" to determine if the STS treatments are effective.

3. Treat flowers in buckets labeled "STS Only". Fifteen to 20 liter size buckets work well. When not in use, store STS solutions in a cooler at about 2-4 degrees C..

4. Prior to use, check to determine if the STS treatment solution for a 1 to 2 hour treatment is active using an STS Test Kit

available through Floralife of Burr Ridge, IL, USA. If a test kit is not available, make sure solution is at least not cloudy or contaminated with dirt and debris.

5. All STS treatments should be performed on flowers that have been held dry from harvest until being treated and after they have been graded, bunched and sleeved (if sleeves are used). If done properly, flowers should be in the STS solution within two hours after harvest. If flowers are placed in any type of solution (including water) prior to STS treatment, not enough STS solution will be taken up.

6. Cut flower stems in air or in plain tap water using any good under water cutter. Change the water in the under water cutter at least hourly to keep the under water cutting tub free of debris. It is dirty when you cannot see the bottom and/or when the water color becomes green. There is no advantage of using fresh flower or hydrating solutions in the tub.

7. Place flowers in the STS solution (made with cold water) immediately after recutting the stems. It is recommended that normal solution levels (i.e. 10 - 15 centimeters) be used as this will reduce the amount of unused STS solution being discarded. However, solution depth can be important for STS uptake. Flowers placed in deep solutions (up to the base of the flowers) will often take up solution faster than ones in shallow solutions. Care must be taken to keep deep solutions clean. The deeper flowers are placed into solutions, the greater the amount of dirt and debris washed off of the submerged stems and leaves.

8. Allow the flowers to stay in the solution for 1 to 2 hours at room temperature, 18 - 22 °C, and under normal room lighting (not in direct sunlight) conditions. The STS solution concentration used should be for a 1 to 2 hour treatment period at room temperature. If treating for longer or shorter periods and/or at lower temperatures, follow label directions.

9. After treatment, flowers are ready to be stored dry (packed or loose) and then cooled (precooled). Or, if flowers are wet stored, place the flowers directly into the proper brand (based on water quality) and concentration of fresh flower food solution and then into the cooler. Do not mistakenly think that flowers treated with STS do not benefit from fresh flower food. These are different solutions with different functions. The fresh flower food actually helps to maximize the benefits of STS.

10. Consolidate and filter debris from the used STS treatment solutions into as few silver marked buckets as possible. Filtering can be done using cheese cloth.

11. Store the STS treatment solution in the refrigerator (in the dark) when not being used. Discard old STS solution into an

approved silver collection device. These collection or filtering devices can possibly be obtained through some precious metal recovery companies. One can also contact local film developing companies for filtering information since they utilize the same STS chemistry and also have to collect silver.

Treating Non Ethylene Sensitive Flowers: The Specifics

The following procedures should be used for all remaining flowers, namely, those flowers that are not listed as being ethylene sensitive.

1. Cut flower stems in air or under water using plain tap water.

2. Place flowers into a hydrating solution OR directly into a fresh flower food solution, both made using cold water. As noted earlier, hydrating solutions are designed to enhance water uptake to restore crispness. Solution depth can be important for uptake, especially for hydration solutions. Flowers placed in deep solutions will often take up solution faster than flowers in shallow ones. Care must be taken to keep deep solutions clean. The deeper flowers are placed into solutions, the greater the amount of dirt and debris that will be washed off of the submerged stems and leaves. If using deep solutions proves to be of no advantage, use normal solution levels.

3. If hydrating solution was used, make sure label directions are followed. Transfer flowers to a fresh flower solution after the hydration step. This can be a very important step for some flower species (like roses) because hydrating solutions do not contain food (sugar) which flowers require for proper development and end user satisfaction.

4. Allow flowers to rest at normal room temperature and light conditions for about one hour in a fresh flower food solution prior to being packed or placed into the cooler. This procedure should be performed whether or not a hydrating solution was used.

Fungicide Dip

Flower species and cultivars that are either very sensitive to the fungus Botrytis and/or are going to be stored for over 3 to 5 days, may benefit from a postharvest fungicide dip after bunching and after either being treated with STS, hydration and/or fresh flower food solution(s). Two common fungicides used for this procedures are Ornalin and Phyton 27. After dipping the entire flower bunch in this solution, allow the flowers to drip dry in a cooler before packing. Flower species that respond favorably to this treatment include roses (whether stored or not) and carnations destined for long term storage.

Short Term Storage

Most flowers that are to be shipped within three or fewer days can be stored "wet" in fresh flower food solution or "dry" in a flower box with no polyethylene covering (vapor barrier). The few exceptions to this recommendation include water stress sensitive flowers like iris.

Long term storage (dry)

Flowers which are to be stored longer than three days first must be treated with the proper STS, hydration, fresh flower food and/or fungicide dip solution noted above. Then they should be placed in boxes lined with enough polyethylene so that all flowers in the box can be eventually enclosed within the plastic. Prior to enclosing the flowers with the polyethylene, the boxes containing the treated flowers (without lids) should be placed in a cooler overnight to facilitate heat removal. After the flowers are cold they need to be completely enclosed in the plastic. This dry storage technique should only be used when accurate and proper temperature control is possible.

Long term storage (wet)

This method should only be used when existing coolers cannot maintain temperatures in the 0-2 degree C range but rather maintain a high temperature (over 3-4 degrees C. Namely, flowers that store best at zero degrees C should be stored wet in fresh flower food solution only when warmer than these low cooler temperatures are attainable. Chill sensitive tropical flowers should always be stored wet at their proper temperature, generally around 12 to 14°C.

Additional Care Tips

The following information is presented to assist in the implementation of the processing procedures outlined above.

1. Most storage buckets (except for the ones marked "STS Only") should be marked on the inside between 12 to 20 centimeters from the bottom, depending on container size. Fresh flower food solution should be added to these levels.

2. Automatic fresh flower food dispensing systems should be used whenever possible to avoid incorrect fresh flower food concentrations. If made too dilute, fresh flower food solutions are often not as beneficial and may be more harmful than using plain tap water.

3. If scoops of powder and/or squirts of liquid are used rather than automatic dispensing systems, it is imperative to know the number of scoops or squirts per display and storage container. After the containers have been marked as described in item (1) above, measure the volume of water (in liters) required to reach this level. Follow label instructions to determine the number of scoops or squirts for each container size. Identify each container size by the number of scoops or squirts in addition to the fill line mark described above.

4. Unless otherwise indicated, use cold water to prepare all fresh flower food, STS and hydrating solutions. Warm water is generally not required.

5. Tropical flowers should be stored in a 12 to 14°C cooler or at room temperature if such a cooler is not available. Tropicals include heliconia, ginger, bird-of-paradise, anthurium, and many orchid species, although some orchids like certain cymbidium cultivars can be stored at temperatures below 12 to 14°C. Contrary to popular belief, protea are not of tropical origin and therefore can be stored at low temperatures along with carnations, roses, etc.

6. Have at least two temperature measuring devices in every cooler. Initiate a policy making it the responsibility of the store manager or flower processor to daily record the temperature in each cooler.

7. If the fresh flower food solutions are being used correctly, there is little advantage to periodically recutting the flower stems. On the other hand, the only three negative points of recutting are: additional labor costs, possibility of causing physical damage like stem breakage and the stems will get shorter and shorter.

8. Recutting flowers under water offers an insurance policy in extending flower longevity versus recutting in air. However, if flowers are recut in air and subsequently hydrate properly, there is no advantage to cutting them under water. In short, one cannot go wrong by recutting flowers under water as long as the water is kept fresh. No fresh flower food solution is required for this step, just tap water.

"Part Four"

After the previous three parts of this postharvest flower care and handling section have been read and understood, one now is ready to read this section. The care and handling information presented below is for some of the major flowers species thought to be of interest to Jordanian flower growers.

The information is presented at two levels:

- *Short summaries:* Growers desiring basic postharvest care information for major flower species are presented. The species covered are: agapanthus, alstroemeria, aster, gypsophila, bouvardia, carnation, miniature carnation, China aster, chrysanthemum, delphinium, larkspur, freesia, gerbera, iris, liatris, lily, rose, snapdragon, sunflower, sweet William and solidaster (yellow aster).

- *Detailed information:* The authors of this report have been advised that three flower species are of major interest to the Jordanian flower industry, namely, carnations, gypsophila and roses. Very specific and detailed postharvest-related care information is presented for these species.

Short Summaries

AGAPANTHUS, AFRICAN LILY, LILY-OF-THE-NILE

(Agapanthus africanus)

Ethylene sensitive: Yes.

Storage temperature (3 days or less): 2 -4 °C

Storage temperature (over 3 days): 0 - 2°C

End user life: 6 - 12 days

Special concerns: Premature flower fall caused mainly by ethylene, especially for immature flower buds. The common blue cultivar 'Mooreanus' is much less prone to premature flower fall than the white flowering 'Aldidus'.

Supplemental care and marketing tips: Some believe this species is chill sensitive and therefore should be stored at temperatures above 0-1 °C. Published research results contradict this and indicate storage near zero degrees C. However, they should be stored for less than 5 days to avoid severe reduction in end user life. Often grown as a herbaceous perennial in landscapes

throughout most temperate zones either as the more standard tall, cut flower-type or as dwarf cultivars. Most common flower color is blue but white flowered cultivars exist. It is commonly grown as a house plant in South Africa. It does very well when planted in a large tub such as a half wine barrel.

ALSTROEMERIA, PERUVIAN LILY

Alstroemeria spp.

Ethylene sensitive: Yes.

Storage temperature (3 days or less): 2-4°C

Storage temperature (over 3 days): 0-2°C

End user life: 6 to 14 plus days (varies greatly by cultivar)

Special concerns: Ethylene-induced damages include transparent petals and flower fall. Leaf yellowing is also a problem, it is cultivar specific and can be enhanced by using some fresh flower foods. It is easier to use cultivars that do not exhibit leaf yellowing than to have to treat them with anti-yellowing solutions, solutions that are often hard to locate. Grow and purchase cultivars that are less ethylene sensitive and less prone to leaf yellowing.

Supplemental care and marketing tips: Remove the whitish or blanched bottom portion of the stem when recutting, if present, for maximum solution uptake and maximum end user life. Leaf removal will only reduce vase life if a sufficient number of flowers are not present to aid in solution uptake. Flowers grown in cooler (12-15°C) climates last longer than ones grown under warmer (16-18°C) conditions. Some people may have allergic reactions to this species causing dermatitis.

ASTER, MONTE CASINO, MICHAELMAS DAISY

Aster spp.

Ethylene sensitive: No.

Storage temperature (3 days or less): 2-4°C

Storage temperature (over 3 days): 0-2°C

Note: The optimum storage temperature is not sufficiently documented by research. Presented are estimations based on plant origin, storage temperature information of similar species and general observations.

End user life: 5 - 10 plus days (depending on species/cultivar)

Special concerns: It is very difficult to make broad flower care recommendations for asters because of the very large number of species and cultivars. For example, one species (A. Bigelovii, more accurately known as Machaeranthera Bigelovii) has an optimum storage temperature of 7°C which much warmer than most other species. Yellow foliage due to excessive storage or poor growing conditions. As with most members of the aster family, flowers harvested too early (immature) will generally not open properly.

Supplemental care and marketing tips: All flower types are multi-branched with numerous relatively small flowers generally blue, white, yellow or various shades of pink. Often used as filler flowers in arrangements and bouquets.

BABY'S-BREATH, GYP, GYPSOPHILA

Gypsophila paniculata

Ethylene sensitive: Yes.

Storage temperature (3 days or less): 2-4°C

Storage temperature (over 3 days): 0-2°C

End user life: 5 - 10 days

Special concerns: Ethylene and water stress sensitive. When STS solution is taken up by the flowers, good extension in flower life is observed. However, STS sometimes offers little benefit because stem blockage prevents STS uptake. Make sure the stems are rinsed and recut under water prior to placement in STS to aid in solution uptake. Do everything feasible to prevent water stress (i.e. cut stems under water, use clean buckets, keep fresh flower food solutions clean) as water stress can rapidly induce ethylene production and thereby reduce flower life. In short, do not allow flowers to dry (inside or outside coolers) as shorter life will surely result.

Supplemental care and marketing tips: Store under high (90%) relative humidity to reduce flower and stem desiccation. Because Botrytis can be a serious problem, fungicide dips after harvest may be required at least during certain times of the year. The few cultivars available exhibit great differences in end user life. Therefore, purchase only by cultivar names. Many care "schemes" have been suggested to extend flower life including placement in bleach solutions, slamming bunches on tables to physically "pop open" flowers and using plastic tents over flowers to aid opening. While some may work (bleach used at one teaspoon per gallon can be helpful), normal flower processing for

ethylene sensitive flowers is recommended.

BOUVARDIA

Bouvardia spp.

Ethylene sensitive: Yes.

Storage temperature (3 days or less): 7-9°C

Storage temperature (over 3 days): 10-13°C

Note: the optimum storage temperature is not sufficiently documented by research. Presented are estimations based on plant origin, storage temperature information of similar species and general observations.

End user life: 7 - 14 days

Special concerns: Leaf yellowing and wilt sensitive. In some markets a special fresh flower food formulation is sold which can reduce leaf yellowing. Make sure stems are recut under water and good sanitation procedures are practiced to reduce the chances of wilted flowers.

Supplemental care and marketing tips: Chill sensitive, hold at proper temperatures. Postharvest flower performance differs greatly among the many cultivars marketed. Learn cultivar names and only buy the best.

CARNATION, MINI CARN, MINIATURE CARNATION, PINKS

Dianthus Caryophyllus

Ethylene sensitive: Yes.

Storage temperature (3 days or less): 2-4°C

Storage temperature (over 3 days): 0-2°C

End user life: 6 - 14 plus days

Special concerns: Ethylene sensitive, however, miniature types do not always respond well to STS because the different flower maturities do not take up the STS solution equally. While it is difficult to recognize water stressed carnations, severe reduction in vase life is the result: keep them hydrated when held above 2-4°C. Calyx splitting (splits) can only be prevented by grower practices.

Supplemental care and marketing tips: Bud harvested flowers perform best because they are less sensitive to, and produce less, ethylene prior to the petals reflexing more than 90 degrees. They also can be stored for up to 4 months if properly treated with STS and fungicide for Botrytis control prior to storage and then stored at the proper temperature (0-2°C) and relative humidity (95-98%). Premature petal wilting (referred to as going to "sleep") is ethylene induced. Some cultivars are less sensitive to ethylene while others do not exhibit marginal petal discoloration. The wide range of colors and forms, especially for miniatures, allows consumers to use and enjoy them in many ways. Some cultivars are very fragrant and are used to make perfumes. Fragrant cultivars have more consumer appeal.

CHINA ASTER, FLORIST ASTER, RAINBOW ASTER

Callistephus chinensis

Ethylene sensitive: No.

Storage temperature (3 days or less): 2-4°C

Storage temperature (over 3 days): 0-2°C

Note: the optimum storage temperature is not sufficiently documented by research. Presented are estimations based on plant origin, storage temperature information of similar species and general observations.

End user life: 5 - 9 days.

Special concerns: Keep stems and bucket solutions clean as well as remove any yellow leaves. It is especially important with this species to keep leaves out of water since slime quickly forms on those leaves below water and contaminates the vase solution and makes it rank.

Supplemental care and marketing tips: A main cause of premature flower death is wilting. Therefore, wash the stems prior to recutting under water, treat with a hydrating solution and prepare the fresh flower food solution properly to minimize contamination by debris and microorganisms. Available in many shades of violet, purple, blue, red, rose, pink, white and even pale yellow. In some of the more showy cultivars, the inner "disk" flowers are often replaced by outer "ray" flowers resulting in a "doubled flower" appearance. "Disk" flowers are the tubular flowers in the center of the heads of most members of the aster family as distinguished from the "ray" flowers which are the outer ones having strap-like appendages often incorrectly referred to as petals.

CHRYSANTHEMUM, MUM, POMPON

Chrysanthemum x morifolium

Ethylene sensitive: No.

Storage temperature (3 days or less): 2-4°C

Storage temperature (over 3 days): 0-2°C

End user life: 7 - 14 plus days

Special concerns: The main postharvest problems are premature foliage yellowing, wilting and the failure of the flowers to fully open. Yellow foliage is cultivar specific and is caused by poor production conditions, excessive or improper storage and fresh flower foods used at higher than recommended concentrations. Harvesting too early often results in the failure of flowers to open.

Supplemental care and marketing tips: The appearance of pinkish coloration on some non pink cultivars can indicate either old flowers or, more commonly, that they were grown at too low temperatures. Certain microorganisms normally associated with carnations can reduce the vase life of chrysanthemums when both flowers are held in a common solution. Bud harvested flowers or flowers that were not intended to be bud harvested but are too tight can be opened in fresh flower solutions at 18-22°C under 16 hours per day of normal room intensity light. The bottom portion of some mum stems can be woody: make sure these stems are cut above this woody tissue to in order to facilitate water uptake, delay wilting and extend end user life. On average, 25% of the potential end user life of this flower species is lost in the marketing channel from grower through retailer.

DELPHINIUM, LARKSPUR

Delphinium and Consolida spp.

Ethylene sensitive: Yes.

Storage temperature (3 days or less): 2-4°C

Storage temperature (over 3 days): 0-2°C

Note: the optimum storage temperature is not sufficiently documented by research. Presented are estimations based on plant origin, storage temperature information of similar species and general observations.

End user life: 4 - 12 days

Special concerns: Ethylene sensitive. Responds very well to anti-ethylene treatments like STS which will prevent the major problem with this species: flower fall. Because flowers are on spikes and are therefore at different maturity stages at the time of anti-ethylene treatment, the more open (but not fully open) flowers will benefit more from STS than ones in tight buds.

Supplemental care and marketing tips: Make sure stems are rinsed prior to recutting under water to wash off any dirt and debris often associated with this species. Flowers commonly called larkspur or delphinium are often named incorrectly. As a garden plant, it is often plagued by lack of hardiness, insect and disease problems.

FREESIA

Freesia x hybrida

Ethylene sensitive: Yes.

Storage temperature (3 days or less): 2-4°C

Storage temperature (over 3 days): 0-2°C

End user life: 4 - 12 days

Special concerns: Ethylene sensitive. Responds well to STS which greatly inhibits premature flower fading and the appearance of translucent petals as well as aids in the opening of more florets per stem. More open flowers absorb more STS than buds and are better protected against ethylene-induced disorders. Water stress can cause significant ethylene production and reduced end user life.

Supplemental care and marketing tips: Responds best to fresh flower foods when harvested with very little or no flower color showing. Do not use fluoridated water (most public water systems contain fluoride) as it can reduce flower development and cause leaf tip burn. Learn cultivar names and only market those which have good postharvest characteristics. Growers should take advantage of its fragrance as this attribute is rated very high by consumers. On average, 27% of the potential end user life of this flower species is lost in the marketing channel from grower through retailer.

GERBERA, TRANSVAAL DAISY

Gerbera spp.

Ethylene sensitive: No.

Storage temperature (3 days or less): 3-6°C

Storage temperature (over 3 days): 0-6°C

Note: Because of genetic variability, some cultivars are chill sensitive and therefore the wide range of recommended storage temperatures. Growers will have to determine themselves which cultivars need to be stored at what temperatures.

End user life: 4 - 14 days

Special concerns: Lack of water uptake (clogged stems) due to dirty holding solutions is a main cause for bent neck. Since more water is lost through the flower stem (scape) than through the flower petals, the scapes should be handled with as much care as the flowers.

Supplemental care and marketing tips: Prone to bent-neck. Hang flower heads through a meshed support or shipping tray when first hydrating to help keep stems straight. Piercing a hole through the stem below the flower head can allow solution to move further up the inside of hollow stemmed cultivars only. However, this procedure as well as the use of stem wire, straws and the like for stem support is not recommended as flower life is not often increased. Rather, use proper hydration procedures and keep the holding solution clean. Levels of fluoride in some water sources can cause petal tip burn but this disorder can be prevented by the use of some fresh flower foods. On average, 33% of the potential end user life of this flower species is lost in the marketing channel from grower through retailer.

IRIS, FLEUR-DE-LIS

Iris spp.

Ethylene sensitive: No.

Storage temperature (3 days or less): 2-4°C

Storage temperature (over 3 days): 0-2°C

End user life: 3 - 6 days

Special concerns: Failure of flowers to open and their short end user life. Make sure that good temperature and relative humidity

management is practiced.

Supplemental care and marketing tips: Iris do not store well nor do they benefit from anti-ethylene treatments. When storing iris it is better to store them wet than dry. The use of ice water will retard flower development the same as low air temperature. Therefore, making a special efforts to use ice water is generally not warranted.

LIATRIS, GAY FEATHER

Liatris pycnostachya, L. spicata, and *L.* spp.

Ethylene sensitive: No.

Storage temperature (3 days or less): 2-4°C

Storage temperature (over 3 days): 0-2°C

End user life: 6 - 14 days

Special concerns: Fungal problems such as Botrytis (especially for those grown outdoors) and water stress. Leaf yellowing and reduced end user life are common when these problems exist and are not easily controlled.

Supplemental care and marketing tips: The main advantage of using fresh flower food is to assist in the opening of more flowers per stem and not to make individual flowers last longer. An unusual looking member of the aster family, this species is also unusual in that the flowers mature (open) from the top of the stem downwards whereas snapdragon, cymbidium, gladiolus, delphinium and most other spiked-type flowers used in the floral industry open from the bottom up.

LILY, ASIATIC LILY, ORIENTAL LILY

Lilium spp.

Ethylene sensitive: Yes.

Storage temperature (3 days or less): 2-4°C

Storage temperature (over 3 days): 0-2°C

End user life: 4 - 11 days, depending on species and cultivar

Special concerns: Ethylene sensitive. STS can enhance flower life and aid in more flowers opening per stem with most species and cultivars.

Supplemental care and marketing tips: Proper cultivar selection and the use of anti-yellowing postharvest chemical treatments (available commercially in some markets) can diminish leaf yellowing. STS will not reduce leaf yellowing. If flowers are to be stored, it is best to treat prior to storage with STS and an appropriate fungicide, the latter to protect against Botrytis. Using fresh flower foods properly will benefit lilies most of the time and will not harm them as some suggest. While lily pollen can stain almost anything, removing stamens containing the pollen will not increase flower life under most circumstances. On average, 33% of the potential end user life of this flower species is lost in the marketing channel from grower through retailer.

ROSE, SWEETHEART ROSE, SPRAY ROSE

Rosa spp.

Ethylene sensitive: Some cultivars. Treat with STS if they are sold to mass marketers, especially if being shipped through distribution centers, and also STS treat prior to dry storage.

Storage temperature (3 days or less): 2-4°C

Storage temperature (over 3 days): 0-2°C

End user life: 4 - 12 days

Special concerns: The fungus Botrytis represents a major problem for roses. Symptoms of Botrytis infection include brown blotches on petals and grey, "fuzzy" growth on leaves, stems and/or flowers. Postharvest fungicide dip treatment is suggested only if registered products are used according to label instructions.

Supplemental care and marketing tips: Roses should always be placed in fresh flower food solutions. While some fresh flower food brands are more effective than others depending on water alkalinity and these differences can be significant, they are never as great as the differences between using plain water and fresh flower food solutions. Removal of those leaves and thorns below the water line should not reduce vase life if the stems are placed into a fresh flower food solution. Thorn removal above the water line can be detrimental. Petal blackening on 'Royalty' is due to grower practices and cannot be corrected at wholesale or retail levels. On average, 29% of the potential end user life of this flower species is lost in the marketing channel from grower through retailer.

SNAPDRAGON

Antirrhinum majus

Ethylene sensitive: Most cultivars are sensitive. Older flowers on a stems are more susceptible to ethylene than younger ones. However, some cultivars are naturally ethylene resistant and therefore respond little to STS.

Storage temperature (3 days or less): 2-4°C

Storage temperature (over 3 days): 0-2°C

End user life: 5 to 8 days (varies greatly by cultivar)

Special concerns: Flower stems bend in the opposite direction or away from gravity's force (namely, they bend upwards). Therefore, store and display upright to prevent such bending. Do not lay the flowers on a bench for any extended time period: one hour at room temperature can result in permanent stem bending.

Supplemental care and marketing tips: Do not remove more leaves than necessary as this can stimulate flower fall. For long term storage, bud harvested flowers should be used. Bud harvested flowers are ones in which the bottom 2 or 3 florets have colored petals emerging about one-quarter of an inch above the calyx. The many typically pastel flower colors allow florists and consumers innumerable options as to their use. The flower can be made to "snap" shut after separating and releasing the two-lipped corolla (fused petals). When grown as a garden plant, treat them as an annual although many will respond as a perennial depending on location and cultivar.

SUNFLOWER

Helianthus annuus

Ethylene sensitive: No.

Storage temperature (3 days or less): 2-4°C

Storage temperature (over 3 days): 0-2°C

Note: the optimum storage temperature is not sufficiently documented by research. Presented are estimations based on plant origin, storage temperature information of similar species and general observations.

End user life: 6 - 12 days

Special concerns: Water stress problems are common and are made

more obvious by the flower head weight. Make sure flowers are hydrated properly using a hydrating agent, cutting under water and/or using warm water. Leaf yellowing may also appear; there is no known cure.

Supplemental care and marketing tips: There is very little postharvest care information regarding this species but, because of its close relative chrysanthemum, it is believed that this flower should be treated just like mums. The end user life of this species is often determined more by leaf yellowing and/or leaf desiccation than by flower problems. This species has gained prominence in the late 1980's and 1990's. Observers suggest that the increased availability of smaller flower heads has stimulated this popularity increase, although the reasons have not yet been confirmed by research. There are several horticultural forms mostly differing in head size, plant height, oil content and flower (ray) color as well as double versus single flowers for both ornamental and food purposes.

SWEET WILLIAM

Dianthus barbatus

Ethylene sensitive: Yes.

Storage temperature (3 days or less): 2-4°C

Storage temperature (over 3 days): 0-2°C

Note: the optimum storage temperature is not sufficiently documented by research. Presented are estimations based on plant origin, storage temperature information of similar species and general observations.

End user life: 5 - 9 days

Special concerns: Ethylene sensitive. As a close relative to carnation, flowers go to "sleep" in the presence of ethylene gas in a similar fashion to carnations and baby's-breath.

Supplemental care and marketing tips: As with many flowers grown predominantly outdoors, fungal infections can be a problem. This fungal problem is mainly due to the wet foliage and flower conditions sometimes experienced at harvest. Make sure that flowers are rapidly unpacked and aerated to reduce possible fungal spread. The often doubled flower forms with bearded petals come in a wide range of single and bicolors including white to pink, purple, rose, red and violet. In addition to the taller cultivars used as cut flowers, dwarf forms also exist as bedding plants for use as border flowers in the landscape.

YELLOW ASTER

X Solidaster luteus

Ethylene sensitive: Not considered ethylene sensitive even though one report indicates a benefit from treating flowers with STS.

Storage temperature (3 days or less): 2-4°C

Storage temperature (over 3 days): 0-2oC

Note: the optimum storage temperature is not sufficiently documented by research. Presented are estimations based on plant origin, storage temperature information of similar species and general observations.

End user life: 7 - 10 days

Special concerns: If flowers are harvested too immature, they may not continue to develop to their maximum beauty.

Supplemental care and marketing tips: Treat like most other members of the aster family. In particular, make sure that buckets and vases are kept clean as well as the solution in which the flowers are placed. There is very little published postharvest care research on this species.

Detailed Summaries

The following detailed postharvest information is presented for the three crops reportedly to be the main ones to be grown for export by the Jordanian flower industry: carnations, gypsophila and roses.

CARNATIONS

Production Factors

Soil nitrate levels from 2 to 82 ppm did not influence vaselife of 'Red Sim'.

Vaselife measured in 400 ppm 8-hydroxyquinoline citrate (HQC) of 'CSU Red' was not influenced by a wide range of nutrient, soil, and irrigation levels but up to 30% difference in vaselife was noted among growers.

N and K rates from 15 to 55 pounds per acre each and 8 to 15

pounds/acre of P did not alter the vaselife of 'Elegance' miniatures.

'Little Leaf Necrosis' (necrosis of the first pair of leaves below the flower) seems to be associated with low foliar potassium (below 1%) and more so on first year plants and is not pathological.

If plant nitrogen approaches 3.0% and potassium levels fall below 2.0%, scorched calyxes and sleepy flowers can result for 'Cardinal Sim'.

Nitrate nitrogen from 0.5 to 2 pounds per 100 square feet per month (5.5 to 20 pounds of ammonium sulfate per year per 100 square feet) and irrigations made at soil moisture tensions of 0.1 to 0.3 atmospheres did not influence subsequent vaselife even though the flowers produced size and number-wise varied considerably.

The more frequent the irrigation, the more sensitive to ethylene and the shorter the vaselife of 'Improved White Sim'.

The season of the year had little influence on 'White Sim' vaselife as measured in water and various preservative solutions.

Growing temperatures of 5, 10, and 27 degrees C for one week prior to harvest resulted in 'Red Sim' vaselife of 8, 7, and 3 days, respectively.

During a 13-month period in 1982-83 in California, vaselife of 'White Sim' measured in water only did not change significantly among 3 growers and time of year. However, vaselife did change during this time in response to a sugar-based preservative in that flowers responded better to preservative treatment in winter months by about 30%.

Factors leading to higher sugar content in 'White Sim' at harvest correlates well to longer (up to 4 days) postharvest longevity measured in water.

High positive correlation (.81) was found between vaselife and hours of sunlight. In fact, the numbers were essentially the same: 10 hours/day sunlight produced 10 days vaselife; 6 hours/day sunlight produced 6 days vaselife.

Calyx splitting differs among cultivars and has been related to various growing conditions prior to harvest including low light conditions. However, specific data documenting such is minimal. Cultivars 'White Sim', 'New Improved Pink Sim' and 'Scania' generally store better than 'Caribe', 'Tangerine', and 'Blaze'.

Unconfirmed observations indicate that red/pink standard

cultivars exhibit more splits.

First year 'CSU Red' and 'Atlantis' flowers had greater vaselife than flowers from second and third year plants.

'White Sim' produced from plants in their second year last 15% longer than those produced on the same plant in their first year of production.

Plant position in bench can alter vaselife by 12 to 15%.

Single-pinched 'Red Sim' and 'White Sim' plants produced flowers lasting nearly 1 day longer than flowers from plants not pinched.

Pollination results in irreversible wilting of petals within 2 to 3 days which is preceded with a surge in ethylene production.

Harvest Factors

Prior to about 1970, most standard carnations were harvested about 3/4 open. The emergence of the Colombian flower industry lead to wider acceptance of bud harvesting techniques. Advantages of bud harvesting include:

a) less susceptible to disease/injuries since less petal surface area is exposed.

b) more flowers can be packed per box thus reducing transportation changes per stem.

c) buds produce less ethylene and it takes more ethylene to induce negative responses.

d) buds last longer since they can be opened in better conditions such as high sucrose solutions.

e) more flexibility in storage and marketing since they can be stored longer.

f) less calyx splitting because of more controllable (favorable) opening conditions.

g) more flowers produced per plant since more photosynthates (food) can be directed to developing shoots earlier.

'Improved White Sim' stems 40 cm long lasted 7.2 days while those 13 cm long lasted 5.9 days.

Flowers keep equally well regardless of whether they are harvested prior to or just after irrigation.

'Scania 3C' buds in the pre-color stage and just when color

begins to show (cross stage) can be stored for 14 weeks at 0-1 degrees C in a vapor barrier if treated with 550 ppm STS and 10% sucrose for 20 to 24 hours at 0-1 degrees C prior to storage. Pre-storage dip in a 1000 ppm solution of the fungicide Rovral or Sumilex enhanced storage performance.

It is possible to harvest flowers as small as 5 mm or when they just emerge over the last two leaves and open them in solutions containing e.g. 10% sucrose, 200 ppm silver nitrate, and 20 ppm N-6-Benzyladenine in a period of 16 days compared to flowers developing on the plant (in winter) taking 33 days but both having similar keeping qualities using 'Scania 3C'. Other opening solutions are also possible.

Buds showing 2 cm standing straight up tolerated relatively high ethylene levels (0.2 to 0.5 ppm) for 24 hours.

Typically harvested bud cut flowers (the Colombian version of 'US' and 'European' stages) are harvested prior to their surge in internal ethylene production and are much more resistant to ethylene-induced damages, i.e. they can withstand 100 ppb ethylene for 3 weeks at 0 degrees C and 5 degrees C if in the latter case they are harvested in high light/cool growing conditions.

The tighter the 'Scania 3C', Dusty Sim' and 'Alice' bud harvested, the more flowers produced/plant, viz., up to 8 more flowers/plant/year in buds harvested at about 5 mm diameter versus 20 to 25 mm diameter.

'White Sim' flowers in so-called tight European cut (flower color showing but no petal emergence), normal European cut (flower petals emerged but not reflexed), and average U.S. harvest stage (petals reflexed passed 90 degrees to the stem) required at least 10 ppm, 1 ppm, and less than 0.5 ppm ethylene for 24 hours, respectively, to significantly reduce vaselife.

To reduce calyx splitting, flowers should be harvested at the European stage and then opened at 12-13 degrees C in 1 to 2% sucrose until 1/2 inch of the petals emerge. At this point the room temperature can be increased to 18 to 23 degrees C and the sucrose to 5 to 7%. The addition of 20 ppm N-6-Benzyladenine to the above solutions is also beneficial.

Postharvest Factors

Preservatives (sugar-based): 'White Sim' responds to sugar-based preservatives 30% more in winter than during summer months. No sugar-based preservative treatment used prior to consumer level could replace consumer level use of such sugar-based preservatives. For example, treatment prior to consumer level either dry or in water and then at consumer level placed in a

sugar-based preservative lasted an average of 13.3 days whereas flowers pulsed or treated at grower level with a 10% sugar solution but in water at consumer level lasted an average of 6.6 days.

The continuous use of any sugar-based preservative solution is generally better than any pulse treatment followed by vaselife in water only. However, the best pulse treatment seems to be STS + 400 to 600 ppm HQC + 5-8% sucrose for time periods and temperatures to satisfy the STS treatments.

If bud cut 'White Sim' flowers are not opened in a sugar-based solution, their subsequent vaselife will be less than flowers harvested fully open.

Increasing sucrose concentrations up to 12% in bud opening solutions speeds up flower development, increases flower size, and increases vaselife.

N-6-Benzyladenine (50 ppm) in the vase solution was most effective (lived up to 5 days longer) in solutions containing 5% sucrose and/or with flowers harvested in high light growing seasons.

A good bud opening solution is 200 ppm HQC, 50 ppm silver nitrate, and 7% sucrose.

Ten percent sucrose pulse prior to storage can speed up opening after storage and can increase vaselife.

Eight percent sucrose + 200 ppm 8-hydroxyquinoline sulfate (HQS) was better than 8% sucrose + 25 ppm dichlorophene in opening buds.

Aluminum sulfate at 100 ppm in addition to 5% sucrose is a reasonable preservative.

Physan 20 at 200 ppm plus 5% sucrose and 150 ppm citric acid can be used as a bud opening solution.

Preservatives (anti-ethylene): Treating 'White Sim' with Benzyladenine after harvest reduced its sensitivity to ethylene.

A possible alternative for STS consists of Gibberellic Acid (10 ppm) + Benzyladenine (2.0 ppm) + Alar, 85% formulation (900 ppm) + AOA (450 ppm) + Triton-X-100 (1000 ppm).

Adding glucose to 'Scania' vase solutions delays the ethylene peak by 6 days.

'Scania', 'White Sim', 'Lena', 'LeReve' and 'Calypso' standard cultivars lasted an average of 6.2 days in water and 14.1 days if

pretreated with STS whereas the miniature cultivars of 'Exquisite', 'Scarlet Elegance', 'Corona', 'Tony', 'Sam's Pride', 'Red Barn', 'Silvery Pink', 'Super Gold' and 'May Time' lasted 10.7 and 12.2 days, respectively. Hence, STS is 9 times more effective on standard versus miniature cultivars.

'White Sim' pretreated with 5% sucrose for 5 days and then exposed to 2 ppm ethylene for 8 hours at 68 degrees F was about 6 to 7 times more resistant than water pretreated.

Sucrose can close stomates and therefore can reduce water loss, but also can reduce water uptake. Sucrose can also delay the rise in ethylene production.

Treating stem bases with 1000 ppm silver nitrate for 20 minutes at room temperature followed by a preservative solution for the vaselife study consisting of 5% sucrose, 50 ppm silver nitrate and 300 ppm HQC extended vaselife by a factor of 3 over water controls. This treatment also reduced ethylene production by about 56% and delayed the peak of ethylene production by 8 to 11 days.

While 'White Sim' flower heads can be dipped or sprayed with 50 to 100 ppm silver nitrate after harvest and this can offer ethylene protection, however, the silver can spot (discolor) the petals.

STS treatments are best when done within 1 day after harvest. Flowers held in water for up to 3 days after harvest and then treated with STS still exhibited an approximate 30% vaselife extension. Flowers held dry after harvest at storage temperatures near zero degrees C can retain their responsiveness to STS for days and even weeks.

Flowers treated with STS and then their vaselife measured in water (no sugar) lasted 19.5 days compared to no STS treatment but held continuously in Everbloom (unknown concentration) lasted 16.2 days.

Flowers treated dry prior to STS treatment last 1 to 2 days longer.

Extended treatments using STS do not cause problems up to 72 hours at 3-4 degrees C or 24 hours at 20 degrees C or 96 hours at 8-9 degrees C using recommended STS rates.

'Peterson Red' treated with N-6-Benzyladenine, a cytokinin, at 5 ppm in combination with 5% sucrose and 300 ppm HQC, had a longevity of 18 days compared to 6 days without the cytokinin. The cytokinin reduced ethylene synthesis and sensitivity to ethylene.

'Elegance', 'Barbi', 'Sweetheart', and 'Orchid Royalette' miniatures lasted 8.2, 7.2, 9.6, and 7.6 days in water only and 11.6, 12.0, 12.8, and 14.1 days if treated with STS.

Preservatives (rehydration systems); Not recutting 'Improved White Sim' stems reduces vaselife by an average of 32% but recutting under water does not seem to be better than recutting in air.

Sucrose (5 to 20%) or potassium chloride (1.0 to 1.5%) supplied to 'White Sim' for 20 hours can enhance water uptake by increasing the osmotic potential (drawing power) of petal cells.

Carnation flowers or leaves removed resulted in a 46 and 42%, respectively, reduction in solution uptake.

Bud opening room conditions are best if 22 to 24 degrees C day and 18 - 20 degrees C night temperatures, 16 hours/day of 2000 lux (light), and 90 to 95% humidity, the latter reducing petal desiccation and calyx splitting.

A bud opening solution of 10% sucrose, 75 ppm citric acid, and 500 ppm benzalkonium chloride (a quaternary ammonium salt) has the following advantages over ones with silver nitrate, HQC, sucrose, and/or aluminum sulfate:

a) needs no distilled water
b) transparent and without precipitates
c) non phytotoxic
d) economical

Preservatives (other): 'Red Sim' dipped in a 10 ppm N-6-Benzyladenine + 0.025% Tween-20 solution respired 22% less and lasted longer than non-treated.

Buds can be opened under greenhouse conditions in which the flowers were grown.

Carnation buds need at least 4 hours of light per day to open, and temperatures below 20 degrees C delay bud opening.

Water: Sodium bicarbonate (up to 32 ppm) has no influence on vaselife when measured in 400 ppm HQC.

Vaselife can be reduced from 0.5 to 2.5 days in water with a hardness (total dissolved salts) of about 250 to 375 ppm.

Fluoride at 1.0 ppm (the level generally found in municipal water supplies) can cause blue spots on petal margins of 'William Sim' (red) and 'Keefers Cheri Sim' (pink). Aluminum containing preservatives can help alleviate these symptoms. However flower vaselife is not reduced by such fluoride levels if the

discoloration is not considered.

Storage: 'Improved White Sim' respire about 25 and 53 times more at 20 and 30 degrees C, respectively, compared to 0 degrees C.

'Scania' stored at 5 degrees C began to show significantly reduced vaselife after only 2 to 3 days of storage whereas at 0 degrees C this did not occur until after 2 or 3 weeks of storage.

For storing flowers a vapor barrier is essential that the flowers must be cooled to 0 to 1 degrees C before the vapor barrier is fully enclosed to reduce moisture buildup and, hence, subsequent fungal problems.

'Northland', 'Casablanca', 'Virginia Rose', 'Virginia Miller', 'Minuet', 'Millers Yellow', 'Tom Knipe' and 'King Cardinal' stored better when not placed into water prior to storage.

'Linda' and 'Scania' exhibited petal burn if stored for more than 2 weeks at 0 degrees C but did not show such symptoms if stored at 3 degrees F.

Stored 'Improved White Sim' from 0 to 10 days at 3 degrees C became more sensitive to ethylene as storage time increased when treated with 1.8 ppm ethylene after storage for up to 34 hours with a maximum reduction in vaselife of 46%.

Surveys show average carnation storage coolers at grower/shipper level ranging from 0 to 6 degrees C and ethylene levels from 10 to 110 ppb. Remember, the higher the temperature the higher the ethylene levels.

At 0 degrees C it takes 3 days of 22.0 ppm ethylene to reduce 'Improved White Sim' vaselife while at 5 degrees C it takes only 2 days of 0.9 ppm and at 20 degrees C only 6 hours at 2.8 ppm ethylene.

STS-treated flower buds exhibiting petal emergence about 0.5 cm be stored for 12 weeks at 0-4 degrees C in polyethylene vapor barriers and subsequently opening in 7% sucrose and 300 ppm HQS with good vaselife.

'Barbi' miniature carnations stored dry for 5 days at 1-3 degrees C and then treated with STS lasted 8 days compared to STS treatment prior to storage (7.0 days), water only (2.9 days), and STS prior and preservative after storage (11.0 days).

Pulse STS + 10% sucrose treatments prior to storage of buds is better than STS alone.

After storage up to 4 weeks at 0 degrees C, 'Cardinal Sim' and 'William Sim' lasted 3 to 5 days longer if the stems were dipped

to their calyx in about 225 ppm N-6-Benzyladenine (cytokinin) for 5 minutes at room temperature.

Packaging: When shipping weight is important, the cost of removing bottom foliage can be outweighed by the approximate 13% reduction in flower weight by a factor of about 2.5 to 1.

While standard sized shipping boxes have numerous advantages, regardless of the size, all boxes should be full-telescope of at least 110 kilogram test.

Transport: Averaged over numerous pulse treatments and also considering flowers that were not shipped or shipped by air or truck for about 2800 miles, 'White Sim' exhibited equal vaselife regardless of whether they were precooled to 2 degrees C or not.

On average, surface transportation modes (truck or piggyback on the railroad) result in flowers with longer vaselives than those shipped by air.

'White Sim' transported by truck over 3,000 miles (about 75 hours) gained an average of 2.3 days more vaselife compared to those transported the same distance by air in less than 20 total hours.

'Improved White Sim' respiration rate increases by a factor of about 2400% from 0 degrees to 20 degrees C which means an extra 2 to 3 BTU's produced per pound per hour. The latter temperature is often encountered during transport, especially using air.

Ethylene level within flower boxes shipped by air can often exceed 50 ppb. In very few cases ethylene scrubbers can be effective in flower boxes but in no way can using scrubbers be more beneficial than using STS prior to the transportation phase.

Treating 'Scania' standard and 'Elegance' spray carnations with STS prior to transport extended subsequent vaselife by 11.5 and 5.2 days, respectively. The STS treatment was followed with a 16 hour 10% sucrose + 200 ppm Physan, the first hour at 25 degrees C and the remaining 15 hours at 5 degrees C.

"Pulsing" 'White Sim' right after harvest and prior to transport with a 1000 ppm silver nitrate stem dip for 15 minutes followed by a 16 hour treatment in 10% sucrose and 150 ppm citric acid at 20 degrees C increased post-transport vaselife when measured in water by 6.5 days compared to no pulse treatment.

Vibration tests (1.1 G for 30 minutes at 20 or 0 degrees C or for 3 hours at 3.6 G) resulted in no visible damages on 'Scania' or 'Improved White Sim' and did not increase ethylene production.

Flowers transported on bottom-air delivery trailers or intermodal

containers with at least 2000 cfm air capacity at 2.0 inches static water pressure can be precooled in transit with a 7/8 cooling time from 8 to 12 hours.

Pathology: Recutting 'Improved White Sim' stems every day does not increase longevity in all cases suggesting that some sort of physical (microbes or air) blockage may not be important.

'Improved White Sim' stems treated with 1000 ppm silver nitrate for 30 minutes at room temperature to a depth of 4 inches and subsequently placed into bacteria-contaminated vase solution can actually reduce the bacterial count from 9,500,000 counts/ml to about 5 counts/ml after 4 days. However, the internal stem bacterial count in the non-silver treated averaged 19,000 counts/ml and in the silver-treated averaged 6800 counts/ml, not nearly the difference as noted in the vase solution suggesting that internal bacterial blockage may not be important.

Metabolites produced from two gram negative bacteria in the vase solution holding 'Siva' carnations significantly reduced water uptake by the flowers and reduced vaselife. Therefore, vaselife can be reduced not only by bacteria-induced physical blockage but by chemicals produced by some bacteria.

Metabolites produced by the bacteria 'Improved White Sim' solution interaction by themselves reduce longevity by about 33% and that silver nitrate has a slight benefit on the filtrates.

Chemical substances released from the surface of carnation petals can enhance the germination of Botrytis conidia.

Ornalin 50 WP (Vinclozolin) can be used as a postharvest dip at about 750 ppm to reduce Botrytis blight. After 10 days storage at 4 degrees C, 47% of the controls were diseased compared to 8% of the Ornalin-treated.

Other: Most ethylene formation takes place in the basal (greenish) portion of the petals using 'White Sim'. Compared to the whole flower and to the white upper petal portion, the basal portion produces an average of 5 and 5000 times more ethylene per unit weight, respectively.

Ethylene levels not high enough to reduce longevity can stimulate the growth of styles and petals. Hence style elongation beyond the tips of petals can indicate previous ethylene encounters.

When stems are placed in 1000 ppm silver nitrate for 10 minutes and the flowers subsequently stored from 1 to 8 weeks, recutting the stems upon removal reduced the post-storage longevity by about 2.4 days or 20%.

Tinted flowers may last longer than ones not tinted probably due

to the better (dry) handling of the flowers prior to tinting rather than due to the effects of the tinting compounds per se.

Keys to Success - Carnations

o Monitor foliar potassium levels carefully so as not to get too low and increase the chances of leaf tip burn on the uppermost leaves.

o Don't allow foliar nitrogen levels to get too high, especially with low potassium levels as noted above, because leaf and/or calyx tip burn can be enhanced as well as flower vaselife reduced.

o Cool, bright growing conditions favor increased vaselife.

o Monitor vaselife and calyx splitting by cultivar, keep records, and eventually consider growing only those that perform well using these two quality measurements.

o Harvest standards in the bud stage. The tighter the bud, the longer it can be stored. Also, the tighter the bud, the more one has to understand and monitor bud opening solutions as some kinins and/or gibberellins may be required.

o The more leaves left on carnations, the longer they last.

o Treating with STS is critical and essentially mandatory. Treating at grower/shipper level is best but positive results are almost certain at all levels. While a second treatment could possibly cause phytotoxicity symptoms, under practical conditions it is doubtful.

o Carnations cannot be over-treated with sugar-based preservatives so make sure they are placed in such solutions after the STS treatment at any and all stages of the marketing system.

o Carnations store best at 0-1 degrees C with some red cultivars doing better at the higher side of this range (up to 3 degrees C) so as to reduce color changes (bluing) of the petal edges.

o A vapor barrier is essential if storage time is over 5 days.

o Recutting stems in air (under water seems to be of no further advantage) is the first and most critical step that must be done just prior to placing them in any treatment solution.

o Keeping vase solutions clean is critical as leachates from the

stems/leaves and/or microorganisms associated with the flowers can greatly reduce vaselife.

GYPSOPHILA (Baby's Breath)

Production Factors

Some leaf phytotoxicity may be visible at harvest due to airborne fluoride (0.4 to 2.0 micrograms/cubic meter) since this species is moderately susceptible to this pollutant.

Harvest Factors

Bud harvested and then placed into a 3% sucrose + a quaternary ammonium germicide for at least 4 hours up to 24 hours at 20 degrees C can double the vaselife to about 10 days.

Harvested with about 30% flowers opened, a 5 to 10% sucrose + 200 ppm Physan solution for 48 hours at 20 to 22 degrees C resulted in very good flower opening and vaselife. This treatment is especially beneficial in winter months.

Under normal (non bud cut) commercial conditions, flowers are harvested when about 50% of the flowers are open.

Postharvest Factors

Preservatives (sugar-based): 'Bristol Fairy' foliage looks best when the condition solution contains either 0, 2.5, 5, or 10% sucrose + 25 ppm silver nitrate compared to 1000 ppm silver nitrate dip, 200 ppm HQC.

Flowers held in a 200 ppm HQC + 2% sucrose preservative were always of higher quality and longer lived compared to water alone, regardless of treatments prior to vaselife determinations.

A solution reported good for flowers harvested open is 25 ppm silver nitrate + 200 ppm citric acid + 8% sucrose + 150 ppm HQS whereas the bud opening solution has 25 ppm silver nitrate + 150 ppm HQS + 150 ppm citric acid + 2% sucrose.

Using 200 ppm HQC + 2% sucrose did not prevent microbial growth in solutions but did significantly extend vaselife. Adding 100 ppm sodium benzoate to the above inhibited microbial growth and eliminated slime formation but did not extend vaselife.

Preservatives (anti-ethylene): Cutting flowers at 30% open and first treating with STS (normal time, concentration) and then followed by 4% sucrose + 200 ppm Physan overnight will yield ethylene-resistant flowers with good opening and vaselife characteristics especially if the flowers are held in a

preservative solution at consumer level.

Preservatives (other): Bud-harvested 'Bristol Fairy' opened in 25 ppm silver nitrate + 5 or 10% sucrose and then dried produced the best looking dried Gypsophila compared to all other treatments.

Water: Some tap waters when compared to de-ionized water can reduce flower opening and vaselife but these effects are reduced or eliminated when 5 or 10% sucrose + 200 ppm Physan are used.

Storage: Flowers stored dry in a polyethylene over-wrap at 0 degrees C for 1 or 2 weeks were not as good upon removal and subsequent vaselife compared to those stored in water or preservative solution for 4 to 7 days at 5 degrees C.

Pathology: High levels of bacteria are reported (no data) to be associated with this crop. Therefore, the use of preservatives is a must.

Ornalin (Vinclozolin) at either 44 or 88 grams/100 liters (6 to 12 oz. active ingredient/100 gal.) sprayed on flowers prior to packing and storage for 10 days at 4 degrees C resulted in 56% decrease in Botrytis infected flowers.

Other: To achieve maximum vaselife, the bottom 4 inches of foliage must be removed.

Keys to Success - Gypsophila

o Bud harvesting followed by a 3 to 10% sugar-based pulse results in the best quality at all stages of the marketing channel.

o The use of 25 ppm silver nitrate with a 2 to 5% sucrose preservative can enhance foliage quality.

o Gypsophila responds very well to STS treatments which is not unusual since it is related to carnations.

o Flowers store best dry at 0 degrees C in a vapor barrier. Be sure to measure flower and not just air temperature.

o To achieve maximum vaselife, 4 inches of the bottom foliage must be removed.

ROSES

Production Factors

High potassium levels can enhance petal bluing and bent neck

problems.

The vaselife of 'Red Garnette' was extended by about 1/2 day when grown in 2000 ppm carbon dioxide enriched greenhouse over air controls but no effects were measured on 'Forever Yours' and 'Briarcliff Supreme'.

Diameter of 'Better Times' stems increases as nitrate levels increase which would suggest that stems be stronger (they were) and there would be less bent neck (there wasn't).

Winter grown 'Forever Yours' responded favorably to a sugar pulse (10% sucrose with 5.0 ml uptake/stem) by exhibiting vaselife and color characteristics of normally longer lasting summer grown where natural carbohydrate (sugar) levels are higher. Implied (no data) was that this same pulse would not work on summer grown flowers.

The bluing of 'Baccara' can be reduced at grower level by two procedures. The first if effective under high or moderate light intensities consists of increasing the carbon dioxide levels in the greenhouse to 1500-3000 ppm. The second, when light intensities are low and increasing carbon dioxide levels is not beneficial, consists of lowering the growing temperature which can be effective in reducing petal bluing.

Flowers harvested in winter have shorter vaselives than those harvested in July through September.

While evaporative cooling reduced by 4% the number of flowers produced using 'Baccara', 'Magic-Moment', 'Marimba' and 'Yellow Belinda', the resulting flowers are of higher quality as measured by weight per unit stem.

As a means of reducing energy costs, splitting night temperatures in various combinations of 17 and 5 degrees C (up to a maximum of 7 hours per night of 5 degrees C) for 22 weeks resulted in production unit, quality (grades), and vaselife reductions for 'Forever Yours' and 'Cara Mia'. However, upon returning to continuous 17 degree C night temperature the plants from the longest 5 degree C treatment produced twice as many flowers of higher quality and even more bottom breaks.

Since approximately 90% of flower pigments are produced during a short time period from when a bud is 75% maximum diameter to harvest time (100% diameter), any heat and/or light stress during this time can greatly influence pigment formation and thus resulting flower (petal) color.

The vaselife of 'Zorina', 'Garnette', and 'Baccara' was maximal at growing temperatures from 20 to 23 degrees C but greatly reduced if grown at 12 to 15 degrees C or 27 degrees C during the

last 3 weeks before flowers were cut.

Increased light intensities from 1,500 to 12,000 lux decreased stem growth in the "neck" region (where "bent neck" occurs) by 32% while increasing the day length from 8 to 24 hours increased this "neck" growth by 36% using 'Garnette'. In addition, leaf number decreased with increasing light intensities but was unaffected by day length. The above suggests (data not presented) that factors decreasing "neck" length and leaf number (i.e. increased light intensities and shorter days as related to "neck" length) may in fact reduce the chances of bent neck.

'Golden Wave' is approximately twice as resistant to bent neck compared to 'Cara Mia' and 'Bridal Pink'.

Some vaselife differences among cultivars include: (yellow): 'Golden Times' better than 'Golden Fantasy' or 'Eclipse'; (red): 'Ilona', 'Baccara', and 'Red Success' better than 'Exciting'; and (light pink): 'Sonia' better than 'Lara'.

The following cultivars are presented in decreasing order relative to their sensitivity to bent neck: 'Cara Mia', 'Jacqueline', 'Town Crier', 'Forever Yours', and 'Samantha'. Hence, 'Samantha' exhibits the least bent neck.

The following summarizes by cultivar the vaselife in days of freshly harvested and stored flowers (4 to 5 weeks at 0 degrees C in a vapor barrier which were dry handled prior to storage).

Table 19. Storage effects on vaselife of rose cultivars.

Cultivar	No storage	Storage
Forever Yours	10.7	2.3
Sonia	7.2	2.2
Samantha	11.9	3.2
Merinor	5.0	2.3
Royalty	13.1	3.2
Cara Mia	10.4	0.6
Town Crier	3.9	0.3
Carina	6.8	2.9
Garnette	9.7	3.7
Belinda	8.0	2.5
Jack Frost	8.3	7.0
Spanish Sun	7.9	4.9
Visa	11.5	4.7
Faberge	7.8	3.9
Golden Wave	7.6	2.6
Carte Blanche	6.0	3.5

Harvest Factors

To reduce the chance of black buds forming on 'Ilana' after harvest, don't harvest too immature and don't place them directly into a cooler after harvest as they need a condition period first.

'Forever Yours', 'Bridal Pink', and 'Golden Wave' were harvested when: 1) sepals fully open, petals tight; 2) sepals beginning to open and reflex (drop); and 3) sepals up over the petals. All cultivars opened when harvested either at stage 1 or 2 above but stage 3 was often too tight.

Some cultivars should be harvested slightly more opened in winter months compared to summer so as to help ensure complete opening and improved vaselife.

During the harvesting of 'Better Times', 73% more bruised petals were noted when the flowers are carried being held at their cut ends with flower heads down compared to being carried in canvas or with the stems over arm with flower heads up.

Vaselife, as measured in water only and terminated when petals wilted or bent neck appeared, was not influenced by stage of harvest from only 2 sepals open to all petals opened but no stamens visible using 'Baccara', 'Zorina', and 'Red Garnette'. However, what was influenced was bud opening. To ensure a satisfactory opening of the flower, 'Red Garnette' should not be cut before 2 petals are open; 'Zorina' not before 6 petals are open; and 'Baccara' not before all petals are open. These stages of maturity refer to September, November and May. In June the three varieties can be cut one or two stages of maturity earlier. Of the three varieties tested 'Red Garnette' has the best longevity. For all the varieties the vaselife is best in May and poorest in September.

Bent neck in cultivars like 'Cara Mia' can be aggravated by precooling if too tight a bud harvest is practiced since precooling will more quickly retard any further growth and/or development of the stem just below the flower where bent neck occurs.

Roses harvested in the afternoon versus morning last 7 and 11% longer in summer and winter months, respectively.

Hooks or knots are terms to describe when a rose is harvested below a previous cut or pinch. Hooks can reduce vaselife when measured in water only using 'Better Times' but either had no effect or even increased vaselife when held in a sugar-based preservative.

Postharvest

Preservatives (sugar-based): Super Star' lasted 6.9 days in water, 4.8 days in 1.5% sugar (no germicide) and 17.0 days in Chrysal at 1.25% when held at 20 to 22 degrees C under 60 to 90% relative humidity.

Vaselife of 'Samantha' and 'Forever Yours' was measured as influenced by grower source, water quality, and preservative usage. While a number of differences were noted, the only consistent positive effect in all cases was the use of a sugar-based preservative.

Sugar-based preservative effectiveness is directly related to its ability to reduce the ultimate solution pH down to 5.0 or below.

'Sonia' and 'Belinda' roses dethorned and placed into water only lasted an average 5.5 days compared to 7.2 days for roses not dethorned. The use of a preservative solution instead of water reversed this negative effect.

Cobalt nitrate (270 to 360 ppm) and 5% sugar works well to help prevent bent neck in 'Samantha', 'Royalty', 'Cara Mia', 'Visa', 'Volare', and 'Red Success' but petal bluing increased with some cultivars.

On average, vaselife is improved 30 to 50% when a sugar-based preservative is used.

Pulsing many rose cultivars for 2 to 6 hours at room temperature or longer periods at colder temperatures can enhance subsequent vaselives by up to 125% if the latter is determined in water only. However, if vaselife is measured in a sugar-based preservative, then the differences are minimal if any at all.

Of the chemicals tested, the best preservative for 'Sonia', 'Baccara', 'Carina', 'Ilona', 'Golden Fantasy', 'Golden Times', 'Lara', 'Pascali', 'Prominent' and 'Tommy Bright' consisted of 3% sucrose + 2.5 ppm silver nitrate + 130 ppm HQS + 200 ppm citric acid.

Any differences in the vaselife or % bent neck of 'Cara Mia' induced by transportation method (air or truck), precooling procedure, and/or pulsing treatments was essentially eliminated or greatly reduced if the vaselife was determined in a 2% sugar-based preservative.

Averaged over numerous handling/transport treatments, sucrose-pulsed 'Cara Mia' (2% sucrose + 50 ppm silver nitrate + 300 ppm aluminum sulfate + 200 ppm HQC for 2 to 4 hours at 18 to 20 degrees C immediately after harvest) exhibited 81% petal bluing if held in water only after pulsing versus 46% if held in

the same preservative solution. Hence, sucrose pulsing of roses cannot replace the use of a sugar-based preservative at consumer level.

Two percent sucrose plus 50 ppm aluminum sulfate extended vaselife of 'Sonia' better than 2% sucrose plus 200 ppm HQS.

Stem plugging is enhanced with 'Forever Yours' if only sucrose (2%) is used without a germicide.

'Forever Yours' lasted an average of 7.4 days when measured in numerous tests using 10 commercially available sugar-based preservatives, 7.0 days when measured in the soft drinks Sprite or 7-Up :(50/50 mixture with water), or 5.4 days in tap water.

Many rose cultivars including 'Jacqueline' exhibit foliar damage if placed in preservatives containing 2 or more % sugar.

The addition of Alar (B-Nine) at 500 ppm to a 3 to 5% sugar + HQC solution resulted in 'Forever Yours' lasting 4 days longer than without Alar.

'Better Times' placed directly into warm water at greenhouse level and then hardened overnight at 1-2 degrees C lasted 4.9 days while these held dry for 4 hours after harvest and then placed into water lasted 3.3 days. However, replacing the water with a sugar-based preservative resulted in equal vaselife of 7.8 days regardless if held dry for hours or not.

Preservatives (anti-ethylene): The use of STS in solutions holding 'Cara Mia' can increase solution uptake over HQC, sucrose, and Physan 20 solutions but does not increase vaselife.

STS can induce phytotoxic leaf symptoms if applied at rates used for carnations and, regardless, while preventing ethephon-induced damages, does not extend vaselife in water controls using 'Sonia'.

Severe water stress of roses (20 to 25% water loss) results in flowers that will not take water up and therefore die. Petals removed from these stressed flowers and their basal ends placed in water regain their turgidity suggested that the stressing influences water uptake prior to the petals. The use of an ethylene biosynthesis inhibitor (AOA) can reduce this water stress problem as can STS.

Preservatives (rehydration systems): Recutting 'Forever Yours' in air or under water resulted in an 18% increase in vaselife over non-recut controls but no differences were found between the two recutting techniques other than the ones cut under water rehydrated faster.

Water movement from the stem base to petal tissue (18 inches) takes about 35 seconds when a rose stored for 24 hours at 0 degrees C in the dark is placed in light at room temperature in room temperature water.

Lateral water (solution) movement into all functioning xylem elements takes place rapidly (in a few seconds) and immediately above any damaged elements at the cut surface of a stem.

Sugar can recrystallize (no data presented) inside xylem elements, especially when air is present, to further reduce water uptake.

Bluing is enhanced with 'Better Times' if they are hydrated with water prior to dry storage at 0 degrees C compared to being handled dry prior to storage.

The use of hot (44 degree C) water or hot preservative solutions at wholesale level may actually shorten vaselife. If flowers are so wilted or the buds so very tight one should use underwater cutting or citric acid (non-sugar) solutions instead of hot water.

Using citric acid and Tween 20 as a rehydration solution can be phytotoxic in some water sources especially for roses.

Vaselife of 'Better Times' was not enhanced when flowers were placed into pH 4.0 water made acidic by either sulfuric or hydrochloric acids.

Deep vase water (25 to 45 cm) contains less air then water at 7-8 cm and can thereby speed up water uptake by speeding up gas removal from cut ends.

'Cara Mia' stems cut under water or in air and then placed into degassed water + 600 ppm citric acid were of equal hydration and both were about 3 times less water stressed than flowers cut in air and placed into water.

Recutting 'Cara Mia' stems under water or recutting in air and then placing into Millipored water plus about 300 ppm citric acid exhibited equal water uptake, both of which were about 3 times better than recutting in air and placing into plain water.

Sucrose (1.5%) reduced 'Cara Mia' water uptake within the first 4 hours by 65% compared to water alone.

Filtering water through Millipore filters resulted in an approximate 2-fold increase in the maximum flow rate through stem segments of 'Cara Mia' and a 2 to 3-fold decrease in blockage. The benefits of the filtration may in part be due to the degassing that occurs.

Deoxygenated solutions (1 ppm oxygen) resulted in 'White Satin' taking up about 65% more solution in the first 2 hours compared to normal oxygenated (9 ppm oxygen) but that after 72 hours there was not difference in total solution uptake.

There is a good correlation (76.5%) between leaf area and water uptake: the more the leaf area the more water is taken up.

HQC (200 ppm) was 30% more effective in improving solution uptake (hence vaselife) of 'Better Times' at solution pH 4.0 compared to pH 6.0.

Rehydrating roses, especially after a long storage or transport period, is best done in water or any other solution that is about 44 degrees C and the surrounding air at 5 degrees C.

'Sonia' roses stored in water at 5 degrees C were found to accumulate bacteria in the lower stem due to transpiration. Subsequent dry storage at 16 degrees C for 15 hours increased stem bacteria count by 70 times prior to dry holding. Hence, presently most if not all roses are handled wet prior to shipment which would result in the above bacterial situation which strongly supports recutting stems ;upon arrival. Not recutting rose stems can reduce vaselife by about 45%.

Preservatives (other): Aluminum sulfate (35 to 340 ppm) in the vase solution holding 'Baccara' resulted in a decrease in transpiration (stomata closure), extended photosynthetic capability, and a resulting enhanced vaselife.

Kinetin at 20 and 60 ppm increased 'Golden Wave' vaselife by 18 and 35%, respectively, when used continuously in a vase solution.

The use of iced or otherwise chilled water to harden 'Better Times' after harvest actually reduced vaselife by about 13%.

Postharvest 60-second dips of kinetin (20 to 100 ppm) can enhance vaselife by about 13% if measured in a sugar-based preservative.

If roses have been properly conditioned and transported under good conditions prior to arriving at wholesale, these may be of little advantage and, in some cases, even disadvantages in re-conditioning them at wholesale level. However, this assumes that the ultimate retailer will recut the stems and place them into a sugar-based preservative.

Various macromolecules in vase solutions can be precipitated by the addition of aluminum sulfate. These precipitates do not themselves block the xylem in cut roses and in fact can enhance water uptake by taking these substances out of solution.

'Sonia' stem blockage occurs in the bottom 1.0 cm. Keeping the

stem ends (2.5 cm) in 0 degree C water with the remaining stem, leaves, and flower at 20 degrees C and in the light greatly improves water uptake.

At grower level, the main benefits form using preservative solutions in the greenhouse and/or grading room relates to the properties of germicidal, rehydration, and/or hormonal much more so than the effects of the sugar. Sugar is, however, the key preservative component when used at consumer level.

The use of clean, plain tap water at grower level can be effective if the water is of reasonable quality as measured by total dissolved salts and bacteria contamination and the temperatures are cool. However, the benefits of using a preservative are greatly increased during warmer times of the year and when the water quality is poor.

'Jacqueline' vaselife was not significantly altered after being dipped after grading into various anti-transpirants including 1% Polytrap, 20% Clear Spray, 10% Wilt Pruf NCF or 2% Folicote.

Kinetin (20 to 60 ppm) in the vase solution can enhance vaselife of 'Golden Wave' by about 20% because it enhances solution uptake.

In dirty vase solutions, more leaves per stem can cause a more rapid stem blockage because more water is being taken up.

Filtration using a millipored filter benefits increase as the water used in vase solutions gets older.

Cold water extracts of stem segments can remove chemicals that, when used in a vase solution, can reduce vaselife of freshly harvested roses of the same or different cultivars.

With 'Cara Mia' and 'White Satin', maximum solution uptake was at solution pH below 3.0 yet maximum vaselife was at pH 5.0.

Severe leaf stripping techniques such as leaving the stems in a mechanical stripper for twice the recommended time period or actually using a knife to completely de-bark the stem does not in itself reduce vaselife. However, the resulting chemical leaching from the stems and/or potential increased microorganism growth could have an effect.

'Forever Yours' take more water up in the light versus the dark. However, the maximum water uptake is during light/dark cycles of 12 hours each where it doubled in the light within 1 to 2 hours after the dark period.

Roses are considered to be rather insensitive to ethylene gas and that the number one limiting factor in extending vaselife is the

ability or lack thereof to maintain a continuous supply of a sugar-based preservative to the flowers. However, when a preservative supply is maintained, then it is believed (no data presented) that indeed ethylene does become the number one limiting factor for vaselife.

'Samantha' held in water only took an average 3.8 days to exhibit the first bent neck and eventually 100% of the flowers did the same whereas flowers held in 275 ppm cobalt nitrate never showed bent neck symptoms.

The ultimate vaselife is not reduced if at wholesale level roses are left out on tables from up to 6 hours under normal environmental conditions if they either arrived in a well hydrated (conditioned) manner or were properly conditioned at wholesale level.

Over 1 extra day of vaselife is possible if roses are allowed to become "slightly" water stressed prior to recutting and placing into a sugar-based preservative. The problem is what is "slightly" mean?

'Forever Yours' lasted an average of 6.9 days when placed to various depths in 5 foam type containers and 6.4 days when held in a vase with no foam.

Plugging of water conducting vessels in 'Forever Yours' mainly occurred at the point in the stem just above where the water level was maintained. In this experiment the water level was maintained between 13 and 15 cm and the blockage was between 15 and 20 cm. Hence, recutting 2 to 3 cm off the bottom of the stem would not alter this type of blockage but the addition of 200 ppm HQS would reduce the same.

Water: The vaselife of 'Tropicana' was not consistently effected by total dissolved salts ranging from 105 to 1582 ppm but fluoride increasing levels from 0.1 to 4.2 ppm consistently reduced vaselife up to 4.8 days.

The vaselife of 'Sonia', 'Marimba', 'Baccara', 'Carol', 'Dr. A. J. Verhage', and 'Super Star' was not influenced by fluoride up to 4.0 ppm.

The following vaselife data in days shows the effects of bicarbonate + or - 400 ppm HQC or + or - 400 ppm + 5% sucrose.

Table 20. Effects of water quality and rose vaselife.

Bicarbonate (ppm)	Vaselife (days)
0	8.2
400	4.3
400	4.8
400 + preservative	8.8

Hence, the preservative (mainly sugar) was able to overcome the bad effects of the carbonate.

'Baccara' and 'Super Star' had similar vaselife when held in tap or de-ionized water, sterilized or not.

'Jacqueline' averaged 6.1 days vaselife when held in distilled water and only 3.3 days in tap water containing 800 ppm total dissolved salts at pH 7.3.

Storage: Precooling flowers (dry) directly after harvest was better than placing them in water prior to precooling.

Vaselife of 'Mercedes' harvested when the calyx begins to separate from the outer petals was 4.9 and 3.9 days after 10 days storage at 2-3 degrees C either dry or wet, respectively, compared to 6.9 days for the non-stored controls.

Storage temperatures slightly below 0 degrees C can induce a blackening of the receptacle region.

The more leaves on roses during dry storage, the more the water loss due to transpiration. To reduce this they should be stored at temperatures near 0 degrees C and under high relative humidity.

In dry storage, the greater the density or weight (mass) of roses per storage container volume, the longer they can be stored which is probably related to increased relative humidity and a resultant reduction in transpirational water loss.

When 'Better Times' were stored at 0, 5, or 10 degrees C in air or 15% carbon dioxide + 5 % oxygen + 80% nitrogen, the best treatment was 5 degrees C in air.

While harvested roses can photosynthesize when placed into light, there seems to be no advantage and in one study even a disadvantage of storing in light.

Of all carbon dioxide and oxygen levels tested, ordinary air at high humidity at 0 degrees C was best.

No consistent data has been published supporting the positive effects of controlled atmosphere storage (low oxygen and/or high carbon dioxide levels) of roses especially since these results are very cultivar dependent.

'Samantha', 'Sonia', and 'Forever Yours' could be stored for 2 weeks under normal (0 degree C, dry, in vapor barriers) and 4 weeks under low pressure (same as normal except at 1/30 atmosphere) and still exhibit at least 61% of their non-stored, original vaselife.

Average over storage periods from 2 to 5 weeks at 0 degrees C, 'Samantha', 'Sonia', and 'Forever Yours' had 3.4 times more acceptable flowers upon removal if stored in vapor barriers versus no vapor barriers.

It takes 34, 25, and 20 minutes to precool a box of 20 bunches of roses to 7/8's of its final temperature at 0.5, 1.0, and 2.0 inches of static (water) pressure, respectively.

Some cultivars exhibit a darkening of the peduncle (stem right below the flower) upon removal from storage. While vaselife isn't seemingly reduced, the color provides a barrier to consumer acceptance. No known reason for this disorder is known. Similar but not known if it is the same is the purple-colored peduncle on 'Sonia' after 2 weeks or more of low pressure storage.

'Belinda' stored dry at 3-4 degrees C lasted an average of 1.5 days longer after 3 weeks storage if held in a vapor barrier (polyethylene bag) even though the storage room was 95 to 98% relative humidity.

Dry storage in polyethylene of 'Red Delight', 'Baccara', and 'Pink Sensation' was better at 0 vs. 2-3 degrees C after 2 to 3 weeks storage and was also better than wet storage at either temperature.

As measured in water only, vaselife of 'Mercedes' was 6.8, 4.8, and 4.5 days after dry storage at 2 to 3 degrees C for 0, 10, 17 days, respectively.

'Rouge Mielland' store better if first allowed to rehydrate prior to storing dry at 5 degrees C wrapped in polyethylene.

'Mercedes' stored dry at 2 to 3 degrees C for 10 or 17 days had nine times higher ethylene production rates compared to non-stored controls.

Roses can be vacuum cooled equally well as forced-air cooled with no detrimental effects. Regardless of beginning temperature, in 20 minutes under vacuum the flower temperature is in the -1

degree C range.

Generally, the longer roses are held dry in non-optimal temperature (0 to 1 degrees C) and relative humidity (95 +%) conditions, the shorter they will live at consumer level.

Maximum positive results for long term storage result when flowers are held at 0 degrees C, in vapor barriers to keep humidity high, are placed into storage right after harvest with no water treatment (this may mean that grading be done after storage), harvest stage is not too immature, and flowers are conditioned in 43 degree C solution at 5 degree C air temperature right after removal and prior to grading.

Petal bluing is more prominent in winter months where food supply in the flower is less. Placing roses into water at greenhouse level prior to storage is especially bad during these months as it increases bluing after storage. Hence, dry handling prior to storage is best compared to placing into water alone or a rehydration solution without sugar.

Packaging: Cultivars that have a tendency to turn bluish ('Better Times', 'Forever Yours', 'Royalty', 'Cara Mia', 'Red Success') should never be placed into an environment (like a sealed polyethylene-like package) where oxygen levels can become lowered because bluing is enhanced.

'Rouge Mielland' flowers keep 40% more tight (in the original bud harvest stage) after 3 days at 5 to 7 degrees C if wrapped in polyethylene compared to wrapping in tissue paper.

High carbon dioxide levels surrounding harvested roses may exert its influence by altering cell pH, reducing microbial problems, and/or increasing dark fixation of this gas which is known to be high in aging receptacles.

Using polyethylene packages holding 100 roses each, 12 and 24 pinholes were required to maintain optimum gas levels at 50 and 60 degrees, respectively.

Considering labor and handling costs of packaging materials, coolant, storage, packing, and transport charges as well as shrinkage factors, it is 12 and 29% cheaper to air ship roses from California to 7 US eastern cities in flat polystyrene-foam boxes and fiberboard hampers, respectively, compared to the normal flat fiberboard boxes.

Exposing a rose box to direct sunlight for as little as 1.5 hours can result in some flower temperatures reaching 18 to 22 degrees C even if they are packed in ice and were precooled. At 18 to 22 degrees C, roses respire or deteriorate about 5 times faster than at 0 degrees C.

Packaging 'Red Delight', 'Baccara', or 'Pink Sensation' in polyethylene with 6 to 7% oxygen was better than in the same package at 21% oxygen when held for 24 to 36 hours at 10 to 15 degrees C or lower. However, at 20 degrees C, 'Golden Rapture' and 'Pink Delight' were injured in the low oxygen environment.

Transport: If a well-insulated trailer can be loaded with 100% precooled flower boxes and the flower temperature be near zero, then it is better to load the boxes tight as during a normal 1 to 3 day transit time there will be little change in temperature and all the truck refrigeration system has to do is protect from outside temperature changes.

The use of bottom air delivery trailers has allowed receivers to accept roses shipped by this slower method over air because arrival conditions have been shown to be better or at least as good.

Averaged over numerous pulse treatments and also considering flowers that were not shipped or shipped by air or truck for about 2800 miles, 'Cara Mia' exhibited a vaselife of 5.2 days if precooled to 2 degrees C or 5.9 days if not precooled.

Package/freight compartments of jet aircraft can reach 115 to 130 degrees F under certain conditions which can irreversibly damage some boxed roses if held there for 2 or more hours.

Observations with 'Baccara', 'Sonia', 'Ilona' and 'Belinda' showed that their vaselife was less grown under relatively warm (30 degrees C) versus cool (23 degrees C). However, careful examination of the situation showed that they had equal vaselives if they were transported under proper temperature controls after harvest. The properly transported flowers averaged 6.0 days for the ones transported too warm.

'Cara Mia' exhibited an average vaselife of 4.5 days measured in water and a sugar-based preservative after an 18-hour air shipment (no transfer points) compared to 4.8 days after an 87-hour refrigerated truck transport period.

Pathology: Chemicals produced by microbes associated with the vase solution of 'Sonia' and/or their interaction with the flower tissue can greatly reduce vaselife of 'Sonia' but had little effect on spider chrysanthemums or 'Fleur' gerberas.

Ornalin fungicide (50% WP) is effective as a postharvest dip (1/2 to 1 tablespoon per gallon) to help control Botrytis.

Numerous fungicides can be used to control gray mold on roses. They are: benomyl (Benlate, Tersan 1991), captan (Orthocide), chlorothalonil (Daconil 2787, Exotherm Termil), dicloran (Botran), maneb (Dithane M22, Manzate), mancozeb (Dithane M-45),

iprodione (Chipco 26019) and vinclozolin (Ornalin). When sprayed on foliage or flowers at standard rates, all the fungicides with the exception of vinclozolin 50 W and benomyl 50 W, leave objectionable visible residues. Benomyl is no longer useful in controlling Botrytis cinerea in greenhouses because of the fungus' widespread resistance to benomyl. Vinclozolin is then the only fungicide that leaves a minimal residue on salable plant parts, is effective, and can be used as a postharvest application (dip).

From a bacteria population point of view, the "cleaner" rose flowers are when they are placed into -1 to 1 degrees C dry storage, the less chance that freezing damage will occur since bacteria can actually act as ice nuclei and stimulate ice formation at warmer temperatures.

Other: Dethorned roses do not produce any more ethylene than ones with thorns but do respire 30 to 40% more at 22 to 30 degrees C and result in 10 times more bacteria in a water solution plus or minus 150 ppm HQC.

Rose flowers only grow (open) during a 5 to 7 hour period that begins just before dawn and continues for 3 to 5 hours. This rhythmic pattern can be altered by changing the day/night ratios and the growth can be reduced by either continuous light or dark.

Dethorned roses placed into water resulted in a glucose equivalent level in the water 4 times that of the intact controls suggesting that this sugar is the basis for microbial growth which is substantiated by the results that show HQC treated water results in higher levels of glucose since the microbial growth is reduced.

A 1981 survey of 145 top wholesalers in the U.S. showed that 47% of them believed roses should last at least 2 or 3 days longer and that 45% of them believed that their coolers for roses have inadequate temperature control. In fact regarding the latter point, about 90% of their coolers are not capable of properly storing roses.

To reduce physically damaging flower heads, roses should not be stacked on grading and other types of tables.

In the normal distribution of roses, wholesalers have the least to do in determining vaselife at consumer level whereas the roles of growers and retailers are much more critical. Temperature control and the use of a sugar-based preservative are the two key factors in determining vaselife.

History has shown on a number of occasions that various foam materials when used under certain conditions can reduce vaselife. However, with newer foam materials and improved manufacturing

techniques it would be unfair to state today that foams are detrimental if used according to directions.

Keys to Success - Roses

o Grower practices greatly influence postharvest characteristics probably as much or more than any other flower type. Hence, growers should pay special attention to and keep records of how these various grower-controlled practices alter postharvest performance.

o The higher the light intensity roses are grown under, the longer the vaselife.

o Heat and/or light induced stresses are especially damaging when the buds are 3/4's mature.

o Cultivar selection results in a 7 to 9 year investment for growers. Therefore, consider postharvest as well as production characteristics in making this decision. Also note that no consumer research data supports the 70 or so % red cultivars that are grown: so why grow so much red?

o Pay special attention to N and K levels and the ratio of these two elements.

o Each cultivar can have its own proper stage of harvest that each grower has to learn about under each condition. Also, the same cultivar may need to be harvested at a more mature stage in winter months.

o Rehydrating solutions can be beneficial when used with cultivars that exhibit water stressed symptoms like bent neck. However, the treatment period should be minimal, generally lasting less than 45 minutes at room temperatures.

o No pulse treatment at grower/shipper level can replace the use of sugar-based preservatives at retail/consumer level.

o Dry handling with some water stress is often beneficial if the receiver knows how to rehydrate them.

o The best sugar-based preservative must be determined by individuals at every level as their effectiveness depends greatly on water quality and concentration used.

o STS containing products will only work when the flowers are exposed to ethylene under rather warm temperatures.

o Preservatives with aluminum sulfate are generally very good.

o Remove foliage that will be under water.

- Recutting is essential, either in air or under water.

- Precooling is essential.

- High relative humidity is also critical, therefore, use a vapor barrier when storing or holding roses, regardless of the length of time.

- Dethorned roses must be put into a sugar-based preservative containing a germicide and not into plain water since the latter will greatly decrease vaselife.

"Part Five"

Speciality Cut Flowers

Definition: A recent private survey found that approximately 6% of the floral production area in North America is devoted to a class of floriculture referred to as "speciality cut flowers". While there is no precise definition as to what constitutes this class of flowers, the following features would encompass the general characteristics of what is known as "speciality cut flowers".

- Grown mostly as field crops (outside) versus in greenhouses;

- Most species are classified as herbaceous perennials or annuals while some are woody perennials;

- Many growers are diversified into other crops and/or businesses;

These flower species are listed here in order for the Jordanian flower growers to expand their list of potential cut flower crops to grow and market. In short, there is more to entering the international cut flower arena than having roses, carnations and gypsophila! We believe that at least a few of the following species might be suitable for both production in Jordan and salable to certain attainable export markets.

Table 21. Common genera - unknown ethylene sensitivity or non ethylene sensitive. Namely, speciality cut flowers that either are not sensitive to ethylene or research to make such a determination is lacking are now listed.

Anthemis (Chamomile)
Aster (Michaelmas Daisy)
Astilbe (Spiraea)
Baptisia (False Indigo)
Callistephus (China Aster)
Celosia (Cockscomb)
Chrysopsis (Golden Aster)
Coreopsis (Tickseed)
Cosmos
Dahlia
Echinacea (Purple Coneflower)
Echinops (Globe Thistle)
Erigeron (Fleabane)
Eryngium (Sea Holly)
Geranium (Cranesbill)
Goniolimon (German Statice)
Helenium (Sneezeweed)
Helianthus (Sunflower)
Lavandula (Lavender)
Liatris (Gay Feather)
Limonium (Statice)
Linum (Flax)
Lunaria (Money Plant)
Lychnis (Catchfly)
Lythrum (Loosestrife)
Oenothera (Evening Primrose)
Paeonia (Peony)
Papaver (Poppy)
Penstemon (Beard Tongue)
Physalis (Chinese Lantern)
Platycodon (Balloon Flower)
Ratibida (Prairie Coneflower)
Salvia (Sage)
Solidago (Goldenrod)
Tagetes (Marigold)
Venidium (Cape Daisy)
Zinnia

Table 22. Common genera - ethylene sensitive: speciality cut flower genera and common names that are sensitive to ethylene are listed below.

Achillea (Yarrow)
Aconitum (Monkshood)
Agapanthus (African Lily)
Alchemilla (Lady's Mantle)
Allium (Ornamental Onion)
Anemone (Windflower)
Anethum
Antirrhinum (Snapdragon)
Aquilegia (Columbine)
Asclepias (Butterfly Flower)
Astrantia (Masterwort)
Brodiaea (Triteleia)
Campanula (Bellflower)
Centaurea (Cornflower)
Chelone (Snakehead)
Clarkia (Godetia)
Crocosmia (Montbretia)
Daucus (Queen-Annes-Lace)
Delphinium (Larkspur)
Dianthus (Sweet William)
Dicentra (Bleeding-Heart)
Digitalis (Foxglove)
Doronicum (Leopard's Bane)
Eremurus (Desert Candle)
Eustoma (Lisianthus)
Kniphofia (Torch Lily)
Lavatera (Tree Mallow)
Lysimachia (Loosestrife)
Phlox
Physostegia (False Dragonhead)
Ranunculus (Buttercup)
Rudbeckia (Coneflower)
Saponaria (Soapwort)
Scabiosa (Pincushion Flower)
Silene (Catchfly)
Trachelium (Throatwort)
Trollius (Globeflower)
Veronica (Speedwell)

General Guidelines for Postharvest Care

With the above division between ethylene sensitive and non ethylene sensitive genera noted, growers can now simply follow the care procedures outlined previously in this section. However, there are a few special considerations that need to be

briefly expanded on below.

Special Consideration

Since these flowers are grown mostly outdoors and therefore may contain more dirt and debris at the time of harvest compared to greenhouse grown flowers, special care procedures that should be considered such as:

Sanitation: Keeping the stems free of dirt and debris at harvest may involve simple procedures such as keeping harvested flowers off of the ground and not splashing soil and debris on the plants and flowers during irrigation. Remember, dirtier stems can mean premature stem blockage with resulting shorter end user life.

Water stress: Hydration procedures need to be strictly followed to prevent premature wilting.

Ethylene: If STS is used at field level, care must be taken not to expose the solution to direct sunlight as the STS will rapidly deactivate in a similar fashion as exposing undeveloped film to light. In addition, proper silver disposal procedures should be used, if not for legal reasons, for environmental ones.

Temperature: Temperature management of cut flowers after harvest can be more difficult for those grown outdoors. For example, flower temperatures can increase rapidly after harvest during the process of getting the flowers to the processing/precooling area. Increased flower temperatures can cause an array of problems such as premature wilting, increased chances of ethylene-induced problems and excessive flower development.

Effective temperature management can be as simple as providing shade for the harvested flowers and rapidly moving the flowers from the field to the grading/bunching/shipping area to avoid heat stress. Once inside, more conventional temperature management systems can be used such as forced air precoolers.

The use of portable "wet coil" precoolers used in the field may also be possible. Such precoolers consist of a fan, manifold for air distribution and a cooling pad, the same type as described in the production section of this report for cooling greenhouses by the evaporative cooling principles.

References and Additional Reading List

Reference 1. "Controlled Environment Equipment for Greenhouses.※ and ※The Greenhouse Climate Control Handbook.※ These booklets are free of charge and can be obtained from Acme Engineering and Mfg. Corp., P.O. Box 978, Muskogee, OK, 74402, United States of America.

Reference 2. An excellent source of information, equipment and supplies (essentially anything needed for greenhouse operation) is the catalog of the Fred C. Gloeckner Company. Contact Paul Daum of Gloeckner's at 11601 Biscayne Blvd., Suite 304, North Miami, FL, 33181 USA or call at 305-895-8767 or fax at 305-893-9091. For information and supplies regarding postharvest care chemicals and treatments, contact James Daly of Floralife Corporation at 120 Tower Drive, Burr, Ridge, IL 60521 USA or call at 708-325-8587 or fax at 708-325-4924.

Additional books and videos

1) Basic Floral Science video

2) Receiving and Shipping video

The above available from Floral Marketing Association, P.O. Box 6036, Newark DE 19714 USA

3) The Business Plan-Your Road map for Success, video

4) Flower and Plants Care Manual-A Contemporary Approach, book

5) Special Care for Special Flowers, video

6) Roses, from Grower to Consumer, video

7) Guide to Floral Industry Transportation, book

8) Recommended Grades and Standards for Fresh Cut Flowers

The above (3-8) publications are available from the Society of American Florists at 1601 Duke Street, Alexandria, VA 22314 USA

9) Ball Perennial Manual, book

10) Ball Redbook 15th Edition, book

11) Ball Field guide to Diseases of Greenhouse Ornamentals, book

12) Ball Pests and Disease Manual, book

13) Production and Marketing of Roses, book

14) Introduction to Floriculture, book

15) Gerbera Production, book

16) Grower Talks of Crop Culture, book

17) Diseases of Annuals and Perennials, book

18) Speciality Cut Flowers, book

19) Greenhouse Engineering, book

20) Greenhouse Operation and Management, book

Publications 9-20 above are available from Ball Publications at 335 N. River Street Batavia, IL, 60510 USA

The following books are available from the individual publisher.

21) Roses-A Manual of Greenhouse Rose Production, Roses Incorporated, P.O. Box, 99, Haslett, MI 48840 USA

22) Introduction to Floriculture by Roy Larson, Editor, Academic Press, 24/28 Oval Road, London NW1 7DX England

23) Commercial Flower Forcing by Laurie, Kiplinger and Nelson, McGraw-Hill Book Company, London, Madrid or New York

24) Holland Bulb Forcers Guide, by De Hertogh, Department of Horticultural Science, North Carolina State University, Raleigh, NC 27695-7609, USA

The Internet contains a great deal of information on floriculture. Start with Gopher or the Texas A&M University home page (http:\\aggie-horticulture@tamu.edu) and follow the links. Also, be sure to check out the North Carolina State University and University of Minnesota home pages as they contain important grower-related information.

APPENDIX A

INVESTIGATION OF A SPRAY COOLING SYSTEM FOR GREENHOUSES
By C. Von Zabeltitz and K. Luchow

INVESTIGATION OF A SPRAY COOLING SYSTEM FOR GREENHOUSES

C. VON ZABELTITZ[1] and K. LUCHOW[1]

INTRODUCTION

Many regions of the world have an arid climate with high temperatures, low air humidity and frequent sandstorms. An evaporative cooling system is often advantageous and desirable for plant production if there is enough water. Frequently good quality water (drinking water) is very scarce whereas brackish water and saltwater are available. That is the reason why new cooling systems must be constructed wherein low quality water can be used.

The following demands are made for evaporative cooling in greenhouses.

1. High cooling efficiency, characterized by a high coefficient of heat exchange.
2. Low cost of investment.
3. Low energy consumption.
4. Long operation time with low maintenance even when operating with salt and brackish water.
5. Low water consumption.
6. Resistance against sand and dust.
7. Efficient even in strong winds.
8. Even temperature distribution in the greenhouse.

Greenhouses which are cooled by evaporative cooling systems should be as tight as possible so that no warm air or dust can penetrate. Systems with a slight overpressure in the greenhouse are favoured. If the cooling system is run together with a shading system, the necessary cooling capacity can be reduced and the temperature distribution in the greenhouse can be improved.

A common method of evaporative cooling is the pad cooling system with vertical evaporative pads at the air inlet. If pad cooling systems, which are supplied with saline water, are not operated with an excess of water running through them, cement-like blockages of salt and sand compounds are the consequence (1, 2). The cooling pads become inefficient and have to be replaced at a very high cost.

For these reasons, the ITG Hannover has developed a spray cooling system meeting the demands mentioned above. It is relatively simple to build and can be added to existing greenhouses as an alternative to pad cooling systems.

EXPERIMENTAL ARRANGEMENTS

Fig. 1 shows the cross-section of the simple spray cooling construction. It consists of two chambers separated by a plastic film. The width of the whole cooler is 1 m and the width of each spray chamber is 0.5 m. A spray pipe with 15 hollow cone nozzles is installed

[1] Institute for Horticultural Engineering, Herrenhäuser Str. 2, D-3000 Hannover 21, Fed. Rep. Germany.

at the top of each chamber, with a distance between the nozzles of 0.6 m. The spray cooler is constructed of timber and covered with plastic film (Fig. 2). It is installed at the sidewall of a double-span greenhouse. The spray cooler is 9.0 m long, 1.0 m wide and 2.0 m high.

The air is sucked through the greenhouse by two axial fans and enters from the outer upper side into the cooler. First the air moves concurrent with the water sprayed by the first nozzle pipe, is then diversted over the water reservoir at the bottom and finally moves counter-current to the water from the second nozzle pipe. The air enters the greenhouse at the top and meets a diversion film on which water drops carried over in the air stream are deposited. This method of drop deposition is not entirely satisfactory and further investigations have been made to improve performance. By diverting the airstream over the water surface, sand particles are deposited when the air direction changes.

The water basin holds 3 m^3 of water. The evaporated water is continously replenished.

The polyvinylchloride (PVC) nozzles are self-made and developed at the ITG Hannover. Fig. 2 shows a cross section of the nozzle. The dimensions are

d_F = 8 mm
d_1 = 52 mm
d_2 = 30 mm
d_e = 5 mm
d_a = 3 mm

The aim of the experiments was to gain information about the operational behaviour of the spray cooler in different modes of operation and the effects on the greenhouse climate.

The parameters for the spray cooler operation are the water pressure at the nozzles as a measure of the drop size and the quantity sprayed as well as the operating modes of concurrent flow, counter-current flow and the combined system of concurrent and counter-current flow. In case of concurrent or counter-current flow only one pipe with 15 nozzles was used, the combined system required two pipes with 30 nozzles. The total water flow in each experiment depends on the nozzle pressure and the number of nozzles used. The air flow was maintained constant at all experiments. The relation between nozzle pressure and total water flow can be seen in Table 1. On the one hand, the results refer to one nozzle pipe with concurrent or counter-current flow (A), on the other hand they refer to two nozzle pipes with concurrent and counter-current flow (B).

The following quantities were calculated for the presentation of results.

The water/air coefficient is the ratio of the mass of sprayed water to air flow:

$$E = mw/ml \text{ (kg water/kg air).}$$

As the air flow is constant, E is a direct measure for the waterflow.

The heat exchange efficiency is the ratio of actual cooling (ti - ta) to maximum achievable cooling (ti - tk) at adiabatic change of state :

$$(t) = (ti - ta)\ 100 / (ti - tk) \text{ (in percent)}$$

The minimum temperature achievable by adiabatic cooling tk can be calculated by using the enthalpie-water content-diagram from Mollier.

RESULTS

The results are presented in terms of the heat exchange efficiency versus nozzle pressure. Fig. 3 shows the dependance of heat exchange efficiency on water pressure and operating mode. During these experiments air humidity varied from 30 to 80% at the air inlet. The band of width in Fig. 3 bases on an insignificant inaccuracy of measurement, because the heat exchange efficiencies have been calculated by very small differences quotients.

At the same operating mode the heat exchange efficiency as a measure of cooling effect increased with increasing pressure, that means with decreasing drop diameter and increasing water flow. The operating modes, however, differ significantly. In the case of concurrent flow comparable heat exchange efficiencies are reached at a considerably higher pressure than in countercurrent operation due to a better mass transfer in the latter case. A combined system of direct current and counter-current produces a high exchange efficiency at low working pressures. The heat exchange coefficient both of the combined and the counter-current system will not be much increased by higher pressures. At the same working pressure two nozzle pipes will deliver more water than only one.

The heat exchange efficiencies for the different modes of operation with respect to the water/air coefficient are shown in Fig. 4. As the fan output was kept constant the water/air coefficient is directly proportional to the amount of water used. Increasing the amount of water sprayed will also increase the achievable cooling capacity. In case of comparable water/air coefficients the counter-current system has a better cooling efficiency than the concurrent system. The combined system delivers comparable heat exchange efficiencies at larger water/air coefficients. From the results from Fig. 3 and 4 one can see that by use of the countercurrent system a cooling capacity nearly as high as that of the combined system could be accomplished at a lower expense. The conditions inside the greenhouse during cooling operation are described in (3).

The cooling system has been changed because of the problems with the drop entering to the greenhouse and the advantage of the counter-current flow, Fig. 5. The first chamber is a counter-current spray cooler and the second chamber is a very simple drop seperator. Rigid plastic-sheets are placed in the longitudinal direction of the cooler, so that the cooled air is turning around the sheets. First experiments have shown that the problem of penetrating droplets into the greenhouse can be solved by this simple construction.

CONCLUSIONS

By means of a very simple spray cooling system heat exchange efficiencies approaching 100% and thus temperature decreases even at high irradiation in an unshaded greenhouse could be achieved. The results are comparable or even superior to those of corresponding pad cooling systems with high installation cost. The spray cooling system is easy to build. Comparing all results, the conclusion can be drawn that one nozzle pipe with counter-current flow is the most effective system of the spray cooler. The counter-current system revealed better results than the concurrent system at same pipe pressure and water flow rate.

A combined concurrent and counter-current system with comparable heat exchange efficiencies means higher installation costs and therefore it is not recommendable.

BEST AVAILABLE COPY

1. von Zabeltitz, C. 1989. Gartenbau und Gewächshaustechniken in Kuwait (Horticulture and greenhouse technology in Kuwait). Deutscher Gartenbau. 43 (25) : 1566-1576.
2. von Zabeltitz, C. 1992. Gewächshauskühlung in Wüstengebieten (Cooling of a greenhouse in the desert). Deutscher Gartenbau. 43 (25) : 1570-1573.
3. Lüchow, K. and C. von Zabeltitz 1992. Investigation of a spray-cooling system in a plastic-film greenhouse. Journal Agric. Eng. Res. 52 p. 1-10.

BEST AVAILABLE COPY

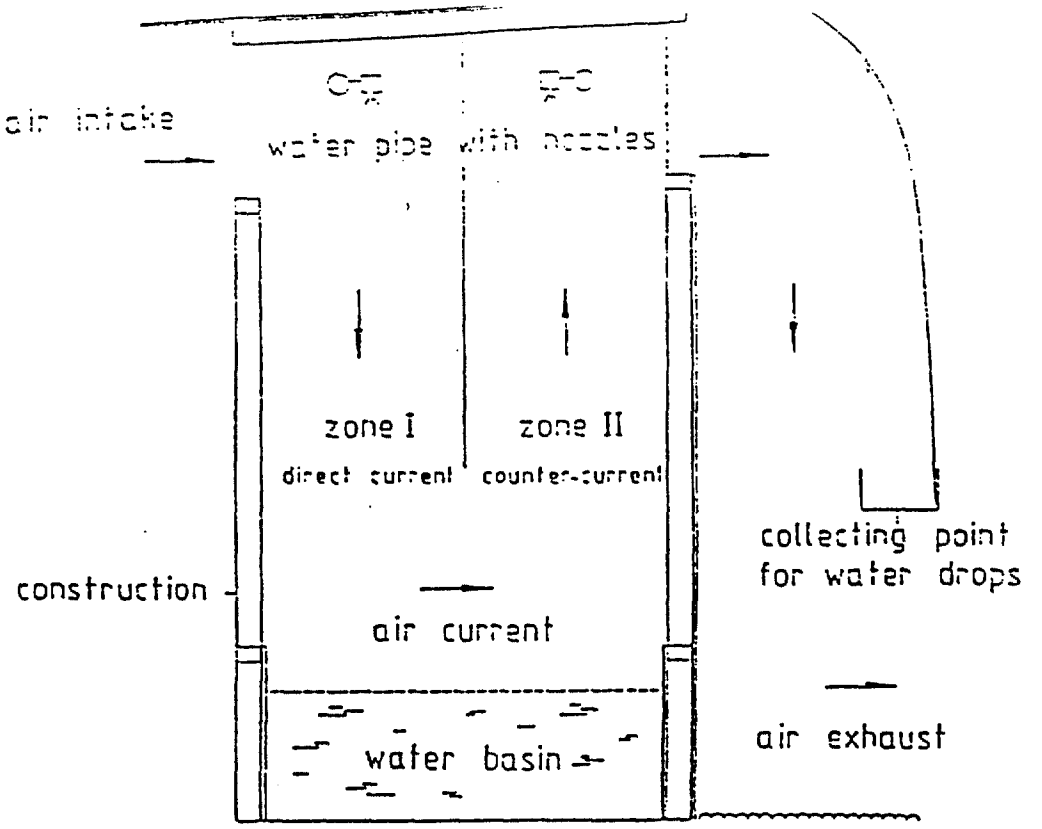

Fig. 1: Cross section of the spray cooling system in the greenhouse

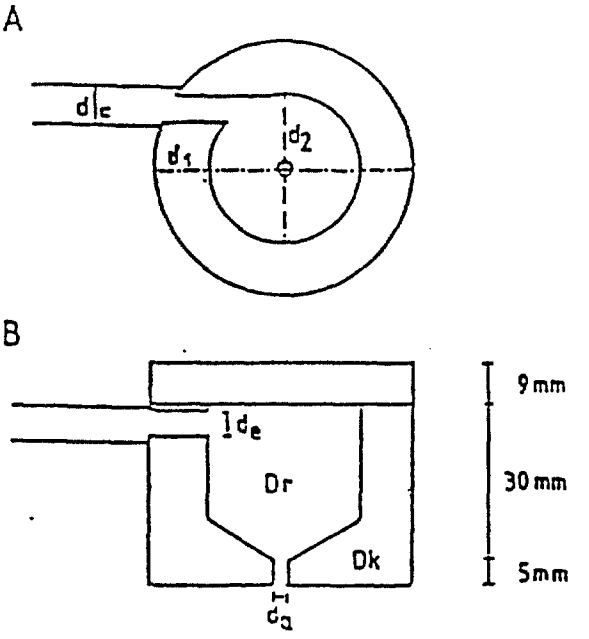

Fig. 2: Drawing of the nozzles.

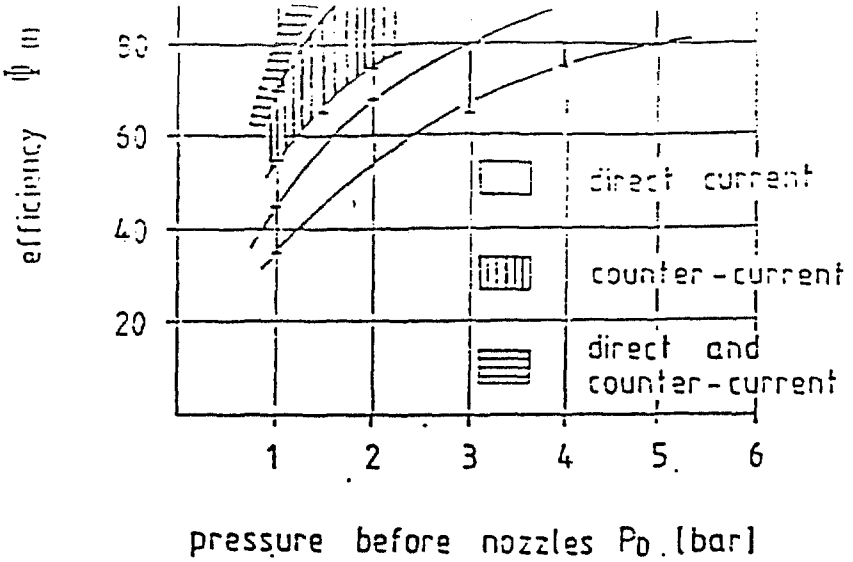

Fig. 3: The heat exchange efficiency of the cooler $\Phi_{(t)}$ depending on different nozzle pressures p_d and operating modes with $\Phi_{(t)} = (t_l - t_a)/(t_l - t_k)$ (%).

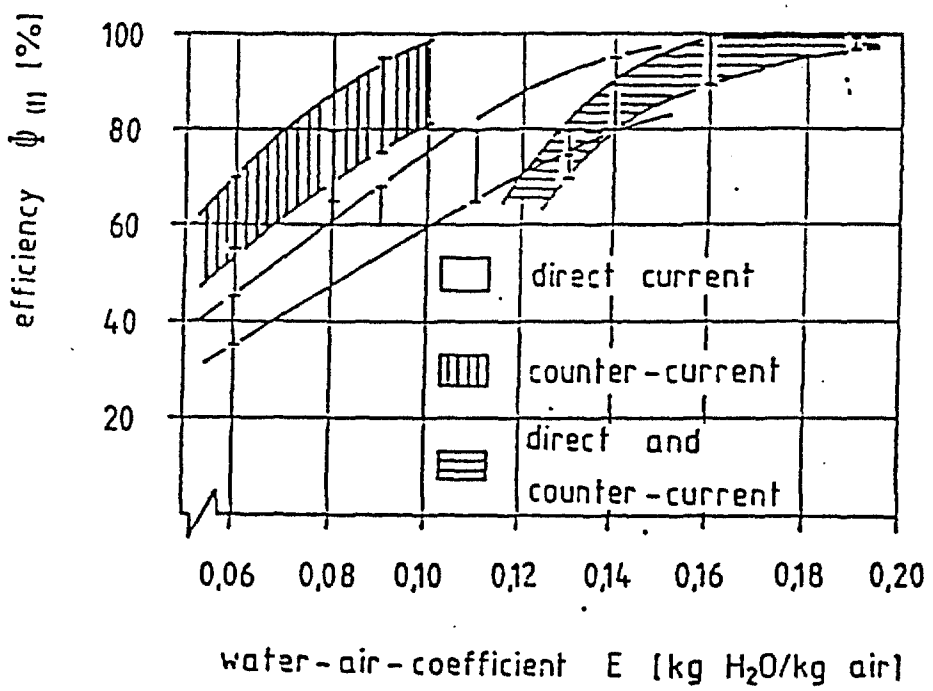

Fig. 4: The heat exchange efficiency $\Phi_{(t)}$ depending on water/air coefficient E, with $\Phi_{(t)} = (t_l - t_a)/(t_l - t_k)$, $E = m_w/m_l$ (kg water/kg air).

142

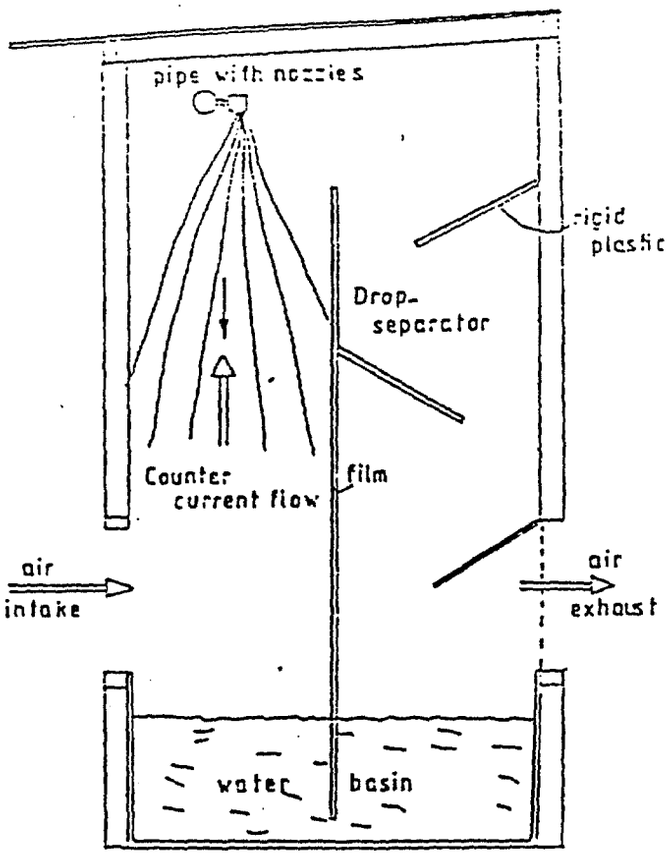

Fig. 5: Cross section of the improved cooling system.

APPENDIX B

DESIGN AND INSTALLATION MANUAL for TURBULENT TWIN WALL DRIP TAPE
and
CANE TURBULENT DRIP TAPE

DESIGN & INSTALLATION MANUAL

FOR

TURBULENT TWIN WALL DRIP TAPE

&

CANE TURBULENT DRIP TAPE

Chapin WATERMATICS INC.

"The Leader in Drip Irrigation since 1960"

740 Water St. • Watertown, N.Y. 13601

Phone (315)782-1170 • (315)782-1490 FAX

145

The information contained in this manual has been gathered from sources we deem reliable, accurate and informative. However, the authors, publishers, manufacturers and distributors of Chapin products are not, through the distribution of this manual, to be considered as rendering engineering, hydraulic, agronomic or other professional advice.

First Edition 1979
Second Edition 1992

146

TABLE OF CONTENTS

Section	Title	Page
1.0	**INTRODUCTION**	1-1
2.0	**DESIGNING A DRIP TAPE SYSTEM - Step by Step**	2-1
	Step 1: Collecting Information	2-1
	Step 2 : Field Layout	2-6
	A. Distance Between Drip Tapes	2-6
	B. Drip Tape Flow Rate	2-6
	C. G.P.M. Per Acre Calculation	2-6
	D. Water Supply In G.P.M. Required In Peak Periods	2-6
	E. Maximum Acres Per Zone	2-6
	F. Size of Zones	2-8
	Step 3: Engineering the System	2-9
	G. G.P.M. Required Per Zone	2-9
	H. Number of Zones To Be Irrigated At One Time	2-9
	I. Total G.P.M. Required For The System	2-9
	Step 4: Selecting Components	2-10
	J. Size Of Main	2-10
	K. Size Of Submain(s)	2-10
	L. Size Of Supply Tubes	2-10
	M. Drip Tape Selection Charts	2-10
3.0	**INSTALLING A DRIP TAPE SYSTEM**	3-1
	Schematic of A Typical System - From Water Source to Drip Tape Distribution	3-1
	Filters, Mains and Submains	3-2
	Placement of Drip Tape	3-3
	Mechanical Sub-Surface Installation Of Drip Tape	3-5
	Mechanical Surface Installation Of Drip Tape	3-10
	Splicing Methods	3-12
	End Closing Methods	3-13
	Submain To Drip Tape Connections	3-14
	Removal of Drip Tape	3-16
4.0	**GUIDELINES FOR TROUBLE-FREE OPERATION**	4-1
5.0	**APPENDICES**	
	Conversion Table	5-1
	Supply Tube Conversion Chart	5-3
	Friction Loss for Lay-flat Hose (PVC Discharge Hose)	5-4

LIST OF FIGURES

Figure	Title	Page
2.1	Crop and Field Information – Systems Engineering Form	2-2
2.2	Water Supply – Systems Engineering Form	2-3
2.3	Drawing Sheet for Field Sketch	2-4
2.4	Design Worksheet	2-5
2.5	G.P.M. per Acre	2-7
2.6	Water G.P.M. Peak Requirements per Acre	2-7
2.7	Typical Field Pressure Loss	2-9
2.8	Main Sizing Chart	2-11
2.9	Supply Tube Sizing Chart for 0.50 G.P.M.	2-12
2.10	Supply Tube Sizing Chart for 0.40 G.P.M.	2-13
2.11	Supply Tube Sizing Chart for 0.30 G.P.M.	2-14
2.12	Drip Tape Selection Chart	2-15
3.1	Schematic of a Typical System	3-1
3.2	Maximum Distance from Drip Tape to Plant Row	3-3
3.3	Close Placement of Drip Tape When Water Supply is High in Salts	3-3
3.4	One Drip Tape for Every Two Rows	3-4
3.5	Surface Installation with Outlets Pointed Up	3-4
3.6	Drip Tape Below Surface with Outlets Pointed Up	3-4
3.7	Single Roll Rear-mounted Reel	3-5
3.8	Reel and Blade Mounted Ahead of Operator	3-5
3.9	Three Blades and Reels Mounted on Rear of Tractor	3-6
3.10	Multi-row Tape Machine	3-6
3.11	Multi-row Tape Injector Machine	3-6
3.12	Round Pipe Blade Used to Install Drip Tape	3-6
3.13	Flat Knife Blade Used to Install Drip Tape	3-7
3.14	Reel and Blade Mounted on Tractor Tool Bar; Reel and Shaft Rotate	3-7
3.15	A Worker May Need to Hold the Drip Tape at Beginning of the Row	3-7
3.16	Laying Full Length Continuous Runs Across Field Roads	3-8
3.17	Leveling Bed Behind Blades	3-8
3.18	Threading Drip Tape from New Roll	3-8
3.19	Fumigating, Laying Mulch Film and Burying Drip Tape on Pineapple	3-9
3.20	Planting, Fumigating and Burying Two Rows of Drip Tape on Pineapple	3-9
3.21	Seed Planting Two Rows of Cane with Tape Injected in the Middle	3-9
3.22	Stand for Reeling Out Drip Tape	3-10
3.23	Wire Holders or Soil to Anchor Drip Tape in Place	3-10
3.24	Wire End Holder	3-10

LIST OF FIGURES (cont)

Figure	Title	Page
3.25	Drip Tape Connection	3-11
3.26	Drip Tape Stretched over Poinsettia Pots	3-11
3.27	Drip Tape Closed Using Tie Tape	3-11
3.28	Splicing with Wire and Rapid Twist Pliers	3-12
3.29	Splicing with Wire Ties	3-12
3.30	Splicing with Coupling	3-12
3.31	Knot Method	3-13
3.32	Sleeve for Closing End of Drip Tape	3-13
3.33	End Holder Method When Used Above Ground	3-13
3.34	Polyethylene (PVC) Submain to Deep Buried Hose	3-14
3.35	Punching Polyethylene Pipe and Inserting Supply Tube	3-14
3.36	Drilling PVC Pipe and Inserting Supply Tube	3-14
3.37	Supply Tube Drill Size	3-14
3.38	Piercing Lay-Flat Hose (PVC Discharge Hose) to Insert Supply Tube	3-15
3.39	Piercing Tool and Guide	3-15
3.40	Direct Connections	3-15
3.41	Drip Tape Remover	3-16
4.1	Troubleshooting Guidelines	4-2

INTRODUCTION

WHY CHAPIN TURBULENT TWIN-WALL DRIP TAPE?

- **QUALITY**
  - Virgin resin and rugged construction from Chapin Watermatics, Inc.
  - Since 1960 a pioneer in drip irrigation
- **MORE CHOICES**
  - Outlet spacing
  - Tape thickness
  - Feet per reel at competitive prices
  - Simple design and installation
- **HIGHER YIELDS AND QUALITY USING DRIP FOR:**
  - Row crop fruits and vegetables
  - Vines and trees
  - Nursery/greenhouse potted plants, field flowers, shrubs, trees
- **MORE EFFICIENT IRRIGATION**
  - Water is delivered directly and slowly to the root zone
  - Superior uniformity in wetting pattern
  - Improves leaching of salts away from root zone
  - Patented tortuous (turbulent) flow path resists clogging
- **DIRECT-TO-THE-ROOTS APPLICATION OF:**
  - Fertilizers
  - Pesticides
  - Soil fumigants
- **ENERGY AND LABOR-SAVING**
- **SUITABLE FOR SINGLE OR MULTIPLE CROPPING**
- **SUPERIOR CUSTOMER SERVICE AND SUPPORT**

150

TURBULENT TWIN-WALL® DRIP TAPE

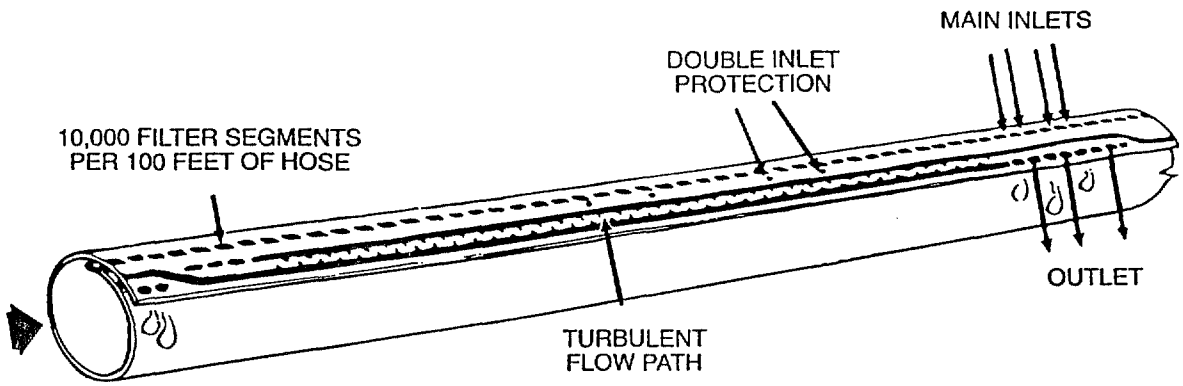

The above schematic represents typical model design. Configurations may vary with different models.

The information which follows in the "Design" and "Installation" portions of this manual are guidelines to help the user in the proper planning and installation of a drip tape system. This data should help the drip tape user realize many of the benefits of Turbulent Twin-Wall Drip Tape as described on the previous page.

Chapin

Watermatics Inc.

Pioneers in Irrigation Since 1960

U.S. Patents 4,473,191; 4,534,515; 4,572,756; 4,642,152.

1-800-448-0191

DESIGNING A DRIP TAPE SYSTEM – STEP BY STEP

Design procedure for row crop irrigation consists of the following steps:

1. COLLECTING INFORMATION
2. FIELD LAYOUT
3. ENGINEERING THE SYSTEM
4. SELECTING COMPONENTS

Step 1: COLLECTING INFORMATION

BASIC FIELD INFORMATION NEEDED

The first step is to secure all the information needed to properly plan the system. Various engineering forms are available to act as a check list in securing this information. Figures 2.1 through 2.3 illustrate a typical engineering form for drip irrigation on row crops. Figure 2.1 is the section of the engineering form dealing with location, size, slope of the field, general information about the rows, and field soil type. The phone number and the name of person contacted gives the engineer an opportunity to discuss any additional details that might come up during the planning of the system.

Figure 2.2 deals with type and size of water supply, condition of the water, and other related items.

Figure 2.3 is a drawing sheet for the grower to sketch the field.

Figure 2.4 is a design worksheet to help the irrigation designer determine how to engineer the system.

FLOW UNIFORMITY VS. COST OF INSTALLATION

Early in the design process, consideration must be given to the trade-off between ideal flow uniformity and the cost to achieve it.

Factors favoring designing for greater uniformity include:

- Water savings (water scarce/expensive)
- Over-watering of certain areas would create a problem (poor drainage, for example)
- Over or under fertilization; if this is likely to occur, greater uniformity will minimize wasting fertilizer and irregular plant growth
- Excessive run-off and heavy soil leaching conditions

Factors allowing non-uniformity (and, therefore, lower cost) include:

- Water conservation not important (water plentiful/cheap)
- Over-watering not a problem because of good drainage, no run-off
- Fertilizer not injected through the system
- Non-uniformity may affect only a small portion of the field

SYSTEMS ENGINEERING FORM

DRIP IRRIGATION
FOR ROW
CROPS

Chapin WATERMATICS INC.
740 Water St. Watertown, New York 13601
Phone 315-782-1170

Please complete this form as completely and accurately as possible. (Some items may not apply to your situation.)

FIRM NAME _____ PHONE _____

ADDRESS _____ CONTACT PERSON _____

_____

*FIELD (Name or Number) _____ PLANTING DATE _____

LOCATION _____ IS FILM MULCH USED? _____

*FIELD SIZE - Length _____ *AMOUNT OF SLOPE Inches per 100 Ft. _____

Width _____ *DIRECTION OF SLOPE _____

CROP(S) _____

*Is there a preference for direction of rows? _____ Are rows on contour? _____

If there is substantial slope, can rows be contoured? _____

*Spacing of row center to center _____ Is planting single or double row? _____

*Length of rows (distance between service roads) _____

Can row length be adjusted shorter or longer? _____

GENERAL SOIL TYPE FOR FIELD

SAND _____ AREAS IN FIELD:

LOAM _____ *EXCESSIVELY DRY _____

CLAY _____ *EXCESSIVELY WET _____

WATER HOLDING CAPACITY _____

LATERAL MOVEMENT (PATTERN) OF WATER _____

(over)

Figure 2.1. Crop and Field Information – Systems Engineering Form

WATER SUPPLY

TYPE: WELL _____

MUNICIPAL _____

POND _____

RESERVOIR _____

CANAL _____

POTENTIAL WATER PROBLEMS:

ALGAE ____ CALCIUM ____ IRON ____

SULFUR ____ CHLORIDES _____

SAND ____ SILT ____ OTHER ____

IS WATER ANALYSIS AVAILABLE? _____

IS WATER FILTERED AT PRESENT? _____

WHAT TYPE OF FILTER IS USED? _____

Delivery line size at source _____ inches

Gallons per minute available _____ at _____ PSI

*Location of source in relation to field _____ Distance _____

Is it desirable to water the entire field at one time? _____

Will you depend on the system for moisture to germinate the crop? _____

Desired Peak Application Rate in inches per week _____

Is there a possibility of drip irrigating adjoining fields in the future from the same source? _____ If so, please include a systems engineering form for such fields and indicate location in relation to this field.

Other Comments: _____

Note: Please make sketch of field on attached drawing sheet and indicate* items on sketch.

RETURN TO

Chapin WATERMATICS INC.
740 Water St. Watertown, New York 13601
Phone 315-782-1170

OR YOUR CHAPIN DEALER

Figure 2.2. Water Supply – Systems Engineering Form

IF FIELD HAS MORE THAN 1% SLOPE, PLEASE INDICATE ELEVATION FOR EACH 5 FOOT CONTOUR LINE

PLEASE SKETCH FIELD AND SHOW ALL ITEMS MARKED ON ATTACHED ENGINEERING FORM

PLEASE INDICATE NORTH

FIRM NAME	DATE
FIELD	DRAWN BY

Chapin WATERMATICS INC.
740 Water St Watertown New York 13601
Phone 315-782-1170

Figure 2.3. Drawing Sheet for Field Sketch

DESIGN WORKSHEET

(refer to pages 2-1 thru 2-14 for step by step design explanations and charts)

A.	Distance Between Drip Tape	_____ *(Row Spacing)*
B.	Drip Tape Flow Rate	_____ *(G.P.M. per 100 Feet)*
C.	G.P.M. per Acre *(Use "A" and "B" and Figure 2.5 to determine "C")*	_____ *(G.P.M. per Acre)*
D.	G.P.M. Required in Peak Periods *("C" x Total No. of Acres)*	_____ *(Peak Field G.P.M.)*
E.	Maximum Acres per Zone *("D" / "C")*	_____ *(Acres per Zone)*
F.	Size of Zones *(See Considerations Page 2-8; cannot exceed "E")*	_____ *(Zone Size, Acres)*
G.	G.P.M. per Zone *("E" x "C")*	_____ *(G.P.M. per Zone)*
H.	Desired Zone Coverage	_____ *(Max No. of Zones Irrigated Together)*
I.	Total G.P.M. Required for System *("G" x "H")*	_____ *(G.P.M. Required for System)*
J.	Size of Main *(Use "I" Result and Main Sizing Chart, Fig. 2.8)*	_____ *(Main Supply Diameter)*
K.	Submain Size *(Use "B", "A" and Layout Drawings, Figs 2.1, 2.2, 2.3)*	_____ *(Submain Size Diameter)*
L.	Size of Supply Tubes *(Use Supply Tube Charts, Figs 2.9 - 11 and Result "B")*	_____ *(Size and Length of Supply Tube)*
M.	Drip Tape Selection *(See Considerations Page 2-10 and Fig 2-12)*	_____ *(Drip Tape Selection)*

Figure 2.4. Design Worksheet

Step 2: FIELD LAYOUT

A. DISTANCE BETWEEN DRIP TAPES

Usually one drip tape is used for each crop row. However, it is sometimes possible to irrigate two rows from one drip tape by moving the two rows a little closer together and placing a drip tape in between.

Drip irrigation has also made a wide bed possible. For instance, growers have found that they can increase the plant population per acre by using four rows of plants on a strawberry bed with two drip tapes.

Conclusion A _____
(Row Spacing)

B. DRIP TAPE FLOW RATE

It is first necessary to select flow rate in the drip tape. The closer the outlets, the more flow is required per acre. No attempt is made to place outlets next to plants but rather the outlets should be close enough to give a continual wetting pattern the full length of the row.

Soils vary in water holding capacity. Generally speaking, well drained, sandy soils need a flow rate of 0.50-0.65 G.P.M. per 100 feet. This flow rate is used in most cases for such crops as strawberries, tomatoes, peppers, cucumbers, etc.

When fields have soils that are heavy or poorly drained, lower flow rates such as 0.25-0.30 G.P.M. per 100 feet are sometimes used.

Also, longer row lengths can be used with the lower flow rates.

Conclusion B _____
(G.P.M. per 100 Feet)

C. G.P.M. PER ACRE CALCULATION

Refer to chart G.P.M. Per Acre (Figure 2.5). Using the distance between drip tapes selected in "A" and Flow Rate selected in "B", read chart showing G.P.M. required.

Conclusion C _____
(G.P.M. per Acre)

D. WATER SUPPLY IN G.P.M. REQUIRED IN PEAK PERIODS

It is necessary to provide pumping capacity for the peak irrigation requirements of the field. Figure 2.6 shows the G.P.M. peak requirements per acre under different climatic growing conditions. Under most conditions, the 0.30 acre inches irrigation per day is adequate for peak requirements.

Select the acre inches per day and the desired pump running time per day and the chart shows the G.P.M. required per acre for pumping capacity. The chart is for a 7 day per week operation, but a 5 or 6 day per week operation can be calculated as indicated on the chart.

The total field requirement is calculated by multiplying the per acre G.P.M. requirement by the number of acres in the field.

NOTE

FIELDS WITH EXISTING WATER SUPPLY:
An existing water supply is ample if it meets this minimum requirement.

Conclusion D _____
(Peak Field G.P.M.)

E. MAXIMUM ACRES PER ZONE

The maximum number of acres that can be irrigated at any one time is calculated by dividing the G.P.M. of Water Supply "D" by the number of G.P.M. needed for one acre "C". This figure is the maximum number of acres that can be included in one zone.

Conclusion E _____
(Acres per Zone)

DISTANCE BETWEEN DRIP TAPE	FEET OF DRIP TAPE PER ACRE	FLOW RATE G.P.M. PER 100 FEET			
		.50	.40	.30	.25
24"	21,780	108.90	87.12	65.34	54.45
30"	17,424	87.12	69.69	52.27	43.56
36"	14,520	72.60	58.08	43.56	36.30
42"	12,446	62.23	49.78	37.34	31.11
48"	10,890	54.45	43.56	32.67	27.23
54"	9,680	48.40	38.70	29.04	24.20
60"	8,712	43.56	34.85	26.14	21.78
72"	7,260	36.30	29.04	21.78	18.15
84"	6,223	31.12	24.89	18.67	15.56
96"	5,445	27.23	21.78	16.34	13.61
108"	4,840	24.20	19.36	14.52	12.10
120"	4,356	21.78	17.42	13.07	10.89

Figure 2.5. G.P.M. per Acre

CLIMATIC CONDITIONS DURING CROP	SUGGESTED AVERAGE ACRE INCHES PER DAY	G.P.M. PER ACRE DAILY PUMP OPERATION								
		2 HRS	4 HRS	6 HRS	8 HRS	10 HRS	12 HRS	16 HRS	20 HRS	24 HRS
COOL & HUMID	.20	45.3	22.6	15.1	11.3	9.1	7.5	5.7	4.5	3.8
WARM — SEMI-HUMID	.25	56.6	28.3	18.9	14.1	11.3	9.4	7.1	5.7	4.7
WARM — DRY	.30	67.9	33.9	22.6	17.0	13.6	11.3	8.5	6.8	5.7
VERY DRY — HOT	.35	79.2	39.6	26.4	19.8	15.8	13.2	9.9	7.9	6.6
VERY DRY — HOT WINDS	.40	90.5	45.3	30.2	22.6	18.1	15.1	11.3	9.1	7.5

Figure 2.6. Water G.P.M. Peak Requirements per Acre

F. SIZE OF ZONES

In most fields it is not practical to water the entire field at one time so it is divided into zones. A zone is usually considered as the area irrigated from one valve. The size of a zone is determined by a trade-off between the several factors listed on page 2-8.

Ability to Control Areas in Field

For the following reasons, it is often important to divide the field into zones that can be controlled separately:

1. Areas of the field frequently dry out differently because of varying soil textures or different elevations.
2. Fields are often staggered for different planting and harvesting dates.
3. Access roads, irregular shaped fields, and gullies in steep hillsides often dictate areas of the field controlled by separate valves.
4. Separate zones are often needed to control pressure differences on hillside installations.

Dimension of Zone

The dimension of the zones need to be such size that they fit in well with the length and width of the field.

Maximum Size Zone

A zone cannot exceed the size calculated in "E".

Use Total Pump Capacity

It is ideal if a zone or combination of zones can use the total G.P.M. delivered by the pump. This is not as important if the water supply is from a municipal source.

Minimum Number of Valves

Having the fewest number of zones possible results in having fewer valves to turn on and off in a field. This makes running the system simpler and easier.

Convenient Row Lengths

Sometimes the size of zones are limited by the length of rows which is convenient for pickers.

Conclusion F _____
(Zone Size, Acres)

CONCLUSIONS MADE THUS FAR:

A. The distance between drip tapes
B. The flow rate for the drip tape
C. The G.P.M. required per acre
D. The G.P.M. for the field in peak periods
E. Maximum acres per zone
F. The number of acres per zone

LAYOUT OF THE FIELD – FINAL DRAWING

The information from the Engineering Form and Conclusions A - F should provide enough information to make the final drawings including:

1. Dimensions of the field
2. Dimensions of the zones
3. Length of main
4. Length of submains

REMAINING TO BE CALCULATED

1. Diameter of main
2. Diameter of submains
3. Size and length of submains

Step 3: ENGINEERING THE SYSTEM

G. G.P.M. REQUIRED PER ZONE

Multiply the number of acres per zone as selected in "E" by the number of G.P.M. per acre "C" to give the G.P.M. required per zone.

Conclusion G _____
(G.P.M. per Zone)

H. NUMBER OF ZONES TO BE IRRIGATED AT ONE TIME

The more zones watered at one time, the sooner the entire field can be watered but it takes a larger water supply.

Conclusion H _____
(Max No. of Zones Irrigated Together)

I. TOTAL G.P.M. REQUIRED FOR THE SYSTEM

Multiply the G.P.M. required per zone "G" by the number of zones watered at one time "H" to give the total G.P.M. required.

NOTE

> No more total acres can be irrigated at one time than was determined under "E" unless more G.P.M. are provided.

Conclusion I _____
(G.P.M. Required for System)

PRESSURES FOR THE SYSTEM

The increasing cost of energy makes it important to hold power requirement for pumping to a minimum. Therefore, the design of the main is based on a recommended 10 PSI maximum pressure loss over its length as shown in Figure 2.7 .

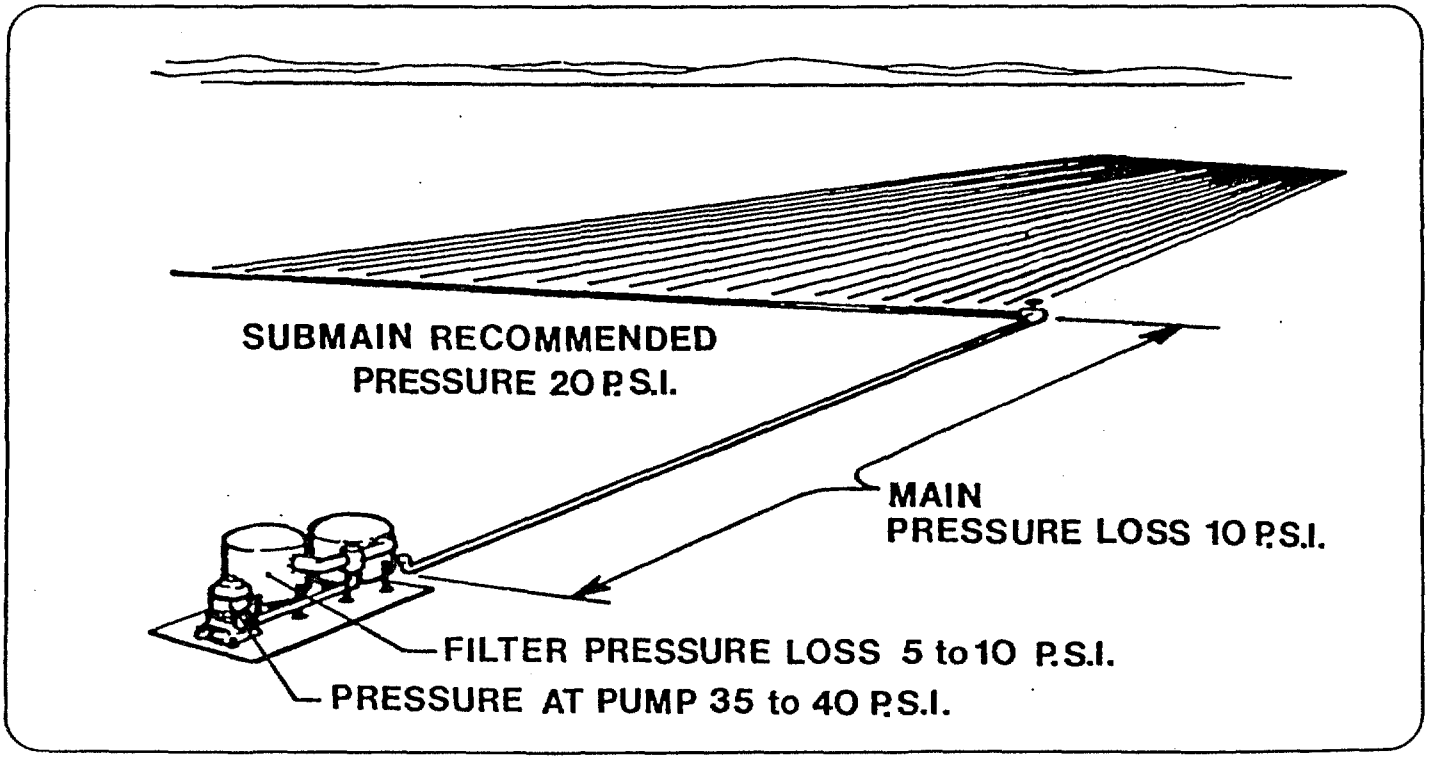

Figure 2.7. Typical Field Pressure Loss

Step 4: SELECTING COMPONENTS

J. SIZE OF MAIN

Refer to Main Sizing Chart (Figure 2.8).

1. Use length of submain from layout drawing.
2. Use total G.P.M. required for system from "I".
3. Read size of main for proper length and G.P.M.

Conclusion J _____
(Main Supply Diameter)

K. SUBMAIN SIZE

1. Use the drip tape Flow Rate selected in "B".
2. Use the drip tape spacing selected in "A".
3. Use the drip tape length from layout drawing.
4. Use the submain length from layout drawing.
5. Read the diameter of the submain required.

Conclusion K _____
(Submain Size Diameter)

The supply tube serves several functions:

1. It provides a simple, economical connection between the submain and the drip tape.

2. It provides a pressure reduction so that the drip tape can operate at a typical recommended 6-10 PSI, while the submain operates at a typical 20 PSI.

3. It provides a simple means of maintaining a uniform flow to each row on a hillside installation even though the submain pressures change with elevation.

4. "Frictionless" submains are used primarily on level ground. The principle behind this design is that all the supply tubes can be cut in equal length and have the appropriate I.D. Sizing to that pressure from the submain can be transferred directly to the drip tape.

5. When designing a field with a downward slope, an alternative to supply tube sizing is the use of pressure reducing clamps or gate valves. Every 42" of elevation difference is equal to 1.5 lbs. of pressure change and that location would be where the pressure reducing devices (clamps, valves) would be placed.

L. SIZE OF SUPPLY TUBES

Referring to the Supply Tube Sizing Chart Figures 2.9, 2.10 and 2.11, use the length of the row and the drip tape flow determined in "B" to select the right size and length of supply tube. This chart is based on a 14 PSI pressure differential across the length of the supply tube. This means the correct supply tube will meter the right amount of water to each drip tape and at the same time reduce the pressure from the recommended 20 PSI in the submain to the recommended 6-10 PSI in the drip line.

Conclusion L _____
(Size and Length of Supply Tube)

M. DRIP TAPE SELECTION CHARTS

The selection of the drip tape includes consideration of the flow rate, the outlet spacing, the roll length and maximum run length in feet, the inner tape maximum pressure, and the thickness in the wall.

The drip tape chart in Figure 2.12 shows the flow rate per 100 feet, the outlet spacing and the maximum recommended length of runs. This recommended length of run can be and is often exceeded with reasonable results. However, this practice tends to sacrifice one of the main advantages of drip irrigation, which is its uniform application of water and fertilizers over the entire field.

The drip tape with the flow rate selected in "B" should not be used for longer rows than those shown on the drip tape chart.

Four (4) mil drip tapes are used for row crops which are replanted each year or two. There is presently considerable interest in using the 15, 20, or 25 mil material buried 8 or more inches deep for crops of 3 or more years in duration.

Conclusion M _____

(Drip Tape Selection)

FOR MAXIMUM VELOCITY OF 7 FT PER SECOND AND MAXIMUM 10 PSI LOSS OVER LENGTH (FOR LEVEL RUNS ONLY)

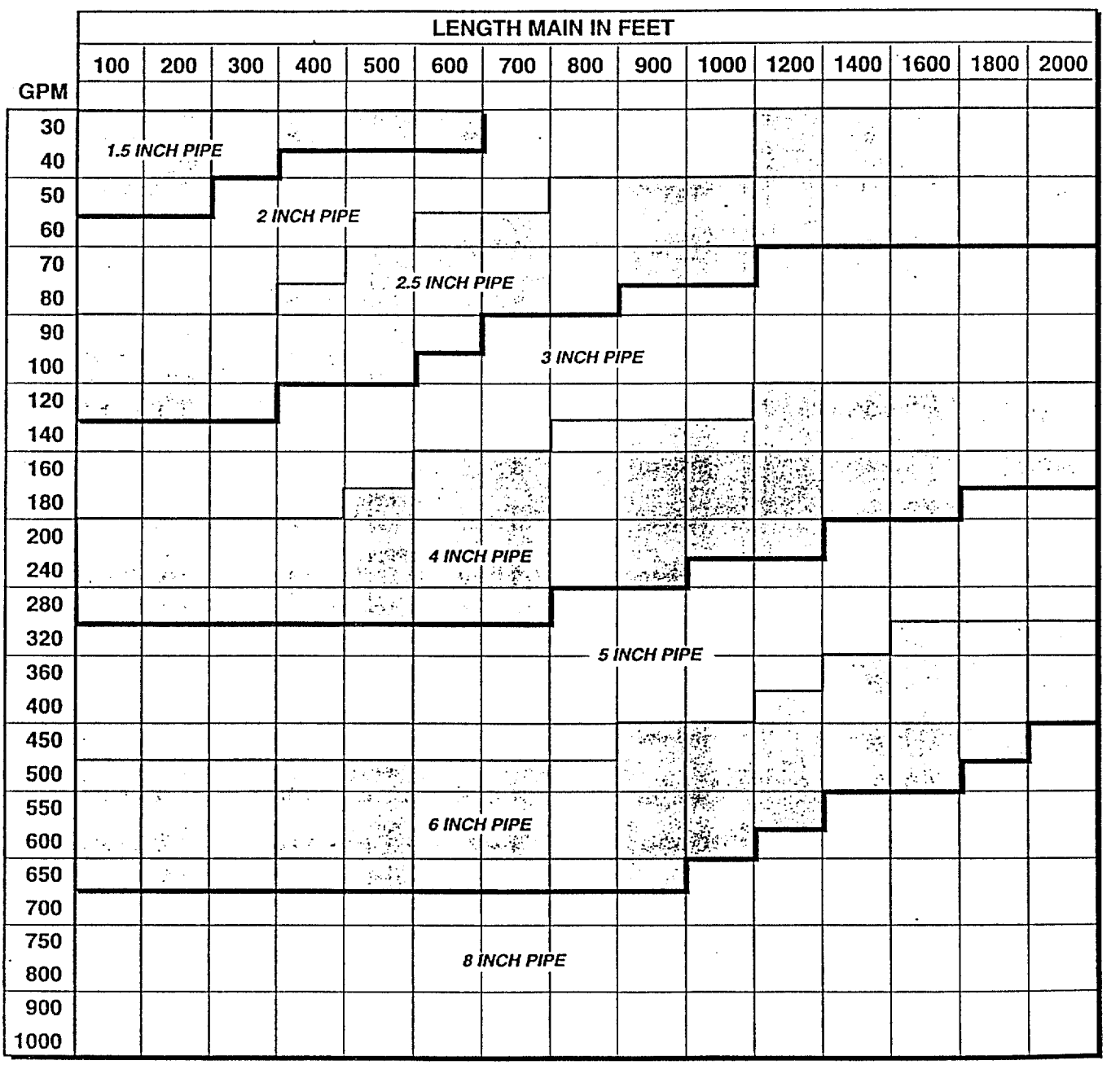

Figure 2.8. Main Sizing Chart

SIZE AND LENGTH AT 14 PSI DIFFERENTIAL PRESSURE

SUBMAIN PRESSURE 20 PSI
DRIP LINE PRESSURE 6 PSI

0.50 G.P.M. FLOW PER 100 FT
(9" OUTLETS)

ROW LENGTH	NO. TUBE	ROW LENGTH	NO. TUBE	ROW LENGTH	NO. TUBE
10-12		85-90	3 @ 60"	185-190	4 @ 36"
12-15		90-95	3 @ 54	190-195	4 @ 34
15-18		95-100	3 @ 49	195-200	4 @ 32
18-21	2 @ 74"	100-105	3 @ 46	200-210	4 @ 30
21-24	2 @ 59	105-110	3 @ 41	210-220	4 @ 26
24-27	2 @ 45	110-115	3 @ 37	220-230	4 @ 23
27-30	2 @ 37	115-120	3 @ 33	230-240	4 @ 21
30-33	2 @ 30	120-125	3 @ 30	240-250	4 @ 18
33-36	2 @ 24	125-130	3 @ 27	250-260	4 @ 16
36-39	2 @ 20	130-135	3 @ 24	260-270	4 1/2 @ 36
39-42	2 @ 17	135-140	3 @ 22	270-280	4 1/2 @ 33
42-45	2 @ 14	140-145	3 @ 20	280-290	4 1/2 @ 29
45-50	2 1/2 @ 59	145-150	3 @ 18	290-300	4 1/2 @ 27
50-55	2 1/2 @ 48	150-155	3 @ 17	300-310	4 1/2 @ 24
55-60	2 1/2 @ 40	155-160	3 @ 16	310-320	4 1/2 @ 22
60-65	2 1/2 @ 34	160-165	4 @ 52	320-330	4 1/2 @ 20
65-70	2 1/2 @ 29	165-170	4 @ 49	330-340	4 1/2 @ 18
70-75	2 1/2 @ 25	170-175	4 @ 45	340-350	4 1/2 @ 17
75-80	2 1/2 @ 21	175-180	4 @ 42	350-360	4 1/2 @ 16
80-85	2 1/2 @ 18	180-185	4 @ 39	360-370	4 1/2 @ 15

Figure 2.9. Supply Tube Sizing Chart for 0.50 G.P.M.

SIZE AND LENGTH AT 14 PSI DIFFERENTIAL PRESSURE

SUBMAIN PRESSURE 20 PSI
DRIP LINE PRESSURE 6 PSI

0.40 G.P.M. FLOW PER 100 FT
(9 AND 12" OUTLETS)

ROW LENGTH	NO. TUBE	ROW LENGTH	NO. TUBE	ROW LENGTH	NO. TUBE
13-15		106-113	3 @ 61"	231-238	4 @ 36"
15-19		113-119	3 @ 54	238-244	4 @ 34
19-23		119-125	3 @ 48	244-250	4 @ 32
23-26	2 @ 74"	125-131	3 @ 44	250-263	4 @ 29
26-30	2 @ 60	131-138	3 @ 40	263-275	4 @ 25
30-34	2 @ 45	138-144	3 @ 36	275-288	4 @ 23
34-38	2 @ 36	144-150	3 @ 33	288-300	4 @ 21
38-41	2 @ 30	150-156	3 @ 30	300-313	4 @ 18
41-45	2 @ 24	156-163	3 @ 26	313-325	4 @ 16
45-49	2 @ 20	163-169	3 @ 24	325-338	4 1/2 @ 36
49-53	2 @ 17	169-175	3 @ 21	338-350	4 1/2 @ 32
53-56	2 1/2 @ 70	175-181	3 @ 19	350-363	4 1/2 @ 29
56-63	2 1/2 @ 57	181-188	3 @ 18	363-375	4 1/2 @ 27
63-69	2 1/2 @ 48	188-194	3 @ 17	375-388	4 1/2 @ 24
69-75	2 1/2 @ 40	194-200	3 @ 15	388-400	4 1/2 @ 22
75-81	2 1/2 @ 33	200-206	4 @ 52	400-413	4 1/2 @ 20
81-88	2 1/2 @ 29	206-213	4 @ 48	413-425	4 1/2 @ 19
88-94	2 1/2 @ 24	213-219	4 @ 45	425-438	4 1/2 @ 17
94-100	2 1/2 @ 21	219-225	4 @ 42	438-450	4 1/2 @ 16
100-106	2 1/2 @ 18	225-231	4 @ 39	450-463	4 1/2 @ 15

Figure 2.10. Supply Tube Sizing Chart for 0.40 G.P.M.

SIZE AND LENGTH AT 14 PSI DIFFERENTIAL PRESSURE

SUBMAIN PRESSURE 20 PSI
DRIP LINE PRESSURE 6 PSI

0.30 G.P.M. FLOW PER 100 FT
(9 AND 12" OUTLETS)

ROW LENGTH	NO. TUBE	ROW LENGTH	NO. TUBE	ROW LENGTH	NO. TUBE
15-18		128-135	2 1/2 @ 20"	278-285	4 @ 47"
18-23		135-143	2 1/2 @ 18	285-293	4 @ 44
23-27		143-150	3 @ 60	293-300	4 @ 41
27-32	2 @ 84"	150-158	3 @ 54	300-315	4 @ 38
32-36	2 @ 71	158-165	3 @ 50	315-330	4 @ 35
36-41	2 @ 54	165-173	3 @ 45	330-345	4 @ 30
41-45	2 @ 45	173-180	3 @ 42	345-360	4 @ 27
45-50	2 @ 37	180-188	3 @ 38	360-375	4 @ 24
50-54	2 @ 30	188-195	3 @ 35	375-390	4 @ 22
54-59	2 @ 24	195-203	3 @ 31	390-405	4 @ 20
59-63	2 @ 21	203-210	3 @ 29	405-420	4 @ 18
63-68	2 @ 18	210-218	3 @ 26	420-435	4 1/2 @ 40
68-75	2 1/2 @ 72	218-225	3 @ 24	435-450	4 1/2 @ 36
75-83	2 1/2 @ 60	225-233	3 @ 22	450-465	4 1/2 @ 33
83-90	2 1/2 @ 49	233-240	3 @ 20	465-480	4 1/2 @ 29
90-98	2 1/2 @ 42	240-248	3 @ 18	480-495	4 1/2 @ 26
98-105	2 1/2 @ 36	248-255	3 @ 17	495-510	4 1/2 @ 25
105-113	2 1/2 @ 31	255-263	4 @ 59	510-525	4 1/2 @ 23
113-120	2 1/2 @ 27	263-270	4 @ 54	525-540	4 1/2 @ 21
120-128	2 1/2 @ 24	270-278	4 @ 50	540-555	4 1/2 @ 19

Figure 2.11. Supply Tube Sizing Chart for 0.30 G.P.M.

TURBULENT TWIN-WALL & CANE TURBULENT DRIP IRRIGATION TAPE

- **EXCLUSIVE INTERNAL INLET FILTER**
  - 10,000 filters every 100 feet
  - 15 times the internal filter area compared to others
- **EXCLUSIVE DOUBLE INLET PROTECTION**
  - Extra inlet orifices for further protection
- **TURBULENT FLOW PATH**
  - Evens the flow rate over rough terrain or long runs
  - Reduces possibility of clogging
- **DROPS FALL TO SOIL**
  - Outlets are on top, but off-center
- **TRUE DRIP FLOW**
  - No squirts; water flows from the outlets in true drip form
- **INSIDE DIAMETERS**
  - 5/8"
- **LENGTH OF RUNS**
  - 300 feet for .50 gal flows
  - 500 feet for .30 gal flows
  - See flow curves for more detailed information
- **FILTRATION**
  - 150 mesh minimum or 100 microns or less for all tape
- **MIL THICKNESS SELECTIONS**
  - 4 mil only for single season crops, experienced growers, fumigated soil without insects, no rocks or heavy soils
  - 8, 10, 15, 20 mil for longer life and more difficult conditions
  - 25 mil for vines and landscape

COMMON TAPE SELECTIONS AND FLOWS (GPM/100 FEET)*		APPLICATIONS
12" SPACINGS	.25 GPM	COTTON, PINEAPPLE
12" SPACINGS	.30 GPM	
9" SPACINGS	.30 GPM	STRAWBERRIES, TOMATOES, PEPPERS, MELONS, CAULIFLOWER
9" SPACINGS	.50 GPM	
12" SPACINGS	.50 GPM	
2" SPACINGS	1.50 GPM	CUT FLOWERS
4" SPACINGS	1.00 GPM	
24" SPACINGS	.30 GPM	SUGAR CANE, COTTON, VINES, LANDSCAPE

** Consult irrigation designers or other professionals for engineering, hydraulic and/or agronomic advice.*

Figure 2.12. Drip Tape Selection Chart

		4 MIL			8 MIL			10 MIL			15 MIL		
FEET/ROLL		1000	7500	15,000	1000	4000	8000	1000	3000	6000	1000	2000	4000
OUTLET SPACING	FLOW GPM/ 100'	TURBULENT TWIN WALL MODEL NUMBERS											
2"	1.5	NA	NA	NA	NA	NA	NA	74-0150	74-2150	74-5150	75-0150	75-1150	75-3150
4"	1.0	NA	NA	NA	NA	NA	NA	74-0100	74-2100	74-5100	75-0100	75-1100	75-3100
9"	0.50	72-0050	72-4050	72-9050	73-0050	73-3050	73-7050	74-0050	74-2050	74-5050	75-0050	75-1050	75-3050
9"	0.65	72-0065	72-4065	72-9065	73-0065	73-3065	73-7065	74-0065	74-2065	74-5065	NA	NA	NA
12"	0.25	72-0025	72-4025	72-9025	73-0025	73-3025	73-7025	NA	NA	NA	NA	NA	NA
12"	0.30	72-0031	72-4031	72-9031	73-0030	73-3030	73-7030	74-0030	74-2030	74-5030	75-0030	75-1030	75-3030

		8 MIL			10 MIL			15 MIL			20 MIL			25 MIL	
FEET/ROLL		1000	4000	8000	1000	3000	6000	1000	2000	4000	1000	1500	3000	1000	2500
OUTLET SPACING	FLOW GPM/ 100'	CANE TURBULENT MODEL NUMBERS													
12"	0.25	NA	NA	NA	74-0026	74-2026	74-5026	76-0025	76-1025	76-3025	77-0025	77-1025	77-2025	78-0025	78-0025
12"	0.30	73-0034	73-3034	73-7034	74-0034	74-2034	74-5034	76-0031	76-1031	76-3031	NA	77-1031	77-2031	78-0031	78-2031
12"	0.50	73-0053	73-3053	73-7053	74-0051	74-2051	74-5051	75-0052	75-1052	75-3052	NA	77-1051	77-2051	78-0050	78-2050
18"	0.40	NA	NA	NA	74-0042	74-2042	74-5042	76-0040	76-1040	76-3040	NA	NA	NA	NA	NA
24"	0.30	73-0036	73-3036	73-7036	NA	NA	NA	76-0030	76-1030	76-3030	NA	77-1030	77-2030	78-0030	78-2030
24"	0.50	NA	NA	NA	NA	NA	NA	75-0051	75-1051	75-3051	NA	NA	NA	NA	NA

Figure 2.12. Drip Tape Selection Chart (continued)

	4 MIL			8 MIL			10 MIL			15 MIL			20 MIL		25 MIL	
FEET/ROLL	1000	7500	15,000	1000	4000	8000	1000	3000	6000	1000	2000	4000	1500	3000	1000	2500
REEL DIMENSIONS	NA	22" X 7"	22" X 13"	16" X 4"	22" X 7"	22" X 13"	16" X 4"	22" X 7"	22" X 13"	16" X 4"	22" X 7"	22" X 13"	22" X 7"	22" X 13"	22" X 7"	22" X 13"
REELS PER PALLET	NA	48	24	NA	52	28	NA	52	28	NA	52	28	52	28	52	28
REEL WEIGHT/LBS	NA	41	80	NA	40	80	13	38	74	13	36	70	31	62	29	70
PALLETS/20' CONTAINER*	NA	10	10	NA	10	10	10	10	10	10	10	10	10	10	10	10
REELS/20' CONTAINER*	NA	480	240	NA	520	280	NA	520	280	NA	520	280	520	280	520	280
FEET /20' CONTAINER* (000)	NA	3,600	3,600	NA	2,080	2,240	NA	1,560	1,680	NA	1,040	1,120	780	840	520	700
LBS/20' CONTAINER*	NA	20,080	19,600	NA	21,200	22,800	NA	19,120	21,120	NA	19,120	20,000	16,520	17,760	15,480	20,000
REC. OPER. PRESS, PSI**	6	6	6	10	10	10	10	10	10	10	10	10	10	10	10	10
OPERATING RANGE MIN/MAX PSI	4-8	4-8	4-8	4-12	4-12	4-12	4-12	4-12	4-12	4-15	4-15	4-15	4-15	4-15	4-15	4-15

* Times 2 for 40 foot container
** For best results
Manufacturer reserves the right to change specifications without notice.

Figure 2.12. Drip Tape Selection Chart (continued)

INSTALLING A DRIP TAPE SYSTEM

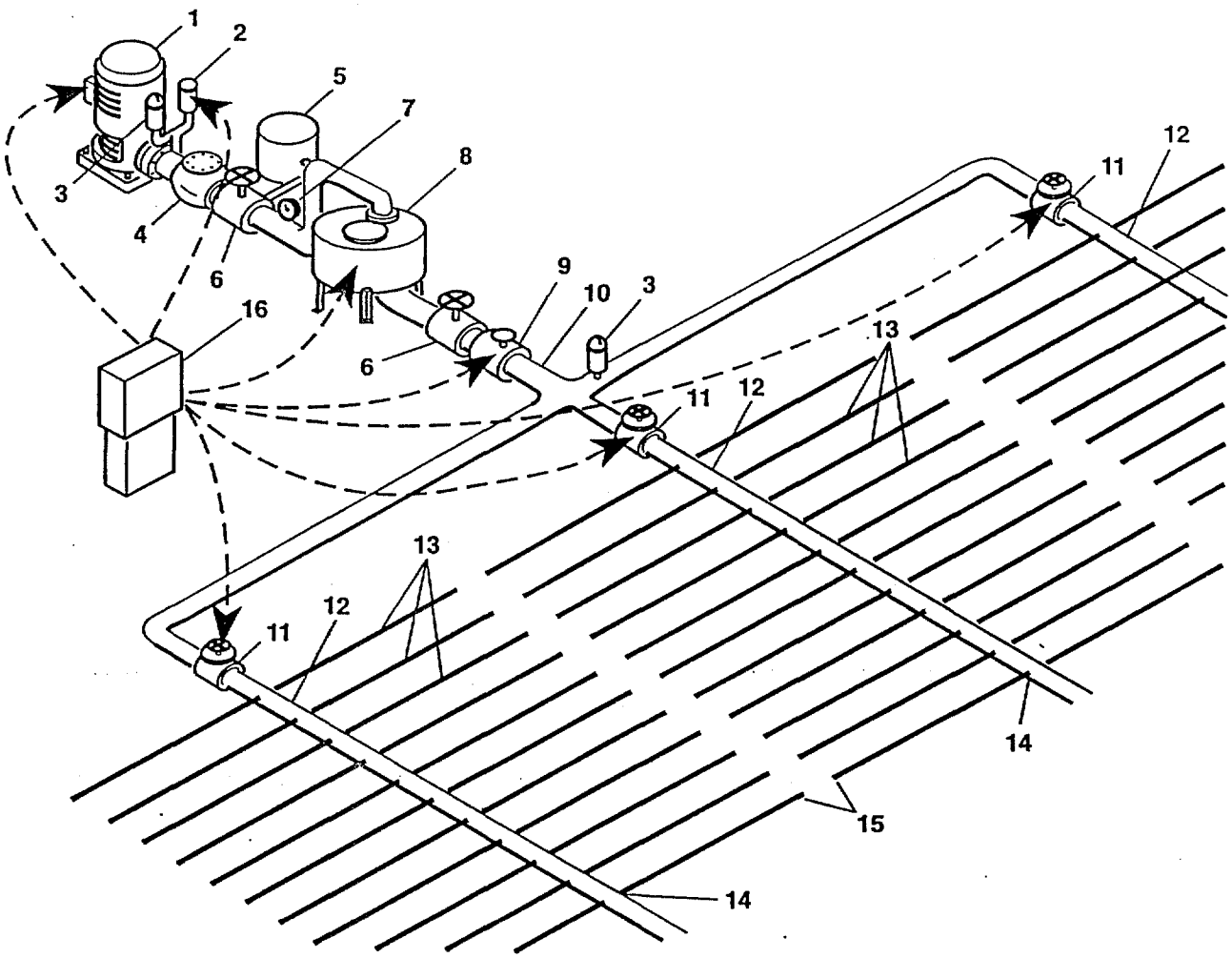

1. PUMP
2. PRESSURE RELIEF VALVE RISER
3. AIR VENTS (AT ALL HIGH POINTS)
4. CHECK VALVE
5. FERTILIZER INJECTOR OR TANK
6. MAINLINE VALVE (GATE OR BUTTERFLY VALVE)
7. PRESSURE GAUGES
8. FILTER
9. FLOWMETER
10. MAINLINE
11. FIELD CONTROL VALVES (MANUAL OR AUTOMATIC)
12. SUBMAINS
13. CHAPIN TURBULENT TWIN WALL DRIP TAPE
14. SUBMAIN TO DRIP TAPE CONNECTION
15. DRAIN/FLUSH VALVES
16. SYSTEM CONTROLLER

Figure 3.1. Schematic of a Typical System

FILTERS, MAINS AND SUBMAINS

FILTER MOUNTING AND CONNECTIONS

Most filters have a considerable weight and should be mounted on a solid foundation, preferably on a concrete pad.

The manufacturer's instructions for installation, connections, start-up and servicing should be carefully followed.

Often the inlet and outlet connections are made with victaulic fittings and clamps.

INSTALLATION OF MAINS AND SUBMAINS

The corrosion and flaking that is common to metal pipe could clog a drip system. Therefore when installing main and submain lines after the filter, plastic pipe or tape should be used. Reasonable care should be taken not to get dirt into the mains and submains during installation. Mains are usually buried deep enough so they are safely out of the way of plowing or cultivating. If submains are permanently installed, they should also be buried deep enough to be out of the way. If the submains are to be removed from the field after each crop, they can be placed in a shallow furrow at the end of the rows and covered with a few inches of soil. This will enable the equipment to have easy access to the rows. If Lay-Flat Hose (PVC Discharge Hose) is used for submains, it can either be placed in a shallow furrow or left on top of the ground.

Mains and submains that are to be buried should be backfilled the same day they are laid. This is especially true in areas where the day is hot and the night is cool. The expansion and contraction caused by the temperature change can cause the plastic pipe to pull apart and the Lay-Flat to shrink.

Lay-Flat on the surface should not be pulled absolutely straight, especially on warm days, since it will contract on a cool night. So, install Lay-Flat with some slack.

Mains and submains should not be laid on sharp rocks as damage or punctures can result.

MAIN AND SUBMAIN FITTINGS AND CONNECTIONS

When using PVC pipe, standard fittings as well as standard cementing procedures are used. Both the fitting and the end of the pipe are cleaned and primed. Then both sections are evenly coated with glue. Be sure they are well-covered but at the same time avoid excess glue that could drip off into the pipe. It could eat into the wall of the pipe and cause a future leak. When PVC pipe is cut, be sure to remove all burrs so they will not enter the system.

When available, barbed insert fittings are used to connect Lay-Flat Hose (PVC Discharge Hose). Two clamps should be used on each joint and they should be staggered so the tightening screws are not opposite one another. If barbed insert fittings are not available, standard PVC fittings can often be used. For example: A 5" PVC coupling, elbow or tee can be used as an insert fitting for 6" Lay-Flat Hose (PVC Discharge Hose). Since there are no barbs, the joint should be both cemented and clamped. The outside of the PVC fitting and inside of the Lay-Flat Hose (PVC Discharge Hose) are cemented (do not use any primer on this joint) and the hose slid over the fitting. Then the two clamps are put on.

To get good leverage to pull Lay-Flat Hose (PVC Discharge Hose) over PVC fittings, cut four triangles out of the end of the Lay-Flat. After being used to pull the Lay-Flat onto the fitting, the tabs made in the above manner can be trimmed off.

The closed off ends of both mains and submains should be left open until after the flushing operation is completed.

110

PLACEMENT OF DRIP TAPE

PRECAUTIONS FOR FIRST-TIME USERS

Before installing your first drip tape system, seek professional design, installation and agronomic advice. Your agricultural extension service or farm advisor is a good place to start.

It is wise to connect the first section of the field to the water supply before the entire field is installed. By following this procedure, any damage caused to the tape during installation or any improper design will show up in time to make corrections for the rest of the field.

It is often advisable to put a majority of the field in heavier mil tape for the first year and only a small part of the field in lighter mil. In this way, it can be determined if the lighter mil will be satisfactory for future growing seasons without risking possible negative results for the whole field.

There are 3 basic decisions to make regarding the placement of the drip tape:

1. The distance from the drip tape to the plant row
2. Whether to bury the drip tape or place it on the soil surface
3. The depth to bury the drip tape

RELATIONSHIP TO PLANTS

It is generally best to keep the drip tape as close to the plant row as practical. A maximum of a 6-inch distance from drip tape to plant row is about right when the system is used to germinate seed or a 12 inch maximum distance for transplants (Figure 3.2). This distance can also vary depending on the capacity of the soil to move water in a lateral direction rather than straight down. For instance, an 18" spacing from drip tape to plant row can be used on a crop that is not dependent on drip to get started and is grown in a soil that has good lateral water movement characteristics.

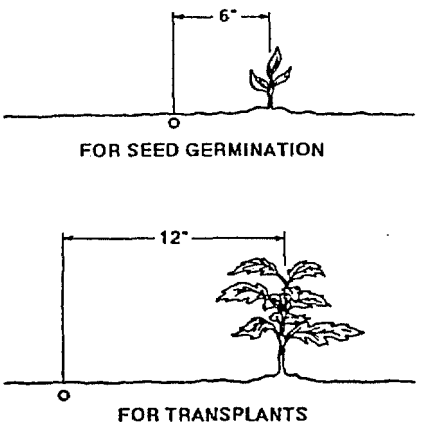

Figure 3.2. Maximum Distance from Drip Tape to Plant Row

If the water supply is high in salts, the drip tape should be as close to the plant row as possible. This provides the lowest salt level in the root zone. This is true because salts tend to move outwardly from the point where the drip enters the soil and the salt buildup is highest at the extreme edge of the wet pattern (Figure 3.3). This is evidenced by the familiar white band of salts on the soil surface at either edge of the wet pattern.

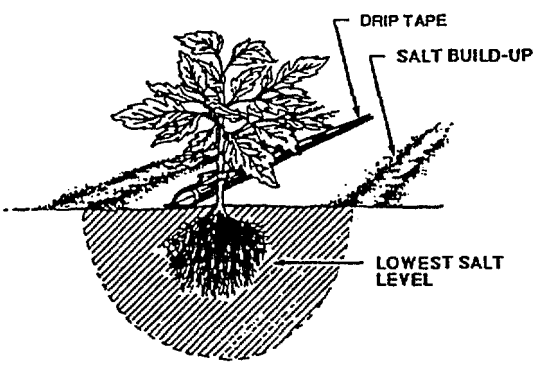

Figure 3.3. Close Placement of Drip Tape When Water Supply Is High In Salts

A grower can sometimes cut the cost of the drip tape in half by using a single row of drip tape to irrigate two rows of plants (Figure 3.4). Often a crop with a normal 3 foot spacing can be

grown with drip tape on 6 foot centers, by spacing two rows, two feet apart and then 4 feet of space to the next two rows, with a drip tape in the middle of the two foot space.

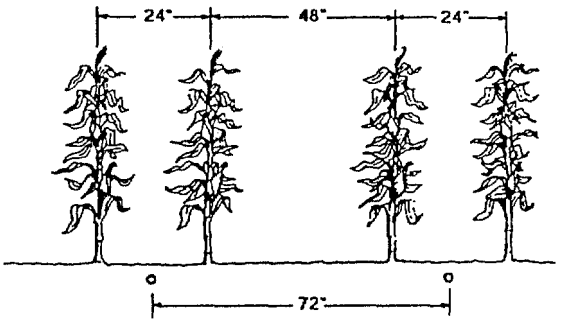

Figure 3.4. One Drip Tape for Every Two Rows

If a grower has an operation that is apt to damage the drip tape, (such as pruning strawberry plants with knives or staking tomato plants) he should either install the drip tape after this operation is completed, or place the drip tape far enough away from the plants so that, by using reasonable care, his workers can perform this operation without damaging the drip tape.

In hillside installations, the drip tape should be placed on the upper side of the plant row. This tends to center the wetting pattern in the normal root area.

BURIED OR ON SOIL SURFACE ?

BURIED

1. The problem of wind blowing the drip tape is eliminated.
2. The problem of rabbits, coyotes, mice or other pests attacking the drip tape is either greatly reduced or completely eliminated.
3. If there are high salts in the water supply, the problem of droplets of water evaporating and minerals crystallizing over the outlets can be prevented.
4. There is less surface evaporation.

SURFACE

1. Some growers wish to flip the drip tape out away from the rows, when hoeing and weeding in the row, to prevent damage to the drip tape.
2. It is a little easier to get the drip tape out of the field after the crop is harvested.
3. There is usually less damage from soil insects to drip tape on the surface, although this is not usually a problem if the field was fumigated or the soil treated for soil insects.

OUTLETS UP OR DOWN ?

When the drip tape is on top of the soil, the outlets should be pointed up (Figure 3.5).

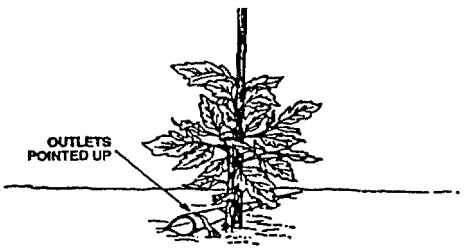

Figure 3.5. Surface Installation with Outlets Pointed Up

When drip tape is buried, the outlets should always face upward (Figure 3.6). This reduces potential clogging by allowing any silt, clay, sand or other inorganic particles, to settle down and away from the outlets.

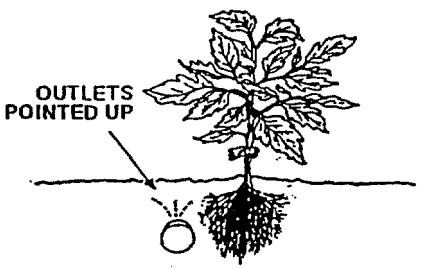

Figure 3.6. Drip Tape Below Surface with Outlets Pointed Up

DROP BY DROP APPLICATION

Drip tape is available in configurations that apply water drop by drop. Each drop falls to the ground directly adjacent to the drip tape. These configurations can be used in both surface and buried applications.

DEPTH TO BURY DRIP TAPE

Most buried drip tape is placed about 2 to 4" below the surface. At this depth, water from the drip tape easily reaches the surface by capillary action and the drip tape is easily removed after the crop.

Deep buried tape in the 6" to 10" range has been successfully used on multiple crops for a number of years (over 10 years in some cases). Regular flushing of the system, proper filtration and, depending on water analysis, the use of acids and chlorine to clean the tape, is a key to longevity and efficient drip tape operation. Always consult with experts knowledgeable in chemical injection and water analysis before the use of any chemical in your drip system.

A method often used to maintain clog-free deep buried drip tape is the installation of flush lines on the opposite end of the field from the submains. These flush lines are pressurized the same as the submains and are operated at the same time from both sides of the field.

MECHANICAL SUB-SURFACE INSTALLATION OF DRIP TAPE

Drip tape can be efficiently buried with a tractor-mounted blade and reel (Figures 3.7, 3.8 and 3.9) or with multi-row tape injector equipment (Figures 3.10 and 3.11). Other operations such as fumigating the soil, laying plastic or transplanting can be combined with the burying of either a single row or several rows of drip tape at one time.

UNWINDING THE ROLL

The mechanism to unwind the roll is important. The shaft that holds the roll on a tractor tool bar should be the same diameter as the core of the roll and it should rotate with the roll. Both sides of the roll should be supported with metal backers and an adjustable braking mechanism should provide uniform tension as the roll unwinds.

The blade can be mounted on a tool bar at the rear of the tractor as in Figure 3.7 or just ahead of the operator as in Figure 3.8, where he can watch it as he drives.

The blade can be easily mounted by clamping it to the tool bar and adjusting it so that it buries the drip tape to the proper depth.

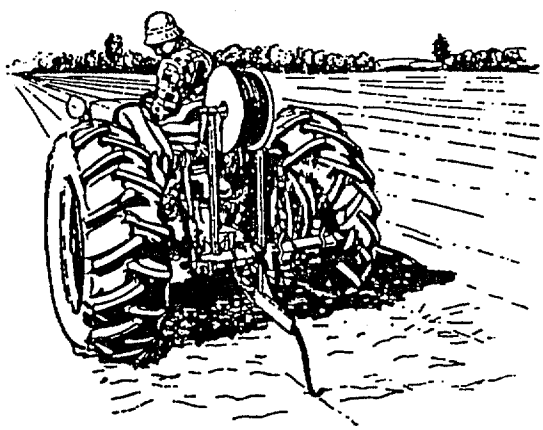

Figure 3.7. Single Roll Rear-mounted Reel

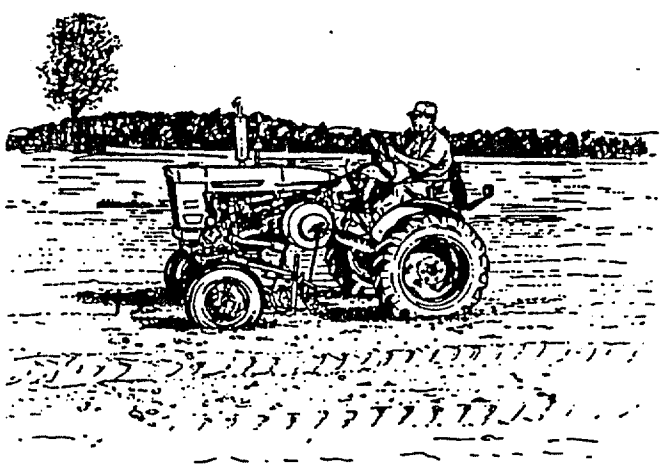

Figure 3.8. Reel and Blade Mounted Ahead of Operator

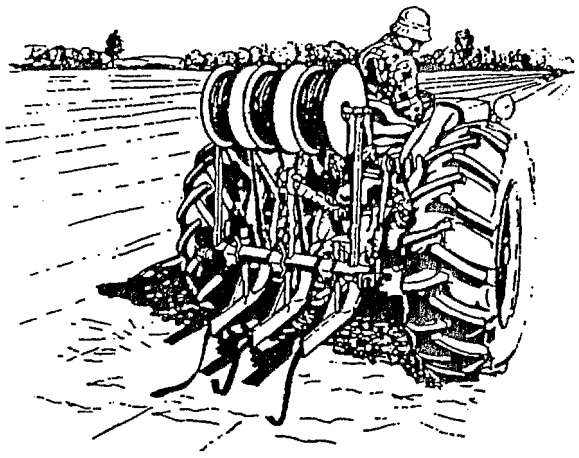

Figure 3.9. Three Blades and Reels Mounted on Rear of Tractor

Multi-row tape or drip tape injector machines like the one shown in Figure 3.10 are available in 2, 3, 4, 6 and 8-row models. The 6-row unit shown has been used for deep buried installation of tape (8" - 10"). When the tape is buried at this depth, it may last for many growing seasons (up to 10 years or more) with proper maintenance. In this deep buried long-term utilization of drip tape, minimum tillage practices are also usually employed. This includes the use of machinery which pulls, shreds, disks and mulches at minimum depth. This system results in lower water usage through the injection of deep buried drip tape, lower tillage costs and documented reductions in energy costs (fuel) and time by an impressive 50%.

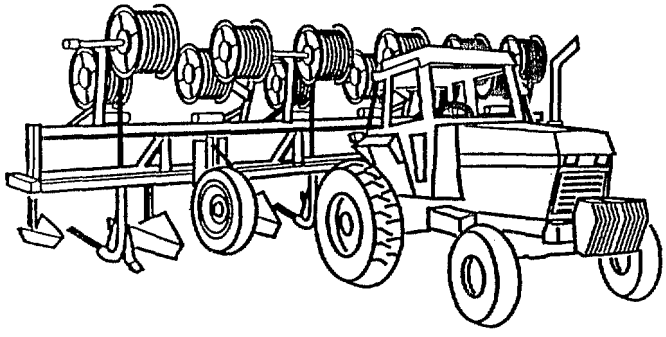

Figure 3.10. Multi-row Tape Machine

The multi-row tape injector machine in Figure 3.11 is shown performing the following combined operations for a field of peppers:

1. Injecting two tape lines 2" - 3" deep in three (3) rows 68" in width (8 mil tape, 12" spacing, 0.4 flow).
2. Bed shaping these 3 rows concurrently with the tape installation.
3. Applying a preplant fumigant just before another machine lays plastic film over each bed.

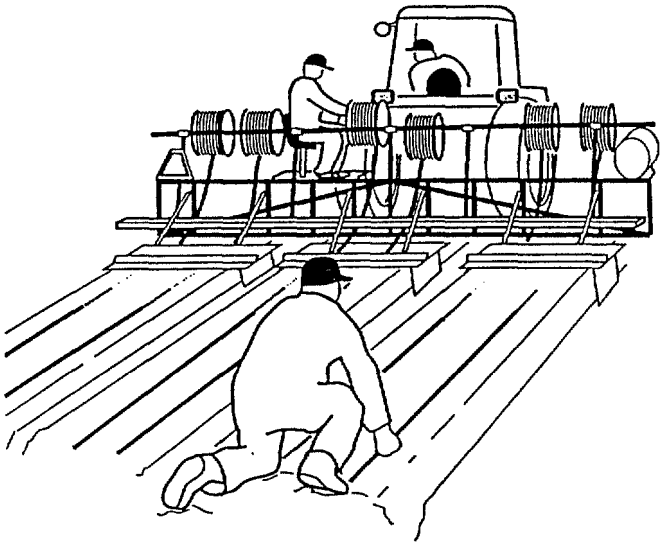

Figure 3.11. Multi-row Tape Injector Machine

INSTALLATION BLADES

There are basically two types of blades being used to install or inject drip tape in subsurface applications.

1. A round "pipe" type (Figure 3.12) which is more universally used by most growers.

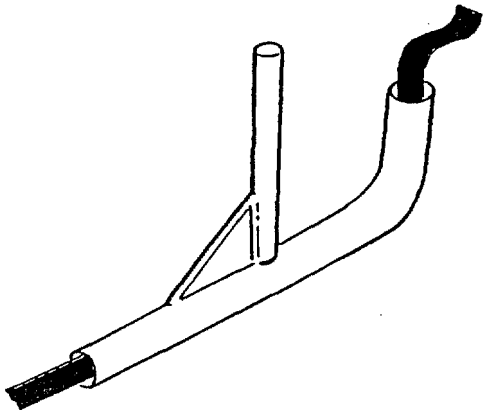

Figure 3.12. Round Pipe Blade Used to Install Drip Tape

2. A flat "knife" type (Figure 3.13) which helps the operator accurately place the tape close to a plant row.

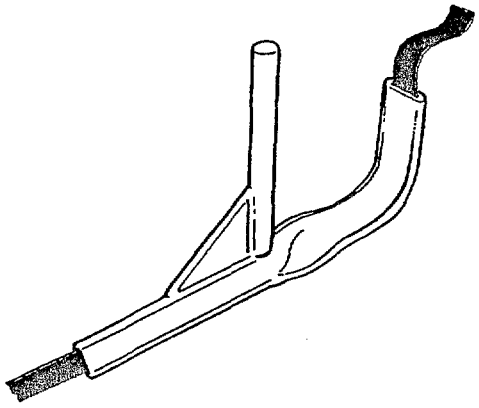

Figure 3.13. Flat Knife Blade Used to Install Drip Tape

When tape is being installed, it should never be allowed to rub against anything sharp. The entrance and exit of the installation blade should be smooth and rounded on all sides. Blades used for several seasons sometimes wear in critical areas causing sharp edges. Blades should be frequently examined for damage, especially when using light-weight drip tape.

Dirt should not be allowed to enter the blade as it can jam against the drip tape inside the blade, preventing proper laying of the tape. Therefore, during installation, be sure that the entrance of the blade is high enough to prevent any soil from entering it.

The roll of tape can be mounted on the tractor in several ways.

One method (Figure 3.14) is to mount the roll on a one-inch shaft with metal or plywood discs to hold the roll firmly and give extra support to the cardboard reels. The shaft and roll rotate together. It is the rotation of the shaft on its mount which causes a drag that slows the unwinding reel and holds the tape tight.

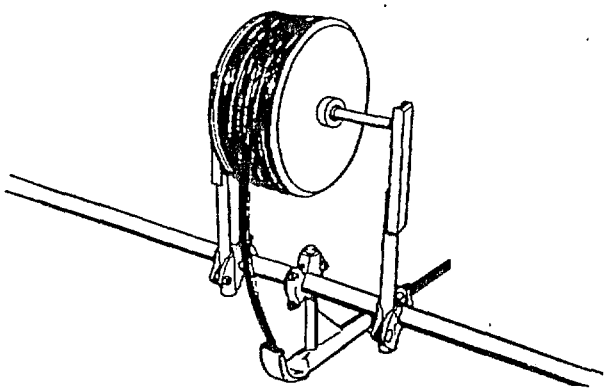

Figure 3.14. Reel and Blade Mounted on Tractor Tool Bar; Reel and Shaft Rotate

The tape should not run over any sharp objects between the roll and the blade. If it is necessary to make turns in the tape between the roll and blade, the turns should be smooth, preferably on rollers.

1. Allow 3 or 4 extra feet of drip tape at the beginning end of the row to make sure there is enough for connections.
2. The drip tape may need to be tied or held at the start of each row so that it will not pull away from the beginning end of the row (Figure 3.15). A worker can hold the end of the drip tape when the tractor starts moving. Experience will teach him how long he must hold the drip tape. After releasing the drip tape, he can follow the tractor to insure that the blade is at the proper depth and that the drip tape is going in smoothly.

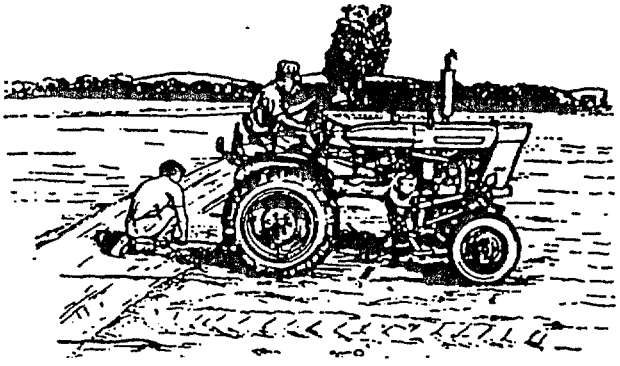

Fig 3.15. A Worker May Need to Hold the Drip Tape at Beginning of the Row

3. Be sure that workers do not walk in the plant row or on top of the drip tape. This causes unnecessary soil compaction and can even damage the drip tape.

4. When the tractor is run at a uniform speed of 3 to 4 miles per hour, the drip tape rolls out smoothly and efficiently.

5. Some growers with long fields find that it is more efficient to lay the drip tape in one continuous run extending the full length of the field, crossing any field service roads as they go, after which the short pieces across the roads are cut out. This does waste a few feet of drip tape in each row, but it greatly speeds up the operation (Figure 3.16).

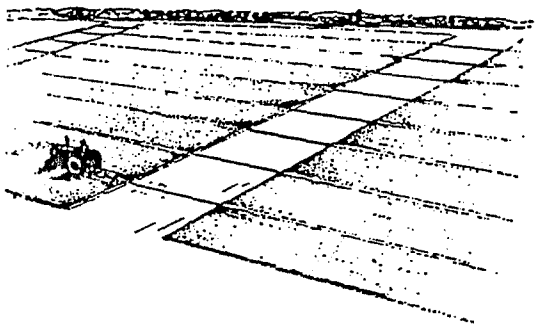

Figure 3.16 Laying Full Length Continuous Runs Across Field Roads

NOTE

> Many operators, knowing the depth of the buried tape and the soil characteristics, are able to lay the tape in place without the holding of the tape at the beginning of each row.

6. As the blade passes through the soil, it leaves a slight furrow in the bed. However, the soil surface can be easily leveled in the same operation by dragging a chain behind the tractor. The chain works better if a piece of 1/2" pipe is wired to the chain as shown in (Figure 3.17).

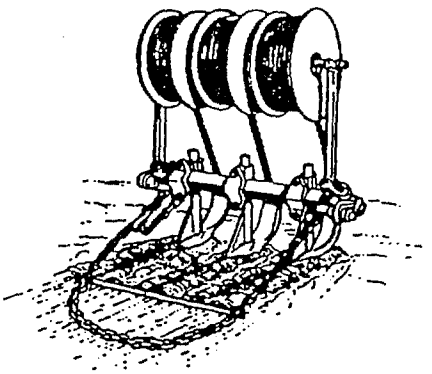

Figure 3.17. Leveling Bed Behind Blades

7. At the end of the row allow 3 to 4 extra feet of drip tape before cutting. Leave end open for initial flushing.

8. When the drip roll comes near to the end, cut the drip tape between the reel and the blade, leaving the drip tape still threaded in the blade. Remove the empty roll and put on a new one. Join the drip tape from the new roll to the piece still threaded in the blade by butting the ends together and taping on either side with a piece of adhesive tape from the new roll (Figure 3.18). The drip tape from the new roll will automatically thread itself when the tractor is started again. It is a good plan to half bury the empty reel to identify the spot so that a proper splice can be made later.

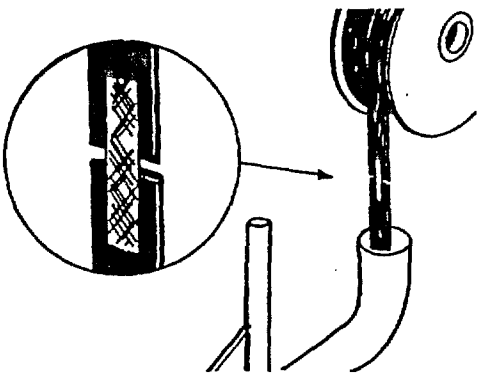

Figure 3.18. Threading Drip Tape from New Roll

COMBINED OPERATIONS

The burying of the drip tape can often be combined with other operations like seeding, planting, fumigating and laying film. (Figure 3.19) shows a three-row unit that fumigates the soil, lays the plastic mulch film and buries the drip tape in one operation. The fumigating tanks are on the front of the tractor. The rolls of drip tape, film mulch, and blades for burying the drip tape are at the rear of the tractor.

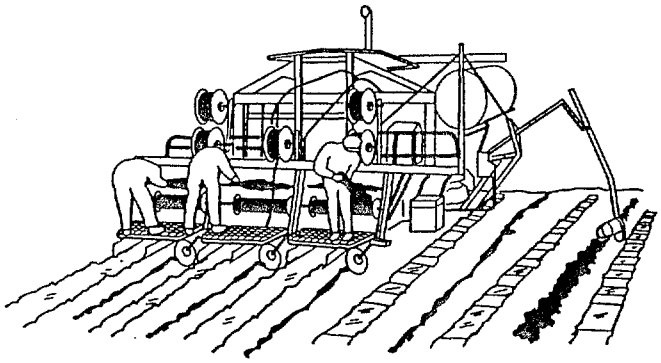

Figure 3.19. Fumigating, Laying Mulch Film and Burying Drip Tape on Pineapple

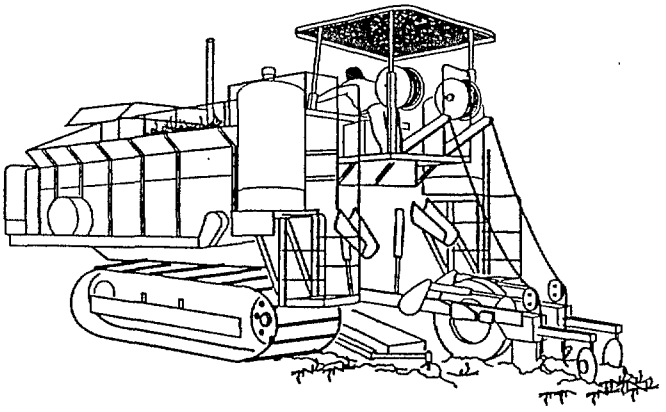

Figure 3.20. Planting, Fumigating and Burying Two Rows of Drip Tape on Pineapple

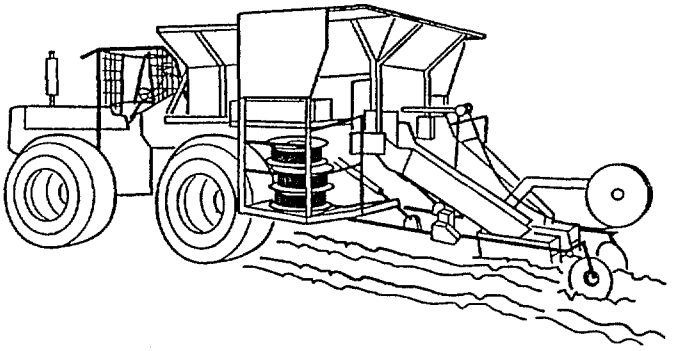

Figure 3.21. Seed Planting Two Rows of Cane with Tape Injected in the Middle

MECHANICAL SURFACE INSTALLATION OF DRIP TAPE

INSTALLATION AND SUBSEQUENT FIELD OPERATIONS

Care must be taken to avoid damage to the drip tape during subsequent field operations. If plants or stakes are to be located close to the drip tape, it is critical that the tape be accurately located and either placed in a shallow trench or covered slightly. This will prevent movement of the tape caused by expansion from heat and cold. When planting and staking are being done, by knowing the precise location of the tape and using reasonable care, damage to a row or an entire field of drip tape can be avoided.

1. Drip tape on the surface should be placed on the windward side of the row.
2. Drip tape on the surface should be placed close to the plant row with the outlets pointed up (see Figure 3.5).
3. The drip tape can be mounted on a low stand at the end of the row as shown in Figure 3.22. A stick tied to the end of the drip tape makes it easy to pull the drip tape and still hold it close to the ground so that wind doesn't blow it away during installation. Make sure that the drip tape does not rub on any sharp objects during installation.

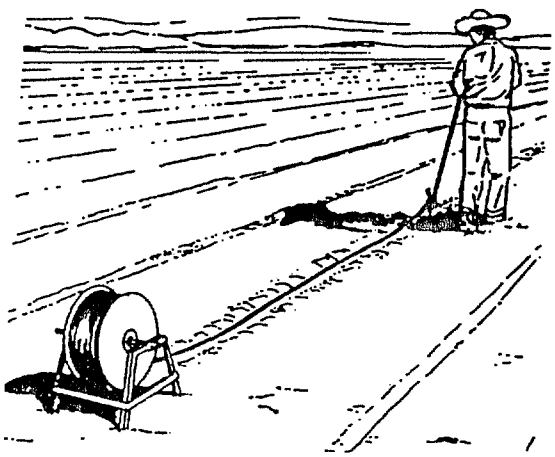

Figure 3.22. Stand for Reeling Out Drip Tape

4. Surface installations often need some type of anchoring such as a 6" wire staple or a shovel of soil on top of the drip tape every 20 feet or so (Figure 3.23).

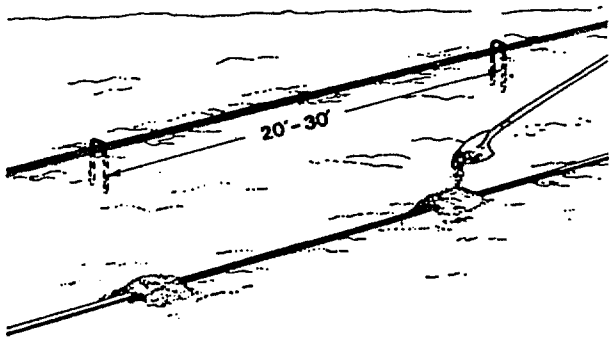

Figure 3.23. Wire Holders or Soil to Anchor Drip Tape in Place

5. Drip tape can also be installed on the surface with a tractor in much the same way that drip tape is buried except that a guide close to the surface is substituted for the blade.
6. Extra length should be left at both ends of the row to allow for contraction and for connections.
7. The end of each drip tape should be left open until after the flushing operation, the same as with buried drip tape.
8. Surface drip tape should be held at both ends. A wire end holder (Figure 3.24) is a convenient method to secure surface installed drip tape at both ends of the row. At the same time, it acts as a simple method of closing off the ends.

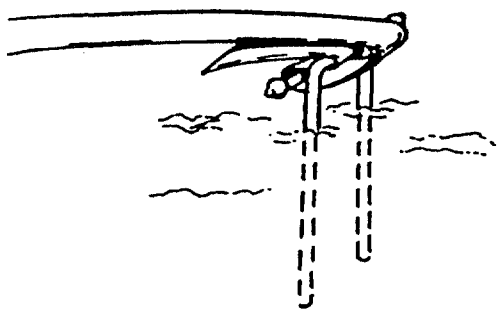

Figure 3.24. Wire End Holder

GREENHOUSE/NURSERY APPLICATIONS

Chapin Turbulent Twin-Wall drip tape has been successfully used over containers or on top of the ground for field flowers or other nursery crops. Figures 3.25, 3.26 and 3.27 show 24" spacing drip tape over pots in a poinsettia greenhouse. Figure 3.25 shows the drip tape connection from a 2" PVC submain using a threaded adapter. Figure 3.26 shows the drip tape stretched over the pots on 24" spacing with end closings made to an affixed heavy gauge wire stretched between vertical rebar posts driven into the ground. At the end of each row, the drip tape has been closed (Figure 3.27) by using tie tape securely tied over a multiple folded drip tape end wrapped around the wire termination.

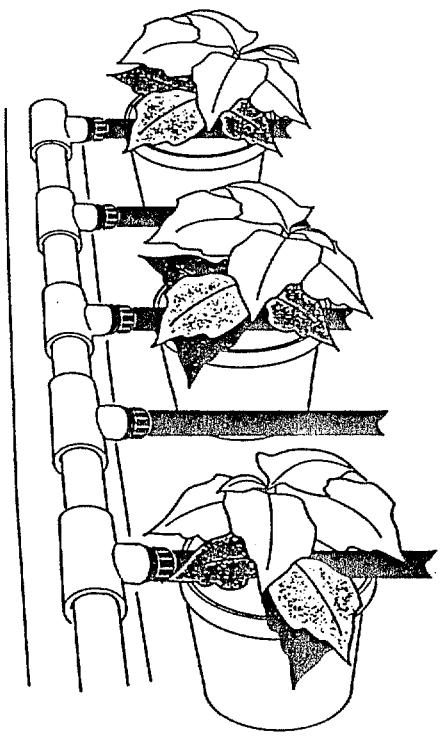

Figure 3.25. Submain to Drip Tape Connection

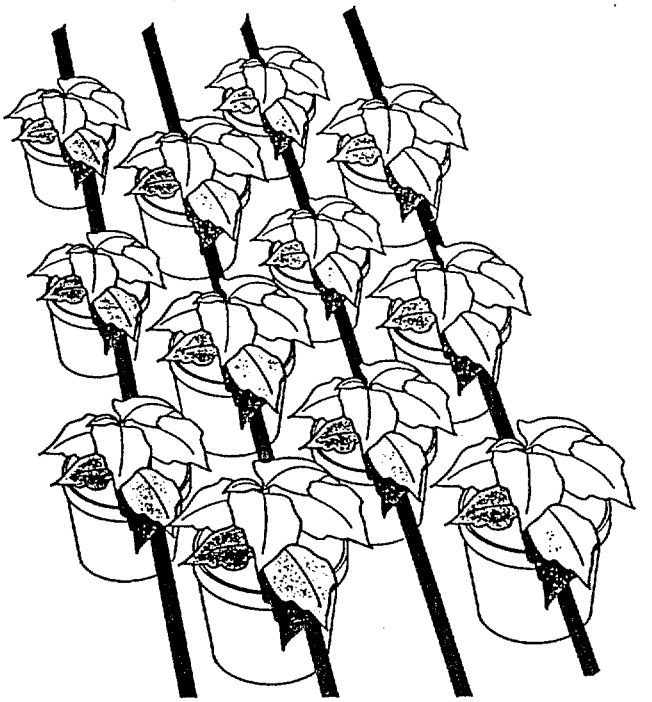

Figure 3.26. Drip Tape Stretched over Poinsettia Pots

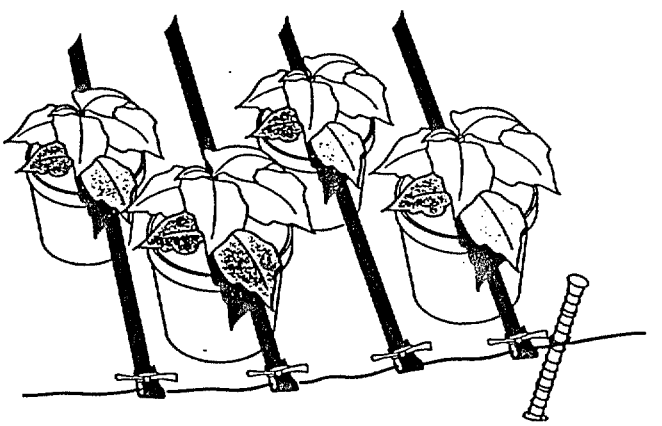

Figure 3.27. Drip Tape Ends Closed Using Tie Tape

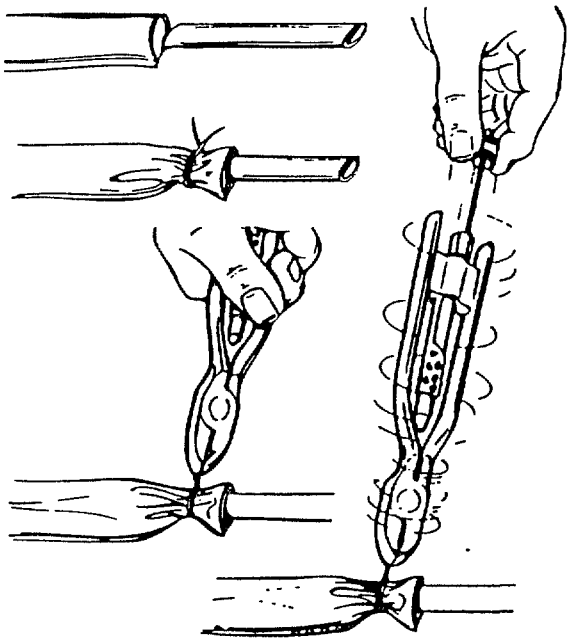

Figure 3.28. Splicing with Wire and Rapid Twist Pliers

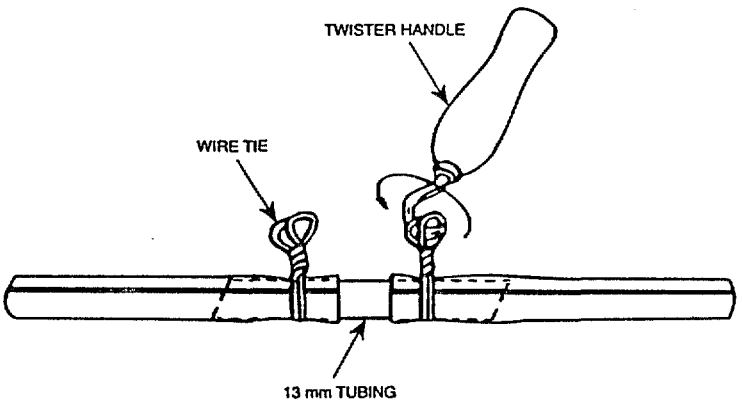

Figure 3.29. Splicing with Wire Ties

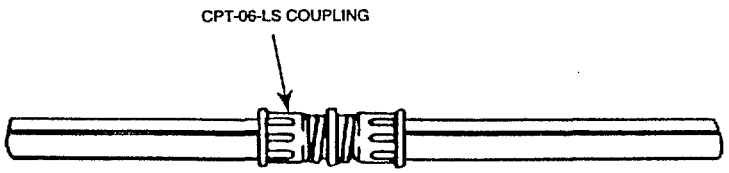

Figure 3.30. Splicing with Coupling

END CLOSING METHODS

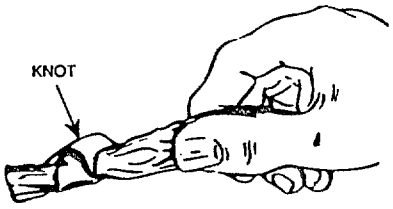

Figure 3.31. Knot Method (occasionally used but not recommended)

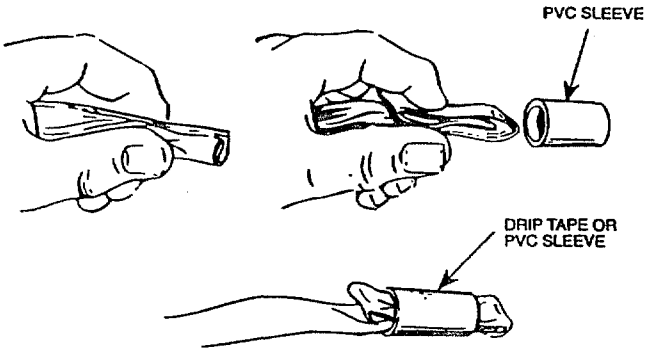

Figure 3.32. Sleeve for Closing End of Drip Tape

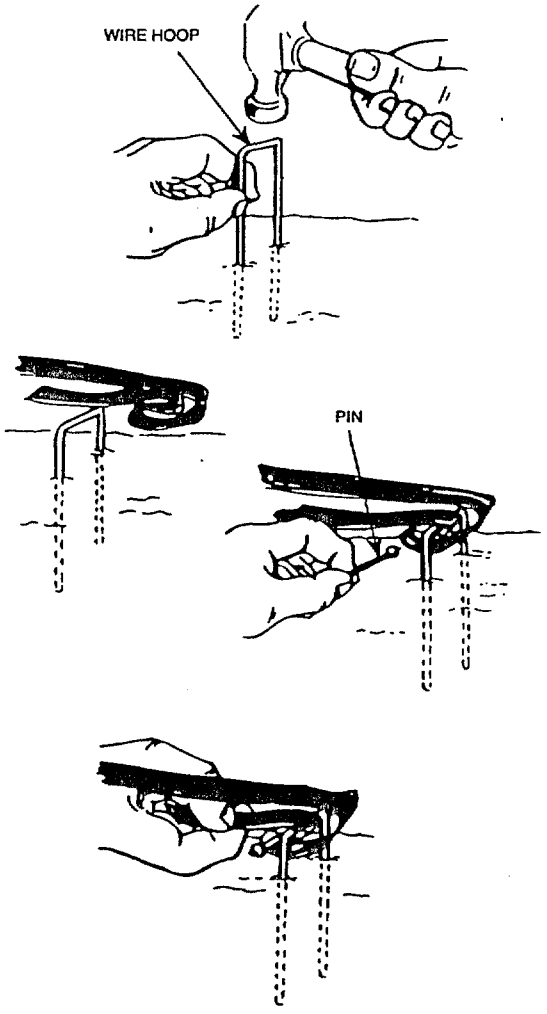

Figure 3.33. End Holder Method When Used Above Ground

SUBMAIN TO DRIP TAPE CONNECTIONS

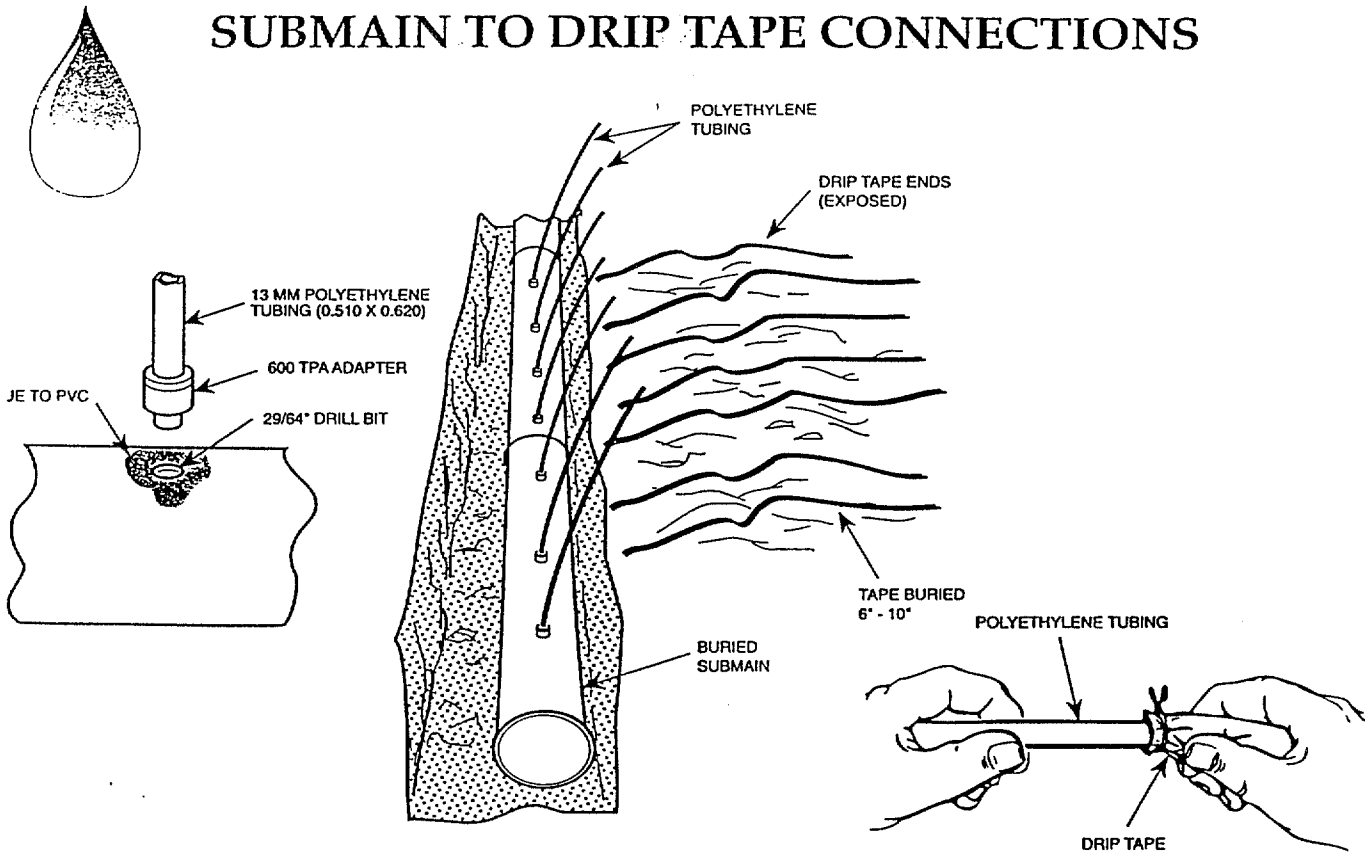

Figure 3.34. Polyethylene (PVC) Submain to Deep Buried Hose

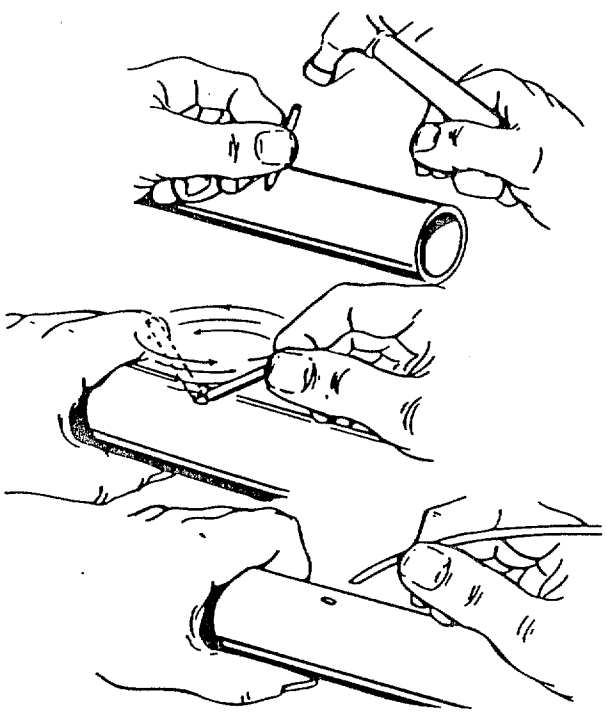

Figure 3.35. Punching Polyethylene Pipe and Inserting Supply Tube

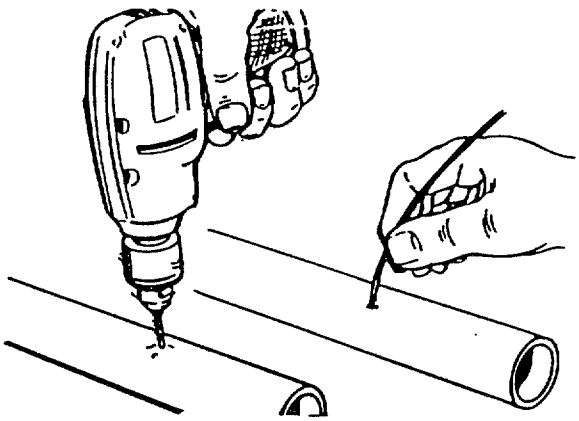

Figure 3.36. Drilling PVC Pipe and Inserting Supply Tube

SUPPLY (SPAGHETTI) TUBE SIZES	DRILL SIZE
#2	1/8 (.125)
#2.5	#18 (.1695)
#3	#14 (.182)
#4	#3 (.213)
#4.5, #5	F (.257)

Figure 3.37. Supply Tube Drill Size

SUBMAIN TO DRIP TAPE CONNECTIONS (cont)

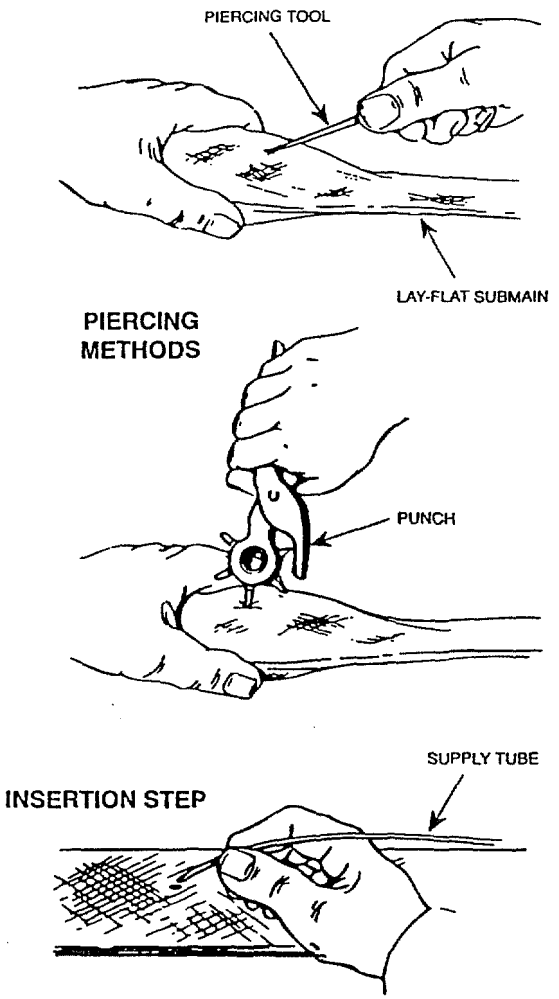

Figure 3.38. Piercing Lay-Flat Hose (PVC Discharge Hose) to Insert Supply Tube

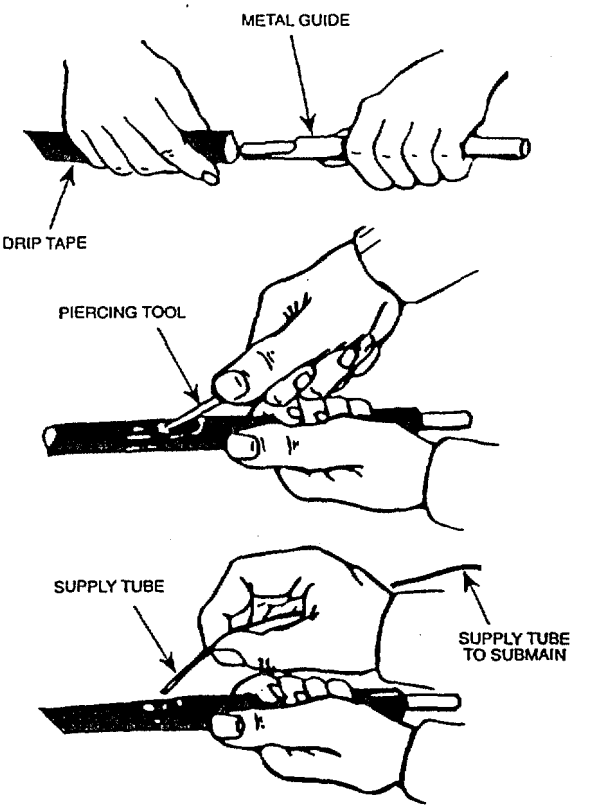

Figure 3.39. Piercing Tool and Guide

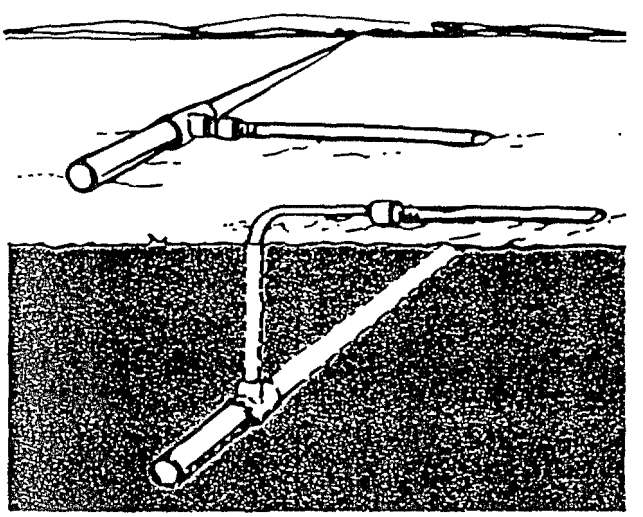

Figure 3.40. Direct Connections

REMOVAL OF DRIP TAPE

As a general rule, lower mil thickness drip tape is used for single or short season crops. At the end of that season, the field is reworked and prepared for another planting and it is usually not economically or physically possible to remove and/or reuse drip tape. Lower mil tape also have a tendency to break, tear or puncture during the removal process, making repair and reinstallation uneconomical. The relatively low cost of new tape compared to the generally high value of a short season crop (for example, berries, peppers, melons) usually convince growers to start with new tape for the next crop.

There are 3 basic reasons to remove old drip tape and replace it with new tape:

1. Ease of installation of new tape
2. Cost of repair and relaying old tape is greater than the cost of installing new tape
3. Reliability of new product is much higher

A drip tape puller or remover which spools 3 rows (36" spacing) at a time is shown in Figure 3.41. Recycling or proper disposal of removed product is recommended.

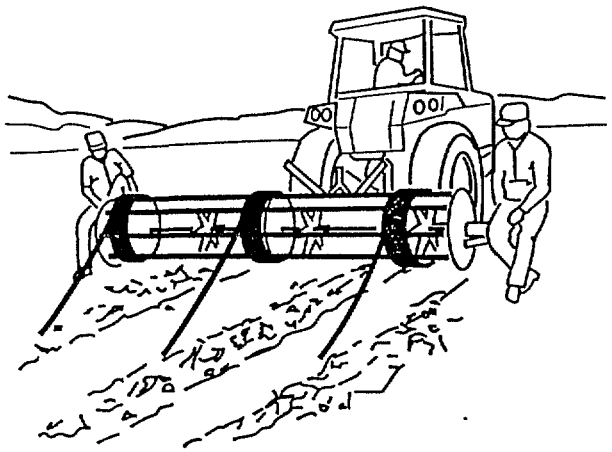

Figure 3.41. Drip Tape Remover
(Tape will be disposed)

Higher mil thickness drip tape which is used for multiple cropping may be left in place for several seasons. When it is removed, if the wetting pattern and performance has been good, then careful removal and reuse is encouraged.

GUIDELINES FOR TROUBLE-FREE OPERATION

CLOGGING OR PLUGGING

The biggest single problem facing the users of drip tape is the clogging or plugging of outlets by particles of mineral or organic matter. These particulates can reduce flow rates, cause nonuniformity in wetting patterns and, finally, result in plant stress or losses. The substances causing plugging may include the following:

1. Soil particles
2. Living or dead organic materials
3. Insects
4. Teflon tape
5. PVC pipe shavings

Many problems and possible solutions relating to Items 1 and 2 will be dealt with in the Troubleshooting Guidelines below. However, preventive maintenance can help prevent plugging of all of the above. These steps include regular flushing of submain and lateral lines. Most settled sediments can be flushed from a system with a flow velocity of one foot per second (also referred to as the "scour velocity"). In standard half-inch lines, the 1 ft/sec scour velocity is equivalent to a flow rate of 1 G.P.M. at the downstream exit end. Submains and laterals should be manually flushed several times during the season. This process should include opening the ends of the drip tape to allow the water to run until it is clear. A water test should be made at this time to examine any impurities in the water. By collecting water in a glass container, an observation should be made to determine whether bacterial slime, particulate matter or perhaps iron precipitation is present. If the water is contaminated, a sample should be placed in two small jars or test tubes. Treat one with chlorine bleach and the other with a few drops of hydrochloric acid and note the changes.

The following troubleshooting guidelines are designed to help analyze potential problems and suggest possible solutions.

It is always <u>critical</u> to:

1) Analyze your water supply on a regular, periodic basis to help forecast potential problems and
2) Seek the professional advice of an irrigation designer or engineer before implementing "fixes" to perceived problems.

PROBLEM	DESCRIPTION	POSSIBLE SOLUTION(S)
Dirt plugging in the turbulent channel	Sucking dirt into drip tape when water is shut off. As water drains after shut-off, a vacuum is formed.	Install air relief valve(s)
Root intrusion in buried tape	Will occur when a plant is starved for water. Hairline roots will seek water and enter turbulent channel.	Increase hours of water per day
Dirt in buried tape	Evidence of dirt throughout supply hose, inlet, outlet, turbulent channel	Adequate filtration
Ant/insect damage to drip tape wall	Small pin holes chewed in sides of drip tape and/or enlargement of outlet orifice. NOTE: Most likely to occur with 15 mil or less drip tape	Spray and/or injection of appropriate insecticides; release of beneficials
Animal damage	Teeth marks, punctures	Bury tape; use of animal pest control measures
Mechanical damage during installation	Punctures, tears, scratch marks	Inspect installation blades frequently (see pg 3-7)
Clogging due to foreign materials after the filter system	Accumulation in mains and submains from prior season; breakage of lines	Flushing mains, submains before connecting drip tape; use of acid to clean system; check for line breakage (see pg 4-1)

WATER QUALITY - DEGREE OF PROBLEM

PRECIPITATES	NONE	INCREASING	SEVERE	POSSIBLE SOLUTIONS
Iron (ppm)	0.0 - 0.1	0.1 - 0.4	0.4 +	Use acid in proper solution to dissolve
Manganese (ppm)	0.0 - 0.2	0.2 - 0.4	0.4 +	Use acid in proper solution to dissolve
Sulfides (ppm)	0.0 - 0.1	0.1 - 0.2	0.2 +	Use acid in proper solution to dissolve
Calcium Carbonate (ppm)	No levels established			Use acid in proper solution to dissolve
Organic material (living or dead)	Slime, colored, odiferous			Use chlorine in proper solution to decompose

Figure 4.1. Troubleshooting Guidelines

CONVERSION TABLE

TO CONVERT	INTO	MULTIPLY BY
acres	hectares	0.4047
acres	sq feet	43,560.0
acres	sq meters	4,047.0
acres	sq miles	1.562×10^{-3}
acres	sq yards	4,840.0
acre-feet	cu feet	43,560.0
acre-feet	gallons	3.259×10^{5}
BTU	kilowatt-hrs	2.928×10^{-4}
Centigrade	Fahrenheit	(°C x 1.8) + 32
centimeters	feet	3.281×10^{-2}
centimeters	inches	0.3937
centimeters	millimeters	10.0
cubic centimeters	cu inches	0.06102
cubic centimeters	gallons (U.S.)	2.642×10^{-4}
cubic centimeters	liters	0.001
cubic centimeters	pints (U.S.)	2.113×10^{-3}
cubic centimeters	quarts (U.S.)	1.057×10^{-3}
cubic feet	cu cm	28,320.0
cubic feet	cu inches	1,728.0
cubic feet	cu meters	0.02832
cubic feet	cu yards	0.03704
cubic feet	gallons (U.S.)	7.48052
cubic feet	liters	28.32
cubic feet	pints (U.S.)	59.84
cubic feet	quarts (U.S.)	29.92
cubic feet/sec	million gals/day	0.646317
cubic feet/sec	gallons/min	448.831
cubic inches	cu cm	16.39
cubic inches	gallons	4.329×10^{-3}
cubic inches	liters	0.01639
cubic meters	cu yards	1.308
cubic meters	gallons (U.S.)	264.2
cubic meters	liters	1,000.0
feet	centimeters	30.48
feet	kilometers	3.048×10^{-4}
feet	meters	0.3048
feet of water	kg/sq meter	304.8
feet of water	pounds/sq in.	0.4335
gallons	cu cm	3,785.0
gallons	cu feet	0.1337
gallons	cu inches	231.0
gallons	cu meters	3.785×10^{-3}
gallons	cu yards	4.951×10^{-3}
gallons	liters	3.785
gallons (Imp.)	gallons (U.S.)	1.20095
gallons (U.S.)	gallons (Imp.)	0.83267
gallons of water	pounds of water	8.3453
gallons/min	cu ft/sec	2.228×10^{-3}
gallons/min	liters/sec	0.06308
gallons/min	cu ft/hr	8.0208
hectares	acres	2.471
hectares	sq feet	1.076×10^{5}

CONVERSION TABLE (cont)

TO CONVERT	INTO	MULTIPLY BY
kilograms/sq meter	in. of mercury	2.896×10^{-3}
kilograms/sq meter	pounds/sq ft	0.2048
kilograms/sq meter	pounds/sq in.	1.422×10^{-3}
kilometers	feet	3,281.0
kilometers	meters	1,000.0
kilometers	miles	0.6214
kilometers	yards	1,094.0
kilometers/hr	feet/min	54.68
kilometers/hr	feet/sec	0.9113
kiloPascals (kPa)	pounds/sq in.	0.14503
kilowatts	BTU/min	56.92
kilowatts	horsepower	1.341
kilowatt-hrs	BTU	3,413.0
kilowatt-hrs	horsepower-hrs	1.341
liters	cu cm	1,000.0
liters	cu feet	0.03501
liters	cu inches	61.02
liters	cu meters	0.001
liters	cu yards	1.308×10^{-3}
liters	gallons (U.S.)	0.2642
liters	pints (U.S.)	2.113
liters	quarts (U.S.)	1.057
liters/min	cu ft/sec	5.886×10^{-4}
liters/min	gals/sec	4.403×10^{-3}
liters/sec	gallons/min	15.852
liters/sec-sq meter	gallons/min-sq ft	1.4726
meters	centimeters	100.0
meters	feet	3.281
meters	inches	39.37
meters	kilometers	0.001
meters	miles(naut.)	5.396×10^{4}
meters	miles (stat.)	6.214×10^{4}
meters	millimeters	1,000.0
meters	yards	1.094
meters/min	miles/hr	0.03728
meters/sec	feet/min	196.8
meters/sec	feet/sec	3.281
meters/sec	kilometers/hr	3.6
meters/sec	kilometers/min	0.06
meters/sec	miles/hr	2.237
meters/sec	miles/min	0.03728
miles (statute)	feet	5,280.0
miles (statute)	inches	6.336×10^{4}
miles (statute)	kilometers	1.609
miles (statute)	meters	1,609.0
miles/hr	cm/sec	44.70
miles/hr	feet/min	88.0
miles/hr	feet/sec	1.467
milligrams/liter	parts/million	1.0
milliliters	liters	0.001
millimeters	centimeters	0.1
millimeters	inches	0.03937
millimeters	mils	39.37

CONVERSION TABLE (cont)

TO CONVERT	INTO	MULTIPLY BY
million gals/day	cu ft/sec	1.54723
mils	centimeters	2.540×10^{-3}
mils	centimeters	2.540×10^{-3}
mils	inches	0.001
parts/million	pounds/million gal	8.345
pounds	grams	453.5924
pounds	kilograms	0.4536
pounds	ounces	16.0
pounds of water	gallons	0.1198
pounds/cu ft	grams/cu cm	0.01602
pounds/cu ft	kg/cu meter	16.02
pounds/sq in.	atmospheres	0.06804
pounds/sq in.	bars	0.0689
pounds/sq in.	ft of water	2.307
pounds/sq in.	in. of mercury	2.036
pounds/sq in.	kg/sq meter	703.1
pounds/sq in.	pounds/sq ft	144.0
quarts(liq.)	liters	0.9463
square miles	acres	640.0
square meters	square feet	10.7639
square meters	square inches	1550.0
tonnes (metric)	kilograms	1,000.0
tonnes (metric)	pounds	2,205.0
tons (short)	kilograms	907.1848
tons (short)	pounds	2,000.0
tons (short)	tonnes (metric)	0.9078
yards	meters	0.9144

SUPPLY TUBE CONVERSION CHART

SIZE O.D. X I.D. (TUBE #)	TYPICAL ROLL SIZE FEET	TUBE
.125 x .076 (#2)	2500	A
.176 x .105 (#2.5)	2500	B
.187 x .125 (#3)	2000	C
.225 x .155 (#4)	1000	D
.250 x .170 (std 1/4" tubing)	1000	E
.272 x .188 (#4.5)	1000	F
.275 x .210 (#5)	1000	G
.350 x .250 (#6)	500	H

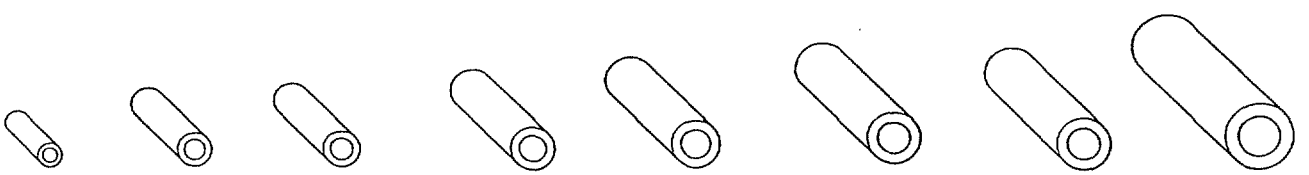

A B C D E F G H

FRICTION LOSS FOR LAY-FLAT HOSE*

(IN PSI PER 100 FT OF HOSE (C - 140))

GPM \ Size	0.50	0.63	0.75	1.00	1.25	1.50
1	1.41	0.48	0.20	0.05	0.02	0.01
2	5.09	1.72	0.71	0.18	0.06	0.02
3	10.77	3.64	1.50	0.37	0.13	0.05
4	18.34	6.19	2.55	0.63	0.21	0.09
5		9.36	3.85	0.95	0.32	0.13
6	2.00	13.11	5.40	1.33	0.45	0.19
7		17.44	7.18	1.77	0.60	0.15
8	0.08		9.19	2.27	O. M	0.32
9	0.10		11.43	2.82	0.95	0.39
10	0.12		13.89	3.43	1.16	0.48
11	0.14		16.57	4.09	1.38	0.57
12	0.17		19.47	4.80	1.62	0.67
13	0.19			5.57	1.88	0.77
14	0.22			6.39	2.16	0.89
15	0.25			7.26	2.45	1.01
16	0.28			8.18	2.76	1.14
17	0.31			9.15	3.09	1.27
18	0.35	2.50		10.15	3.43	1.41
19	0.39			11.24	3.79	1.56
20	0.42	0.14		12.35	4.17	1.72
22	0.51	0.17		14.74	4.98	2.05
24	0.59	0.20		17.31	5.85	2.41
26	0.69	0.23			6.78	2.79
28	0.79	0.27			7. M	3.20
30	0.90	0.30			8.83	3.64
32	1.01	0.34			9.95	4.10
34	1.13	0.38			11.13	4.59
36	1.26	0.43	3.00		12.38	5.10
38	1.39	0.47			13.68	5.63
40	1.53	0.52	0.21		15.04	6.19
42	1.67	0.57	0.23		16.46	6.78
44	1.82	0.62	0.25		17.94	7.39
46	1.98	0.67	0.28		19.48	8.02
48	2.14	0.72	0.30			8.68
50	2.31	0.78	0.32			9.36
52	2.48	0.84	0.35			10.06
54	2.66	0.90	0.37			10.79
56	2.85	0.96	0.40			11.54
58	3.04	1.03	0.42			12.32
60	3.23	1.09	0.45			13.11
62	3.44	1.16	0.48			13.93
64	3.65	1.23	0.51			14.78
66	3.86	1.30	0.54			15.64
68	4.08	1.38	0.57			16.53
70	4.30	1.45	0.60			17.44
75	4.89	1.65	0.68			19.82
80	5.51	1.86	0.77			
85	6.16	2.08	0.86			
90	6.85	2.31	0.95			
95	7.57	2.56	1.05			
100	8.32	2.81	1.16			

* PVC Discharge Hose

FRICTION LOSS FOR LAY-FLAT HOSE* (cont)

(IN PSI PER 100 FT OF HOSE (C - 140))

	Size	4.00	6.00	8.00
GPM	60	0.11	–	–
	70	0.15	–	–
	80	0.19	–	–
	90	0.23	–	–
	100	0.28	–	–
	125	0.43	–	–
	150	0.60	–	–
	175	0.79	–	–
	200	1.02	–	–
	225	1.26	–	–
	250	1.53	–	–
	275	1.83	–	–
	300	2.19	0.30	–
	325	2.48	0.35	–
	350	2.86	0.40	–
	375	3.24	0.45	–
	400	3.66	0.51	–
	450	4.55	0.64	–
	500	5.53	0.77	0.19
	600	7.74	1.08	0.27
	700	10.3	1.49	0.35
	800	13.2	1.89	0.45
	900	16.4	2.29	0.56
	1000	19.9	2.78	0.69
	1100	23.8	3.32	0.72
	1200	27.9	3.9	0.96
	1300	32.4	4.52	1.11
	1400	37.2	5.18	1.28
	1500	42.1	5.89	1.45
	1600	47.5	6.63	1.63
	1800	59.0	8.26	2.03
	2000	71.9	10.02	2.47

* PVC Discharge Hose

GREENHOUSES MATCHED TO YOUR REQUIREMENTS

Rough Brothers - An Industry Leader for 60+ Years

Rough solves the most demanding greenhouse engineering problems

For more than 60 years, Rough Brothers Inc. has designed, manufactured and built high-quality greenhouses of every type. For steel or aluminum construction with glass, acrylic, polycarbonate or poly glazing, we have the experience and resources to get your greenhouse project done on time and on budget.

Employing the latest technology, Rough engineers have built structures for such diverse clients as: Ciba Geigy Corporation, Harvard University, Pioneer Seed Company, BASF Experimental Laboratories, Monsanto Corporation, Ohio State University and scores of other top corporate and commercial clients.

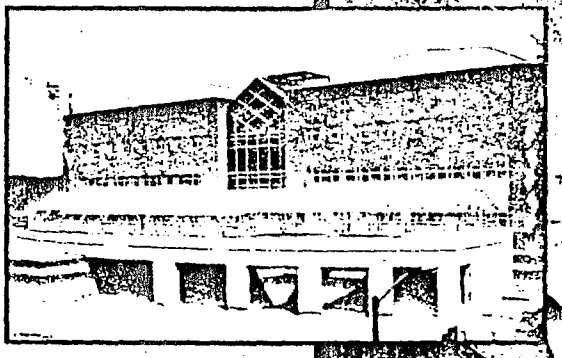

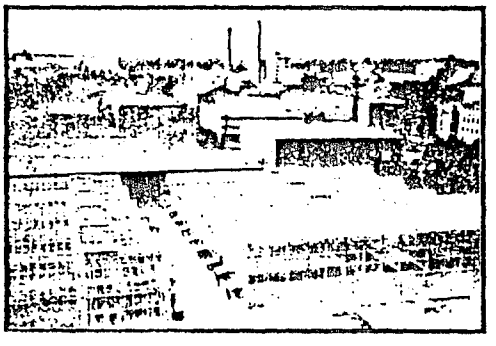

Rough construction crews maintain a tradition of excellence

The supervisors of our large construction force have more than 150 years' combined experience in greenhouse construction and renovation.

Rough Brothers also has extensive experience in the restoration and renovation of conservatories and arboreta, applying disciplines ranging from structural engineering to metallurgy.

ROUGH BROTHERS INC.

BEST AVAILABLE COPY

Rough stocks an inventory of high-performance greenhouses

In addition to custom engineered greenhouse projects, Rough provides you with a wide choice of pre-engineered structures.

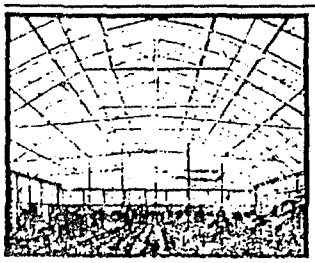

WHITEHOUSE™

A bright, high-tech breakthrough in greenhouse environments
A white, reflective structure and high light transmission glazing create an amazingly bright interior that bathes cash crops in even waves of radiant energy.

- Unique split constant radius truss design keeps sunlight inside the greenhouse for more hours every day
- UV-stable, 48-inch wide, 8mm double-walled Exolite® glazing panels; galvanized structural steel components electrostatically applied with a white coating for maximum reflectivity
- Maximum light transmission and energy retention

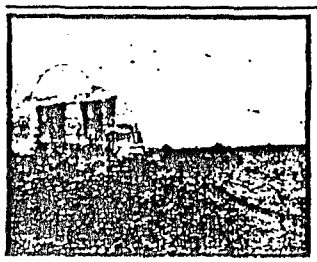

VENTURION

A full line of affordable poly arch houses

- The Venturion 20'6" house with or without Roof Vent
- The Venturion II 24' double hoop house
- The Venturion PLUS 20'6" house with Energy Beam
- The McWall - maximizes growing space at minimal cost
- Optional Roof Vent

Venturion Poly Arch system greenhouses are built to last:

- Strong, durable galvanized steel superstructure
- Aluminum "Snap-Lock" holddowns for easy film replacement
- U.V.-inhibited poly film for maximum light transmission and minimal ultraviolet degradation

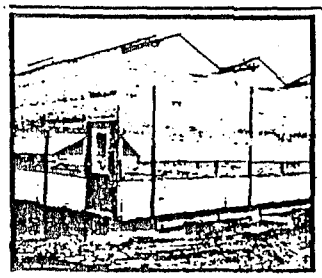

THE INTERNATIONAL

The International combines American-built quality with Venlo-style economy

- High light transmission
- Lower square-foot cost

using an economical Venlo-style glazing system with American manufacturing experience and glazing materials

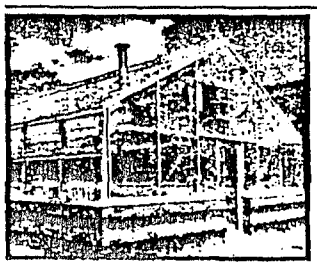

TECHLITE®

Clear Span Aluminum Truss Greenhouse with Double-Skinned Insulated Glazing System
The Techlite system offers reduced construction costs now—and lower heating, lighting and cooling costs in the future.

Plus:

- Double-skinned glazing for maximum light penetration and thermal insulation
- Complete, extra-strong glazing system
- Thermal insulation comparable to insulated glass, excellent structural strength and rigidity
- Natural ventilation options available
- Low-maintenance 47-1/4" wide Exolite® acrylic or polycarbonate panels and high-strength aluminum alloy glazing bars

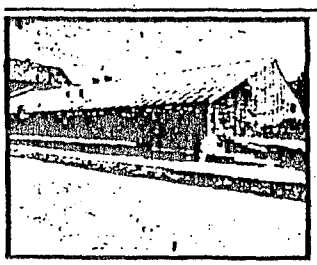

HARVEST HOUSE

Clear-Span Aluminum Truss Greenhouse with glass glazing
Harvest House aluminum greenhouses provide maximum environmentally controlled space at a minimum cost:

- Available in either free-standing or gutter-connected combinations
- Affordable materials & finishes: 24-inch wide, double-strength glass and high-strength aluminum alloy glazing bars

Both Techlite and Harvest House are designed for professional growing environments: vocational training programs, colleges, universities, industrial research laboratories, retail garden and floral centers, and commercial growers.

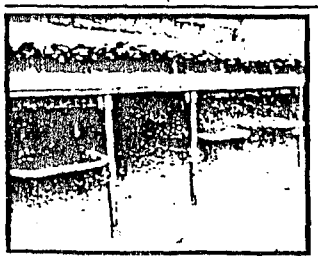

BENCHES & HEATING

Complete your profitable growing environment with Rough stationery and Ro-Flo benching, Ebb & Flo benching, and heating systems including Alcoa aluminum fin under-bench heating.

ROUGH BROTHERS INC.

ROUGH BROTHERS INC.
5513 Vine Street,
Cincinnati, OH 45217 USA
Telephone: International Access Code + 1-513-242-0310
Facsimile: International Access Code + 1-513-242-0816

© 1993 Rough Brothers Inc.

APPENDIX C

FLORICULTURE CROPS:
CHEMICAL USE BOOKLET
A GUIDE FOR INSECTICIDE, MITICIDE, FUNGICIDE, GROWTH REGULATOR, AND HERBICIDE APPLICATION

January, 1991

Dear Industry Colleague:

The Ohio Florists' Association (OFA) is proud to offer you the 1991-92 edition of *Floriculture Crops: Chemical Use Booklet.* It presents the latest information on the use of insecticides, miticides, fungicides, growth regulators, herbicides, and algaecides for greenhouse crops in an easy-to-understand format. This booklet has been sent to every dues-paying member of OFA.

We have offered the floriculture industry outstanding educational resources like this booklet since our incorporation in April, 1931, and today remain one of the most active and successful floriculture associations anywhere. That's because we remain focused on our only goal—communicating quality educational information.

For example, our monthly, no-nonsense Bulletin. Consistent, up-to-date, applicable, hands-on information; the kind floriculture business people use to increase profits, efficiency, and product quality. Counted among contributing Bulletin authors are industry and university specialists from around the world. It is mailed monthly to every OFA member and is but one of the valuable membership benefits. As good as it is, the Bulletin is just the beginning of what we can offer you.

Our flagship educational event is the International Floriculture Industry Short Course, previously known as the Ohio Florist Short Course. The 1991 version will have 6,000 attendees from over 20 countries, 135 seminars, a 680-booth "grower" trade show, 90-booth "retail" trade show, and a new varieties exhibit with entries from around the world. It is the finest educational event of its kind; an extraordinary professional and personal experience.

We sponsor many other exciting programs throughout the year, and serve all facets of the floriculture industry: growers, retailers, garden center operators, interior plantscapers, manufacturers, suppliers, educators, and students. There's something of value for everyone in the industry in the OFA.

Other membership benefits include reduced fees on special publications and seminar workshop registrations, health care and life insurance options, and debt collection and tax consulting services, to name but a few.

If you are not already a member of the OFA, please take a moment to review the membership information on the following page. Additional information on other OFA services and publications can be found at the end of this booklet. If the information and order form have already been removed, contact us at:

2130 Stella Court, Suite 200
Columbus, OH 43215-1033 USA
Phone (614) 487-1117
FAX (614) 487-1216

The Ohio Florists' Association is looking forward to an outstanding year. We hope you will take part in some of the excellent educational opportunities we will be offering.

Harry K. Tayama

Harry K. Tayama
Executive Director

TABLE OF CONTENTS

Contributors 3

Insect And Mite Management Chart 4

Use Rates For Insecticides And Miticides Registered On Floriculture Crops 12

Insecticides And Miticides Registered For Management Of Insects And Mites On Certain Greenhouse Floral Crops 14

Disease Management Chart 16

Use Rates For Several Fungicides Registered On Floriculture Crops 28

Fungicides, Bactericides, And Nematicides Registered For Management Of Fungi, Bacteria, And Nematodes On Certain Floral Crops 31

Growth Regulator Chart 33

How To Use The Chemical Growth Regulator Chart 38

Growth Regulator Tables 39

Guidelines For Trial Use Of Silver Thiosulfate Sprays To Reduce Seed Geranium Petal Shattering And Holiday Cactus Flower Drop 42

Growth Regulator Shelf Life 43

Weed Control Chart 45

Algae Control Chart 46

Pesticide Application Techniques For Disease And Insect Management 47

Avoid Mistakes By Using Pesticide Use Reports 51

A Nomograph For Calibrating Hand-Held Sprayers 52

27 Basic Tips For Increasing Pesticide Efficiency On Greenhouse Crops 54

Integrated Insect And Mite Management Programs On Floral And Foliage Crops 55

Disinfestants Or Sanitizers And Their Uses In Greenhouses 58

Conversion List And "Rules-Of-Thumb" For Fungicide Application 59

Measuring Small Volumes Of Wettable Powder Fungicides 59

Dilution Tables—A Guide To Accurate Measures 59

Telephone Numbers To Call In Case Of Pesticide Spills, Fires, Accidents, Or Other Emergency Conditions 60

Printed by the Ohio Florists' Association, 2130 Stella Court, Suite 200, Columbus, OH 43215-1033 USA, through the sponsorship of Florists' Mutual Insurance Company, 500 St. Louis Street, Edwardsville, IL 62025. ©Copyright Ohio Florists' Association 1991. Permission is hereby given to reprint articles appearing in this bulletin provided the following reference statement appears with the reprinted article: "Reprinted from the Ohio Florists' Association Bulletin, Number 735, January 1991."

193

Ohio Florists' Association Bulletin
2130 Stella Court, Suite 200, Columbus, OH 43215-1033 USA • (614) 487-1117 • FAX: (614) 487-1216
Number 735 Harry K. Tayama, *Editor*, Teresa J. Roll, *Associate Editor* January, 1991

Floriculture Crops: Chemical Use Booklet

A Guide For Insecticide, Miticide, Fungicide, Growth Regulator, and Herbicide Application

Printing Of This Booklet Was Sponsored By:

FLORISTS' MUTUAL INSURANCE COMPANY

Founded—1887

GROWING WITH YOU FOR MORE THAN A CENTURY

500 St. Louis Street
Edwardsville, Illinois 62025

(800) 851-7740
FAX (800) 233-3642

FOR ALL YOUR INSURANCE NEEDS

- PROPERTY
- LIABILITY
- WORKERS' COMPENSATION
- AUTOMOBILE
- LIFE/IRAs

194

MEMBERSHIP AND INFORMATION REQUEST FORM

PLEASE PRINT OR TYPE

Name_____ Company_____

Mailing Address_____ City_____

State_____ Zip Code_____ Country_____ Business Phone_____ FAX_____

☐ **YES! Start my membership in the Ohio Florists' Association immediately. I have enclosed the appropriate dues and checked my category(s) below. I understand with my paid dues I receive the *Floriculture Crops: Chemical Use Booklet* absolutely free.**

MEMBERSHIP CATEGORY(S):

☐ Allied Trade ☐ Garden Center Grower: ☐ 1-25,000 sq ft ☐ 25,000-100,000 sq ft ☐ over 100,000 sq ft

☐ Interiorscape ☐ Manufacturing ☐ Nursery ☐ Retail ☐ Wholesale ☐ Other_____

☐ Associate; Active Member Affiliate:_____ ☐ Educator ☐ Student

☐ **I am undecided about an OFA membership at this time. However, I would like to learn more about OFA's activities. Please put me on your mailing list to receive information on the topics I have marked below.**

☐ 1991 International Floriculture Industry Short Course ☐ Garden Center Tours and Schools ☐ Grower Tours and Schools

☐ Interiorscape Workshops ☐ Retail Florist Workshops ☐ Special Publications from OFA ☐ _____

Signature_____

Ohio Florists' Association membership is divided into categories, with dues dependent upon type, size, and location of business. **Effective through June 30, 1991.**

MEMBERSHIP CATEGORIES	Ohio Business	Business Outside Ohio	Business Outside U.S.
ACTIVE:			
A. Members without greenhouses; including allied trade, garden center, manufacturing, nursery, retail, wholesale, etc.	$40.00	$40.00	$45.00
B. Members with greenhouse space of 1 to 25,000 sq ft	$40.00	$40.00	$45.00
C. Members with greenhouse space of 25,000 to 100,000 sq ft	$50.00	$65.00	$45.00
D. Members with greenhouse space of over 100,000 sq ft	$75.00	$95.00	$80.00
ASSOCIATE:			
A. Includes active member's employee, educator, and student. Unless designated by an active member as official representative, associates cannot vote or hold office within the Association.	$20.00	$20.00	$25.00

CONTRIBUTORS

Stephen A. Carver
Research Assistant
The Ohio State University
Department of Horticulture
2001 Fyffe Court
Columbus, OH 43210
(614) 292-3856

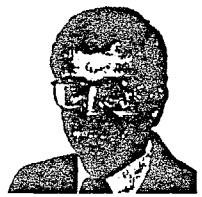

Richard K. Lindquist
Extension Entomologist
The Ohio State University
Ohio Agricultural Research
and Development Center
Department of Entomology
1680 Madison Avenue
Wooster, OH 44691
(216) 263-3736

John C. Peterson
Associate Professor
The Ohio State University
Department of Horticulture
2001 Fyffe Court
Columbus, Ohio 43210
(614) 292-3862

Charles C. Powell
Extension Pathologist
The Ohio State University
Department of Plant Pathology
2021 Coffey Road
Columbus, OH 43210
(614) 292-6397

Harry K. Tayama
Extension Floriculturist
The Ohio State University
Department of Horticulture
2001 Fyffe Court
Columbus, OH 43210
(614) 292-9784

This bulletin contains pesticide recommendations that are subject to change at any time. These recommendations are provided only as a guide. It is always the pesticide applicator's responsibility, by law, to read and follow all current label directions for the specific pesticide being used. No endorsement is intended for products mentioned, nor is criticism meant for products not mentioned. The authors and Ohio Florists' Association assume no liability resulting from the use of these recommendations.

196

OHIO FLORISTS' ASSOCIATION BULLETIN

INSECT AND MITE MANAGEMENT CHART*

Richard K. Lindquist, Extension Entomologist, Department of Entomology, The Ohio State University

INSECT OR MITE PEST	CHEMICAL MANAGEMENT			REGISTERED CROPS	COMMENTS
	COMMON NAME	BRAND NAME	FORMULATION		
Aphids	Acephate	Orthene	75SP	Rose, carnation, chrysanthemum, foliage plants, orchid, anthurium, cactus, poinsettia	Foliar spray. Injures some chrysanthemum cultivars and foliage plants.
		Pt 1300	Aerosol	Airplane, aloe, begonia, bird of paradise, bloodleaf, Boston fern, cactus, calendula, carnation, chicken-gizzard, Christmas cactus, chrysanthemum, coleus, columbine, croton, crown of thorns, cut-leaf philodendron, devil's ivy, dieffenbachia, dusty miller, euonymus, gardenia, geranium, German ivy, grapeleaf ivy, impatiens, jade plant, Moses in the cradle, nightblooming cereus, ornamental pepper, orchid, pansy, peperomia, peperomia (variegated), philodendron, poinsettia, polka-dot plant, sansevieria, santolina, schefflera, shrimp plant, snapdragon, spider plant, sprengeri asparagus, velvetleaf, wandering jew, white-edged Swedish ivy, zinnia	
	Bifenthrin	Talstar	10WP	All greenhouse ornamentals	Not effective against green peach aphid.
	Chlorpyrifos	Dursban	50WP	All greenhouse ornamentals	Be careful, might injure plants.
	Cyfluthrin	Tempo Decathlon	2EC 20WP	All greenhouse ornamentals	
	Diazinon	Diazinon	Fog	Carnation, chrysanthemum, rose	
		Pt 265 Knox Out	2FM	African violet, agapanthus, ageratum, aluminum plant, alyssum, arrowhead, azalea, begonia, bird's nest fern, Boston fern, bottlebrush, cactus, calendula, camellia, celosia jewel box, chrysanthemum, cockscomb, coleus, cotoneaster, crape myrtle, croton, daisy, dianthus, dogwood, escalonia, euonymus, flat topped sedum, floss flower, friendship plant, gardenia, gazania, geranium, gold-dust, honeysuckle, hydrangea, ilex, impatiens, ivy, jade plant (crassula), Japanese aralia, juniper, leucothoe, lilac, malus, maranta, marigold, nandia, oleander, orchid, osmanthus, pachysandra, periwinkle, petunia, photinia, pineapple guava, pittosporum, podocarpus, primrose, privet, pyracantha, raphiolepsis, rhododendron, rose, salvia, sansevieria, scarlet sage, snake plant, snapdragon, spider plant, star jasmine, strawflower, Tahitian bridal veil, velvet plant (gynura), verbena, virvia, wandering jew, wax plant, zinnia	
	Dichlorvos	Vapona	Fog, Smoke	All greenhouse ornamentals	Effective at cooler greenhouse temperatures.

*Before purchasing and using any pesticide, you must check all labels for registered use, rates and application frequency. Generic names have been used for all pesticides. When possible, check the discussion of individual materials for examples of trade names. This list is presented for information only. No endorsement is intended for products mentioned, nor is criticism meant for products not mentioned.

INSECT OR MITE PEST	CHEMICAL MANAGEMENT			REGISTERED CROPS	COMMENTS
	COMMON NAME	BRAND NAME	FORMULATION		
Aphids (continued)	Endosulfan	Thiodan	50WP, EC	All greenhouse ornamentals	Effective at warmer greenhouse temperatures.
	Fenpro-pathrin	Tame	2.4EC	Anthurium, bedding plants, chamomile, chrysanthemum, columbine, foliage plants, geranium, gladiolus, impatiens, liriope, lily, marigold, poinsettia, snapdragon	
	Fluvalinate	Mavrik	Smoke	All greenhouse ornamentals	
	Horticul-tural Oil	Sunspray		Azalea, begonia, camellia, chrysanthemum, crown of thorn, dieffenbachia, ferns, gardenia, geranium, jade plant, palms, philodrendron, poinsettias, portulaca, zinnia	
	Insecticidal Soap	Safer's Concentrate	2F	All greenhouse ornamentals	Wet foliage thoroughly by spraying or wiping.
	Kinoprene	Enstar	5E	All greenhouse ornamentals. See label for precautions about plant injury	
	Lindane	Lindane	Several	All greenhouse ornamentals	Foliar spray, smoke, fog.
	Malathion		Fog	Carnation, chrysanthemum, geranium, snapdragon, rose	Fog only.
	Methiocarb	Grandslam	75WP	All greenhouse ornamentals	
	Naled	Dibrom	Several	All greenhouse ornamentals	Fog, smoke, vapors.
	Nicotine		Several	All greenhouse ornamentals	Emulsion, smoke.
	Oxamyl	Oxamyl	10G	Allspice, aluminum plant, ardisia, artillery plant, asparagus fern, azalea, bird's nest fern, Boston fern, caladium, carnation, chrysanthemum, croton, dieffenbachia, dracaena, gardenia, gladiolus, gypsophila, hoya, iris, ivy, jade plant, leatherleaf fern, maranta, palm (neanthe bella and Madagascar), peperomia, philodendron, rose, sansevieria, snapdragon	
		Vydate	2L	Aloe spp., alyssum, ardisia, areca palm, asparagus fern, bird's nest fern, Boston fern, bromeliad, caladium, calathea, calendula, camellia, Christmas cactus, carnation, chrysanthemum, citrus, coleus, crassula, dieffenbachia, dracaena, ficus, fuchsia, gardenia, gazania, geranium, gerbera, gladiolus, gynura, gypsophila, hedera, hibiscus, hoya, hypoestes, impatiens, iris, kalanchoe, lantana, leather-leaf fern, Madagascar palm, maranta, marigold, neanthe bella palm, nephthytis, Norfolk Island pine, oleander, orchid, pachysandra, pansy, peperomia, periwinkle, petunia, philodendron, pilea, pittosporum, podocarpus, portulaca, pothos, pyrancantha, rhododendron, Rieger begonia, rose, royal palm, saintpaulia, salvia, sansevieria, spiraea, Ti plant, verbena, wandering jew	
	Sulfotepp	Dithio Dithione	Fog, Smoke	All greenhouse ornamentals	May be formulated with tetradifon. With non-systemic insecticides, repeat application at seven-day intervals, as needed.

Continued on next page

INSECT AND MITE MANAGEMENT CHART*

INSECT OR MITE PEST	CHEMICAL MANAGEMENT			REGISTERED CROPS	COMMENTS
	COMMON NAME	BRAND NAME	FORMULATION		
Caterpillars (e.g. loopers, cutworms, leafrollers, plume moths, beet armyworms)	Acephate	Pt 1300	Aerosol	Same as for aphids	
	Bacillus thuringiensis	Dipel e.g.	WP	All greenhouse ornamentals	Foliar spray. Thorough coverage necessary.
	Bifenthrin	Talstar	10WP	All greenhouse ornamentals	
	Cyfluthrin	Tempo Decathlon	2E 20WP	All greenhouse ornamentals	
	Fenpropathrin	Tame	2.4EC	Anthurium, bedding plants, chamomile, chrysanthemum, columbine, foliage plants, geranium, gladiolus, impatiens, liriope, lily, marigold, poinsettia, snapdragon	
	Fluvalinate	Mavrik	2F	All greenhouse ornamentals	
	Lindane		WP	All greenhouse ornamentals	Foliar spray.
Fungus gnats (adults)	Resmethrin	Pt 1200	Aerosol	All greenhouse ornamentals	Aerosol. Repeat applications at 4- to 5-day intervals (adults).
(larvae)	*Bacillus thuringiensis* H-14	Gnatrol	AS 12AS	All greenhouse ornamentals	Apply as drench.
	Diazinon	Pt 265 Knox Out	2FM	Same as for aphids	
	Kinoprene	Enstar	5E	All greenhouse ornamentals. See label for precautions about plant injury	
	Oxamyl	Oxamyl	10G	Same as for aphids	Apply as described for aphids. Repeat in 4 to 6 weeks.
		Vydate	2L	Same as for aphids	
Leafminers	Abamectin	Avid	0.15EC	All greenhouse ornamentals	Foliar spray.
	Chlorpyrifos	Dursban	50WP	All greenhouse ornamentals	See label for precautions.
	Cyromazine	Citation	75WP	Container-grown chrysanthemums	
	Dichlorvos	Vapona	Fog	All greenhouse ornamentals	Effective at cooler greenhouse temperatures.
	Naled	Dibrom	Fog	All greenhouse ornamentals	May injure plants.
	Nicotine	Several	Emulsion	All greenhouse ornamentals	
	Oxamyl	Oxamyl	10G	Same as for aphids	

*Before purchasing and using any pesticide, you must check all labels for registered use, rates and application frequency. Generic names have been used for all pesticides. When possible, check the discussion of individual materials for examples of trade names. This list is presented for information only. No endorsement is intended for products mentioned, nor is criticism meant for products not mentioned.

INSECT OR MITE PEST	CHEMICAL MANAGEMENT			REGISTERED CROPS	COMMENTS
	COMMON NAME	BRAND NAME	FORMULATION		
Mealybugs	Acephate	Orthene	75SP	Foliage plants, anthurium, cactus, orchid, poinsettia	Foliar spray. Repeat at 2- to 3-week intervals. May injure some foliage plants.
		Pt 1300	Aerosol	Same as for aphids	
	Bendiocarb	Dycarb Ficam Turcam	76WP	African violet, ageratum, aglaonema, antirrhinum, ascarina, asplenium, azalea, baby's breath, begonia, calathea, calendula, celosia, chrysanthemum, cineraria, cissus, coleus, cyrtomium, daffodil, dahlia, dianthus, dieffenbachia, dracaena, dryopteris, epipremnum, fern spp., ficus, four-o-clock, fuchsia, gardenia, gazania, geranium, gladiolus, guava, hydrangea, hypoestes, impatiens, iris, ivy, lily-of-the-valley, maranta, marigold, mondograss, nasturtium, nephrolepis, nicotiana, ochrosia, pachysandra, pansy, petunia, philodendron, plumella, poinsettia, polypodium, portulaca, rose, sago palm, salvia, sansevieria, schefflera, shasta daisy, spathiphyllum, sprengeri asparagus, vandaonomea, verbena, vinca, wandering jew, zinnia	Foliar spray. Avoid use of alkaline water for best results.
	Bifenthrin	Talstar	10WP	All greenhouse ornamentals	
	Chlorpyrifos	Dursban	50WP	All greenhouse ornamentals	See label for precautions.
	Cyfluthrin	Tempo Decathlon	2E 20WP	All greenhouse ornamentals	
	Diazinon	Pt 265 Knox Out	2FM	Same as for aphids	
	Dichlorvos	Vapona	Fog, Smoke	All greenhouse ornamentals	Effective at cooler greenhouse temperature.
	d-Phenothrin	Sumithrin	2EC	Same as for aphids	Foliar spray. Repeat at 10- to 14-day intervals.
	Fenpro-pathrin	Tame	2.4EC	Same as for aphids	
	Horticul-tural Oil	Sunspray		Same as for aphids	
	Insecticidal Soap	Safer's Concentrate		All greenhouse ornamentals	Repeat at 1- to 2-week intervals.
	Kinoprene	Enstar	5E	Same as for aphids	
	Naled	Dibrom	Vapor, Fog	All greenhouse ornamentals	
	Oxamyl	Oxamyl	10G	Same as for aphids	Repeat at 3- to 5-week intervals.
		Vydate	2L	Same as for aphids	
	Sulfotepp	Dithio Plantfume 103	Fog, Smoke	All greenhouse ornamentals	

Continued on next page

INSECT AND MITE MANAGEMENT CHART*

INSECT OR MITE PEST	CHEMICAL MANAGEMENT			REGISTERED CROPS	COMMENTS
	COMMON NAME	BRAND NAME	FORMULATION		
Millipedes	Malathion	Malathion	50WP	None	Greenhouse bench spray.
Mites (Cyclamen mite)	Endosulfan	Thiodan	WP, EC	All greenhouse ornamentals	Foliar spray.
	Dicofol	Kelthane	WP	All greenhouse ornamentals	Foliar spray.
(Two-spotted spider-mite)	Abamectin	Avid	0.15EC	All greenhouse ornamentals	Foliar spray.
	Bifenthrin	Talstar	10WP	All greenhouse ornamentals	
	Dichlorvos	Vapona	Fog, Smoke	All greenhouse ornamentals	Effective at cooler greenhouse temperature.
	Dicofol	Kelthane	WP Fog	All greenhouse ornamentals. Carnation, chrysanthemum, rose	Foliar spray.
	Dienochlor	Pentac	WP, F	All greenhouse ornamentals	Foliar spray.
		Pentac	Fog	Carnation, chrysanthemum, rose	
	Fenbutatin-oxide	Vendex	WP, F	All greenhouse ornamentals	Foliar spray.
	Fenpro-pathrin	Tame	2.4EC	Same as for aphids	
	Fluvalinate	Mavrik	2F	All greenhouse ornamentals	Use higher rate for mite control.
	Horticul-tural Oil	Sunspray		Same as for aphids	
	Insecticidal Soap	Safer's Concentrate		All greenhouse ornamentals	Repeat applications at 7- to 10-day intervals.
	Naled	Dibrom	EC	All greenhouse ornamentals	Vapors.
	Oxamyl	Oxamyl	10G	Same as for aphids	
	Sulfotepp	Dithio Dithione	Fog, Smoke	All greenhouse ornamentals	
Scale insects	Acephate	Orthene	75SP	Foliage plants, anthurium, cactus, orchid, poinsettia	Foliar spray. Repeat at 2- to 3-week intervals. May injure some foliage plants.
		Pt 1300		Same as for aphids	
	Bendiocarb	Dycarb Ficam Turcam	76WP	Same as for mealybugs	

*Before purchasing and using any pesticide, you must check all labels for registered use, rates and application frequency. Generic names have been used for all pesticides. When possible, check the discussion of individual materials for examples of trade names. This list is presented for information only. No endorsement is intended for products mentioned, nor is criticism meant for products not mentioned.

INSECT OR MITE PEST	CHEMICAL MANAGEMENT			REGISTERED CROPS	COMMENTS
	COMMON NAME	BRAND NAME	FORMULATION		
Scale insects (continued)	Chlorpyrifos	Dursban	50WP	All greenhouse ornamentals	See label for precautions.
	Diazinon	Pt 265 Knox Out	2FM	Same as for aphids	
	Horticul-tural Oil	Sunspray		Same as for aphids	
	Kinoprene	Enstar	5E	Same as for aphids	
	Malathion		Fog	All greenhouse ornamentals	
	Oxamyl	Oxamyl	10G	Same as for aphids	
		Vydate	L	Same as for aphids	
	Sulfotepp	Dithio Dithione	Fog, Smoke	All greenhouse ornamentals	
Slugs	Metaldehyde	Snarol Slugit Bug-Geta	Several	All greenhouse ornamentals	Bait, dust, emulsion.
	Methiocarb	Slug-Geta Mesurol	Bait	All greenhouse ornamentals	
Sowbugs	Malathion		WP		Spray or dust growing medium.
	Cyfluthrin	Decathlon	20WP	All greenhouse ornamentals	
Springtails	Malathion		WP	None	Spray or dust growing medium suface.
Thrips	Acephate	Orthene	75SP	Anthurium, carnation, cactus, chrysanthemum, foliage plants, orchid, poinsettia	Foliar spray may injure some cultivars.
		Pt 1300	Aerosol	Same as for aphids	
	Bendiocarb	Dycarb Ficam Turcam	76WP	Same as for mealybugs	
	Chlorpyrifos	Dursban	50WP	All greenhouse ornamentals	See label for precautions.
	Cyfluthrin	Tempo Decathlon	2E 20WP	All greenhouse ornamentals	
	Diazinon		Fog	Aster, carnations, chrysanthemum, snapdragon	
	Dichlorvos	Vapona	Fog	All greenhouse ornamentals	
	Fluvalinate	Mavrik	2F	All greenhouse ornamentals	
	Lindane		Several	All greenhouse ornamentals	Foliar spray, dust, fog.
	Malathion		Fog	Carnation, chrysanthemum, geranium, rose, snapdragon	
	Naled	Dibrom	EC	All greenhouse ornamentals	Vapors.

Continued on next page

202

INSECT AND MITE MANAGEMENT CHART*

INSECT OR MITE PEST	CHEMICAL MANAGEMENT			REGISTERED CROPS	COMMENTS
	COMMON NAME	BRAND NAME	FORMULATION		
Thrips (continued)	Nicotine		Several	All greenhouse ornamentals	Spray, dust, emulsion, smoke.
	Resmethrin	Pt 1200	Aerosol	Chrysanthemum	
	Sulfotepp	Dithio Plantfume 103	Fog, Smoke	All greenhouse ornamentals	Repeat applications of all materials (except granular formulations) at 4- to 5-day intervals to protect flowers.
Whiteflies	Acephate	Pt 1300	Aerosol	Same as for aphids	
	Bifenthrin	Talstar	10WP	All greenhouse ornamentals	
	Cyfluthrin	Tempo Decathlon	2E 20WP	All greenhouse ornamentals	
	Dichlorvos	Vapona	Several	All greenhouse ornamentals	Fog, Smoke.
	d-Phenothrin	Sumithrin	2EC	Same as for aphids	Foliar spray. Apply in late afternoon or night. Repeat weekly.
	Endosulfan	Thiodan	Several	All greenhouse ornamentals	Foliar spray, dust, smoke.
	Fenpro-pathrin	Tame	2.4EC	Same as for aphids	
	Fluvalinate	Mavrik	2F	All greenhouse ornamentals	
	Horticul-tural Oil	Sunspray		Same as for aphids	
	Insecticidal Soap	Safer's Concentrate		Same as for aphids	
	Kinoprene	Enstar	5E	All greenhouse ornamentals. See label for precautions regarding plant injury	
	Lindane		Several	All greenhouse ornamentals	Foliar spray, fog, smoke.
	Malathion		Fog	Carnation, chrysanthemum, rose, geranium, snapdragon	
	Naled	Dibrom	Vapor, Smoke	All greenhouse ornamentals	
	Oxamyl	Oxamyl	10G	Same as for aphids	
		Vydate	L	Same as for aphids	

*Before purchasing and using any pesticide, you must check all labels for registered use, rates and application frequency. Generic names have been used for all pesticides. When possible, check the discussion of individual materials for examples of trade names. This list is presented for information only. No endorsement is intended for products mentioned, nor is criticism meant for products not mentioned.

203

INSECT OR MITE PEST	CHEMICAL MANAGEMENT			REGISTERED CROPS	COMMENTS
	COMMON NAME	BRAND NAME	FORMULATION		
Whiteflies (continued)	Pyrethrum	Pyrenone	EC	African violet, aster, azalea, begonia, camellia, carnations, chrysanthemum, dahlia, geranium, gladiolus, marigold, rose, rubber plant, wandering jew	
	Resmethrin	SBP-1382	EC	Ageratum, azalea, aster, begonia, calendula, chrysanthemum, coleus, geranium, ivy, petunia, poinsettia, rose, salvia	Foliar spray, Apply resmethrin during late afternoon or night. Repeat weekly.
		Pt 1200	Aerosol	All greenhouse ornamentals	
			Fog	Arum lily, azalea, begonia, bird of paradise, Chinese fan palm, coleus, crane lily, dieffenbachia, English ivy, foundation palm, gardenia, geranium, India rubber tree, Norfolk Island pine, poinsettia, palms, snapdragon, wandering jew, zephyr lily	
	Sulfotepp	Dithio Plantfume 103	Fog, Smoke	All greenhouse ornamentals	

OFA

Use Rates For Insecticides And Miticides Registered On Floriculture Crops

Richard K. Lindquist, Extension Entomologist, The Ohio State University

COMMON NAME	BRAND NAME(S)	PESTICIDE CLASS*	AMOUNT TO USE	HOW APPLIED**	AMOUNT OF WP TO MAKE ONE OUNCE
Abamectin	Avid 0.15EC	O	8 to 16 fluid ounces per acre	HV, LV	
Acephate	Orthene 75SP	OP	5.3 to 10.5 ounces per 100 gallons	HV	4 tablespoons + 1 teaspoon
Bacillus thuringiensis	Dipel	M	16 ounces per 100 gallons	HV	3 tablespoons + 1 teaspoon
Bacillus thuringiensis H-14	Gnatrol	M	16 to 128 ounces per 100 gallons 8 to 64 ounces per 100 gallons	D D	
Bendiocarb	Dycarb 76WP Ficam 76WP	C	12 to 40 ounces per 100 gallons	HV	5 tablespoons
Bifenthrin	Talstar 10WP	P	0.6 to 2.4 ounces per 10 gallons	HV	3 tablespoons + 1 teaspoon
Chlorpyrifos	Dursban 50WP	OP	8 to 16 ounces per 100 gallons	HV	4 tablespoons + 2 teaspoons
Cyfluthrin	Tempo 2EC Decathlon 20WP	P P	1 to 2 ounces per 100 gallons 1.3 to 1.9 ounces per 100 gallons	HV HV	
Cyromazine	Citation 75WP	IGR	2.7 ounces per acre, in a minimum of 100 gallons	HV	
d-Phenothrin	Sumithrin 2EC	P	1 to 2 pints per 100 gallons	HV	
Diazinon	Pt 265 Knox Out	OP	3 to 6 pints per 100 gallons	HV	
Dicofol	Kelthane 35WP	CH	1 to 1.3 pounds per 100 gallons	HV	5 tablespoons + 2 teaspoons
Dienochlor	Pentac 50WP Pentac Aquaflow	CH	8 ounces per 100 gallons 0.5 pint per 100 gallons	HV HV	3 tablespoons + 0.5 teaspoon
Endosulfan	Thiodan 50WP Thiodan 3EC	CH	16 ounces per 100 gallons 0.67 quart per 100 gallons	HV HV	3 tablespoons + 1 teaspoon
Fenbutatin-Oxide	Vendex 50WP Vendex 4F	OP	8 to 16 ounces per 100 gallons 0.5 to 1 pint per 100 gallons	HV HV	5 tablespoons + 1 teaspoon

* B = Botanical; C = Carbamate; CH = Chlorinated hydrocarbon; IGR = Insect growth regulators; M = Microbial; O = Other; OP = Organophosphate; P = Pyrethroid

**HV = High volume spray, LV = Low volume spray, GMS = Growing medium surface spray, D = Drench, G = Granule

COMMON NAME	BRAND NAME(S)	PESTICIDE CLASS*	AMOUNT TO USE	HOW APPLIED**	AMOUNT OF WP TO MAKE ONE OUNCE
Fenpropathrin	Tame 2.4EC	P	5.3 to 16 ounces per 100 gallons	HV	
Fluvalinate	Mavrik 2F	P	2 to 5 ounces per 100 gallons	HV	
Horticultural Oil	Sunspray	O	2.5 to 5 ounces per gallon	HV	
Insecticidal Soap	Safer's	O	8 to 20 pints per 100 gallons (1:100 to 2.5:100)	HV	
Kinoprene	Enstar 5E	IGR	6 to 20 ounces per 100 gallons 1 ounce per 5 gallons	HV D (Pot submersion)	
Malathion	Malathion 57EC	OP	1 teaspoon per gallon per 150 square feet	GMS	
	Malathion 50		1 teaspoon per gallon per 150 square feet	GMS	
Methiocarb	Grandslam 75WP	C	8 to 16 ounces per acre	HV, LV	
Oxamyl	Oxamyl 10G	C	1.4 to 1.9 pounds per 1,000 square feet	G	
	Vydate L		1 to 4 pints per 100 gallons	HV,D	
Permethrin	Pramex 1EC	P	1 to 3.2 pints per 100 gallons	HV	
	Pounce 3.2EC		1.5 pints per 100 gallons	HV	
Pyrethrum	Pyrenone Crop Spray	B	2 to 6 ounces per 100 gallons	HV	
Resmethrin	SBP-1382 2EC	P	1 pint per 100 gallons	HV	

CFA

206

Insecticides And Miticides Registered For Management Of Insects And Mites On Certain Greenhouse Floral Crops*

Richard K. Lindquist, Extension Entomologist, Department of Entomology, The Ohio State University

Abamectin (Avid)
Abamectin is an insecticide/miticide registered for control of spider mites and leafminer larvae. Use the higher rate for leafminer control. The active ingredient is derived from naturally-occurring soil microorganisms.

Acephate (Orthene 75SP, Pt 1300)
Acephate is effective against a wide range of chewing and sucking pests. It is an excellent insecticide, but phytotoxicity has occurred on several chrysanthemum cultivars and foliage plants. Be careful when applying this material to any new cultivar. Wait two weeks for symptoms to appear.

***Bacillus thuringiensis* var. Kurstaki** (e.g. Dipel)
A microbial insecticide, *Bacillus thuringiensis,* is effective against several species of chewing caterpillars. The pest must eat this material for it to be effective, so thorough coverage is necessary for best results. Caterpillars stop eating soon after contacting the material but might not die for two to three days. When used as directed, no plant injury has been reported.

***Bacillus thuringiensis*, H-14** (Gnatrol)
This microbial insecticide has different activity than the "other" B.t. (Dipel). It is registered for controlling fungus gnat larvae, and is applied as a drench. Gnatrol has the same low mammalian toxicity and plant safety advantages as Dipel.

Bendiocarb (Dycarb, Ficam, Turcam)
Bendiocarb is a carbamate insecticide registered for control of several common insect and mite pests on a wide range of ornamentals. Avoid use of alkaline water for maximum effectiveness.

Bifenthrin (Talstar 10WP)
Talstar is a pyrethroid insecticide/miticide that is effective in controlling most aphids, spider mites, whiteflies, mealybugs, scales and caterpillars found on floral crops. Talstar has no known systemic or vapor activity, so thorough coverage is necessary to obtain good control.

Chlorpyrifos (Dursban)
Chlorpyrifos is a spectrum organophosphate insecticide registered on most greenhouse ornamentals. Only the 50WP formulation is registered on greenhouse crops.

Cyfluthrin (Tempo 2, Decathlon)
Cyfluthrin is a broad-spectrum pyrethroid insecticide that presently is available in two formulations. Pests controlled include whiteflies, caterpillars, thrips, and some aphid species.

Cyromazine (Citation 75WP)
Citation is an insect growth regulator (IGR) that is registered for leafminer control on container-grown chrysanthemums. It has some systemic effects, but should be applied as a high-volume spray.

Diazinon (Fog, Pt 265)
Diazinon is registered as fogging and microencapsulated formulations. Follow label directions. The microencapsulated formulation has been quite effective against mealybugs and scale insects.

Dichlorvos (Vapona, DDVP)
Dichlorvos can be used as a vapor, fog or mechanical mist. Some ornamentals may be injured, particularly if greenhouse temperatures are too high. Dichlorvos is effective at 60 to 65°F.

Dicofol (Kelthane)
Dicofol is registered as a foliar spray or fog for two-spotted spider mite control. Repeat applications often during warm weather.

Dienochlor (Pentac WP, Pentac Aquaflow)
Dienochlor is registered as a foliar spray or fog for two-spotted spider mite control. Repeat applications often during warm weather. It is very slow acting.

d-Phenothrin (Sumithrin, Pt 1400)
This is a pyrethroid registered for whitefly, aphid, spider mite and mealybug control on a wide range of plants. Repeat applications are necessary to maintain control.

Endosulfan (Thiodan)
Endosulfan is a foliar spray that is effective at higher greenhouse temperatures. The EC formulation has injured some chrysanthemum and geranium cultivars.

Fenbutatin-oxide (Vendex 50 WP, Vendex 4F)
Fenbutatin-oxide is a miticide that is registered for use on greenhouse ornamentals. It is best used in a preventive control program rather than trying to reduce an already heavy mite population. Available in wettable powder and flowable formulations.

Fenpropathrin (Tame 2.4EC)
Tame is another pyrethroid insecticide/miticide that is active against many pests. It it often combined with Orthene for control of pests such as whiteflies.

Fluvalinate (Mavrik Aquaflow)
This pyrethroid insecticide/miticide has given fair to good control of many aphid, thrips and spider mite populations. Mavrik may cause throat irritation if respirators do not fit properly.

Horticultural Oil (Sunspray)
This horticultural oil can be applied to growing crops for control of a range of insect and mite pests including spider mites and whiteflies. Begin applications with the lower application rate.

Insecticidal Soap (Safer's)
Safer's contains potassium salts of fatty acids. It is registered for control of aphids, mealybugs, whiteflies, earwigs and spider mites.

Kinoprene (Enstar 5E)
Enstar has returned to the market after an absence of several years. It is an insect growth regulator used to control whiteflies, aphids, mealybugs and fungus gnats. If whitefly populations are well-established when first using Enstar, combine it with a pyrethroid to reduce adult numbers.

Lindane
Lindane is a broad spectrum chlorinated hydrocarbon insecticide. It is registered at present as a spray, fog, smoke or dust.

Malathion
Malathion is registered as a fogging formulation and as a growing medium surface spray for millipede, springtail and sowbug control.

Metaldehyde
Metaldehyde, which is used for slug control, is available in several formulations. Follow label directions.

Methiocarb (Grandslam, Mesurol)
Grandslam is a 75WP formulation that is applied as a foliar spray for aphid (also mite, slug, snail) management. Mesurol is a pelletized bait formulation for slug control. Scatter pellets on growing medium surface according to label directions.

Naled (Dibrom)
This is registered for vapor or fog treatments. Concentrate is highly corrosive to metals. Follow label directions.

Oxamyl (Oxamyl 10G, Vydate L)
Oxamyl is a systemic insecticide/nematicide registered on many ornamentals. Oxamyl 10G may be incorporated into media before planting or broadcast on media after planting. Vydate L may be used as a spray; growing medium drench; or root, bulb, or corm dip.

Permethrin (Pramex, Pounce)
A pyrethroid insecticide, permethrin will control most whiteflies, caterpillars, and leafminer adults.

Pyrethrum (Pyrenone Crop Spray)
Pyethrum is a 6% EC, synergized with piperonyl butoxide, that is especially effective against whiteflies. As with all pyrethrin and pyrethroid compounds, there is virtually no residual effect, and applications must be repeated frequently.

Resmethrin (SBP 1382, Pt 1200)
Resmethrin is a synthetic pyrethroid material registered for use as a foliar spray, aerosol or fog. Best results are obtained if greenhouse temperatures are cool (50 to 72°F). Rapid control results after application, but residual life is short.

Sulfotepp (Dithio, Dithione, Plantfume 103)
Use as fog or smoke generator. Follow label directions.

*This list is presented for information only. No endorsement is intended for products mentioned, nor is criticism meant for products not mentioned. Before purchasing and using any pesticide, you must check all labels for registered use, rates, and application frequency.

OFA

208

OHIO FLORISTS' ASSOCIATION BULLETIN

DISEASE MANAGEMENT CHART*

C.C. Powell, Extension Plant Pathologist, The Ohio State University

DISEASE	CHEMICAL MANAGEMENT			REGISTERED CROPS	USES**	COMMENTS
	COMMON NAME	BRAND NAME	FORMULATION			
Rhizoctonia damping off, root and crown rot	Benomyl	Benlate Tersan 1991	50DF 50DF	Herbaceous annuals, perennials, and bedding plants	OU GH	
	Ethazol + Thiophanate-methyl	Banrot	40WP 8G	African violet, ageratum, aglaonema, aralia, ajuga, alyssum, aster, azalea, balsam, begonia, cactus, calendula, camellia, carnation, celosia, chamaedorea palm, chrysanthemum, coleus, croton, dahlia, delphinium, dieffenbachia, dracaena, dusty miller, Easter lily, epipremnum, euonymus, fatsia, fern, ficus, fittonia, gardenia, geranium, gynura, gypsophila, hoya, hydrangea, impatiens, ivy, kalanchoe, larkspur, lobelia, maranta, marigold, nasturtium, nautilocalyx, pansy, peperomia, petunia, philodendron, phlox, pilea, poinsettia, salvia, schefflera, snapdragon, statice, syngonium, tradescantia, verbena, zinnia, zygocactus	OU GH	
	Iprodione	Chipco 26019	50WP	Ageratum, alyssum, aphelandra, artemisia, aster, azalea, cactus, calendula, carnation, chrysanthemum, cineraria, coleus, coral bells, crassula, croton, columbine, cyclamen, daffodil, dahlia, delphinium, deutzia, dianthus, dieffenbachia, dizygotheca, dracaena, English ivy, episcia, ficus, gazania, geranium, gladiolus, gloxinia, gypsophila, hoya, hydrangea, iris, kalanchoe, lily, lipstick vine, marigold, monarda, palm, pansy, peperomia, periwinkle, philodendron, phlox, pilea, pittosporum, poinsettia, poppy, primrose, protea, rose, salvia, schefflera, snapdragon, spathiphyllum, statice, tree ivy, tulip, violet, zinnia	OU GH	
	Quintozene	Terraclor	75WP	Tropical foliage plants, bedding and flowering plants, herbaceous and woody ornamentals — growing medium drench at time of seeding and transplanting Easter lily, iris, hyacinth, narcissus, tulips — preplant broadcast for field grown crops	OU GH	Label lists specific plant types as well as "similar plants" in categories noted. Easter lily bulb dip.
		Turfcide	10G	African violet, begonia, carnation, chrysanthemum, poinsettia, snapdragon, and similar bedding plants	OU	Labeled on several other crops as a broadcast soil treatment in the field.
	Thiophanate-methyl	Cleary's 3336-F	4F 50WP	Herbaceous annuals, perennials and bedding plants	OU GH	The flowable is labeled as a preplant plant dip treatment as well as a drench.

*This list is presented for information only. No endorsement is intended for products mentioned, nor is criticism meant for products not mentioned. Before purchasing and using any fungicide, you must check all labels for registered use, rates and application frequency. It is illegal to use any pesticide in a manner inconsistent with the labeling.

**OU = Outdoor Use; GH = Greenhouse Use.

DISEASE	CHEMICAL MANAGEMENT			REGISTERED CROPS	USES**	COMMENTS
	COMMON NAME	BRAND NAME	FORMULATION			
Botrytis damping off and cutting rot	Benomyl	Benlate Tersan 1991	50DF 50DF	Herbaceous annuals, perennials and bedding plants	OU GH	Widespread pathogen resistance is a problem.
	Thiophanate-methyl	Cleary's 3336-F	4F 50WP	Herbaceous annuals, perennials and bedding plants	OU GH	Widespread pathogen resistance is a problem.
	Mancozeb	Manzate 200	75DF	African violet, *Aglaonema commutatum*, anthurium, areca palm, China aster, azalea, baby's breath, begonia, carnation, Christmas cactus, chrysanthemum, *Crassula argentea*, croton, dahlia, daisy (transvaal), dieffenbachia, dracaena, dusty miller, Easter lily, fern, ficus, fittonia, geranium, gladiolus, gold-dust tree, gypsophila, hollyhock, ivy, lily, Madagascar palm, mahonia, nephthytis, Norfolk Island pine, pansy, peperomia, periwinkle, petunia, philodendron, pilea, pittosporum, poinsettia, primrose, protea, rose, santolina, schefflera, snapdragon, statice, strawflower, velvet plant, Venus flytrap, verbena, yucca, zebra plant, zinnia	OU GH	
		Dithane M-45, F-45, or DF	80WP 4F, or 75DF	African violet, begonia, chrysanthemum, dahlia, fuschia, gladiolus, hydrangea, lily, marigold, narcissus, orchid, tulip	OU GH	
	Iprodione	Chipco 26019	50WP 4F	Ageratum, alyssum, aphelandra, artemisia, aster, azalea, cactus, calendula, carnation, chrysanthemum, cineraria, coleus, coral bells, crassula, croton, columbine, cyclamen, daffodil, dahlia, delphinium, deutzia, dianthus, dieffenbachia, dizygotheca, dracaena, English ivy, episcia, ficus, gazania, geranium, gladiolus, gloxinia, gypsophila, hoya, hydrangea, impatiens, iris, kalanchoe, lily, lipstick vine, marigold, monarda, palm, pansy, peperomia, periwinkle, philodendron, phlox, pilea, pittosporum, poinsettia, poppy, pothos, primrose, protea, rose, salvia, schefflera, snapdragon, spathiphyllum, statice, tree ivy, tulip, violet, zinnia	OU GH	Pathogen resistance can occur.
Water mold damping off, root and crown rot (*Pythium* and *Phytophthora*)	Captan	Captan	50WP	Azalea, begonia, carnation, chrysanthemum, gladiolus Flowers, roses	OU OU GH	Cutting, tuber and corm dips. Preplant use only.
		Orthocide	50WP	Flowers, roses	OU GH	Preplant use only.
		Orthocide	10D 7.5D 5D	Flowers, roses	OU GH	Dusts for preplant use in growing medium.
	Fosetyl Al	Aliette	80WP	**Foliar application**—Plants such as aglaonema, aphelandra, azalea, begonia, bougainvillea, boxwood, *Cattleya skinneri*, cissus, dieffenbachia, geranium, hibiscus, impatiens, leatherleaf fern, marigold, pansy, petunia, pittosporum, philodendron, pothos, rhododendron, spathiphyllum, vinca, zinnia	OU GH	Not registered in California on some of the plants listed. See label. Do not exceed one application every 30

Continued on next page

DISEASE MANAGEMENT CHART*

DISEASE	CHEMICAL MANAGEMENT			REGISTERED CROPS	USES**	COMMENTS
	COMMON NAME	BRAND NAME	FORMULATION			
Water mold, damping off root and crown rot (*Pythium* and *Phytophtora*) (continued)	Fosetyl Al (continued)	Aliette (continued)	80WP (continued)	**Drench application**—Plants such as aphelandra, azalea, boxwood, cissus, dieffenbachia, philodendron, pittosporum, rhododendron, schefflera and spathiphyllum		days. Do not tank mix with Daconil 2787.
	Etridiazole	Terrazole	25EC	African violet, aglaonema, alyssum, anthurium, calendula, celosia, Chinese evergreen, chrysanthemum, dahlia, dianthus, dieffenbachia, geranium, marigold, nephthytis, pansy, peperomia, petunia, pilea, pothos, philodendron, rhododendron, salvia, snapdragon, verbena, vinca, zinnia	OU GH	
			35WP	African violet, ageratum, aglaonema, alyssum, anthurium, arctostaphylus, aster, balsam, begonia, calendula, caladium, calceolaria, carnation, celosia, ceanothus, chrysanthemum, Chinese evergreen, coleus, dahlia, daphne, dianthus, dieffenbachia, Easter lily, echeveria, foxglove, geranium, gerbera, gypsophila, heather, impatiens, larkspur, marigold, nephthytis, orchid, pansy, peperomia, petunia, philodendron, pilea, poinsettia, portulaca, pothos, salvia, sinningia, snapdragon, statice, stokesia, verbena, vinca, zinnia, zygocactus	OU GH	
			5G	Ageratum, African violet, aglaonema, alyssum, anthurium, arctostaphylus, aster, azalea, balsam, begonia, brassaia, caladium, calceolaria, calendula, carnation, camellia, Chinese evergreen, ceanothus, celosia, chrysanthemum, coleus, dahlia, dianthus, dieffenbachia, dracaena, Easter lily, echeveria, epipremnum, ficus, foxglove, geranium, gerbera, gloxinia, gypsophila, impatiens, larkspur, marigold, nephthytis, orchid, pansy, petunia, peperomia, philodendron, pilea, poinsettia, portulaca, rhododendron, salvia, snapdragon, stokesia, sinningia, verbena, vinca, zinnia, zygocactus	OU GH	
			4E	African violet, aglaonema, alyssum, anthurium, azalea, cactus, caladium, calathea, calendula, celosia, chamaedorea, Chinese evergreen, crassula, chrysanthemum, coleus, dahlia, dianthus, dieffenbachia, Easter lily, euonymus, ficus, geranium, gynura, gerbera, hedera, hoya, kalanchoe, larkspur, maranta, marigold, nephrolepis, nephthytis, pansy, peperomia, petunia, pilea, phlox, poinsettia, pothos, rhododendron, salvia, snapdragon, stromanthe, sinningia, verbena, vinca, zinnia, zygocactus	OU GH	
		Truban	5G	African violet, ageratum, aglaonema, alyssum, anthurium, aster, azalea, balsam, begonia, brassaia, caladium, calceolaria, calendula, camellia, carissa, carnation, celosia, coleus, Chinese evergreen, chrysanthemum, dahlia, dianthus, dieffenbachia, dracaena, Easter lily, echeveria, epipremnum, ficus, foxglove, geranium, gerbera, gloxinia, gypsophila, impatiens, larkspur, marigold, nephthytis, orchid, pansy,	OU GH	Preplant use only.

*This list is presented for information only. No endorsement is intended for products mentioned, nor is criticism meant for products not mentioned. Before purchasing and using any fungicide, you must check all labels for registered use, rates and application frequency. It is illegal to use any pesticide in a manner inconsistent with the labeling.

**OU = Outdoor Use; GH = Greenhouse Use.

DISEASE	CHEMICAL MANAGEMENT			REGISTERED CROPS	USES**	COMMENTS
	COMMON NAME	BRAND NAME	FORMULATION			
Water mold damping off root and crown rot (*Pythium* and *Phytophthora*) (continued)	Etridiazole (continued)	Truban (continued)	5G (continued)	peperomia, petunia, philodendron, pilea, poinsettia, portulaca, salvia, sinningia, snapdragon, stokesia, verbena, vinca, zinnia, zygocactus		
			30WP	African violet, ageratum, aglaonema, alyssum, anthurium, aster, balsam, begonia, brassaia, caladium, calceolaria, calendula, camellia, carnation, celosia, Chinese evergreen, coleus, chrysanthemum, dahlia, dianthus, dieffenbachia, Easter lily, echeveria, foxglove, geranium, gerbera, gypsophila, impatiens, larkspur, marigold, nephthytis, orchid, pansy, peperomia, petunia, pilea, portulaca, pothos, philodendron, poinsettia, salvia, sinningia, snapdragon, stokesia, verbena, vinca, zinnia, zygocactus	OU GH	
			25EC	African violet, aglaonema, alyssum, anthurium, azalea, brassaia, cactus, caladium, calathea, calendula, celosia, crassula, dahlia, dianthus, dieffenbachia, Easter lily, ficus, geranium, gerbera, gynura, hedera, hoya, kalanchoe, larkspur, maranta, marigold, nephrolepis, nephthytis, pansy, peperomia, petunia, philodendron, phlox, pilea, poinsettia, pothos, salvia, sinningia, snapdragon, stromanthe, verbena, vinca, zinnia, zygocactus	OU GH	
	Etridiazole + Thiophanate-methyl	Banrot	40WP 8G	African violet, ageratum, aglaonema, aralia, ajuga, alyssum, aster, azalea, balsam, begonia, cactus, caladium, calendula, camellia, carnation, celosia, chamaedorea palm, chrysanthemum, coleus, croton, dahlia, delphinium, dieffenbachia, dracaena, dusty miller, Easter lily, epipremnum, euonymus, fatsia, fern, ficus, fittonia, gardenia, geranium, gynura, gypsophila, hoya, hydrangea, impatiens, ivy, kalanchoe, larkspur, lobelia, maranta, marigold, nasturtium, nautilocalyx, pansy, peperomia, petunia, philodendron, phlox, pilea, poinsettia, salvia, schefflera, snapdragon, statice, syngonium, tradescantia, verbena, zinnia, zygocactus	OU GH	
	Metalaxyl	Subdue	25EC 2G	African violet, ageratum, aglaonema, andromeda, aphelandra, aster, azalea, baby's breath, begonia, caladium, carnation, ceanothus, chrysanthemum, coleus, dieffenbachia, delphinium, Easter lily, English ivy, geranium, gloxinia, ilex, impatiens, marigold, pansy, peperomia, petunia, philodendron, phlox, pinks, poinsettia, pothos, primrose, rhododendron, rose, salvia, schefflera, shasta daisy, snapdragon, verbena, vinca, zinnia, zygocactus	OU GH	
	Propamocarb	Banol	66.5EC	African violet, ageratum, alyssum, aster, azalea, browallia, carnation, celosia, chrysanthemum, coleus, dahlia, dusty miller, Easter lily, fern, geranium, gloxinia, impatiens, lobelia, marigold, pansy, petunia, poinsettia, portulaca, salvia, snapdragon, verbena, violet, vinca, and woody ornamentals	OU	
Rusts	Chlorothalonil	Daconil 2787	75WP 4F	Hollyhock, hydrangea, geranium	OU GH	
	Ferbam	Ferbam	76WP	Carnation, rose, snapdragon	OU	

Continued on next page

DISEASE MANAGEMENT CHART*

DISEASE	CHEMICAL MANAGEMENT			REGISTERED CROPS	USES**	COMMENTS
	COMMON NAME	BRAND NAME	FORMULATION			
Rusts (continued)	Mancozeb	Dithane M-45, F-45, or DF	80WP 4F or 75 DF	Aster, carnation, chrysanthemum, fuchsia, geranium, hollyhock, rose, snapdragon	OU GH	
		Manzate 200	75DF	African violet, *Aglaonema commutatum*, anthurium, areca palm, China aster, azalea, baby's breath, begonia, carnation, Christmas cactus, chrysanthemum, *Crassula argentea*, croton, dahlia, daisy (transvaal), dieffenbachia, dracaena, dusty miller, Easter lily, fern, ficus, fittonia, geranium, gladiolus, gold-dust tree, gypsophila, hollyhock, ivy, lily, Madagascar palm, mahonia, nephthytis, pansy, peperomia, periwinkle, petunia, philodendron, pilea, Norfolk Island pine, pittosporum, poinsettia, primrose, protea, rose, santolina, schefflera, snapdragon, statice, strawflower, velvet plant, Venus flytrap, verbena, yucca, zebra plant, zinnia	OU GH	
	Oxycarboxin	Plantvax	5L	Carnation	GH	
		Plantvax	75WP	Geranium, rose, snapdragon	GH	
	Triadimefon	Strike	25DF	Ageratum, aster, canna, carnation, chrysanthemum, daisy, dianthus, four o'clock, geranium, hollyhock, marigold, pansy, petunia, phlox, salvia, snapdragon, sunflower (ornamental only)—outdoor only. Calendula, carnation, chrysanthemum, daisy, Boston fern, geranium, snapdragon—greenhouse	OU GH	Do not exceed labeled rates or frequencies. Not labeled in California on some of the crops listed.
	Triforine	Triforine	18EC	Aster, carnation, rose	OU	Greenhouse roses also labeled.
Powdery mildews	Benomyl	Benlate Tersan 1991	50DF	Rose, flowers, ornamentals	OU GH	
	Dinocap	Karathane	19.5WP	African violet, aster, begonia, belladonna, calendula, chrysanthemum, dahlia, delphinium, gerbera, hydrangea, larkspur, rose, snapdragon	OU GH	Generally not used on open flowers.
	Dodemorph	Milban	39EC	African violet, begonia, chrysanthemum, grape ivy, kalanchoe, lilac, rose, zinnia	GH	May injure some varieties. Check label.
	Fenarimol	Rubigan EC	12.5EC	Rose — greenhouse and field. Begonia, calendula, chrysanthemum, dahlia, delphinium, hydrangea, phlox, verbena, zinnia — field grown	OU GH	Growth effects may be noted under cool, foggy, or overcast conditions.
		Rubigan AS	11.6EC	Begonia, calendula, chrysanthemum, dahlia, delphinium, hydrangea, phlox, rose, sweet pea, verbena, zinnia	OU	See above.

*This list is presented for information only. No endorsement is intended for products mentioned, nor is criticism meant for products not mentioned. Before purchasing and using any fungicide, you must check all labels for registered use, rates and application frequency. It is illegal to use any pesticide in a manner inconsistent with the labeling.

**OU = Outdoor Use; GH = Greenhouse Use.

DISEASE	CHEMICAL MANAGEMENT			REGISTERED CROPS	USES**	COMMENTS
	COMMON NAME	BRAND NAME	FORMULATION			
Powdery mildews (continued)	Picro cupric ammonium formate and tannate complex	Phyton 27	5.5EC	Roses	OU	Mix carefully. Begin with lower dosage and increase as needed.
	Piperalin	Pipron	82.4EC	Chrysanthemum, dahlia, lilac, phlox, rose, zinnia	OU	
	Propiconazole	Banner	14.3EC	Calendula, delphinium, roses	OU	
	Sulfur	Flotox	90 Dust or WP	Chrysanthemum, dahlia, rose	OU	May burn foliage if temperature is high (90 to 95°F) at time of application.
		Sulfur	95 Dust or WP	Calendula, chrysanthemum, dahlia, delphinium, phlox, rose, sweet pea	OU	
	Thiophanate-methyl	Cleary's 3336	4F	Ornamentals, roses, flowers	OU GH	
	Thiophanate-methyl + Mancozeb	Zyban Duosan	75WP	Kalanchoe, phlox, rose, stock, zinnia	OU GH	
	Triadimefon	Strike	25DF	Ageratum, azalea, begonia, carnation, chrysanthemum, dahlia, delphinium, gardenia, geranium, hollyhock, pansy, petunia, phlox, rose, salvia, sedum, snapdragon, sunflower (ornamental only), zinnia African violet, calendula, carnation, chrysanthemum, cineraria, crassula, daisy, geranium, gerbera, grape ivy, kalanchoe, rose, snapdragon	OU GH	Do not exceed labeled rates or frequencies. Not labeled in California on some of the crops listed.
	Triforine	Triforine	18.2EC	Calendula, dahlia, phlox, snapdragon, rose, zinnia	OU GH	
Bacterial diseases	Streptomycin	Agri-Step	21.2WP	Chrysanthemum—bacterial wilt	OU	
		Agrimycin	21.2WP	Dieffenbachia—bacterial stem rot Philodendron—*Xanthomonas* leaf rot Rose—crown gall	OU	Soak cuttings 20 minutes. Plant dip.
	Fixed Coppers:	Bordeaux Mixture	12.75WP	Geranium—leaf spot	OU	
		Bordo-Mix	12.75WP	Chrysanthemum—leaf spot.	OU	
	Cupric hydroxide	Kocide 101	77WP	Aralia, begonia, carnation, ivy, philodendron—bacterial leaf spots	OU GH	
	Picro cupric ammonium formate and tannate complex	Phyton 27	5.5EC	Cyclamen — soft rot	OU	Mix carefully.
Root diseases caused by soil nematodes	Fenamiphos	Nemacur	10G	Anthurium, azalea, cactus, gardenia, hibiscus, iris bulbs, ivy (Baltic), leatherleaf fern, lily bulbs, narcissus bulbs, rose, sedum, yucca	OU	Only for professional use. Follow label closely.

Continued on next page

DISEASE MANAGEMENT CHART*

DISEASE	CHEMICAL MANAGEMENT			REGISTERED CROPS	USES**	COMMENTS
	COMMON NAME	BRAND NAME	FORMULATION			
Root disease caused by soil nematodes (continued)	Fensulfothion	Dasanit	15G	Aloe, azalea, bougainvillea, butterfly iris, camellia, century plant, Chinese hibiscus, chrysanthemum, croton, cyclamen, Easter lily, gardenia, gladiolus, gloxinia, rose, ornamental foliage plants	OU	Preplant use. Do not treat peony, begonia, hydrangea, or *Aucuba* spp. because of possible plant injury. Check other crops for plant damage.
	Oxamyl	Vydate L	24L	Azalea, bird's nest fern, chrysanthemum, croton, *Dieffenbachia plicta,* dracaena, gardenia, gladiolus, hindu rope, leatherleaf fern, maranta, peony, peperomia, philodendron, rose, sansevieria, snapdragon	OU	
		Oxamyl G	10G	Allspice, aluminum plant, ardisia, artillery plant, asparagus fern, azalea, bird's nest fern, Boston fern, caladium, carnation, cast iron plant, chrysanthemum, citrus, croton, devilwood, dieffenbachia, dracaena, gardenia, gladiolus, goldfish plant, gypsophila, heart leaf, hibiscus, hoya, iris, ivy, jade plant, leaf philodendron, leatherleaf fern, maranta, medicine plant, nerve plant, palm (neanthe bella and Madagascar), peony, peperomia, philodendron, pink polka-dot, poinsettia, rose, sansevieria, snapdragon, umbrella plant	OU GH	
	Chitin-Protein	Clandosan 618	20G	Annual garden plants, temperate perennial non-food garden herbs, commercial greenhouse crops (including nursery/seed crops/medical crops/tobacco), houseplants, home and retail greenhouse and conservatory plants, public display plantings, bulb, corm, and tuber ornamentals, subtropical/tropical garden evergreen plants, groundcovers, and aquatic plants; ornamental trees, shrubs, and vines; forest tree nurseries, and ornamental brunch grasses	OU GH	Have nematode counts made before and several weeks after treatment.
Leaf blights caused by foliar nematodes	Demeton	Systox	2EC	Chrysanthemum, daffodil, lily, primrose	OU	Do not treat Croft lilies.
	Oxamyl	Vydate L	24L	Begonia	GH	Ohio label (24c).
Botrytis blights, spots, and stem rot	Benomyl	Benlate Tersan 1991	50DF 50DF	Rose, flowers, ornamentals	OU GH	Widespread pathogen resistance is a problem.
	Bordeaux Mixture	Bordeaux Mixture	12.75WP	Dahlia, gladiolus, iris, lily, peony, tulip	OU	Do not apply during cool, damp weather.
	Captan	Captan	50WP	Chrysanthemum, rose	OU	
	Chloro-thalonil	Exotherm Termil	20 Fum	Foliage and blooms of African violet, ageratum, alyssum, aphelandra, azalea, calceolaria, celosia, chrysanthemum, cineraria, cyclamen, dianthus, Easter lily, fuchsia, geranium, gloxinia, hydrangea, lantana, marigold, nasturtium,	GH	Smoke fumigation.

*This list is presented for information only. No endorsement is intended for products mentioned, nor is criticism meant for products not mentioned. Before purchasing and using any fungicide, you must check all labels for registered use, rates and application frequency. It is illegal to use any fungicide/pesticide in a manner inconsistent with the labeling.

**OU = Outdoor Use; GH = Greenhouse Use.

215

DISEASE	CHEMICAL MANAGEMENT			REGISTERED CROPS	USES**	COMMENTS
	COMMON NAME	BRAND NAME	FORMULATION			
Botrytis blights, spots,and stem rot (continued)	Chloro-thalonil (continued)	Exotherm Termil (continued)	20 Fum (continued)	primrose, rose, salvia, scarlet sage, schizanthus, snapdragon, verbena, zinnia		
				Foliage only of aster, balsam, begonia, caladium, carnation, coleus, delphinium, impatiens, lobelia, palm, petunia, poinsettia, porch ivy, variegated hoya, *Vinca rosea*	GH	Smoke fumigation.
		Daconil 2787	75WP 4F	Carnation, chrysanthemum, daisy, dracaena, geranium, gladiolus, hollyhock, hydrangea, iris, leatherleaf fern, lily, parlor palm, petunia, philodendron, prayer plant, oyster plant, rose, statice, syngonium, zinnia	OU GH	
	Cupric hydroxide	Kocide 101	77WP	Azalea, bulbs, carnation, chrysanthemum	OU GH	
	Dicloran	Botran	75WP	Gladiolus, hydrangea, rose	OU	Use prior to storage, shipping.
	Iprodione	Chipco 26019	50WP	Ageratum, alyssum, aphelandra, artemisia, aster, azalea, cactus, calendula, carnation, chrysanthemum, cineraria, coleus, coral bells, crassula, croton, columbine, cyclamen, daffodil, dahlia, delphinium, deutzia, dianthus, dieffenbachia, dizygotheca, dracaena, English ivy, episcia, ficus, gazania, geranium, gladiolus, gloxinia, gypsophila, hoya, hydrangea, impatiens, iris, kalanchoe, lily, lipstick vine, marigold, monarda, palm, pansy, peperomia, periwinkle, philodendron, phlox, pilea, pittosporum, poinsettia, poppy, pothos, primrose, protea, rose, salvia, schefflera, snapdragon, spathiphyllum, statice, tree ivy, tulip, violet, zinnia	OU GH	Pathogen resistance may occur.
	Mancozeb	Dithane M-45, F-45, or DF	80WP 4F 75DF	African violet, begonia, chrysanthemum, dahlia, fuchsia, gladiolus, hydrangea, lily, marigold, narcissus, orchid (Dendrobium), peony, tulip	OU GH	
		Manzate 200	75DF	African violet, *Aglaonema commutatum*, anthurium, areca palm, China aster, azalea, baby's breath, begonia, carnation, Christmas cactus, chrysanthemum, *Crassula argentea*, croton, dahlia, daisy (transvaal), dieffenbachia, dracaena, dusty miller, fern, ficus, fittonia, geranium, gladiolus, gold-dust tree, gypsophila, hollyhock, ivy, lily, Easter lily, Madagascar palm, mahonia, nephthytis, pansy, peperomia, periwinkle, petunia, philodendron, pilea, Norfolk Island pine, pittosporum, poinsettia, primrose, protea, rose, santolina, schefflera, snapdragon, statice, strawflower, velvet plant, Venus flytrap, verbena, yucca, zebra plant, zinnia	OU GH	
	Picro cupric ammonium formate and tannate complex	Phyton 27	5.5EC	Geranium	OU	Cutting dip and growing medium drench.
	Thiophanate-methyl	Cleary's 3336-F	4F 50WP	Rose, flowers, ornamentals	OU GH	Widespread pathogen resistance is a problem.

Continued on next page

DISEASE MANAGEMENT CHART*

DISEASE	CHEMICAL MANAGEMENT			REGISTERED CROPS	USES**	COMMENTS
	COMMON NAME	BRAND NAME	FORMULATION			
Botrytis blights, spots, and stem rot (continued)	Thiophanate-methyl + Mancozeb	Zyban Duosan	75WP	African marigold, aphelandra, aralia, aster, azalea, begonia, brassaia, camellia, carnation, cissus, chrysanthemum, dahlia, dieffenbachia, dracaena, epipremnum, fatsia, geranium, impatiens, kalanchoe, pansy, pellaea, petunia, philodendron, phlox, photinia, pittosporum, poinsettia, rose, snapdragon, spathiphyllum, stocks, verbena, vinca, zinnia	OU GH	
	Vinclozolin	Ornalin	50WP 4F	African violet, alyssum, anthurium, aphelandra, artemisia, aster, azalea, begonia, bleeding heart, calceolaria, camellia, carnation, chrysanthemum, cineraria, coleus, columbine, coral bells, crossandra, croton, cyclamen, daffodil, daisy, dianthus, dieffenbachia, dracaena, Easter lily, episcia, euonymus, euphorbia, fuchsia, gazania, geranium, gerbera, gladiolus, gynura, gypsophila, hoya, hyacinth, hydrangea, impatiens, iris, ivy, kalanchoe, liatris, lily, lupine, marigold, monarda, narcissus, orchid (Dendrobium), palm (areca), pelargonium, peperomia, petunia, philodendron, phlox, pilea, poinsettia, polyscias, primrose, primula, saintpaulia, salvia, saxifraga, schefflera, scindapsus, senecio, sinningia, snapdragon, statice, tulip, violet, zinnia—plant spray Gladiolus, hyacinth, iris, lily, narcissus, scilla, tulip—bulb and corm dip Gladiolus and rose—flower dip Alstroemeria, carnation, chrysanthemum, cornflower, daisy, gypsophila, iris, leptospermum, shasta daisy, statice, sweet william—postproduction spray with the 50WP only	OU GH	Do not spray stressed plants. Some poinsettia cultivars may be sensitive. Flowable labeled for thermal fogger application—follow instructions closely. Pathogen resistance may occur.
Rots caused by other fungi	Benomyl	Benlate Tersan 1991	50DF 50DF	Bulbs (daffodil, Easter lily, iris, tulip), corms (gladiolus)—basal rot *(Fusarium), Penicillium* rots Herbaceous annual, perennials, and bedding plants—*Botrytis, Fusarium* and *Sclerotinia* stem, crown and root rots Woody ornamentals (azalea, poinsettia, rhododendron)-*Cylindrocladium* and *Thielaviopsis* rots	OU GH OU	Bulb dips.
	Captan	Captan	50 WP	Begonia (tuberous) — tuber rot Gladiolus—corm rot and decay	OU	Tuber and corm dip only.
		Orthocide	50WP	Flowers, rose—root rots	GH	Preplant use in growing medium mix.
			5D 7.5D 10D	Flowers, rose—root rots	GH	Preplant use in growing medium mix.
	Dicloran	Botran	75WP	Gladiolus—*Stromatinia* dry rot	OU	Preplant use in growing medium mix.

*This list is presented for information only. No endorsement is intended for products mentioned, nor is criticism meant for products not mentioned. Before purchasing and using any fungicide, you must check all labels for registered use, rates and application frequency. It is illegal to use any pesticide in a manner inconsistent with the labeling.

**OU = Outdoor Use; GH = Greenhouse Use.

217

DISEASE	CHEMICAL MANAGEMENT			REGISTERED CROPS	USES**	COMMENTS
	COMMON NAME	BRAND NAME	FORMULATION			
Rots caused by other fungi (continued)	Etridiazole + Thiophanate-methyl	Banrot	40WP 8G	African violet, ageratum, aglaonema, aralia, ajuga, alyssum, aster, azalea, balsam, begonia, cactus, caladium, calendula, camellia, carnation, celosia, chamaedorea palm, chrysanthemum, coleus, croton, dahlia, delphinium, dieffenbachia, dracaena, dusty miller, Easter lily, epipremnum, euonymus, fatsia, fern, ficus, fittonia, gardenia, geranium, gynura, gypsophila, hoya, hydrangea, impatiens, ivy, kalanchoe, larkspur, lobelia, maranta, marigold, nasturtium, nautilocalyx, pansy, peperomia, petunia, philodendron, phlox, pilea, poinsettia, salvia, schefflera, snapdragon, statice, syngonium, tradescantia, verbena, zinnia, zygocactus—*Thielaviopsis* root rot and—*Fusarium*—root rot	OU GH	
	Iprodione	Chipco 26019	50WP	Spathiphyllum —*Cylindrocladium* root rot; Gladiolus—*Fusarium* corm rot	OU GH	
	Quintozene	Terraclor	75WP	Calendula, larkspur, snapdragon, sweet pea — stem rot *(Sclerotinia)* Gladiolus—neck or bulb dry rot (*Sclerotinia* and *Stromatinia*) Hyacinth, iris (bulbous), narcissus, tulip—black rot (*Sclerotinia*); crown rot (*Sclerotinia*) Iris (Dutch)—bulb and stem rot (*Sclerotinia*); Rose—*Botrytis* storage rot	OU	Preplant use only for field grown crops. Dip prior to storage.
			10G	Calendula, larkspur, snapdragon, sweet pea-stem rot (*Sclerotinia*); Gladiolus-neck or bulb dry rot (*Sclerotinia* and *Stromatinia*); hyacinth, iris (bulbous); narcissus, tulip-black rot (*Sclerotinia*), crown rot (*Sclerotinia*); iris (Dutch)—bulb and stem rot (*Sclerotinia*)	OU	Preplant use only.
	Thiabendazole	Mertect 160	60WP	Bulbs (iris, narcissus, tulip, etc.)—*Fusarium* basal rot and *Penicillium* blue mold; corms (gladiolus, etc.)—*Fusarium* basal rot	OU	Bulb dip only. Corm dip only.
	Thiophanate-methyl	Cleary's 3336-F	4F 50WP	Daffodil, Easter lily, gladiolus, iris, tulip—*Fusarium* and *Penicillium* bulb rot Herbaceous annuals, perennials and bedding plants—*Fusarium* and *Sclerotinia* stem, crown, and root rots Azalea, poinsettia, rhododendron—*Cylindrocladium* rot	OU GH OU GH OU	Bulb treatment. As a drench or preplant cutting dip.
	Vinclozonlin	Ornalin	4F 50WP	Gladiolus, hyacinth, iris, lily, narcissus, scilla, tulip — bulb and corm dip for *Sclerotinia*.	OU GH	
Leaf and flower spots and blights caused by other fungi	Benomyl	Benlate Tersan 1991	50DF 50DF	Azalea, rhododendron-*Ovulinia* and *Sclerotinia* blight; flowers, ornamentals-spots and Anthracnose, *Cercospora*, *Entomosporium*, *Ramularia*, *Septoria* leaf spots, *Ascochyta* and *Phomopsis* blights; iris—*Didymellina* leaf spot; rose—black spot	OU GH	
	Bordeaux Mixture	Bordo-Mix	12.75WP	Camellia, chrysanthemum, dahlia, delphinium, geranium, gladiolus, hollyhock, iris, lily, palm, phlox, tulip—leafspot	OU	Do not apply during cool, damp weather.
	Captan	Captan	50WP 80WP	Azalea, camellia—petal blight Carnation—*Alternaria* leaf spot Chrysanthemum—*Septoria* leaf spot Rose—black spot	OU	
	Chlorothal-onil	Daconil 2787	75WP 4F	Azalea, carnation, chrysanthemum, daisy, dracaena, gladiolus, iris, leatherleaf fern, petunia, philodendron, parlor palm, prayer plant, oyster plant, rose, statice, syngonium—various leaf spots and blights (consult label)	OU GH	

Continued on next page

DISEASE MANAGEMENT CHART*

DISEASE	CHEMICAL MANAGEMENT			REGISTERED CROPS	USES**	COMMENTS
	COMMON NAME	BRAND NAME	FORMULATION			
Leaf and flower spots and blights caused by other fungi (continued)	Cupric hydroxide	Kocide 101	77WP	Aralia—*Cercospora, Alternaria;* azalea—*Cercospora, Phytophthora,* dieback; begonia—Anthracnose; carnations—*Alternaria;* chrysanthemum—*Septoria;* yucca—*Cercospora, Septoria;* rose—black spot	OU GH	
	Ferbam	Carbamate	76WP	Camellia—flower blight, chrysanthemum—*Septoria* leaf spot	OU	
	Folpet	Phaltan	75WP 50WP	Carnation—*Alternaria* leaf spot, chrysanthemum—*Septoria* leaf spot, iris—*Didymellina* leaf spot, marigold—leaf spot, phlox—anthracnose, rose—black spot, zinnia—*Alternaria* leaf spot. Carnation—*Alternaria* leaf spot, chrysanthemum—*Septoria* leaf spot, iris—*Didymellina* leaf spot, marigold—leaf spot, rose—black spot, snapdragon—anthracnose, zinnia—*Alternaria* leaf spot	OU	Two formulations labeled differently.
	Iprodione	Chipco 26019	50WP	Chrysanthemum—ray blight, iris—ink spot, tulip—fire, zinnia—*Alternaria* leaf blight Ageratum, alyssum, aphelandra, artemisia, aster, azalea, cactus, calendula, carnation, chrysanthemum, cineraria, coleus, coral bells, crassula, croton, columbine, cyclamen, daffodil, dahlia, delphinium, deutzia, dianthus, dieffenbachia, dizygotheca, dracaena, English ivy, episcia, ficus, gazania, geranium, gladiolus, gloxinia, gypsophila, hoya, hydrangea, iris, kalanchoe, lily, lipstick vine, marigold, monarda, palm, pansy, peperomia, periwinkle, philodendron, phlox, pilea, pittosporum, poinsettia, poppy, primrose, protea, rose, salvia, schefflera, snapdragon, spathiphyllum, statice, tree ivy, tulip, violet, zinnia — miscellaneous leaf spots	OU GH	
	Mancozeb	Dithane M-45, F-45, or DF	80WP 4F 75DF	Anthurium, camellia, azalea, carnation, chrysanthemum, cordyline, dieffenbachia, dracaena, fatsia, fern, ficus, gladiolus, hollyhock, hydrangea, iris, narcissus, pansy, peony, peperomia, philodendron, pleomele, poinsettia, rose, schefflera, statice, syngonium, Venus flytrap, zinnia—various leaf spots and blights (consult label)	OU GH	
		Manzate 200	75DF	African violet, *Aglaonema commutatum,* anthurium, areca palm, China aster, azalea, baby's breath, begonia, carnation, Christmas cactus, chrysanthemum, *Crassula argentea,* croton, dahlia, daisy (transvaal), dieffenbachia, dracaena, dusty miller, Easter lily, fern, ficus, fittonia, geranium, gladiolus, gold-dust tree, gypsophila, hollyhock, ivy, lily, Madagascar palm, mahonia, nephthytis, pansy, peperomia, periwinkle, petunia, philodendron, pilea, Norfolk Island pine, pittosporum, poinsettia, primrose, protea, rose, santolina, schefflera, snapdragon, statice, strawflower, velvet plant, Venus flytrap, verbena, yucca, zebra plant, zinnia	OU GH	

*This list is presented for information only. No endorsement is intended for products mentioned, nor is criticism meant for products not mentioned. Before purchasing and using any fungicide, you must check all labels for registered use, rates and application frequency. It is illegal to use any pesticide in a manner inconsistent with the labeling.

**OU = Outdoor Use; GH = Greenhouse Use.

DISEASE	CHEMICAL MANAGEMENT			REGISTERED CROPS	USES**	COMMENTS
	COMMON NAME	BRAND NAME	FORMULATION			
Leaf and flower spots and blights caused by other fungi (continued)	Maneb	Dithane M-22	80WP	Carnation—leaf spot; chrysanthemum—*Ascochyta* ray blight; *Septoria* leaf spot; gladiolus—*Curvularia* leaf spot; pansy—anthracnose; rose—black spot; zinnia—leaf blight	OU	
		Dithane M-22 Special	80WP	All of the above plus *Stemphyllium* leaf spot on gladiolus	OU	
	Propiconazole	Banner	14.3EC	Chrysanthemum, roses, sweet william	OU	
	Quintozene	Terraclor	2EC 75WP	Azalea—*Ovulinia* petal blight Camellia—flower blight	OU	
	Thiophanate-methyl	Cleary's 3336	4F 50WP	Azaleas, rhododendron—*Ovulinia* and *Sclerotinia* blight; Flowers, ornamentals—Anthracnose, *Cercospora*, *Entomosporium*, *Ramularia*, and *Septoria* leaf spots, *Ascochyta* and *Phomopsis* bilights; Iris—Didymellina leaf spot; Rose—black spot	OU GH	
	Triadimefon	Strike	50DF	Ageratum, azalea, iris, marigold, nephthytis, phlox, zinnia—various leaf spots	OU GH	Not registered in California on some of the crops listed. See label.
	Vinclozolin	Ornalin	50WP 4F	Snapdragon and zinnia-*Sclerotinia* blight	OU GH	

OFA

Use Rates For Several Fungicides Registered On Floriculture Crops

C.C. Powell, Extension Plant Pathologist, The Ohio State University

COMMON NAME	BRAND NAME(S)	AMOUNT OF FORMULATED PRODUCT TO USE	AMOUNT OF WP MATERIALS TO MAKE ONE OUNCE *	HOW APPLIED**
Benomyl	Benlate 50DF Tersan 1991 50DF	8 ounces to 1 pound per 100 gallons	3 tablespoons + 2.75 teaspoons 3 tablespoons + 2.75 teaspoons	HV,D
Captan	Orthocide 50WP	**Foliar spray:** 2 pounds per 100 gallons **Preplant on growing medium:** 2 pounds per 100 gallons at 15 gallons per 1,000 square feet	3 tablespoons + 1 teaspoon	HV GMS
Chlorothalonil	Daconil 2787 4F Daconil 2787 75WP Daconil 2787 90WDG	2 pints per 100 gallons 1.5 pounds per 100 gallons unless otherwise directed 1.25 pounds per 100 gallons unless directed otherwise	(Liquid) 3 tablespoons + 2.25 teaspoons	HV HV HV
Dinocap	Karathane WD 19.5WP	0.5 pound per 100 gallons	3 tablespoons + 1.5 teaspoons	HV
Etridiazole	Truban 30WP Terrazole 35WP	**Dry growing medium mix:** 1.5 to 3 ounces per cubic yard **Bedding plants:** 4 to 6 ounces per 100 gallons per 800 square feet **Other uses:** 3 to 10 ounces per 100 gallons per 400 square feet	3 tablespoons + 0.25 teaspoon 3 tablespoons + 0.50 teaspoon	I D D
	Truban 5G	5 to 10 ounces per cubic yard 6 to 8 ounces per 1,000 square feet 4 ounces per 100 linear feet	(Granular)	I GMS SD
	Terrazole 5G	10 ounces per cubic yard	(Granular)	I
	Truban 25EC	**Bedding plants:** 3 to 4 ounces per 100 gallons per 800 square feet **Other uses:** 4 to 8 ounces per 100 gallons per 400 square feet	(Liquid)	D D

*One ounce of any liquid product is very close to 30 milliliters or 2 tablespoons.
**HV = High volume spray, GMS = Growing medium surface spray, D = Drench, I = Incorporation

USE RATES FOR FUNGICIDES

COMMON NAME	BRAND NAME(S)	AMOUNT OF FORMULATED PRODUCT TO USE	AMOUNT OF WP MATERIALS TO MAKE ONE OUNCE *	HOW APPLIED**
Etridiazole (continued)	Terrazole 25EC	**Bedding plants:** 0.75 to 1 ounce per 25 gallons per 100 square feet **Other uses:** 1 to 2 ounces per 25 gallons per 100 square feet	(Liquid)	D D
	Terrazole 4E	**Bedding plants:** 0.375 to 0.5 ounce per 25 gallons per 100 square feet **Other uses:** 0.5 to 1 ounce per 25 gallons per 100 square feet	(Liquid)	D D
Etridiazole + Thiophanate-methyl	Banrot 40WP	**Bedding plants:** 4 to 8 ounces per 100 gallons per 800 square feet **Other uses:** 6 to 12 ounces per 100 gallons per 400 square feet	3 tablespoons + 0.25 teaspoon	D D
	Banrot 8G	**Dry growing medium mix for bedding plants:** 8 ounces cubic yard **Bed grown plants:** 16 ounces per cubic yard **Broadcast:** 8 to 12 pounds per 1,000 square feet **Side dress:** 6 ounces per 1,000 linear feet	(Granular)	I GMS
Fenarimol	Rubigan 12.5EC 11.6EC	3 to 12 ounces per 100 gallons 4 to 12 ounces per 100 gallons	(Liquid) (Liquid)	HV HV
Folpet	Phaltan 50WP	2 pounds per 100 gallons	3 tablespoons + 0.75 teaspoon	HV
Fosetyl Al	Aliette 80WP	**Drench:** 0.4 to 0.8 pound per 100 gallons per 400 square feet **Spray on ornamentals:** 2.5 to 5 pounds per 100 gallons per 0.25 acre or less **Spray on bedding plants:** 1.25 to 4 pounds per 100 gallons per 0.25 acre or less	3 tablespoons	HV,D
Iprodione	Chipco 26019, 50WP	**Drench:** 6.5 ounces per 100 gallons **Spray:** 1 to 2 pounds per 100 gallons	6 tablespoons +1 teaspoon	HV,D

Continued on next page

USE RATES FOR FUNGICIDES

COMMON NAME	BRAND NAME(S)	AMOUNT OF FORMULATED PRODUCT TO USE	AMOUNT OF WP MATERIALS TO MAKE ONE OUNCE *	HOW APPLIED**
Metalaxyl	Subdue 2E	0.25 to 2 ounces per 100 gallons	(Liquid)	D
	5G	6 to 24 ounces per 1,000 square feet	(Granular)	GMS
	2G	15 to 125 ounces per 1,000 square feet	(Granular)	GMS,I
Mancozeb	Dithane M-45	1.5 pounds per 100 gallons	3 tablespoons + 0.75 teaspoon	HV
	Manzate 200 DF	1 to 2 pounds per 100 gallons	4.5 to 9 teaspoons	HV
PCAF (Copper)	Phyton 27	13 to 67 ounces per 100 gallons	(Liquid)	HV
Propamocarb	Banol 6E	2 to 3 ounces per 10 gallons at 3 quarts to 2 gallons per 10 square feet	(Liquid)	HV,D
Propiconazole	Banner 14.3EC	5 to 12 ounces per 100 gallons	(Liquid)	HV
Quintozene	Terraclor 75WP	**At seeding or transplanting:** 4 to 8 ounces per 100 gallons per 400 to 800 square feet **Preplant broadcast:** 3.25 to 6.5 pounds per 1,000 square feet	3 tablespoons + 1.5 teaspoons	D
Thiophanate-methyl	Cleary's 3336, 50WP, 4F	10 to 20 ounces per 100 gallons 0.75 pound per 100 gallons	(Liquid)	HV,D HV,D
Thiophanate-methyl + Mancozeb	Zyban 75WP	1.5 pounds per 100 gallons	3 tablespoons + 1 teaspoon	HV
	Duosan 75WP		3 tablespoons + 1 teaspoon	
Triadimefon	Strike, 25DF	2 to 4 ounces per 100 gallons	3 tablespoons + 1 teaspoon	HV
Triforine	Triforine 18.2EC	12 to 18 ounces per 100 gallons	(Liquid)	
Vinclozolin	Ornalin 50WP	0.5 to 1 pound per 100 gallons	6 tablespoons + 0.75 teaspoon	HV
	4F	8 to 16 ounces per 100 gallons	(Liquid)	HV, Fogger

*One ounce of any liquid product is very close to 30 milliliters or 2 tablespoons.
**HV = High volume spray, GMS = Growing medium surface spray, D = Drench, I = Incorporation

OFA

223

Fungicides, Bactericides, And Nematicides Registered For Management Of Fungi, Bacteria, And Nematodes On Certain Floral Crops*

C.C. Powell, Extension Plant Pathologist, The Ohio State University

Many fungicides, bactericides, and nematicides are manufactured and registered for use on ornamental plants grown outside or in the greenhouse. The specific remarks summarized in the following paragraphs are those given on pesticide labels at the time of publication of this article. It is the responsibility of the pesticide user to make certain she or he is following the currently labeled instructions. Labels should be checked before purchase to be certain if the labeled uses (rates and applications methods) are consistent with their practices. The label should also be checked to determine if the plant in question is listed. Refer to the charts on disease control for guidance as to appropriate uses and registered crops.

Banrot

Banrot is a broad spectrum fungicide made up of etridiazole plus thiophanate-methyl. Use for control of root rots caused by *Pythium, Phytophthora, Rhizoctonia, Fusarium,* and *Thielaviopsis.* The material comes as a 40WP for drenching or as an 8G for growing medium incorporation prior to planting, broadcast treatments on growing media, or side dress treatments beside existing plants.

Benomyl (Benlate DF, Tersan 1991 DF)

This systemic fungicide is very effective against many leaf spots, powdery mildews, and *Botrytis.* A good spreader-sticker is necessary for foliar applications. Benomyl is also effective as a growing medium drench for control of *Rhizoctonia* root rot or damping-off on a number of crops. Additionally, Benomyl drenches can be used for control of stem, crown and root rots caused by *Sclerotinia, Fusarium, Botrytis, Cylindrocladium,* and *Thielaviopsis.* Because of its specificity, it generally is combined with other fungicides in a growing medium drench program.

Captan (Orthocide)

This is a broad spectrum fungicide with limited registrations for use on floral crops. It can be used as a preplanting growing medium treatment for prevention of damping-off and root rot diseases. It is also effective on certain foliar diseases.

Chlorothalonil (Daconil 2787, Exotherm Termil)

Daconil 2787 and Exotherm Termil are trade names for chlorothalonil that is good for the control of *Botrytis* and other leaf spotting fungi on many crops. Exotherm Termil is a smoke bomb form of chlorothalonil. Fumigate in the evening and close the doors and vents overnight. Do not enter during fumigation and ventilate two hours before working in the fumigated structure. Daconil 2787 comes as a flowable or wettable powder for spray application onto plants.

Cupric hydroxide (Kocide 101)

This is a "fixed copper" fungicide and bactericide. It has a wide range of activity but is labelled for use on only a few ornamental crops.

Dinocap (Karathane)

This fungicide for powdery mildew control also acts as a miticide. It has good residual activity. It usually is not used on open flowers because of the possibility of burn.

Dodemorph (Milban)

This EC fungicide is currently registered only for powdery mildew control on a few greenhouse grown ornamentals. It is an excellent eradicant and is best used to treat an entire greenhouse area rather than to treat individual plants or pots.

Etridiazole (Truban, Terrazole)

Etridiazole is quite specific for water mold control. Thus, it is often combined with other materials in a growing medium drench program. It is formulated as a 30 or 35% WP, as a 25 or 46.8% EC, and as a 5% granular. Follow the application with an additional water irrigation to improve permeability of the material into the growing medium.

Fensulfothion (Dasanit)

This 15% granular formulation is registered for preplant growing medium mixing to control nematodes on a number of ornamentals. It is toxic, so treated growing medium should be handled carefully when filling pots or transplanting. Do not allow the chemical on plant foliage.

Fenamiphos (Nemacur)

This is a 10% granular pesticide specifically developed for the control of the major types of nematodes that attack the roots of many ornamental plants. It is labeled as a broadcast or in-furrow application. Nemacur should be irrigated in immediately after application. The product is reasonably toxic, so read and follow labeled safety precautions closely.

Fenarimol (Rubigan)

This systemic EC fungicide is very effective for powdery mildew control. It is labeled on greenhouse roses and a few other outdoor grown ornamentals. Do not use in cool, cloudy weather.

Fixed Coppers (Kocide 101, Bordo-Mix, Phyton-27)

Some fixed copper fungicides have been available for many years. They are safe to users and have a broad spectrum of activity.

Continued on next page

Most recommendations call for about four pounds of a 50% copper per 100 gallons. Because there are so many copper fungicides on the market, it would be best to check the label on each before using it. Some of the newer ones are more potent, thus less should be used.

Iprodione (Chipco 26019)
Many field and greenhouse ornamentals can be sprayed for *Botrytis* with this fungicide. There are a few other foliar spray uses on the label as well. As a drench, iprodione can be used at seeding or at transplanting for *Rhizoctonia* control. Be certain to treat only labeled crops.

Mancozeb (Manzate 200DF, Dithane M-45, F-45, or DF)
Use this dithiocarbamate fungicide for leaf spots and blights. It is registered for the control of many leaf spots and blights. It is not a systemic, so thorough crop coverage is important for control.

Metalaxyl (Subdue)
This fungicide is a systemic that is effective for *Pythium* or *Phytophthora* diseases at extremely low rates. Because of possible phytotoxicity problems, use the product at the lower end of the rate ranges given on the label for various crops. Do not apply more frequently than directed on the label. The 2E formulation of metalaxyl should be combined with other materials in a preventive growing medium drench program to broaden the spectrum of pathogens controlled. Granular formulations are registered for broadcast growing medium application.

Oxamyl (Vydate L, Oxamyl G)
This systemic nematicide has a few ornamental crop registrations for root nematodes. It can be used as a foliar spray, preplant growing medium treatment, or growing medium surface application.

PCAF (Picro cupric ammonium formate and tannate complex) (Phyton-27)
This copper-based fungicide is systemic and labeled on a variety of fungal and bacterial diseases as a spray, growing medium drench, and flower dip. Follow use directions closely.

Propamocarb (Banol)
Propamocarb is formulated as an EC. It is labeled as a growing medium drench for control of root and crown rots caused by water molds. Specific use directions are given for treatment at seeding, transplanting of seedlings, transplanting of cuttings, and potting of bare root plants. It can be mixed with benomyl for a broad spectrum growing medium drench.

Propiconazole (Banner)
This EC fungicide is systemic and long lasting. It is labeled for powdery mildews and a few other diseases, but only for a few crops. Using too high a dosage rate could result in stunting of plants.

Quintozene (Terraclor)
Use as a growing medium drench to control some stem and root rotting fungi. Quintozene is not effective against water molds. It should be combined with other materials in a general growing medium drench or incorporation program.

Streptomycin (Agrimycin, Agri-Strep)
This antibiotic is effective for control of many bacterial plant pathogens. Because of the diversity of bacterial diseases, check the label for specific uses. Streptomycin might cause plant damage.

Sulfur (Flotox)
For powdery mildew suppression, flowers of sulfur can be used in electric fumigators in enclosed structures. Sulfur sprays or dusts also may be used. Sulfur leaves a residue and might cause plant injury.

Thiophanate-methyl (Cleary's 3336)
This systemic fungicide is similar in chemistry and activity to benomyl. It is formulated as a flowable or wettable powder.

Triadimefon (Strike)
This systemic fungicide is effective for its labeled uses. It is a long-lasting fungicide. Labeled directions must be followed closely to avoid stunting the growth of plants.

Triforine
This EC fungicide wets foliage well without the need for additional spreader-sticker. Be certain to wear eye protection when using this material.

Vinclozolin (Ornalin)
This fungicide is effective for control of *Botrytis* spp. and *Sclerotinia* spp. on ornamental herbaceous, woody and bulb crops grown in greenhouses and outside. It is labeled only for professional use as a foliar spray and as a bulb, corm, or fresh cut-flower dip. The flowable is also labeled for use in a thermal fogger.

Zyban, Duosan
Zyban and Duosan are trade names of a broad spectrum, systemic contact fungicide consisting of a mixture of 15% thiophanate-methyl and 60% mancozeb. It is labeled only for professional use on many herbaceous and woody ornamentals in greenhouses or fields. A good spreader-sticker is recommended for use on hard-to-wet foliage.

*This list is presented for information only. No endorsement is intended for products mentioned, nor is criticism meant for products not mentioned. Before purchasing and using any pesticide, you must check all labels for registered use, rates and application frequency.

OFA

225

OHIO FLORISTS' ASSOCIATION BULLETIN

GROWTH REGULATOR CHART*

Harry K. Tayama, Extension Floriculturist, Department of Horticulture, The Ohio State University
Stephen A. Carver, Research Associate, Department of Horticulture, The Ohio State University

MATERIAL	CROP	PURPOSE	CONCENTRATION AND METHOD	APPLICATION	REMARKS
Accel N- (phenyl-methyl) -9-(tetra-hydro-2H-pyran-2-yl) -9H purin-6-amine SEE TABLE 1 PAGE 39	Carnation (standard and miniature)	Lateral branching.	500 ppm SPRAY	On young plants, spray the entire plant following a pinch. On older plants, spray a 12 to 18 inch zone of the plants where branching is desired following harvesting.	Use wetting agent. Apply only to cultivars listed on the label. The material is not translocated.
	Rose	Lateral branching.	200 ppm SPRAY	Spray portion of plants where branching is desired. Best results achieved when application made following pruning or harvesting.	Use wetting agent. Apply only to cultivars listed on the label. The material is not translocated.
A-Rest (ancymidol) SEE TABLES 2 AND 3 PAGE 39	Bedding plants (see label list)	Height control.	33 to 132 ppm SPRAY	Apply 2 to 4 weeks after transplanting when roots are well established.	Wide variation in sensitivity of species.
	Chrysanthemum (pot)	Height control.	33 to 66 ppm SPRAY	When shoots or new growth are 2 to 2.5 inches long. Approximately 14 days after pinch. Repeat if necessary 1 to 2 weeks later.	Some cultivars are more sensitive than others.
			0.25 to 0.50 milligram per 6-inch pot DRENCH	When shoots or new growth are 2 to 2.5 inches long. Approximately 14 days after pinch. Second application should not be necessary, unless split-application is used.	Some cultivars more sensitive than others. Very important that entire growing medium mass is uniformly drenched.
	Dahlia (pot)	Height control.	0.5 to 2 milligrams per 6-inch pot DRENCH	Apply no later than two weeks after planting. Shoots approximately one-fourth (0.25) inch.	Some cultivars may not require treatment. Others vary in sensitivity.
	Easter lily 'Ace' 'Nellie White'	Height control.	33 to 66 ppm SPRAY	When plants are 6 to 8 inches tall. If split application is used, then apply second dose 1 to 2 weeks later. (See suggestion on page 39).	Do not spray if buds are visible. Bud injury may occur. 'Palm tree' appearance may also occur.
			0.25 milligram per 6-inch pot DRENCH	When plants are 6 to 8 inches tall. If split application is used then apply second dose 1 to 2 weeks later. (See suggestion on page 39).	Split application is generally recommended. Very important that growing medium mass is uniformly drenched.
	Foliage plants (see label list)	Height control.	33 to 132 ppm SPRAY	Apply 2 to 4 weeks after transplanting when roots are well established.	Wide variation in sensitivity of species. Labeled in Florida for certain species.
	Geranium (seedlings)	Height control, early flowering.	200 ppm SPRAY	Apply when plants have 2 to 4 true leaves. About 2 to 3 weeks after transplanting.	Promotes branching also.

*This list is presented for information only. No endorsement is intended for products mentioned, nor is criticism meant for products not mentioned. Before purchasing and using growth regulators, you must check all labels for registered use, rates and application frequency.

Continued on next page

226

GROWTH REGULATOR CHART*

MATERIAL	CROP	PURPOSE	CONCENTRATION AND METHOD	APPLICATION	REMARKS
A-Rest (ancymidol) (continued)	Gerbera (pot)	Height control.	0.125 to 0.25 milligrams per 6-inch pot SPRAY or DRENCH	Apply 2 to 4 weeks after transplanting when roots are well established. No repeat.	Application may not be needed. Response by cultivars does vary. Trial small group first.
	Poinsettia	Height control.	33 to 66 ppm SPRAY	Apply when shoots or new growths are 2 to 2.5 inches long. Approximately 14 days after pinch. Repeat if necessary 1 to 2 weeks later.	Some cultivars more sensitive than others. Last application October 7 for cool, dark fall or October 23 for bright, warm fall.
			0.25 to 0.50 milligram per 6-inch pot DRENCH	Apply when shoots or new growth are 2 to 2.5 inches long. Approximately 14 days after pinch. Second application should not be necessary unless split application is used. (See suggestion on page 39).	Some cultivars more sensitive than others. Very important that entire growing medium is uniformly moistened. Last application October 7 for cool, dark fall or October 23 for bright, warm fall.
	Tulip (pot)	Height control.	0.125 to 0.500 milligram per 6-inch pot DRENCH	Apply 1 to 2 days after bringing into greenhouse for forcing. Effect greatly reduced if applied after two days.	Response varies with cultivars and flowering period. Proper cooling is necessary.
Atrinal (dikegulac sodium) **SEE TABLE 4 PAGE 40**	Azalea	Lateral branching, reduced shoot elongation.	3,120 to 6,240 ppm SPRAY	Apply to either unpinched shoots 1 to 3 inches long or to pinched shoots within three days after pinching. Repeat applications can be made following same guidelines. Last application should be two weeks before last pinch would normally be made.	Variation among cultivars. Might delay flowering if applied too late. Yellowing and growth stoppage can be expected. See notes in product information. Translocated to shoot tips of sprayed branches only.
	Fifteen other flora crops on label	Lateral branching, reduced shoot elongation.	460 to 4,680 ppm SPRAY	Generally apply within three days after trimming or hand pinching.	Yellow leaves can be expected. Specific use directions given with product. See Table 4 for crops. Translocated to shoot tips of sprayed branches only.
Benzyladenine (BA) (N-6, benzylamino-purine) **SEE TABLE 5 PAGE 40**	Holiday cactus	Increase branching under vegetative conditions.	100 ppm SPRAY	Apply after planting when new growth begins under vegetative conditions. No repeat application under vegetative conditions.	Results vary with cultivars. Trial small group first. Use wetting agent with spray.
		Increase number of buds under reproductive conditions.	100 ppm SPRAY	Apply 10 to 14 days after start of short days or when flower buds just become visible.	Results vary with cultivars. Trial small group first. Use wetting agent with spray.
B-Nine SP (daminozide) **SEE TABLE 6 PAGE 40**	Azalea	Early and enhanced flower formation.	1,500 to 2,500 ppm SPRAY	Apply 4 to 6 weeks after last pinch.	Encourages short day response and early bud formation.

*This list is presented for information only. No endorsement is intended for products mentioned, nor is criticism meant for products not mentioned. Before purchasing and using growth regulators, you must check all labels for registered use, rates and application frequency.

MATERIAL	CROP	PURPOSE	CONCENTRATION AND METHOD	APPLICATION	REMARKS
B-Nine SP (daminozide) (continued)	Bedding plants (see label first)	Height control.	2,500 to 5,000 ppm SPRAY	Apply 2 to 4 weeks after transplanting. May be repeated at 3- to 4-week intervals.	Petunias should be 1.5 to 2 inches diameter. Tomatoes should have 2 to 4 true leaves.
	Chrysanthemum (pot)	Height control.	2,500 to 5,000 ppm SPRAY	When shoots or new growth are 1 to 1.5 inches long. Approximately 10 to 14 days after pinch. Repeat if necessary 1 to 2 weeks later.	Some cultivars are more sensitive than others.
	Chrysanthemum (cut)	Control of neck elongation.	2,500 to 5,000 ppm SPRAY	Apply 4 to 6 weeks prior to bloom and no later than disbud.	Predominantly for flowering plants to reduce stretching of flower neck and to strengthen the neck.
	Foliage plants	Height control, coloration intensity.	2,500 ppm SPRAY	When new growth begins to elongate. Two or more applications may be necessary.	Recommended for the Sun Belt.
	Gardenia	Height control.	5,000 ppm SPRAY	Apply when plants are two-thirds (0.67) of finished size.	
	Gloxinia	Height control.	750 ppm SPRAY	Apply 1 to 2 weeks after transplanting and before plants start to stretch.	Needed under low light conditions conducive to stretch.
	Hydrangea (summer)	Height control.	5,000 to 7,500 ppm SPRAY	Apply four weeks after pinch. Repeat if necessary, but not after early August.	
	Hydrangea	Height control.	5,000 ppm SPRAY	Apply 2 to 3 weeks after forcing begins (4 to 5 leaf stage). Repeat application one week later.	Can apply after flower buds are visible if necessary. Stop treatment at least six weeks before sale (nickel-sized) to avoid reduction in bloom size.
	Kalanchoe	Vegetative height control.	5,000 ppm SPRAY	First apply approximately two weeks after pinching. Use other applications at two-week intervals if necessary while under long days.	May delay flowering 7 to 10 days compared to non-use.
		Flowering "stem" height control.	5,000 ppm SPRAY	First apply 2 to 3 weeks after start of short days. Repeat 2 to 3 weeks later.	Shortens main flowering stem as well as axillary flowering stems.
	Poinsettia	Height control.	2,500 ppm SPRAY	When new growth or shoots are 1.5 to 2 inches long. Subsequent application may be made at 1- to 2-week intervals if needed.	If combined with Cycocel, do not apply after September 30, make only one application, and use B-Nine SP at 2,500 and Cycocel at 1,500 ppm.
Bonzi (paclobutrazol) SEE TABLES 7 and 8 PAGES 40 and 41	Poinsettia	Height control.	8 to 63 ppm SPRAY	When new growth on shoots are 1.5 to 2 inches long.	Thorough and uniform coverage essential when spraying. Rate is night temperature dependent.
			0.125 to 0.25 milligram per 6-inch pot DRENCH	Apply four ounces per 6-inch pot when new growth or shoots are 1.5 to 2 inches long.	

Continued on next page

GROWTH REGULATOR CHART*

MATERIAL	CROP	PURPOSE	CONCENTRATION AND METHOD	APPLICATION	REMARKS
Cycocel (chlormequat, CCC) SEE TABLE 9 PAGE 41	Azalea	Early flower formulation.	2,500 ppm SPRAY	First application 4 to 6 weeks after last pinch. Reapply once, one week later.	Some cultivars are more sensitive than others. May cause chlorosis and flower delay if misapplied.
	Calceolaria	To keep compact appearance. (see remarks)	1,000 ppm SPRAY	Apply when buds are visible. Split application can be made one-half (0.5) rate, two-week interval.	Useful when artificial day length extension is used or at high forcing temperatures.
	Geranium (cutting)	Height control.	1,500 to 2,000 ppm	When new growth or shoots are 1.5 to 2 inches long. Second application may be made two weeks later.	Heavy dosage may cause leaf chlorosis on leaf margins.
	Geranium (seeding)	Height control, early flowering.	1,500 ppm SPRAY	Apply when plants have 2 to 4 true leaves. About 2 to 3 weeks after transplanting. Repeat at 1- to 2-week intervals if needed. Do not apply if bud visible.	Promotes branching and early flowering. May cause chlorosis on leaf margins.
			3,000 to 4,000 ppm DRENCH	Apply when plants have 2 to 4 true leaves. Do not repeat.	
	Poinsettia	Height control.	1,500 ppm SPRAY	When new growth or shoots are 1.5 to 2 inches long. Subsequent applications may be made at 1- to 2-week intervals if needed.	May cause chlorosis on leaf margins which will disappear. Last application October 15, dark, cool fall, or October 22, warm, bright fall.
			3,000 ppm DRENCH	When new growth or shoots are 1.5 to 2 inches long. Second application should not be necessary.	Last application October 15.
Florel (ethephon) SEE TABLE 10 PAGE 41	Bromeliads	Flower induction.	2,500 ppm SPRAY	Apply when plants are 1.5 to 2 years old to induce flowering.	Plants should flower in 2 to 3 months.
	Daffodil (pot)	Height control.	2,000 ppm SPRAY	Apply when leaves or floral stalk is 4 to 5 inches long. Foliage should be dry. If required, use a second application 2 to 3 days later. Do not apply if flower bud is visible!	Concentration and number of applications varies with cultivar and flowering period. Bulbs should have received proper cold treatment for given flowering period. Do not wet foliage for 12 hours after treatment. Apply in a well-ventilated 60 to 65°F greenhouse.
	Geranium (cutting)	Increased branching of stock plants.	500 ppm SPRAY	Apply four weeks apart after establishment of stock plants (only two applications). Stop 4 to 6 weeks prior to major harvest of cuttings.	Encourages development of laterals, reduces leaf size, reduces stem elongation, hastens rooting, and aborts flower spikes.
		Increased branching of potted plants.	500 ppm SPRAY	First application when breaks or new growth is 1.5 to 2 inches long. Maximum two applications. Discontinue six weeks prior to sale.	Encourages development of laterals, reduces leaf size, reduces stem elongation, aborts flower buds.

*This list is presented for information only. No endorsement is intended for products mentioned, nor is criticism meant for products not mentioned. Before purchasing and using growth regulators, you must check all labels for registered use, rates and application frequency.

MATERIAL	CROP	PURPOSE	CONCENTRATION AND METHOD	APPLICATION	REMARKS
Florel (ethephon) (continued)	Hyacinth	Height control, reduced stem topple.	1,000 ppm SPRAY	Apply when leaves or floral stalk are 3 to 4 inches long. Foliage should be dry. No florets should be in color. If required, use a second application two days later.	Concentration and number of applications varies with cultivar and flowering period. Bulbs should have received proper cold treatment for given flowering period. Do not wet foliage for 12 hours after treatment. Apply in a well-ventilated 60 to 65°F greenhouse.
Pro-Gibb (gibberellic acid, GA_3) SEE TABLE 11 PAGE 41	Azalea	Substitution for cold treatment.	250 ppm SPRAY	After three weeks of cold treatment, apply three weekly sprays at begining of forcing period.	Used to substitute or replace three weeks of cold treatment. Use wetting agent in solution.
	Chrysanthemum (pompom)	Flowering "stem" elongation.	20 ppm SPRAY	About four weeks after start of short days. Buds should be visible but apply before laterals start to elongate away from the stem.	Use wetting agent in solution.
	Chrysanthemum (standard)	Stem elongation.	10 ppm SPRAY	Apply two weeks after planting. Apply again two weeks later.	Over treatment may result in very weak stems. Use wetting agent in solution.
	Cyclamen	Hastened flowering.	10 to 25 ppm SPRAY	Apply when buds are size of pinhead in leaf axils. Approximately 10 to 12 leaf stage. Spray crown leaves. Use 10 ppm on F_1 cultivars.	Hastens flowering approximately one month over normal schedule. Weak flower stems formed if applied later than directed.
	Fuchsia	Stem elongation.	250 ppm SPRAY	Apply four sprays at weekly intervals to induce tree forms.	Treated stems will require staking for upright growth. Use wetting agent in solution.
	Geranium	Stem elongation.	250 ppm SPRAY	Apply four sprays at weekly intervals to induce tree forms.	Treated stems will require staking for upright growth. Use wetting agent in solution.
	Hydrangea	Substitution for cold treatment.	5 ppm SPRAY	Apply up to four weekly sprays at the start of forcing to overcome insufficient cooling.	Use with caution. Plants may become leggy. Use wetting agent in solution.
Silver thiosulfate (STS) SEE PAGE 42					

CFA

230

How To Use The Chemical Growth Regulator Chart

A. Select the appropriate chemical growth regulator material for its intended use (consider crop and purpose).

B. Determine whether a spray or drench will be used (method).

C. Calculate the volume of solution needed using the following guidelines:

Sprays

1. Apply one gallon of solution per 200 square feet of growing area

2. Normally applied before plants are at final spacing.

3. $$\text{Number of gallons needed} = \frac{\text{Number of square feet to be treated}}{200}$$

Drenches

1. Follow these general guidelines on drench volume per given size pot:

   1 ounce per 2.25-inch, 3 ounces per 4-inch, 4 ounces per 5-inch, 6 ounces per 6-inch, and 8 ounces per 10-inch.

2. Actual volume to use will vary with pot/size and growing medium. Determine volume needed to result in a thorough moistening without leaching when growing medium is slightly more moist than before a normal irrigation

3. $$\text{Number of gallons needed} = \frac{\text{Number of pots to treat} \times \text{Appropriate ounces per pot}}{128}$$

D. Choose a recommended or desired concentration given in parts per million (ppm). Multiply recommended percentages by 10,000 to determine ppm. Recommendations are sometimes given as dosage in milligrams (mg) active ingredient (a.i.) per plant for a given pot size.

E. Use the tables on pages 39, 40, and 41 to determine the dilution to use to achieve the recommended or desired dosage.

F. Follow guidelines given under **"Application"** and **"Remarks"** sections.

G. **Suggestions** for proper use of growth regulators

1. Many articles and recommendations have been provided for non-registered uses of various growth regulators on crops. It is the responsibility of the applicator to read the labeled uses of the material and use them accordingly. Common sense should always be exercised when using chemical growth regulators.

2. Apply the proper chemical growth regulator to the **proper plant** at the **proper time** and at the **proper application rate.**

3. Before applying any chemical growth regulator, be certain that the plant is well-established with a good root system. Chemical growth regulators are not substitutes for poor culture.

4. Be certain to apply uniformly, either as a foliar spray or by thoroughly soaking the growing medium mass when drenching.

5. If possible, use two split applications of half strength, one week apart, rather than one application at full strength to apply the same amount of active ingredient. This is especially true when using either Cycocel or A-Rest.

OFA

231

GROWTH REGULATOR TABLES

Table 1. Accel concentrations and dilutions Foliar spray.
1.3% a.i.; 13.1 milligrams. a.i. per milliliter.

Concentration	Dilution	
ppm	Ounces per gallons of solution	Milliliters per liters of solution
50	0.66	3.8
100	1.33	7.7
200	2.64	15.4
500	6.66	38.5

Table 2. A-Rest dosages, concentrations, and dilutions Growing medium drench.*
0.0264% a.i.; 0.264 milligram a.i. per milliliter.

Dosage—milligrams per pot at given volume									Concentration	Dilution	
Drench Volume (ounces)	1	2	3	4	5	6	8	10	ppm	Ounces per gallon of solution	Milliliters per liter of solution
	0.020	0.04	0.063	0.08	0.110	0.125	0.17	0.21	0.7	0.35	2.7
	0.040	0.08	0.126	0.17	0.210	0.250	0.34	0.42	1.4	0.68	5.3
	0.075	0.15	0.225	0.30	0.375	0.450	0.60	0.75	2.5	1.30	9.5
	0.150	0.30	0.450	0.60	0.750	0.900	1.20	1.50	5.0	2.50	19.0

*Locate the desired dosage in the column under the appropriate drench volume. Find the corresponding dilution in the dilution columns.

Table 3. A-Rest concentrations and dilution Foliar spray.
0.0264% a.i.; 0.264 milligram a.i. per milliliter.

Concentration	Dilution	
ppm	Ounces per gallon of solution	Milliliters per liter of solution
10	4.9	38
25	12.1	95
33	16.0	125
50	24.2	190
66	32.0	250
100	48.5	380
132	64.0	500
200	97.0	760

232

GROWTH REGULATOR TABLES

Table 4. Atrinal concentrations and dilutions Foliar spray. 18.5% a.i.; 200 milligrams a.i. per milliliter.

Concentration	Dilution*	
ppm	Ounces per gallon of solution	Milliliters per liter of solution
460	0.30	2.3
780	0.50	3.9
940	0.60	4.7
1,180	0.75	5.9
1,560	1.00	7.8
2,040	1.30	10.2
2,340	1.50	11.7
2,500	1.60	12.5
3,120	2.00	15.6
4,680	3.00	23.4
6,240	4.00	31.2

*Recommendation for crops on label is given in ounce per gallon. Registered floral crops include azalea, clerodendrum, English ivy, *Fatshedera lizei*, fuchsia, *Gardenia jasminoides*, grape ivy, hiemalis begonia, ivy geranium, kalanchoe, *Lantana camara*, lipstick vine, *Schefflera arboricola*, shrimp plant, and verbena.

Table 5. Benzyladenine (BA) dilutions to provide a 100 ppm foliar spray.

Dilution for 100 ppm*			
100 milligrams	in	1 liter water	
500 milligrams	in	5 liters water	(1.3 gallons)
1 gram	in	10 liters water	(2.6 gallons)
5 grams	in	50 liters water	(13.2 gallons)
25 grams	in	250 liters water	(66.1 gallons)

*Dilute first in smaller volume of grain alcohol to dissolve BA then use distilled water to provide the rest of volume needed.

Table 6. B-Nine SP or Alar 85 concentrations and dilutions — Foliar spray. 85% a.i.; 850 milligrams a.i. per gram.

Concentration	Dilution		
ppm	Level scoops per gallon of solution*	Ounces per gallon of solution	Grams per liter of solution
750	1 small	0.11	0.88
1,500	1 large	0.23	1.76
2,500	2 large	0.40	2.94
5,000	4 large	0.80	5.88
7,500	6 large	1.20	8.82

*Approximate dosage only. Measuring scoop provided with product has a large and small end. Use weight measurements wherever possible.

Table 7. Bonzi concentrations and dilutions — Foliar spray. 0.4% a.i.; 4.0 milligrams. a.i. per milliliter.

Concentration	Dilution	
ppm	Ounces per gallon of solution	Milliliters per liter of solution
10.00	0.32	2.5
25.00	0.80	6.3
31.25	1.00	7.8
46.90	1.50	11.7
50.00	1.60	12.5
62.50	2.00	15.5
75.00	2.40	18.8
93.75	3.00	23.4
100.00	3.20	25.0

GROWTH REGULATOR TABLES

Table 8. Bonzi concentrations and dilutions — Growing medium drench. 0.4% a.i.; 4.0 milligrams. a.i. per milliliter.

Concentration	Dilution	
Milligram per 6-inch pot	Ounces per gallon of solution	Milliliters per liter of solution
0.125	0.03	0.26
0.188	0.05	0.39
0.250	0.07	0.52

Table 9. Cycocel concentrations and dilutions — Foliar spray or growing medium drench. 11.8% a.i.; 118 milligrams a.i. per milliliter.

Concentration	Dilution	
ppm	Ounces per gallon of solution	Milliliters per liter of solution
1,000	1.1	8.5
1,500*	1.6	12.7
2,000	2.2	17.0
2,500	2.7	21.2
3,000**	3.3	25.4
4,000	4.4	34.0
5,000	5.4	42.4

*Also referred to as 1 to 80
**Also referred to as 1 to 40

Table 10. Florel concentrations and dilutions — Foliar spray.* 3.9% a.i.; 39 milligrams a.i. per milliliter.

Concentration	Dilution	
ppm	Ounces per gallon of solution	Milliliters per liter of solution
500	1.6	13
1,000	3.2	26
1,500	4.8	39
2,000	6.4	52
2,500	8.0	65
3,000	9.6	77

*Use distilled water if results with tap water are questionable. Water buffered above pH 7.0 reduces Florel effectiveness.

Table 11. Pro-Gibb concentrations and dilutions Foliar spray. 4.0% a.i.; 40 milligrams. a.i. per milliliter.

Concentration	Dilution	
ppm	Ounces per 10 gallons of solution	Milliliters per 10 liters of solution
10	0.32	2.6
25	0.80	6.5
50	1.60	13.0
100	3.20	26.0
250	8.00	65.0
500	16.00	130.0
1,000	32.00	260.0

OFA

234

Guidelines For Trial Use Of Silver Thiosulfate Sprays To Reduce Seed Geranium Petal Shattering And Holiday Cactus Flower Drop*

Direct Spray Method

1. Weigh 380 milligrams of silver nitrate and dissolve in one gallon of distilled water.
2. Weigh 2.2 grams sodium thiosulfate (prismatic) and dissolve in a separate gallon of distilled water.
3. Pour the silver nitrate solution slowly into the sodium thiosulfate and stir rapidly to mix.
4. There should be two gallons of final spray solution. Spray 10 milliliters per plant. There should be enough solution to treat 750 plants.
5. **For Seed Geraniums:** Apply when florets just show color. No spreader-sticker is used.
6. **For Holiday Cactus:** Repeat Steps 1 to 3 above, but use 1.52 grams silver nitrate and 8.8 grams sodium thiosulfate instead. Apply at tight bud stage. Use a spreader-sticker.
7. Wear protective clothing and a respirator when applying this solution.

Concentrate Method

1. Weigh 20 grams of (0.75 ounce) silver nitrate and dissolve in one pint of distilled water.
2. Weigh 120 grams (0.50 ounce) of sodium thiosulfate (prismatic) and dissolve in a separate pint of distilled water.
3. Pour the silver nitrate solution slowly into the sodium thiosulfate solution and stir rapidly to mix.
4. This will provide one quart of stock solution.
5. **For Seed Geranium:** Use two teaspoons (0.33 ounce) of this stock solution to one gallon of water for a direct spray solution. Spray 10 milliliters per plant, just as florets show color. This amount of stock solution will prepare 96 gallons of spray, which is enough to treat 36,000 plants.
6. **For Holiday Cactus:** Use two ounces of this stock solution to one gallon of water for a direct spray solution. Spray 10 milliliters per plant at the tight bud stage. This amount of stock solution will prepare 16 gallons of spray which is adequate to treat 6,000 plants.

***NOTE:** Above guidelines were adapted from research at Michigan State University and the University of California. This compound is not a registered use product and, therefore, The Ohio State University, Ohio Cooperative Extension Service cannot recommend its use. Responsibility of its use lies solely with the user.

OFA

Growth Regulator Shelf Life

John C. Peterson, Associate Professor, Department of Horticulture, The Ohio State University

An article by Drs. C.C. Powell and Richard K. Lindquist concerning the shelf life of pesticides (Ohio Florists' Association Bulletin 612, October, 1980) has prompted questions concerning the stability of growth regulator compounds.

In many aspects, growth regulators are similar to pesticides in that most are mixtures of rather complicated organic compounds. Some contain dispersing agents, wetting agents, solubilizers, and other compounds in addition to the active ingredient as do pesticides. Consequently, much of the information, provided by Drs. Powell and Lindquist, applies to growth regulator chemicals as well. Table 1 provides some specifics about the shelf life of some commonly used growth regulator products. Yet, a few generalizations about these products are probably equally as valuable.

Certain manufacturers indicate their products will last indefinitely under proper storage conditions, but an advisable practice to follow is to make use of products within two years. Purchasing a large quantity of product in fear of price increases is generally a false economy. The risk of product degradation is not worth the potential savings.

Proper storage conditions are usually defined as a cool, dry, dark site. Critical temperatures for most products are above 100 to 120°F or below freezing. Stability of the products is usually not assured when temperatures exceed the higher values or fall below freezing.

Maintaining liquid and powdered formulations in tightly sealed containers is strongly advised. It is very important that powdered products be kept dry. One product worth specific mention is SADH (B-Nine SP). It seems that SADH begins to deteriorate within 24 hours once mixed with water. In fact, liquid formulations of SADH are no longer manufactured. In the past, it was recommended that growers prepare a 5% stock solution using the 85% soluble powder, then prepare solutions for application from this stock solution. This method may make preparing solutions an easier task, but representatives from Uniroyal strongly advise against this practice. They recommend SADH should only be mixed with water just prior to its use.

Storage of growth regulators in a dark place is also advisable. Prolonged exposure to sunlight might result in photodegradation of the active ingredient of some products.

Once solutions are prepared, they should be used immediately. Saving excess solution prepared for application is not advisable for any of the various growth regulators, even if it is just overnight. Accurate calculations to determine the volume of solution needed to treat a crop are important from both a financial and ecological standpoint.

A few comments are appropriate concerning problems associated with the use of growth regulator products. All too often, when a grower encounters a problem such as crop damage or when a product does not seem to be effective, attention is immediately focused upon the growth regulator product. The first concern is something must be wrong with the formulation or the product must have gone bad.

In reality, this should be the last concern, since more often than not, the problem is caused by an error in mixing or method of application. Chemical companies that produce these growth regulators have stringent quality control standards. Product batches are usually tested prior to distribution and retested over a long period of time, often two years or more, to ensure product quality and stability.

Something important to also consider when a product does not seem to be working is the influence of environmental factors. Often, a product used for height control will have less of a perceivable effect when applied to rapidly growing plants as compared to applications to slowly growing plants.

In summary, shelf life should not be a concern if growth regulator chemicals are stored in a cool, dry dark place, kept in a tightly sealed container, and used within two years. If mixing and application procedures are followed as described on the product label or in university publications, and if some consideration is given to the influences of prevailing environmental conditions, then chemical growth regulators should continue to be a useful cultural tool for flower and foliage plant growers.

Please see table on next page

Table 1. Shelf life of selected growth regulators.

GROWTH REGULATOR	SHELF LIFE	COMMENTS
Ancymidol (A-Rest) 0.0264% liquid	At least three years	Short-term elevated temperature (120°F) tests showed no instability problems with active ingredient.
Chlormequat (Cycocel) 11.8% liquid concentrate	At least two years	If stored under normal conditions, shelf life can be longer, but manufacturer only monitors effectiveness for two years.
Dikegulac Sodium (Atrinal) 18.5% liquid concentrate	Indefinitely	Quite stable under temperatures of 100 to 120°F.
Ethephon (Florel) 3.9% liquid concentrate	Indefinitely	Under normal care and handling (temperatures less than 100 to 120°F) good indefinitely.
Gibberellic Acid (Pro-Gibb) 3.91% liquid concentrate	At least two years	Keep container sealed tightly, active ingredient begins to degrade when mixed with water. Use immediately after mixing.
SADH (B-Nine SP) 85% soluble powder	At least two years	Keep dry and tightly sealed in container, since product is hygroscopic (absorbs moisture from air). Use mixed solutions as soon as possible, as they begin degrading within 24 hours.

OFA

OHIO FLORISTS' ASSOCIATION BULLETIN

WEED CONTROL CHART

Harry K. Tayama, Extension Floriculturist, Department of Horticulture, The Ohio State University
Stephen A. Carver, Research Associate, Department of Horticulture, The Ohio State University

COMMON NAME	BRAND NAME	FORMULATION	AMOUNT TO USE*	REGISTERED USE/WEEDS CONTROLLED
Glyphosate	Roundup	Liquid 41% a.i. (4 pounds per gallon)	Hand-held (high volume) spray 1.3 to 2.7 ounces per gallon of water SPRAY	This product may be used to control weeds listed below which are growing in greenhouses. Desirable vegetation must not be present during application and air circulation fans must be turned off ANNUALS—Foxtails, barnyardgrass, downy brome, blue mustard, tansy mustard, tumble mustard, wild mustard, barley, rye, field sandbur, shattercane, stinkgrass, wheat, morningglory, bulbous bluegrass, cheat, mouseear chickweed, corn, common groundsel, horseweed, field pennycress (fanweed), London rocket, Italian ryegrass, shepherd's purse, buttercup, cocklebur, crabgrass, dwarf dandelion, smallseed falseflax, Carolina foxtail, common lamb's-quarter, wild oats, fall panicum, Texas panicum, redroot pigweed, smooth pigweed, witchgrass, broadleaf signalgrass, teaweed, Carolina geranium, goosegrass, cutleaf evening primrose, Florida pusley, sicklepod, Spanishneedles, filaree, balsamapple, fivehook bassia, brome, fiddleneck, flaxleaf fleabane, fleabane, kochia, prickly lettuce, panicums, common ragweed, giant ragweed, Pennsylvania smartweed, annual sow-thistle, sunflower, Russian thistle, velvet-leaf, annual bluegrass, jagged chickweed. PERENNIALS—Alfalfa, alligatorweed, Jerusalem artichoke, bahiagrass, Bermudagrass, field bindweed, Kentucky bluegrass, Texas blueweed, brackenfern, smooth bromegrass, reed canarygrass, cattail, red clover, white clover, dallisgrass, dandelion, curly dock, hemp dogbane, fescues, tall fescue, guineagrass, horsenettle, milkweed, wirestem muhly, common mullein, napiergrass, silverleaf nightshade, purple nutsedge, yellow nutsedge, orchardgrass, paragrass, phragmites, quackgrass, perennial ryegrass, timothy, torpedograss, vaseygrass, water primrose, western wheatgrass, woolyleaf bursage, horseradish, Johnsongrass, kikuyugrass, knapweed, lantana, swamp smartweed, wild sweet potato, Canada thistle
Oryzalin	Surflan	Flowable 40.4% a.i. (4 pounds per gallon)	0.5 ounce per gallon of water SPRAY	This product may be used in drainage areas under greenhouse benches. Little barley, barnyardgrass, annual bluegrass, signalgrass *Brachiaria*, large crabgrass, smooth crabgrass, crowfootgrass, southwestern cupgrass, foxtails, goosegrass, Johnsongrass, junglerice, Mexican lovegrass, orcutt lovegrass, wild oat, browntop panicum, Texas panicum (buffalograss, Coloradograss), Italian ryegrass, field sandbur, red sprangle top, witchgrass, bitter-cress, carpetweed, common chickweed, coast fiddleneck, redstem filaree, whitestem filaree, common grounsel, henbit, prostrate knotweed, lamb's-quarter, pigweeds, puncturevine, common pusley, London rocket, desert rockpurslane, shepherd's purse, prostrate spurge, yellow woodsorrel. NOTE: Surflan will not control established weeds.
Diquat	Diquat	Liquid 35% a.i. (2 pounds per gallon)	4 teaspoons per gallon of water SPRAY	This material is labeled for use beneath greenhouse benches. General brush killer.

*This list is presented for information only. No endorsement is intended for products mentioned, nor is criticism meant for products not mentioned. Before purchasing and using herbicides, you must check all labels for registered use, rates and application frequency.

OFA

OHIO FLORISTS' ASSOCIATION BULLETIN

ALGAE CONTROL CHART

Harry K. Tayama, Extension Floriculturist, Department of Horticulture, The Ohio State Univeristy
Stephen A. Carver, Research Associate, Department of Horticulture, The Ohio State University

COMMON NAME	BRAND NAME	FORMULATION	AMOUNT TO USE*	REGISTERED USE/WEEDS CONTROLLED
Bromo-chloro-dimethyl-imidazolidinedione	Agribrom	Soluble granule	7 to 10 ppm	Can be used on cooling pads, subirrigation mats, floors, ebb and flow benches, irrigation water. Not phytotoxic.
Quanternary ammonium chloride salt	Physan 20	20L	One teaspoon per gallon of water One tablespoon per gallon water	Greenhouse glass. Walks.

*This list is presented for information only. No endorsement is intended for products mentioned, nor is criticism meant for products not mentioned. Before purchasing and using algaecide, you must check all labels for registered use, rates and application frequency.

OFA

Pesticide Application Techniques For Disease And Insect Management

Richard K. Lindquist, Extension Entomologist, The Ohio State University
C.C. Powell, Extension Plant Pathologist, The Ohio State University

Disease and insect pest management is a systems problem that must utilize many different components. The use of pesticides (including fungicides, insecticides, and acaricides) is an important part of most pest management programs on ornamental plants. Proper pesticide application is the basis of effective use. The purpose of this article is to discuss the major aspects of pesticide application and provide information for selecting the best application equipment.

THE OBJECTIVES OF PESTICIDE APPLICATION

The primary objective of any pesticide application task is delivering the material to a target in sufficient concentration to control the pest or pathogen involved. Naturally, there are applicator, environmental and plant safety, as well as economic factors to consider. The target may be an entire plant, specific area on the plant, growing medium, or the pest itself, be it pathogen, insect, or mite.

Defining the target is an important aspect of proper pesticide application. Is the objective to hit airborne pests? Is it to hit pests on or in between leaf surfaces? Are the pests on all plant parts or only in certain areas? Are the pests in the growing medium or under benches?

The type of pesticide applied and its mode of action are crucial to the success or failure of any application. Does the pesticide have vapor or systemic activity? If so, it will **redistribute** from its point of deposition and reach other areas. Many fungicides are "protective;" i.e. they prevent a pathogen from becoming established. Protectives can be either systemic, topical (local application), or operate with vapor activity. Most insecticides are "eradicative;" i.e. they eradicate a pest that happens to be present, but do not prevent future infestations. They may have vapor activity or be strict topical or contact products.

Regardless of the product being used, pesticide application is a two-step process: a process of deposition and distribution. Deposition is the process of laying down the pesticide on the target. Distribution is the process of getting the material to the correct area in amounts required to be effective. Some application devices, such as wet-down hydraulic sprayers, distribute and deposit pesticides in one operation. Others, such as foggers, mainly serve to distribute the pesticide. It is up to the applicator to determine if the fog distributed into a greenhouse actually deposits itself on the target in many cases!

Spray droplet size is important in determining what kind of deposition and distribution will result with any application. Table 1 shows the number of spray drops of different sizes that can be produced from one liter. It is easy to determine that small droplets will potentially increase coverage. A number of studies have shown that with certain insecticides, if distributed properly, large numbers of small droplets produced by these applicators cause higher insect mortality than fewer, larger droplets produced by high-volume (HV) applications. This allows for applying these pesticides in lower amounts and still obtaining good control. With fungicides, the relationship between droplet size and effectiveness is not always clear.

Droplet size may also determine the deposition effectiveness against certain targets. According to early research (Table 2), very small aerosol-sized droplets, less than 50 microns in diameter, generally are best at hitting small insects and mites. Mid-sized

Table 1. Theoretical spray coverage, in droplets per square centimeter, applying one liter/hectare or one ounce per 6,725 square feet with different sizes of droplets.*

Droplet diameter (microns)	Number of droplets per square centimeter	Number of droplets per square inch
10	19,099	2,961
20	2,387	370
50	153	24
100	19	2.9
200	2.4	0.37
400	0.3	0.05
1,000	0.02	0.003

*Matthews, 1979.

Table 2. Best spray drop sizes for different targets.*

Target	Droplet size (microns)
Flying insects	10 to 50
Insects on foliage	30 to 50
Foliage	40 to 100
Growing medium (+ avoiding spray drift)	250 to 500

*Matthews, 1979.

Continued on next page

droplets, from 50 to 100 microns in diameter, are best at foliage deposition. The largest droplets, above 200 microns in diameter, are best for sprays directed at the growing medium surface. In contrast to this information, some of our recent research results have shown that very small droplets, such as those produced by some of the low-volume (LV) equipment described below, also can effectively deposit on leaf surfaces in sufficient amounts to prevent pathogens from becoming established on foliage. Residues in many of our experiments were sometimes equal to those obtained with HV applications that were made up of much larger droplets. Other factors are combined with droplet size. These include foliage canopy thickness, plant height, bed, floor or bench-grown plants, and equipment characteristics.

HIGH-VOLUME SPRAYS

High-volume (HV) sprays are the most traditional ways of applying pesticides in greenhouse and outdoor ornamental crop production. Equipment and methods have not changed much over the years. Equipment used includes small hand-held pump sprayers, larger backpack sprayers, and still larger power sprayers. These applications involve mixing a certain quantity of pesticide with a large volume of water and spraying plants or growing medium to some point of wetness. Water is used in two ways: to dilute the pesticide concentrate, and as a carrier to deliver the material to the target.

Based on droplet size and target objectives in Table 2, only about 2 to 6% of the pesticide applied in HV sprays actually reaches its intended target, with the remaining material being lost through evaporation, drift, or run-off. HV spray inefficiency in this case probably is related to spray droplet size. Most of the volume in HV sprays consists of large droplets (> 100 to 400 microns diameter). However, there are also significant numbers of very small droplets generated (5 to 10 microns in diameter). The large droplets may fall off the target, whereas many of the small droplets evaporate or drift away from the target.

Incorrect dosage is another reason for HV spray inefficiency. It is obvious that the correct amount of pesticide needs to be applied for best results. However, determining that amount may be more complicated than it appears. The usual label on pesticides used on greenhouse crops states that the product should be mixed in water (typically 100 gallons) and "sprayed to run-off." These directions are generally given without regard to spray volume/crop area, and have different meanings to different applicators. A change in labeling on new and re-registered products often involves specifying a certain amount of active ingredient and/or spray gallonage for an area of crop. This should reduce dosage problems.

In our opinion, HV, "wet" sprays remain the best general-purpose way of applying pesticides. This application method is time-consuming, often inefficient, wasteful, environmentally undesirable, and creates re-entry problems. However, HV equipment is widely available, relatively inexpensive, and remains the only legal way to apply most pesticides. Pesticide labels for ornamental plant uses are written to prevent using materials at the higher concentrations required by the LV sprayers, even though less total pesticide may be applied in such LV sprays.

In greenhouses, most applications are made manually, so distribution and deposition will vary with the person making the application. With proper application techniques (high pressure, getting close to plants, moving the spray nozzle in an arc, etc.) foliage canopy penetration and leaf surface coverage are quite good and uniform with high volume sprays. Therefore, the increased time to make applications is compensated for by good deposition and distribution of the pesticide.

LOW-VOLUME APPLICATIONS

Low-volume (LV) applications utilize specialized equipment, including thermal pulse-jet foggers, mechanical aerosol generators, rotary mist generators, and electrostatic sprayers. They are designed to eliminate many of the disadvantages of conventional HV applications. They take less time, use less water or oil to dilute and carry the pesticide (no run-off or crop wetting, faster re-entry), might use less pesticide, and produce most of the spray volume in small droplets. As mentioned, small droplets are potentially more efficient at delivering the pesticide to the target.

LV applications are not new. Various types of specialized equipment have been in use for decades. The following summarizes some of the advantages and limitations of using certain types of presently-available equipment.

THERMAL PULSE-JET FOGGERS

These applicators have been in use for more than 30 years. Originally, these devices were used to apply fumigants in enclosed spaces such as greenhouses. As may be expected, they are very effective, given the proper vapor-active pesticide. However, thermal foggers are also effective at applying residual pesticides, often depositing as much pesticide as with an HV application. Most foggers will disperse both liquid or wettable powder formulations. A carrier or dispersal agent to be mixed with or used in place of water may be specified by the manufacturer.

Foggers generate very small particles, usually from 10 to 50 microns in diameter, that are able to move rather long distances from the applicator. With some of the larger units available, the droplets will travel more than 200 feet. Liquid flow rates also vary with unit size. For example, a small "Pulsfog" model will disperse 10 liters (1.25 gallons) in 30 minutes, while the largest model will disperse 20 liters (2.5 gallons) in 30 minutes. The area covered with these spray volumes will depend on whether a wettable powder or liquid formulation is applied. Two and one-half gallons will cover about 50,000 square feet with a wettable powder. Coverage of 76,000 square feet can be achieved with a liquid formulation. Obviously, foggers are not used to apply pesticides to small areas in spot

treatments. They are designed to treat large areas quickly.

When using these devices to apply residual pesticides, especially wettable powder formulations, we have found that it is very important to use the proper application technique of aiming the spray over the crop at a 30 degree angle. If this is not done, there will be heavy deposition in areas immediately in front of the fogger, causing excessive dosage and plant injury.

Sometimes the distribution of the pesticide within the plant canopy and on undersides of leaves is poor. Thus, using thermal pulse-jet applicators with certain pesticide/pest combinations will not be successful. Using a pesticide that redistributes after application through systemic or vapor action can be very effective.

ROTARY MIST APPLICATORS

Originally called controlled droplet applicators, rotary atomizers have been quite useful in many situations. They are not widely available for use in greenhouses in the United States, but are used outdoors for such diverse purposes as mosquito and weed control. The type of applicator most widely used in greenhouses worldwide is the "Turbair System." These are portable sprayers which disperse pesticides by directing the flow onto rapidly rotating discs. This causes the liquid to break up into small droplets, 10 to 60 microns in diameter. A fan behind the discs propels the spray toward the target, creating a turbulent air stream. Depending on the crop to be treated, from 0.25 to 1 gallon are dispersed per acre. As with amount of liquid dispersed, the time to treat a given area will vary.

These applicators are aimed ahead about 10 feet, with a walking speed of one pace per second. The spray must be directed at the crop and moved up and down or back and forth to ensure proper coverage. Pesticide deposition and distribution is quite good, but foliage canopy penetration and coverage of leaf undersides will vary significantly, depending on the crop type. These devices are not space sprayers, and must be aimed at the crop for best results.

Most of the pesticides applied in Turbair applicators are specially formulated for use in this machine only. Only one pesticide, Rotospray Resmethrin, is registered for use with this equipment in the United States. Some growers have had success with their own mixtures, however, such use is prone to damage crops and is **illegal!**

MECHANICAL AEROSOL GENERATORS

There are several examples of this applicator type available. Some are called "cold" foggers or ventilator ultra low-volume (ULV) applicators. We have been working with a machine called the "Armitsu Greenhouse Sprayer." This device uses air pressure, supplied by an air compressor, to break up the spray liquid into small drops. The volume median diameter of droplets 3 and 12 feet from the nozzle was 13.6 microns and 14.3 microns, respectively. Air also is the main method of moving the spray around the greenhouse and onto the foliage. Much of the spray movement is accomplished by the greenhouse air movement systems, e.g. horizontal air flow or overhead convection tubes. The machine we evaluated will treat an area of more than 15,000 square feet, using less than two gallons of liquid. The spray mixture can be placed in the tank, and the application set to take place when no people are present. Ventilation can then be done before any workers re-enter the greenhouse.

Our results, using fluorescent tracer material as well as non-systemic insecticides, have shown excellent redistribution. Although tracer studies indicated that deposition on upper leaf surfaces was much higher than on undersides for control of greenhouse whitefly larvae on poinsettia with bifenthrin (Talstar, Capture). Similar results have been obtained against two-spotted spider mites and melon aphids.

ELECTROSTATIC APPLICATORS

Using electrical charging of spray droplets to achieve better coverage of lower leaf surfaces and reducing spray drift is an idea that was introduced many years ago. We have evaluated three types of electrostatic LV applicators. In general, the theory behind these devices has been better than results in practice in actual greenhouse experiments. One model, the "Electrodyn," used specialized formulations that could be properly charged by the electrode on the unit. The spray was applied by gravity, without any air movement. Results of bioassays showed that good coverage and deposition was obtained on all plant surfaces on apical foliage, but that penetration into plant canopies was poor.

Another type, the "APE-80," uses a rotating disc to disperse charged droplets. The advantage of this unit over the Electrodyn was that no special formulations were necessary. However, as with the Electrodyn, there was poor foliage canopy penetration.

Recently, air-assisted electrostatic sprayers have become available. Two such sprayers, the "ESS" and "Parspray 707," are being sold in the United States. We have evaluated both models, and have found them to be significantly more effective than those without air assistance. In fact, the air-assistance might be just as important as electrical charging in many cases. Both the ESS and 707 produce droplets with a volume median diameter of about 31 microns. The ESS applied a total spray volume of 15 gallons per acre, while the 707 applied about four gallons per acre.

There often was a "plant position" effect with both devices; i.e. pest control sometimes was better on plants nearest the sprayer nozzle. This effect varied with the pesticide and sprayer, but was more obvious with the 707 sprayer. More even distribution and pest mortality were obtained by making applications from both sides of the greenhouse bench.

Because applications were made from both sides of the greenhouse bench, the time required to make an application in our experiments exceeded that for HV sprays to the

Continued on next page

same area. However, because the foliage is not wetted by the ULV sprays, re-entry can occur promptly after adequately ventilating the greenhouse. Also if less pesticide needs to be used and the residue is effectively on the target, the extra time the application requires would not be costly.

THE FUTURE OF LOW-VOLUME APPLICATION

The basic facts are that the technology of pesticide application is well ahead of legality. As mentioned above, any application method not prohibited on the label can be employed to apply that pesticide. However, a specific dilution (e.g. one pound per 100 gallons) must also be followed when given on a label. Since most, if not all, of the products registered for use on greenhouse crops list specific dilutions for HV sprayers, this effectively prevents LV applications. These LV applications must be made at very high concentrations in order to be effective. Generally, concentrations are 10 to 25 times greater than HV sprays. In order to get pesticide companies to change their labels to allow for LV application, data on applicator exposure, off-target drift, plant safety, etc. are necessary. These studies are expensive, and obtaining sufficient funding to adequately research them certainly will be a problem.

Literature Cited: Matthews, G.A. 1979. Pesticide Application Methods. Longman. London & New York. 33.

OFA

283

Avoid Mistakes By Using Pesticide Use Reports

C.C. Powell, Extension Plant Pathologist, The Ohio State University

Every time I view a crop or planting that has been damaged by a pesticide, I am saddened to realize that a bit more attention to detail would probably have prevented the incident. Keeping good records is the best way to prevent mistakes. It is also a pretty good way to improve your chemical control knowledge and skills. Having to write down application techniques, dosages, materials used, etc. serves to emphasize their equal importance. Noting the effects of your actions can help you improve methods or evaluate the need for changes.

PESTICIDE USE REPORT

Please fill out this report each time a pesticide is applied *anywhere;* on plants, under benches, fumigants, baits, etc.

DATE OF APPLICATION: _____ TIME OF APPLICATION: _____

CONDITIONS: LIGHT: _____ TEMP: _____ WIND: _____

OTHER: _____

REASON FOR APPLICATION: _____

PESTICIDES USED: _____
(If more than one, list in order of tank mixing)

RECOMMENDED RATE: _____ RATE USED: Amount: _____ Gallons of water: _____

METHODS OF APPLICATION: (Mist blower, hydraulic sprayer, etc.) _____

AREA APPLIED TO: (Field #, house #, bench #. Note any plants not sprayed)

_____

_____

SIZE OF AREA (square feet or acres): _____

TOTAL GALLONS OR LITERS APPLIED: _____ TOTAL AMOUNT OF PESTICIDE: _____

RESULTS OF THIS APPLICATION: (record results several days after application),

Date: _____ Observation of pest control: _____

Observation of any damage observed: _____

_____

YOUR NAME: _____

COMMENTS:

PLEASE USE THIS AREA AND BACK OF THIS SHEET TO DO ALL CALCULATIONS FOR THIS APPLICATION.

OFA

A Nomograph For Calibrating Hand-Held Sprayers

C.C. Powell, Extension Plant Pathologist, The Ohio State University

The purpose of using the nomograph is to determine if the proper amount of chemical is being applied over a given area. Determining whether the proper amount of chemical is being applied to plants might appear to be an easy process when following "spray to run-off" directions. However, what exactly does "spray to run-off" mean?

Although more data are needed, a proper "spray to run-off" would be to use from 150 to 300 gallons of spray per acre of crop. Of course, this depends on the size, spacing, and foliage density of the crop being sprayed. The nomograph will aid in determining whether the technique of spraying used is attaining a reasonable range. (Remember, for conversion to square feet, one acre consists of approximately 43,000 square feet.)

The directions for using the nomograph are as follows:

1. Mark off a given area such as 100 square feet.
2. Fill the sprayer tank half full with water plus any adjuvant or spreader being used and operate at the proper pressure until the desired spray pattern is obtained.
3. Determine sprayer delivery rate in ounces per minute by spraying into a container and measuring the spray volume delivered in one minute.
4. On the nomograph, draw a straight line from the desired application rate per acre to the sprayer delivery rate in ounces per minute.
5. Draw a second straight line from the size of the practice area on the left hand scale through the point of intersection of the first line and the "turning line" until the second straight line intersects the right hand scale. This will indicate the time it should take to spray the practice area.
6. Spray the practice area in the correct amount of time and obtain a sense for how fast one should be progressing with the sprayer.

The nomograph can be used in a reverse manner to calibrate a dosage per acre. Determine how long it required to spray a measured area. Then determine the nozzle capacity in ounces per minute and calculate how many gallons per acre the dosage rate was! By knowing the values for any three sides of the nomograph, the fourth can be solved by drawing two straight lines. Thus, the nomograph can be used to check from one application to the next to make certain that there was a reasonable degree of consistency. Such a check could be valuable when a new employee is undertaking a spray responsibility for the first time.

OFA

Nomograph For Calibrating Hand Sprayers

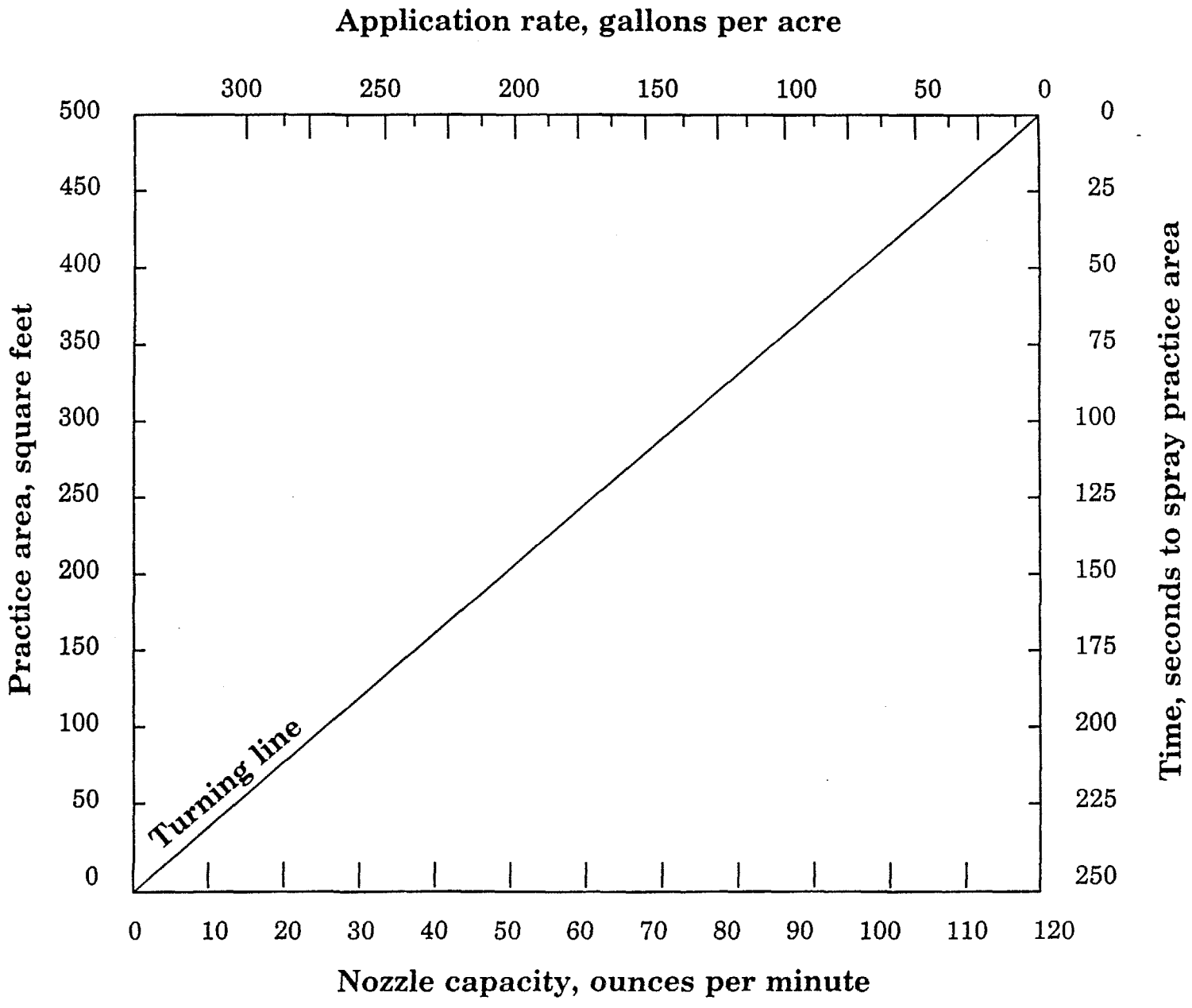

27 Basic Tips For Increasing Pesticide Efficiency On Greenhouse Crops

Richard K. Lindquist, Extension Entomologist, The Ohio State University
C.C. Powell, Extension Plant Pathologist, The Ohio State University

1. Early detection and correct diagnosis is absolutely necessary and can be achieved by regular crop inspections.

2. Check labels of selected products carefully to make certain they are in fact registered and effective against the problem in question.

3. Know something about the cycle of the disease or the pest in question so if there is a need for a follow-up application, a waiting period is allotted.

4. Apply pesticides early in the morning or on a cloudy day to reduce evaporation and the chances of phytotoxicity.

5. Apply pesticides only after crops are properly irrigated and are not showing signs of moisture stress.

6. Drenches should be applied to thoroughly wet the entire rooting media.

7. Do not apply growing medium drenches at higher than recommended dilution rates, then follow up with various kinds of irrigation programs to attempt to "push" the pesticide through the growing medium and root mass.

8. Do not apply pesticides as growing medium drenches at lower than recommended rates in a "constant kill" program with each irrigation.

9. High volume spraying with good coverage of all foliage will require 150 to 300 gallons of spray per acre for most greenhouse crops. Remember coverage of lower leaf surfaces is necessary for control of many pests and diseases.

10. When spraying low ground crops, such as bedding plants in flats on the ground, be careful to avoid drenching the growing medium with pesticides not intended or safe for use around plant roots.

11. Split applications at one-half strength may work for growth regulators, but will not work for insecticides or fungicides!

12. For tank mixes, mix chemicals properly by diluting separately in separate containers, filling the spray tank half full with water, adding the first chemical, adding more water to spray tank, adding the second chemical and then adding spreader-sticker last into the diluted spray mixture.

13. Never use more than one emulsifiable concentrate in a tank mix.

14. Do not use an emulsifiable concentrate if it fails to form a "milky" emulsion in water. Do not use a wettable powder if it fails to break up and suspend properly in water.

15. If water has a pH above 7.0 and contains more than 12 grains (205 ppm) of hardness, an acidifying spray additive used with spray suspensions should be considered.

16. Do not apply pesticides with a fertilizer.

17. Read labels closely to find out which tank mixes may be troublesome, and whether spray adjuvants are or are not recommended.

18. Use a spreader-sticker only if it is not prohibited by the label and only if poor or uneven coverage of plant surfaces has been observed.

19. Add a small amount of spreader-sticker (1 or 2 ounces per 100 gallons) first and then increase only if it is necessary.

20. Never add more than 8 ounces of spreader-sticker to any 100 gallon tank mix to be used on a greenhouse crop.

21. Alternate pesticide families to avoid resistance buildup for insects, mites, and diseases.

22. Remember a healthy, stress-free crop will be more resistant to the infection or infestation of diseases and pests.

23. Keep detailed crop spraying records, which include such things as weather conditions, crop maturity stage, gallons used per area, rates, tank mixes, etc. (See form on page 51) Be certain to record the name of the person doing the application, the time of day, and duration of the job.

24. Keep a recipe book referenced by pest or disease as well as by crop to properly document successful tank mixes and methods.

25. Do not store dilute spray mixtures. Prepare only the amount of spray that will be used in one application.

26. Get a copy of the 1986 edition of Bulletin 538, "Commercial Floral and Foliage Crops: Insect, Mite and Disease Control," from The Ohio State University, Cooperative Extension Service. For non-Ohio residents, the cost is $3.50 plus $1.25 postage. The address is Publications Office, 258 Kottman Hall, 2021 Coffey Road, Columbus, OH 43210 USA. Make check ($5.75) payable to The Ohio State University. For Ohio residents, contact your County Agricultural Extension Office.

27. Never say never!

ORA

Integrated Insect And Mite Management Programs On Floral And Foliage Crops

Richard K. Lindquist, Extension Entomologist, The Ohio State University

Integrated pest management (IPM) means employing as many methods as possible to minimize problems caused by insects and mites. These methods can include trapping and scouting for pest detection, as well as cultural, physical, environmental, chemical (pesticides), and biological controls. These components, discussed individually below, must be used systematically. Planning and record-keeping are essential.

PEST DETECTION

The most critical part of any pest management program is detecting pests when numbers are still low. This should be done by inspecting plants on a regular basis and/or using traps to detect flying insects.

Yellow traps will catch winged aphids, leafminers, thrips, whiteflies, fungus gnats, and shore flies. Blue traps are sometimes better at detecting western flower thrips, but yellow is satisfactory. Once trapped, the insects must be identified. Recognition of these pests may take some training and a 10 or 15X hand lens for magnification, but it is very important to learn the general outlines and colors of the different insect groups.

Traps should be inspected weekly and counts or estimates made of pest numbers. The traps should be numbered and a greenhouse outline map developed. This should be used to maintain records of trap locations and insect infestations. If used properly, traps will not only provide information on when to apply pesticides, they will aid in monitoring the control program.

Traps should be placed vertically, at or just above plant height. This is where most of the "action" is in insect flight activity. However, fungus gnats, shore flies, thrips, and leafminers can also be trapped effectively just above the growing medium surface. Traps should be placed near side vents, doors and known susceptible varieties. The number of traps used will depend on one's objectives and ability to inspect them. A minimum number should be approximately 4 to 5 per acre, but more will be better, especially when using traps to monitor whitefly population trends.

Sticky traps can be purchased from many greenhouse equipment supply outlets, or made "in-house." Effective traps can be made out of almost anything that either is or can be painted bright yellow. "Rust-Oleum No. 659 Yellow" is a bright yellow paint that works quite well. The sticky material can be as simple as a thin layer of cooking oil, other oils, a mixture of mineral oil and petroleum jelly, or commercially-prepared materials such as "Sticky Stuff" (Olson Products Inc., P.O. Box 1043, Medina OH 44256), or "Pestick" (Phytotronics, Inc, 2760 Chouteau Avenue, St. Louis, MO 63103). Some individuals have placed the sticky material on clear plastic wrap and covered the yellow surface with the wrap for easier removal and trap changing.

Sticky traps, in many cases, will not replace plant inspection as a pest detection method, but are to be used along with it. For example, whiteflies occur in localized infestations that traps may not detect. Non-winged aphids and spider mites are not caught on traps. To summarize, the keys to pest detection are: 1) use yellow traps as a pest management tool, 2) learn to identify what is caught, 3) check, record, and/or change traps weekly, and 4) remember traps will not replace plant inspection, but are to be used along with it.

CULTURAL/PHYSICAL METHODS

Cultural or physical controls will often be effective in reducing pest numbers to the point at which other methods will be more effective. Start with clean plants from reputable suppliers (inspect these plants thoroughly). Try to avoid buying plants from other growers to fill orders unless you have inspected them at the other grower's establishment. Select varieties or plant species carefully. If western flower thrips are severe problems, avoid producing crops which are extremely susceptible to thrips attack and/or virus expression. Knowing something about the susceptibility of varieties to pests will enable you to make educated guesses about where pests will be more serious. Try to group very susceptible varieties in areas physically separated from other crops or varieties, or at least in one zone within the main production area.

Destroy crop residues promptly after harvest. The longer these plants remain the greater the chances are for increased pest populations. Do not place the crop residues outside the greenhouse. Flying adults of many insect species will simply move back into the greenhouse. Do not plant a vegetable garden adjacent to the greenhouse, for the same reasons as above.

Use screens or other barriers to restrict pest movement into the greenhouse from outside, or between different production areas within the greenhouse. Several types of screening material are available, including some with mesh size small enough to restrict thrips movement. Screens will restrict air movement as well, but this can be compensated for by increasing the surface area where air enters the greenhouse. Greenhouse supply companies who sell these materials will be able to assist individual growers who wish to use screens.

The surface on which plants are produced may be modified to be less favorable to pest development. Several examples involve plastic

Continued on next page

under plants or pots. With increasing numbers of growers producing plants in materials such as rockwool on plastic sheeting, there are opportunities to control pests such as western flower thrips and leafminers, *Liriomyza trifolii.* Leafminers and thrips generally drop off of plants and pupate (transform to adults) below the plants. On plastic, the larvae seek the lowest point. Thus, periodic wetting of the plastic substrate will drown significant numbers of leafminers and thrips. For growers using various ebb and flow irrigation systems, large numbers of pests may be washed away along with the irrigation water. Of course, many pests will also drop into the pots or remain on leaves.

ENVIRONMENTAL CONTROL

Manipulating the greenhouse environment has long been suggested as a way of preventing the establishment of plant pathogens (e.g. venting and heating at sunset to reduce leaf wetness and prevent fungal spore germination). This is a procedure that will be more useful as more environmental control computer systems are installed in commercial greenhouses. To date, very little work has been done on manipulating the greenhouse environment to make it less favorable for insects and mites and/or more favorable for natural enemies.

BIOLOGICAL CONTROL

Biological controls are defined as using a living organism to control or manage another living organism. Included are parasites, predators, fungi, nematodes, and viruses. Many of the most important biological controls are purchased from insectaries. Some of the natural enemies available and companies that supply one or more of them are listed in Tables 1 and 2. The biological controls must be introduced on a regular, programmed basis. The natural enemies are often used similar to a regular insecticide application program. Even more than with pesticides, pest management will fail if insect populations are too high when the natural enemies are introduced. Biological controls are not rescue treatments. Often, pest populations will not decline, and probably will even increase for several weeks to two months after introducing natural enemies. The most difficult situation for biological control is in a greenhouse that produces many crops in a large area without any separation. Biological control is usually most successful on crops that are attacked by only 1 or 2 major pests. Even though there are natural enemies available for nearly all major pests, and biological control is theoretically possible, the difficulty of manipulating a complicated pest and natural enemy system will be too great for most people. Also, some crops have an extremely low tolerance for pest injury. In the case of western flower thrips and spotted wilt virus, the level of pests that can be tolerated is as close to zero as can be obtained. Potted chrysanthemums generally will have a lower tolerance for insect injury to lower leaves compared with fresh cut-chrysanthemums. Because lower leaves on fresh cut-chrysanthemums are removed, some insect or mite injury can be tolerated in these areas. Thus, this crop is a realistic candidate for a biological control program. Gerbera and rose (fresh cut-flowers) are other crops where this situation exists. One of the few potted crops where biological insect control may be practical is poinsettia.

If the crops produced and production system seem satisfactory for a biological control program, a reputable supplier of natural enemies should be contacted several months before beginning a biological control program. The supplier should know what crop(s) are being produced, likely pest (and disease) problems, and approximate numbers of natural enemies that will be required. The advice of a knowledgeable expert (the natural enemy supply company, an experienced grower, consultant, etc.) should be sought. Someone with experience in the growing situation in question and/or general geographic area will be the best advisor. It should be remembered that several weeks to months will be required to lower an insect or mite pest population with any natural enemy.

It is best to begin to use biological controls on a small area at first, expanding later as circumstances permit. Not all production areas are suitable for this, however. A special "biocontrol" house or area may need to be constructed for this purpose.

PESTICIDES

Most insecticides and some fungicides are harmful to parasites and predators. Table 3 provides information that should be used as a general guide. Some pesticides might be effective for weeks after application. Be extremely careful when using these materials. Do not use them for at least 30 days before beginning a biological control program, and do not use them anywhere in the greenhouse after beginning a program. Local, or "spot" applications generally are less harmful to natural enemies than treating the entire greenhouse.

Some of the newly-registered pesticides are "soft" on beneficial insects and mites. *Bacillus thuringiensis* formulations are harmless to natural enemies. Insecticidal soaps, as well as insecticides such as abamectin (Avid), neem extract (Margosan), cyromazine (Trigard) and kinoprene (Enstar) tend to be less harmful than conventional materials. This does not mean that these materials are harmless, but that natural enemies can be re-introduced after an application without any harmful effects.

OFA

Table 1. Some commercially available biological controls.

Common Name	Scientific Name	Pests Attacked
Whitefly parasite	*Encarsia formosa*	Whiteflies, especially the greenhouse whitefly
Leaf miner parasites	*Diglyphus* spp., *Dacnusa* spp.	Leaf miners
Mealybug destroyer	*Cryptolaemus montrouzieri*	Citrus mealybugs
Aphid midge	*Aphidoletes aphidimyza*	Aphids
Spider mite predator	*Phytoseiulus persimilis*, other phytoseiids	Spider mites
Green lacewings	*Chrysoperla* sp.	Aphids, caterpillars, whiteflies, mites
Minute pirate bug	*Orius tristicolor*	Thrips, other pests
Thrips predator	*Amblyseius cucumeris*, *A. barkeri*	Thrips
Nematodes	*Steinernema*	Beetle larvae, fungus gnat larvae

Table 2. Some suppliers of beneficial insects and mites in the United States and Canada.*

Alternative
349 East 86th Street
Suite 259
Indianapolis, IN 46240
(317) 823-0432

Applied Bionomics
P.O. Box 2637
Sidney, British Columbia
V8L 4C1
CANADA
(604) 656-2123

Better Yield Insects
13310 Riverside Drive East
Tecumseh, Ontario N8N 1B2
CANADA
(519) 735-0002

Biotactics, Inc.
7765 Lakeside Drive
Riverside, CA 92509
(714) 685-7681

Gerhart's
Avon Belden Road
North Ridgeville, OH 44039
(216) 327-8056

Hydro-Gardens, Inc.
P.O. Box 9797
Colorado Springs, CO 80932
(800) 634-6362

IPM Laboratories, Inc.
Main Street
Locke, NY 13092
(315) 497-3129

Nature's Control
P.O. Box 35
Medford, OR 97501
(513) 773-5927

Rincon-Vitova Insectaries, Inc.
P.O. Box 95
Oak View, CA 93022
(805) 643-5407

*This list is for information only. Contact the individual company for information on prices and ability to supply the required biological controls.

Table 3. Effects of some insecticides and fungicides on biological control agents.*

Pesticide Brand Name	Pesticide Common Name	Encarsia	Phytoseiulus
Ambush	permethrin	H (>30)	H (30)
Benlate, Tersan 1991	benomyl	S	H (7)
Botran	dicloran	S	S
Bravo, Daconil	chlorothalonil	S	S
Captan	captan	S	H (7)
Decis	deltamethrin	H (>30)	H (>30)
DDVP, Vapona	dichlorvos	H (3)	H (3)
Diazinon	diazinon	H (14)	S
Dibrom	naled	H (7)	H (7)
Dipel, etc.	*Bacillus thuringiensis*	S	S
Dursban	chlorpyrifos	H	H
Ficam, Trumpet	bendiocarb	H (20)	H (20)
Bordeaux Mixture, Bordo-Mix	fixed copper	S	S
Funginex, Triforene	triforene	S	H (7)
Safer's Insecticidal		H (0)	H (0)
Kelthane	dicofol	H (14)	H (14)
Lannate	methomyl	H (>42)	H (>42)
Lindane	lindane	H (>30)	H (7)
Malathion	malathion	H (14)	H (14)
Manzate 200	mancozeb	S	H
Nicotine	nicotine sulfate	H (1)	S
Orthene	acephate	H	H (21)
Pentac	dienochlor	H (>42)	H (14)
Sunspray oil	petroleum oil	H (0)	H (0)
Plantfume 103	sulfotepp	H (>56)	H (3)
Pyrenone	pyrethrum + PBO	H (10)	H (10)
Ridomil, Subdue	metalaxyl	S	S
Rovral	iprodione	S	S
Sevin	carbaryl	H (30)	H (30)
Sulfur, Flotox	sulfur	S	S
Thiodan	endosulfan	H	H
Vendex	fenbutatin oxide	S	S

H - harmful; S - safe; ( ) Number of days after application that a material remains harmful. Some materials, such as sulfur sprays and dusts, are not directly toxic, but, especially after repeated use, they will interfere with biological control programs.

Application method and formulation will affect the toxicity, or lack thereof, to natural enemies. There are a number of studies that have conflicting information concerning how long a particular pesticide will remain harmful to a natural enemy. When in doubt, err on the conservative side.

*Modified from information supplied by Applied Bio-Nomics Ltd., Sidney, British Columbia, Canada.

Disinfestants Or Sanitizers And Their Uses In Greenhouses

C.C. Powell, Extension Plant Pathologist, The Ohio State University

Disinfestants or sanitizing agents continue to play an important role in infectious disease management in the greenhouse. Curbing the movement of pathogens on tools, equipment, pots, flats, or in dust around the production and packing areas is an important part of the integrated disease management picture.

The microbes causing almost all infectious diseases are controlled, to some degree, by use of sanitizers. For instance, *Botrytis* grows on plant debris. Spores from this growth that get into the air will be killed by these sanitizers. Dust particles from fallen growing media or plants may contain bacteria, *Rhizoctonia,* or *Pythium.* Again, sanitizers will eliminate these potential inoculums. Even viruses, which are usually alive only in fresh (living) plant debris will be cleaned up by the proper use of a disinfesting product. Good plant health management practices require the routine use of disinfestants or sanitizers.

There are several different types of disinfestants that are effective against plant pathogens. Many plant pathogens form microscopic structures that are especially adapted to enable them to persist on tools, pots, or in dust. The spores of *Thielaviopsis* would be a good example. Therefore, using a disinfestant effectively means that a rigorous treatment is sometimes necessary.

Products traditionally used for plant pathogen elimination include chlorine bleach, formaldehyde, 70% alcohol, phenolics, and quaternary ammonium chloride salts. All of these products work differently and have different properties.

CHLORINE BLEACH

Chlorine is an effective sanitizer. However, it rapidly evaporates from the prepared solution. The concentration normally used is one part household bleach (5% chlorine) to nine parts water, giving a final strength of 0.5%. Use of stronger solutions might harm plastics or metals. The half-life (50% reduction interval) of such a solution is only two hours. Thus, after two hours, only 50% as much chlorine is present in a solution. After four hours, only 25% is present, and so on.... Objects to be sanitized with chlorine require 30 minutes of soaking in the 0.5% solution.

FORMALDEHYDE

Formaldehyde sanitizers are made by taking one part formalin and adding 18 parts water. Formalin solutions are relatively stable. However, the product is harmful to users and gives off a noxious tear gas. Furthermore, exposure to formaldehyde may have long-term consequences. It is for these reasons that formaldehyde is not widely used as a sanitizer. If it is used, gloves should be worn, the area well ventilated, and items soaked for 10 minutes.

ALCOHOL (70%)

Seventy percent alcohol is a very effective sanitizer which acts almost immediately upon contact. However, it is not practical as a soaking material because of its high cost and extreme volatility. It is used as a dip or swipe treatment on knives or cutting tools.

PHENOLICS

Several phenolic compounds were widely used for plant pathogen elimination some years ago. They were never labeled for greenhouse use. It is rare to see them in use now. Use them as you would the Q-salts.

QUATERNARY AMMONIUM CHLORIDE SALTS

Active label development for these products is underway for our industry. Q-salt products currently available for greenhouse use include Greenshield, Physan 20, Consan 20, Prevent, and Triathlon. Q-salts are becoming the most widely used sanitizer products in greenhouses in the United States.

Q-salts are quite stable and work well as sanitizers when used according to labeled instructions. Some of these products are labeled as sprays on plants. These products are **not** protectants on plants! They might eradicate certain pathogens, but will have little if any residual activity. In fact, contact with any type of organic matter will inactivate them. Thus, it is wise to lightly pre-clean treated objects to remove all dislodgeable organic matter. Because it is difficult to determine when they become inactive, prepare fresh solutions frequently (twice a day if in constant use). The products tend to foam slightly when they are active. Thus, when the foaming stops, it is a sign that they are no longer effective.

OFA

CONVERSION LIST AND "RULES-OF-THUMB" FOR FUNGICIDE APPLICATION

1) **Surface**
   1 square inch = 6.5 square centimeters
   1 square foot = 929 square centimeters (0.0929 square meter)
   1 square yard = 0.85 square meters
   43,560 square feet = 1 acre
   2.5 acres = 1 hectare = 10,000 square meters
   1 quart per 100 square feet = 100 gallons per acre

2) **Dry Weight**
   1 ounce = 28.35 grams
   1 pound = 454 grams = 16 ounces
   1 pound of most fungicides per 100 gallons is equivalent to 1 tablespoon per gallon Can be off, however.
   1 tablespoon = 3 teaspoons
   1 ounce active per 100 gallons = 75 ppm
   1 ppm = 1 milligram per 100 grams or 0.001 milliliter per liter
   1 gram per 100 square feet = 1 pound per acre

3) **Liquid**
   1 ounce = 29.6 milliliters = 2 tablespoons
   8 ounces = 1 cup
   2 cups = 1 pint
   2 pints = 1 quart
   4 quarts = 1 gallon
   10 liters = 2.64 gallons
   1 gallon = 128 ounces = 3,800 milliliters = 8.34 pounds of water
   1 gallon of concentrate per 100 gallons of spray = 2.5 tablespoons gallon
   1 quart per 100 gallons = 0.625 tablespoon per gallon
   1 pint = 1 pound of water

MEASURING SMALL VOLUMES OF WETTABLE POWDER FUNGICIDES

Weighing out pesticides is the best and most accurate way to achieve the correct dose. It is easy to weigh out the chemicals if up to 100 gallons of spray are being made. However, users dealing with small jobs need only a gallon or so of spray. A kitchen scale or other "cheapy" is not too accurate when dealing in 0.1 ounce measures. For these measures, accuracy is probably improved by measuring *level* teaspoons (not packed down). The following list is accurate to the nearest 0.25 teaspoon. This table may be used as a guide, but please be certain to read all labels to make certain the product is being used legally.

Product	Rate per 100 Gallons	Teaspoons per Gallon*
Basic copper sulfate	4 pounds	4.5
Benomyl	0.5 pound	1.25
Bordeaux mixture	4 to 8 pounds	4 to 8
Captan	2 pounds	3
Cholorothalonil WP	1.5 pounds	2.75
Copper hydroxide	1.5 pounds	3.5
Dinocap	0.5 pound	0.75
Ethazole	0.31 pound	0.5
Fenaminosulf	0.25 pound	0.75
Ferbam	1.5 pounds	3.5
Folpet	1.5 pounds	2.5
Maneb	1.5 pounds	2.5
Mancozeb	1.5 pounds	2.75
Quintozene	1 pound	1.5
Sulfur 90% WP	4 pounds	4.5
Streptomycin	0.5 pound	1
Thiabendazole	1.5 pounds	4.5

*Sometimes chemical companies change formulations that may result in the densities being different. Always check labels for the latest information.

DILUTION TABLES
A GUIDE TO ACCURATE MEASURES

Equivalent Quantities of Solid Pesticides*

100 gallons	10 gallons	1 gallon
4 ounces	7.5 teaspoons	0.75 teaspoon
8 ounces	5 tablespoons	1.5 teaspoons
1 pound	10 tablespoons	1 tablespoon

Equivalent Quantities of Liquid Pesticides

100 gallons	10 gallons	1 gallon
4 ounces	2 teaspoons	0.25 teaspoon
8 ounces	4 teaspoons	0.25 teaspoon
1 pint	8 teaspoons	1 teaspoon

Equivalent Quantities of 25X Concentrations for Mist Blowers

Amount of Material per 100 Gallons in Hydraulic Sprayers	Amount of Material to be Used in a Mist Blower	
	10 gallons	1 gallon
1 pint	2.5 pints	4 ounces
1 quart	5 pints	8 ounces
1 gallon	2.5 gallons	1 quart

* Use of spoonfulls: Solid insecticides vary so much in weight that it is not possible to give accurate measures in terms of teaspoons or tablespoons. The figures given above are approximations.

Telephone Numbers To Call In Case Of Pesticide Spills, Fires, Accidents, Or Other Emergency Conditions

1. Ohio E.P.A. 24-Hour
   Emergency Response Group —
   1-800-282-9378

2. Cemtrec—Pesticide Spills or Fire —
   1-800-424-9300

3. National Chemical Emergency Response Team —
   Oil or Chemical Spills —
   1-800-424-8802

4. Ohio Department of Agriculture-
   Pesticide Regulation —
   1-614-866-6361

5. E.P.A. Region V— Pesticide Fires or Spills —
   1-312-353-2318

PUBLICATIONS AVAILABLE THROUGH THE OHIO FLORISTS' ASSOCIATION

Additional copies of the *Floriculture Crops: Chemical Use Booklet,* or any of the following publications, may be ordered using the form on the reverse side of this page, or by contacting O.F.A. Services, Inc., 2130 Stella Court, Suite 200, Columbus, OH 43215-1033, USA; (614) 487-1117 or FAX: (614) 487-1216.

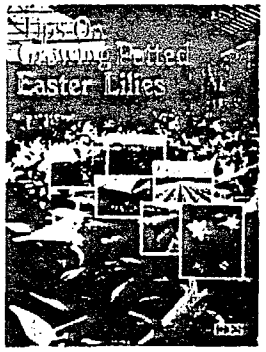

Tips on Growing Potted Easter Lilies—full color, 68 pages with 43 photographs and 36 tables. Contains information on vernalization, scheduling, growing media, nutrition, temperatures, photoperiod, irrigation, water quality, chemical growth regulators, insect control, disease control, physiological disorders, postproduction care and handling, varieties, production costs, and marketing. (The Ohio State University, August, 1990)

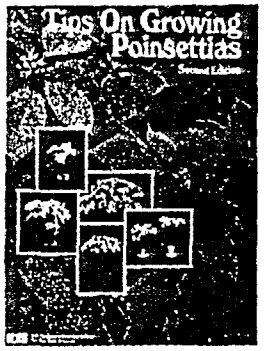

Tips on Growing Poinsettias, Second Edition—full color, 116 pages with 124 photographs and 36 tables. Includes information on stock plant management, propagation, growing media, nutrition, light, temperature, irrigation, schedules, production in southern climates, chemical growth regulators, fungicides, insecticides, postproduction care and handling, production costs and analysis, new varieties, and current poinsettia research. (The Ohio State University, September, 1990)

Tips on Growing Potted Chrysanthemums—full color, 86 pages with 75 photographs and 46 tables. Provides information on growing media, nutrition, pinching, disbudding, lighting, temperatures, carbon dioxide, irrigation, schedules, winter production, fungicides, pesticides, growth regulators, new varieties, marketing, and current chrysanthemum research. (The Ohio State University, November, 1989)

Tips on Growing Bedding Plants, Second Edition—full color, 104 pages with 80 photographs and 72 tables. Includes information on scheduling for flowers and vegetables, fungicides, pesticides, growth regulators, production costs, growing media, plug culture, nutrition, postproduction, and new varieties. (The Ohio State University, October, 1989)

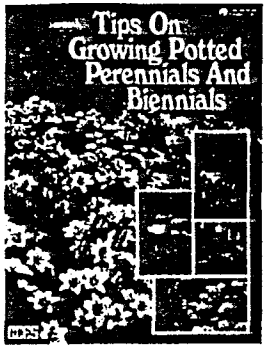

Tips on Growing Potted Perennials and Biennials—full color, 54 pages with over 40 photographs and 31 tables. Contains information on commercial production schedules, growing media, nutrition, insects and related pests, diseases, nutrition, plant longevity, production costs, marketing, and garden care. (The Ohio State University, April, 1989)

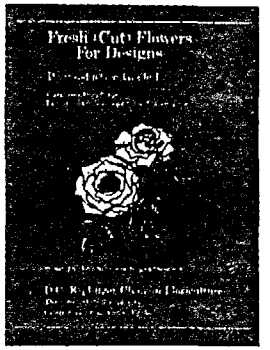

Fresh (Cut) Flowers For Designs—features the most up-to-date information for postproduction care and handling of fresh cut-flowers. Details on production factors, postproduction factors, retail handling, and consumer care are provided for 136 florist crops. Includes botanical drawings for each crop section, which can be used as clip art. (Prepared by John N. Sacalis, Rutgers University, New Brunswick, NJ, The Ohio State University, D.C. Kiplinger Chair in Floriculture, July, 1989)

Ohio State Flower Grower's Hotline—newsletter featuring timely information on insect outbreaks, disease epidemics, and changing cultural procedures faced by commercial growers. Sample topics of recent Hotline's include: guidelines for controlling: western flower thrips, poinsettia whitefly; avoiding ethylene toxicity; adjusting growing media pH; managing: *Botrytis* of bedding plants, geranium bacterial blight; and proper algaecides usage. A minimum of 12 Hotlines is published per a 12-month subscription period and mailed to subscribers via first class or air mail. (Ohio Florists' Association)

In circulation for spring 1991:

Tips on Growing Zonal Geraniums, Second Edition

Tips on Chemical Growth Regulator Application

OHIO FLORISTS' ASSOCIATION PUBLICATIONS LIST AND ORDER FORM

PUBLICATION DESCRIPTION	Quantity	Price	Total
Floriculture Crops: Chemical Use Booklet		(Member) $10.00	
		(Nonmember) $15.00	
Tips on Growing Potted Easter Lilies		$14.00	
Tips on Growing Poinsettias		$14.00	
Tips on Growing Perennials and Biennials		$12.00	
Tips on Growing Bedding Plants		$14.00	
Tips on Growing Potted Chrysanthemums		$14.00	
Tips on Growing Zonal Geraniums, Second Edition[1]		$14.00	
Tips on Chemical Growth Regulator Application[1]		$14.00	
Fresh (Cut) Flowers for Design		$11.95	
Ohio State Flower Grower's Hotline (Annual subscription, not subject to handling charge)		$10.00 (U.S.)	
		$15.00 (Canada and Mexico)	
		$20.00 (All Other Countries)	
Ohio Residents add 5.75% sales tax to total			
Domestic orders and foreign surface mail add $5.00 per book for postage and handling[2]		$5.00	
Foreign air mail add $15.00 per book[2]		$15.00	
TOTAL—U.S. FUNDS ONLY[3]			

[1] In circulation spring 1991

[2] Orders of three or more books: call for special handling rates

[3] Prices effective through 12/31/91

Ship to:

Name_____

Company_____

Mailing Address_____

City_____

State, Zip_____

Country_____

Phone_____

Enclose check made payable to: O.F.A. Services, Inc., and mail to:

Ohio Florists' Association
2130 Stella Court, Suite 200
Columbus, OH 43215-1033 USA

Are you an Ohio Florists' Association member? ☐ Yes ☐ No

Please indicate your business or area(s) of interest by checking all categories that apply:

☐ Allied Trade ☐ Educator

☐ Garden Center ☐ Grower

☐ Interior Plantscape ☐ Nursery

☐ Retail Florist ☐ Student

☐ Wholesale ☐ Other_____

OHIO FLORISTS' ASSOCIATION
2130 Stella Court, Suite 200
Columbus, OH 43215-1033 USA
Address Correction Requested

NON-PROFIT ORG.
U.S. POSTAGE
PAID
COLUMBUS, OHIO
PERMIT No. 644

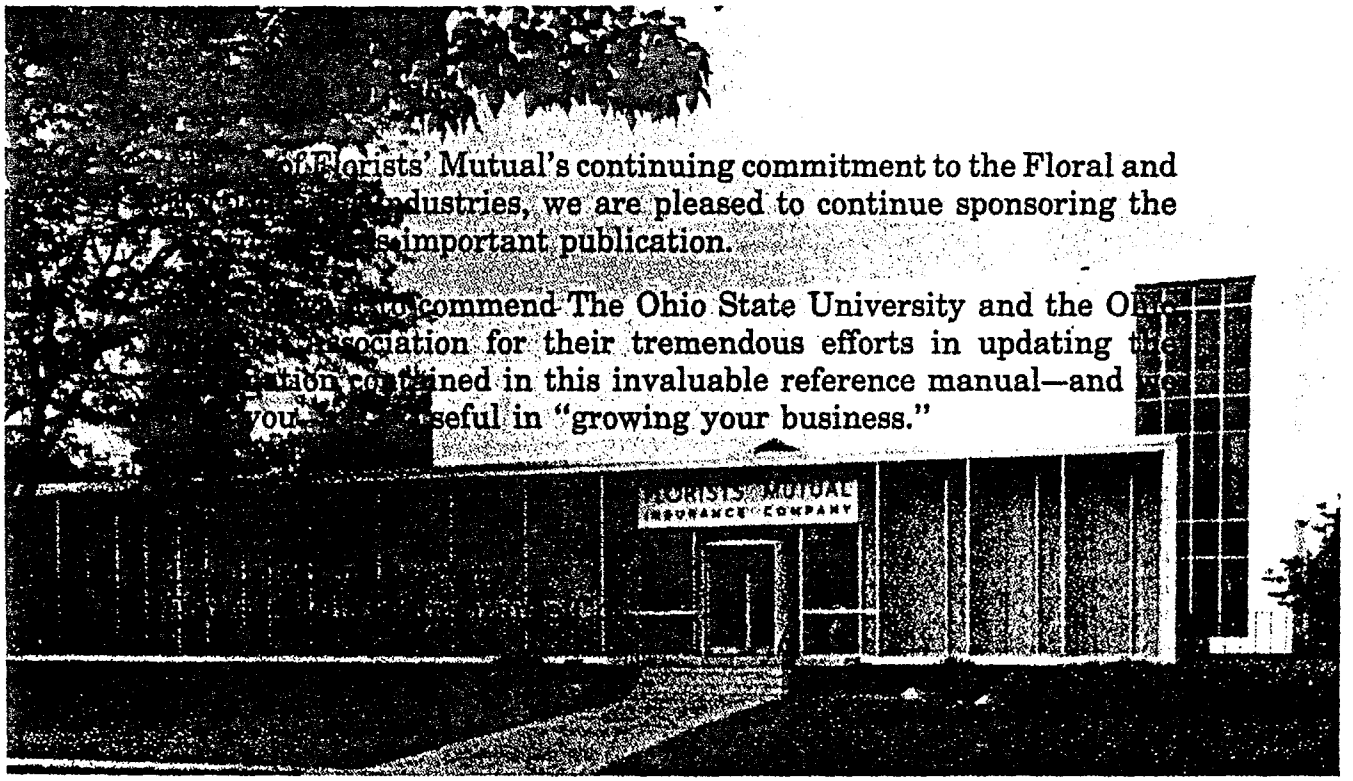

Board of Directors

Stanley F. Bachman
Bachman's, Inc.
Minneapolis, MN

Douglas K. Dillon, Chairman
Dillon Floral Corp.
Bloomsburg, PA

M. James Leider
Leider Horticultural Companies, Inc.
Riverwoods, IL

Lindley S. Mann, Jr.
E.G. Hill Company, Inc.
Richmond, IN

Ole B. Nissen
Sunshine State Carnations, Inc.
Hobe Sound, FL

Stephen B. Otte, President
Florists' Mutual Insurance Co.
Edwardsville, IL

Arne M. Thirup
Pajaro Valley Greenhouses, Inc.
Watsonville, CA

Donald E. Weder
Highland Supply Corp.
Highland, IL

George E. Wolfe, Jr.
Wolfe the Florist, Inc.
Waco, TX

G. Ramsey Yoder
Yoder Brothers, Inc.
Barberton, OH

FLORISTS' MUTUAL
INSURANCE COMPANY

500 St. Louis Street
Edwardsville, IL 62025
(800) 851-7740
FAX (800) 233-3642

256

APPENDIX D

Turnkey Greenhouse and Associated Facilities Proposal

The authors of this report were asked to provide a "turnkey" proposal for a five (5) hectare greenhouse facility to be constructed in Jordan. After interviewing a number of greenhouse companies capable of such a task, the authors selected Rough Brothers of Cincinnati, Ohio, USA.

The president of Rough Brothers, Al Reilly, in turn prepared a detailed outline of questions and discussion topics which have to be address and answered BEFORE specific blueprints and construction costs can be prepared. This outline is presented below.

It is proposed that Rough Brothers, in cooperation with Perishables Research Organization, be retained to prepare the detailed "turnkey" greenhouse facility plan. This plan would also contain a bid from Rough Brothers for the materials alone as well as the materials and erection of this facility.

The cost to prepare this "turnkey" plan is $28,000. Not included in this figure are any fees or out-of-pocket expenses associated with any possible trip to Jordan if such was deemed appropriate by the project coordinator.

Finally, two pages of information about Rough Brothers are included at the end of this Appendix. A video and additional printed information about this company are also being provided to Sigma One under separate cover as they cannot be easily attached to this report.

I General Conditions

A. Basic growing requirements

1. crops to be grown
2. methods of production

B. Facility design

1. zone size and alignment
2. layout of growing and support areas
3. product flow

4. provisions for expansion

C. Environmental requirements

1. interior requirements

a. temperature range
b. humidity range
c. light intensity requirement
d. air change requirement
e. insect exclusion requirement

2. external conditions

a. min/max temperature and humidity
b. light intensity and cloud cover data
c. rain, snow and wind data

II Growing Structures

A. Structure design

1. glazing preferred
2. span and height requirements
3. access (i.e. partitions/doors/etc.)
4. zone size considerations
5. live loading (wind/rain/snow)
6. dead loading (structure/crop support/equipment)
7. floors/walks/drainage
8. utility access

B. Environment equipment

1. heating

a. type
b. fuel available
c. electricity available and phase/volts
d. input required/heat loss

2. ventilation

a. material
b. mechanical or automatic

3. cooling

a. evaporative pad or fog system
b. shade system

4. humidification

a. fog
b. mist

5. light management

a. shade/blackout system
b. supplemental lighting
c. operational lighting

6. environmental control

a. centralized computer
b. decentralized/sequential

III. Support Structures

A. Growing support

1. planting and harvesting
2. grading and bunching
3. precooler
4. packaging and shipping
5. transportation/loading/loading docks
6. equipment storage

B. Employee facilities

1. work room/rest rooms
2. break room/lunch room/kitchen
3. meeting/training area
4. packing

C. Administrative facilities

1. offices/office equipment
2. communications equipment
3. record storage
4. computer area

D. Site requirements

1. roads, grading, etc.
2. fences and the like

IV Construction

A. Materials available

1. concrete
2. hand and power tools
3. electricity during construction (voltage/cycle)
4. digging and lift equipment

B. Site conditions

1. soil bearing
2. site preparation
3. foundation requirements

C. Labor availability

1. capability and reliability
2. cost
3. labor unions
4. communication/language
5. supervision requirement
6. electrical/plumbing contractor capabilities

V Cost Analysis

A. Initial installation cost-structures/equipment

B. Operating costs

1. utilities
2. maintenance
3. growing

a. personnel
b. growing