The Hashemite Kingdom of Jordan

Ministry of Water and Irrigation

PN-ABY-043

Water Quality Improvement and Conservation Project

Industrial Audit:

Jordan Yeast Industries Co., Ltd.

Harza Environmental Services, Inc.

The Technical Assistance Team Includes:

Development Alternatives, Inc.
Science Applications International Corp.
Harza Environmental Services, Inc.
Development Associates, Inc.

United States Agency for International Development
Contract No. 278-0288-00-C-4026-00

April 1995

AUDIT REPORT
YEAST INDUSTRIES COMPANY LTD.
JORDAN

Submitted to:
United States Agency
For International Development

Submitted by:
Development Alternatives, Inc.

Prepared for:
Amman Chamber of Industry, Jordan
Ministry of Water and Irrigation, Jordan

Prepared by:
Harza Consulting Engineers and Scientists
Chicago, Illinois, U.S.A.
in association with
Royal Scientific Society
Amman, Jordan

PREFACE/ACKNOWLEDGMENTS

This report is the result of a 4-week study/audit/evaluation of the Yeast Industries Company Ltd. Jordan. The purpose of the study was to evaluate and identify potential pollution prevention/waste minimization and water conservation techniques which are appropriate. The executive summary on the following pages outlines the consultants findings and actions during the study/audit/evaluation.

Several individuals on the Water Quality Improvement and Conservation Project contributed to this report. Dr. Usama Mudallal of the Amman Chamber of Industry (Chamber); Engineer Rania Abdul Khaleq of the Ministry of Water and Irrigation (MWI); Eng. Marwan Al Tal, of the Water Authority of Jordan (WAJ); and Dr. Riyad Musa and Dr. Omar Jabay of the Royal Scientific Society of Amman; plant managerial and technical staff including Mr. Remon B. Haltehi, General Manager and Mr.Samir Jouaneh, Production Manager, who shared their knowledge with Mr.Krishna Mayenkar, P.E., of Harza Consulting Engineers and Scientists (Harza), Chicago, USA. These technical staff worked under the direction of Dr. Shawn R. Niaki, P.E., Pollution Prevention Program Director, of Harza, who heads the WQIC component under which the study/audit/evaluation was housed. It is from their combined expertise that this report was possible.

Special appreciation is given to Dr. Mohammed Bani Hani, Secretary General of MWI; Eng. Koussai Quteishat, Secretary General of WAJ; Mr. Khaldun Abuhassan, Chairman of the Chamber; Mr. Walid Al-Khathib, Director General of the Chamber; Dr. Muwaffaq Saqqar of MWI, Project Coordinator; Dr. Raja Gadoun, Director of theWAJ Laboratories; Eng. Randa Dufaha of theWAJ Laboratories; the members of the PP/WM working group from WAJ including Eng. Abdul Wahab Matar, Eng. Nabeel Hejazin, Eng. Mohamad Lafi; and to Development Alternatives, Inc., as represented by Edwin D. Stains, Chief of Party; for their cooperation and confidence.

Table of Contents

1.0 INTRODUCTION 1
- 1.1 Background 1
- 1.2 Objectives 1
- 1.3 The Report 2

2.0 PROCESS AND FACILITY DESCRIPTION 3
- 2.1 General 3
- 2.2 Facility Description 3
- 2.3 Yeast Production Operations 4
  - 2.3.1 Molasses Preparation 4
  - 2.3.2 Fermentation 5
  - 2.3.3 Product Recovery 6
  - 2.3.4 Product Dewatering 6
  - 2.3.5 Product Packaging 7
- 2.4 Ancillary Operations 7
  - 2.4.1 Equipment Cleaning 7
  - 2.4.2 Steam Production 9
  - 2.4.3 Equipment Cooling 9
  - 2.4.4 Facility Housekeeping 9
  - 2.4.5 Wastewater Treatment 10
- 2.5 Raw Material Usage 10
- 2.6 Current Environmental and Maintenance Programs 10
- 2.7 Environmental Regulations and Guidelines 11

3.0 AUDIT PROCESS 12
- 3.1 Audit Coordination 12
- 3.2 PP/WM Background Material Preparation 12
- 3.3 Pre-Inspection Meeting 13
- 3.4 Audit 13
- 3.5 Post-Inspection Meeting 14

4.0 AUDIT FINDINGS 15
- 4.1 Overall Water Usage and Balance 15
- 4.2 Wastewater Sources and Discharges 15
  - 4.2.1 Process Wastewaters 15
  - 4.2.2 Equipment Cleaning Wastewater 16
  - 4.2.3 Floor Washwater 16
  - 4.2.4 Cooling System and Regenerant Wastewater 17
  - 4.2.5 Domestic Wastewater 17
  - 4.2.6 Total Wastewater Discharge 17
- 4.3 Miscellaneous Water Losses 18

4.4 Storm Water 18
4.5 Solid Wastes 18
4.6 Air Emissions 18
4.6.1 Fermentors 19
4.6.2 Steam Boiler 19
4.6.3 Fluidized Bed Dryer 19
4.6.4 Wastewater Treatment Plant 19
4.7 Treatability Test Results 20
4.8 Data Gaps 20

5.0 POLLUTION PREVENTION/WASTE MINIMIZATION POTENTIAL 22
5.1 Pollution Prevention/Waste Minimization - Water 22
5.1.1 Process Wastewater 22
5.1.2 Equipment Cleaning Wastewater 23
5.1.3 Floor Washwater 24
5.1.4 Regenerant Waste 24
5.1.5 Industrial Wastewater Treatment 24
5.1.6 Domestic Wastewater Treatment 25
5.2 Pollution Prevention/Waste Minimization - Solid Waste 26
5.3 Pollution Prevention/Waste Minimization - Air 26

6.0 WATER CONSERVATION POTENTIAL 28
6.1 Process Optimization and Modifications 28
6.2 Tank Cleaning Frequency Reduction 29
6.3 Steam Recycle 29
6.4 Floor Washing 29
6.5 Replacing Evaporative Cooling with Air Cooling System 30
6.6 Miscellaneous Reductions 30
6.7 Wastewater Treatment Plant Cleaning 31
6.8 Domestic Water Use 31
6.9 Conceptual Water Balance 32

7.0 CONCLUSIONS AND RECOMMENDATIONS 33
7.1 Conclusions 33
7.2 Recommendations 34
7.3 Success Stories 37

8.0 FOLLOW-UP ACTIONS 38

TABLES

Table 1.	Summary of Annual Raw Material Consumption
Table 2.	Overall Water Balance Across Facility
Table 3.	Summary of Wastewater Sources
Table 4.	Comparison of Yeast Separator Effluent
Table 5.	Filter Press Effluent Characteristics
Table 6.	Rotary Vacuum Filter Effluent Characteristics
Table 7.	1991 Effluent Quality Data
Table 8.	Summary of Wastewater Effluent Characteristics (1990-1993)
Table 9.	Summary of Evaporative Losses
Table 10.	Summary of Solid Wastes Generated
Table 11.	Treatability Test Results
Table 12.	March 1995 Wastewater Sampling Results
Table 13.	Proposed Water Reduction, Recycle and Reuse

FIGURES

Figure 1.	Yeast Manufacturing Process-Block Flow Diagram
Figure 2.	Overall Water Balance
Figure 3.	Conceptual Water Balance
Figure 4.	Process Water Recycle Technology for Yeast Manufacturing Facility

APPENDICES

Appendix A.	Audit Questionnaire
Appendix B.	Support Data Provided by the Industry
Appendix C.	Background Material Report
Appendix D.	Applicable Water Quality Criteria
Appendix E.	Facility Photos

ABBREVIATIONS

Organizations

ABC	Arab Brewery Company
CHAMBER	Amman Chamber of Industry
DAI	Development Alternatives, Inc.
FAO	Food and Agricultural Organization
MWI	Ministry of Water and Irrigation
RSS	Royal Scientific Society
USAID	United States Agency for International Development
WAJ	Water Authority of Jordan
WQICP	Water Quality Improvement and Conservation Project
YIC	Yeast Industries Co. Ltd.

General Terms

IWDPP	Industrial Wastewater Discharge Prevention Program
PP/WM	Pollution Prevention/Waste Minimization

Technical Terms

BOD_5	Biochemical Oxygen Demand
COD	Chemical Oxygen Demand
TDS	Total Dissolved Solids
TSS	Total Suspended Solids
TVS	Total Volatile Solids
TVSS	Total Volatile Suspended Solids
NH_3-N	Ammonia Nitrogen
T-N	Total Nitrogen
T-P	Total Phosphates
WWTP	Wastewater Treatment Plant
mg/l	Milligrams per liter
su	Standard Units

EXECUTIVE SUMMARY

Development Alternatives, Inc. (DAI) under Contract No. 278-0288-00-C-4026-00 with the United States Agency for International Development (USAID) is performing an Industrial Wastewater Discharge Prevention Program (IWDPP) in Amman, Jordan. This Program is one of four components of the Water Quality Improvement and Conservation Project (WQICP) funded by USAID. This program is being performed by DAI with full coordination between the Ministry of Water and Irrigation (MWI) and the Amman Chamber of Industry (Chamber). Harza Consulting Engineers and Scientists (Harza), Chicago, United States (U.S.), was retained by DAI to lead the IWDPP. The Royal Scientific Society (RSS) of Amman, Jordan was selected as a local consultant to assist Harza with the IWDPP. This Program includes conducting the PP/WM audits, feasibility studies, and designing demonstration facilities at selected industrial facilities.

Based on a ranking methodology, the PP/WM Committee has selected ten industries with potential needs for PP/WM audits. The purpose of the audits is to assist the industries in the Amman-Zarqa Basin in assessing pollution problems and developing alternative solutions to achieve desired levels of PP/WM, water conservation, and wastewater treatment appropriate for the selected industry. One of these industries is the Yeast Industry. The Harza/RSS team conducted an audit of Yeast Industries Company, Ltd., representing the first step of the IWDPP. This report summarizes the results of the audit.

PROCESS AND FACILITY DESCRIPTION

The YIC is located on the north bank of the Zarqa River in an agricultural area near the western perimeter of the Ruseifa, Jordan. The facility produces fresh compressed and dry active baker's yeast. The facility started production in 1978. In 1992, the facility produced 2,582 tons of compressed yeast and 865 tons of dry yeast (95 to 98 percent solids) which is equivalent to about 2,600 tons of wet filtered yeast with 30 to 32 percent solids. On a wet basis (about 30 percent solids), YIC produces about 5,200 tons of yeast per year, which is about 87 percent of the facility's total production capacity (6,000 tons per year). The facility operates 24 hours per day and seven days a week. The facility employs about 70 people.

The facility occupies 10,000 square meters of land and consists of a main production building which houses the fermentors, dryers, packaging equipment and plant offices. Also, there is a small utility building which houses two boilers for process steam production and five air compressors which supply air to the fermentors. Outside of the facility buildings, there are molasses storage tanks, water cooling towers, and an abandoned wastewater treatment plant.

The YIC facility operations include two main categories. They are:

- Yeast Production Operations; and
- Ancillary Operations.

CURRENT ENVIRONMENTAL AND MAINTENANCE PROGRAMS

The current and anticipated environmental programs at YIC include the following:

- Conserving chemicals and reducing pollution discharge through CIP systems for the caustic soda wash.
- Conserving and reducing pollution discharge by using steam sterilization rather than a chemical/water mixture.
- Optimizing the fermentation process by replacing manual operations with automation.
- Selling boomed salts for commercial use.
- Investigating the use of a "Decanter" device to reclaim sugars from the molasses sludge. This will reduce organic pollutants in the sludge disposed.
- Optimizing nutrient doses used for yeast growth.
- Relocating the filter press to avoid spills of yeast and loss of filter cake.
- Installing a new fresh yeast packaging line to reduce loss of fresh yeast during packaging operations.

ENVIRONMENTAL REGULATIONS AND GUIDELINES

Jordan currently has no comprehensive law to control water, air and soil pollution. However, industrial wastewater discharges are regulated by the Jordanian Standard 202, adopted in 1981 by the Department of Standards and Specifications and revised in 1990. Standard 202 regulates industrial wastewater discharges to rivers, wadis, groundwater, the sea, and reuse for irrigation.

Drinking water quality is regulated by Jordanian Standard 286. Moreover, it is a common practice to use the Food and Agriculture Organization (FAO) guidelines as a reference.

AUDIT

The initial facility audit was conducted on March 11 and 14, 1995. The audit team accompanied by two YIC representatives, toured and inspected the facility. An audit questionnaire was used to address specific details of the manufacturing process.

A subsequent visit was conducted on March 18, 1995, at which time the audit team collected grab samples of the final wastewater effluent and the three separator effluents. The audit team also conducted cursory treatability studies on the separator effluents and final effluent using lime.

ferric chloride, alum and hydrogen peroxide reagents.

AUDIT FINDINGS

Water Usage

Water for industrial use at the YIC facility is obtained from a private groundwater supply well. The facility uses this water primarily for (as a percentage of total fresh water consumed):

- Process Operations (66%);
- Equipment Cleaning (18%);
- Cooling (9%);
- Sterilization (3%);
- Floor Washing (3%); and
- Regeneration and Other (1%).

Water used for domestic purposes in entirely supplied by WAJ. An overall water balance across the facility is presented in Table ES-1 and is illustrated on Figure ES-1.

Wastewater Sources

The main wastewater sources at YIC are:

- Centrifuge Separator Discharges (390 m^3/day);
- Tank Washwater (54 m^3/day);
- Wastewater Treatment Plant Washwater (50 m^3/day);
- Floor and Lab Wastewater (21 m^3/day);
- Filter Washwater (10 m^3/day); and
- Filtrates (10 m^3/day).

The residual molasses liquor discharged from Separator #1 is the most concentrated wastewater generated at the facility. Wastewater effluent from Separator #2 is moderately high with respect to organic loading, next to the Separator #1 effluent. Other combined discharges could be considered to be dilute wastewater. The YIC does not have a program for monitoring water use, wastewater discharges and air emissions. The wastewater sources are summarized in Table ES-2.

The total facility industrial wastewater discharge amounts to about 545 m^3/day. All the industrial wastewater is discharged to an off-site landfarm except for a portion which is lost due to evaporation, fugitive steam, and product moisture. These water losses (91 m^3/day) correspond to approximately 16% of the total wastewater discharge.

3

Storm Water

All storm water is discharged to a nearby Wadi through natural grade.

Solid Wastes

The solid wastes generated at the YIC facility include:

- Spilled yeast recovered through the dryer exhaust cyclone;
- Packaging materials (wax paper, aluminum foil, cardboard);
- Empty plastic bags;
- Empty plastic carboys;
- Broomed salts;
- Domestic wastes; and
- Automobile tires.

The YIC disposes most solid wastes at a local landfill. However, plastic bags are given away and broomed salts are sold to the public.

Air Emissions

Air emissions at the facility are not measured or monitored. However, there are four likely sources of air emissions at the facility:

- Fermentors;
- Steam Plant Boiler;
- Fluidized Bed Dryer; and
- Abandoned Wastewater Treatment Plant.

Volatile organic compounds (VOCs), sulfur and nitrogen oxides and particulate emissions are of particular concern.

CONCLUSIONS

Several PP/WM and water conservation opportunities exist the YIC facility. By implementing the following measures, the pollution load is expected to be reduced by about 15 to 20 percent and the total water consumption can be reduced from 636 m^3/day to 438 m^3/day, resulting in a 30 percent reduction. Figure ES-2 presents the proposed water usage plan and Table ES-3 summarizes the proposed water reduction, recycle and reuse. Identified PP/WM and water conservation opportunities are noted below:

1. The organic load generated at the facility could be minimized through:

    - Process optimization and automation;

- Process automation with incremental feed additions rather than manual batch operation;
- Fermentation process control through exhaust monitoring and feed back control;
- Minimizing tank cleaning frequency;
- Countercurrent washing of yeast including reuse of filtrate;
- Good housekeeping;
- Sweeping or dry vacuuming floors; and
- Implementation of new technologies or installation of new resins for water demineralization.

2. Water savings should result from the PP/WM measures described herein. In addition, water conservation can be achieved through implementation of:

   - Installation of an air cooling system;
   - Use of dilute wastewaters to clean wastewater conveyance piping instead of fresh water;
   - Tank cleaning frequency minimization and use of last rinse water for the first rinse of the next cleaning cycle; and
   - Filtrate recycling.

   Other PP/WM and water conservation opportunities such as vented steam capture and recycle, and separator effluent evaporation and recycle may exist which may require new process applications or modifications and which may be relatively more difficult to implement. However, PP/WM and water conservation opportunities not evaluated at his time should not be eliminated from consideration, as their feasibility can only be determined through more intensive study and evaluation.

   In the future, if YIC implements a vented steam capture and recycle system and a separator effluent evaporation and water recovery system, the effluent flow and pollution reduction could be as much as 60 percent. As previously stated, however, this may not be economical in the foreseeable future.

RECOMMENDATIONS

To achieve PP/WM and water conservation objectives, our recommendations are:

1. Install devices to monitor discharges from all processes and cleaning operations including equipment and floor cleaning. Generate and maintain an accurate measurement and balance of facility water use. Water and wastewater flows should be monitored daily.

2. Design and implement a wastewater sampling and monitoring program to cover all wastewater sources identified in this report. All wastewaters be monitored for pH, BOD_5, COD, TSS, TDS, NH_4-N, T-N and T-P.

For the first year, a monthly sampling frequency should provide the YIC management a fair idea of the pollutant loads in different wastewater streams. The final effluent, however, should be monitored weekly, except for flow and pH which should be recorded daily. The sampling frequency can be adjusted to quarterly sampling upon process optimization.

Also, initiate fermentor exhaust sampling and monitoring program to monitor VOC emissions.

3. Optimize, modify and upgrade the molasses preparation and fermentation systems through automation and process monitoring, and incremental-feed system implementation.

4. Optimize tank cleaning systems by minimizing the washing frequency and using the last rinse water for the initial rinse of the next cleaning sequence.

5. Recycle and reuse filtrate and implement counter-current yeast washing system.

6. Establish and implement rigorous equipment cleaning and floor cleaning procedures to conserve water.

7. Optimize cleaning methods by carefully studying current procedures, washing time, solution concentration, water temperature, intensity of application etc. By applying an appropriate combination of these elements to each type of tanks can reduce water use. Establish protocols and procedures.

8. Explore feasibility of sterilization steam recovery. Optimize the regeneration process and explore the use of new technologies and resins.

9. Improve housekeeping and implement a spill prevention and control and countermeasures program. Use dry vacuum techniques instead of washing spills into the drain.

10. Segregate Separator #1 effluent and other dilute wastes. Use existing wastewater tanks to store them separately. Use a portion of the dilute wastewater , rather than using fresh water, to clean and flush the wastewater equipment and conveyance piping system.

11. Explore installing an air cooling system to replace the existing wet evaporative cooling system.

12. We concur with the following recommendations made in the WEC report:

    The outdoor above-ground diesel storage tank and acid tanks should have a containment dike built around it such that this dike could contain the volume of the tank in case of tank failure or rupture. It is also a safe operating practice.

6

The underground storage tank of diesel fuel should have a management program whereby on a weekly basis the plant logs usage, receipt of fuel, and tank inventory by level. By keeping this type of log, the plant should be able to balance fuel use from the tank and detect a leak, if it occurs, at an early stage.

13. The YIC should develop an environmental management program to include:

- Establishing an Environmental Department with dedicated personnel and sufficient resources;

- Writing an environmental policy complete with missions, visions, goals, policies and a future work plan. The PP/WM and water conservation goals need to be established to achieve the PP/WM program, in line with the Ministry goals; and

- Developing training and incentive programs for all YIC personnel.

14. Consider the following PP/WM and water conservation items for feasibility levels studies:

- Process modifications and upgrading through automation;
- Optimization of tank cleaning system; and
- Implementation of air cooling system.

Although the above items will, if implemented, reduce the organic pollution and wastewater volume by 15 to 20 percent, we strongly feel that YIC should undertake thorough feasibility level efforts to determine a cost effective treatment for processing the final wastewater. Some of the options we recommend for the YIC's consideration are as follows:

- Total wastewater attenuation, filtration and land application.
- Total wastewater coagulation, dissolved air flotation, filtration and land application.
- Total wastewater coagulation, clarification, anaerobic biodegradation treatment followed by off-site land application.
- Segregation of concentrated and dilute waste; treatment of concentrated waste by coagulation, and dissolved air flotation; mixing with dilute wastewater; filtration and land application of combined wastes.
- Segregation of concentrated waste and treatment by coagulation, clarification, anaerobic biodegradation; mixing treated waste with dilute waste; filtration and land application of combined wastes.

In all above options, the following will apply:

- Land treatment should be thoroughly pilot studied, designed, constructed,

operated and monitored throughout the life cycle.

- Sludges produced should be dried using sludge drying beds and dried sludge either marketed or disposed.

- Existing wastewater treatment equipment should be used to the fullest extent.

- An on-site anaerobic biotreatment, if operated, will generate relatively minimum sludge. It will produce methane gas which can be flared or used as a fuel for the boiler, if feasible.

Table ES-1
OVERALL WATER BALANCE ACROSS FACILITY[1]

Yeast Industries Company

Water Inflow (m^3/day)		Water Outflow (m^3/day)	
Well Water Pumped	626	Separator Discharge	390
Molasses Moisture	10	Cooling System	56
		Tank Washing	54
		WWTP Cleaning	50
		Floor/Lab Washing	21
		Boiler Make-Up Water	20
		Filter Cleaning	10
		Filter Press and RVF	10
		Dryer Exhaust	10
		Product Moisture	10
		Regeneration	3
		Chiller Make-up	1
		Valve Operator	1
TOTAL	636		636

1 Domestic water is supplied by the Water Authority of Jordan and domestic wastewater is discharged to the on-site septic tank. Daily domestic water consumption is 10 m^3.

Table ES-2
SUMMARY OF WASTEWATER SOURCES[1]

Yeast Industries Company

Source	Volume (m^3/day)
Process Wastewater	
Separator Discharge	390
Filter Press and RVF Filtrates	10
Equipment Cleaning Wastewater	
Tank Washwater	54
WWTP Cleaning	50
Filter Cleaning	10
Floor Washwater (including lab)	20
Cooling System Wastewater	6
Regenerant Wastewater	3
Valve Opener Wastewater	1
TOTAL	545

1 Domestic wastewater is generated at a rate of approximately 10 m^3/day.

Table ES-3
PROPOSED WATER REDUCTION, RECYCLE AND REUSE[1]

Yeast Industries Company

Source	Water Usage (m^3/day)		
	Current	Projected	Savings
Separator Discharge (including filtrate return)	390	330	60
Cooling System	56	6	50
Tank Washing	54	27	27
WWTP Cleaning	50	0	50
Floor/Lab Washing	21	13	8
Boiler Make-Up Water	20	20	0
Filter Cleaning	10	8	2
Filter Press and RVF	10	10	0
Dryer Exhaust	10	10	0
Product Moisture	10	10	0
Regeneration	3	2	1
Chiller Make-up	1	1	0
Valve Operator	1	1	0
TOTAL	636	438	198

1 Domestic water is currently consumed at YIC at a rate of approximately 10 m^3/day. It is expected that consumption can be reduced by 20 to 40 percent.

2 If in the future, an Overcash Water Recovery System is implemented to recover separator #1 effluent, an additional 120 m^3/day water can be saved thereby reducing the pollution load and water usage by 50 to 60 percent.

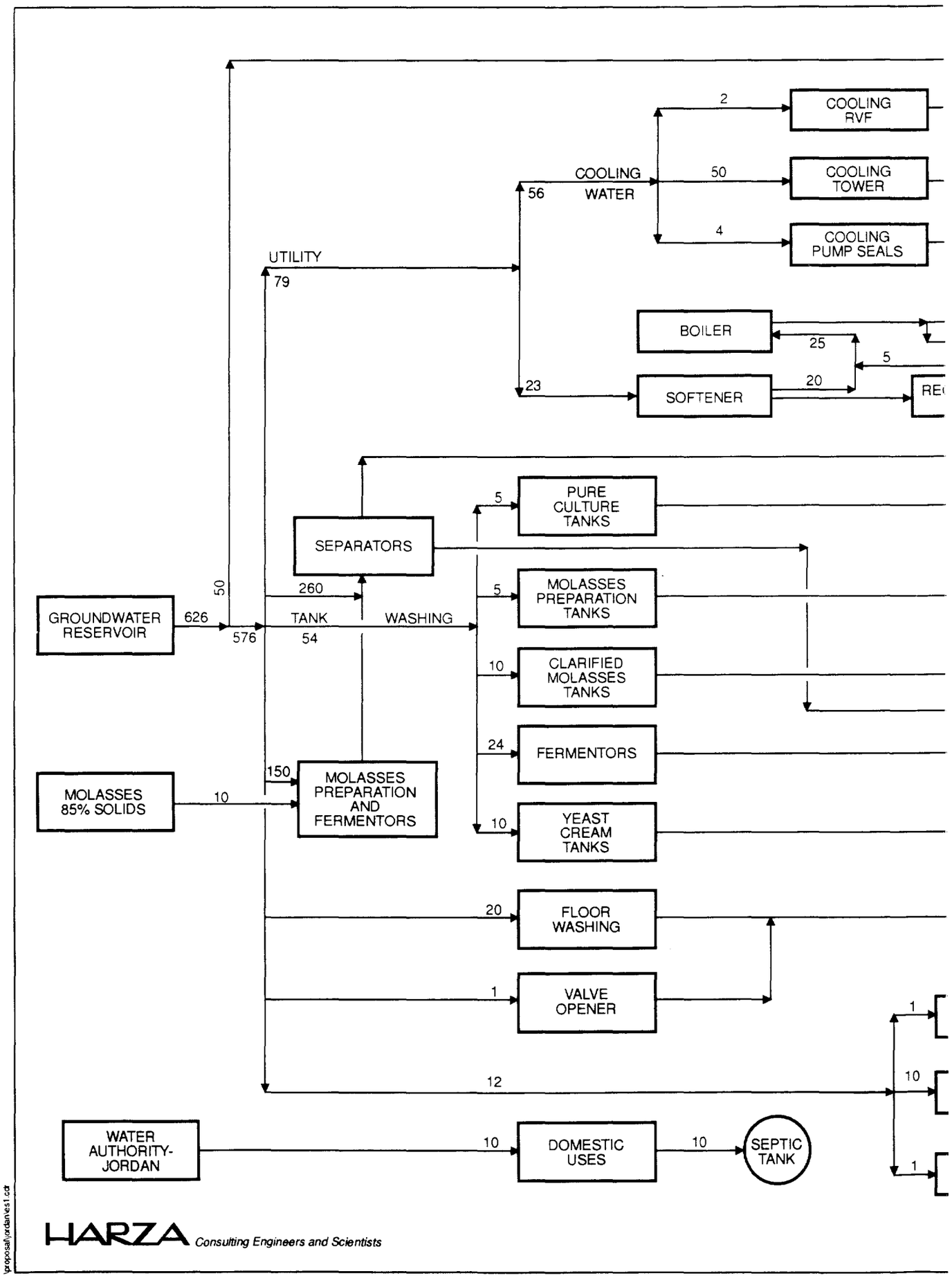
COOLING RVF
COOLING TOWER
COOLING PUMP SEALS
COOLING WATER
2
50
4
56
UTILITY
79
BOILER
25
5
20
23
SOFTENER
SEPARATORS
PURE CULTURE TANKS
MOLASSES PREPARATION TANKS
CLARIFIED MOLASSES TANKS
FERMENTORS
YEAST CREAM TANKS
FLOOR WASHING
VALVE OPENER
GROUNDWATER RESERVOIR
626
576
50
260
TANK
WASHING
54
MOLASSES 85% SOLIDS
10
150
MOLASSES PREPARATION AND FERMENTORS
24
12
WATER AUTHORITY-JORDAN
DOMESTIC USES
SEPTIC TANK
HARZA Consulting Engineers and Scientists

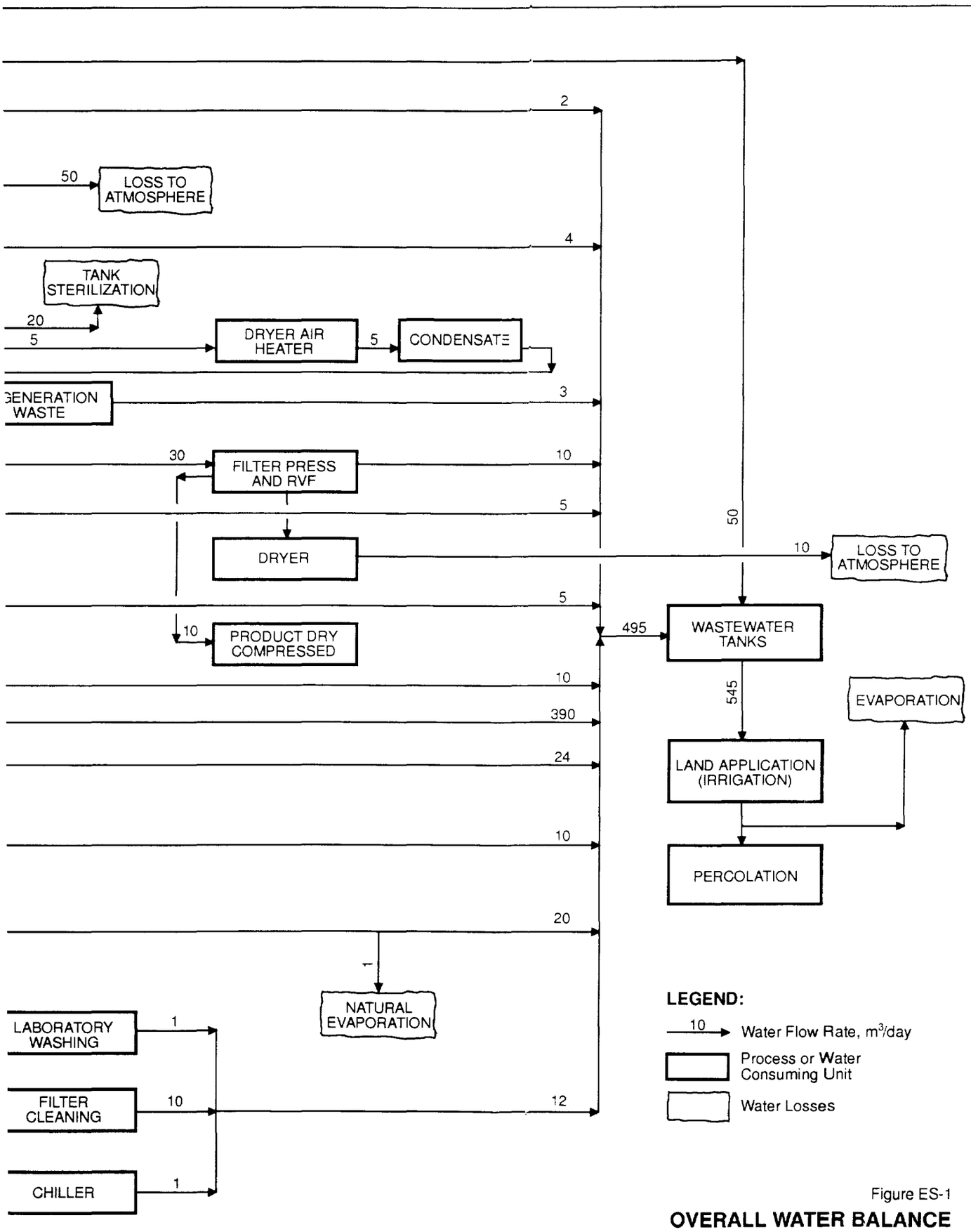

Figure ES-1

OVERALL WATER BALANCE

YEAST INDUSTRIES CO., LTD.
Ruseifa, Jordan

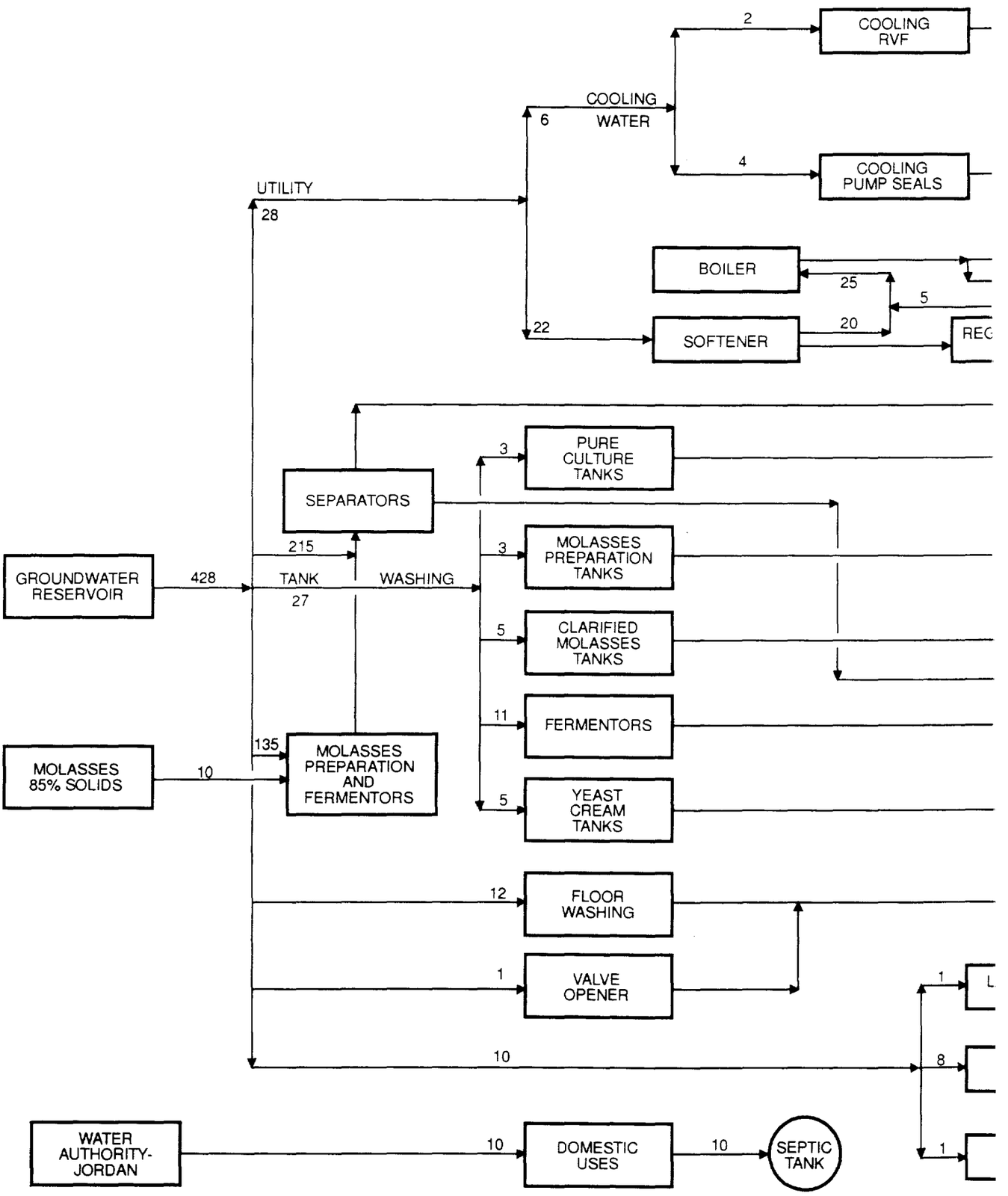

HARZA Consulting Engineers and Scientists

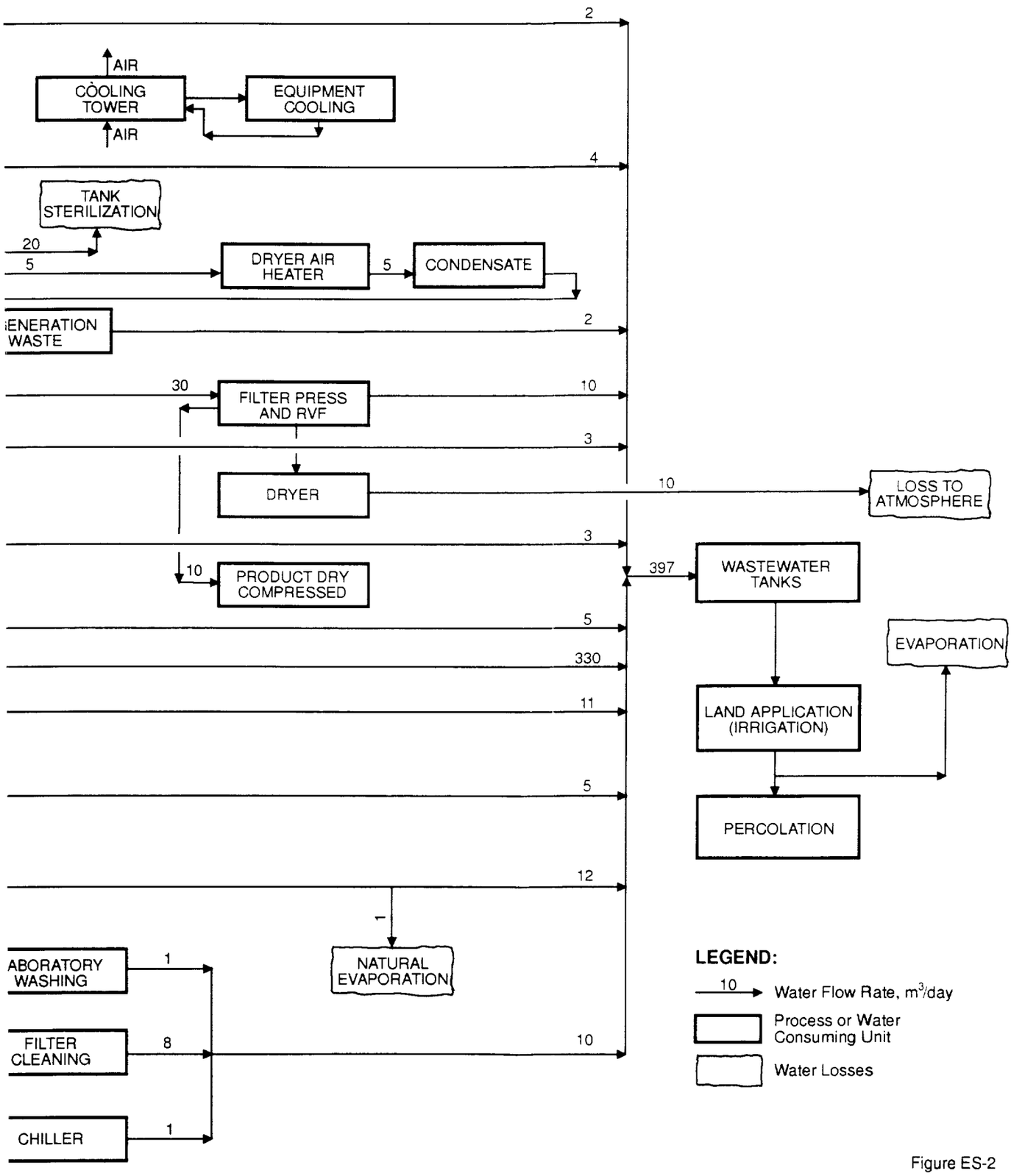

Figure ES-2

CONCEPTUAL WATER BALANCE

YEAST INDUSTRIES CO., LTD.
Ruseifa, Jordan

13

1.0 INTRODUCTION

This report presents the findings of an audit for pollution prevention, waste minimization (PP/WM) and water conservation for the yeast industry in Jordan using the Yeast Industries Co. Ltd. (YIC) as the basis. The report includes project background information and objectives, brief process and facility descriptions, audit process details, potential for PP/WM and water conservation, conclusions, recommendations, and follow-up actions.

1.1 Background

Development Alternatives, Inc. (DAI) under Contract No. 278-0288-00-C-4026-00 with the United States Agency for International Development (USAID) is performing an Industrial Wastewater Discharge Prevention Program (IWDPP) in Amman, Jordan. This Program is one of four components of the Water Quality Improvement and Conservation Project (WQICP) funded by USAID. This program is being performed by DAI with full coordination between the Ministry of Water and Irrigation (MWI) and the Amman Chamber of Industry (Chamber). Harza Consulting Engineers and Scientists (Harza), Chicago, United States (U.S.), was retained by DAI to lead the IWDPP. The Royal Scientific Society (RSS) of Amman, Jordan was selected as a local consultant to assist Harza with the IWDPP. This Program includes conducting the PP/WM audits, feasibility studies, and designing demonstration facilities at selected industrial facilities.

The PP/WM techniques are defined as any techniques to prevent or reduce waste generation by source reduction or recycling activities. These activities must reduce either the volumes or the concentrations of pollutants generated prior to treatment, storage, or disposal of the waste.

Based on a ranking methodology, the PP/WM Committee has selected ten industries with potential needs for PP/WM audits. The purpose of the audits is to assist the industries in the Amman-Zarqa Basin in assessing pollution problems and developing alternative solutions to achieve desired levels of PP/WM, water conservation, and wastewater treatment appropriate for the selected industry. One of these industries is the Yeast Industry. The Harza/RSS team conducted an audit of YIC, representing the first step of the IWDPP. This report summarizes the results of the audit.

1.2 Objectives

The objective for conducting a PP/WM audit of the YIC facility was to understand the water, wastewater, and associated waste management practices currently employed at the facility and to identify opportunities for PP/WM and water conservation that may exist at the facility.

The findings of the audit were used to develop recommendations and follow-up actions to assist YIC in assessing the extent of pollution. Suggested approaches for water conservation and process modifications to achieve additional PP/WM and water conservation are provided.

1.3 The Report

This report contains a description of the yeast manufacturing process, audit procedures, audit findings, opportunities for PP/WM and water conservation and conclusions derived from the audit finding. Recommendations and follow-up actions necessary to assess the extent of pollution as well as to implement PP/WM and water conservation measures at the YIC facility are also included.

Appendices attached to this report include support information obtained during the audit and additional information provided by the industry. Appendix A contains the audit questionnaire used to obtain the necessary information about the facility. Appendix B is a collection of support documentation provided by the YIC. A copy of Harza's Background Material Report, including references, is included as Appendix C. Applicable Jordanian regulatory standards for water quality are included in Appendix D. Photographs taken of the facility during the audit are included as Appendix E.

This audit report provides the information required to conduct a PP/WM and water conservation feasibility study of the yeast industry in Jordan, using YIC as the basis. The findings of the PP/WM and water conservation audit conducted for the YIC facility are presented herein.

2.0 PROCESS AND FACILITY DESCRIPTION

2.1 General

The YIC is located on the north bank of the Zarqa River in an agricultural area near the western perimeter of the Ruseifa, Jordan. The facility, which began production in 1978, produces fresh compressed and dry active baker's yeast. In 1992, the facility produced 2,582 tons of compressed yeast and 865 tons of dry yeast (95 to 98 percent solids) which is equivalent to about 2,600 tons of wet filtered yeast with 30 to 32 percent solids. On a wet basis (about 30 percent solids), YIC produces about 5,200 tons of yeast per year, which is about 87 percent of the facility's total production capacity (6,000 tons per year). The facility operates 24 hours per day and seven days a week and employs about 70 people.

2.2 Facility Description

The facility occupies 10,000 square meters of land and consists of a main production building which houses the fermentors, dryers, packaging equipment and plant offices. Also, there is a small utility building which houses two boilers for process steam production and five air compressors which supply air to the fermentors. Outside of the facility buildings, there are molasses storage tanks, water cooling towers, and an abandoned wastewater treatment plant.

The YIC's production processes is included as Figure 1. As shown on the figure, YIC's operations are typical for a facility having a two-vessel main fermentation stage.

All process water is supplied by groundwater obtained from a private well. The total facility water consumption is estimated by YIC to be about 630 m^3/d, or 150,000 to 180,000 m^3/year. Based upon this water consumption rate, approximately 30 m^3 of water is used to produce one ton of wet yeast product (0.3 ton dry yeast product). The COWI consult/Royal Scientific Society report states that estimated water consumption rate is rather high compared to typical European rates of 30 m^3 of water per ton of dry solid yeast.

Water is also used for cleaning equipment such as machinery and tanks as well to meet the considerable demand for cooling water used in the fermentation process.

The wastewater generated at YIC is currently discharged to a land application farm in cooperation with the local municipality. This practice began when the YIC's wastewater treatment plant failed and the facility had no other outlet to discharge their wastewater.

The YIC facility operations fall into two main categories. They are:

- Yeast Production Operations; and
- Ancillary Operations.

Descriptions for each of these operating areas are provided below.

2.3 Yeast Production Operations

The yeast production process includes five (5) basic unit operations. They are:

- Molasses Preparation;
- Fermentation;
- Product Recovery;
- Product Dewatering; and
- Product Packaging.

Each of these production operations are briefly discussed below.

2.3.1 Molasses Preparation

The primary substrate upon which the yeast culture feeds during the production of yeast is molasses. This carbohydrate provides the energy, as well as several essential nutrients and vitamins, necessary to sustain the fermentation process.

The molasses used is either cane or beet molasses. Raw molasses is diluted with fresh water to reduce its dry matter content from 85 percent to about 35 percent. Once diluted, the water and molasses mixture is sterilized in one of three (3) molasses preparation tanks, each with a capacity of 6.5 m^3. The molasses is then clarified through a cyclone and a centrifuge separator to remove sludge and obtain product clarity. The clarified molasses is stored in a 18 m^3 storage tank for later use in the fermentors to prepare either mother yeast or trade yeast. YIC is in the process of installing an additional 18 m^3 tank for molasses storage.

If the pH of the molasses is too high during the molasses preparation process, bacterial growth will occur, therefore, adjustments to the pH are performed during the preparation process. These adjustments also take place in the sterilization stage, where the pH of the molasses is maintained between 6.0 and 8.0 to prevent carmelization, or burning, of the sugars. Molasses is sterilized using high-pressure steam which raises the temperature to between 38 and 43°C. After sterilization, the prepared molasses is diluted with water. Then the nutrients and vitamins necessary to support yeast growth are added into the molasses substrate. These nutrients and vitamins include:

- Urea;
- Mono Ammonium Phosphate;
- Magnesium Sulfate;
- Potassium Chloride;
- Vitamins (C, B1, B6 and nicotinic acid); and
- Zinc Sulfate.

Based on the production mass balance, it is estimated that between 29 and 30 tons of dry

molasses (15 percent moisture) is used daily to produce between 15 and 18 tons of yeast. For dilution and clarification, about 150 m^3/day of fresh water is used. About 1.0 m^3/day of water is used to operate a valve used to discharge sludge from the centrifuge separator.

2.3.2 Fermentation

Yeast is grown in a series of fermentation vessels, or fermentors. The process begins by placing a small "starter" portion of yeast culture into the molasses substrate and allowing it to grow. Yeast is propagated when the yeast mixture is placed into the next fermentation vessel, which is equipped for batch feeding of the molasses. Each of the fermentation stages, the flask stage, the pure culture stage, and the main fermentation stage, is described in greater detail below.

Flask Stage. The first stage in the fermentation process typically occurs in a laboratory where a small portion of yeast is mixed with the molasses substrate in an Erlenmeyer flask. The total contents of the flask are typically two liters (l) in volume. The yeast is allowed to grow in the flask for two to four days.

The "starter" portion is pure culture. The pure culture is an active strain of the yeast microorganism which have typically been cultivated in a laboratory.

Pure Culture Stage. The pure culture stage is a continuation of the flask stage, except that the pure culture fermentation has provisions for sterile aeration and aseptic transfer to the next fermentation stage. Sterilization is critical. If a sterile environment is not provided, contaminating microorganisms can easily outgrow the yeast.

The starting culture, grown in a laboratory, is added to the sterilized nutrient solution (water, molasses and nutrients) in the pure culture tank (9.0 m^3 capacity) and allowed to ferment for 24 hours. Subsequently, the contents of the pure culture tank are transferred to one of the two main continuous-feed fermentors. YIC is in the process of installing an additional 9 m^3 pure culture tank.

Main Fermentation Stage. In the main fermentors, mother yeast is prepared by gradual and continual feeding of sterilized fresh water, clarified liquid molasses and nutrients (urea, mono ammonium phosphate, potassium chloride, magnesium sulfate, and vitamins) to the pure culture and allowing the yeast to grow under aerobic conditions until maximum cell multiplication is attained.

Temperature of the fermentor contents is maintained at a constant 30°C by circulating the contents of the tank through a heat exchanger unit.

This process of cell multiplication, requires a maximum of 26 hours to complete. When the process is completed, the 80 m^3 fermented batch is clarified by passing through a

centrifuge separator. The recovered yeast mass is then washed with water and clarified in two subsequent stages using centrifugal separators similar to the Stage 1 separator. In all three stages of separation, approximately 65 m^3 of water is used per separator per batch. Since about two fermentor batches are processed each day approximately 390 m^3 of washwater and molasses water are generated per day. The separated yeast cream, called "mother yeast cream", is then stored between 2 and 3°C in a 19 m^3 cold storage tank. The resulting yeast cream is used as an inoculate for the production of six (6) generations of trade yeast.

The YIC has two main fermentors, each with a holding capacity of 110 m^3. Each batch processed, produces about 80 m^3 volume.

2.3.3 Product Recovery

The trade yeast is the final product. The same fermentation and separation processes discussed in Section 2.3.2 for mother yeast cream preparation are repeated to produce trade yeast cream. The dry matter content of the trade yeast cream is about 15-20 percent by weight. Trade yeast cream is stored in three cooled tanks (19 m^3 each) similar to the mother yeast cream tank. The YIC is planning to add an additional 19 m^3 trade yeast storage tank. The total water usage, process sequence and wastewater generated for fermentation and product recovery operations are similar. The wastewater characteristics may vary somewhat depending upon whether the mother yeast or trade yeast is being produced.

2.3.4 Product Dewatering

The process use in product dewatering depends on whether, compressed yeast or dry yeast is produced. The dewatering steps for each product are described below.

Compressed Yeast (Fresh Yeast). As previously stated, compressed yeast product has a moisture content of approximately 70 percent, which is equivalent to a solids content of 30 percent. However, yeast recovered from the main fermentation stage (trade yeast cream) has a solids content of only approximately 20 percent. Therefore, filtration is used to increase the solids content of the yeast.

Rotary vacuum filters are used to dewater the yeast cream. The outside of the filter drum is coated with potato starch and salt to aid in the drying process. The yeast is applied to the filters' rotary drum by spraying the yeast directly onto the drum. A vacuum is applied to the inside of the drum and as the drum rotates, blades at the trough remove the yeast. The yeast from the rotary vacuum filters has a solids content of approximately 28 to 30 percent.

Dry Yeast. Dry yeast is produced by filtering the trade yeast cream through a filter press to produce a product with a solids content of approximately 30 to 32 percent. The

yeast is then removed from the filter press, ground and passed through an extruder (screen) and dried using a fluidized bed dryer.

Hot air is used to dry the yeast. The air is heated using an indirect contact heat exchanger and steam. Condensed steam is recycled to the boiler. The dried yeast contains about 98 percent solids and less than 2 percent moisture.

2.3.5 Product Packaging

Fresh yeast and dry yeast are packaged separately. The fresh yeast is removed from the rotary vacuum drum and processed through an extruder where it is compressed into 1/2 kg cakes. The 1/2 kg cakes are then individually wrapped and packaged.

The dry yeast product is removed from the drier then transferred to a packaging machine where it is vacuum packaged in either 1 kg brick packages, 500 gram brick packages, 25 kg bags packed at atmospheric pressure, or 100 gram packages packed under nitrogen flush. The final product is approximately 95 to 98 percent solids.

2.4 Ancillary Operations

To support the commercial production of yeast, a number of ancillary operations are necessary. These operations include equipment cleaning and sterilization, steam production, equipment cooling, facility housekeeping, and wastewater treatment. Each of these operations are described below.

2.4.1 Equipment Cleaning

Throughout the yeast production process, sterilize conditions are an absolute necessity. If a foreign culture is present inside a reaction vessel, it is likely that its propagation will rapidly overtake the yeast and spoil the batch. Sterile conditions are also critical given that yeast is a food product and any foreign cultures present in the final product may be consumed by human beings.

To assist in assuring sterile conditions, all transfer lines and reaction vessels are thoroughly cleaned and steam-sterilized on a routine basis. Additionally, the raw materials which make up the fermentation substrate, such as the molasses, are sterilized prior to their introduction into the process.

At the YIC facility, all equipment is fully washed, cleaned and sterilized using hot water, steam and caustic soda after each batch process. The following equipment are cleaned on a routine basis:

- Molasses Preparation Tanks;
- Clarified Molasses Storage Tanks;

- Fermentors;
- Yeast Cream Storage Tanks;
- Filters; and
- Wastewater Treatment Plant.

The typical cleaning sequence used for each equipment is discussed below:

Molasses Preparation Tank Cleaning. The cleaning sequence for each molasses preparation tank is as follows:

5 min - water wash;
5 min - caustic wash (CIP); and
5 min - water wash.

The YIC has three (3) Molasses Preparation Tanks, each with 6.5 m^3 capacity. Each tank is generally washed once per day.

A cleaning-in-place (CIP) system is used for the caustic wash. Approximately 0.85 m^3 of water is generated per wash per tank or about 1.7 m^3 of washwater is produced per tank per wash sequence.

Clarified Molasses Storage Tank Cleaning. The cleaning sequence for each clarified molasses storage tank is similar to that for the molasses preparation tanks discussed above. However, due to the greater tank capacity, the washwater requirements are greater. Although the actual water volume is not monitored, it is estimated that about 5 m^3 of water is required for each wash. Assuming equal volumes for the first and second wash, 10 m^3 of washwater is generated per wash.

Fermentor Cleaning. The cleaning sequence for each fermentor is as follows:

15 min - cold water;
30 min - caustic wash (CIP);
15 min - cold water; and
120 min - steam sterilization.

Each tank is washed once per day. The steam is vented to the atmosphere. The reported washwater volume per tank per event is 12 m^3. The total washwater generated from two tanks is 24 m^3/day.

The pure culture tank is also washed using a similar procedure and generates about 5 m^3 of washwater per day.

Yeast Cream Tank Cleaning. The washing sequence for each yeast cream storage tank is similar to the fermentor cleaning sequence, except that steam sterilization is conducted

for 60 minutes rather than 120 minutes. At least 2 tanks are cleaned once per day.

The washwater generated per tank is about 5 m^3 per wash sequence. The total washwater generated is about 10 m^3/day for two tank washings.

Filter Cleaning. The rotary vacuum filter is cleaned twice per day and the filter press is cleaned once per week. This generates between 10 and 11 m^3 of wastewater per day.

Wastewater Treatment Plant Cleaning. Each day after pumping the collected wastewater to the land application farm, the piping and storage tanks at the abandoned wastewater treatment plant are washed using approximately 50 m^3 of water.

2.4.2 Steam Production

Steam is produced for equipment and raw material sterilization using a packaged boiler fired with fuel oil.

Boiler makeup water is passed through a water softener unit prior to use. Sodium chloride is used to regenerate the softener.

2.4.3 Equipment Cooling

The fermentors and yeast cream storage tanks require cooling due to the production of heat during the fermentation process. The molasses liquor is cooled by continually circulating it through a heat exchanger through indirect contact with cold water. The cooling water is inturn cooled through a cooling tower. Each fermentor at the YIC facility has its own heat exchanger and cooling tower.

The cooling water loses heat through evaporation at the cooling tower. Based on the estimated makeup cooling water volume and reportedly no cooling tower blowdown, 50 m^3 per day water is lost through cooling water evaporation.

Cooling is also required to maintain low temperatures (2-3°C) in the yeast cream storage tanks. A closed-loop freon refrigeration system is used to cool the cooling water used to cool the yeast storage tanks.

2.4.4 Facility Housekeeping

Facility housekeeping procedures include routine janitorial services, and floor and equipment washing. The wastewater generated from these washdowns contain a high organic content due to residual yeast materials.

In addition to the chemicals used during the production process, caustic soda is used for cleaning purposes.

2.4.5 Wastewater Treatment

The YIC has a wastewater treatment plant which is presently abandoned. The plant has a 300 m^3 activated sludge aerobic wastewater treatment system, a 600 m^3 equalization tank, a 100 m^3 clarifier, and some small chemical tanks. Reportedly, the plant had never operated to it's full capacity.

In lieu of using an onsite wastewater treatment plant, YIC operates a land application farm where the facility industrial wastewater is discharged. This practice began in 1986 in cooperation with the local municipality. In 1986 the land, approximately 1,000,000 square meters, was barren, rocky and unused. YIC installed a 4-inch diameter distribution pipe from the plant to the farm, approximately 3 km in distance. Three tanks (15 m^3 capacity each) were installed at the land application farm for surge capacity. The distribution piping was installed to distribute the wastewater by gravity to all parts of the farm. When the process of land application began, YIC actively began to plant trees and grass on the farm. Currently, much of the land application farm is covered with grass and sparsely vegetated with various types of trees.

As wastewater is generated throughout a production day, it is temporarily stored in tanks at the abandoned wastewater treatment plant. During the morning hours, the plant pumps the previous day's wastewater to the surge tanks at the farm and the wastewater is applied to the land. All application of the wastewater occurs between the hours of 7 am and 3 pm. The application of the wastewater is controlled with valves to discharge the wastewater over the greatest area possible. Municipal workers work with YIC personnel to control the discharge of wastewater at the farm. When pumping the wastewater is complete, approximately 40 to 50 m^3 of fresh water is pumped into the tanks at the abandoned wastewater plant for cleaning and flushing. This wastewater is then pumped to the land application farm.

2.5 Raw Material Usage

The YIC's annual consumption of chemicals and fuel oil are presented in Table 1.

2.6 Current Environmental and Maintenance Programs

The current and anticipated environmental programs at YIC include the following:

- Conserving chemicals and reducing pollution discharge through CIP systems for the caustic soda wash.

- Conserving and reducing pollution discharge by using steam sterilization rather than a chemical/water mixture.

23

- Optimizing the fermentation process by replacing manual operations with automation.

- Selling boomed salts for commercial use.

- Investigating the use of a "Decanter" device to reclaim sugars from the molasses sludge. This will reduce organic pollutants in the sludge disposed.

- Optimizing nutrient doses used for yeast growth.

- Relocating the filter press to avoid spills of yeast and loss of filter cake.

- Installing a new fresh yeast packaging line to reduce loss of fresh yeast during packaging operations.

2.7 Environmental Regulations and Guidelines

Jordan currently has no comprehensive law to control water, air and soil pollution. However, industrial wastewater discharges are regulated by the Jordanian Standard 202, adopted in 1981 by the Department of Standards and Specifications and revised in 1990. Standard 202 regulates industrial wastewater discharges to rivers, wadis, groundwater, the sea, and reuse for irrigation.

Drinking water quality is regulated by Jordanian Standard 286. Moreover, it is a common practice to use the Food and Agriculture Organization (FAO) guidelines as a reference. Appendix D contains further discussion and summary tables for these regulations and guidelines.

Also included in Appendix D are regulations governing discharge of industrial and commercial wastewater connected into the sanitary sewer system.

3.0 AUDIT PROCESS

The objective for the audit was to identify the potential for PP/WM, wastewater treatment, and opportunities for water conservation appropriate for YIC. The following subtasks were undertaken to complete the audit report.

- Audit Coordination;
- PP/WM Background Material Preparation;
- Pre-Inspection Meeting;
- Audit;
- Post-Inspection Meeting; and
- Audit Evaluation Report.

Activities conducted under each of the subtasks are briefly described below.

3.1 Audit Coordination

The Chamber informed YIC about the intent and schedule of the audit. An audit questionnaire specifically developed for this PP/WM project (Appendix A) was included with the request that YIC fill out the questionnaire prior to the audit. The YIC was also requested to furnish an overall flow balance and a process description. Available information (Appendix B) was furnished by YIC to the audit team during the audit including the following:

- Estimated Plant Discharges;
- Process Flow Diagram;
- Process Description;
- Steps taken to minimize waste at YIC;
- A copy of the paper presented by Mr. Remon Halteh;
- A copy of the WEC Report dated June 3, 1992; and
- A copy of the 1980 Malcolm Pirnie Report.

3.2 PP/WM Background Material Preparation

The objective of preparing the Background Material Report was to identify the currently available techniques and "state-of-the-art" technologies being practiced for PP/WM and water conservation for breweries in the U.S. and elsewhere in the world. This objective was achieved by performing a comprehensive literature review.

The literature review included the following sources: PP/WM related articles conference proceedings, books on pollution types and control, and journal articles. In addition to the literature review, in-house technical expertise at Harza contributed to the content of this report. Based on the facility operation information that was made available to the audit team and the information gathered through the available literature, Harza prepared the Background Material Report (Appendix C). This report includes general information on the yeast industry as well as

specific information on the process used by YIC.

Harza also prepared a report which included appropriate reference material gathered during the literature search. This report, submitted separately, contains process and waste management practices used in similar facilities, primarily in the U.S.

3.3 Pre-Inspection Meeting

The YIC facility audit was conducted on March 11, 1995. The initial audit team consisted of the following personnel:

Eng. Rania Abdul Khaleq	Ministry of Water and Irrigation
Eng. Marwan K. Tal	Water Authority of Jordan
Dr. Shawn Niaki	Program Director, DAI (Harza)
Mr. Krishna Mayenkar	Lead American Consultant (Harza)
Dr. Riyad Musa	Local Consultant, RSS
Dr. Omar Jabay	Local Consultant, RSS

The representatives of the YIC facility included:

Mr. Remon B. Halteh	General Manager
Mr. Samir Jouaneh	Production Manager

The pre-inspection meeting was held at YIC offices on March 11, 1995. The intent of this meeting was to inform YIC staff about the objective of the audit and also for YIC staff to present process details as they relate to fresh water utilization, wastewater generation, wastewater treatment and disposal, water recycling and reuse, and overall water management at the facility. The audit team explained the purpose of the audit to YIC personnel. Mr. Jouaneh provided the audit team a detailed description of the yeast processes, raw materials usage, products, wastewater sources treatment processes.

3.4 Audit

The facility audit was conducted on March 11 and 14, 1995 and again on March 18, 1995. The YIC facility designated Mr. Samir Jouaneh to assist the audit team in touring and inspecting the facility.

On the first day, the audit team toured the entire facility including current land treatment areas. Mr. Jouaneh explained all processes and operations from molasses preparation, fermentation, and final packaging. The audit team then visited the currently abandoned wastewater treatment facility and land application farm which YIC uses to apply wastewater for treatment and plant growth.

Upon completion of the facility tour, Mr. Jouaneh and Mr. Mayenkar continued discussion on

the overall water usage and wastewater management practices currently employed. Some of the specific details, however, remained unanswered during the audit.

Dr. Riyad Musa visited the facility again on March 14, 1995. During this visit, Dr. Musa discussed water usage in different operations, cleaning operations, cooling system, housekeeping and also air emissions and solid waste management practices at the facility. Mr. Jouaneh provided the requested information as much as he could based on the established operational practices. Because most of the water usages are not metered or monitored, it was difficult to estimate water consumption for a specific operation.

On March 18, 1995, Ms. Khaleq, Dr. Musa and Mr. Mayenker visited the facility again at which time they collected grab samples of the final wastewater effluent and the three separator effluents. The samples were analyzed for Biochemical Oxygen Demand, Chemical Oxygen Demand, Total Suspended Solids, Total Volatile Solids, Ammonia Nitrogen, Total Nitrogen, and Total Phosphate.

The audit team also conducted cursory treatability studies on the separator effluents and final effluent. Lime, ferric chloride, alum and hydrogen peroxide reagents were tested. Based on the previous results of suspended solids concentrations in these discharges, chemical doses were adjusted to 20 percent. Peroxide and lime/alum combinations were tested only on the Separator #3 effluent.

3.5 Post-Inspection Meeting

During the post-inspection meeting held on March 11, 1995, YIC staff and audit team members reviewed general facility operations and discussed their preliminary impressions regarding PP/WM and water conservation opportunities at YIC. The facility staff were very responsive to the audit team's requests and agreed to help and provide additional data, as necessary.

The information and waste management analyses in the subsequent sections of this report are based on the knowledge gained through audit activities and support provided by YIC staff.

4.0 Audit Findings

The information obtained during the facility audit through personnel interviews, discussions with YIC staff, site observations, and technical data supplied by YIC was compiled and thoroughly reviewed. The findings are presented below.

4.1 Overall Water Usage and Balance

Water used for industrial purposes at YIC facility is obtained from a private groundwater supply well. The facility uses this water for (as a percentage of total fresh water consumed):

- Process Operations (66%);
- Equipment Cleaning (18%);
- Cooling (9%);
- Sterilization (3%);
- Floor Washing (3%); and
- Regeneration and Other (1%).

Water used for domestic purposes in entirely supplied by WAJ. An overall water balance across the facility is presented in Table 2 and is illustrated on Figure 2.

Based on the YIC water balance, process operations, equipment cleaning and cooling constitutes 93% of the water usage.

4.2 Wastewater Sources and Discharges

For the water uses discussed in Section 4.1, the major wastewater sources and discharges at the YIC facility include:

- Process Wastewater;
- Equipment Cleaning Wastewater;
- Floor Washwater;
- Cooling System and Regenerant Wastewater; and
- Domestic Wastewater.

Each of these wastewater sources and discharges are summarized in Table 3 and are discussed below.

4.2.1 Process Wastewater

Process wastewaters are generated primarily from yeast washing and yeast separation processes. The majority of process wastewater is generated when the fermented liquid is centrifuged to recover yeast and when this yeast is washed with water to remove residual molasses substrate. A minor portion of process wastewater results from

dewatering of the trade yeast cream to recover the final yeast product.

The YIC operates three centrifuge separators. The first separator stage removes the molasses liquid and generates the most concentrated wastewater. The second wash stage generates the same volume of wastewater as the first stage but the organic load is about 15 percent of the first separator effluent. The second stage wash generates the same volume of wastewater but the organic load is about 20 percent of the first stage washwater or 4 percent of the first separator effluent. At each stage about 65 m^3 of wastewater is generated per batch per wash. The comparison of characteristics of wastewater effluent from each of the three separators is presented in Table 4.

The filter press and rotary vacuum filter each generate about 5 m^3/day of filtrate. Although volumetrically this represents less than 2 percent of the total wastewater discharge, characteristically the filter press filtrate resembles Separator #2 (Stage I) effluent and the rotary vacuum filtrate shows characteristics between that of the Stage I and II effluents. Summary data for the filter press and rotary vacuum filter effluent is included in Table 5 and 6, respectively.

The total volume of process wastewater generated from the separation, washing and filtration is about 400 m^3/day. These discharges constitute the major portion (74%) of the total facility industrial wastewater discharge. It should be noted, however, that none of the process wastewater meet the criteria required for discharge to the As Samra Wastewater Treatment Plant.

4.2.2 Equipment Cleaning Wastewater

Equipment cleaning wastewater constitutes the second largest wastewater discharge at the YIC facility. On a daily basis, the facility cleans molasses preparation tanks (3), molasses storage tank (1), pure culture tank (1), fermentors (2) and yeast cream storage tanks (2), and the wastewater treatment plant. The rotary vacuum filter is cleaned twice a day and the pressure filter is cleaned once a week.

About 114 m^3/day of wastewater is generated per day from equipment cleaning operations. This constitutes about 21% of the total facility industrial wastewater discharge.

4.2.3 Floor Washwater

Floor and laboratory washing generate 21 m^3/day of wastewater or about 4% of the total facility industrial wastewater discharge. Although wastewater characterization data is not available, floor washwater is expected to contain yeast, spilled chemicals, and other organic materials resulting in moderate organic loading.

4.2.4 Cooling System and Regenerant Wastewater

Cooling system wastewater and regenerant wastewater contribute 6 m^3/day and 3 m^3/day, respectively, to the total facility industrial wastewater discharge. Although this constitutes less than 2 percent of the total wastewater discharge, these wastewaters generally contain relatively high inorganic dissolved solids.

4.2.5 Domestic Wastewater

Domestic wastewater is generated at a rate of approximately about 10 m^3/day at YIC from a total facility staff of about 70 personnel. Comparing general industrial domestic water use of 0.06 m^3 per capita per day, the reported water consumption appears to be rather high.

4.2.6 Total Wastewater Discharge

Industrial Wastewater. The total facility industrial wastewater discharge, including 50 m^3/day of water used to flush the wastewater treatment plant, amounts to about 545 m^3/day. All the industrial wastewater is discharged to an onsite land treatment farm except for a portion which is lost due to evaporation. The average characteristics of the final industrial wastewater discharge, as reported in 1991, is presented in Table 7. The final effluent characteristics data provided by WAJ for 1990 through 1993 is presented in Table 8.

Although YIC has performed some studies in association with Jordan University concerning landfarming or land application treatment for industrial wastewater, the physical system as it is operated today does not appear to have been designed to meet certain minimum criteria. During our visit, it was very apparent that the distribution of wastewater over the landfarm area was very poor. Plastic pipes and hoses distributing wastes did not follow any particular pattern. Piping spacing seems to be arbitrary. Soil did not appear to have been cultivated or turned. At several places pungent odor due to biodegradation was observed. Gullies were formed and wastewater was flowing through gullies rather than being evenly distributed. No engineered grading was evident. The water applied followed natural grade. There were pools of wastewater indicating possible leaks in the distribution system. In summary, the landfarming techniques did not appear to have been implemented following specific criteria and wastewater application rates.

Domestic Wastewater. All of the domestic wastewater generated at YIC is discharged to an onsite septic system. The septic system, as we understand, are unlined excavations where human and other wastes are anaerobically biodegraded, while liquid percolates through the subsurface soil. The accumulated sludge is transported offsite periodically by authorized waste haulers and disposed at a permitted facility.

4.3 Miscellaneous Water Losses

A considerable amount of water is lost due to evaporation. Evaporative losses and miscellaneous water losses at YIC include:

- Cooling Tower Evaporation;
- Sterilization Steam Losses;
- Dryer Exhaust;
- Product Moisture; and
- Other Evaporative Losses

The water losses through evaporation, fugitive steam, and product correspond to approximately 16% of the total wastewater discharge. These wastewater losses are summarized in Table 9.

4.4 Storm Water

All storm water is discharged to a nearby Wadi through natural grade. Storm water is expected to contain primarily suspended solids since the audit team did not observe noticeable liquid or solid spills or leaks during the audit visit.

4.5 Solid Wastes

The solid wastes generated at the YIC facility include:

- Yeast recovered through the dryer exhaust cyclone;
- Packaging materials (wax paper, aluminum foil, cardboard);
- Empty plastic bags;
- Empty plastic carboys;
- Broomed salts;
- Domestic wastes; and
- Automobile tires.

The YIC disposes most solid wastes at a local landfill. However, plastic bags are given away and broomed salts are sold to the public. A summary of the volumes of solid waste generated at the YIC facility are included in Table 10.

4.6 Air Emissions

There are four notable sources of air emissions at the facility. They are:

- Fermentors;
- Steam Plant Boiler;
- Fluidized Bed Dryer; and
- Abandoned Wastewater Treatment Plant.

Each of these sources of air emissions are discussed below.

4.6.1 Fermentors

The greatest potential source of air emissions is the fermentors. Volatile organic compounds (VOCs) are generated by the metabolic activity in these vessels and are ultimately released to the atmosphere. Ethanol, which is formed from acetaldehyde, and carbon dioxide are of particular concern.

The USEPA estimates the VOC mass emission rate from a typical yeast production facility at 82 megagrams per year, primarily from the trade fermentors. This rate corresponds to 0.0005 kg of VOCs per liter per batch of fermentor operating capacity.

4.6.2 Steam Boiler

A variety of air pollutants could potentially be emitted from combustion of fuel in the boiler. The quantity and characteristics of the emissions produced depends upon the type of fuel used and the efficiency of the boiler. However, typical emissions usually include sulfur and nitrogen oxides.

4.6.3 Fluidized Bed Dryer

The fluidized bed dryer is a potential source of air emissions. The dryer suspends moist yeast on a bed of air to further dry the yeast product. During this process vapors and fine particulate matter may be emitted.

The particulate emissions from the fluidized bed are reduced at YIC by passing the exhaust air and vapors through cyclone separators. The recovered yeast is disposed in a local landfill.

4.6.4 Wastewater Treatment Plant

The abandoned onsite wastewater treatment plant is currently used as a temporary wastewater storage facility until the wastewater is pumped to the land application farm. The observations made by the audit team at the land application farm are presented in Section 4.2.6. With respect to air emissions, the audit team observed some odor during the audit visit. Since the industrial wastewater at YIC contains high amounts of organics including ethanol, sugars, urea etc., microorganic metabolic activities result in emissions of organics. The odor observed by the audit team was an indirect indication that such activities may be occurring.

4.7 Treatability Test Results

Preliminary wastewater treatability tests were conducted on March 18,1995 at YIC laboratories using wastewater samples from Separators #1, #2 and #3 effluents as well as the final wastewater effluent. The results are presented in Table 11. Due to the limited time constraints, pH, COD and TSS were selected as test parameters. Our review of the results indicated the following:

- None of the coagulants showed promising results for Separator #1 effluent.
- All coagulants tested showed excellent COD and TSS removals for Separator #2 effluent.
- Lime, iron salt and alum showed good TSS removal but poor COD removal for Separator #3 effluent.
- Lime and alum combined, as well as hydrogen peroxide alone, indicated between 70 and 75 percent TSS and COD removal for Separator #3 effluent.
- It appeared that at higher pH levels, sedimentation was more effective not necessarily from metal hydroxides but from certain reactions taking place. The nature of these reactions is unknown at this time.

In summary, cursory studies indicate that it is prudent to further explore the use of lime and alum combination and peroxide coagulants to reduce oxidizable hydrocarbons and suspended solids in the industrial wastewater effluent.

The audit team also collected grab samples of the final combined wastewater and effluents from Separators #1, #2 and #3. The samples were analyzed for BOD_5, COD, TSS, NH_3-N, T-P and pH. Results are presented in Table 12. These results were compared with the previous results presented in the WEC report (reproduced as Tables 4 and 7 in this report). The comparison indicates that BOD_5 and COD results were higher than average for the final effluent, and Separator #2 effluent. The results were lower than average values reported for Separator #1 effluent but were comparable for Separator #3 effluent. For ammonia and TSS, the result were generally higher than the past reported values.

4.8 Data Gaps

There are two general areas of data gaps identified during the audit. They are:

- Lack of water and waste quantity information; and
- Lack of systematic water and waste quality information, although some data has been collected by WAJ and YIC for the final effluent, separator discharges and filtrates, which are available in the WEC report.

This information is basic for developing the most cost-effective waste minimization and water conservation measures. Specific data gaps noted are as follows:

- Water utilization rates and total water quantities used for all the applications and operations identified in Table 2.

- Total effluent quality data and individual wastewater source quality data.

- Specific wastewater data from the following sources:

  - Individual Composite Samples from Separators #1, #2 and #3 effluents;
  - Composite Filtrates;
  - Composite Tank Cleaning Wastes;
  - Composite Filter Wash; and
  - Composite Final Effluent.

- Wastewater monitoring data for the following parameters:

  - pH;
  - Biochemical Oxygen Demand (BOD_5);
  - Chemical Oxygen Demand (COD);
  - Total Suspended Solids (TSS);
  - Total Dissolved Solids (TDS);
  - Total Volatile Suspended Solids;
  - Ammonia Nitrogen;
  - Total Nitrogen; and
  - Total Phosphate.

5.0 Pollution Prevention/Waste Minimization Potential

The terms pollution prevention and waste minimization are sometimes used interchangeably, but each term has a different meaning. Pollution prevention means to prevent pollution from occurring in the first place. It costs 10 to 100 times more to treat pollution once it is created than to avoid generating it. By employing waste minimization techniques, less pollution will be created, thus reducing the cost of treating the same.

5.1 Pollution Prevention/Waste Minimization - Water

As discussed in Section 4.0, the primary industrial wastewater discharges are (as a percentage of total wastewater generated):

- Process Wastewater (74%);
- Equipment Cleaning Wastewater (21%);
- Floor Washwater (4%); and
- Cooling Water and Regenerant Wastewater (1%).

To achieve reduction in pollution through waste minimization, we believe that the major focus should be on process wastewater, equipment cleaning wastewater and floor cleaning wastewater. Regenerant waste and cooling wastes are generated in very small quantities and it may or may not be cost effective to invest in modifying the ion-exchange system.

The available PP/WM opportunities related to wastewater are discussed below:

5.1.1 Process Wastewater

As discussed in Section 4.2.1, the effluent from Separator #1 contributes the largest organic loading because it is composed of primarily fermented molasses substrate. The pollution load from Separator #1 can be reduced only by process modifications. Some of the recommendations are discussed below.

Engineering Controls. Based on available information, the fermentation process and raw material additions are conducted manually. Due to minimal instrumentation, the process controls are not precise. The YIC sometimes experiences large deviations in the final product yield. This also affects the wastewater quality. If excess organic material or nutrients are added to the batch and are not consumed during the fermentation process, it will be discharged as wastewater through Separator #1 effluent and to some extent through other separator effluents. Excess molasses will naturally exert high BOD_5. Excess urea and ammonium phosphate will be detected by elevated concentrations of ammonia, nitrogen, phosphates, etc.

The YIC is currently optimizing the fermentation process through instrumentation, controls and automation. We recommend that the YIC install state-of-the-art controls to

monitor chemical additions. This change will not only control fermentor batch quality but will also control air emissions of ethanol and other hydrocarbons. If the current process optimization program includes the change of mode of operation, it will certainly assist YIC to control molasses and chemical additions to reduce excess materials discharged through separator effluents.

Alternative Fermentation Method. The YIC currently uses a batch fermentation process. We recommend that the YIC convert to an incremental-feed fermentation system. Using an incremental-feed fermentation system will maximize the yeast yield from a given amount of substrate and will require less raw materials. As a result, the wastes generated during production can be minimized.

Alternative Yeast Washing Method. The YIC can explore counter-current yeast washing method rather than the current method which involves using two washing stages. Although this should not have an impact on the organic load, the amount of water required could be reduced by 10 to 15 percent from the existing yeast washing method.

Miscellaneous Methods. There are other management options available, however, these options may not currently be cost effective to implement. One of such options is to segregate Separator #1 effluent from Separator #2 and #3 effluents. The concentrated wastewater from Separator #1 can be subjected to vapor-compression evaporation to recover steam and water which can be recycled and reused. The concentrated molasses sludge can be dried using sludge drying beds and landfilled or, if possible, sold to other industries which can use the sludge.

The Separator #2 and #3 effluents can combined with other dilute wastewaters and can appropriately be applied to the landfarm.

5.1.2 Equipment Cleaning Wastewater

Equipment cleaning wastewater is generated from tank cleaning, wastewater treatment plant cleaning and filter cleaning. The organic and inorganic loads generated from washing operations can only be minimized by reducing the cleaning frequency, if feasible. For example, yeast cream storage tanks can be washed after two batches instead of after every batch. Similarly, the clarified molasses storage tanks can be washed after two or three batches instead of after each batch.

Equipment washing operations should be carefully evaluated. Each rinse and washwater sample should be taken to determine the quality. A thorough analysis of the washing sequence and washing objectives will allow YIC to optimize washing operations.

We do not see any options by itself to reduce the organic load from the wastewater conveyance pipe cleaning.

5.1.3 Floor Washwater

Dry materials and yeast on the floor can be removed by sweeping floors and using a dry vacuum system where possible before washing floors with water. Good housekeeping practices will help minimize accidental spills and reduce the necessity for floor washing. A planned preventive maintenance also will help to reduce machinery breakage and the incidence of spills.

YIC is in the process of installing a new fresh yeast packaging line to reduce lost yeast and the yeast filter press is being relocated to reduce yeast spills and the loss of filter cake.

We recommend that the YIC establish a planned maintenance program, develop cleaning protocols and procedures and adopt good housekeeping management policies.

5.1.4 Regenerant Wastewater

Regenerant wastes, can be reduced if the sterilization steam is recovered, condensed and reused to reduce the makeup water volume and reduce regenerant waste generation. Although regenerant waste contributes approximately 1% of the total facility industrial wastewater, we recommend that YIC review a series of new ion-exchange (IX) resins and new technologies available in the market. If they are cost effective, the YIC should use them to reduce TDS in the regenerant wastes. The new systems are discussed below:

New IX Resins and Regenerating Chemicals. A series of IX resins have been developed to improve demineralization, improve performance and reduce chemical use in IX modules. The resins are characterized by excellent physical strength as well as high capacity and regeneration efficiency. These resins could potentially reduce chemical usage and TDS loading. With these resins, the current practice of using HCl and NaOH for regeneration can be substituted with more environmentally friendly chemicals like acetic acid and ammonium hydroxide. Sybron Chemicals of Birmingham, New Jersey (US) has developed such resins.

New IX System. New compact IX systems have been introduced into the market which require less chemicals and generate less regenerant wastewater. ECOTECH, located in Schaumburg, Illinois (U.S.) has developed such a system. The YIC should explore the feasibility of installing such as a system.

5.1.6 Industrial Wastewater Treatment

We have discussed some of the available options for YIC to explore to reduce pollution by waste minimization and process modifications. Some of the items are currently being implemented by YIC.

We believe that even with implementation of the above discussed PP/WM options, the total pollution load may not be reduced by more than 15 to 20 percent because the basic raw material, molasses and fermented products, contribute 90 percent of the organic load. The reduction of molasses by process optimization and reduction in cleaning frequency, as previously discussed, will have some impact on waste minimization. However, since the basic philosophy of PP/WM is to reduce the pollution discharged into the environment, we strongly believe that in the case of YIC, a proper cost-effective end-of-pipe treatment should also be considered as a PP/WM measure keeping in mind a broader and regional consideration.

There are several concepts, the YIC can consider. Several of them are as follows:

1. Segregate Separator #1 effluent and other wastes. Install an on-site anaerobic wastewater system to treat only Separator #1 effluent. Combine the treated Separator #1 effluent with the remaining wastewater and use a properly designed land treatment for the combined waste.

2. Segregate Separator #1 effluent and use vapor compression evaporation or a French Overcash system (Figure 4) to recover water through evaporation and condensation. The remaining wastewater can be treated by a properly designed and operated land application farm.

3. Treat combined wastewater with coagulation, dissolved air floatation and filtration to remove suspended solids and associated BOD_5, then treat the effluent by a properly designed and operated landfarm.

In all cases, the sludge generated will be dewatered and dried using sludge drying beds constructed on the landfarm area available to the YIC. The dried sludge will be landfilled or sold if such a demand exists.

Based on the economics, the least costly option can be selected. We feel that a properly evaluated, designed, constructed, operated and monitored land treatment system will provide a long term solution to waste management not only for the YIC but for other industries in Jordan. This issue could be considered as PP/WM issue on a regional or national basis.

5.1.7 Domestic Wastewater Treatment

We recommend, if possible, that YIC discharge the domestic wastewater to the city sewer system. If this is not cost effective, then a concrete septic tank and an engineered leach field should be installed for proper waste management. Furthermore, proper periodic maintenance will ensure good septic tank performance.

5.2 Pollution Prevention /Waste Minimization - Solid Waste

All solid waste generated at the facility are disposed offsite.

Some of the recommendations made in previous sections such as good housekeeping, planned preventive maintenance, spill prevention and control program should assist the YIC in minimizing solid waste generation.

The YIC is also implementing a program, as previously discussed, to reduced yeast spills.

5.3 Pollution Prevention/Waste Minimization - Air

At YIC, the main emission sources are fermentors, the dryer, and the wastewater treatment plant including the land application farm. Currently, no air monitoring is performed and no emissions data exist.

To control fermentor emissions, the process control measures such as incremental-feed system implementation can control ethanol formation during fermentation. By matching the addition of substrate to the yeast's growth curve, a low excess-sugar concentration can be maintained by sufficiently aerating the fermentor and in turn maximizing the yeast's respiratory activity. The result is a greatly increased final yield and a decreased VOC emission rate. Since the majority of yeast growth occurs in the main fermentation stages, it is most beneficial to equip the main fermentors with incremental feed systems.

We do not recommend any other technologies to treat fermentors exhaust at this time. We do recommend, however, that YIC initiate monitoring of the fermentor exhaust on a monthly basis for total hydrocarbons. Depending upon the results, plans can be developed for further actions.

We also concur with the following recommendation made in the WEC report dated June 1992. It is reproduced as originally printed.

> *"The plant should investigate and purchase a flame ionization detector for the purpose of analyzing the stack emissions of the fermentation vessels for total hydrocarbons. The emissions of total hydrocarbons during the fermentation process are directly related to the fermentation process and would allow plant personnel to monitor and optimize this process. By plotting these emissions over time, and by finding optimum emissions at certain points in the fermentation, the plant could better control their fermentations so that the possibility of over feeding, and thus the over reduction of organic waste can be controlled. Further, this will improve the quality of the yeast produced by YIC, since this instrument would allow them to keep control from batch to batch and thus have a more uniform product. With a more uniform product, comes a more uniform wastewater".*

The dryer exhaust air is passed through a cyclone to recover yeast dust. However, the efficiency of this system is not monitored.

With respect to the land application farm and wastewater treatment plant, we believe that a properly designed, constructed and operated land application farm will reduce emissions and odors that the audit team experienced during our visit.

6.0 Water Conservation Potential

As previously discussed, 94 percent of the water use at YIC is for process and equipment cleaning while 6 percent is used for other purposes. The process water and tank cleaning water requirements are critical to maintain product quality. We have, therefore, identified certain water conservation opportunities, which will need to be evaluated against their potential impact on product quality as well as their capital cost. The suggested water conservation opportunities are noted below.

6.1 Process Optimization and Modifications

We believe that by improving process control and instrumentation, and carefully monitoring the actual process water requirements versus actual water usage, water consumption can be reduced by optimization. Water conservation opportunities through process optimization are considered to exist for:

- Stage I and Stage II yeast washwater;
- Use of filtrate as part of Stage I washwater;
- Use of Stage II centerate as part of Stage I washwater; and
- Molasses preparation process.

Process optimization can generally be achieved through the following:

- Monitoring of process variables including flow rates, water to molasses ratio, temperature, feed and product quality, etc.;

- Developing optimum operating conditions based on the data; and

- Controlling process water use by installing flow-control valves, and timers.

The YIC may be able to reduce process water consumption without affecting the product quality through optimization. Other opportunities specific to molasses preparation water and product recovery water are discussed below.

Molasses Preparation Water. Fresh water is used to dilute the molasses in the molasses preparation process. The fresh water could potentially be replaced with recycled molasses tank (and other molasses equipment) rinse water.

Product Recovery Water. Fresh water is currently used to rinse the centrifuged yeast in the product recovery process. The fresh water could potentially be replaced with recycled centrifuge effluent, filtrates from both filters, or fermentor cleaning water. If the solids loading in these process waters is too high to be used effectively, the wastewater could be pretreated by being clarified, filtered, and mixed with fresh make-up water.

In addition, new processes can be investigated such as recycling the product recovery rinse water. In a process reported in a French publication (ref.: Overcash), the spent rinse water and the centrifuge effluent are evaporated and then condensed and recycled to other facility processes. The solids are processed as products including potassium sulfate and concentrated protein. In addition, the process has been claimed to reduce the BOD and COD levels in the wastewater from the product recovery process by approximately twenty times. A flow diagram of the process is provided as Figure 4.

The applicability of these improvements may be subject to cleanliness requirements. However, since surge tanks and/or gravity separators would be required to store the recycled water, sterilization could be performed as necessary.

In addition to the above, a properly instituted maintenance program encompassing preventative maintenance can conserve energy and water. We have assumed about 10 percent probable water savings through process optimization. Extensive process modifications may not be cost effective at this time.

6.2 Tank Cleaning Frequency Reduction

The tanks cleaning frequency can be reduced. Instead of cleaning each tank after each batch, some of the tanks such as yeast cream storage tanks, and molasses storage tank can be cleaned after every other batch without adversely affecting yeast quality. In addition, the last rinse water can be stored and used as a first rinse for the subsequent cleaning operation of the same tanks.

With the combination of these two measures, the anticipated water savings for tank cleaning water could be as much as 50 to 60 percent. It is certainly recognized that storage of rinse water and recycling will require installation of piping, pumps, electrical controls and instrumentations.

6.3 Steam Recycle

A state-of-the-art fermentation facility operated by the Pfizer Corporation in Connecticut (U.S.) captures spent sterilization steam. Instead of being discharged to the atmosphere, the spent steam is condensed and disinfected in a catch compartment before any effluent leaves the plant. This condensate could potentially be recycled into another process at the facility.

This option may not currently be cost effective but should be evaluated and explored in the future.

6.4 Floor Washing

Floor washing procedures unless properly established, monitored and managed can result in wasting hundreds and thousands of cubic meters of water every year due to complete lack of controls, non-awareness of water as a commodity and no incentives to save water. The

following water conservation measures, if taken, could assist YIC in reducing floor washwater:

- Sweep up dried materials instead of washing them into the drain;
- Eliminate the causes of spillage, such as leaking pipes and accidental loading, transfer, and storage area spills;
- Use dry vacuum techniques to clean up material spills instead of washing them down the drain;
- Use timer controlled valves for controlling washwater. This will help reduce the amount of water used for each washing;
- Utilize water saving equipment as much as possible. Different types of water saving equipment include.

  Flow Regulation Devices. When these devices are inserted into a water line, they restrict flow to a constant rate.

  Flow Shut-off Devices. The most useful devices are finger operated shut-off valves, or guns, with nozzles on the ends of cleanup hoses. When finger pressure is released, water flow is stopped.

  Nozzles. Nozzles use less water than drilled pipe sprays. For faster, more efficient cleaning, a "Vee" type nozzle is preferred.

  Overflow Preventors. These devices are employed to prevent overflowing of containers, tanks, or reservoirs, thus minimizing spills.

- Perform floor washing only on an as-needed basis; and
- Improve housekeeping by developing and implementing strict operating protocols.

We believe by establishing procedures and schedules for floor washing and using a dry vacuum system, floor washwater can be reduced by 30 to 40 percent.

6.5 Replacing Evaporative Cooling with Air Cooling System

YIC should explore the use of an air cooling system using an indirect contact heat exchanger and air as a cooling medium. This will eliminate 100 percent of the evaporative cooling water loss which is currently estimated to be about 50 m^3 per day.

6.6 Miscellaneous Reductions

The filter washing sequence and regeneration process should be carefully reviewed, studied and optimized. Careful studies may show that desired results can be achieved by:

- Reducing the duration of the cleaning cycles; or
- Reducing the amount of water required per cycle; or

- A combination of both.

Operating procedures can be developed to ensure that washing and regeneration are conducted when necessary based upon operating parameters. Such optimization and use of new resins and technologies could reduce water consumption by 20 to 30 percent.

6.7 Wastewater Treatment Plant Cleaning

It is estimated about 50 m^3 of water is used daily to flush wastewater conveyance piping and associated accessories. To reduce this water requirement we recommend to segregate industrial wastewater into the following categories:

- Concentrated wastes from Separators #1 and #2; and
- Dilute wastes from other sources.

The estimated amount of concentrated wastes and dilute wastes are 260 m^3 and 235 m^3, respectively. The YIC can use existing storage tanks to contain both wastes. While pumping the wastewater to the land application farm, concentrated and dilute waste can be combined at a volumetric ratio of 1 to 0.7. Thereby, when the entire concentrated waste is pumped, 50 m^3 of dilute wastewater will remain which can be used to flush the concentrated waste holding tank, piping and other accessories.

6.8 Domestic Water Use

The YIC employs about 70 people with a reported domestic water consumption is about 10 m^3 per day. For a manufacturing facility, an acceptable figure is 0.06 m^3 per day per capita. The total anticipated domestic water consumption for the YIC facility is about 6 m^3 per day. Therefore, it appears that there is opportunity for improvement to reduce domestic water consumption. Domestic water reduction can be achieved by the following measures:

- Meter water consumption on a daily basis by installing a flow meter on the main supply line;
- Provide water conservation training to YIC staff;
- Install automatic water shutoff valves on sinks and hoses;
- Install aerated shower heads, that control water flow but provide the same sensation and cleaning efficiency of high water flow shower heads;
- Modify toilets to control the flush water volume by providing a partition and adjusting the float height;
- Implement drip or trickle irrigation techniques to irrigate gardens; and
- Routinely check all plumbing, faucets and other outlets and repair leaky pipes, valves and faucets.

By implementation of the above PP/WM methods, it is expected that domestic water consumption and wastewater generation can be reduced by 20 to 40 percent.

6.9 Conceptual Water Balance

The PP/WM and water conservation solutions integrated into a single program will offer the great water savings. Using the current estimates for YIC water usage, a proposed conceptual water management plan was developed (Figure 3). This scenario includes the following PP/WM and water conservation measures:

- Modify the molasses preparation and fermentation processes through instrumentation, controls and automation; and
- Implement an incremental-feed fermentation process;
- Modify and optimize the tank cleaning schedule;
- Install a counter-current yeast washing process including filtrate recycling;
- Modify the wastewater treatment plant cleaning procedures;
- Use water saving equipment and good housekeeping practices to minimize floor cleaning, and leakage losses;
- Replace the wet evaporative cooling system with an air cooling system;

A summary of the projected water usage and savings for individual water sources for this scenario is presented in Table 13. As can be seen from the table, implementing the above PP/WM and water conservation measures can potentially reduce fresh water requirement to 438 m^3/day from 636 m^3/day, and result in a 30 percent savings.

This conceptual water balance illustrates a scenario which we believe is feasible. However, it should be noted that this water balance is not the only possibility. Other PP/WM and water conservation opportunities such as vented steam capture and recycle, and separator effluent evaporation and recycle may exist which may require new process applications or modifications and which may be relatively more difficult to implement. However, PP/WM and water conservation opportunities not evaluated at his time should not be eliminated from consideration, as their feasibility can only be determined through more intensive study and evaluation.

In the future, if YIC implements a vented steam capture and recycle system and a separator effluent evaporation and water recovery system, the effluent flow and pollution reduction could be as much as 60 percent. As previously stated, however, this may not be economical in the foreseeable future.

7.0 Conclusion and Recommendations

Water plays a critical role in the yeast manufacturing process. The primary use of water is for preparation of molasses substrate and washing residual molasses liquor from yeast after its formulation. About 66 percent of the total water consumed is for yeast processing.

7.1 Conclusions

Based on the audit findings, the following conclusions are made:

1. The main wastewater sources are:

   - Centrifuge Separator Discharges (390 m^3/day);
   - Tank Washwater (54 m^3/day);
   - WWTP Washwater (50 m^3/day);
   - Floor and Lab Wastewater (21 m^3/day);
   - Filter Washwater (10 m^3/day); and
   - Filtrates (10 m^3/day).

2. The residual molasses liquor discharged from Separator #1 is the most concentrated wastewater generated at the facility.

3. Wastewater effluent from Separator #2 is moderately high with respect to organic loading, next to the Separator #1 effluent.

4. Other combined discharges could be considered to be dilute wastewater.

5. The organic load generated at the facility could be minimized through:

   - Process optimization and automation;
   - Process automation with incremental feed additions rather than manual batch operation;
   - Fermentation process control through exhaust monitoring and feed back control;
   - Minimizing tank cleaning frequency;
   - Countercurrent washing of yeast and reuse of filtrate;
   - Good housekeeping;
   - Sweeping or dry vacuuming floors; and
   - Implementation of new technologies or installation of new resins for water demineralization.

6. Water savings should result from the PP/WM measures described herein. In addition, water conservation can be achieved through implementation of:

- Installation of an air cooling system;
- Use of dilute wastewaters to clean wastewater conveyance piping instead of fresh water;
- Tank cleaning frequency minimization and use of last rinse water for the first rinse of the next cleaning cycle; and
- Filtrate recycling.

7. The facility does not have a program for monitoring water use, wastewater discharges and air emissions.

8. Implementation of the PP/WM and water conservation measures could reduce pollution load by 15 to 20 percent and hydraulic load by 30 percent.

9. Other PP/WM and water conservation opportunities such as vented steam capture and recycle, and separator effluent evaporation and recycle may exist which may require new process applications or modifications and which may be relatively more difficult to implement. However, PP/WM and water conservation opportunities not evaluated at his time should not be eliminated from consideration, as their feasibility can only be determined through more intensive study and evaluation.

   In the future, if YIC implements a vented steam capture and recycle system and a separator effluent evaporation and water recovery system, the effluent flow and pollution reduction could be as much as 60 percent. As previously stated, however, this may not be economical in the foreseeable future.

7.2 Recommendations

1. Install devices to monitor discharges from all processes and cleaning operations including equipment and floor cleaning. Generate and maintain an accurate measurement and balance of facility water use. Water and wastewater flows should be monitored daily.

2. Design and implement a wastewater sampling and monitoring program to cover all wastewater sources identified in this report. All wastewaters be monitored for pH, BOD_5, COD, TSS, TDS, NH_4-N, T-N and T-P.

   For the first two years, a monthly sampling frequency should provide the YIC management a fair idea of the pollutant loads in different wastewater streams. The final effluent, however, should be monitored weekly, except for flow and pH, which should be recorded daily. The sampling frequency can be adjusted to quarterly sampling upon process optimization.

   Also, initiate fermentor exhaust sampling and monitoring program to monitor VOC emissions.

3. Optimize, modify and upgrade the molasses preparation and fermentation systems through automation and process monitoring, and incremental-feed system implementation.

4. Optimize tank cleaning systems by minimizing the washing frequency and using the last rinse water for the initial rinse of the next cleaning sequence.

5. Recycle and reuse filtrate and implement counter-current yeast washing system.

6. Establish and implement rigorous equipment cleaning and floor cleaning procedures to conserve water.

7. Optimize cleaning methods by carefully studying current procedures, washing time, solution concentration, water temperature, intensity of application etc. By applying an appropriate combination of these elements to each type of tanks can reduce water use. Establish protocols and procedures.

8. Optimize the regeneration process and explore the use of new technologies and resins.

9. Improve housekeeping and implement a spill prevention and control and countermeasures program. Use dry vacuum techniques instead of washing spills into the drain.

10. Segregate Separator #1 effluent and other dilute wastes. Use existing wastewater tanks to store them separately. Use a portion of the dilute wastewater to clean and flush the wastewater equipment and conveyance piping system rather than using fresh water.

11. Explore installing an air cooling system to replace the existing wet evaporative cooling system.

12. We concur with the following recommendations made in the WEC report:

    "The outdoor above-ground diesel storage tank and acid tanks should have a containment dike built around it such that this dike could contain the volume of the tank in case of tank failure or rupture. It is also a safe operating practice.

    The underground storage tank of diesel fuel should have a management program whereby on a weekly basis the plant logs usage, receipt of fuel, and tank inventory by level. By keeping this type of log, the plant should be able to balance fuel use from the tank and detect a leak, if it occurs, at an early stage."

13. The YIC should develop an environmental management program to include:

    - Establishing an Environmental Department with dedicated personnel and sufficient resources;

- Writing an environmental policy complete with missions, visions, goals, policies and a future work plan. The PP/WM and water conservation goals need to be established to achieve the PP/WM program, in line with the Ministry goals; and

- Developing training and incentive programs for all YIC personnel.

14. Consider the following PP/WM and water conservation items for feasibility levels studies:

    - Process modifications and upgrading through automation;
    - Optimization of tank cleaning system; and
    - Implementation of air cooling system.

    Although the above items will, if implemented, reduce the organic pollution and wastewater volume by 15 to 20 percent, we strongly feel that YIC should undertake thorough feasibility level efforts to determine a cost effective treatment for processing the final wastewater. Some of the options we recommend for the YIC's consideration are as follows:

    - Total wastewater attenuation, filtration and land application.
    - Total wastewater coagulation, dissolved air flotation, filtration and land application.
    - Total wastewater coagulation, clarification, anaerobic biodegradation treatment followed by off-site land application.
    - Segregation of concentrated and dilute waste; treatment of concentrated waste by coagulation, and dissolved air flotation; mixing with dilute wastewater; filtration and land application of combined wastes.
    - Segregation of concentrated waste and treatment by coagulation, clarification, anaerobic biodegradation; mixing treated waste with dilute waste; filtration and land application of combined wastes.

    In all above options, the following will apply:

    - Land treatment should be thoroughly pilot studied, designed, constructed, operated and monitored throughout the life cycle.

    - Sludges produced should be dried using sludge drying beds and dried sludge either marketed or disposed.

    - Existing wastewater treatment equipment should be used to the fullest extent.

    - An on-site anaerobic biotreatment, if operated, will generate relatively minimum sludge. It will produce methane gas which can be flared or used as a fuel for the boiler, if feasible.

7.3 Success Stories

Pfizer Corporation, Connecticut (U.S.) is currently capturing spent sterilization steam from fermentors for reuse as process water (see Section 6.3). This system is minimizing the pollution discharge as well as conserving water by reuse.

Technology has been developed to reduce pollution and conserve water in the yeast washing process. This technology is referred to as "Overcash". In the Overcash system, spent washwater and the centrifuge effluent are evaporated and then condensed. The condensate is recycled to other processes and the solids can be processes as products, such as potassium sulfate and concentrated protein. In addition to, conserving water, the process has been claimed to reduce BOD and COD levels in the wastewater by approximately twenty times. A flow diagram for this process is provided as Figure 4.

8.0 Follow-up Actions

This section contains our recommendations to the YIC concerning follow-up actions required to meet the PP/WM and water conservation objectives. Although the PP/WM is generally given priority over water conservation in most countries, due to the limited water resources in Jordan, PP/WM and water conservation measures should be given equal importance. With this philosophy, the following actions are recommended in order of their priority.

1. Develop and implement a plan to monitor major process water and/or wastewater discharges by installing flow measuring devices and establishing sample collection procedures and protocols. Discharge rates should be recorded daily.

2. Install flow monitoring devices at all key locations to monitor fresh water usage.

3. Study, evaluate and implement options recommended for the PP/WM and water conservation. Set priority to items recommended for feasibility level studies.

4. Utilize water conservation equipment as much as possible, such as flow regulating devices, automatic shut-off valves, nozzles and overflow preventors.

5. Initiate fermentor exhaust monitoring which will indirectly assist the YIC in process control and optimizing yeast yield thereby reducing waste organic loads.

6. Develop protocols and procedures for equipment and floor washing and strictly adhere to them.

7. Develop a PP/WM and water conservation policy statement as part of the YIC management operating philosophy and distribute it to all personnel.

8. Designate a PP/WM and water conservation coordinator to implement the program.

9. Implement a PP/WM and water conservation through established goals and objectives.

10. Train employees to identify the PP/WM and water conservation opportunities that relate to their job.

11. Publicize success stories and reward employees that identify cost effective PP/WM opportunities.

12. Illustrate management efficiency by implementation of the above actions. Reinforce the PP/WM policy through continued education at work and company functions.

13. Perform a periodic assessment of the PP/WM and water conservation program by key management personnel, the coordinator and independent experts.

Table 1
SUMMARY OF ANNUAL RAW MATERIAL CONSUMPTION

Yeast Industries Company

Material	Annual Consumption (t/year)	Storage Capacity (t)
Beet Molasses	8,000	-
Sulfuric Acid (Concentrated)	60	25
Nitric Acid	0.5	-
Sodium Hydroxide (flakes)	240	6
Urea	120	100
Calcium Hypochloride	0.1	0.5
Mono Ammonium Phosphate	72	40
Magnesium Sulfate	24	20
Potassium Chloride	12	2
Formaldehyde	14	20
Antifoam	-	-
Diesel Fuel	720,000[1]	50,000[1]
Sodium Chloride	-	-
Vitamins	-	-

1 Units are in liters.
(-) Data not available.

Table 2
OVERALL WATER BALANCE ACROSS FACILITY[1]

Yeast Industries Company

Water Inflow (m^3/day)		Water Outflow (m^3/day)	
Well Water Pumped	626	Separator Discharge	390
Molasses Moisture	10	Cooling System	56
		Tank Washing	54
		WWTP Cleaning	50
		Floor/Lab Washing	21
		Boiler Make-Up Water	20
		Filter Cleaning	10
		Filter Press and RVF	10
		Dryer Exhaust	10
		Product Moisture	10
		Regeneration	3
		Chiller Make-up	1
		Valve Operator	1
TOTAL	636		636

1 Domestic water is supplied by the Water Authority of Jordan and domestic wastewater is discharged to an onsite septic tank. Daily domestic water consumption is 10 m^3.

Table 3
SUMMARY OF WASTEWATER SOURCES[1]

Yeast Industries Company

Source	Volume (m^3/day)
Process Wastewater	
Separator Discharge	390
Filter Press and RVF Filtrates	10
Equipment Cleaning Wastewater	
Tank Washwater	54
WWTP Cleaning	50
Filter Cleaning	10
Floor Washwater (including lab)	21
Cooling System Wastewater	6
Regenerant Wastewater	3
Valve Opener Wastewater	1
TOTAL	545

1 Domestic wastewater is generated at a rate of approximately 10 m^3/day.

Table 4
COMPARISON OF YEAST SEPARATOR EFFLUENT DATA[1]

Yeast Industries Company

Parameter	Concentrations (mg/l)[2]		
	Separator #1	Separator #2	Separator #3
pH (su)	6.1	6.6	6.8
Total Dissolved Solids	51,024	6,371	1,175
Total Suspended Solids	2,116	170	151
Total Volatile Solids	30,633	3,672	663
Total Volatile Suspended Solids	2,194	138	128
Biochemical Oxygen Demand	27,334	4,293	960
Chemical Oxygen Demand	58,277	6,626	1,370
Iron	18.5	2.2	0.3
Ammonia Nitrogen	230	30	4
Total Nitrogen	3,035	252	39
Total Phosphate	9.8	6.2	3.6

1 From WEC Report dated June 3, 1992.
2 Except as noted

Table 5
FILTER PRESS EFFLUENT CHARACTERISTICS[1]

Yeast Industries Company

Parameter	Sample Date		
	28-08-91	04-09-91	Average
pH (su)	4.8	4.6	4.7
Total Dissolved Solids (mg/l)	7,540	4,706	6,105
Biochemical Oxygen Demand (mg/l)	7,321	3,832	5,577
Chemical Oxygen Demand (mg/l)	24,621	24,662	24,642

1 From WEC Report dated June 3, 1992.

Table 6
ROTARY VACUUM FILTER EFFLUENT CHARACTERISTICS[1]

Yeast Industries Company

Parameter	Sample Date		
	28-08-91	04-09-91	Average
pH (su)	5.8	6.8	6.3
Total Dissolved Solids (mg/l)	1,140	1,150	1,145
Biochemical Oxygen Demand (mg/l)	4,847	2,726	3,787
Chemical Oxygen Demand (mg/l)	24,621	24,662	24,642

1 From WEC Report dated June 3, 1992.

Table 7
1991 WASTEWATER EFFLUENT QUALITY DATA[1]

Yeast Industries Company

Parameter	Concentrations (mg/l)[2]		
	Minimum	Maximum	Average
pH (su)	5.7	6.7	6.26
Total Dissolved Solids	8,942	19,218	14,356
Total Suspended Solids	612	848	752
Total Volatile Solids	5,904	10,144	7,580
Total Volatile Suspended Solids	550	726	617
Biochemical Oxygen Demand	4,613	13,022	8,650
Chemical Oxygen Demand	12,842	22,219	16,807
Iron	6.8	10.5	8.3
Ammonia Nitrogen	53	487	224
Total Nitrogen	557	1,240	871
Total Phosphate	10.6	60.9	29.0

1 Royal Scientific Society/Amman Environmental Research Centre. Characteristic of Wastewater at Yeast Industries, 1991.

2 Except as noted.

Table 8
SUMMARY OF WASTEWATER EFFLUENT CHARACTERISTICS (1990-1993)[1]

Yeast Industries Company

Date of Sample	Effluent Concentrations (mg/l)					
	Total Dissolved Solids	Total Suspended Solids	Biochemical Oxygen Demand	Chemical Oxygen Demand	Ammonia Nitrogen	pH
23-10-90	14,686	440	6,600	11,465	448	6.45
10-11-90	6,980	8,020	4,239	17,162	716	6.15
05-12-90	12,286	1,140	4,368	8,432	280	6.6
05-02-90	11,734	1,952	6,204	13,533	148.7	5.4
12-03-91	8,340	2,946	3,840	13,000	186.5	5.6
07-05-91	12,164	4,402	6,775	15,141	64	6.8
29-05-91	12,490	3,644	10,959	22,825	145	6.3
27-08-91	11,000	3,820	9,367	15,185	365	6.6
19-09-91	11,885	4,995	6,182	11,734	128	6.5
02-10-91	6,960	4,844	3,559	8,813	77	6.6
05-11-91	8,790	528	528	10,605	-	6.0
23-12-91	10,347	900	900	11,682	-	6.5
26-05-92	2,462	1,138	1,138	6,376	-	5.8
05-08-92	11,600	1,653	1,653	23,016	-	5.4
12-08-92	8,228	560	560	12,350	-	5.9
12-10-92	9,110	1,277	1,277	16,002	-	6.5
04-11-92	9,234	937	937	16,352	-	6.7
16-12-92	8,309	1,543	1,543	11,838	-	6.3
05-01-93	11,285	1,120	13,248	13,248	-	6.15
15-02-93	8,673	1,110	7,672	7,672	17	6.90
05-04-93	7,526	1,257	5,096	5,096	131	6.40
15-05-93	5,967	933	5,906	5,906	61	6.30

Date of Sample	Effluent Concentrations (mg/l)					
	Total Dissolved Solids	Total Suspended Solids	Biochemical Oxygen Demand	Chemical Oxygen Demand	Ammonia Nitrogen	pH
23-06-93	7,265	1,160	5,997	5,997	-	6.40
20-07-93	6,720	1,170	4,620	4,620	58	6.50
16-08-93	6,710	875	4,431	4,431	-	6.8
11-09-93	8,844	876	4,761	4,761	320	6.5
13-10-93	8,840	1,025	6,860	6,860	-	6.7
29-11-93	5,318	486	3,189	3,189	99	6.9
27-12-93	8,057	770	6,210	6,210	-	6.4

1 = Data obtained from WAJ.
(-) = Data not available.

Table 9
SUMMARY OF MISCELLANEOUS WATER LOSSES

Yeast Industries Company

Item	Volume (m^3/day)
Cooling Tower Evaporation	50
Sterilization Steam Losses	20
Product Moisture	10
Dryer Exhaust	10
Other	1
TOTAL	91

Table 10
SUMMARY OF SOLID WASTES GENERATED

Yeast Industries Company

Waste Material	Quantity Generated
Spilled Yeast	150 kg/day
Packaging Materials	
Wax Paper	20 kg/day
Aluminum Foil	10 kg/day
Cardboard	10 boxes/day
Empty Plastic Bags (PP,PE)	500 bags/month
Broomed Salts	50 kg/year
Automobile Tires	-

(-) Data not available.

Table 11
TREATABILITY TEST RESULTS[1]

Yeast Industries Company

Location	Parameter Concentration (mg/l)		
	Chemical Oxygen Demand	Total Suspended Solids	pH
First Separator Effluent	22,800	2,938	7.15
$FeCl_3$ (20%)	22,600	2,744	6.65
% Reduction	0	7	-
Lime (20%)	23,200	3,926	8.1
% Reduction	0	0	-
Alum (20%)	23,200	1,776	7.5
% Reduction	0	40	-
Second Separator Effluent	16,800	953	7.1
$FeCl_3$ (20%)	8,000	306	6.6
% Reduction	52	68	-
Lime (20%)	4,800	401	9.15
% Reduction	71	58	-
Alum (20%)	5,600	345	7.65
% Reduction	67	64	-
Third Separator Effluent	1,600	933	7.15
$FeCl_3$ (20%)	1,200	385	7.8
% Reduction	25	59	-
Lime (20%)	1,200	393	8.95
% Reduction	25	58	-
Alum (20%)	1,200	368	8.0
% Reduction	25	60	-
Hydrogen Peroxide (20%)	480	280	10.5
% Reduction	70	70	-
Alum + Lime (20%)	400	305	9.3
	75	67	-
Final Effluent	21,200	1,878	6.45
$FeCl_3$ (20%)	23,200	1,302	6.85
% Reduction	0	31	-
Lime (20%)	22,200	897	6.85
% Reduction	0	52	-
Alum (20%)	23,200	819	6.5
% Reduction	0	56	-

1 Tests were conducted on March 18, 1995 at YIC Laboratories.

Table 12
MARCH 1995 WASTEWATER SAMPLING RESULTS

Yeast Industries Company

Location	Parameter Concentration (mg/l)					
	Biochemical Oxygen Demand	Chemical Oxygen Demand	Total Suspended Solids	Ammonia Nitrogen	Total Kjeldahl Nitrogen	pH
Separator #1 Effluent	14,443	22,800	2,938	456	2,405	7.15
Separator #2 Effluent	12,220	16,800	953	60	400	7.1
Separator #3 Effluent	1,079	1,600	933	42	891	7.15
Final Effluent	13,529	21,200	1,878	237	-	6.45

1 Samples were collected on March 18, 1995 and analyzed at YIC Laboratories.
(-) Data not available

Table 13
PROPOSED WATER REDUCTION, RECYCLE AND REUSE[1]

Yeast Industries Company

Source	Water Usage (m^3/day)		
	Current	Projected	Savings
Yeast Washing (including filtrate return)	390	330	60
Cooling System	56	6	50
Tank Washing	54	27	27
WWTP Cleaning	50	0	50
Floor/Lab Washing	21	13	8
Boiler Make-up Water	20	20	0
Filter Cleaning	10	8	2
Filter Press and RVF	10	10	0
Dryer Exhaust	10	10	0
Product Moisture	10	10	10
Regeneration	3	2	1
Chiller Make-up	1	1	0
Valve Operator	1	1	0
TOTAL	636	438	198

1 Domestic water is currently consumed at YIC at a rate of approximately 10 m^3/day. It is expected that consumption can be reduced by 20 to 40 percent.

2 If in the future, an Overcash Water Recovery System is implemented to recover Separator #1 effluent, an additional 120 m^3/day water can be saved thereby reducing the pollution load and water usage by 50 to 60 percent.

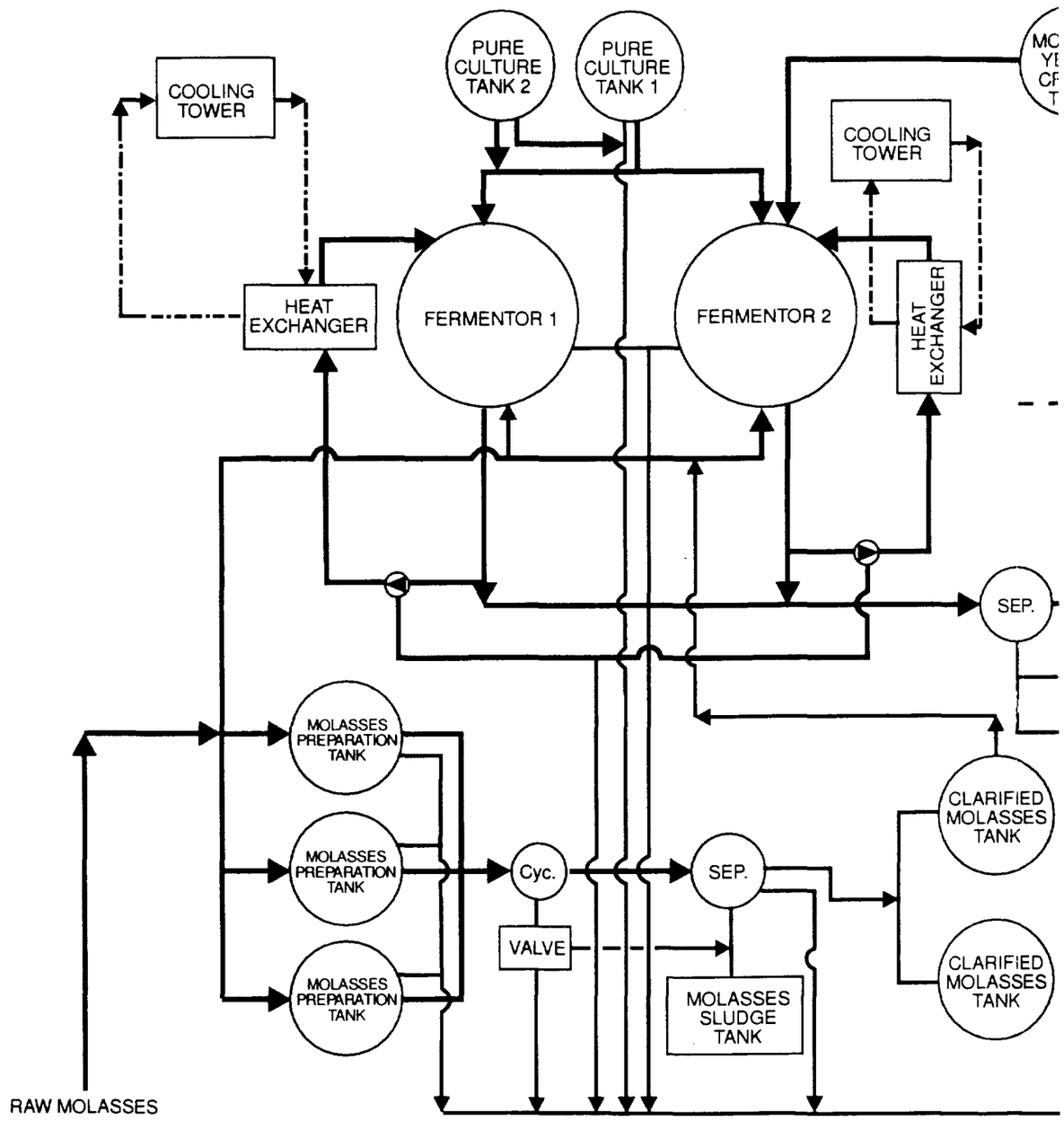

HARZA *Consulting Engineers and Scientists*

\proposal\jordan\process2.cdr

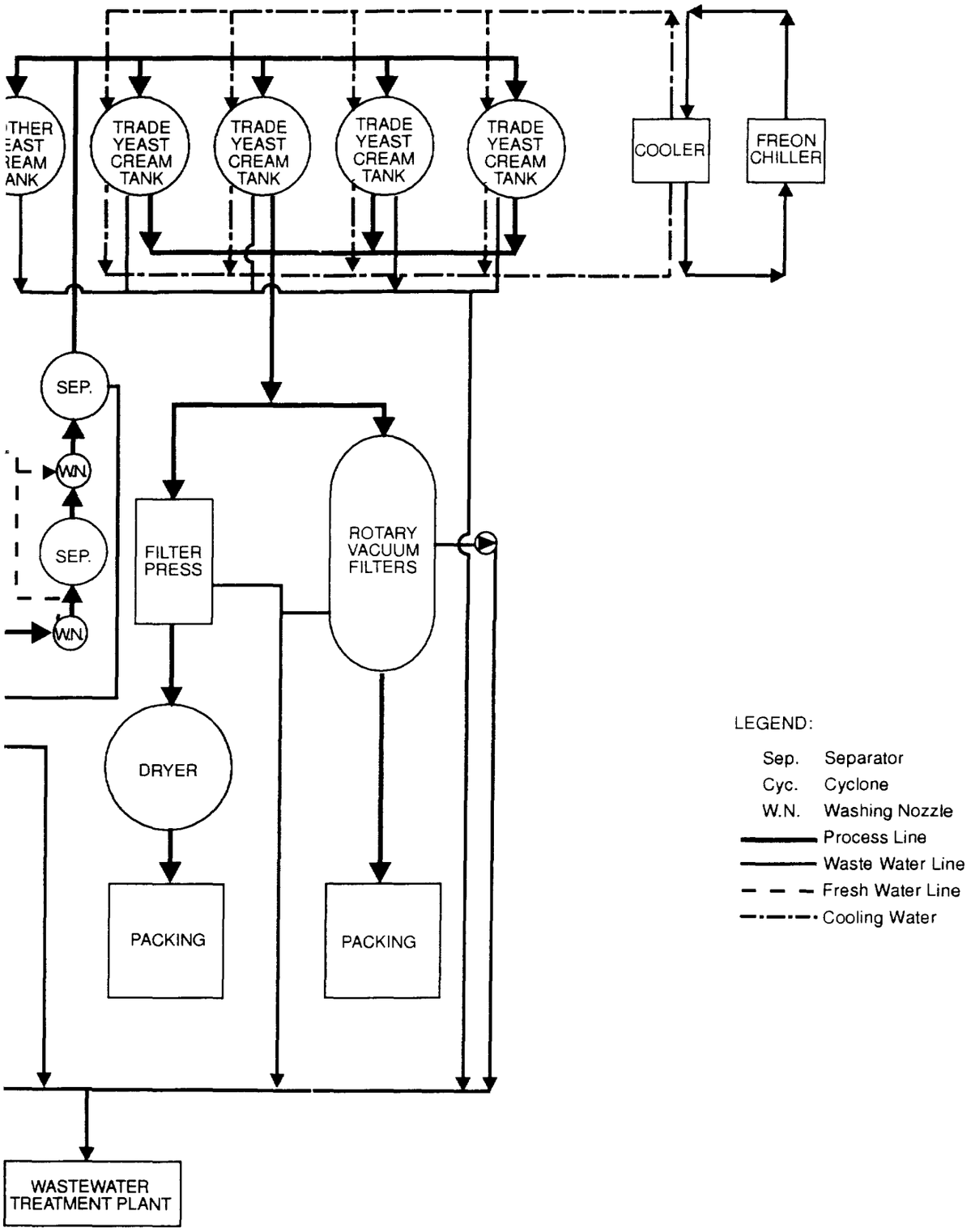

Figure 1

Yeast Manufacturing Process
BLOCK FLOW DIAGRAM
YEAST INDUSTRIES CO., LTD.
Ruseifa, Jordan

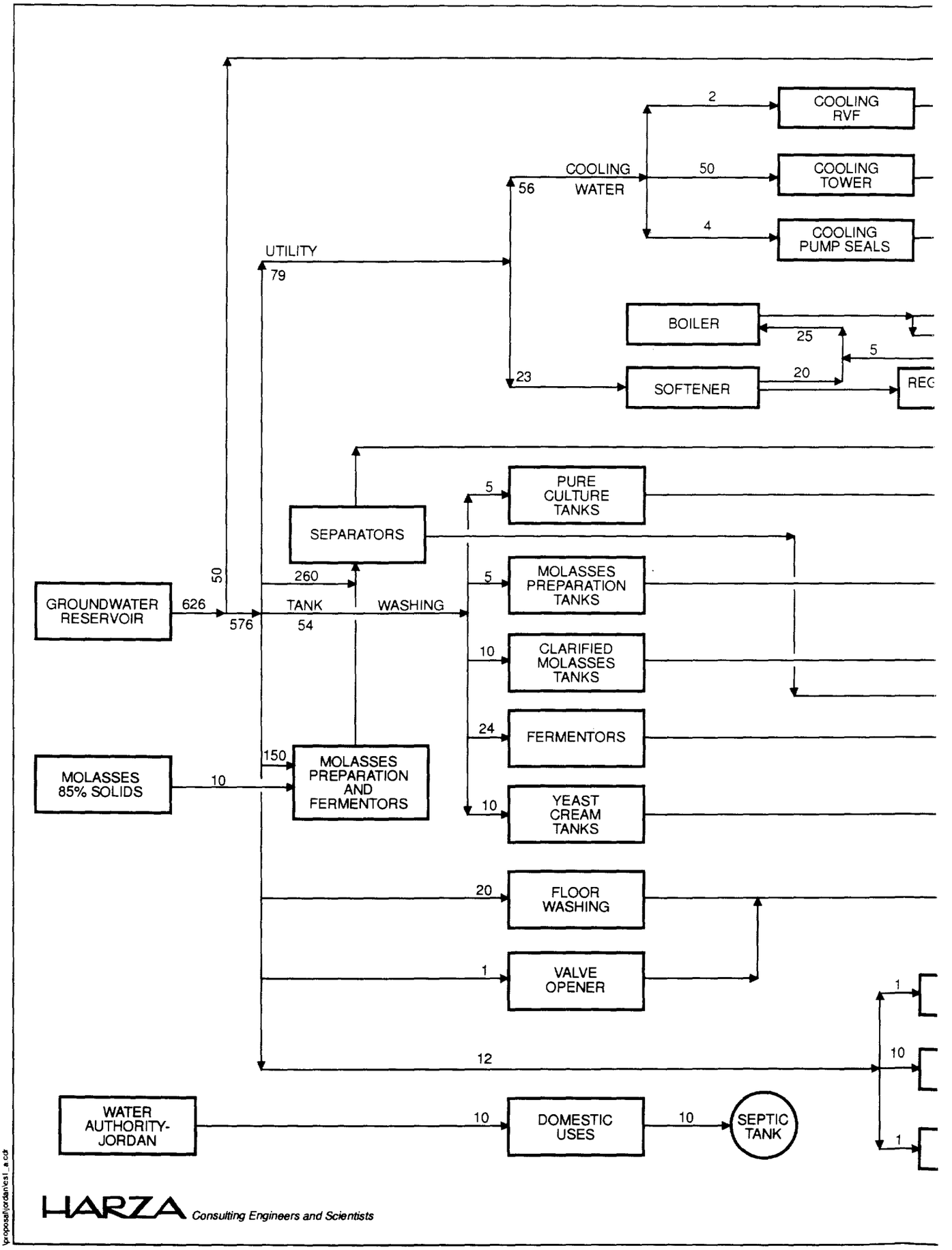
COOLING RVF
COOLING TOWER
COOLING PUMP SEALS
COOLING WATER
2
50
4
56
UTILITY
79
BOILER
25
5
20
23
SOFTENER
REC
PURE CULTURE TANKS
SEPARATORS
MOLASSES PREPARATION TANKS
CLARIFIED MOLASSES TANKS
FERMENTORS
YEAST CREAM TANKS
GROUNDWATER RESERVOIR
626
576
50
260
TANK
WASHING
54
MOLASSES 85% SOLIDS
10
150
MOLASSES PREPARATION AND FERMENTORS
FLOOR WASHING
VALVE OPENER
12
WATER AUTHORITY-JORDAN
DOMESTIC USES
SEPTIC TANK
HARZA Consulting Engineers and Scientists

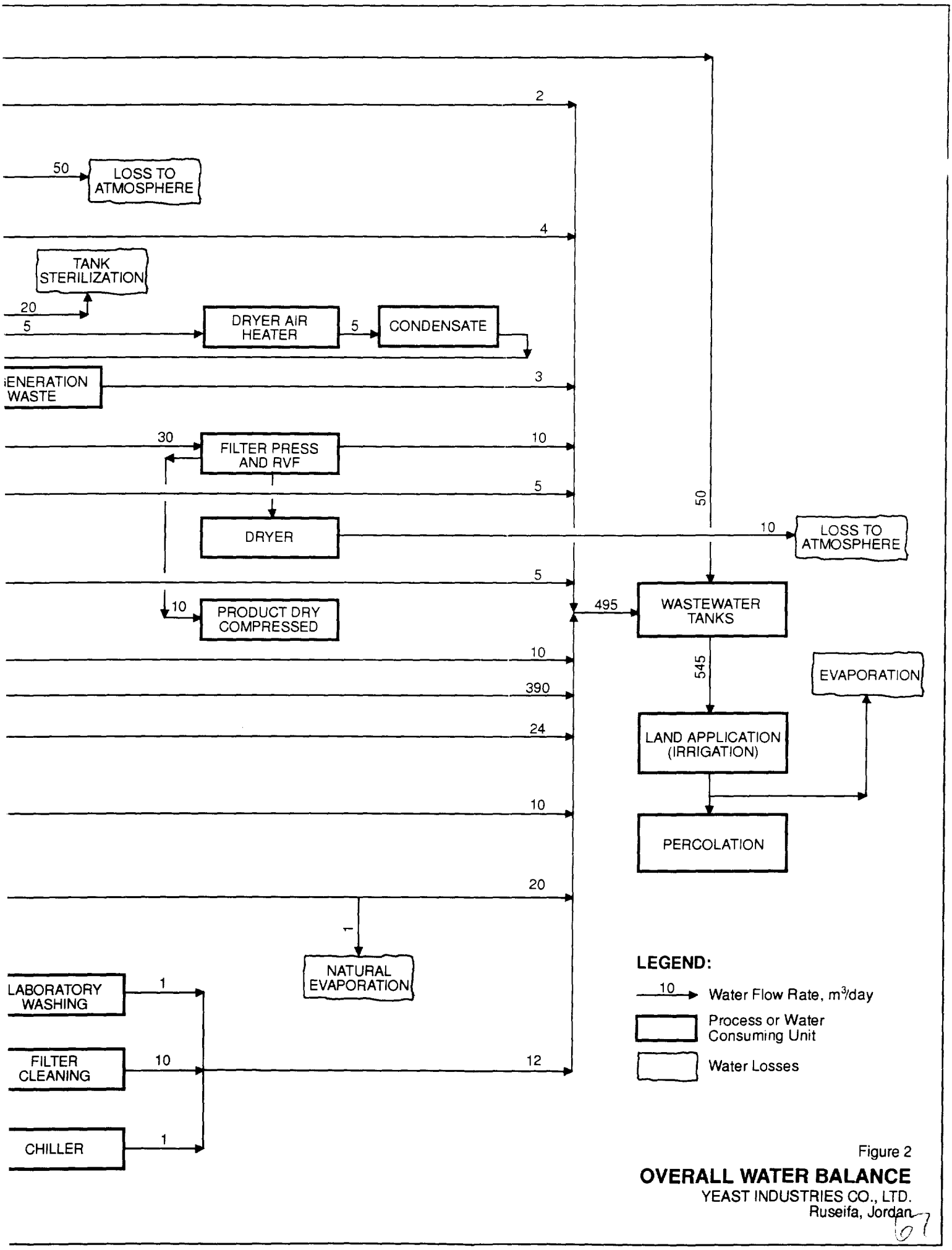

Figure 2

OVERALL WATER BALANCE

YEAST INDUSTRIES CO., LTD.
Ruseifa, Jordan

67

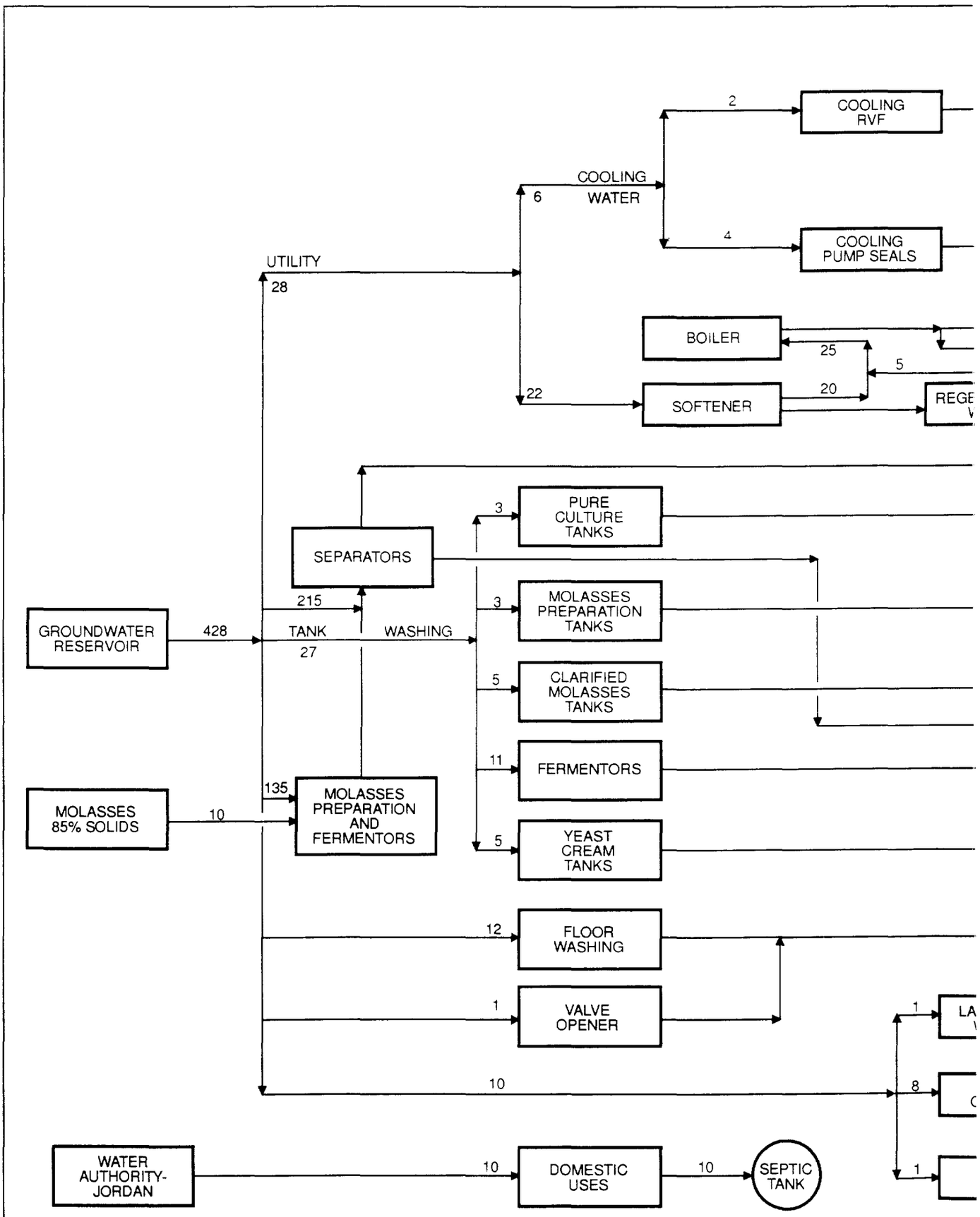

HARZA *Consulting Engineers and Scientists*

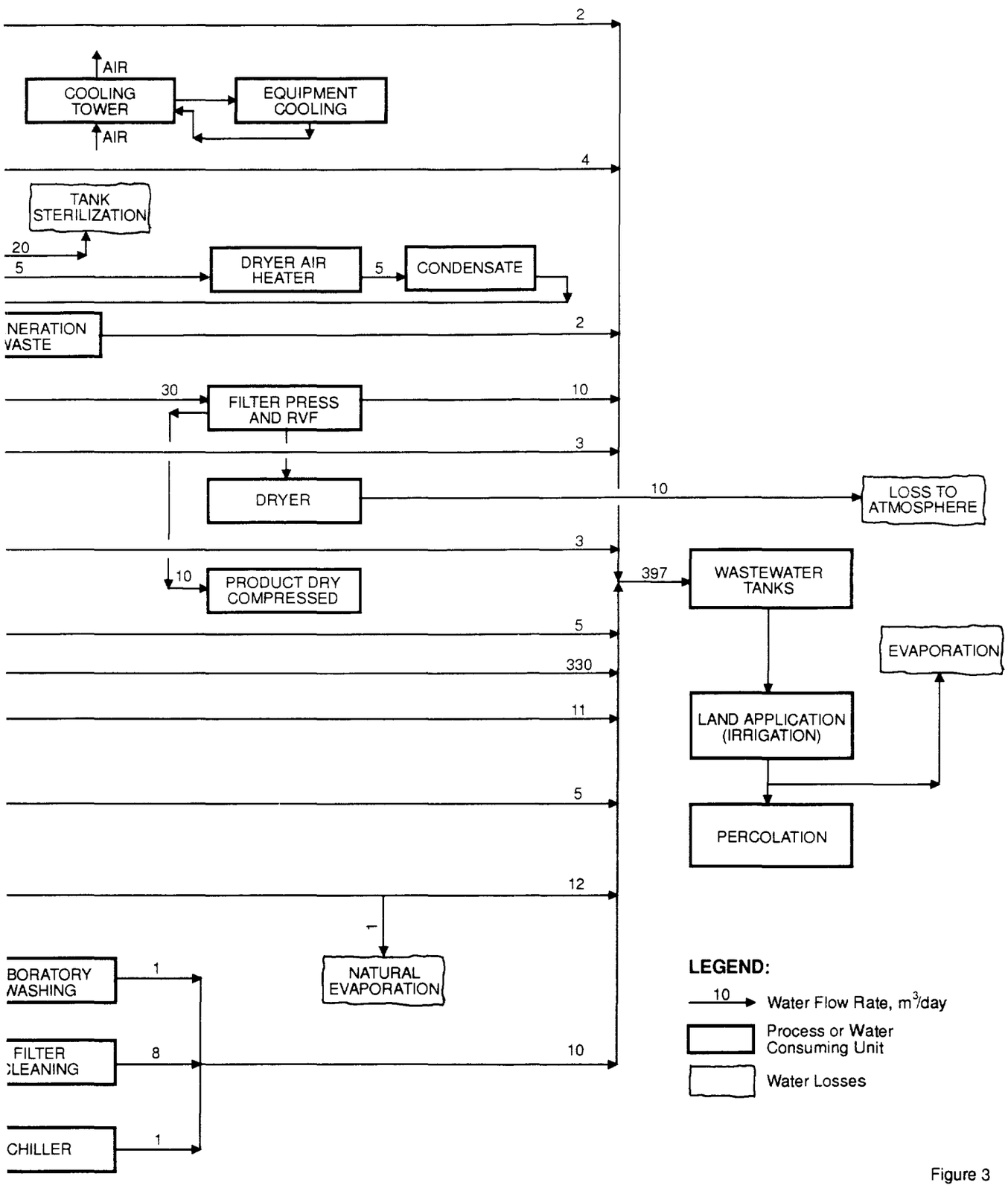

Figure 3

CONCEPTUAL WATER BALANCE

YEAST INDUSTRIES CO., LTD.
Ruseifa, Jordan

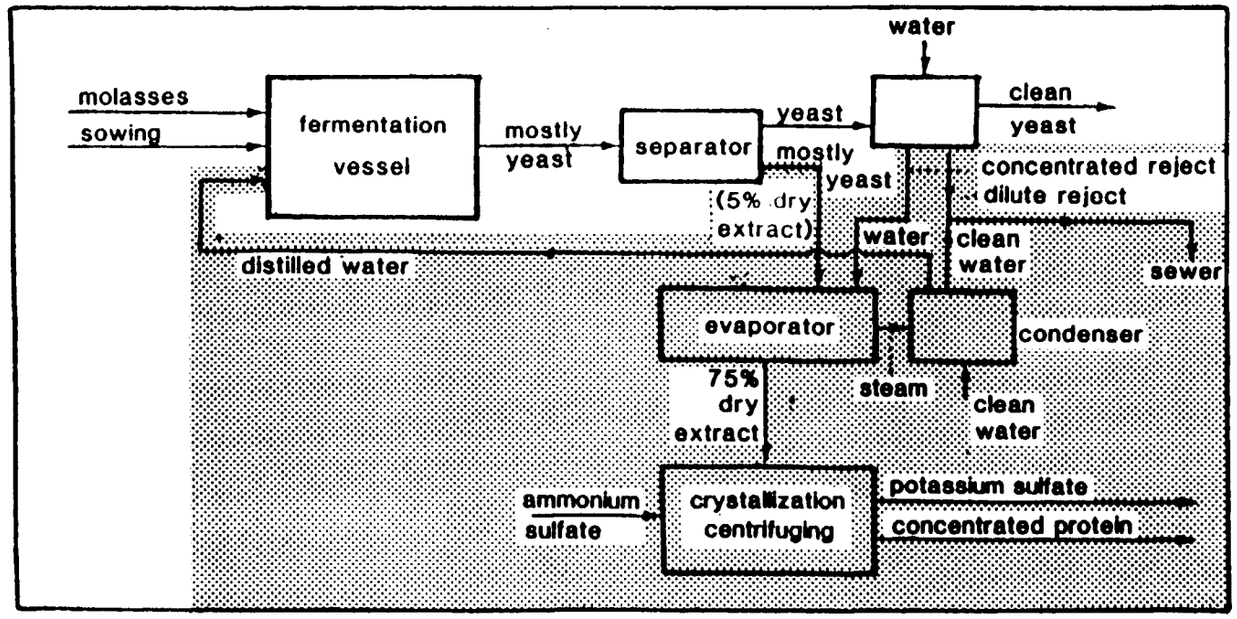

SOURCE: Overcash, M.R.
Techniques for Industrial Pollution Prevention

HARZA *Consulting Engineers and Scientists*

Figure 4
PROCESS WATER RECYCLE TECHNOLOGY FOR YEAST MANUFACTURING FACILITY
YEAST INDUSTRIES CO., LTD.
Ruseifa, Jordan

c:\jordan\fig2.pm5

WQICP WASTE MINIMIZATION AUDIT

Facility Name: Yeast Industries Company **Auditor/Firm:** Harza and RSS

Date: March 11, 1995

ATTACHMENT A
AUDIT QUESTIONAIRE

SITE DESCRIPTION

Facility Name: YEAST INDUSTRIES CO. LTD.

Area: 10,000 M2

Address:

Telephone: 885 114

Major Products: BAKERS YEAST (FRESH & DRY)

Production Rate: APPROX. 6000 TONS BASED ON FRESH YEAST

SIC Codes:

Major Sources of Wastewater Discharges:

YEAST CREAM SEPARATORS

TANK AND PROCESS LINES WASHINGS.

Major Processes:

- FERMENTATION
- SEPARATION
- FRESH YEAST PACKAGING
- DRYING & PACKAGING ACTIVEDRY / INSTANT YEAST

Facility/Equipment Age: 18 YEARS

WQICP WASTE MINIMIZATION AUDIT

Facility Name: Yeast industries Company Auditor/Firm: Harza and RSS

Date:

PROCESS INFORMATION

Operation Type: X- Continuous -- Discrete

-- Batch or Semi-Batch -- Other

Document	Complete? (Y/N)	Current? (Y/N)	Document Number
Process Flow Diagram	Y		
Material/Energy Balance	Y		
Design	-		
Operating	Y		
Flow/Amount Measurements	—		
Stream SEP 1	Y		
2	Y		
3	Y		
TOTAL EFFLUENT (4)	Y		
Analyses/Assays			
Stream 1	Y		
2	Y		
3 + 4	Y + Y		
Plant Layout	Y		
Process Description	Y		
Operating Manuals	Y		
Equipment List/Age	Y		
Equipment Specifications	Y		
Piping & Instrument Diagrams	Y		
Plot and Elevation Plan(s)	Y		
Environmental Audit Report	N		
Permit/Permit applications	Y		
Raw Material Inventory Records	Y		
Product Inventory Records	Y		
Management method practiced for	Y		
each wastewater stream	—		
Wastewater treatment facilities	Y- NOT OPERATING		
Waste management practice	Y- LAND APPLICATION		
Ancillary facilities			
Annual cost for management of	N/A		
the wastewater discharge			
Photographic records	Y		

WQICP WASTE MINIMIZATION AUDIT

Facility Name: Yeast Industries Company Auditor/Firm: Harza and RSS

Date: March 11, 1995

INPUT MATERIALS SUMMARY

Material	DESCRIPTION[1]		
	Stream No.	Stream No.	Stream No.
Name			
Source/Supplier			
Component of Concern			
Annual Consumption Rate			
Overall			
Component(s) of Concern			
Purchase Price, $ per			
Overall Annual Cost			
Delivery Mode[2]			
Shipping Container Size & Type[3]			
Storage Mode[4]			
Transfer Mode[5]			
Empty Container Disposal/Management			
Shelf Life			
Supplier Would			
- accept expired material (Y/N)			
- accept shipping containers (Y/N)			
Acceptable Substitute(s), if any			
Alternate Supplier(s)			
Product Inventory Records			

1. Stream number, if applicable, should correspond to those used on process flow diagram
2. e.g., pipeline, tank truck, etc.
3. e.g., drum, paper bag, tank, etc.
4. e.g., outdoor, warehouse, underground, aboveground, etc.
5. e.g., pump, forklift, conveyor, etc.
6. e.g., crush and dump, clean and recycle, return to supplier, etc.

WQICP WASTE MINIMIZATION AUDIT

Facility Name: Yeast Industries Company Auditor/Firm: Harza and RSS

Date: March 11, 19[illegible]

INDIVIDUAL WASTE STREAM CHARACTERIZATION

(page 1 of 4)

1. Waste Stream Name/ID: SEPARATOR 1 Stream No. 1

2. Waste Characterization (attach additional sheets with composition data, as necessary)

   --- Gas ✓ Liquid --- Solid --- Mixed phase

   Density kg/M^3 1,000 High Heating Value Cal/kg —
   pH 6.0 Flash Point — % Water ≥ 100 %

3. Waste Leaves Process as:

   -- air emission ✓ wastewater -- solid waste

4. Occurrence:
   -- continuous
   -- discrete
   discharge triggered by -- chemical analysis
   ✓ other (describe) FERMENTION CYCL

   Type -- periodic ✓ length of period 3 hrs Separation discharge
   -- sporadic

5. Generation Rate:
   Annual _____ kg per year
   Maximum _____ kg per _____
   Average _____ kg per _____
   Frequency 2 batches per day
   Batch Size 65-70 m^3 average _____ range

WQICP WASTE MINIMIZATION AUDIT

Facility Name: Yeast industries Company Auditor/Firm: Harza and RSS

Date: March 11, 1995

INDIVIDUAL WASTE STREAM CHARACTERIZATION

(page 2 of 4)

6. Waste Origins/Sources

Fill out this worksheet to identify the origin of the waste. If the waste is a mixture of waste streams, fill out a sheet for each of the individual waste streams.

Is the waste mixed with other wastes? ✓ Yes ---- No

Describe how the waste is generated.

AT THE END OF FERMENTATION BACTH, THE GROWN YEAST SEPARATED FROM THE LIQUOR IN THE FERMENTER. THE YEAST HARVESTED IN THE FORM OF CREAM @ 20 % SOLIDS AND THE REMAIND. OF THE FERMENTION LIQUOR IS DISCHARGED AS WASTE WATER (STREAM SEP 1)

Example: Formation and removal of an undesirable compound, removal of an unconverted input material, depletion of a key component, equipment cleaning waste, obsolete input material, spoiled batch and production run, spill or leak cleanup, evaporative loss, venting losses, etc.

WQICP WASTE MINIMIZATION AUDIT

Facility Name: Yeast Industries Company Auditor/Firm: Harza and RSS

Date: March 11, 1995

INDIVIDUAL WASTE STREAM CHARACTERIZATION

(page 3 of 4)

Waste Stream SEP 1

7. Management Method

Leaves site in
--- bulk
--- 55 gal drum
✓ other (describe) PIPE LINE

Disposal Frequency DAILY

Applicable Standards/Regs N/A

Managed
--- onsite --- offsite
✓ other (describe) LAND APPLICATION PROJECT (IRRIGATION)

Recycling
--- direct use/re-use
N/A --- energy recovery
--- redistilled
--- other (describe)

reclaimed material returned to site? N/A

--- Yes --- No --- used by others

residue yield
residue disposal

Treatment
--- biological
--- oxidation/reduction
--- pH adjustment
--- precipitation
✓ other (describe) LAND APPLICATION

Final Disposition
--- Dump
--- pond
--- other (describe) LAND

WQICP WASTE MINIMIZATION AUDIT

Facility Name: Yeast Industries Company Auditor/Firm: Harza and RSS

Date: March 11, 1995

INDIVIDUAL WASTE STREAM CHARACTERIZATION

(page 4 of 4)

cost as of _____ (quarter and year)

Cost Element	**Unit Price JD per ____**	**Reference/Source**
Onsite Storage & Handling		
Pretreatment		
Container		
Transportation Fee		
Disposal Fee		
Taxes		
Total disposal Cost		

N/A

WQICP WASTE MINIMIZATION AUDIT

Facility Name: Yeast industries Company Auditor/Firm: Harza and RSS

Date: _____

WASTE STREAM INFORMATION

(one form for each stream)

Stream ID: SEP1

1. Streamname: SEPARATOR No 1 / WASTE WATER
   (wastewater, waste oil, still bottoms, etc.)

2. Discharge Identification: YEAST SEPARATOR
   (Enter process or equipment from which stream is discharged)

3. Stream flow/quality:
   minimum flow: 380 L/min
   maximum flow: 585 L/min
   average flow: — L/min

4. Is stream continuous orintermittent? CONTINUOUS OVER PERIOD OF 2 - 3 HRS

5. Which of following is the cause of the waste?

   a. Process chemistry = (Reaction stoichiometry, kinetic, yield).
   Describe: REMAINS of MOLASSES AND OTHER RAW MATERIALS THAT ARE NOT ASSIMILATED BY YEAST.

   b. Engineering Design (capacity, pressure, temperature limitations, etc.). Describe: /

   c. Operations = (operating rates, order of addition, etc.) Describe: /

WQICP WASTE MINIMIZATION AUDIT

Facility Name: Yeast Industries Comp. Auditor/Firm: Harza and RSS

Date: March 11 1985

d. **Maintenance** = (leaks, spills, corrosion, etc.)
Describe: /

6. Are the components of the waste stream a raw material (RM), product (P), useful byproduct (UPB), nonuseful byproduct (NBP), solvent (S), catalyst (C), or an impurity (I) in the raw material?

(Attach analysis records if possible)

Fill out attached Figure 1 for each waste stream

Component Name	Conc (mg/L)	Check One						
		RM	P	UBP	NBP	S	C	I

7. Waste stream characteristics -- pH: 6.1 TSS: 2,116 TDS: 51,034
Color: BLACK Hardness: ____ Odor: ____ TOC: ____ Other: ____
COD 58,500 BOD 27,500

8. Current disposition of the stream: ALONG WITH OTHER STREAMS TO LAND APPLICATION PROJECT.

9. Current effluent criteria and disposal limitation: /

10. Permits relevant to the waste stream disposition: /

WQICP WASTE MINIMIZATION AUDIT

Facility Name: Yeast Industries Company Auditor/Firm: Harza and KSS

Date: March 11, 1995

11. Current cost of disposal and/or treatment for this waste stream:

/

12. If stream is currently being treated, list:

a. Current treatment parameters (chemical consumption, treatment conditions, etc.):

/

b. Existing treatment equipment (identify, size and type of equipment):

Other pertinent information:

WQICP WASTE MINIMIZATION AUDIT

Facility Name: Yeast Industries Corp Auditor/Firm: Haiza and RSS

Date: March 11, 1995

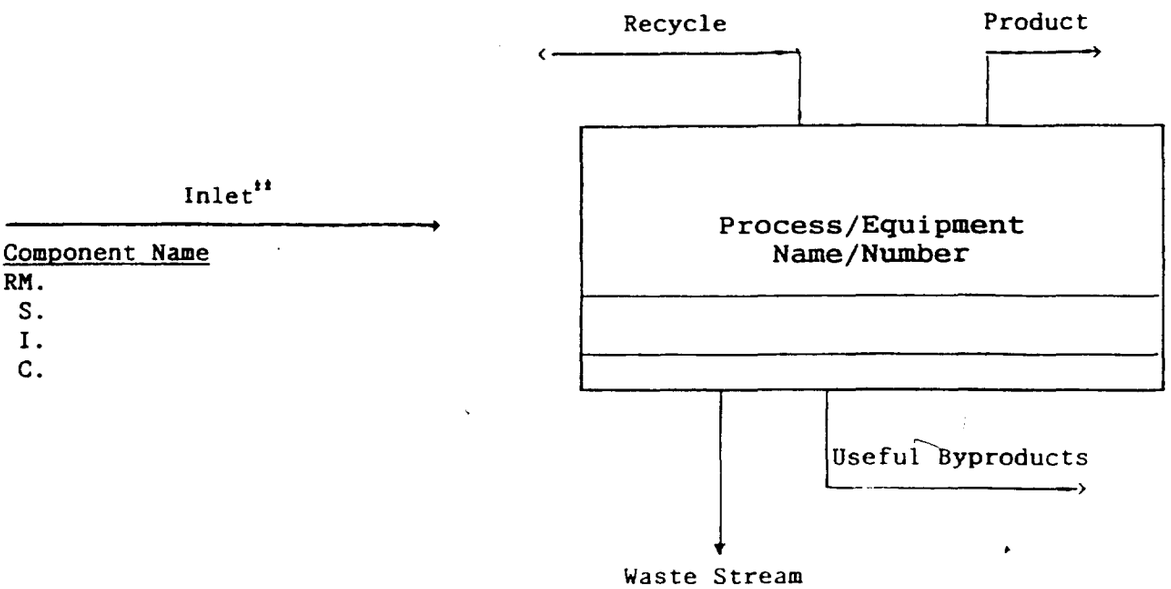

	Name	(mg/L)
RM		
C		
S		
I		
UBP		
NBP		
P		

where:

C = Catalyst

I = Impurity in the raw material

NBP = Non-useful by product

P = Product

RM = Raw material

S = Solvent

UBP= Useful byproduct

** If UBP, P, or NBP appears in the inlet/feed to a unit operation, then it was formed in the previous piece of equipment. Trace it back to the unit in which it was formed.

Figure 1

WQICP WASTE MINIMIZATION AUDIT

Facility Name: Yeast Industries Company Auditor/Firm: Harza and RSS

Date: March 14, 1995

WASTE STREAM SUMMARY

Component of Concerns	Stream No[1]	Stream No	Stream No
Waste ID/Name			
Source/Origin			
Annual Generation Rate (units_____)			
Overall			
Component(s) of Concern			
Cost of Disposal			
Unit Cost (JD per _____)			
Overall (per Year)			
Method of Management[2]			

Priority Rating Criteria[3]	W	Rating (R)	R*W	Rating (R)	R*W	Rating (R)	R*W
Regulatory Compliance							
Treatment/Disposal Cost							
Waste Quantity Generated							
Waste Hazard							
Safety Hazard							
Minimization Potential							
Potential Byproduct Recovery							
Sum of Priority Ranking Scores							
Priority Rank							

1. Stream number, if applicable, should correspond to those used on process flow diagrams.
2. For example, sanitary dump, onsite recycle, dewatering, etc.
3. Rate each stream (W) in each category on a scale from 0 to 10.

WQICP WASTE MINIMIZATION AUDIT

Facility Name: Yeast Industries Company Auditor/Firm: Harza and RSS

Date: March 11, 1995

OPTION DEVELOPMENT

Page 1 of 2

Meeting Format (e.g., brainstorming, nominal group technique) _____

Meeting Coordinator _____

Meeting Participants _____

List Suggested Options	Rationale/Remark on Option

WQICP WASTE MINIMIZATION AUDIT

Facility Name: Yeast Industries Company Auditor/Firm: Harza and RSS

Date: March 11, 1995

OPTION DEVELOPMENT

Page 2 of 2

Option Name: _____

Briefly describe the option _____

Waste Stream(s) Affected; _____

Input Material(s) Affected: _____

Product(s) Affected: _____

Indicate Type;--- Source Reduction
- --- Equipment-Related Change
- --- Personal/Procedure-Related Change
- --- Material-Related Change

--- Recycling/Reuse
- --- Onsite --- Material reused for original Purpose
- --- Offsite --- Material used for lower-quality Purp.
  - --- Material sold
  - --- Material burned for heat recovery

WQICP WASTE MINIMIZATION AUDIT

Facility Name: Yeast Industries Company Auditor/Firm: Herza and RSS

Date: March 11, 1995

INDIVIDUAL WASTE STREAM CHARACTERIZATION

(page 1 of 4)

1. Waste Stream Name/ID: SEPARATOR 2 Stream No. 2

2. Waste Characterization (attach additional sheets with composition data, as necessary)

   --- Gas ✓ --- Liquid --- Solid --- Mixed phase

   Density kg/M^3 1,000 High Heating Value Cal/kg ____
   pH 6.6 Flash Point ____ % Water 100%

3. Waste Leaves Process as:

   -- air emission ✓ -- wastewater -- solid waste

4. Occurrence:
   -- continuous
   -- discrete
   discharge triggered by -- chemical analysis ____
   ✓ -- other (describe) FERMENTATION CYCLES

   Type -- periodic ✓ length of period 3 hrs
   -- sporadic

5. Generation Rate:
   Annual ____ kg per year
   Maximum ____ kg per ____
   Average ____ kg per ____
   Frequency 2 batches per day
   Batch Size 65-70 m3 average ____ range

pH 6.6
COD 6,626
BOD 4,298
TDS 6,371
TSS 170

WQICP WASTE MINIMIZATION AUDIT

Facility Name: Yeast Industries Company Auditor/Firm: Haiza and RSS

Date: March 11, 1995

INDIVIDUAL WASTE STREAM CHARACTERIZATION

(page 2 of 4)

6. Waste Origins/Sources

Fill out this worksheet to identify the origin of the waste. If the waste is a mixture of waste streams, fill out a sheet for each of the individual waste streams.

Is the waste mixed with other wastes? ✓ Yes ---- No

Describe how the waste is generated.

THE CREAM FROM SEP 1 IS WASHED WITH FRESH WATER & THEN RESEPARATED TO YIELD CREAM AGAIN AND WASTE WATER (SEP 2)

Example: Formation and removal of an undesirable compound, removal of an unconverted input material, depletion of a key component, equipment cleaning waste, obsolete input material, spoiled batch and production run, spill or leak cleanup, evaporative loss, venting losses, etc.

WQICP WASTE MINIMIZATION AUDIT

Facility Name: Yeast Industries Company, Auditor/Firm: Harza and RSS

Date: March 11, 1995

INDIVIDUAL WASTE STREAM CHARACTERIZATION

(page 1 of 4)

1. Waste Stream Name/ID: SEPARATOR 3 Stream No. SEP 3

2. Waste Characterization (attach additional sheets with composit on data, as necessary)

   --- Gas ✓ -- Liquid --- Solid --- Mixed phase

   Density kg/M^3 1000 High Heating Value Cal/kg ___
   pH 6.8 Flash Point _____ % Water 100 ± 2

3. Waste Leaves Process as:

   -- air emission ✓ -- wastewater -- solid waste

4. Occurrence:
   -- continuous
   -- discrete
   discharge triggered by -- chemical analysis _____
   ✓ other (describe) FERMENT. 30 J CYC E

   Type -- periodic ✓ length of period 3 hrs
   -- sporadic

5. Generation Rate:
   Annual _____ kg per year
   Maximum _____ kg per _____
   Average _____ kg per _____
   Frequency 2 batches per day
   Batch Size 65-70 m^3 average _____ range

pH 6.8
COD 1,370
BOD 960
TDS 1175
TSS 151

WQICP WASTE MIN MIZATION AUDIT

'acility Name: Yeast Industries Co. ...Auditor/Firm: Horza and RSS

Date: March 11 1995

INDIVIDUAL W STE STREAM CHARACTE ZATION

(page of 4)

6. Waste Origins/Sources

Fill out this worksheet to entify the origin of the waste. If the waste is a mixture of w ste streams, fill out a sheet for each of the individual waste str ms.

Is the waste mixed with oth r wastes? ✓--- Yes ---- No

Describe how the waste is generated.

CREAM FROM SEP 2 IS REWASHED WITH FRESH WATER & THEN RESEPARATED TO YIELD CREAM AND W/W. (SEP 3)

Example: Formation and removal of an undesirable comp und, removal of an unconverted input material, de letion of a key component, equipment cleaning waste, c solete input material, spoiled batch and productio run, spill or leak cleanup, evaporative loss, ver ing losses, etc.

WQICP WASTE MINIMIZATION AUDIT

Facility Name: Yeast Industries Company Auditor/Firm: Harza and RSS

Date: March 11, 1995

INDIVIDUAL WASTE STREAM CHARACTERIZATION

(page 1 of 4)

1. Waste Stream Name/ID: FINAL EFFLUENT Stream No. _____

2. Waste Characterization (attach additional sheets with composition data, as necessary)

   --- Gas ✓ Liquid --- Solid --- Mixed phase

   Density kg/M^3 1,000 High Heating Value Cal/kg ____
   pH 6.25 Flash Point _____ % Water 1,000

3. Waste Leaves Process as:

   -- air emission ✓ wastewater -- solid waste

4. Occurrence:
   -- continuous
   -- discrete
   discharge triggered by -- chemical analysis _____
   ✓ other (describe) FERMENTATION CYCLES

   Type -- periodic ✓ length of period 3 hrs
   -- sporadic

5. Generation Rate:
   Annual _____ kg per year
   Maximum _____ kg per _____
   Average _____ kg per _____
   Frequency 2 batches per day
   Batch Size 450 – 500 m^3 average _____ range

WQICP WASTE MINIMIZATION AUDIT

Facility Name: Yeast Industries Corp. Auditor/Firm: Harza and RSS

Date: March 11, 1995

INDIVIDUAL WASTE STREAM CHARACTERIZATION

(page 2 of 4)

6. Waste Origins/Sources

Fill out this worksheet to identify the origin of the waste. If the waste is a mixture of waste streams, fill out a sheet for each of the individual waste streams.

Is the waste mixed with other wastes? ✓ Yes ---- No

Describe how the waste is generated.

W/U FROM SEP 1-2-3 PLUS ALL TANK WASHINGS
FACTORY FLOOR WASHING, PUMPS COOLING ETC
IS COLLECTED AND LABELLED AS
FINAL EFFLUENT

Example: Formation and removal of an undesirable compound, removal of an unconverted input material, depletion of a key component, equipment cleaning waste, obsolete input material, spoiled batch and production run, spill or leak cleanup, evaporative loss, venting losses, etc.

WQICP WASTE MINIMIZATION AUDIT

Facility Name: Yeast Industries Company Auditor/Firm: Harza and RSS

Date: March 11, 1995

INDIVIDUAL WASTE STREAM CHARACTERIZATION

(page 3 of 4)

Waste Stream FINAL EFFLUENT

7. Management Method

Leaves site in
--- bulk
--- 55 gal drum
✓ other (describe) PIPELINE

Disposal Frequency DAILY

Applicable Standards/Regs N/A

Managed
--- onsite --- offsite
✓ other (describe) LAND APPLICATION PROJECT (IRRIGATION)

Recycling
--- direct use/re-use
N/A --- energy recovery
--- redistilled
--- other (describe)

reclaimed material returned to site? N/A

--- Yes --- No --- used by others

residue yield
residue disposal

Treatment
--- biological
--- oxidation/reduction
--- pH adjustment
--- precipitation
✓ other (describe) LAND APPLICATION

Final Disposition
--- Dump
--- pond
✓ other (describe) LAND

WQICP WASTE MINIMIZATION AUDIT

Facility Name: Yeast Industries Company Auditor/Firm: Harza and RSS

Date: March 11, 1995

WASTE STREAM INFORMATION

(one form for each stream)

Stream ID: _____

1. Streamname: FINAL EFFLUENT / WASTE WATER
   (wastewater, waste oil, still bottoms, etc.)

2. Discharge Identification: ALL FACTORY OPERATIONS
   (Enter process or equipment from which stream is discharged)

3. Stream flow/quality:
   minimum flow: _____ L/min
   maximum flow: _____ L/min
   average flow: 1250 L/min

4. Is stream continuous orintermittent? CONTINUOUS OVER 24 HRS

5. Which of following is the cause of the waste?

   a. Process chemistry = (Reaction stoichiometry, kinetic, yield).
   Describe: FERMENTATION RESIDUALS - TANK WASHINGS

   b. Engineering Design (capacity, pressure, temperature limitations, etc.). Describe: _____

   c. Operations = (operating rates, order of addition, etc.) Describe: _____

WQICP WASTE MINIMIZATION AUDIT

Facility Name: Yeast Industries Company **Auditor/Firm:** Harza and RSS

Date: March 11, 1995

d. Maintenance = (leaks, spills, corrosion, etc.)
Describe: _____

6. Are the components of the waste stream a raw material (RM), product (P) useful byproduct (UPB), nonuseful byproduct (NBP), solvent (S), catalyst (C), or an impurity (I) in the raw material?

(Attach analysis records if possible)

Fill out attached Figure 1 for each waste stream

Component Name	Conc (mg/L)	Check One						
		RM	P	UBP	NBP	S	C	I

7. Waste stream characteristics -- pH: 6.25 TSS: 752 TDS: 14,356
Color: BLACK Hardness: ____ Odor: ____ TOC: ____ Other; ____
BOD 8,650 COD 16,807

8. Current disposition of the stream: TO LAND APPLICATION SITE

9. Current effluent criteria and disposal limitation: /

10. Permits relevant to the waste stream disposition: /

YEAST INDUSTRIES CO. LTD.
P. O. Box 9310
Amman - 11191 Jordan

شركة مصانع الخميرة محدودة المسؤولية
ص.ب ٩٣١٠
عمان ١١١٩١ الاردن

للانتباه: الدكتور رياض موسى / سلطة المياه

The plant discharges approximately 500 m^3 of waste water per day of operation. The sources of this waste water are estimated as follows:

Source	m^3/day
Yeast Separators (3)	370
Tank cleaning & washing	60
Filter press and RVF	10
Factory floor washing	20
Miscellaneous	40

عمان تلفون ٨٨٥١١٤ - ٦٣٩٠٥٣ - فاكس ٨٨٥٣٢٥ - تلكس ٢١٧٥٣
Tel (6) 885114 - (6) 639053 Telex 21753 YEAST JO. Fax. (6) 885325

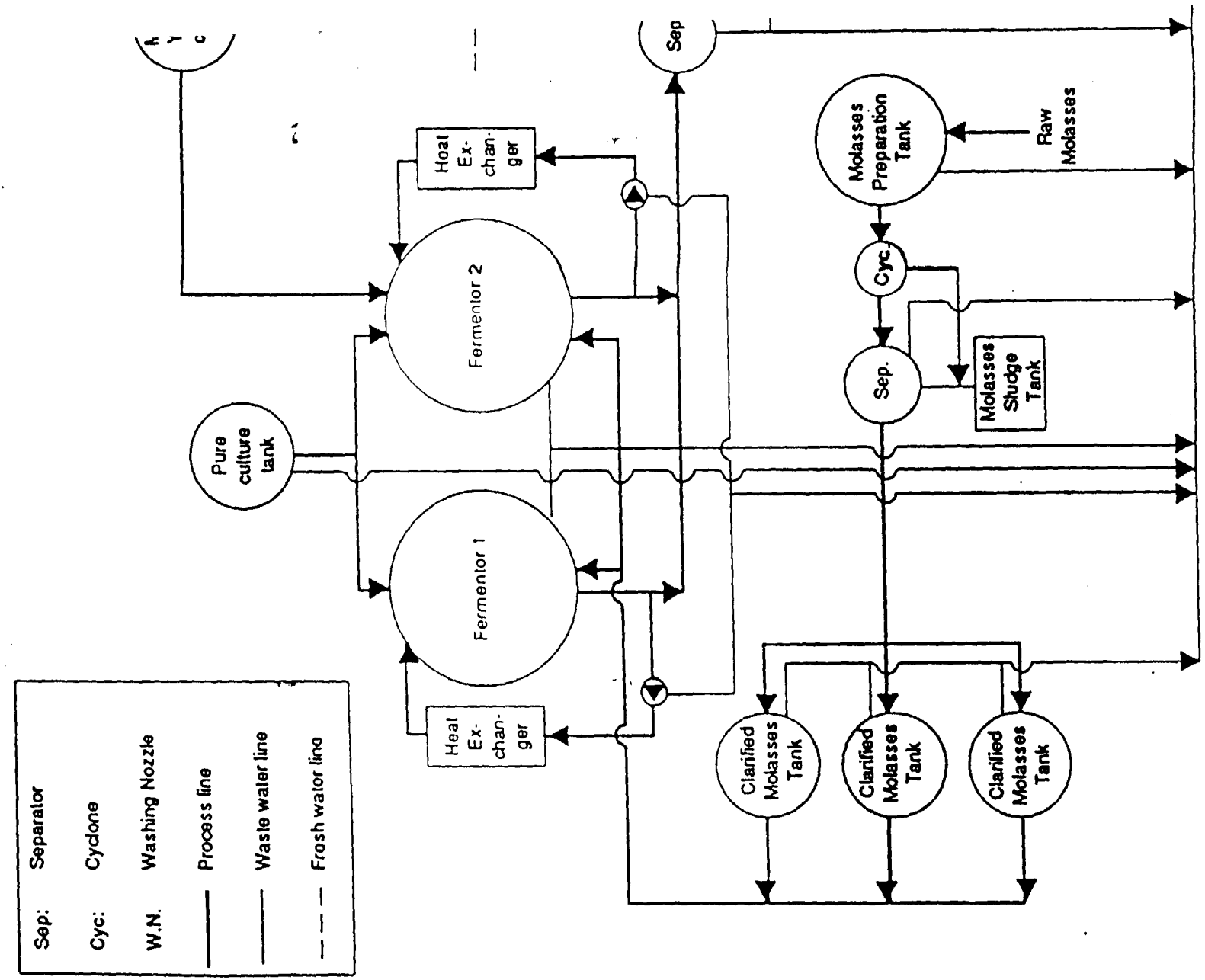

Figure 32.1 Yeast Industries Co. Ltd. Flow Sheet of Production Process.

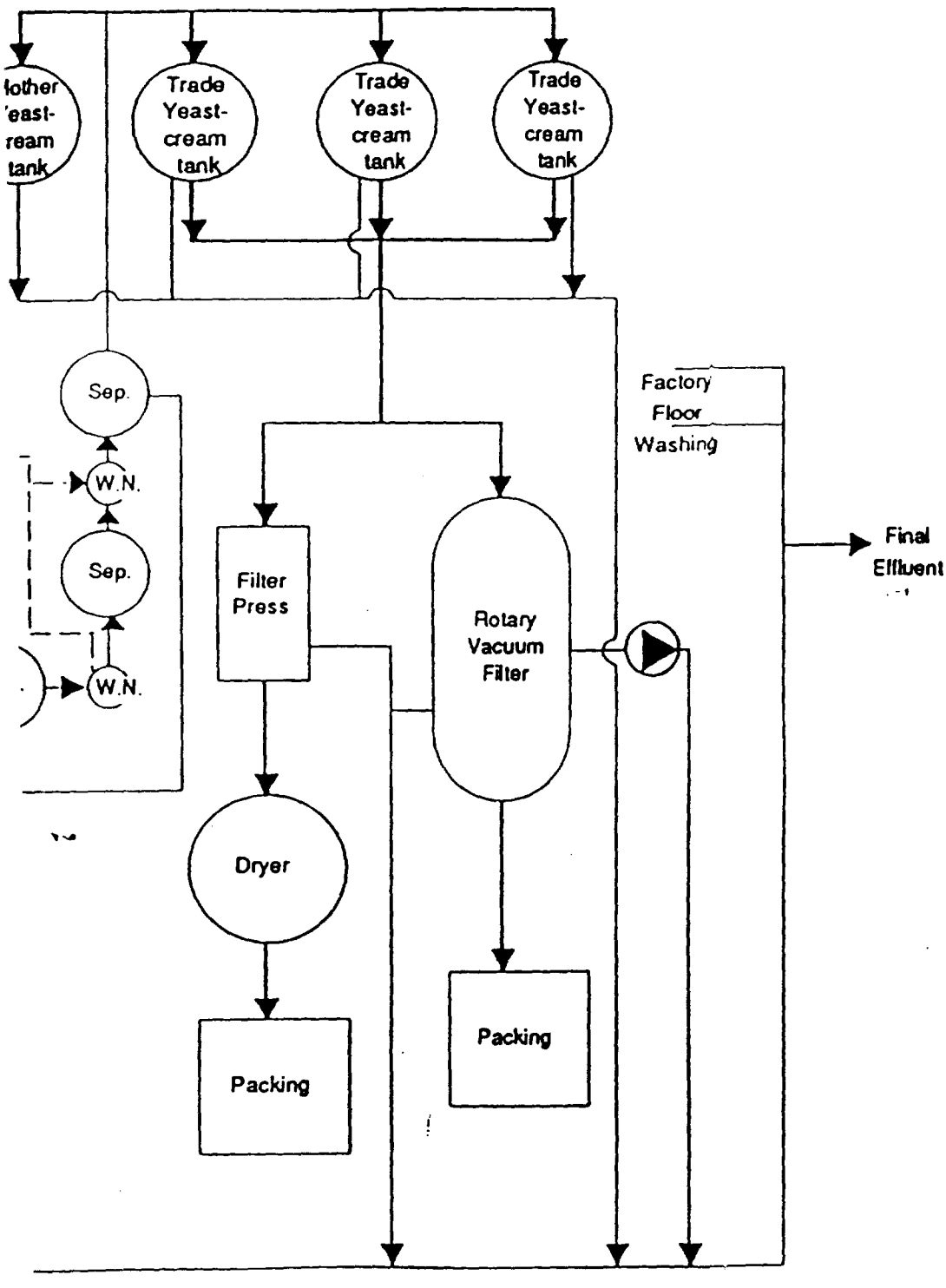
Trade Yeast-cream tank
Trade Yeast-cream tank
Trade Yeast-cream tank
Sep.
W.N.
Sep.
W.N.
Filter Press
Rotary Vacuum Filter
Factory Floor Washing
Final Effluent
Dryer
Packing
Packing

2. Process Description

Starting culture grown in the laboratory is added to the sterilized nutrient solution (water, molasses and nutrients) in the Pure Culture Tank ($9m^3$) and left to ferment for 24 hours, after which all the content of this tank is transfered to one of the two existing continuous fed Fermentors ($110\ m^3$ each). In this Fermentor, preparation of the mother yeast is carried out by gradual and continuous fed of sterilized fresh water, clarified liquid molasses and nutrients (urea, mono ammonium phosphate, potassium chloride, magnesium sulphate, and vitamins) to the pure culture and allowing the yeast to grow under aerobic conditions until maximum cell multiplication is attained. Temperature of the fermentors contents is kept constant around 30^0C by means of circulating the content of the tank through a heat exchanger unit.

When the process is completed, the yeast is then separated from the spent nutrient solution using three centrifugal separator working in series. After the first and second separators, separated yeast cream is washed with fresh water and reseparated. The mother yeast cream is then stored at $2\text{-}3^0C$ in a cold tank ($19m^3$). The resulting yeast cream is used as an inoculant for the production of six generations of trade yeast. The same fermentation and separation processes mentioned above in preparing the mother yeast cream are repeated in producing trade yeast cream. Dry matter content of the yeast cream is about 15-20 percent by weight. Trade yeast cream is stored in three cooled tanks ($19m^3$ each) similar to the mother yeast cream tank.

For the production of dry active yeast or instant yeast, trade yeast cream is filtered through a Filter Press unit, which result in a firm product with a dry matter content between 30-32 percent. The yeast cake is removed from the presses, grinded and extruded through a screen and then dryed using a fluidized bed dryer . The dry yeast is then transfered to the packing machine. For the production of fresh yeast, trade yeast cream is filtered on a Rotary

Vacuum Filter. The yeast is then scraped from the rotary filter for packing.

Molasses used is either cane or beet molasses. Raw molasses is diluted with fresh water to reduce its dry matter content form 85 percent to about 35 percent and sterilized in the Molasses Preparation Tank ($18m^3$). The Molasses is then clarified through a cyclone and a separator. Clarified liquid molasses is stored in three tanks ($6.5m^3$ each) to be used later in the Fermentors for the preparation of mother or trade yeast.

YEAST INDUSTRIES CO. LTD.

P. O. Box 9310

Amman - 11191 Jordan

شركة مصانع الخميرة محدودة المسؤولية

ص.ب ٩٣١٠

عمان ١١١٩١ الاردن

Steps taken to minimize waste at Yeast Industries Co.Ltd.

1-Optimizing fermentation yields by installation of instrument to control and monitor fermenter operations.

2-Sugar recovery from molasses sludge.The use of a " Decanter "is currently under investigation to reclaim some of the sugars lost with the molasses sludge during clarification of the molasses.

3-Reduction of salts level used for yeast growth e.g.Potassium Chloride.

4-Relocation of yeast filter press to avoid spills of yeast and loss of press cake.

5-installation of a new fresh yeast packaging line which will reduce lost fresh yeast during packaging operations.

The Hashemite Kingdom of Jordan
National Planning Council

FEASIBILITY STUDY

ZARQA – RUSEIFA

WATER DISTRIBUTION, SEWERAGE AND STORMWATER SYSTEMS

DRAFT

INDUSTRIAL EFFLUENTS TREATMENT REPORT

MALCOLM PIRNIE, INC.
in association with
JOUZY & PARTNERS

1980
Amman - Jor

MALCOLM PIRNIE, INC. IN ASSOCIATION WITH JOUZY & PARTNERS
ULTING ENVIRONMENTAL ENGINEERS CONSULTING ENGINEERING BURE
ELEPHONE 62818 / 63902 TELEX 21381 JOUZY JO
P. O. BOX 9112 AMMAN - JORDAN

His Excellency President
Dr. Hanna Odeh
National Planning Council
P.O.Box 555
Amman - Jordan

May 31, 1980

Re: Feasibility Studies of the Municipal Water Distribution Improvements and Sewerage and Stormwater Drainage Systems in Zarqa and Ruseifa, Jordan

Dear Dr. Odeh,

In accordance with our Agreement, we are pleased to submit the Draft Industrial Effluents Treatment Report.

The purpose of this Report is to investigate and evaluate the industrial effluents discharged from the many industrial establishments within the Planning Area.

The Report determines which industries discharge effluents which would be deleterious to the proposed waste-water treatment plant and recommends what type of pretreatment or individual treatment will be required to provide an effluer acceptable for the treatment plant or for discharge directly to a waterway.

The recommendations are summarized in Table I-5.1.

We wish to thank the NPC staff, Ministry of Trade and Industries, Municipalities of Zarqa and Ruseifa, the Royal Scientific Society, the industries, and the many others who have assisted us during this project.

Respectfully Submitted,

Martin P. Daly
Resident Project Manager
Malcolm Pirnie, Inc.

Najeeb F. Tleel
Deputy Project Manager
Jouzy and Partners.

INDUSTRIAL EFFLUENTS TREATMENT REPORT

TABLE OF CONTENTS

SECTION	DESCRIPTION	PAGE
	TABLE OF CONTENTS	i
	LIST OF TABLES	ii
	LIST OF FIGURES	iii
	LIST OF APPENDICES	iv
1.0	INTRODUCTION	1-1
	1.1 Background	1-1
	1.2 Report Organization	1-2
	1.3 Authorization	1-2
	1.4 Purpose and Objective	1-2
	1.5 Scope of Work	1-2
2.0	EXISTING INDUSTRIAL SETTING	2-1
	2.1 General Description of Planning Area	2-1
	2.2 Water Use and Wastewater Flow	2-2
	2.3 Raw Waste Loads	2-3
	2.4 Wastewater Characterization	2-4
	2.5 Detailed Description of Each Industry	2-6
3.0	PROJECTED INDUSTRIAL SETTING	3-1
	3.1 Anticipated Growth	3-1
	3.2 Conservation Measures	3-2
	3.3 Discussion By Specific Industry	3-5
4.0	ALTERNATIVE APPROACHES TO INDUSTRIAL WASTEWATER MANAGEMENT	4-1
	4.1 Strategies	4-1
	4.2 Individual Pretreatment	4-5
	4.3 Localized Pretreatment	4-18
	4.4 Individual Treatment/Disposal	4-21
	4.5 Analysis Of Alternatives	4-28

TABLE I-2.2 PRESENT AVERAGE DAILY INDUSTRIAL WATER USE AND WASTEWATER FLOW

INDUSTRY	WATER USE (M^3/DAY)			WASTEWATER FLOW (M^3/DAY)				
	MUNICIPAL SUPPLY	PRIVATE WELL	TOTAL	CONSUMED IN PRODUCT	SANITARY DISCHARGE	PROCESS DISCHARGE	COOLING	TOTAL DISCHARGE
Ruseifa								
Yeast Industries Co.	0.02*	113++	113.02	-	0.02	112++	1.0++	113.0
Phosphate Mill	-	1800+	1800	100	16	1680+	-	1696.0
Oriental Star Distillery	0.5*	29+	29.5	0.3	0.2	8.2	21.0	29.4
Hussein Industrial City								
Detergent Factory	-	48.0	48.0	9.0	1.0	38.0	-	39.0
Soap Factory		504.9	504.9	-	0.9	312.0**	192.0	504.9
Ice Cream Factory	-	30.0	30.0	5.4	1.0	4.0	19.6	24.6
Cosmetics Factory	-	1.5	1.5	0.7	0.6	0.2	-	0.8
Paint Factory	-	3.0	3.0	0.3	0.5	1.5	1.0	3.0
Oriental Mineral Water Fact. (7-Up)	38.0*	58.0	96.0+	3.0	1.0	92.0	-	93.0
Transjordan Mineral Research Co.	0.2*	4.0	4.2	4.0	0.2	-	-	0.2
Jordan Overall Co.	1.5	12.0	13.5	-	1.5	12.0	-	13.5
Jordan Dairy Co.	1.9*	250.0+	251.9	150.0	1.9	100.0	-	101.9
Jordan Worsted Mills	-	93.0	93.0	-	6.0	87.0	-	93.0
Sultan Plastic Co.	0.6*	-	0.6	-	0.6	-	-	0.6
Subtotal	42.72	2946.4	2989.1	272.7	31.4	2446.9	234.6	2712.9

* metered
** measured
\+ industry estimate
++ MPI estimate

TABLE I-2.3 SUMMARY OF PRESENT INDUSTRIAL RAW WASTE LOADS

INDUSTRY	POLLUTANT LOAD				
	BOD_5		TSS		OTHE
	Kg/Day	% Industrial Total	Kg/Day	% Industrial Total	Parameter
Ruseifa					
Yeast Industries Co.	300	5.9	100	0.1	*
Jordan Phosphate Co.	*	*	252,000	97.0	*
Oriental Star Distillery	4.9	0.1	5.3	0.1	*
Hussein Industrial City					
Detergent Factory	1.3	0.02	1.3	0.1	*
Soap Factory	100	1.9	20	0.1	COD Oil & Grease
Ice Cream Factory	41	0.8	16	0.1	*
Cosmetics Factory	*	*	*	*	*
Paint Factory	*	*	4.5	0.1	Oil & Grease
Oriental Mineral Water Fact.	91	1.8	45	0.1	*
Jordan Overall Co.	*	*	*	*	Oil & Grease Fe
Jordan Dairy Co.	520	10.3	210	0.1	*
Jordan Worsted Mills	54	1.0	360	0.14	Oil & Grease Zn
Subtotal	1,112	21.9	252,763	97.3	*
Awjan al Janubi					
Noralux Ind. Comm. Co.	-	*	3.6	0.1	*
Cream Tex	5.3	0.1	1.7	0.1	*
Subtotal	5.3	0.1	5.3	.1	*
Awjan esh Sharqi					
Jordan Tanning Co.	710	14.0	860	.33	Oil & Grease Sulfide Cr (total)
Jordan Paper & Cardboard	420	8.3	5,100	2.0	*
Jordan Iron and Steel Co.	*	*	310	0.1	Oil & Grease
Jordan Match Co.	*	*	*	*	*
Jordan Chemical Ind.	*	*	290	0.1	NaCl Hg
Jordan Army Blanket	89	1.7	250	0.1	Cu Cr Zn
Jordan Polymer	*	*	*	*	*
Clenkers, Ltd.	*	*	18	0.1	*
Subtotal	1,219	24.0	6,828	2.6	*
Awjan al Gharbi					
United Factories, Ltd.	1,000	19.7	1.4	0.1	*
Imperial Underwear	18	0.3	5.7	0.1	Oil & Grease Cu Zn
Arab Breweries Co.	120	2.4	46	0.1	*
Jordan Brewery Co., Ltd.	190	3.7	77	0.1	*
Eagle Distilleries	1,400	27.6	17	0.1	*
Zeidan Refrigeration	4	.07	1.6	0.1	*
Subtotal	2,732	54	149	0.1	*
TOTAL (STUDY AREA)	5,068	100	259,745	100	*

* - Negligible

2.4.3 Oriental Mineral Water Factories (7-Up)

The high solids content of the sample dated 6/16/79 in Table I-A.2.1 is believed to be caused by the batch discharge of sludge from the lime-soda water softening system and was therefore excluded from the mean calculation.

2.4.4 Jordan Dairy Co.

The highly variable total solid and suspended solids concentrations observed in Table I-A.2.1 are not considered unusual due to the batch discharge nature of the process. The high solids and suspended solids observed in the sample dated 9/16/79 probably correspond to a discharge of cheese whey, lebeneh solids, or brine solution from chees making.

2.4.5 Jordan Worsted Mills

The highly variable nature of the suspended solids content of this wastewater (see Table I-A.2.1 and I-A.2.2) is due to the heavy scour process and difficulties in obtaining a representative sample aliquote for analysis due to the floating nature of the woolen fibers which comprises most of the solids load.

2.4.6 Eagle Distilleries

BOD_5 analyses presented in Tables I-A.2.1 and I-A.2.2 are belie be unrepresentatively low. This observation is made from examination of the BOD curves which show a "lag" for the first several days follow by rapid oxyden uptake. This indicates a poor "seed" or biological inhibition due to pH or some other chemical parameter.

2.5 DETAILED DESCRIPTION OF EACH INDUSTRY

Detailed descriptions of manufacturing processes, production, wa use, and wastewater treatment and disposal practices are presented in following subsections.

2.5.1 Yeast Industries Co., Ltd.

Yeast Industries Co., Ltd. operates a facility producing fresh a dry bakers yeast. The facility is located on the north bank of the Za River in an agricultural area near the western perimeter of the Ruseif Municipality. The facility operates 24 hours per day, 6 days per week

The manufacturing process consists of preparing a nutrient solut from beet molosses, phosphates, magnesium sulfate, and ammonium sulfat into which yeast "seed" is placed. The yeast metabolizes the nutrient

solution in the fermentation process which is operated at controlled temperature and pH for maximum cell growth. Sulfuric acid is used to maintain an acidic pH. Following fermentation, cultivated yeast is separated from the nutrient solution by vacuum filtration compressed or dried and packaged for sale. The spent nutrient solution is discharged directly to the Zarqa River.

Other process wastewater sources are tank and floor wash, and boiler blowdown. Total process wastewater flow is estimated at approx mately 112 m^3/day. Non-contact cooling water is recirculated through a cooling tower.

All process water reqirements are supplied by a private well. A minor amount of Ruseifa municipal water is used for sanitary purpose

2.5.2 Jordan Phosphate Mines Co., Ltd.

The Jordan Phosphate Mines Co., Ltd. is one of the major industr in the Planning Area employing about 823 and operating a phosphate roc beneficiation plant, screening and drying facilities, and a superphosp bagging facility. (refer to Figure I-2.1 for locations). All active mining in the Planning Area has ceased with present and future strip mining confined to the area south of the Amman-Zarqa Highway between Marka and Wadi al Ushsh. Jordan Phosphate previously operated a pilot plant for superphosphate manufacture but this facility has been perman shut down. Superphosphates for the bagging facility are imported.

Annual mine production is approximately 750,000 dry tonne/year. Two standard grades of phosphate rock are produced from screening and drying:

- 66 - 68% bone phosphate of lime (bpl)
- 70 - 72% bpl

Coarse (plus ½") phosphate rock from screening is stockpiled for futur beneficiation by calcination or flotation processes.

The beneficiation plant and offices are located on the Zarqa-Rus Road on the western edge of Ruseifa proper. The beneficiation process consists of wet screening, hydro-sizing, and drying to produce a fine phosphate "concentrate". The beneficiation plant dryer (No. 5) is equ with an electrostatic precipitator (ESP) for air pollution control. E phosphate dust is sold as a by-product under the trade name "Jorphos". beneficiation plant has a nominal capacity of 320,000 tonne/yr and cur operates at approximately 70% capacity.

TABLE I-3.1 PROJECTED AVERAGE DAILY INDUSTRIAL WATER DEMAND AND WASTEWATER FLOW

INDUSTRY	WATER DEMAND (M^3/DAY)			WASTEWATER FLOW (M^3/DAY)		
	1984	1990	2000	1984	1990	2000
Ruseifa						
Yeast Industries Co. Ltd.	113	150	205	113	150	205
Jordan Phosphate Co.	4900	4900	4900	4630	4630	4630
Oriental Star Distillery	44*	28+	39+	44	32+	39+
Hussein Ind. City (I.C.A.)						
Detergent Factory	96*	96+	96+	78	78+	78+
Soap Factory	1515	99+	138+	1515	99+	138+
Ice Cream Factory	30*	16+	22+	25*	8+	11+
Cosmetic Factory	2	2	3	1	1	2
Paint Factory	3	4	6	3	4	6
Oriental Mineral Water Factories (7-Up)	200*	200	200	200	200	200
Transjordan Minerals Research Co.	4	5	8	1	1	2
Jordan Overall Co. Ltd.	17	1	1	17	1	1
Jordan Dairy Co. Ltd.	260	340	410	115	150	210
Jordan Worsted Mills	93	120	170	93	120	170
Sultan Plastics Co.	1	1	1	1	1	1
Subtotal	7278	5962	6199	6836	5475	5693

TABLE I-3.2 SUMMARY OF PROJECTED INDUSTRIAL RAW WASTE LOADS

INDUSTRY	POLLUTANT LOAD (KG/DAY) BOD5			TSS			OTHER		
	1984	1990	2000	1984	1990	2000	Parameter	1984	1990
Ruseifa									
Yeast Industries Co.	500	390	540	100	130	180	*	*	*
Jordan Phosphate Co.	*	*	*	686,000	686,000	686,000	*	*	*
Oriental Star Distillery	10	10	12	10	12	12	*	*	*
Hussein Industrial City									
Detergent Factory	3	4	5	3	4	5	*	*	*
Soap Factory	100	130	180	20	34	65	COD	290	340
							Oil & Grease	7	8
Ice Cream Factory	41	53	74	16	21	29	*	*	*
Cosmetics Factory	*	*	*	*	*	*	*	*	*
Paint Factory	*	*	*	5	6	8	*	*	*
Oriental Mineral Water Fact.	550	550	550	270	270	270	*	*	*
Jordan Overall Co.	*	*	*	*	*	*	*	*	*
Jordan Dairy Co.	520	680	940	210	280	380	*	*	*
Jordan Worsted Mills	54	71	98	360	470	650	Oil & Grease	13	17
Subtotal	1,578	1,868	2,399	686,994	687,225	687,599	*	*	*
Awjan esh Sharqi									
Jordan Tanning Co.	770	930	1,290	930	1,130	1,560	Sulfide	280	340
							Oil & Grease	120	140
							Chromium	32	39
Jordan Paper & Cardboard	500	300	300	6,080	3,660	3,660	*	*	*
Jordan Iron & Steel Co.	*	*	*	310	310	310	Oil & Grease	50	50
Jordan Match Co.	*	*	*	*	*	*	*	*	*
Jordan Chemical Ind.	*	*	*	340	370	510	Mercury	0.72	0.78
							NaCl	550	600
Jordan Army Blanket	180	180	180	500	500	500	*	*	*
Jordan Polymer	*	*	*	*	*	*	*	*	*
Clenkers, Ltd.	*	*	*	36	36	36	*	*	*
New Industrial Development	470	1,170	2,340	470	1,170	2,340	Unk	Unk	Unk
Subtotal	1,920	2,580	4,100	8,666	7,176	8,916	*	*	*
Awjan al Janubi									
Moralux Ind. Comm. Co.	*	*	*	4	5	7	*	*	*
Cream Tex	5	7	10	2	2	4	*	*	*
Subtotal	5	7	10	6	7	11	*	*	*
Awjan al Gharbi									
United Factories, Ltd	1,000	1,310	1,810	1	2	3	*	*	*
Imperial Underwear	18	24	33	6	7	10	*	*	*
Arab Breweries Co.	135	200	200	52	77	77	*	*	*
Jordan Brewery Co., Ltd	270	380	380	110	150	150	*	*	*
Eagle Distilleries	1,400	1,630	2,520	17	22	31	*	*	*
Zeidan Refrigeration Co.	4	5	7	2	2	3	*	*	*
Subtotal	2,827	3,749	4,950	188	260	274	*	*	*
Zarqa									
New Industrial Development	190	470	940	190	470	940	Unk	Unk	Unk
Subtotal	190	470	940	190	470	940	-	-	-
TOTAL (STUDY AREA)	6,520	8,694	12,399	696,044	695,138	697,740	-	-	-

* - Negligible

Unk - Unknown

TABLE L-4.2 (CONT'D.) INDUSTRIAL OPERATIONS SUMMARY AND ESTIMATED FLOW VARIABILITY

INDUSTRY	OPERATION			WASTEWATER FLOW VARIABILITY			
	HOURS DAILY	DAYS WEEK	TYPE OF OPERATION (BATCH/CONT.)	AVE.DAILY FLOW (M^3/DAY)	PEAK/AVE. FLOW FACTOR	MIN./AVE. FLOW FACTOR	MAX. DAILY FLOW (M^3/DAY)
Awjan esh Sharqi (Cont'd)							
Jordan Army Blanket	8	6	Semi-Cont.	1.0	10.0	0.0	-
Jordan Electric Power Co.	24	6	Sanitary Only	-	-	-	-
Arab Thinner Factory	8	6	Sanitary Only	0.8	-	-	-
Jopolymer	16	6	Batch	8.8	16.0	0.0	-
Clenkers Ltd	8	6	Batch	6.2	24.0	0.0	-
Int'l Leather Prod.	8	6	Sanitary Only	2.4	-	-	-
Jordan Fiberglass	8	6	Sanitary Only	0.3	-	-	-
Jordan Tiles Co.	8	6	Cont.	100.8	3.0	0.0	-
Ruseifa							
Yeast Industries Co.	24	6	Cont.	113.0	1.25	0.0	-
Jordan Phosphate Co.	24	6	Cont.	1680.0	1.3	0.8	-
Oriental Star Distillery	8	6	Batch/Cont.	29.4	2.7	0.0	-
Hussein Industrial City							
Detergent Factory	16	6	Batch/Cont.	39.0	8.0	0.0	-
Soap Factory	8	6	Batch/Cont.	104.0	3.6	0.0	-
Ice Cream Factory	8	6	Batch/Cont.	24.6	4.7	0.8	-
Cosmetic Factory	8-16	6	Batch	0.8	12.0	0.0	-
Paint Factory	8	6	Batch	3.0	24.0	0.0	-
Oriental Mineral Water	8	6	Cont.	93.0	3.0	0.0	-
Transjordan Mineral Research	8	6	Sanitary Only	0.2	-	-	-
Jordan Overall Ltd.	8	6	Semi-Cont.	17.0	17.0	0.35	-
Jordan Dairy Co.	[illegible]	[illegible]	[illegible]				

from the breweries should be sufficient to maintain the equalization effluent pH above 5.5 during the workweek. Equalization effluent pH may drop to an unacceptable value on Friday when the only industrial flows are from the Eagle Distillery alcohol plant (i.e. distillation shops), and compressor cooling water and boiler blowdown from the breweries. If this localized pretreatment option were implemented and pH values outside of acceptable limits were experienced, the Eagle Distillery would be required to install simple pH controls.

4.3.3 Capital Cost Estimate

Capital cost estimates of localized equalization facilities for Industrial Areas "A" and "B" are presented in Table I-4.7. Land costs for the localized pretreatment facility and permanent easements for pipeline right-of-way have been estimated at an assumed value of 10 JD/m^2.

4.3.4 Operating Cost Estimate

Operating cost estimates of localized equalization facilities for Industrial Areas "A" and "B" are presented in Table I-4.7. All estimates reflect first year operating expenses based on 1984 flows.

4.4 INDIVIDUAL TREATMENT/DISPOSAL

4.4.1 Description

Individual wastewater treatment and disposal was considered a potentially viable alternative for the following industries:

- Yeast Industries Co.
- Jordan Phosphate Co.
- Jordan Iron and Steel Co.
- Jordan Chemical Industries

A summary of treatment parameters and treatment processes investigated is presented in Table I-4.8. Each is discussed in detail below.

4.4.1a Yeast Industries Co.

Yeast Industries Co., Ltd. is located on the north bank of the Zarqa River in an agricultural area near the western perimeter of the Ruseifa Municipality. Due to its isolated location, the distance from the yeast plant to the first-stage trunk sewer for the proposed Zarqa-Ruseifa sewerage system is approximately 2.7 kilometers. Consequently, individua treatment with direct discharge of effluent was investigated.

Alternative processes evaluated for individual treatment of yeast plant wastewater are as follows:

TABLE I-4.7 CAPITAL COST ESTIMATES - LOCALIZED PRETREATMENT

INDUSTRIAL AREA	PRETREATMENT PROCESS OPTIONS	CONSTRUCTION COSTS (JD)	ENGINEERING* & CONTINGENCIES (JD)	EASEMENTS** (JD)	TOTAL CAPITAL (JD)
Ruseifa "A"	Equalization	9,920	3,470	41,400	54,790
Awjan al Gharbi "B"	Equalization	15,800	5,530	8,800	30,130

ANNUAL OPERATING COST ESTIMATES - LOCALIZED PRETREATMENT

INDUSTRIAL AREA	PRETREATMENT PROCESS OPTIONS	LABOR COST (JD/YR)	POWER COST (JD/YR)	HAULING COST (JD/YR)	CHEMICAL COST (JD/YR)	MECHANICAL REPAIR & REPLACEMENT (JD/YR)	TOTAL ESTIMATED ANNUAL OPERATING COST(JD/YR)
Ruseifa "A"	Equalization	1000	1260	0	0	310	2570
Awjan al Gharbi "B"	Equalization	1000	2050	0	0	440	3490

* Estimated at 35% construction cost

** Permanent easement for pipe right-of-way and land area for pretreatment facility

TABLE I-4.8 SUMMARY OF INDUSTRIES WITH POTENTIAL FOR INDEPENDENT TREATMENT AND TREATMENT PROCESS INVESTIGATED

INDUSTRY	TREATMENT PARAMETERS	TREATMENT PROCESSES INVESTIGATED
Yeast Industries Co.,Ltd.	BOD/COD/Suspended Solids	Anaerobic Digestion/ Land Application (Irrigation), Storage/Hauling, Activated Sludge
Jordan Iron & Steel Co.	Suspended Solids	Sedimentation
	Oil and Grease	Oil and Grease Skimme
Jordan Ceramic Ind. Co.	Suspended Solids	Sedimentation
Jordan Chemical Ind.	Mercury/Suspended Solids/Dissolved Solids	Sulfide Precipitation w/Mercury Recovery, Impoundment/Evaporati
Jordan Phosphate Co.,Ltd.	Suspended Solids	Sedimentation
Jordan Tiles Co.	Suspended Solids	Sedimentation

- anaerobic decomposition (contact process)
- land application of wastewater with and without anaerobic pretreatment
- storage with hauling to the proposed Zarqa - Ruseifa wastewater treatment plant

The anaerobic decomposition process was selected as the basic biological treatment process because of the similarities to the fermentation processes employed in the manufacture of yeast. The nutrient content of the fermentation waste are sufficient for anaerobic treatment processes but not aerobic treatment processes which require considerably more nutrients for cell synthesis. Sludge yield is considerably less than the activated sludge process and methane gas production is estimated to provide all heating requirements for the treatment process due to the high BOD concentration of the wastewater.

The anaerobic contact process is basically a conventional anaerobic digester with provision for solids separation and recirculation of seed organisms. A degasifier is usually needed to minimize floating solids in the separation step and a gas holder and aerated sludge storage tank will also be required. The anaerobic contact process is expected to remove 70-80 percent COD and 80-90 percent BOD. Based on an average influent COD of 4150 mg/l and BOD of 2690 mg/l, the average effluent quality achievable is estimated as follows:

BOD = 270 - 540 mg/l (30.2-60.5 kg/day)

COD = 830 -1245 mg/l (93-140 kg/day)

TSS = 30-50 mg/l (3.4 - 5.6 kg/day)

These estimated effluent BOD and COD concentrations from anaerobic treatment are still not considered acceptable for discharge to the Zarqa River, except possibly during the rainy season when river levels are high and dilution significant.

Land application of wastewater was evaluated as a treatment/disposal method for both raw and anaerobically-treated yeast plant wastewater. Within 0.5 km of the yeast plant along the banks of the Zarqa River there exists about 10 hectares of prime agricultural land for irrigation. Much of this land is already irrigated with combined Zarqa River water and yeast plant wastewater. If this land is to be employed for irrigation of raw yeast plant wastes, monitoring will be necessary to prevent raw waste from entering the river. Monitoring will be less critical if the wastewater is pretreated by anaerobic decomposition.

4.4.1d Jordan Distilled Chemical Company

The Jordan Distilled Chemical Company operates a mercury cell chlor-alkali manufacturing plant in Awjan esh Sharqi. Analytical results from wastewater samples collected as part of this study have indicated total mercury concentrations in the mercury cell wastewater and the brine muds to be 15.25 mg/l and 25 mg/l, respectively. These mercury concentrations are four orders of magnitude greater than drinking water standards established by the WHO, ASS, and USEPA, and are two orders of magnitude greater than the TL_{50}. The TL_{50} is defined on that concentration at which fifty percent of the test organising survive after 96 hours. Consequently, treatment of this wastewater is paramount.

As discussed in Section 4.2.1f, the recommended treatment process for process wastewaters from the chlor-alkali facility is sulfide precipitation of mercury cell wastewater with mercury recovery. Brine purification muds are presently settled with recycle of supernatant to the process The brine mud settling tank underflow could be pumped to impoundments with treated mercury cell wastewater for evaporation and permanent storage Due to the highly toxic nature of this waste, the impoundment would requir an impermeable lining to prevent the migration of contaminated leachate to groundwater.

4.4.2 Process Unit Sizing and Outline Specifications

4.4.2a Yeast Industries Co.

4.4.2a (i) Anaerobic Contact

In order to obtain 90 percent BOD removal, a solids retention time of about 10 days will be required at 35°C (Reference 15). Using the average BOD and COD concentrations presented in Appendix Table I-A.2.1 as 2690 mg/l and 4150 mg/l, respectively, at a design flow rate of 197 m^3/day and an assumed mixed liquor suspended solids of 5000 mg/l, the require digester volume is approximately 98 m^3. This translates to an average BOD loading of 4.6 $kg/m^3/day$ (289 $lb/1000\ ft^3/day$) and an average hydraulic detention time of 0.5 days. Methane gas production is estimated at approximately 233 m^3/day, which should be adequate to provide all heating requirements. Sludge storage is sized to provide a minimum of four days storage at design flow. This requires a storage volume of about 23 m^3 assuming a sludge yield of 0.15 times BOD removal and 1 percent sludge solids concentration. The sedimentation unit is sized for an overflow rate of 12 $m^3/m^2/day$ (300 gpd/ft^2) at design flow. This requires a circular clarifier approximately 4.6 meters in diameter.

4.4.2a (ii) Land Application

Land requirements, with and without anaerobic pretreatment, were determined by evaluating the minimum area requirements for flow, nitrogen, phosphorus, and BOD. Minimum area requirements without anaerobic pretreatment are outlined below:

Parameter	Average Annual Raw Load	Maximum Recommended Annual Application Rate	Minimu Area Require
Flow	34,000 (m^3)	31,700 (m^3/ha)	1.1
Nitrogen	1,750 (kg)	490 (kg/ha)	3.6
Phosphorus	50 (kg)	1[illegible] (kg/ha)	<0.1
BOD	91,400 (kg)	15,600 (kg/ha)	5.9

As illustrated, BOD is the controlling parameter requiring a mini of 5.9 hectares in 1983. Maximum recommended application rates are bas References 10 and 11. BOD application rates as high as 200 kg/ha/day ha been employed with industrial wastewaters, but 50 kg/ha/day was select for a conservative estimate. Minimum land area requirements for the future will parallel the wastewater flow projections presented in Tabl I-3.1, increasing to about 10.6 ha in the year 2000. Sufficient agric tural lands exist in both the adjacent Zarqa River Valley and on the s north of the yeast plant to satisfy the area requirement for land trea outlined above. The effect of anaerobic treatment on area requirement for land application of wastewater would be to reduce nitrogen, phosph and BOD loadings to the point where flow is the controlling factor. T land area requirements would be reduced from 5.9 hectares to 1.1 hecta in 1983. The economics of this alternative have been presented in Sec 4.4.3 and 4.4.4.

An aerated pumped storage tank sized for 1 day detention time at flow has also been included in the cost estimates.

4.42b Jordan Iron and Steel Co.

The earthen spray cooling pond has been sized for a hydraulic det tion time of 6 hours at the design flow of 1250 m^3/day. Assuming an average depth of 2 meters with 0.3 m freeboard, the pond and dike woul occupy approximately 490 m^2 with about 156 m^2 of water surface area. oil containment boom and oil skimmer capable of removing 50 kg/day of will also be required. The pond is probably best located on the weste slope of the property immediately adjacent to the rolling mill.

TABLE I-4.9 CAPITAL COST ESTIMATES - INDIVIDUAL TREATMENT AND DISPOSAL

INDUSTRY	TREATMENT/DISPOSAL PROCESS OPTIONS	CONSTRUCTION COST (JD)	ENGINEERING & CONTINGENCIES* (JD)	TOTAL ESTIMATED CAPITAL COST (JD)
Yeast Industries Co.	Anaerobic Decomposition	59,800	20,900	80,700
	Land Application			
	(effl. from anaerobic treat.)	13,800	4,830	18,630
	(raw wastewater)	15,400	5,390	20,790
Jordan Iron & Steel Co.	Earthen Spray/Settling Pond (w/oil skimmer and pumped recycle)	5,94[illegible]	2,080	8,020
Jordan Distilled Chemical Co.	pH Control (sulfide pptn.)	8,100	2,840	10,940
	Sedimentation (w/chem.addition and flocculation)	13,400	4,690	18,090
	Sulfide Control	3,800	1,330	5,130
	Permanent On-Site Impoundment/ Evaporation (mercury cell ww only)	130,000	45,500	175,500
	Permanent On-Site Brine Mud Impoundment	93,400	32,700	126,100
	Brine Mud Evaporation Pond	15,300	5,360	20,660
	Brine Mud Dewatering (beltfilter press)	34,500	12,100	46,600

* Estimated at 35 percent construction cost.

TABLE I-4.10 ANNUAL OPERATING COST ESTIMATES - INDIVIDUAL TREATMENT AND DISPOSAL

INDUSTRY	TREATMENT/DISPOSAL PROCESS OPTIONS	LABOR COST (JD/YR)	POWER COST (JD/YR)	SLUDGE HAULING COST (JD/YR)	CHEMICAL COST (JD/YR)	MECHANICAL REPAIR AND REPLACEMENT (JD/YR)	TOTAL ESTIMATED ANNUAL OPERATION COST (JD/YR)
Yeast Industries Co.	Anaerobic Decomp.	2,000	1,600	740	250	750	5,340
	Land Application						
	(effl.from anaerobic treatment)	100	2,000	0	0	710	2,810
	(raw wastewater)	100	2,700	0	0	760	3,560
Jordan Iron & Steel Co.	Earthen Spray/ Settling Pond (w/ oil skimmer and pumped recycle)	350	2,700	0	100	480	3,630
Jordan Distilled Chem.Co.	pH Control (sulfide (pptn.)	100	760	0	1,200	440	2,500
	Sedimentation (w/ chemical addition and flocculation)	100	160	0	40	50	350
	Sulfide Control	100	100	0	230	200	630
	Permanent On-Site Impoundment/Evap. (mercury cell ww only)	400	0	0	0	0	400
	Permanent On-Site Impoundment (brine purification mud only)	400	0	0	0	0	400
	Evaporation Pond w/Off-Site Disposal (brine purification mud only)	700	0	310	0	0	1,110
	Mechanical Dewatering w/Off-Site Disposal	200	70	620	420	1,380	2,690

INDUSTRIAL - MUNICIPAL TREATMENT (W/PRETREATMENT WHERE APPROPRIATE)

INDUSTRY	TREATMENT/DISPOSAL METHOD	PRESENT WORTH CAPITAL COST (1950 JD)	PRESENT WORTH OPERATING COST (1950 JD)	TOTAL PRESENT WORTH (1950 JD)
Yeast Industries Co.	Aerobic Contact w/Land Application of Effluent	120,000	39,300	159,300
	Land Application of Raw Wastewater	20,800	26,200	47,000
	Raw Wastewater Discharge to Proposed Zarqa-Ruseifa Sewerage System	113,400	25,900	139,300
Jordan Iron and Steel Co.	Earthen Spray/Settling Pond w/Oil Skimmer and Effluent Recycle	8,020	21,100	29,120
	Wastewater Discharge to Proposed Zarqa-Ruseifa Sewerage System	16,400	226,800	243,200
Jordan Distilled Chemical Co.	Sulfide Precipitation of Mercury Cell Wastewater and Impoundment/Evaporation of Effluent	209,700	26,400	236,100
	Pretreatment of Mercury Cell Wastewater by Sulfide Precipitation w/Effluent discharge to Proposed Zarqa-Ruseifa Sewerage System	34,200	32,900	67,100

TABLE I-5.1 SUMMARY OF RECOMMENDED TREATMENT/PRETREATMENT STRATEGY BY INDUSTRY

INDUSTRY OR INDUSTRIAL AREA	RECOMMENDED TREATMENT/PRETREATMENT STRATEGY
Yeast Industries Co., Ltd.	Individual treatment and disposal by land application of raw wastewater
Hussein Industrial City	Localized equalization w/combined industrial-municipal treatment
Jordan Phosphate Co.	Individual treatment by coagulation and sedimentation w/direct discharge
Oriental Mineral Water Factories	Equalization w/combined industrial-municipal treatment
Transjordan Minerals Research Co.	Sedimentation w/reuse. No discharge
Jordan Overall Co., Ltd.	Equalization w/combined industrial-municipal treatment
Jordan Dairy Co., Ltd	Equalization w/combined industrial-municipal treatment
Jordan Worsted Mills	Equalization and screening w/industrial-municipal treatment
Jordan Tanning Co.	Aerated equalization, chromium pretreatment by hydroxide precipitation (w/pH control, sedimentation, and oil and grease removal), w/combined industrial-municipal treatment. Pretreatment sludge to dewatering beds w/off-site disposal
Jordan Paper and Cardboard Co.	Equalization and sedimentation pretreatment w/combined industrial-municipal treatment
Jordan Iron and Steel Co.	Individual treatment by sedimentation and oil removal w/recycle to process. No discharge
Jordan Distilled Chemical Co.	Pretreatment of mercury cell wastewater by sulfide precipitation (pH control, sulfide control, sedimentation, mercury recovery) w/combined industrial-municipal treatment. Individual treatment and disposal of brine purification mud by evaporation ponds w/off-site disposal of residual
Jordan Army Blanket Factory	Equalization and screening pretreatment w/combined industrial-municipal treatment
Industrial Area "B" (Arab Brewery, Jordan Brewery, Eagle Distilleries, Zeidan Refrigeration)	Localized pretreatment by aerated equalization w/combined industrial-municipal treatment
Jordan Ceramic Industries Co.	Individual treatment by sedimentation and reuse in process. No discharge
Jordan Tiles Co.	Individual treatment by sedimentation and reuse in process. No discharge

[illegible] FLOWS AND WASTE LOADS TO COMBINED INDUSTRIAL-MUNICIPAL TREATMENT

INDUSTRY	AVERAGE FLOW (M^3/DAY)			POLLUTANT LOAD (KG/DAY) BOD_5			TSS		
	1984	1990	2000	1984	1990	2000	1984	1990	2000
Ruseifa									
Yeast Industries Co.	0	0	0	0	0	0	0	0	0
Jordan Phosphate Co.	+	+	+	+	+	+	+	+	+
Oriental Star Distillery	44	32	39	10	10	12	10	10	12
Hussein Industrial City									
Detergent Factory	78	78	78	3	4	5	3	4	5
Soap Factory	1515	99	138	100	130	180	20	34	65
Ice Cream Factory	25	8	11	41	53	74	16	21	29
Cosmetics Factory	1	1	2	*	*	*	*	*	*
Paint Factory	3	4	6	*	*	*	5	6	8
Oriental Mineral Water Fact.	200	200	200	550	550	550	270	270	270
Transjordan Mineral Research Co.	+	+	+	+	+	+	+	+	+
Jordan Overall Co	7	1	1	*	*	*	*	*	*
Jordan Dairy Co.	115	150	210	520	680	940	210	280	380
Jordan Worsted Mills	93	120	170	54	71	98	360	470	650
Sultan Plastics Co.	+	+	+	+	+	+	+	+	+
Subtotal	2081	693	854	1278	1498	1859	894	1095	1491

* - Negligible

** - Mercury cell wastewater only

\+ - Sanitary wastewater only

REFERENCES

1. "Development Document for Effluent Limitations Guidelines and New Source Performance Standards for the Unbleached Kraft and Semichemical Pulp Segment of the Pulp, Paper, and Paperboard Mills Point Source Category", U.S. Environmental Protection Agency, EPA-440/1-74-025-a, May 1974.

2. "Summary Report on the Beverage Industry", U.S. Environmental Protection Agency, Office of Water Programs, Division of Applied Technology, January 1972.

3. "Development Document for Effluent Limitations Guidelines and New Source Performance Standards for the Leather Tanning and Finishing Point Source Category", U.S. Environmental Protection Agency, EPA-440/1-74-016-a,

4. Nemerow, N.L., Liquid Waste of Industry - Theory Practice & Treatment, Addison-Wesley Publishing Co., 1971.

5. Shreve, R.N. and Brink, L.A., Chemical Process Industries, Fourth Ed., McGraw - Hill Book Co., 1977.

6. "Effluent Guidelines and Standards; Electroplating Point Source Category; Pretreatment Standards for Existing Sources Federal Register, Vol. 44, No.175, Friday, Sept. 7, 1979.

7. Patterson, J.W., Wastewater Treatment Technology, Ann Arbor Science Publishers, Inc., 1977.

8. I. Kruger A/S, "Amman Sewage Treatment Plant", June 1977.

9. VBB/Fawzi and Assoc., "Water Resources Study for Amman Water Supply", November 1976.

10. "Guidelines for Sewage Sludge Utilization on Agricultural La Ad Hoc Joint Committee of Ontario Ministry of Agriculture and Food - Ontario Ministry of the Environment, April 1978.

11. "Process Design Manual for Land Treatment of Municipal Wastewater", U.S. Environmental Protection Agency, Environmental Research Information Center Technology Transfer, EPA 625/1-77-008, October 1977.

12. Equipment Manufacturer Literature, "Parkson Lamella TM Gravity Settler/Thickener Bulletin LT-101", Parkson Corp., 1977.

13. Moorman, F., "The Soils of East Jordan", A Report to the Government of Jordan by the Food and Agriculture Organization of the United Nations, Rome, 1959.

14. Lund, H.F. ed., Industrial Pollution Control Handbook, McGraw - Hill Book Co., 1971.

15. Eckenfelder, W.W. Jr., Industrial Water Pollution Control, McGraw - Hill Book Co., 1966.

TABLE I-A.1.1

SUMMARY OF INDUSTRIAL WASTE SURVEY

Industry: Yeast Industries Co. Ltd. Location: Ruseif

Principal Activities: Yeast production

No. Employees: 22 Operation: 24 Hr./day 6

Raw Materials (tonne/yr.): Beet molasses, phosphates, $(NH_4)\ SO_4$, $Mg\ SO_4$ (nutrients), $H_2\ SO_4$ (PH Control)

Products (tonne/yr.): Fresh and dry bakers yeast.

Water Source	Average Consumpti
Municipal (Ruseifa)	0.02 m^3/d
Private Well	113 m^3/d

Industrial Processes	Water Use	Wastewater
floor & tank wash +	m^3/day	
vacuum filtrate (spent nutrient)	109 m^3/day	109
cooling water	1 m^3/day	1
boiler blowdown	3 m^3/day	3

Wastewater Flow	Process	Cooling	Sanitary	St
Ave. (m^3/day)	112	1	0.02	
Max. (m^3/day)				

Wastewater Treatment /Disposal: Sanitary wastewater t process wastewater and boiler blowdown to Wadi Zarqa t separate outfalls.

Comments: Boiler blowdown @ 40 l/min (intermittent) appears clean and hot. Process water highly odorous a turbid. Discoloration of river water after outfall w/ solids deposits near outfall.

TABLE I-A.2.1 INDUSTRIAL WASTEWATER CHARACTERISTICS

INDUSTRY	SAMPLING DATE	CONCENTRATION (mg/l)															
		pH	TS	TSS	BOD_5	COD	Cd	Cr	Pb	Hg	Cu	Zn	Fe	P_2O_5	NO_3	NH_3	Org. N
YEAST INDUSTRIES CO. LTD.	17-3-79	7.8	4052	1923	4600	5480	-	-	-	-	-	-	-	-	-	-	-
	24-6-79	6.0	1846	428	1775	3720	0	0	0	0	0.1	0.12	1.08	7	15	4.0	75.7
	16-9-79	7.8	837	380	1690	3540	0.01	0.01	0.01	0.01	0.01	0.01	0.2	0.1	20	0.32	24.1
	Mean	7.2	2240	910	2690	4150	0.01	0.01	0.01	0.01	0.05	0.06	0.64	3.5	17.5	2.2	49.9
IMPERIAL UNDER-WEAR	9-6-79	4.0	2621	282	675	2353	-	-	-	-	0.01	0.04	-	-	20	2.0	23.4
	14-7-79	-	-	-	533	896	-	-	-	-	-	-	0.03	7.0	22	0.72	4.8
	15-7-79	3.9	2279	98	562	896	-	-	-	-	-	-	.09	20.0	0*	0*	25.5
	Mean	3.95	2450	190	590	1380	-	-	-	-	0.01	0.04	0.06	13.5	21	1.4	17.9
JORDAN WORSTED MILLS	2-6-79	5.3	16449	15327	675	2353	-	-	-	-	0.01	0.04	-	-	20	2.0	23.48
	15-7-79	7.8	1178	31	562	752	-	-	-	-	-	-	0.03	trace	2	10	5.7
	Mean	6.55	8810	7680	618	1550	-	-	-	-	0.01	0.04	0.03	trace	11	6.0	14.5
CERAMCO	16-6-79	7.9	973	36	110	112	-	-	-	-	-	0.16	-	-	10	10.7	[illegible]
	29-7-79	7.9	995	372	152	140	-	-	-	-	-	-	-	trace	60	0.2	[illegible]
	Mean	7.9	984	204	131	126	-	-	-	-	-	0.16	-	trace	35	0.45	[illegible]
JORDAN ARMY BLANKET	21-7-79	8.9	19706	1712	833	2432	-	0.09	-	-	0.06	0.19	0.1	trace	2	240	[illegible]

* Excluded from mean calculation.

Source: Amman Sewage Treatment Plant files. Analyses by the Royal Scientific Society.

REPORT NO. 3114-95-2b-30
UNITED STATES AGENCY
FOR INTERNATIONAL DEVELOPMENT
CONTRACT NO. 278-0288-00-C-4026-00
Amman Chamber of Industry, Jordan
Ministry of Water and Irrigation, Jordan

BACKGROUND REPORT

YEAST INDUSTRY
YEAST INDUSTRIES COMPANY LTD., JORDAN

WATER QUALITY IMPROVEMENT
AND CONSERVATION PROJECT

Industrial Wastewater Discharge
Prevention Program

Development Alternatives, Inc., Washington D.C. U.S.A.
Harza Consulting Engineers and Scientists, Chicago, U.S.A.
Royal Scientific Society, Amman, Jordan

March 1995

YEAST PRODUCTION INDUSTRY
BACKGROUND MATERIALS

INDUSTRIAL WASTEWATER DISCHARGE POLLUTION PROGRAM
WATER QUALITY IMPROVEMENT AND CONSERVATION PROJECT

Amman, Jordan

TABLE OF CONTENTS

1.0 INTRODUCTION 1
1.1 Background 1
1.2 Objectives 1

2.0 INDUSTRIAL OVERVIEW 3
2.1 Typical Yeast Production Processes 4
2.1.1 Raw Material Preparation 4
2.1.2 Fermentation 5
2.1.2.1 Flask Stage 5
2.1.2.2 Pure Culture Stage 5
2.1.2.3 Main Fermentation Stage 6
2.1.3 Product Recovery 7
2.1.4 Product Finishing and Packaging 8
2.1.4.1 Compressed Yeast Finishing and Packaging 8
2.1.4.2 Dry Yeast Finishing and Packaging 8
2.1.5 Ancillary Operations 9
2.1.5.1 Equipment Cleaning and Sterilization 9
2.1.5.2 Steam Production 9
2.1.5.3 Cooling System 9
2.1.5.4 Facility Housekeeping 10
2.1.5.5 Wastewater Treatment 10
2.2 Water Usage 11
2.2.1 Process Water 11
2.2.2 Cooling Water 11
2.2.3 Boiler Feed Water 12
2.2.4 Housekeeping and Domestic Water 12
2.3 Wastes and Emissions 12
2.3.1 Wastewater 12
2.3.2 Air Emissions 13
2.3.2.1 The Fermentors 13
2.3.2.2 The Steam Plant Boiler 14
2.3.2.3 The Fluidized Bed Dryer 14
2.3.3 Solid Waste 14

3.0 THE YEAST INDUSTRIES COMPANY, LTD. 15
3.1 Process Description 15
3.2 Raw Materials and Water Supply 16
3.3 Wastewater Discharges 17

4.0 AREAS FOR POTENTIAL IMPROVEMENT 18
4.1 Water Conservation 18
4.1.1 Wastewater Treatment Plant Recycle 18
4.1.2 Process Water Recycle 19
4.1.3 Steam Recycle 19
4.1.4 General Process and Management Improvements 20
4.2 Pollution Prevention/Waste Minimization 20
4.2.1 Wastewater PP/WM 20
4.2.2 Air Emission PP/WM 22
4.2.2.1 Fermentor VOC Emissions 23
4.2.2.2 Boiler Emissions 24
4.2.3 Solid Waste PP/WM 25

5.0 REFERENCES 26

FIGURES

Figure 1: Block Flow Diagram of a Typical Baker's Yeast Production Process.

Figure 2: Process Flow Diagram of Production Processes; Yeast Industries Co., Ltd.

Figure 3: Process Water Recycle Diagram.

1.0 INTRODUCTION

This document presents the material collected as background information for a pollution prevention, waste minimization, and water conservation audit of Jordan's Yeast Industries Company, Limited.

1.1 Background

Development Alternatives, Inc. (DAI) under a contract with the United States Agency for International Development (USAID) is performing an Industrial Wastewater Discharge Prevention Program (IWDPP) in Amman, Jordan. The IWDPP is one of the four components of the Water Quality Improvement and Conservation project, funded by the USAID. The IWDPP is being performed by DAI with full coordination between the Ministry of Water and Irrigation and the Amman Chamber of Industry. The IWDPP includes conducting audits, performing feasibility studies, and designing for demonstration activities at selected industrial facilities.

Pollution Prevention and Waste Minimization (PP/WM) techniques are defined as any techniques to prevent or reduce waste generation by source reduction or recycling activities. These activities must reduce either the volumes or the concentrations of pollutants generated prior to the treatment, storage, or disposal of the waste.

Based on a ranking methodology, the PP/WM Committee has selected ten industries with potential needs for PP/WM audits. One of these industries is the "yeast production industry." Harza Consulting Engineers and Scientists (Harza), Chicago/USA, has been retained by DAI to lead the PP/WM audit for this industry.

The purpose of these audits is to assist the industries in the Amman-Zarqa Basin to assess PP/WM and suggest alternative solutions to achieve desired levels of pollution prevention, water conservation, and wastewater treatment under the following subtasks:

- Subtask 1.1 - Audit Coordination;
- Subtask 1.2 - PP/WM Background Materials Preparation;
- Subtask 1.3 - Pre-Investigation Meeting;
- Subtask 1.4 - Audit;
- Subtask 1.5 - Post-Inspection Meeting; and
- Subtask 1.6 - Audit Evaluation Report.

1.2 Objectives

In this document, background information has been assembled by performing a comprehensive literature review. The purpose of the literature review was to identify the available technologies being practiced for PP/WM and water conservation for the yeast production industry. To best address the industry practices in Jordan, the specific focus of the review was on the baker's yeast segment of the industry.

The literature review included published literature and conversations with personnel within the United States (US) yeast industry. The literature consisted of PP/WM related books and articles, yeast industry journals and conference proceedings, and US Environmental Protection Agency (USEPA) documents and communications.

Section 2.0 of this report provides an overview of the baker's yeast production industry, while Section 3.0 details the processes used at Jordan's Yeast Industries Company, Limited. Section 4.0 describes areas for potential improvement in regards to PP/WM and water conservation. Finally, Section 5.0 lists the primary references consulted during the literature review: copies of the appropriate sections of these references are provided under a separate cover.

2.0 INDUSTRIAL OVERVIEW

Yeast, like mold, is a fungus. As a branch of non-green plants, fungi feed upon organic materials. If they are supplied with the necessary organics together with other needed nutrients, then they will not only grow and multiply, but also will change the food into other chemical substances. Of the many species of yeast, the most commercially significant are the related strains of *Saccharomyces cerevisiae*. As brewer's yeast these organisms have been utilized to ferment the sugars of various grains to produce alcoholic beverages, and as baker's yeast they have been used to expand, or raise, dough. The focus of this report is on the production of baker's yeast.

There are two types of baker's yeast: compressed yeast and dry yeast. The primary difference between these two yeasts is the level of drying or dewatering which takes place before the product is packaged for distribution. Eighty-five percent of the 223,500 megagrams of baker's yeast produced in the US in 1989 was compressed yeast; the remainder was dry yeast.

> **Compressed Yeast.** Compressed yeast is marketed in the form of moist cakes with a moisture content of about 70%. Compressed yeast is a perishable commodity and, if properly refrigerated or frozen, has a useful life of several weeks.
>
> **Dry Yeast.** Dry yeast is marketed in the form of packaged granules with a moisture content of about 7.5%. Although the useful life of dry yeast is much greater than that of compressed yeast (up to two years without refrigeration) its activity, on a dry weight basis, is only approximately 65% of compressed yeast: as such, much more must be used to achieve the same effect.
>
> There are two types of dry yeast, active and instant; the main difference between the two is that active dry yeast must be rehydrated in warm water prior to usage.

The manufacture of baker's yeast has been practiced for centuries. Its earliest roots lie in the use of leaven to make bread rise: the leaven (or "starter") was typically a portion of the previously fermented batch of dough which, when mixed with fresh dough, transferred its biological activity. The same concept is still used today to make sourdough bread. Yeast has also historically but inefficiently been produced as a by-product of the brewing industry, called barm.

In the past century scientists have gained a detailed understanding of yeast and the fermentation process used to make it grow and multiply. Several innovative steps have moved baker's yeast production to a more commercially efficient scale. For example, brewing industry by-products have been replaced with molasses as the yeast's principal substrate. Also, fermentation process tanks have been equipped with air supply and incremental feed systems to reduce the formation of undesirable alcohols and to increase the yeast growth rate.

The balance of this section describes the typical production processes, water usages, and wastes and emissions associated with the production of baker's yeast. A generalized block flow diagram of the production processes is given as Figure 1.

2.1 Typical Yeast Production Processes

The commercial production of yeast relies on the fermentation of an initial yeast culture (or "seed") in a carbohydrate and nutrient rich substrate. When the desired degree of culture seed multiplication is achieved, the yeast is "ripened" with additional carbohydrates in a series of fermentation vessels. The fermentation process takes place under carefully controlled conditions, especially in regards to pH, temperature, and aeration. Finally, the yeast is harvested, dewatered as appropriate, cut, and packaged.

The yeast production process is described below in accordance with its five major steps: raw material preparation, fermentation, product recovery, product finishing and packaging, and ancillary operations. As noted previously, the production of compressed yeast and dry yeast are essentially the same with the exception of final product dewatering and packaging.

2.1.1 Raw Material Preparation

The primary substrate upon which the yeast culture feeds during the production of yeast is molasses: this carbohydrate provides the energy necessary to sustain the fermentation process, as well as several essential nutrients and vitamins. Depending on a variety of factors, such as cost and availability, beet molasses, refiner's cane molasses, blackstrap molasses, or a blend of these, is used. Because each of the types of molasses has a slightly different composition, the selection of molasses determines which nutrients will need to be supplemented in the substrate to maximize yeast production.

The nutrients required to support yeast production are nitrogen, phosphate, magnesium, potassium, and calcium. These nutrients are usually prepared in batch solutions and introduced into the fermentation reactors as necessary. Nitrogen is normally supplied through the addition of ammonium salts, aqueous ammonia, or anhydrous ammonia. Phosphates and magnesium are added in the form of phosphoric acid or phosphate and magnesium salts. Potassium and calcium are typically present in sufficient amounts in the molasses substrate.

Trace amounts of vitamins, such as biotin (vitamin H), and other minerals, such as iron, zinc, and copper, may also be added as necessary to maximize the fermentation process.

Prior to use, the raw molasses is clarified to remove any sludge and decolorized. The pH of the molasses is adjusted during these processes; too high a pH promotes bacterial growth. (The pH is also carefully maintained throughout the fermentation process, which is described in the following section).

After this initial molasses preparation, the molasses is sterilized by heating it to 38 to 43 degrees centigrade (°C) for about an hour. The heating is typically achieved with high-pressure steam. During sterilization the molasses's pH is again adjusted; it is held between 6.0 and 8.0 to prevent caramelization, or burning, of the sugars. After sterilization, the prepared molasses is diluted with water and stored in tanks to await its mixing with the yeast culture in the fermentation vessels.

2.1.2 Fermentation

Yeast is grown in a series of fermentation vessels, or fermentors. The process begins by placing a small, "starter," portion of yeast culture into the molasses substrate and allowing it to grow. Yeast is propagated when the yeast mixture is placed into the next fermentation vessel, which is equipped for batch or incremental feeding of the molasses substrate. The process continues in stages until the yeast mixture reaches the final fermentor. Each of the fermentation stages, the flask stage, the pure culture stage, and the main fermentation stage, is described in greater detail below.

2.1.2.1 Flask Stage

The first fermentation stage typically takes place in the laboratory when a portion of yeast seed is mixed with the molasses substrate in an Erlenmeyer flask. The total contents of the flask are typically less than five liters (L) and the yeast is allowed to grow in the flask for two to four days.

The seed is pure culture. The pure culture is an active strain of the yeast microorganism which has typically been cultivated in a laboratory. This active strain, after cultivation, may be preserved indefinitely by freeze drying until its use is required.

2.1.2.2 Pure Culture Stage

The pure culture fermentation stage usually consists of two fermentations. The capacities of the vessels used in this stage typically range from 1,100 to 26,500 L. The yeast yields in the two fermentors are typically approximately 30 and 600 kilograms (kg), respectively.

These fermentations are batch fermentations, where the yeast is allowed to grow in the molasses substrate for 13 to 24 hours. In batch fermentations all of the required substrate is present in the fermentor when the yeast is added. This method is not as efficient as the incrementally-fed method, which is used during main fermentation and is described in the following section.

Briefly, batch fermentors are not as efficient as incrementally-fed fermentors because they do not control the ratio of fermentable sugars to yeast throughout the

fermentation process. However, since the overall economy of yeast production depends on the yield from the final, main, fermentation stage, it is not important to have incrementally-fed pure culture fermentors.

The pure culture stage is basically a continuation of the flask stage, except that the pure culture fermentations have provisions for sterile aeration and aseptic transfer to the next stage. Sterility is critical; if a sterile environment is not provided, contaminating microorganisms can easily outgrow the yeast.

2.1.2.3 Main Fermentation Stage

The majority of the yeast yield grows in the final fermentation stages. These fermentations typically take place in two to four vessels, resulting in five to seven fermentors in the total fermentation process, including the flask stage. The processes unique to the two- and four-vessel main fermentations are described below, after the following discussion of the parameters common to both.

The fermentors used in the main fermentation stage vary greatly in size: their volumes range from 37,900 L to over 283,900 L, with the larger vessels corresponding to the later stages. The vessels have diameters greater than 7 meters (m) and heights up to 14 m.

The vessels are usually made of stainless steel and, unlike the batch reactors used in the previous stage, some vessels are equipped with an incremental feed system to deliver the molasses substrate to the yeast at an optimal rate. The incremental feed system is a series of pipes that distributes the molasses over the entire surface of the fermentor liquid. The system is regulated to deliver the molasses at time intervals corresponding to the yeast's growth curve, thus controlling the ratio of fermentable sugars to yeast. By maintaining a low excess-sugar concentration the yeast's respiratory activity is maximized, resulting in a greatly increased final yield. Nutrient solutions of minerals and vitamins are pumped into the fermentors from small tanks, but the rate of feed is not as critical as that of the molasses.

The fermentors are typically operated at a temperature of 30°C. Higher temperatures negatively influence the keeping and baking qualities of the yeast. As such, the fermentors must be equipped with heat exchangers to remove the heat generated from the production process and to cool them. The type of heat exchanger system used is dependent on the size of the vessel.

The size of the fermentor also determines the type of aeration system used: large volumes of air must be supplied to the vessels during this stage of fermentation to maintain the dissolved oxygen content in the substrate at an optimally high level. Yeast yields are much greater under aerobic conditions than anaerobic conditions; under anaerobic conditions the fermentable sugars in the molasses are

consumed by the production of ethanol and carbon dioxide rather than by yeast. Horizontal perforated pipes, compressed air and mechanical agitation, and a self-priming aerator are among the types of aeration systems used.

Four-Vessel Main Fermentation. When using four main fermentors, the pure yeast culture stage is followed by an intermediate stage of yeast growth without incremental feeding. The entire contents of that batch fermentor are then transferred to an incremental feeding tank having good aeration. This second main fermentor is often called the stock fermentor since, after fermentation is completed, the yeast mixture is centrifuged, producing a stock of yeast for the next fermentor.

The third and fourth main fermentors are equally large. In the third main fermentor aeration is vigorous and molasses and other nutrients are fed incrementally. The fermentor liquor from this vessel is typically divided into several parts for starting the fourth and final, or trade, fermentation. In some cases, the yeast is instead centrifuged and stored for several days before being used in the trade fermentation. The trade fermentor has the highest degree of aeration, and molasses and other nutrients are again fed incrementally.

Each of the four main fermentation stages lasts approximately 13 hours. The amount of yeast growth increases from approximately 120 kg in the first fermentor to approximately 15,000 to 100,000 kg in the fourth fermentor.

Two-Vessel Main Fermentation. When using two main fermentors, the only fermentations are the stock and trade fermentations; these fermentations correspond to the second and fourth main fermentations in the four-vessel process.

2.1.3 Product Recovery

When the optimal quantity of yeast has been grown, the fermentation stage of the production process ends and the product recovery steps begin. The first step is to recover the yeast cells from the spent substrate. This is accomplished by passing the final fermentor liquor, at about 3.5 to 4.5% solids, through a series of centrifugal separators. The desired solids content in the recovered material is between 18 and 21%, which can usually be achieved with two or three passes through the separators. The yeast is washed with water between each pass through the separators.

At this point, the yeast is referred to as "yeast cream." Yeast cream can be stored for several weeks at a temperature slightly above freezing. After storage, the yeast cream can be used to seed a fermentor or can be finished into a final product. Often, if used to seed a fermentor, the yeast cream is referred to as "mother liquor."

2.1.4 Product Finishing and Packaging

The final finishing and packaging steps are different depending on which product, compressed yeast or dry yeast, is desired. The finishing and packaging steps for each product are described below.

2.1.4.1 Compressed Yeast Finishing and Packaging

As stated previously, compressed yeast product has a moisture content of approximately 70%, which is equivalent to a solids content of approximately 30%. However, when the yeast is recovered from the fermentation stage as yeast cream, it has a solids content of only approximately 20%. The necessary increase in the yeast's solids content is achieved through filtration.

Filter presses or rotary vacuum filters are used to dewater the yeast cream. Filter presses usually consist of cotton duck filter cloth in 58 to 115 centimeter frames. Pressures between 860 to 1,030 kiloPascals are applied to the presses to achieve yeast yields between 27 and 32% solids.

Rotary vacuum filters dewater the product by applying a vacuum to the inside of a filter drum coated in yeast cream; water is drawn out of the yeast and into the drum. The yeast is applied to the filters' rotary drums by rolling the drums in a trough of yeast or by spraying the yeast directly onto the drums. The filters are usually coated with potato starch and salt to aid in drying the yeast. The filter drums rotate at a rate of 15 to 22 revolutions per minute; as the drums rotate, blades at the bottom of the drums remove the yeast. The yeast yields from rotary vacuum filters are approximately 33% solids.

The resultant filter cakes are blended in mixers with small volumes of water, emulsifier, and cutting oil. The emulsifier is added to improve the appearance of the yeast and the oil, typically soybean oil or cottonseed oil, is added to help extrude the yeast product. The mixed cake is extruded through nozzles to form continuous ribbons of yeast, which are then cut into segments of yeast cake. The cakes are wrapped in wax paper and stored for shipment at approximately 8°C.

2.1.4.2 Dry Yeast Finishing and Packaging

Dry yeast is filtered and extruded in the same manner as compressed yeast. However, the emulsifiers and oils mixed in with the yeast prior to extrusion are different than those used for compressed yeast; they are added to texturize the yeast as well as improve appearance and extrusion.

After the yeast is extruded into ribbons and cut, it is dried in either a batch or continuous drying system to approximately 93% solids content; the system is

typically a fluidized drying bed. The drying time ranges between one-half hour and four hours. Following drying, the yeast is vacuum-packed or packed under nitrogen gas before heated sealing.

2.1.5 Ancillary Operations

To fully support the commercial production of yeast via fermentation, a number of ancillary operations are necessary. These operations include equipment cleaning and sterilization, steam production, equipment cooling, facility housekeeping, and wastewater treatment. Some of these operations were noted previously in this report, and each is described more fully below.

2.1.5.1 Equipment Cleaning and Sterilization

Throughout the production of yeast, sterility is an absolute necessity: if a foreign culture is present inside a reaction vessel, it is likely that its propagation will rapidly overtake the yeast and spoil the batch. Sterility is also critical given that yeast is a food product and any foreign cultures present in the final product may be consumed by human beings.

To assist in assuring sterility, all transfer lines and reaction vessels are thoroughly cleaned and steam-sterilized as necessary. Additionally, the raw materials which make up the fermentation substrate, such as the molasses, are sterilized prior to their introduction into the process.

2.1.5.2 Steam Production

Steam is primarily required in a yeast production facility for equipment and raw material sterilization. The steam is typically produced using a boiler which may be fired by a number of sources, including oil, coal, or natural gas.

2.1.5.3 Cooling System

The fermentation process generates heat which must be controlled to maximize the yeast yield. The typical method of controlling the fermentors' heat is to transfer it to water via heat exchangers.

The water used as the cooling medium can pass through the cooling system in one of two ways: 1) it can be passed through the heat exchangers once and then be discharged as hot water; or, 2) it can be passed through the heat exchangers, then through cooling towers in which the heat is lost to the atmosphere, and then be either discharged as relatively cool water or recycled back to the exchangers.

2.1.5.4 Facility Housekeeping

Facility housekeeping procedures are routine janitorial services, and include floor and equipment washings. The wastewater generated from these wash-downs will contain a high organic content due to the residual yeast materials.

In addition to the chemicals used at a yeast facility during the various stages of the production process, chemicals are also used at the facility for cleaning purposes. These chemicals include sulfuric acid, caustic soda, and ammonia. Like the residual yeast product chemicals, many cleaning chemicals will ultimately be discharged as wastewater.

2.1.5.5 Wastewater Treatment

The highest strength facility wastewaters are typically those discharged from the molasses and yeast centrifuge and filter systems. Medium and low strength wastewaters include floor and equipment cleaning waters, fermentor cooling system waters, domestic wastewaters, and storm water.

The wastewaters are typically treated prior to discharge. The primary objective of wastewater treatment is to remove or modify those contaminants detrimental to human health or the environment. Land disposal, evaporative ponds, and/or deep-well injection are occasional discharge options, but usually the only practical outlets for the disposal of treated (or untreated) wastewater are lakes, oceans, or other water bodies. To protect water resources, the discharge of pollutants into them must be controlled. The facility's options for removing pollutants are to send the wastewater off-site to a public wastewater treatment plant or to treat it on-site.

A typical wastewater treatment plant utilizes physical, chemical, and biological treatment methods to remove the suspended, colloidal, and dissolved contaminants present in the water. In general, the contaminants are removed in order of increasing difficulty.

The operations of a typical wastewater treatment plant proceed as follows, with exceptions specific to a yeast facility's treatment plant noted: First, rags, sticks, and miscellaneous large objects are removed from the wastewater by retention on coarse screens. Then grit is removed in grit tanks. At this point, most of the small solids remain in suspension. These first two steps would not be required at a yeast facility's treatment plant, however, since the largest particles in the facility's effluent would be suspended solids.

The settleable fraction of the suspended solids can be removed and concentrated in gravity settling tanks. The settling tank's concentrated solids, called raw

sludge, are pumped to an anaerobic sludge digester to be reduced in volume through consumption by microorganisms; the tank's wastewater effluent flows from this "primary treatment" to "secondary treatment."

Secondary wastewater treatment typically consists of an aerobic biological treatment unit. In this unit, microorganisms aerobically digest the dissolved and colloidal matter in the wastewater; the organic matter is converted to carbon dioxide and water in the process. Less frequently, anaerobic biological treatment units, rather than aerobic units, are used. (As stated above, anaerobic digestion units are commonly used to reduce primary treatment sludge volume; they are not, however, as commonly used to treat the wastewater.) Carbon dioxide and methane are the principal products of anaerobic digestion.

Following bioreaction, the microorganisms are settled out of the bioreactor effluent in a settling tank. Part of the concentrated biological sludge is returned to reseed the bioreactor unit, but most is thickened and sent to an anaerobic sludge digester. The last stage in wastewater treatment prior to discharge is typically chemical disinfection.

2.2 Water Usage

A typical yeast production facility has the following water needs: process water, cooling water, boiler feed water, and water for housekeeping and other domestic uses. Most of these water requirements have already been mentioned in previous sections of this report, but each is briefly described below.

2.2.1 Process Water

Process water requirements include dilution water to prepare the molasses substrate, rinse water for product recovery rinses, and mixing water for product extrusion.

2.2.2 Cooling Water

Water is typically used as the cooling medium in the heat exchangers used to cool the fermentors. In a cooling system with no recycle, or a "once-through" system, a full supply of fresh water is constantly required to pass through the heat exchangers. In a "closed-loop" system with recycle, however, only a smaller volume of fresh "make-up" water is required periodically to replace the water lost from the system.

Water is lost from the closed-loop system by two means: evaporation and "blowdown." Evaporation occurs in the cooling towers. Blowdown is a small volume water that is periodically purged from the system and replaced with fresh water to help maintain the desired water quality. In addition, the cooling water often must have chemical additives to prevent scaling and corrosion of the system's metal components.

2.2.3 Boiler Feed Water

Boiler feed water is the water heated in the boiler to produce steam for equipment and raw material sterilization. Steam is produced by feeding the water through tubes arranged along the walls of the boiler; the water is vaporized into steam by the heat generated in the boiler.

If, after use, the condensed steam can be captured, then it can be recycled. However, this water must be of high purity and/or have chemical additives to prevent scaling and corrosion of metal components. A small volume of boiler blowdown is periodically purged from the recycle system and replaced with fresh water to further minimize scaling and chemical concentration.

2.2.4 Housekeeping and Domestic Water

Housekeeping and domestic water is required for routine wash-down of facility equipment and floors, general janitorial cleaning, and sanitary and personal use.

2.3 Wastes and Emissions

The most significant waste generated at a typical yeast production facility is wastewater: a major facility operation is dewatering the product. A great amount of washwater is also generated as a result of sterility concerns. Air emissions and solid wastes, though not as significant in volume as wastewaters, are also discharged from the facility. Each facility waste is briefly described below; those wastes that are generated during the production process are also listed on Figure 1.

2.3.1 Wastewater

A great and regular volume of wastewater is generated from production process operations. The process wastewaters are given on Figure 1:

- Effluent from molasses clarification;
- Spent substrate and rinse water from product recovery; and
- Discharge from the filters during product dewatering.

These wastewaters are highly-organic since they are derived from processing molasses substrate and yeast, thus they will carry substrate and yeast residue. The wastewater has been reported as having a chemical oxygen demand (COD) of 10,000 to 30,000 milligrams per liter (mg/L) and pH values in the range of 5.0 to 7.4. Typical BOD values have not been identified.

Other sources of facility wastewater include:

- Steam plant boiler blowdown;
- Effluent from air emission control devices employing water, if any (these are noted in the following section);
- Floor and equipment wash-down water;
- Janitorial and domestic wastewaters; and
- Storm water runoff from the facility grounds.

Of these lower strength effluents, only the floor and equipment wash-down water would be expected to carry significant substrate or yeast residue. These wastewaters typically have an average COD of approximately 1,700 mg/L.

Because the higher strength process wastewaters are discharged more frequently and in greater volume than the lower strength wastewaters, the combined effluent is usually more characteristic of a high-strength wastewater.

Wastewaters are typically sent to a treatment plant on- or off-site.

2.3.2 Air Emissions

There are three notable sources of air emissions at a yeast facility: the fermentors, the steam plant boiler, and the fluidized bed dryers. A wastewater treatment plant may also contribute to facility air emissions. Emissions from the fermentors and the fluidized bed dryers are yeast production process wastes, and are listed on Figure 1. All emission sources are described below.

2.3.2.1 The Fermentors

The most significant source of air emissions is the fermentors: volatile organic compounds (VOCs) are generated by metabolic activity in these vessels. Ethanol, which is formed from acetaldehyde, and carbon dioxide are of particular concern.

The referenced USEPA report estimates the VOC mass emission rate from a typical facility at 82 megagrams per year, primarily from the trade fermentors. This rate corresponds to 0.0005 kg of VOCs per liter per batch of fermentor operating capacity.

Yeast facilities typically employ process controls to reduce the amount of VOCs generated, and some facilities also apply air pollution control systems, such as wet scrubbers and incinerators. Depending on the control system, the pollution will be removed from the air through chemical alteration into less toxic substances, or through physical transfer into wastewater or solid waste. The pollutant would then have to be handled in the wastewater or solid waste, accordingly.

An on-site wastewater treatment plant is also a potential VOC emission source at the facility; significant quantities of VOCs could be emitted during microorganic digestion.

2.3.2.2 The Steam Plant Boiler

A variety of air pollutants could be emitted from combustion in the steam plant boiler. For example, fossil fuel combustion results in gaseous products, called flue-gas, and a solid ash residue, some of which is carried along with the flue-gas as fly ash. The amount and characteristics of the emissions produced depends upon the type of fuel and boiler, but usually include vanadium and sulfur and nitrogen oxides.

Like VOC emissions, boiler emissions are typically reduced with process controls and air pollution control systems, such as scrubbers; depending on the pollution control system, it may generate wastewater or solid waste.

2.3.2.3 The Fluidized Bed Dryer

Fluidized bed dryers are another potential source of air emissions. The dryer suspends moist yeast on a bed of air to further dry it; vapors and fine particulate may be given off during the process.

VOC and particulate emissions from fluidized beds can be reduced with air pollution control systems similar to those for the fermentors and boiler; again, the control system may generate wastewater or solid waste.

2.3.3 Solid Waste

Solid waste is typically the least significant source of waste from a yeast production facility. Molasses clarifier sludge is the primary solid waste generated from the yeast-making process, as is shown on Figure 1.

In addition to molasses clarifier sludge, other facility solid wastes are:

- Steam plant boiler combustion residue, (bottom ash);
- Wastewater treatment plant sludge;
- Residue from air emission control devices, if any (these are noted in the previous section);and
- General housekeeping, or janitorial, and domestic wastes.

The solid wastes are typically hauled off-site to be disposed.

3.0 THE YEAST INDUSTRIES COMPANY, LTD.

The Yeast Industries Company, Ltd. (YIC) operates a facility producing compressed and dry active baker's yeast. It is a privately owned company which was established in 1976 and started production in 1978. In 1992 the facility's production was 2,582 tons of compressed yeast and 865 tons of dry yeast. This output was only slightly greater than half of the facility's total production capacity, which is 6,000 tons per year. The facility operates 24 hours a day, six to seven days a week.

The facility is located on the north bank of the Zarqa River in Jordan. The location is an agricultural area near the western perimeter of the Russeifa Municipality, 20 kilometers east of Amman. The facility covers 10,000 square meters of land.

Processes at the YIC are very similar to the typical processes described in the previous section of this report. The following three sections are intended to better describe operations specific to YIC.

3.1 Process Description

The facility's production processes are schematicized in Figure 2. As shown on the figure, YIC's operations appear to be typical for a facility having a two-vessel main fermentation stage. The figure, adapted from a schematic provided to Harza in the referenced COWIconsult/Royal Scientific Society report, indicates that both main fermentors are batch fermentors, rather than incrementally fed vessels. The cooling system used for the fermentors is a closed system with cooling towers.

As is typical, following fermentation, cultivated yeast is separated from the substrate by filtration, dewatered and/or dried, and packaged for sale. The compressed yeast product is dewatered on a rotary vacuum filter until it reaches 28% solids content. This product is packaged in 0.5 kg packs. The dry yeast product is dewatered on a filter press, then, after extrusion, is further dried on a fluidized bed dryer; the resultant product has a 95 to 98% solids content. This product is packaged in 100 g, 500 g, and 1kg packs and 25 kg bags.

3.2 Raw Materials and Water Supply

The facility's consumption of raw materials in 1992 was as follows:

Raw Material	Consumption (Ton)
Substrate	
Beet Molasses	8,000
Ammonium Phosphate	56
Potassium Chloride	21
Magnesium Sulfate	21
Urea	195
Vitamins	1
pH Control and Cleaning Agents	
Sodium Hydroxide	20
Sulfuric Acid	112
Product Drying Aid	
Sodium Chloride	18

All process water is supplied by a private well. The consumption is estimate to 600 cubic meters per day (m^3/d), or 150,000 to 180,000 m^3/year. approximately 50 m^3 of water per ton of yeast product, or 100 m^3 per ton The COWIconsult/Royal Scientific Society report states that this is rather typical European rates of 30 m^3 of water per ton of dry solid yeast.

Process water is primarily used in the production process and for clean including machinery and tanks. There is a considerable demand for coc fermentation process.

3.3 Wastewater Discharges

Wastewater sources include spent substrate solution and rinse water from product recovery, filter discharge from product filtration, equipment and floor wash-down water, boiler blowdown, and domestic water. All discharged wastewater is applied to the land in a nearby forest.

Average 1993 values for measured wastewater parameters are given in the following table:

Parameter	Value (mg/L *)
pH	6.55
BOD**	6,004
COD**	12,601
TSS**	954.4
TDS**	7,374
Ammonium	142.3
Phosphate	43.6
Boron	3.0
Cadmium	0
Chromium	0
Copper	0
Iron	3.7
Lead	0.6
Manganese	0.3
Nickel	0.2
Zinc	0.2

* The pH value does not have units.
** BOD: Biochemical Oxygen Demand; COD: Chemical Oxygen Demand; TSS: Total Suspended Solids; TDS: Total Dissolved Solids

4.0 AREAS FOR POTENTIAL IMPROVEMENT

Beyond assembling background information regarding baker's yeast production facilities, the primary purpose of this document is to present information gathered from the literature search regarding the latest advances in water conservation, pollution prevention, and waste minimization.

The subjects can be generally defined as follows:

> **Water Conservation:** Reducing the process, clean-up, and domestic water use requirements of a facility.
>
> **Pollution Prevention and Waste Minimization (PP/WM):** Reducing the volume or concentration of water, air, and solid waste discharges from a facility. PP/WM can be accomplished by implementing process improvements to actually reduce the amount of wastes generated or by developing a beneficial reuse for the waste and transforming it into a marketable by-product.

The following sections present techniques identified as areas for potential improvement at YIC. Since the focus of the IWDPP project is on water, PP/WM techniques pertaining to air emissions and solid wastes are given secondary importance in the discussion. The discussion will include as much information on source reduction, in-process recycling, clean technologies, raw material substitution, and preventative maintenance as was possible to obtain through the literature search. The areas for improvement listed are only suggestions for a typical yeast production facility; their applicability and net benefit to YIC depends on facility-specific factors.

4.1 Water Conservation

Water conservation improvements identified in the literature apply to recycling treated wastewater, steam, and process water, and replacing the cooling water system. General process improvements and good housekeeping practices have also been identified as water conservation techniques. All identified techniques are described in the following sections.

4.1.1 Wastewater Treatment Plant Recycle

Secondarily treated wastewater is used as a cooling medium at industrial facilities in a program sponsored by the King County, Washington, Department of Metropolitan Services. This program supplies and reaccepts treated municipal wastewater to local industries through an extensive looped pipeline system. A similar, smaller-scale system could also be developed for an individual facility that has its own wastewater treatment plant.

The cooling system works by pumping effluent from the wastewater treatment plant to heat exchangers at the industrial facility; the heat exchangers transfer process heat to the piped effluent. After it has been used to cool, the effluent is returned to the treatment plant to be discharged as usual.

Using wastewater treatment plant effluent conserves more water than conventional cooling systems, even those that recycle water through cooling towers. The system in Washington is expected to save one user facility 40 million gallons of water each year.

4.1.2 Process Water Recycle

Water that would otherwise become wastewater can potentially be conserved through recycle as process water in two facility processes: molasses preparation and product recovery. These applications are suggested provided they do not adversely affect the quality of the yeast product.

> **Molasses Preparation Water.** Fresh water is used to dilute the molasses in the molasses preparation process. The fresh water could potentially be replaced with recycled molasses tank (and other molasses equipment) rinse water.
>
> **Product Recovery Water.** Fresh water is used to rinse centrifuged yeast in the product recovery process. The fresh water could potentially be replaced with recycled centrifuge effluent, filter press effluent, or fermentor wash-down water. If the solids loading in these process waters is too great to be used effectively as rinse water, then they could be prepared for use by being clarified, filtered, and mixed with fresh make-up water.
>
> In addition, the product recovery rinse water itself can be recycled. In a process reported in a French publication (ref.: Overcash) to be widely practiced, the spent rinse water and the centrifuge effluent are evaporated and then condensed. The condensate is recycled to other facility processes, and the solids are processed as products: potassium sulfate and concentrated protein. In addition to conserving fresh water, the process has been claimed to reduce the BOD and COD levels of the wastewater from the product recovery process by approximately twenty times. A flow diagram of the process is given as Figure 3.

The applicability of these improvements may be subject to cleanliness requirements. However, since surge tanks and/or gravity separators would be required to store the recycled water, sterilization could be performed here as necessary.

4.1.3 Steam Recycle

A state-of-the-art fermentation facility operated by the Pfizer Corporation in Connecticut captures spent sterilization steam. Instead of being wasted to the air, the spent steam

goes to a catch compartment for condensation and disinfection before any effluent leaves the plant. This condensate could potentially be recycled back into steam or into another process at the facility.

4.1.4 General Process and Management Improvements

Several general process improvements having the potential to conserve water have been identified and are listed here:

- Most importantly, explore installing a wastewater treatment system, with recycle, to treat and then reuse wastewaters generated at the facility.

- Minimize floor and equipment washes, as well as the volume of water used in each. As an example, higher pressure/temperature water streams may reduce the volume of water required to clean a surface. The applicability of this improvement may be subject to regulatory or process requirements.

- Where appropriate, use the last rinse from a piece of equipment as the first rinse (on the same piece of equipment) the next time around.

- Generate an accurate measurement and balance of facility water use. The balance should track process water use per batch of yeast. Compare the measurements to those of typical European facilities and make process adjustments accordingly. (The COWIconsult/Royal Scientific Society report states that the facility's water use is estimated to be much greater than that required by a typical European facility.)

- Install flow-control valves and timers on pipes and other equipment to better control process water usage.

- Implement a water management system that involves facility personnel, such as employee training in water use reduction programs and good housekeeping.

4.2 Pollution Prevention/Waste Minimization

The state-of-the-art PP/WM opportunities documented in the literature apply primarily to air emissions. However, techniques that apply to water and solid wastes have also been identified. All opportunities are summarized in the following sections.

4.2.1 Wastewater PP/WM

Nearly all of the water conservation techniques stated in the previous section also apply to wastewater PP/WM. The techniques that can most significantly be used for wastewater PP/WM are:

- Product recovery and recycle, such as the Overcash process water recycle system described above and illustrated in Figure 3. This system not only reduces the need for fresh water, but also reduces the amount of process effluents discharged as waste by recycling them.

- Process optimization. Two examples are:

    i) Installing flow-control valves and timers on pipes and other equipment to better control process water usage; the less water that is used, the less water that is discharged as waste.

    ii) Using incrementally-fed fermentor systems. Because these systems maximize the yeast yield from a given amount of substrate, less material has to be input to the system for the same product output. As a result, the wastes generated during production are minimized.

- Good housekeeping practices. For example, using the last rinse from a piece of equipment as the first rinse the next time around not only reduces fresh water consumption, it also reduces wastewater discharge.

- A wastewater treatment system. Two very effective systems, the Biothane system and a sequencing batch reactor system, are described below.

  Biothane. An anaerobic biological wastewater treatment technology has been developed by Biothane Corporation of New Jersey. Biothane's system is used to treat baker's yeast wastewater at more than a dozen facilities throughout the world, including one in the Middle East. The two most significant benefits of the process are:

    i) Greatly lower sludge generation than conventional aerobic biological treatment processes (only one-tenth as much).

    ii) A useable energy by-product in the form of methane gas. The methane gas could be used to generate electricity at the yeast facility or to fire the steam plant boiler.

The [illegible]

More specifically, the Biothane process is as follows: first, wastewater enters the bottom of a digester tank and passes upwards through a dense bed of anaerobic sludge. Soluble COD is converted to biogas rich in methane and an upward circulation of water and gas-borne sludge is established.

Separators at the top of the tank allow degasification of the water/sludge slurry. The directly combustible biogas is recovered from collection pockets. The granular sludge particles, now devoid of attached gas bubbles, sink back to the bottom of the tank, establishing a return circulation. The treated effluent flows over a weir at the top of the tank and is discharged. The established upward and downward circulation pattern insures effective sludge-to-wastewater contact without the need for supplementary agitation.

The BOD purification efficiency achieved through the Biothane process has been determined to be up to 90%; the COD purification efficiency is typically 65%.

Sequencing Batch Reactors (SBRs). An SBR is an aerobic biological treatment unit. Specifically, it is a fill-and-draw activated sludge system comprised of treatment tanks operated in a batch treatment mode. (Most conventional activated sludge systems are operated in a continuous-flow mode.)

The cycle for a typical SBR tank is divided into the following five discrete periods: fill with wastewater, bioreact, settle solids, withdraw clarified supernatant, and idle to await refill. Since treatment and settling are accomplished in the same tank, SBR systems do not need separate final clarifiers and return activated sludge pumps.

The reason that this treatment technology is significant to a yeast facility is that SBR tanks can easily tolerate shock loads of BOD without degradation in effluent quality. In fact, the performance of several conventional activated sludge systems have been shown to significantly improve after conversion to SBR operation.

4.2.2 Air Emission PP/WM

The air emission PP/WM techniques identified in the literature apply to controlling fermentor VOC emissions and controlling boiler emissions. The topics are discussed in that order below.

4.2.2.1 Fermentor VOC Emissions

The primary air pollutant from yeast facilities is VOC emissions from the fermentors. As stated in Section 2.3.2.1, yeast facilities typically employ process controls to reduce the amount of VOCs generated, and some facilities also apply air pollution control systems, such as wet scrubbers and incinerators. Although these technologies are not state-of-the-art, a discussion of VOC emissions will be presented here based on the results of a recent study to identify the best VOC control devices.

The USEPA, through the Control Technology Center, performed a comprehensive evaluation of VOC emission control alternatives. The following alternatives were evaluated:

- Process control measures to reduce the formation of VOC emissions;
- Wet scrubbers;
- Carbon adsorbers;
- Incinerators;
- Condensers; and
- Biological filters.

The study results indicate that process control measures and trains of treatment technologies are the most feasible ways to control emissions.

Process Control Measures. Process control measures are expected to reduce VOC emissions from 75 to 95%; an example is incremental feed systems. Incrementally-fed fermentors, as opposed to batch fermentors, can limit the amount of ethanol formed during fermentation.

As has been stated previously, they accomplish this by matching the addition of substrate to the yeast's growth curve. By maintaining a low excess-sugar concentration and sufficiently aerating the fermentor, the yeast's respiratory activity is maximized. The result is a greatly increased final yield and decreased VOC emission rate. Since the majority of yeast growth occurs in the final fermentation stages, it is most beneficial to equip the final fermentors with incremental feed systems.

Treatment Trains. The efficiency associated with train of technologies is estimated to be greater than 90%; an example is a wet scrubber followed by a catalytic incinerator or biological filter.

It is significant to note that since some of these technologies, wet scrubbers for example, consume water, a trade-off between emission reduction and water conservation exists.

4.2.2.2 Boiler Emissions

Emissions of concern from a boiler burning fossil fuels are sulfur oxide, NOx (oxides of nitrogen), and fly ash. State-of-the-art PP/WM techniques for each are described below.

Sulfur Oxide. The simplest way to reduce sulfur oxide emissions is to burn fuel containing relatively less sulfur. Beyond that, sulfur oxide emissions are typically reduced in a flue-gas desulfurization system. Lime scrubbing is the most common system, but because it can generate a significant amount of wastes, magnesium-enhanced-lime scrubbing and dry scrubbing are emerging as alternatives to lime scrubbing. Each are described briefly here.

Lime Scrubber

In a typical lime scrubber the sulfur oxide reacts with a lime slurry and forms sulfite or sulfate solids that remain in solution or suspension with the slurry. The solids are separated from the slurry in settling tanks, the liquid is enriched by adding more lime, and then is recirculated. The sulfite may be stored in basins or ponds, or converted to gypsum through oxidation.

Magnesium-Enhanced-Lime Scrubber

The addition of magnesium in a magnesium-enhanced-lime scrubber increases the absorption capacity of the slurry by 10 to 15 times. Thus, sulfur oxide removal efficiencies can be greatly improved with significantly less liquid waste.

Dry Scrubber

In a dry scrubber, liquid slurry drops containing very little water are sprayed into a hot gas stream. The liquid evaporates as chemical reactions and absorption of sulfur dioxide occurs in reactions similar to those in wet scrubbers. The solid particles can be collected along with the fly ash. The advantage of dry scrubbers is that a dry powder is produced, avoiding disposal of a liquid slurry or wet sludge, and water is conserved as well.

NOx. The basic tools for reducing NOx emissions have not changed much in the past twenty years, but the manner in which they are being applied has. Categories of NOx PP/WM options receiving the most attention in the literature include combustion modifications and post-combustion control devices, such as selective catalytic reduction and

selective noncatalytic reduction systems. Both methods are briefly described here.

Combustion Modifications

Combustion modifications control nitrogen oxide emissions by reducing the amount of pollutant produced. Reducing the formation of NOx depends on carefully controlling the combustion temperature and fuel-air mixture in various parts of the flame. Low-NOx burners can reduce emissions to about 15% of uncontrolled levels.

Selective Catalytic and Noncatalytic Systems

Selective catalytic and noncatalytic systems use ammonia to reduce NOx to water and elemental nitrogen. The pertinent reactions normally proceed at very high temperatures, so in selective catalytic systems a catalyst is used to promote the reactions at lower temperatures. In selective non-catalytic systems, an ammonia compound is injected into the boiler at the appropriate temperature window. These systems can remove between 30 and 80% of NOx emissions. Some systems can also be adapted to remove sulfur oxides at up to 95% efficiency.

Fly Ash. Fly ash is typically collected on a standard control device, such as an electrostatic precipitator, and then ponded or landfilled. However, partial utilization of the collected ash to manufacture pozzolanic material has become more commonly practiced. The pozzolanic material can be used as fill for roads, runways, and construction sites, and as cement and brick admixtures. Recovery of the metal components of the ash, such as aluminum, vanadium, titanium, and iron, for commercial use is also now possible.

4.2.3 Solid Waste PP/WM

The only potential PP/WM technique identified for solid wastes is to reslurry the molasses sludge and reuse it to produce the molasses substrate, if technically feasible.

130

5.0 REFERENCES

The following documents were reviewed to prepare this report. The essential components of each are included as an attachment to this report under a separate cover.

1. Arora, M.L., and E. Barth, M.B. Umphres. "Technology Evaluation of Sequencing Batch Reactors." Journal WPCF. Volume 57, No. 8, August 1985. p. 867-875.

2. "Background Report: Thermal Electric Power Plant Industry, Al Husein Thermal Power Station, Jordan." USAID, Report No. 3114-94-2b-07. October, 1994.

3. Barker, Robin and Maresa Williamson. Assessment of VOC Emissions and Their Control from Baker's Yeast Manufacturing Facilities. USEPA Control Technology Center. January, 1992.

4. "Biothane Anaerobic Wastewater Treatment Process." Pamphlet published by the Biothane Corp., New Jersey, USA. 1992.

5. Ciftci, T. and I. Ozturk. "Anaerobic Treatment from the Yeast Industry." Water Science and Technology. Volume 28, No. 2, 1993. p. 200-209.

6. "Enterprise No. 24: Yeast Industries Co., Ltd." Industrial Pollution Control Project, Jordan. Project Component No. 2: Industrial Wastewater Pretreatment Requirements Report, Chapter 32. COWIconsult/Royal Scientific Society.

7. Overcash, M.R. Techniques for Industrial Pollution Prevention. Lewis Publishers, Michigan, USA. 1986. p. 42-43.

8. "Pfizer Starts Up Advanced Fermentation Plant." Chemical & Engineering News. October 14, 1991. p. 25.

9. Shreve, R. Norris and Joseph A. Brink, Jr. Chemical Process Industries, 4th Edition. Fermentation Industries, Chapter 31. McGraw-Hill, Inc., New York, USA. 1977.

10. "Wastewater is No Waste if It's Reused." Civil Engineering. December, 1994. p. 14.

151

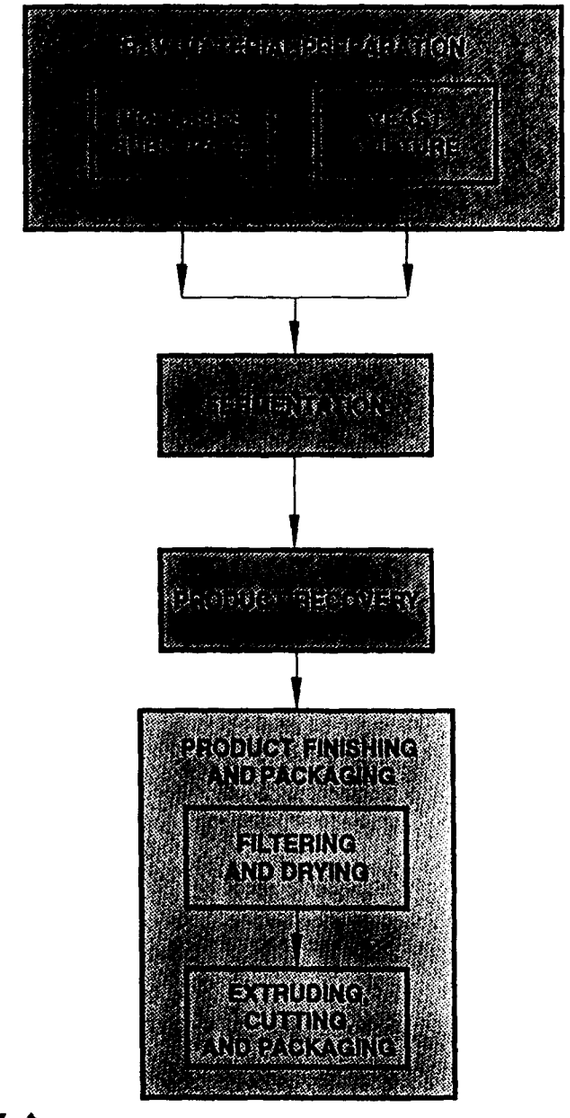

KEY: Associated Process(es) indicated by color

INPUTS	WASTES
INPUTS Emulsifier Molasses Nutrients Oil pH Adjusters Salt Starch Vitamins Water	**WATER** Filtration Effluent Molasses Clarification Effluent Product Rinse Water Spent Substrate Solution Wash-down Water **AIR** Dryer Emissions Volatile Organic Compounds **SOLID** Molasses Sludge

HARZA *Consulting Engineers and Scientists*

Figure 1

BLOCK FLOW DIAGRAM

TYPICAL BAKER'S YEAST PRODUCTION PROCESS

INDUSTRIAL WASTEWATER DISCHARGE PREVENTION

WATER QUALITY IMPROVEMENT AND CONSERVATION PROJECT

Amman, Jordan

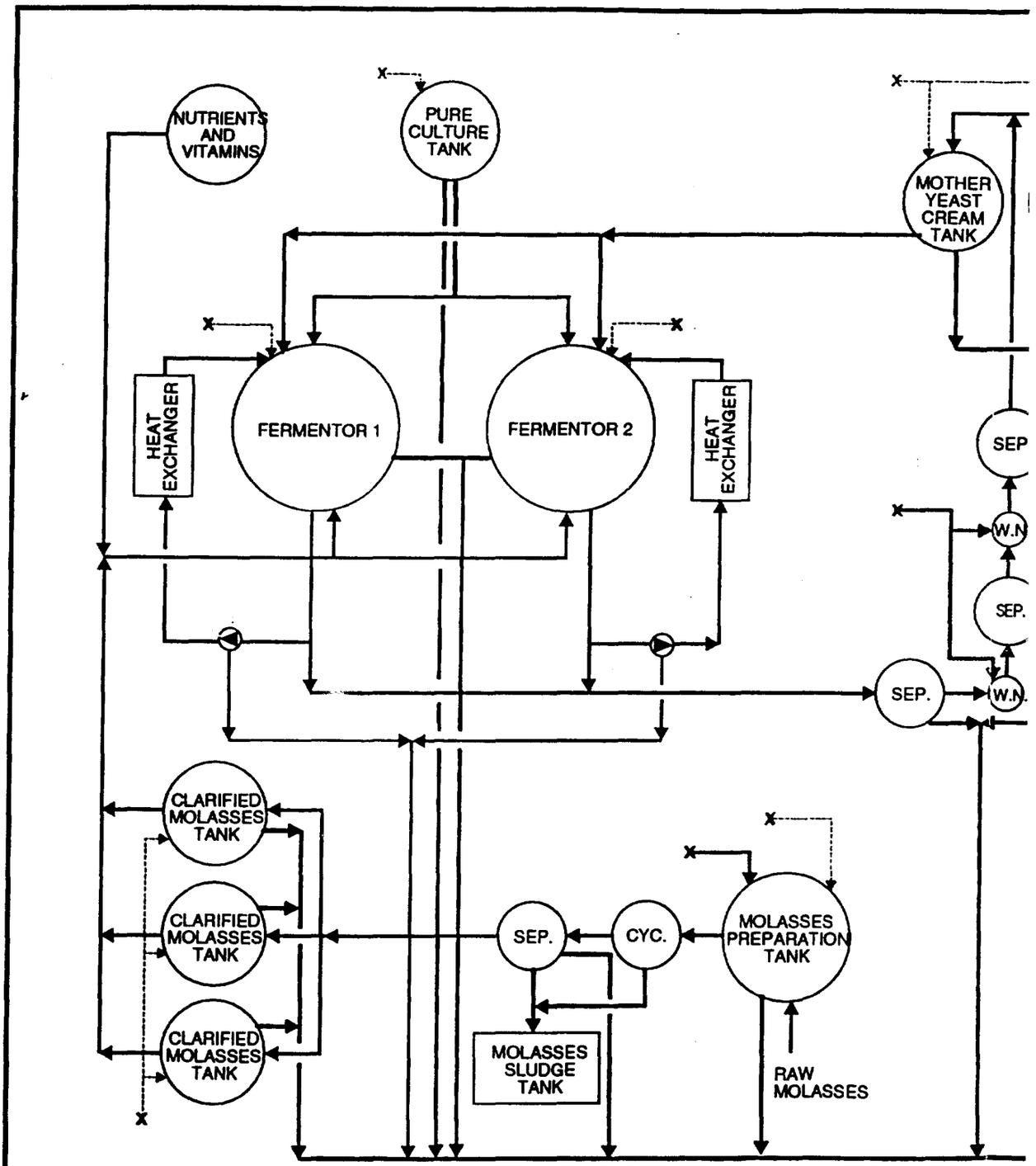

HARZA Consulting Engineers and Scientists

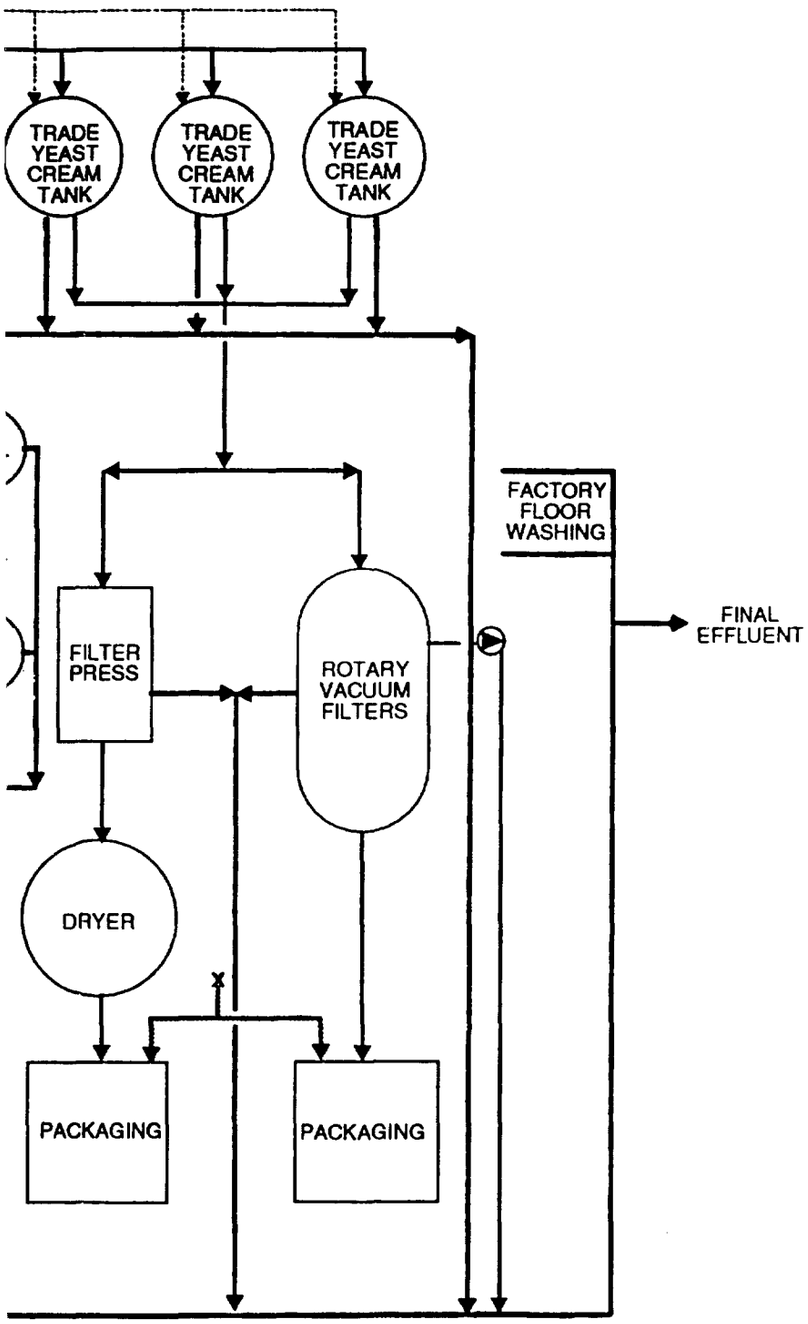

LEGEND:

- Process Line
- Equipment Rinses
- Process Overflow
- Emergency Relief
- Process Water
- Sterilization Steam
- Cyc. Cyclone
- Sep. Separator
- W.N. Washing Nozzle

153

Figure

PROCESS FLOW DIAGRAM

YEAST INDUSTRIES CO., LTD

Ruseifa, Jorda

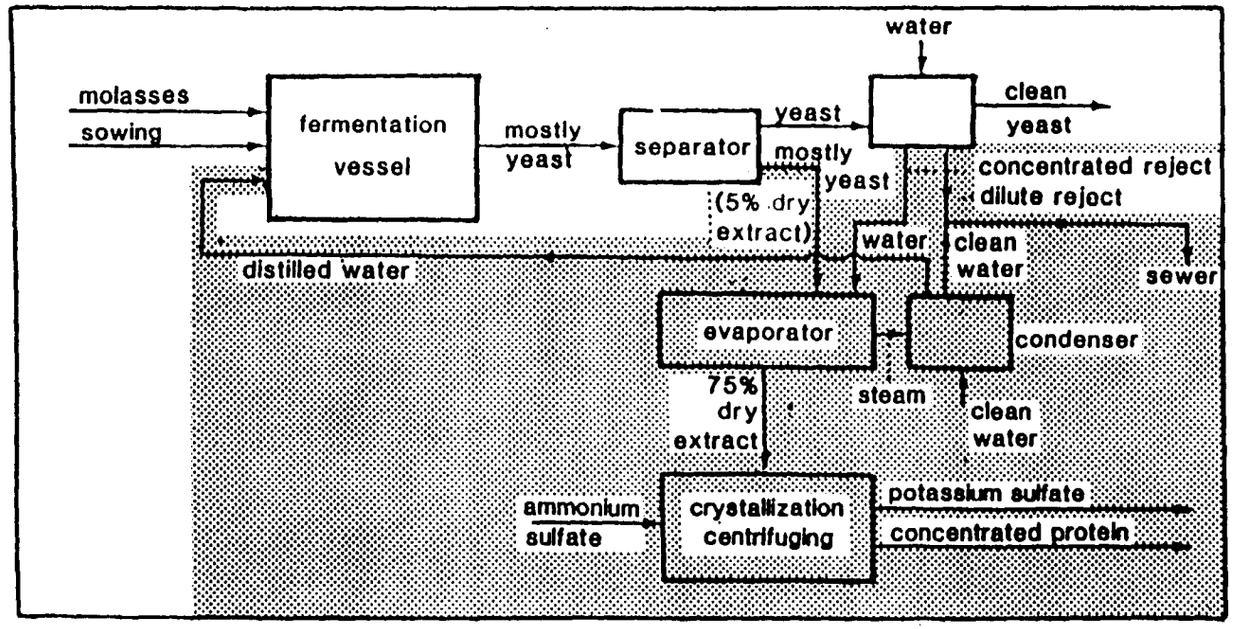

SOURCE: Overcash, M.R.
Techniques for Industrial Pollution Prevention

Figure 3
PROCESS WATER RECYCLE DIAGRAM
INDUSTRIAL WASTEWATER DISCHARGE PREVENTION
WATER QUALITY IMPROVEMENT AND CONSERVATION PROJECT

APPLICABLE REGULATORY CRITERIA

Current Status of Environmental Regulations in Jordan:

In order to assess the Yeast Industry Company (YIC) compliance with applicable Jordanian standards and regulations, it is of importance at this stage to present an overview of Jordan's environmental protection control laws, standards, and regulations. Interestingly, Jordan has no comprehensive law to control water, air, and soil pollution. However, a Jordanian Environment Act (JEA) was drafted two years ago to achieve the principle objectives mentioned in the National Environment Strategy (NES) for Jordan. JEA is currently awaiting approval from the Parliament.

In general, the nature of water pollution standards and regulations in Jordan vary according to sources. Industrial wastewater discharges are regulated by the Jordanian Standard Specification number 202 (Table E-1) adopted in 1981 by the Department of Standards and Specifications (DSS) and revised in 1990. Standard 202 regulates industrial wastewater discharges to rivers, wadis, groundwater, the sea, and reuse for irrigation. This standard covers 37 pollutant parameters and sets maximum allowable concentration limits of pollutants in the discharged industrial wastewater effluents. Moreover, the standard also contains narrative conditions to protect public health, aquatic life, worker health; and groundwater quality. The standard is not associated with a permitting mechanism and therefore is self-implementing.

Drinking water quality is regulated by the Jordanian standard number 286. Tables E-2a - E-2e present quantitative requirements of pertinent characteristics including physical, chemical, radiation, and health related issues. With regards to regulations related to the quality of treated domestic wastewater to be reused in irrigation, Jordan has neither standards nor

guidelines. However, it is a common practice to use the Food and Agriculture Organization (FAO) and World Health Organization (WHO) Guidelines as a reference.

Tables E-3 through E-5 are related to the quality of treated domestic wastewater effluents to be reused in irrigating agricultural crops. The remaining Tables E-6 - E-12 present the tolerance and sensitivity of crops to salinity and other specific ions like Sodium, Boron and Chloride. These are adapted from the FAO Guidelines (1985). Treated domestic wastewater is regulated by the Jordanian Standard 893 (Table E-13) adopted in 1994 by DSS. Regarding air pollution, Jordan does not have any existing standards or regulations to control air pollution.

Regulations Applicable to the YIC Discharges:

Industrial wastewater produced by the YIC consists of wastewater generated from yeast separation, filter press and rotary vacuum filter effluents, tank washing, floor washing softener regeneration, floor and equipment washing, laboratory and sanitary. All of these wastewater streams except sanitary are utilized in land application irrigating a nearby forest, therefore the Jordanian standard 202 for industrial discharges to wadis, sea, or reuse for irrigation would apply.

Table E-1

Summary of requirements of Jordan Standard 202/1991 for disposal of industrial effluents.

Parameter	Maximum Allowable Limit, (mg/l)+			
	Disposal To			
	Wadis & Rivers	Sea	Groundwater Recharge	Reuse for Irrigation**
BOD5	50M	-	50M	-
COD	150M	200	150M	-
DO	1*	5*	1*	1*
TDS	3000(1)	-	1500 (1)	2000 (2)
TSS	50	-	-	100 (3)
pH (su)	6.5-9.0	5.5-9.0	6.5-9.0	6.5-8.4
Color (unit)	15	75	15	-
TC	-	4	-	-
FOG	5	10	Absent	5
Phenol	0.002	1	0.002	0.002
MBAS	25		15	-
NO3-N	12 (4)	-	12 (4)	30
NH3	5	12	5	5
T-N	-	125	-	50
PO4-P	15	-	-	-
Cl	500	-	500	350 (3)
SO4	500	-	500	400
F	1.5	-	1.5	-
HCO3	-	-	-	500
Na	-	-	400	-
Mg	-	-	-	-
Ca	-	-	-	-
SAR	-	-	-	9
Al	5	-	0.3	5
As	0.05	0.1	0.05	0.1
B	1	-	1	1 (5)
Cr	0.1	0.3	0.05	0.1
Cu	2	0.1	2	0.2
Fe	1	2	1	5
Mn	0.2	0.2	0.2	0.2
Ni	0.2	0.02	0.1	0.2
Pb	0.1	0.1	0.1	1
Se	0.02	0.02	0.05	0.02
Cd	0.01	0.07	0.02	0.01
Zn	15	-	15	2
CN	0.1	1	0.1	0.1
Hg	0.001	0.001	0.001	0.001
TCC MPN/100ml		5000	-	-
TFCC MPN/100ml	1000(6)	-	1000 (6)	1000 (6)
Nematodes	< 1	-	-	< 1

(+) All units are in mg/l except where noted.
(*) Minimum value.
(**) Depends upon, type and quantity of crops, irrigation methods,soil type, climate & groundwater in the area concerned.
(-) Undetermined.
(M) Monthly average.

Notes:
(1) TDS allowable limit is subject to the TDS concentration in the water supply and the water basin affectd.
(2) Allowable limits of wastewater reuse determine the degree of restriction (none, slight to moderate, or severe).
(3) Method of irrigation is determined by wastewater quality being used.
(4) Nitrate concentrations allowed are determined by its concentrations in the affected water basin.
(5) Could reach 3 mg/l.
(6) Geometric mean.

Table E-2a
Jordanian Drinking Water Standards
A: Physical characterstics

Parameter	Permissible Limit	Max. allowable conc. in case no better source is available
Taste	aesthetically acceptable	-
Odor	aesthetically acceptable	-
Color	10 units	15 units
Turbidity	1 unit (JCU)	5 units
pH	$6.5 < pH < 9$	-
Temperature	8 - 25 c	-

Table E-2b

Jordanian Drinking Water Standards

B: Chemical Charecterstics

Parameter	Max. Allowable Conc. mg/l
Pb	0.05
Se	0.01
As	0.05
Cr	0.05
CN	0.1
Cd	0.005
Hg	0.001
Sb	0.01
Ag	0.01

Table E-2c
Jordanian Drinking Water Standards
C: Health related

Parameter	Permissible Limit mg/l	Max. allowable conc. in case no better source is avialable	Effects within max. allowable limits
TDS	500	1500	aesthetic
TH(CaCO3)	100	500	aesthetic
ABS	0.5	1	indicator
Al	0.2	0.3	aesthetic
Fe	0.3	1	aesthetic
Mn	0.1	0.2	aesthetic
Cu	1	1.5	aesthetic
Zn	5	15	aesthetic
Na	200	400	aesthetic
Ni	0.05	0.1	health
Cl	200	500	aesthetic
F	1	1.5	health
SO4	200	500	aesthetic
NO3	45	70	health

Table E-2d

Jordanian Drinking Water Standards
D: Radiation

Parameter	Maximum limit Bq/l
Alpha-emitters (except for Radon)	0.1
Beta-emitters	1

Table E-2e

Jordanian Drinking Water Standards
E: Organic pollutants*

Parameter	Max. Permissible Conc. mg/l
A) Chlorinted Hydrocarbons	
Endrin	0.0002
Lindane	0.004
Methoxychlor	0.1
Toxaphene	0.005
B) Chlorophenoxys	
2,4-D	0.1
2,4,5-TP (Trichlorophenoxy propionic acid)	0.01

* Other organic pollutants should not exceed the max. allowable limit set by WHO.

Table E-3

Guidelines for interpretations of water quality for irrigation (1)

Potential irrigation problems	Units	Degree of restriction on use: None	Slight to moderate	Severe
Salinity (affects crop water availability) (2)				
EC_w (or)	dS/m	< 0.7	0.7 - 3.0	> 3.0
TDS	mg/l	< 450	450 - 2000	> 2000
Infiltration (affects infiltration rate of water into the soil. Evaluate using (EC_w and SAR together) (3)				
SAR = 0-3 and EC_w	=	> 0.7	0.7 - 0.2	< 0.2
= 3-6	=	> 1.2	1.2 - 0.3	< 0.3
= 6-12	=	> 1.9	1.9 - 0.5	< 0.5
= 12-20	=	> 2.9	2.9 - 1.3	< 1.3
= 20-40	=	> 5.0	5.0 - 2.9	< 2.9
Specific ion toxicity (affects sensitive crops)				
Sodium (Na) (4)				
Surface irrigation	SAR	< 3	3 - 9	> 9
Sprinkler irrigation	me/l	< 3	> 3	
Chloride (Cl) (4)				
Surface irrigation	me/l	< 4	4 - 10	> 10
Sprinkler irrigation	me/l	< 3	> 3	
Boron (B) (5)	mg/l	< 0.7	0.7 - 3.0	> 3.0
Trace elements(see table E4)				
Miscellaneous effects (affects susceptible crops)				
Nitrogen (NO3-N) (6)	mg/l	<5	5 - 30	> 30
Bicarbonate (HCO3) (Overhead sprinkling only)	me/l	< 1.5	1.5 - 8.5	> 8.5
pH			Normal range 6.5 - 8.4	

(1) Adapted from University of California Committee of Consultants 1974.
(2) ECw means electrical conductivity, a measure of the water salinity, reported in deciSiemens per metre at 25C^0 (dS/m) or in units millimhos per centimeter (mmho/cm). Both are equivalent. TDS means total dissolved solids, reported in milligrams per liter (mg/L).
(3) SAR means sodium adsorption ratio. SAR is sometimes reported by the symbol RNa. At a given SAR, infiltration rate increase as water salinity increases. Evaluate the potential infiltration problem by SAR as modified by ECw.
(4) For surface irrigation, most tree crops and woody plants are sensitive to sodium and chloride; use the values shown. Most annual crops are not sensitive. With overhead sprinkler irrigation and low humidity (<30 percent), sodium and chloride may be absorbed through the leaves of sensitive crops.
(5) For borm tolerances, see Tables 16 and 17.
(6) NO3-N means nitrate nitrogen reported in terms of elemental nitrogen (NH4-N and Organic-N should be included when wastewater is being tested).

Assumptions in the Guidelines

The water quality guidelines in Table 1 are intended to cover the wide range of conditions encountered in irrigated agriculture. Several basic assumptions have been used to define their range of usability. If the water is used under greatly different conditions, the guidelines may need to be adjusted. Wide deveations from the assumptions might result in wrong judgements on the usability of a particular water supply, especially if it is a borderline case. Where sufficient experience, field trials, research or observations are available, the guidelines may be modified to fit local conditions more closely.

The basic assumptions in the guidelines are:

Yield Potential: Full production capability of all crops, without the use of special practices, is assumed when the guidelines indicate no restrictions on use. A "restriction on use" indicates that there many be a limitation in choice of crop, or special management may be needed to maintain full production capability. A "restriction on use" does not indicate that the water is unsuitable for use.

Site Conditions: Soil texture ranges from sandy-loam to clay-loam with good internal drainage. The climate is semi-arid to arid and rainfall is low. Rainfall does not play a significant role in meeting crop water demand or leaching requirement. (In a monsoon climate or areas where precipitation is high for part or all of the year, the guideline restrictions are too severe. Under the higher rainfall situations, infiltrated water from rainfall is effective in meeting all or part of the leaching requirement.) Drainage is assumed to be good, with no uncontrolled shallow water table present within 2 metres of the surface.

Methods and Timing of Irrigations: Normal surface or sprinkler irrigation methods are used. Water s applied infrequently, as needed, and the crop utilizes a considerable portion of the available stored soil-water (50 percent or more) before the next irrigation. At least 15 percent of the applied water percolates below the root zone (leaching fraction [LF] ≥ 15 percent). The guidelines are too restrictive for specialized irrigation methods, such as localized drip irrigation, which results in near daily or frequent irrigations, but are applicable for subsurface irrigation if surface applied leaching satisfies the leaching requirements.

Water Uptake by Crops: Different crops have different water uptake patterns, but all take water from wherever it is most readily available within the rooting depth. On average about 40 percent is assumed to be taken from the upper quarter of the rooting depth, 30 percent quarter, 20 percent from the third quarter, and 10 percent from the lowest quarter. Each irrigation leaches the upper root zone and maintains it at a relatively low salinity. Salinity increases with depth and is greatest in the lower part of the root zone. The average salinity of the soil-water is three times that of the applied water and is representative of the average root zone salinity to which the crop responds. These conditions result from a leaching fraction of 15-20 percent and irrigations that are timed to keep the crop adequately watered at all times.

Salts leached from the upper root zone accumulate to some extent in the lower part but a salt balance is achieved as salts are moved below the root zone by sufficient leaching. The higher salinity in the lower root zone becomes less important if adequate moisture is maintained in the upper, "more active" part of the root zone and long-term leaching is accomplished.

Restriction on Use: The "Restriction on Use" shown in Table 1 is divided into three degrees of severity: none, slight to moderate, and severe. The divisions are somewhat arbitrary since change occurs gradually and there is no clear-cut breaking point. A change of 10 to 20 percent above or below a guideline value has little significance if considered in proper perspective with other factors affecting yield. Field studies, research trials and observations have led to these divisions, but management skill of the water user can alter them. Values shown are applicable under normal field conditions prevailing in most irrigated areas in the arid and semi-arid regions of the world.

Table E-4
Recommended maximum concentrations of trace elements in irrigation water (1)

Element	Recommended maximum concentration(2) (mg/L)	Remarks
Al (aluminium)	5.0	Can cause non-productivity in acid soils (pH < 5.5). but more alkaline soils at pH > 7.0 will precipitate the ion and eliminate any toxicity.
As (arsenic)	0.10	Toxicity to plants varies widely, ranging from 12 mg/L for Sudan grass to less than 0.05 mg/L for rice.
Be (beryllium)	0.10	Toxicity to plants varies widly, raning from 5 mg/L for kale to 0.5 mg/L for bush beans.
Cd (cadmium)	0.01	Toxic to beans beets and turnips at concentrations as low as 0.1 mg/L in nutrient solutions. Conservative limits recommended due to its potential for accumulation in plants and soils to concentrations that may be harmful to humans.
Co (cobalt)	0.05	Toxic to tomato plants at 0.1 mg/L in nutrient solution. Tends to be inactivated by neutral and alkaline soils.
Cr (chromium)	0.10	Not generally recognized as an essential growth element. Conservative limits recommended due to lack of knowledge on its toxicity to plants.
Cu (copper)	0.20	Toxic to a number of plants at 0.1-1.0 mg/L in nutrient solutions.
F (fluoride)	1.0	Inactivated by neutral and alkaline soils.
Fe (iron)	5.0	Not toxic to plants in aerated soils. but can contribute to soil acidification and loss of availability of essential phosphorus and molybdenum. Overhead sprinkling may result in unsightly deposits on plants, equipment and buildings.
Li (lithium)	2.5	Tolerated by most crops to 5 mg/L, mobile in soil. Toxic to citrus at low concentrations (<0.075 mg/L). Acts similarly to boron.
Mn (manganeses)	0.20	Toxic to a number of crops at a few-tenths to a few mg/L, but usually only in acid soils.
Mo (molybdenum	0.01	Not toxic to plants at normal concentrations in siol and water. Can be toxic to livestock if forage is grown in siols with high concentrations of available molybdenum.
Ni (nickel)	0.20	Toxic to a number of plants at 0.5-1.0mg/L; reduced toxicity at neutral or alkaline pH.
Pd (lead)	5.0	Can inhibit plant cell growth at very high concentrations.
Se (selenium)	0.02	Toxic to plants at concentrations as low as 0.025 mg/L and toxic to livestock if forage is grown in soils with relatively high levels of added selenium. An essential element to animals but in very low concentrations.
Sn (tin)		
Ti (titanium)		Effectively excluded by plants; specific tolerance unknown.
W (tungsten)		
V (vanadium)	0.1	Toxic to many plants at relatively low concentrations.
Zn (zinc)	2.0	Toxic to many plants atwidely varying concentrations, reduced toxicity at pH > 6.0 and in fine textured or organic soils.

1- Adapted from National Academy of Sciences (1972) and Pratt (1972).
2- The maximum concentration is based on a water application rate which is consistent with good irrigation practices (10000 m3/ha per years). If the water application rate greatly exceeds this, the maximum concentrations should be adjusted downward accordingly. No adjustment should be made for application rates lease than 10 000 m3/ha per year. The values given are for water used on a continuous basis at one site.
Source: FAO Guidelines, R.S. Ayers & D.w. Westcot (1985).

Table E-5

Recommended microbiological quality guidelines for wastewater use in agriculture (a)

Category	Reuse conditions	Exposed group	Intestinal nematodes (b) (arithmetic mean no. of eggs per litre (c))	Faecal coliforms (geometric mean no. per 100ml) (c)	Wastewater treatment expected to achieve the required microbiological quality
A	Irrigation of crops likely to be eaten uncooked. sports fields, public parks, (d)	Workers, Consumer, public	<1	< 1000 (d)	A series of stabilization ponds designed to achieve the microbiological quality indicated, or equivalent treatment
B	Irrigation of cereal crops, industrial crops, fodder crops, Pasture and trees (e)	Workers	<1	No standard recommended	Retention in stabilization ponds for 8-10 days or equivalent helminth and faecal coliform removal
C	Localized irrigation of crops in category B if exposure of workers and the public does not occur	None	Not applicable	Not applicable	Pretreatment as required by the irrigation technology, but not less than primary sedimentation.

(a) In specific cases, local epidemiological, sociocultural and environmental factors should be taken into account, and the guidelines modified accordingly.

(b) Ascaris and Trichuris species and hookworms.

(c) During the irrigation period.

(d) A more stringent guideline (< 200 faecal coliforms per 100 ml) is appropriate for public lawns, such as hotel lawns. With which the public may come into direct contact.

(e) In the case of fruit trees, irrigation should cease two weeks before fruit is picked, and no fruit should be picked off the ground. Sprinkler irrigation should not be used.

Source: Scientific group on health aspects of use of treated wastewater for agricultural and aquaculture-W.H.O.- Geneva 18-23 Nov. 1987.

Table E-6

Chloride tolerance of some fruit crop cultivars and rootstocks.(a)

Crop	Rootstock or cultivar	Maximum permissible Cl in water without leaf injury (b),(c) (mg/L)
	Rootstocks	
Avocado (Persea americana)	West indian	180
	Guatemalan	145
	Mexican	110
Citrus (Citrus spp.)	Sunki mandarin, grapefruit	
	Cleopatra mandarin, Rangpur lime	600
	Sampson tangelo, rough lemon, sour orange, Ponkan mandarin	355
	Citrumelo 4475, trifolate orange, Cuban shaddock, Calamondin, Sweet orange, Savage citrange, Rusk citrange, Troyer citrange	250
Grape (Vitis spp.)	Salt Creek, 1613-3	960
	Dog ridge	710
Stone fruit (Prunus spp.)	Marianna	600
	Lovell, Shalil	250
	Yunnan	180
	Cultivars	
Berries (Rubus spp.)	Boysenberry	250
	Olallie blackberry	250
	Indian Summer raspberry	110
Grape (vitis spp.)	Thompson seedless, Perlette	460
	Cardinal, black rose	250
Strawberry (Fragaria spp.)	Lassen	180
	Shasta	110

(a) Data are adapted from Haas (13)
(b) For some crops, the concentrations given may exceed the overall salinity tolerance of that crop and cause some yield reduction before chloride ion toxicities. Values given are for the maximum concentration in the irrigation water. The values were derived from saturation extract data (ECe) by the following relationship : saturation extraction concentration = 1.5 water concentration.
(c) The maximum permissible values apply only to surface irrigated crops. Sprinkler irrigation may cause excessive leaf burn at values far below these, (see Table 3-10).

Source : FAO Guidelines, R.S. Ayers & D.W. Westcot (1985).

Table E-7

GUIDLINES FOR INTERPRETING LABORATORY DATA ON WATER SUITABILITY FOR GRAPES

Potential Irrigation Problem	Unita	Degree of Restriction on Use		
		None	Slight to Moderate	Severe2
Salinity [3] *(affects water availability to crops)*				
ECw	dS/m	< 1	1.0 - 2.7	> 2.7
Toxicity *(Specific ions which affect growth of crop)*				
Sodium (Na^+)[4]	me/l	< 20	-	-
Chloride (Cl^-)[4]	me/l	< 4	4 - 15	> 15
Boron (B)	mg/l	< 1	1 - 3	> 3
Miscellaneous				
Bicarbonate ($HCO3^-$)[5]	me/l	< 1.5	1.5 - 7.5	> 7.5
Nitrate-nitrogen (NO3-N)	mg/l	< 5	5 - 30	> 30

1. Adapted from Neja et al. 1978.
2. Special management practices and favorable soil conditions are required for successful production.
3. Assumes that rainfall and extra water applied owing to inefficiencies of normal irrigation will supply the crop need plus about 15 percent extra for salinity control.
4. With overhead sprinkler irrigation, sodium or chloride in excess of 3 me/l under extreme drying conditions may result in excessive leaf absorption, leaf burn and crop damage. If overhead sprinklers are used for cooling by frequent on-off cycling, damage may occur even at lower concentrations.
5. Bicarbonate (HCO3) in water applied by overhead sprinklers may cause white deposits on fruit and leaves which reduces market acceptability, but is not toxic to the plant.

Table E-8

PELATIVE SALT TOLERANCE OF VARIOUS CROPS AT GERMINATION[1]

Crop		50 percent Emergence reduction (ECe in dS/m)
Barley	*(Hordeum vulgare)*	16 - 24
Cotton	*(Gossypium hirsutum)*	15.5
Sugarbeet	*(Beta vulgaris)*	6 - 12.5
Sorghum	*(Sorghum bicolor)*	13
Safflower	*(Carthomus tinctorius)*	12.3
Wheat	*(Triticum aestivum)*	14 - 16
Beet, red	*(Beta vulgaris)*	13.8
Alfalfa	*(Medicago sativa)*	8.2 - 13.4
Tomato	*(Lycopersicon Lycopersicum)*	7.6
Rice	*(Oryza sativa)*	18
Cabbage	*(Brassica oleracea capitata)*	13
Muskmelon	*(Cucumis melo)*	10.4
Maize	*(Zea mays)*	21 - 24
Lettuce	*(Lactuca sativa)*	11.4
Onion	*(Allium cepa)*	5.6 - 7.5
Bean	*(Phaseolus vulgaris)*	8.0

[1] Data taken from Maas (1984).

Table E-9

Relative boron tolerance of agricultural crops (1), (2)

Very Sensitive (<0.5 mg/L)

Lemon	*Citrus Limon*
Blackberry	*Rubus spp.*

Sensitive (0.5-0.75 mg/L)

Avocado	*Persea americana*
Grapefruit	*Citrus X paradisi*
Orange	*Citrus sinensis*
Apricot	*Prunus armeniaca*
Peach	*Prunus persica*
Cherry	*Prunus avium*
Plum	*Prunus domestica*
Persimmon	*Diospyros Kaki*
Fig, Kadota	*Ficus carica*
Grape	*Vitis vinifera*
Walnut	*Juglans regia*
Pecan	*Carya illinoiensis*
Cowpea	*Vigna unguiculata*
Onion	*Allium cepa*

Sensitive (0.75-1.0 mg/L)

Garlic	*Allium sativum*
Sweet potato	*Ipomoea batatas*
Wheat	*Triticum eastivum*
Barley	*Hordeum vulgare*
Sunflower	*Helianthus anraius*
Bean, mung	*Vigna radiata*
Sesame	*Sesamum indicum*
Lupine	*Lupinus hartwegii*
Strawberry	*Fragaria spp.*
Artichoke, Jerusalem	*Helianthus tuberosus*
Bean, Kidney	*Phaseolus vulgaris*
Bean, lima	*Phaseolus lunatus*
Groundnut/Peanut	*Arachis hypogaea*

Moderately Sensitive (1.0-2.0 mg/L)

Pepper, red	*Capsicum crucum*
Pea	*Pisum sativa*
Carrot	*Daucus carota*
Radish	*Raphanus sativus*
Potato	*Solanum tuberosum*
Cucumber	*Cucumis sativus*

Moderately Tolerant (2.0-4.0 mg/L)

Lettuce	*Lactuca sativa*
Cabbage	*Brassica oleracea capitata*
Celery	*Apium graveolens*
Turnip	*Brassica rapa*
Bluegrass, Kentucky	*Poa pratensis*
Oats	*Avena sativa*
Maize	*Zea mays*
Artichoke	*Cynara scolymus*
Tobacco	*Nicotiana tabacum*
Mustard	*Brassica juncea*
Clover, sweet	*Melilotus indica*
Squash	*Cucurbita pepo*
Muskmelon	*Cucumis melo*

Tolerant (4.0-6.0 mg/L)

Sorghum	*Sorghum bicolor*
Tomato	*Lycopersicon Lycopersicum*
Alfalfa	*Medicago sativa*
Vetch, purple	*Vicia benghalensis*
Parsley	*Petroselinum crispum*
Beet, red	*Beta vulgaris*
Sugarbeet	*Beta vulgaris*

Very Tolerant (6.0-15.0 mg/L)

Cotton	*Gossypium hirsutum*
Asparagus	*Asparagus officinalis*

(1) Data taken from Maas (1984)
(2) Maximum concentrations tolerated in soil-water without yield or vegetative growth reductions. Boron tolerances vary depending upon climate, soil conditions and crop varieties. Maximum concentrations in the irrigation water are approximately equal to these values or slightly less.

Source: FAO Guidelines, R.S. Ayers & D.W. Westcot (1985).

Table E-10

Relative tolerance of selected crops to exchangeable sodium (1).

Sensitive (2)	Semi-tolerant(2)	Tolerant(2)
Avocado	Carrot	Alfalfa
(Persea americana)	*(Daucus carota)*	*(Medicago sativa)*
Deciduous Fruits	Clover, Ladino	Barley
Nuts	*(Trifolium repens)*	*(Hordeum vulgare)*
Bean, green	Dallisgrass	Beet, garden
(Phaseolus vulgaris)	*(Paspalum dilatatum)*	*(Beta vulgaris)*
Cotton *(at germination)*	Fescue, tall	Beet, sugar
(Gossypium hirsutum)	*(Festuca arundinacea)*	*(Beta vulgaris)*
Maize	Lettuce	Bermuda grass
(Zea mays)	*(Lactuca sativa)*	*(Cynodon dactylon)*
Peas	Bajara	Cotton
(Pisum sativum)	*(Pennisetum typhoides)*	*(cossypium hirsutum)*
Grapefruit	Sugarcane	Paragrass
(Citrus paradisi)	*(Saccharum officinarum)*	*(Brachicria mutica)*
Orange	Berseem	Rhodes grass
(Citrus sinensis)	*(Trifolium alexandrinum)*	*(Chloris gayana)*
Peach	Benji	Wheatgrass, crested
(Prunus persica)	*(Melilotus parviflora)*	*(Agropyron cristatum)*
Tangerine	Raya	Wheatgrass, fairway
(Citrus reticulata)	*(Brassica juncea)*	*(Agropyron cristatum)*
Mung	Oat	Wheatgrass, fairway tall
(Phaseolus aurus)	*(Avena sativa)*	*(Agropyron slongatum)*
Mash	Onion	Karnal grass
(Phaseolus mungo)	*(Allium cepa)*	*(Diplachra fusca)*
Lentil	Radish	
(Lens culinaris)	*(Raphanus sativus)*	
Groundnut *(peanut)*	Rice	
(Arachis hypogaea)	*(Oryza sativus)*	
Cram	Rye	
(Cicer arietirum)	*(Secale cereale)*	
Cowpeas	Ryegrass, Italian	
(Vigna sinensis)	*(Lolium multiflorum)*	
	Sorghum	
	(Sorghum vulgare)	
	Spinach	
	(Spinacia oleracea)	
	Tomato	
	(Lycopersicon esculentum)	
	Vetch	
	(Vicia sativa)	
	Wheat	
	(Triticum vulgare)	

Adapted from data of FAO-Unesco (1973); Pearson (1960); and Abrol (1982).
Source: FAO Guidelines, R.S. Ayers & D.W. Westcot (1985).

Table E-11

LABORATORY DETERMINATIONS NEEDED TO EVALUATE COMMON IRRIGATION WATER QUALITY PROBLEMS

Water parameter	Symbol	Unit[1]	Usual range in irrigation water	
SALINITY				
Salt Content				
Electrical Conductivity	EC_w	dS/m	0 - 3	dS /m
(or)				
Total Dissolved Solids	TDS	mg/l	0 - 2000	mg/l
Cations and Anions				
Calcium	Ca^{++}	me/l	0 - 20	me/l
Magnesium	Mg^{++}	me/l	0 - 5	me/l
Sodium	Na^{+}	me/l	0 - 40	me/l
Carbonate	CO_3^{--}	me/l	0 - .1	me/l
Bicarbonate	HCO_3^{-}	me/l	0 - 10	me/l
Chloride	Cl^{-}	me/l	0 - 30	me/l
Sulphate	SO_4^{--}	me/l	0 - 20	me/l
NUTRIENTS[2]				
Nitrate - Nitrogen	NO_3 - N	mg/l	0 - 10	mg/l
Ammonium - Nitrogen	NH_4 - N	mg/l	0 - 5	mg/l
Phosphate - Phosphorus	PO_4 - P	mg/l	0 - 2	mg/l
Potassium	K^{+}	mg/l	0 - 2	mg/l
MISCELIANEOUS				
Boron	B	mg/l	0 - 2	mg/l
Acid / Basicity	pH	1 - 14	6.0 - 8.5	
Sodium Adsorption Ratio[3]	SAR	(me/1)[1,2]	0 - 15	

1. dS/m = desiSiemen/meter in S.I. units (equivalent to 1 mmho / cm - 1 millimmho / centimeter)
   mg/l = milligram per litre ~ parts per million (ppm).
   me/l = milliequivalent per litre (mg/l ÷ equivalent weight = me/l); in SI units, 1 me/l = 1 millimol / litre adjusted for electron charge.
2. NO3-N means the laboratory will analyse for NO3 but will report the NO3 in terms of chemically equivalent nitrogen. Similarly, for NH4-N, the laboratory will analyse for NH4 but report in terms of chemically equivalent elemental nitrogen. The total nitrogen available to the plant will be the sum of the equivalen elemental nitrogen.
   The same reporting method is used for phosphorus.
3. SAR is calculated from the Na, Ca and Mg reported in me/l.

Table E-12 Continued

	Yield potential									
	100%		90%		75%		50%		0%maximum (3)	
	ECe	ECw	ECe	ECw	ECe	ECw	ECe	ECw	Ece	ECw
Harding grass *(Phalaris tuberosa)*	4.6	3.1	5.9	3.9	7.9	5.3	11	7.4	18	12
Fescue, tall *(Festuca elatior)*	3.9	2.6	5.5	3.6	7.8	5.2	12	7.8	20	13
_Wheatgrass, standard crested *(Agropyron sibiricum)*	3.5	2.3	6.0	4.0	9.8	6.5	16	11	28	19
Vetch, common *(Vicia angustifolia)*	3.0	2.0	3.9	2.6	5.3	3.5	7.6	5.0	12	8.1
Sudan grass *(Sorghum sudanense)*	2.8	1.9	5.1	3.4	8.6	5.7	14	9.6	26	17
Wildrye, beardless *(Elymus truicoides)*	2.7	1.8	4.4	2.9	6.9	4.6	11	7.4	19	13
Cowpea *(forage)* *(Vigna unguiculata)*	2.5	1.7	3.4	2.3	4.8	3.2	7.1	4.8	12	7.8
Trefoil, big *(Lotus uliginosus)*	2.3	1.5	2.8	1.9	3.6	2.4	4.9	3.3	7.6	5.0
Sesbania *(Sesbania exaltata)*	2.3	1.5	3.7	2.5	5.9	3.9	9.4	6.3	17	11
Sphaerophysa *(Sphaerophysa salsula)*	2.2	1.5	3.6	2.4	5.8	3.8	9.3	6.2	16	11
Alfalfa *(Medicago sativa)*	2.0	1.3	3.4	2.2	5.4	3.6	8.8	5.9	16	10
Lovegrass *(Eragrostis sp.)* (9)	2.0	1.3	3.2	2.1	5.0	3.3	8.0	5.3	14	9.3
Corn *(forage)* *(maize)* *(Zea mays)*	1.8	1.2	3.2	2.1	5.2	3.5	8.6	5.7	15	10
Clover, berseem *(Trifolium alexundrinum)*	1.5	1.0	3.2	2.2	5.9	3.9	10	6.8	19	13
Orchard grass *(Dactylis glomerata)*	1.5	1.0	3.1	2.1	5.5	3.7	9.6	6.4	18	12
Foxtail, meadow *(Alopecurus pratenis)*	1.5	1.0	2.5	1.7	4.1	2.7	6.7	4.5	12	7.9
Clover, red *(Trifolium pratense)*	1.5	1.0	2.3	1.6	3.6	2.4	5.7	3.8	9.8	6.6
Clover, alsika *(Trifolium hybridum)*	1.5	1.0	2.3	1.6	3.6	2.4	5.7	3.8	9.8	6.6
Clover, ladino *(Trifolium repens)*	1.5	1.0	2.3	1.6	3.6	2.4	5.7	3.8	9.8	6.6
Clover, strawberry *(Trifolium fragiferum)*	1.5	1.0	2.3	1.6	3.6	2.4	5.7	3.8	9.8	6.6
_Fruit crops (10)										
Date palm *(Phoenix dactylifera)*	4.0	2.7	6.8	4.5	11	7.3	18	12	32	21
Grapefruit *(Citrus paradisi)* (11)	1.8	1.2	2.4	1.6	3.4	2.2	4.9	3.3	8.0	5.4
Orange *(Citrus sinensis)*	1.7	1.1	2.3	1.6	3.3	2.2	4.8	3.2	8.0	5.3
Peach *(Prunus persica)*	1.7	1.1	2.2	1.5	2.9	1.9	4.1	2.7	6.5	4.3
Apricot *(Prunus armeniaca)* (11)	1.6	1.1	2.0	1.3	2.6	1.8	3.7	2.5	5.8	3.8
Grape *(Vitus sp.)* (11)	1.5	1.0	2.5	1.7	4.1	2.7	6.7	4.5	12	7.9
Almond *(Prunus dulcis)* (11)	1.5	1.0	2.0	1.4	2.8	1.9	4.1	2.8	6.8	4.5
Plum, prune *(Prunus domestica)* (11)	1.5	1.0	2.1	1.4	2.9	1.9	4.3	2.9	7.1	4.7
Blackberry *(Rubus sp.)*	1.5	1.0	2.0	1.3	2.6	1.8	3.8	2.5	6.0	4.0
Boysenberry *(Rubus ursinus)*	1.5	1.0	2.0	1.3	2.6	1.8	3.8	2.5	6.0	4.0
Strawberry *(Fragaria sp.)*	1.0	0.7	1.3	0.9	1.8	1.2	2.5	1.7	4.0	2.7

(1) Adapted from Maas and Hottman (1977) and Maas (1984). These data should only serve as a guide to relative tolerances among crops. Absolute tolerances vary depending upon climate, soil conditions and cultural practices. In gypsitcrous soils, plants will tolerate about 2ds/m higher soil salinity (ECe) than indicated but the water salinity (ECw) will remain the same as shown in this tabel.

(2) ECe means average root zone salinity as measured by electrical conductivity of the saturation extract of the soil, reported in decisiemens per meter (ds/m) at 25C. ECw means electical conductivity of the irrigation water in deci Siemens per meter (ds/m). The relationship between soil salinity and water salinity (ECe=1.5 ECw) assumes a 15-20 leaching fraction and a 40-30-20-10% water use pattern for the upper to lower quarters of the root zone.

(3) The zero yield potential or maximum ECe indicates the theoretical soil salinity (ECe) at which crop growth ceases.

(4) Barley and wheat are less tolerant during germination and seedling stage : ECe should not exceed 4 - 5 dS/m in the upper soil during this period.

(5) Beets are more sensitive during germination : ECe should not exceed 3 ds/m in the seedling area for garden beets and sugar beets.

(6) Semi-dwart, short cultivars may be less tolerant.

(7) Tolerance given is an average of several varieties : Suwannce and Coastal Bermuda grass are about 20% more tolerant, while common and Greenfield Bermuda grass are about 20% less tolerant.

(8) Broadleaf Birdsfoot Trefoil seems less tolerant than Narrowleaf Birdsfoot Trefoil.

(9) Tolerance given is an average for boer. Wilman, Sand and Weeping Lovegrass ; Lehman Lovegrass seems about 50% more tolerant.

(10) These data are applicable when rootstocks are used that do not accumulate Na^+ and Cl^- rapidly or when these ions do not predominate in the soil.

(11) Tolerance evaluation is based on tree growth and not on yeild.

Source: FAO Guidelines, R.S. Ayers & D.W. Westcot (1985).

Table E-13
Summary of requirements of Jordanian Standard 893/1994 for treated domestic wastewater.

Parameter	Maximum allowable limit (mg/L)*	
	Disposed to wadis, rivers, surface water bodies, and groundwater recharge	Reuse for irrigation
pH	6.5-9	6.5-9
Temperature change (C°)	<3	-
D.O	≥1	-
TDS	3000	2000 (1)
TSS	50(3) / 200(4)	100 (1)
BOD5	50(3) / 50(4)	-
COD	150(3) / 150(4)	-
NH3	30	-
FOG	15	15
ABS	6	-
Cl2	0.5 (5)	-
Phenol	0.5	-
TFCC MPN/100mL	<1000	<1000 (6)
Intestinal nematodes	<1	<1 (6)

* All units are in mg/L except where noted.
(1) Depends on degree of restriction (none, slight to moderate, or severe).
(2) Depends on method of irrigation.
(3) Conventional wastewater treatment plants.
(4) Waste stabilization ponds.
(5) This is a minimum limit of residual chlorine and it should be linked with total faecal coliform count.
(6) FAO and WHO guidelines and their amendments should be taken into consideration.

Table E-14

Summary of Jordanian Regulations Governing Discharge of Industrial and Commercial Wastewater Into the Sanitary Sewer System.*

Parameter	Unit	Maximum Allowable Limit
pH	Su	5.5-9.5
BOD	mg/l	800
COD	mg/l	2100
TSS	mg/l	1100
P	mg/l	50
FOG	mg/l	50
MBAS	mg/l	26
Phenol	mg/l	10
Cr**	mg/l	5
Cu**	mg/l	4.5
Zn**	mg/l	15
Sn	mg/l	10
Be	mg/l	5
Ni**	mg/l	4
Cd**	mg/l	1
As	mg/l	5
Ba	mg/l	10
Pb**	mg/l	0.6
Mn	mg/l	10
Ag**	mg/l	1
B	mg/l	5
Hg**	mg/l	0.5
Fe	mg/l	50
S (as H_2S)	mg/l	10
Temp	°C	65
Chlorinated Solvents	mg/l	0

* Published in the Official Gazette, September 17, 1988

** The total concentration of all the double asterisked materials should not exceed 10 mg/l

It is not permitted to dispose any liquids or materials which have cyanides in a concentration which can produce 1 mg/l HCN or more

It is not permitted to dispose any radioactive material without written approval from WAJ.

APPLICABLE REGULATORY CRITERIA

Current Status of Environmental Regulations in Jordan:

In order to assess the Yeast Industry Company (YIC) compliance with applicable Jordanian standards and regulations, it is of importance at this stage to present an overview of Jordan's environmental protection control laws, standards, and regulations. Interestingly, Jordan has no comprehensive law to control water, air, and soil pollution. However, a Jordanian Environment Act (JEA) was drafted two years ago to achieve the principle objectives mentioned in the National Environment Strategy (NES) for Jordan. JEA is currently awaiting approval from the Parliament.

In general, the nature of water pollution standards and regulations in Jordan vary according to sources. Industrial wastewater discharges are regulated by the Jordanian Standard Specification number 202 (Table D-1) adopted in 1981 by the Department of Standards and Specifications (DSS) and revised in 1990. Standard 202 regulates industrial wastewater discharges to rivers, wadis, groundwater, the sea, and reuse for irrigation. This standard covers 37 pollutant parameters and sets maximum allowable concentration limits of pollutants in the discharged industrial wastewater effluents. Moreover, the standard also contains narrative conditions to protect public health, aquatic life, worker health; and groundwater quality. The standard is not associated with a permitting mechanism and therefore is self-implementing.

Drinking water quality is regulated by the Jordanian standard number 286. Tables D-2a - D-2e present quantitative requirements of pertinent characteristics including physical, chemical, radiation, and health related issues. With regards to regulations related to the quality of treated domestic wastewater to be reused in irrigation, Jordan has neither standards nor

guidelines. However, it is a common practice to use the Food and Agriculture Organization (FAO) and World Health Organization (WHO) Guidelines as a reference.

Tables D-3 through D-5 are related to the quality of treated domestic wastewater effluents to be reused in irrigating agricultural crops. The remaining Tables D-6 - D-12 present the tolerance and sensitivity of crops to salinity and other specific ions like Sodium, Boron and Chloride. These are adapted from the FAO Guidelines (1985). Treated domestic wastewater is regulated by the Jordanian Standard 893 (Table D-13) adopted in 1994 by DSS. Regarding air pollution, Jordan does not have any existing standards or regulations to control air pollution.

Regulations Applicable to the YIC Discharges:

Industrial wastewater produced by the YIC consists of wastewater generated from yeast separation, filter press and rotary vacuum filter effluents, tank washing, floor washing softener regeneration, floor and equipment washing, laboratory and sanitary. All of these wastewater streams except sanitary are utilized in land application irrigating a nearby forest, therefore the Jordanian standard 202 for industrial discharges to wadis, sea, or reuse for irrigation would apply.

Table D -1

Summary of requirements of Jordan Standard 202/1991 for disposal of industrial effluents.

Parameter	Maximum Allowable Limit, (mg/l)+			
	Disposal To			
	Wadis & Rivers	Sea	Groundwater Recharge	Reuse for Irrigation**
BOD5	50M	-	50M	-
COD	150M	200	150M	-
DO	1*	5*	1*	1*
TDS	3000(1)	-	1500 (1)	2000 (2)
TSS	50	-	-	100 (3)
pH (su)	6.5-9.0	5.5-9.0	6.5-9.0	6.5-8.4
Color (unit)	15	75	15	-
TC	-	4	-	-
FOG	5	10	Absent	5
Phenol	0.002	1	0.002	0.002
MBAS	25		15	-
NO3-N	12 (4)	-	12 (4)	30
NH3	5	12	5	5
T-N	-	125	-	50
PO4-P	15	-	-	-
Cl	500	-	500	350 (3)
SO4	500	-	500	400
F	1.5	-	1.5	-
HCO3	-	-	-	500
Na	-	-	400	-
Mg	-	-	-	-
Ca	-	-	-	-
SAR	-	-	-	9
Al	5	-	0.3	5
As	0.05	0.1	0.05	0.1
B	1	-	1	1 (5)
Cr	0.1	0.3	0.05	0.1
Cu	2	0.1	2	0.2
Fe	1	2	1	5
Mn	0.2	0.2	0.2	0.2
Ni	0.2	0.02	0.1	0.2
Pb	0.1	0.1	0.1	1
Se	0.02	0.02	0.05	0.02
Cd	0.01	0.07	0.02	0.01
Zn	15	-	15	2
CN	0.1	1	0.1	0.1
Hg	0.001	0.001	0.001	0.001
TCC MPN/100ml		5000	-	-
TFCC MPN/100ml	1000(6)	-	1000 (6)	1000 (6)
Nematodes	< 1	-	-	< 1

+) All units are in mg/l except where noted.
*) Minimum value.
**) Depends upon, type and quantity of crops, irrigation methods,soil type, climate & groundwater in the area concerned.
-) Undetermined.
M) Monthly average.

Notes:
1) TDS allowable limit is subject to the TDS concentration in the water supply and the water basin affectd.
2) Allowable limits of wastewater reuse determine the degree of restriction (none, slight to moderate, or severe).
3) Method of irrigation is determined by wastewater quality being used.
4) Nitrate concentrations allowed are determined by its concentrations in the affected water basin.
5) Could reach 3 mg/l.
6) Geometric mean.

Table D -2a

Jordanian Drinking Water Standards
A: Physical characterstics

Parameter	Permissible Limit	Max. allowable conc. in case no better source is available
Taste	aesthetically acceptable	-
Odor	aesthetically acceptable	-
Color	10 units	15 units
Turbidity	1 unit (JCU)	5 units
pH	$6.5 < pH < 9$	-
Temperature	8 - 25 c	-

Table D -2b

Jordanian Drinking Water Standards

B: Chemical Charecterstics

Parameter	Max. Allowable Conc. mg/l
Pb	0.05
Se	0.01
As	0.05
Cr	0.05
CN	0.1
Cd	0.005
Hg	0.001
Sb	0.01
Ag	0.01

Table D -2c

Jordanian Drinking Water Standards
C: Health related

Parameter	Permissible Limit mg/l	Max. allowable conc. in case no better source is avialable	Effects within max. allowable limits
TDS	500	1500	aesthetic
TH(CaCO3)	100	500	aesthetic
ABS	0.5	1	indicator
Al	0.2	0.3	aesthetic
Fe	0.3	1	aesthetic
Mn	0.1	0.2	aesthetic
Cu	1	1.5	aesthetic
Zn	5	15	aesthetic
Na	200	400	aesthetic
Ni	0.05	0.1	health
Cl	200	500	aesthetic
F	1	1.5	health
SO4	200	500	aesthetic
NO3	45	70	health

Table D -2d

Jordanian Drinking Water Standards
D: Radiation

Parameter	Maximum limit Bq/l
Alpha-emitters (except for Radon)	0.1
Beta-emitters	1

Table D -2e

Jordanian Drinking Water Standards
E: Organic pollutants*

Parameter	Max. Permissible Conc. mg/l
A) Chlorinted Hydrocarbons	
Endrin	0.0002
Lindane	0.004
Methoxychlor	0.1
Toxaphene	0.005
B) Chlorophenoxys	
2,4-D	0.1
2,4,5-TP (Trichlorophenoxy propionic acid)	0.01

* Other organic pollutants should not exceed the max. allowable limit set by WHO.

Table D -3

Guidelines for interpretations of water quality for irrigation (1)

Potential irrigation problems	Units	Degree of restriction on use: None	Slight to moderate	Severe
Salinity (affects crop water availability) (2)				
EC_w (or)	dS/m	< 0.7	0.7 - 3.0	> 3.0
TDS	mg/l	< 450	450 - 2000	> 2000
Infiltration (affects infiltration rate of water into the soil. Evaluate using (EC_w and SAR together) (3)				
SAR = 0-3 and EC_w	=	> 0.7	0.7 - 0.2	< 0.2
= 3-6	=	> 1.2	1.2 - 0.3	< 0.3
= 6-12	=	> 1.9	1.9 - 0.5	< 0.5
= 12-20	=	> 2.9	2.9 - 1.3	< 1.3
= 20-40	=	> 5.0	5.0 - 2.9	< 2.9
Specific ion toxicity (affects sensitive crops)				
Sodium (Na) (4)				
Surface irrigation	SAR	< 3	3 - 9	> 9
Sprinkler irrigation	me/l	< 3	> 3	
Chloride (Cl) (4)				
Surface irrigation	me/l	< 4	4 - 10	> 10
Sprinkler irrigation	me/l	< 3	> 3	
Boron (B) (5)	mg/l	< 0.7	0.7 - 3.0	> 3.0
Trace elements(see table E4)				
Miscellaneous effects (affects susceptible crops)				
Nitrogen (NO3-N) (6)	mg/l	<5	5 - 30	> 30
Bicarbonate (HCO3) (Overhead sprinkling only)	me/l	< 1.5	1.5 - 8.5	> 8.5
pH			Normal range 6.5 - 8.4	

(1) Adapted from University of California Committee of Consultants 1974

(2) ECw means electrical conductivity, a measure of the water salinity, reported in deciSiemens per metre at 25C° (dS/m) or in units millimhos per centimeter (mmho/cm). Both are equivalent. TDS means total dissolved solids, reported in milligrams per liter (mg/L).

(3) SAR means sodium adsorpuon ratio. SAR is sometimes reported by the symbol RNa. At a given SAR, infiltration rate increase as water salinity increases. Evaluate the potential infiltration problem by SAR as modified by ECw.

(4) For surface irrigation, most tree crops and woody plants are sensitive to sodium and chloride; use the values shown. Most annual crops are not sensitive. With overhead sprinkle irrigation and low humidity (<30 percent), sodium and chloride may be absorbed through the leaves of sensitive crops.

(5) For borm tolerances, see Tables 16 and 17

(6) NO3-N means nitrate nitrogen reported in terms of elemental nitrogen (NH4-N and Organic-N should be included when wastewater is being tested).

Assumptions in the Guidelines

The water quality guidelines in Table 1 are intended to cover the wide range of conditions encountered in irrigated agriculture. Several basic assumptions have been used to define their range of usability. If the water is used under greatly different conditions, the guidelines may need to be adjusted. Wide deveations from the assumptions might result in wrong judgements on the usability of a particular water supply, especially if it is a borderline case. Where sufficient experience, field trials, research or observations are available, the guidelines may be modified to fit local conditions more closely.

The basic assumptions in the guidelines are:

Yield Potential: Full production capability of all crops, without the use of special practices, is assumed when the guidelines indicate no restrictions on use. A "restriction on use" indicates that there many be a limitation in choice of crop, or special management may be needed to maintain full production capability. A "restriction on use" does not indicate that the water is unsuitable for use.

Site Conditions: Soil texture ranges from sandy-loam to clay-loam with good internal drainage. The climate is semi-arid to arid and rainfall is low. Rainfall does not play a significant role in meeting crop water demand or leaching requirement. (In a monsoon climate or areas where precipitation is high for part or all of the year, the guideline restrictions are too severe. Under the higher rainfall situations, infiltrated water from rainfall is effective in meeting all or part of the leaching requirement.) Drainage is assumed to be good, with no uncontrolled shallow water table present within 2 metres of the surface.

Methods and Timing of Irrigations: Normal surface or sprinkler irrigation methods are used. Water s applied infrequently, as needed, and the crop utilizes a considerable portion of the available stored soil-water (50 percent or more) before the next irrigation. At least 15 percent of the applied water percolates below the root zone (leaching fraction [LF] ≥ 15 percent). The guidelines are too restrictive for specialized irrigation methods, such as localized drip irrigation, which results in near daily or frequent irrigations, but are applicable for subsurface irrigation if surface applied leaching satisfies the leaching requirements.

Water Uptake by Crops: Different crops have different water uptake patterns, but all take water from wherever it is most readily available within the rooting depth. On average about 40 percent is assumed to be taken from the upper quarter of the rooting depth, 30 percent quarter, 20 percent from the third quarter, and 10 percent from the lowest quarter. Each irrigation leaches the upper root zone and maintains it at a relatively low salinity. Salinity increases with depth and is greatest in the lower part of the root zone. The average salinity of the soil-water is three times that of the applied water and is representative of the average root zone salinity to which the crop responds. These conditions result from a leaching fraction of 15-20 percent and irrigations that are timed to keep the crop adequately watered at all times.

Salts leached from the upper root zone accumulate to some extent in the lower part but a salt balance is achieved as salts are moved below the root zone by sufficient leaching. The higher salinity in the lower root zone becomes less important if adequate moisture is maintained in the upper, "more active" part of the root zone and long-term leaching is accomplished.

Restriction on Use: The "Restriction on Use" shown in Table 1 is divided into three degrees of severity: none, slight to moderate, and severe. The divisions are somewhat arbitrary since change occurs gradually and there is no clear-cut breaking point. A change of 10 to 20 percent above or below a guideline value has little significance if considered in proper perspective with other factors affecting yield. Field studies, research trials and observations have led to these divisions, but management skill of the water user can alter them. Values shown are applicable under normal field conditions prevailing in most irrigated areas in the arid and semi-arid regions of the world.

Table D -4

Recommended maximum concentrations of trace elements in irrigation water (1)

Element	Recommended maximum concentration(2) (mg/L)	Remarks
Al (aluminium)	5.0	Can cause non-productivity in acid soils (pH < 5.5), but more alkaline soils at pH > 7.0 will precipitate the ion and eliminate any toxicity.
As (arsenic)	0.10	Toxicity to plants varies widely, ranging from 12 mg/L for Sudan grass to less than 0.05 mg/L for rice.
Be (beryllium)	0.10	Toxicity to plants varies widly, raning from 5 mg/L for kale to 0.5 mg/L for bush beans.
Cd (cadmium)	0.01	Toxic to beans beets and turnips at concentrations as low as 0.1 mg/L in nutrient solutions. Conservative limits recommended due to its potential for accumulation in plants and soils to concentrations that may be harmful to humans
Co (cobalt)	0.05	Toxic to tomato plants at 0.1 mg/L in nutrient solution. Tends to be inactivated by neutral and alkaline soils.
Cr (chromium)	0.10	Not generally recognized as an essential growth element. Conservative limits recommended due to lack of knowledge on its toxicity to plants.
Cu (copper)	0.20	Toxic to a number of plants at 0.1-1.0 mg/L in nutrient solutions.
F (fluoride)	1.0	Inactivated by neutral and alkaline soils.
Fe (iron)	5.0	Not toxic to plants in aerated soils, but can contribute to soil acidification and loss of availability of essential phosphorus and molybdenum. Overhead sprinkling may result in unsightly deposits on plants, equipment and buildings.
Li (lithium)	2.5	Tolerated by most crops to 5 mg/L, mobile in soil. Toxic to citrus at low concentrations (<0.075 mg/L). Acts similarly to boron.
Mn (manganeses)	0.20	Toxic to a number of crops at a few-tenths to a few mg/L, but usually only in acid soils.
Mo (molybdenum	0.01	Not toxic to plants at normal concentrations in siol and water. Can be toxic to livestock if forage is grown in siols with high concentrations of available molybdenum.
Ni (nickel)	0.20	Toxic to a number of plants at 0.5-1.0mg/L; reduced toxicity at neutral or alkaline pH.
Pd (lead)	5.0	Can inhibit plant cell growth at very high concentrations.
Se (selenium)	0.02	Toxic to plants at concentrations as low as 0.025 mg/L and toxic to livestock if forage is grown in soils with relatively high levels of added selenium. An essential element to animals but in very low concentrations.
Sn (tin)		
Ti (titanium)		Effectively excluded by plants; specific tolerance unknown.
W (tungsten)		
V (vanadium)	0.1	Toxic to many plants at relatively low concentrations.
Zn (zinc)	2.0	Toxic to many plants atwidely varying concentrations, reduced toxicity at pH > 6.0 and in fine textured or organic soils.

1- Adapted from National Academy of Sciences (1972) and Pratt (1972).
2- The maximum concentration is based on a water application rate which is consistent with good irrigation practices (10000 m3/ha per years). If the water application rate greatly exceeds this, the maximum concentrations should be adjusted downward accordingly. No adjustment should be made for application rates lease than 10 000 m3/ha per year. The values given are for water used on a continuous basis at one site.

Source: FAO Guidelines, R.S. Ayers & D.w. Westcot (1985).

Table D -5

Recommended microbiological quality guidelines for wastewater use in agriculture (a)

Category	Reuse conditions	Exposed group	Intestinal nematodes (b) (arithmetic mean no. of eggs per litre (c))	Faecal coliforms (geometric mean no. per 100ml) (c)	Wastewater treatment expected to achieve the required microbiological quality
A	Irrigation of crops likely to be eaten uncooked. sports fields, public parks, (d)	Workers, Consumer, public	<1	< 1000 (d)	A series of stabilization ponds designed to achieve the microbiological quality indicated, or equivalent treatment
B	Irrigation of cereal crops, industrial crops, fodder crops, Pasture and trees (e)	Workers	<1	No standard recommended	Retention in stabilization ponds for 8-10 days or equivalent helminth and faecal coliform removal
C	Localized irrigation of crops in category B if exposure of workers and the public does not occur	None	Not applicable	Not applicable	Pretreatment as required by the irrigation technology, but not less than primary sedimentation.

(a) In specific cases, local epidemiological, sociocultural and environmental factors should be taken into account, and the guidelines modified accordingly

(b) Ascaris and Trichuris species and hookworms

(c) During the irrigation period.

(d) A more stringent guideline (< 200 faecal coliforms per 100 ml) is appropriate for public lawns, such as hotel lawns. With which the public may come into direct contact

(e) In the case of fruit trees, irrigation should cease two weeks before fruit is picked, and no fruit should be picked off the ground. Sprinkler irrigation should not be used.

Source: Scientific group on health aspects of use of treated wastewater for agricultural and aquaculture-W H O Geneva 18-23 Nov. 1987.

Table D -6

Chloride tolerance of some fruit crop cultivars and rootstocks.(a)

Crop	Rootstock or cultivar	Maximum permissible Cl in water without leaf injury (b),(c) (mg/L)
	Rootstocks	
Avocado (Persea americana)	West indian	180
	Guatemalan	145
	Mexican	110
Citrus (Citrus spp.)	Sunki mandarin, grapefruit	
	Cleopatra mandarin, Rangpur lime	600
	Sampson tangelo, rough lemon, sour orange, Ponkan mandarin	355
	Citrumelo 4475, trifolate orange, Cuban shaddock, Calamondin, Sweet orange, Savage citrange, Rusk citrange, Troyer citrange	250
Grape (Vitis spp.)	Salt Creek, 1613-3	960
	Dog ridge	710
Stone fruit (Prunus spp.)	Marianna	600
	Lovell, Shalil	250
	Yunnan	180
	Cultivars	
Berries (Rubus spp.)	Boysenberry	250
	Olallie blackberry	250
	Indian Summer raspberry	110
Grape (vitis spp.)	Thompson seedless, Perlette	460
	Cardinal, black rose	250
Strawberry (Fragaria spp.)	Lassen	180
	Shasta	110

(a) Data are adapted from Haas (13)

(b) For some crops, the concentrations given may exceed the overall salinity tolerance of that crop and cause some yield reduction before chloride ion toxicities. Values given are for the maximum concentration in the irrigation water. The values were derived from saturation extract data (ECe) by the following relationship : saturation extraction concentration = 1.5 water concentration.

(c) The maximum permissible values apply only to surface irrigated crops. Sprinkler irrigation may cause excessive leaf burn at values far below these, (see Table 3-10).

Source : FAO Guidelines, R.S. Ayers & D.W. Westcot (1985).

Table D -7

GUIDLINES FOR INTERPRETING LABORATORY DATA ON WATER SUITABILITY FOR GRAPES

Potential Irrigation Problem	Unita	Degree of Restriction on Use		
		None	Slight to Moderate	Severe2
Salinity [3] *(affects water availability to crops)*				
ECw	dS/m	< 1	1.0 - 2.7	> 2.7
Toxicity *(Specific ions which affect growth of crop)*				
Sodium (Na^+)[4]	me/l	< 20	-	-
Chloride (Cl^-)[4]	me/l	< 4	4 - 15	> 15
Boron (B)	mg/l	< 1	1 - 3	> 3
Miscellaneous				
Bicarbonate ($HCO3^-$)[5]	me/l	< 1.5	1.5 - 7.5	> 7.5
Nitrate-nitrogen (NO3-N)	mg/l	< 5	5 - 30	> 30

1. Adapted from Neja et al. 1978.
2. Special management practices and favorable soil conditions are required for successful production.
3. Assumes that rainfall and extra water applied owing to inefficiencies of normal irrigation will supply the crop need plus about 15 percent extra for salinity control.
4. With overhead sprinkler irrigation, sodium or chloride in excess of 3 me/l under extreme drying conditions may result in excessive leaf absorption, leaf burn and crop damage. If overhead sprinklers are used for cooling by frequent on-off cycling, damage may occur even at lower concentrations.
5. Bicarbonate (HCO3) in water applied by overhead sprinklers may cause white deposits on fruit and leaves which reduces market acceptability, but is not toxic to the plant.

Table D -8

PELATIVE SALT TOLERANCE OF VARIOUS CROPS AT GERMINATION[1]

Crop		50 percent Emergence reduction (ECe in dS/m)
Barley	*(Hordeum vulgare)*	16 - 24
Cotton	*(Gossypium hirsutum)*	15.5
Sugarbeet	*(Beta vulgaris)*	6 - 12.5
Sorghum	*(Sorghum bicolor)*	13
Safflower	*(Carthomus tinctorius)*	12.3
Wheat	*(Triticum aestivum)*	14 - 16
Beet, red	*(Beta vulgaris)*	13.8
Alfalfa	*(Medicago sativa)*	8.2 - 13.4
Tomato	*(Lycopersicon Lycopersicum)*	7.6
Rice	*(Oryza sativa)*	18
Cabbage	*(Brassica oleracea capitata)*	13
Muskmelon	*(Cucumis melo)*	10.4
Maize	*(Zea mays)*	21 - 24
Lettuce	*(Lactuca sativa)*	11.4
Onion	*(Allium cepa)*	5.6 - 7.5
Bean	*(Phaseolus vulgaris)*	8.0

Table D -9

Relative boron tolerance of agricultural crops (1), (2)

Very Sensitive (<0.5 mg/L)

Lemon	*Citrus Limon*
Blackberry	*Rubus spp.*

Sensitive (0.5-0.75 mg/L)

Avocado	*Persea americana*
Grapefruit	*Citrus X paradisi*
Orange	*Citrus sinensis*
Apricot	*Prunus armeniaca*
Peach	*Prunus persica*
Cherry	*Prunus avium*
Plum	*Prunus domestica*
Persimmon	*Diospyros Kaki*
Fig, Kadota	*Ficus carica*
Grape	*Vitis vinifera*
Walnut	*Juglans regia*
Pecan	*Carya illnoiensis*
Cowpea	*Vigna unguiculata*
Onion	*Allium cepa*

Sensitive (0.75-1.0 mg/L)

Garlic	*Allium sativum*
Sweet potato	*Ipomoea batatas*
Wheat	*Triticum eastivum*
Barley	*Hordeum vulgare*
Sunflower	*Helianthus annaius*
Bean, mung	*Vigna radiata*
Sesame	*Sesamum indicum*
Lupine	*Lupinus hartwegii*
Strawberry	*Fragaria spp.*
Artichoke, Jerusalem	*Helianthus tuberosus*
Bean, Kidney	*Phaseolus vulgaris*
Bean, lima	*Phaseolus lunatus*
Groundnut/Peanut	*Arachis hypogaea*

Moderately Sensitive (1.0-2.0 mg/L)

Pepper, red	*Capsicum crucum*
Pea	*Pisum sativa*
Carrot	*Daucus carota*
Radish	*Raphanus sativus*
Potato	*Solanum tuberosum*
Cucumber	*Cucumis sativus*

Moderately Tolerant (2.0-4.0 mg/L)

Lettuce	*Lactuca sativa*
Cabbage	*Brassica oleracea capitata*
Celery	*Apium graveolens*
Turnip	*Brassica rapa*
Bluegrass, Kentucky	*Poa pratensis*
Oats	*Avena sativa*
Maize	*Zea mays*
Artichoke	*Cynara scolymus*
Tobacco	*Nicotiana tabacum*
Mustard	*Brassica juncea*
Clover, sweet	*Melilotus indica*
Squash	*Cucurbita pepo*
Muskmelon	*Cucumis melo*

Tolerant (4.0-6.0 mg/L)

Sorghum	*Sorghum bicolor*
Tomato	*Lycopersicon Lycopersicum*
Alfalfa	*Medicago sativa*
Vetch, purple	*Vicia benghalensis*
Parsley	*Petroselinum crispum*
Beet, red	*Beta vulgaris*
Sugarbeet	*Beta vulgaris*

Very Tolerant (6.0-15.0 mg/L)

Cotton	*Gossypium hirsutum*
Asparagus	*Asparagus officinalis*

---

(1) Data taken from Maas (1984)

(2) Maximum concentrations tolerated in soil-water without yield or vegetative growth reductions. Boron tolera vary depending upon climate, soil conditions and crop varieties. Maximum concentrations in the irrigation w are approximately equal to these values or slightly less.

Source: FAO Guidelines, R.S. Ayers & D.W. Westcot (1985).

Table D -10

Relative tolerance of selected crops to exchangeable sodium (1).

Sensitive (2)	Semi-tolerant(2)	Tolerant(2)
Avocado	Carrot	Alfalfa
(Persea americana)	*(Daucus carota)*	*(Medicago sativa)*
Deciduous Fruits	Clover, Ladino	Barley
Nuts	*(Trifolium repens)*	*(Hordeum vulgare)*
Bean, green	Dallisgrass	Beet, garden
(Phaseolus vulgaris)	*(Paspalum dilatatum)*	*(Beta vulgaris)*
Cotton *(at germination)*	Fescue, tall	Beet, sugar
(Gossypium hirsutum)	*(Festuca arundinacea)*	*(Beta vulgaris)*
Maize	Lettuce	Bermuda grass
(Zea mays)	*(Lactuca sativa)*	*(Cynodon dactylon)*
Peas	Bajra	Cotton
(Pisum sativum)	*(Pennisetum typhoides)*	*(cossypium hirsutum)*
Grapefruit	Sugarcane	Paragrass
(Citrus paradisi)	*(Saccharum officinarum)*	*(Brachiaria mutica)*
Orange	Berseem	Rhodes grass
(Citrus sinensis)	*(Trifolium alexandrinum)*	*(Chloris gayana)*
Peach	Benji	Wheatgrass, crested
(Prunus persica)	*(Melilotus parviflora)*	*(Agropyron cristatum)*
Tangerine	Raya	Wheatgrass, fairway
(Citrus reticulata)	*(Brassica juncea)*	*(Agropyron cristatum)*
Mung	Oat	Wheatgrass, fairway tall
(Phaseolus aurus)	*(Avena sativa)*	*(Agropyron slongatum)*
Mash	Onion	Karnal grass
(Phaseolus mungo)	*(Allium cepa)*	*(Diplachra fusca)*
Lentil	Radish	
(Lens culinaris)	*(Raphanus sativus)*	
Groundnut *(peanut)*	Rice	
(Arachis hypogaea)	*(Oryza sativus)*	
Cram	Rye	
(Cicer arietirum)	*(Secale cereale)*	
Cowpeas	Ryegrass, Italian	
(Vigna sinensis)	*(Lolium multiflorum)*	
	Sorghum	
	(Sorghum vulgare)	
	Spinach	
	(Spinacia oleracea)	
	Tomato	
	(Lycopersicon esculentum)	
	Vetch	
	(Vicia sativa)	
	Wheat	
	(Triticum vulgare)	

Adapted from data of FAO-Unesco (1973); Pearson (1960); and Abrol (1982).
Source: FAO Guidelines, R.S. Ayers & D.W. Westcot (1985).

Table D -11

LABORATORY DETERMINATIONS NEEDED TO EVALUATE COMMON IRRIGATION WATER QUALITY PROBLEMS

Water parameter	Symbol	Unit[1]	Usual range in irrigation water	
SALINITY				
Salt Content				
Electrical Conductivity	EC_w	dS/m	0 - 3	dS /m
(or)				
Total Dissolved Solids	TDS	mg/l	0 - 2000	mg/l
Cations and Anions				
Calcium	Ca^{++}	me/l	0 - 20	me/l
Magnesium	Mg^{++}	me/l	0 - 5	me/l
Sodium	Na^{+}	me/l	0 - 40	me/l
Carbonate	CO_3^{--}	me/l	0 - .1	me/l
Bicarbonate	HCO_3^{-}	me/l	0 - 10	me/l
Chloride	Cl^{-}	me/l	0 - 30	me/l
Sulphate	SO_4^{--}	me/l	0 - 20	me/l
NUTRIENTS[2]				
Nitrate - Nitrogen	NO_3 - N	mg/l	0 - 10	mg/l
Ammonium - Nitrogen	NH_4 - N	mg/l	0 - 5	mg/l
Phosphate - Phosphorus	PO_4 - P	mg/l	0 - 2	mg/l
Potassium	K^{+}	mg/l	0 - 2	mg/l
MISCELIANEOUS				
Boron	B	mg/l	0 - 2	mg/l
Acid / Basicity	pH	1 - 14	6.0 - 8.5	
Sodium Adsorption Ratio[3]	SAR	$(me/l)^{1.2}$	0 - 15	

1. dS/m = desiSiemen/meter in S.I. units (equivalent to 1 mmho / cm - 1 millimmho / centimeter)
   mg/l = milligram per litre ~ parts per million (ppm).
   me/l = milliequivalent per litre (mg/l ÷ equivalent weight = me/l); in SI units, 1 me/l = 1 millimol / litre adjusted for electron charge.
2. NO_3-N means the laboratory will analyse for NO_3 but will report the NO_3 in terms of chemically equivalent nitrogen. Similarly, for NH_4-N, the laboratory will analyse for NH_4 but report in terms of chemically equivalent elemental nitrogen. The total nitrogen available to the plant will be the sum of the equivalen elemental nitrogen.
   The same reporting method is used for phosphorus.
3. SAR is calculated from the Na, Ca and Mg reported in me/l.

Table D -12

Crop tolerence and yield potential of selected crops as influenced by irrigation water salinity (ECw) or soil salinity (ECe)

	Yield potential (2)									
	100%		90%		75%		50%		0% maximum(3)	
	ECe	ECw	ECe	ECw	ECe	ECw	ECe	ECw	ECe	ECw
Field crops										
Barley *(Hordeum Vulgare)* (4)	8.0	5.3	10	6.7	13	8.7	18	12	28	19
Cotton *(Gossypium hirsutum)*	7.7	5.1	9.6	6.4	13	8.4	17	12	27	18
Sugarbeet *(Beta vulgaris)* (5)	7.0	4.7	8.7	5.8	11	7.5	15	10	24	16
Sorghum *(Sorghum bicolor)*	6.8	4.5	7.4	5.0	8.4	5.6	9.9	6.7	13	8.7
Wheat *(Triticum aestivum)* (4), (6)	6.0	4.0	7.4	4.9	9.5	6.3	13	8.7	20	13
Wheat durum *(Triticum turgidum)*	5.7	3.8	7.6	5.0	10	6.9	15	10	24	16
Soyabean *(Glycine max)*	5.0	3.3	5.5	3.7	6.3	4.2	7.5	5.0	10	6.7
Cowpea *(Vigna unguiculata)*	4.9	3.3	5.7	3.8	7.0	4.7	9.1	6.0	13	8.8
Groundnut *(peanut)* *(Arachis hypogaea)*	3.2	2.1	3.5	2.4	4.1	2.7	4.9	3.3	6.6	4.4
Rice *(paddy)* *(Oriza sativa)*	3.0	2.0	3.8	2.6	5.1	3.4	7.2	4.8	11	7.6
Sugarcane (Saccharum officinarum)	1.7	1.1	3.4	2.3	5.9	4.0	10	6.8	19	12
Corn *(maize)* *(Zea mays)*	1.7	1.1	2.5	1.7	3.8	2.5	5.9	3.9	10	6.7
Flax *(Linum usitatissimum)*	1.7	1.1	2.5	1.7	3.8	2.5	5.9	3.9	10	6.7
Broadbean *(Vicia faba)*	1.5	1.1	2.6	1.8	4.2	2.0	6.8	4.5	12	8.0
Bean *(phaseolus vulgaris)*	1.0	0.7	1.5	1.0	2.3	1.5	3.6	2.4	6.3	4.2
Vegetable crops										
Squash zucchini *(courgette)* *(Cucurbita pepo melopepo)*	4.7	3.1	5.8	3.8	7.4	4.9	10	6.7	15	10
Beet, red *(Beta vulgaris)*(5)	4.0	2.7	5.1	3.4	6.8	4.5	9.6	6.4	15	10
Squash, scallop *(Cucurbita pepo melopepo)*	3.2	2.1	3.8	2.6	4.8	3.2	6.3	4.2	9.4	6.3
Broccoli *(Brassica oleracea botrytis)*	2.8	1.9	3.9	2.6	5.5	3.7	8.2	5.5	14	9.1
Tomato *(Laycopersicon esculentum)*	2.5	1.7	3.5	2.3	5.0	3.4	7.6	5.0	13	8.4
Cucumber *(Cucumis sativus)*	2.5	1.7	3.3	2.2	4.4	2.9	6.3	4.2	10	6.8
Spinach *(Spinacia oleracea)*	2.0	1.3	3.3	2.2	5.[illegible]	3.5	8.6	5.7	15	10
Celery *(Apium graveolens)*	1.8	1.2	3.4	2.3	5.8	3.9	9.9	6.6	18	12
Cabbage *(Brassica oleracea capitata)*	1.8	1.2	2.8	1.9	4.4	2.9	7.0	4.6	12	8.1
Potato *(Solanum tuberosum)*	1.7	1.1	2.5	1.7	3.8	2.5	5.9	3.9	10	6.7
Corn, sweet *(maize)* *(Zea mays)*	1.7	1.1	2.5	1.7	3.8	2.5	5.9	3.9	10	6.7
Sweet potato *(Impomoea batatas)*	1.5	1.0	2.4	1.6	3.8	2.5	6.0	4.0	11	7.1
Pepper *(Capsicum annuum)*	1.5	1.0	2.2	1.5	3.3	2.2	5.1	3.4	8.6	5.8
Lettuce *(Lactuca sativa)*	1.3	0.9	2.1	1.4	3.2	2.1	5.1	3.4	9.0	6.0
Radish *(Raphanus sativus)*	1.2	0.8	2.0	1.3	3.1	2.1	5.0	3.4	8.9	5.9
Onion *(Allium cepa)*	1.2	0.8	1.8	1.2	2.8	1.8	4.3	2.9	7.4	5.0
Carrot *(Daucus carota)*	1.0	0.7	1.7	1.1	2.8	1.9	4.6	3.0	8.1	5.4
Bean *(Phaseolus vulgaris)*	1.0	0.7	1.5	1.0	2.3	1.5	3.6	2.4	6.3	4.2
Turnip *(Phaseolus vulgaris)*	0.9	0.6	2.0	1.3	3.7	2.5	6.5	4.3	12	8.0
Forage crops										
Wheatgrass, tall *(Agropyron elongatum)*	7.5	5.0	9.9	6.6	13	9.0	19	13	31	21
Wheatgrass, fairway crested *(Agropyron cristatum)*	7.5	5.0	9.0	6.0	11	7.4	15	9.8	22	15
Bermuda grass *(Cynodon dactylon)* (7)	6.9	4.6	8.5	5.6	11	7.2	15	9.8	23	15
Barley *(forage)* *(Hordeum vulgare)* (4)	6.0	4.0	7.4	4.9	9.5	6.4	13	8.7	20	13
Ryegrass, perennial *(Lolium perenne)*	5.6	3.7	6.9	4.6	8.9	5.9	12	8.1	19	13
Trefoil, narrowleaf birdsfoot (8) *(Lotus corniculatus tenuifolium)*	5.0	3.3	6.0	4.0	7.5	5.0	10	6.7	15	10

Table D - 12 Continued

	Yield potential									
	100%		90%		75%		50%		0%maximum (3)	
	ECe	ECw	ECe	ECw	ECe	ECw	ECe	ECw	Ece	ECw
Harding grass *(Phalaris tuberosa)*	4.6	3.1	5.9	3.9	7.9	5.3	11	7.4	18	12
Fescue, tall *(Festuca elatior)*	3.9	2.6	5.5	3.6	7.8	5.2	12	7.8	20	13
_Wheatgrass, standard crested *(Agropyron sibiricum)*	3.5	2.3	6.0	4.0	9.8	6.5	16	11	28	19
Vetch, common *(Vicia angustifolia)*	3.0	2.0	3.9	2.6	5.3	3.5	7.6	5.0	12	8.1
Sudan grass *(Sorghum sudanense)*	2.8	1.9	5.1	3.4	8.6	5.7	14	9.6	26	17
Wildrye, beardless *(Elymus truicoides)*	2.7	1.8	4.4	2.9	6.9	4.6	11	7.4	19	13
Cowpea *(forage)* *(Vigna unguiculata)*	2.5	1.7	3.4	2.3	4.8	3.2	7.1	4.8	12	7.8
Trefoil, big *(Lotus uliginosus)*	2.3	1.5	2.8	1.9	3.6	2.4	4.9	3.3	7.6	5.0
Sesbania *(Sesbania exaltata)*	2.3	1.5	3.7	2.5	5.9	3.9	9.4	6.3	17	11
Sphaerophysa *(Sphaerophysa salsula)*	2.2	1.5	3.6	2.4	5.8	3.8	9.3	6.2	16	11
Alfalfa *(Medicago sativa)*	2.0	1.3	3.4	2.2	5.4	3.6	8.8	5.9	16	10
Lovegrass *(Eragrostis sp.)* (9)	2.0	1.3	3.2	2.1	5.0	3.3	8.0	5.3	14	9.3
Corn *(forage)* *(maize)* *(Zea mays)*	1.8	1.2	3.2	2.1	5.2	3.5	8.6	5.7	15	10
Clover, berseem *(Trifolium alexundrinum)*	1.5	1.0	3.2	2.2	5.9	3.9	10	6.8	19	13
Orchard grass *(Dactylis glomerata)*	1.5	1.0	3.1	2.1	5.5	3.7	9.6	6.4	18	12
Foxtail, meadow *(Alopecurus pratenis)*	1.5	1.0	2.5	1.7	4.1	2.7	6.7	4.5	12	7.9
Clover, red *(Trifolium pratense)*	1.5	1.0	2.3	1.6	3.6	2.4	5.7	3.8	9.8	6.6
Clover, alsika *(Trifolium hybridum)*	1.5	1.0	2.3	1.6	3.6	2.4	5.7	3.8	9.8	6.6
Clover, ladino *(Trifolium repens)*	1.5	1.0	2.3	1.6	3.6	2.4	5.7	3.8	9.8	6.6
Clover, strawberry *(Trifolium fragiferum)*	1.5	1.0	2.3	1.6	3.6	2.4	5.7	3.8	9.8	6.6
_Fruit crops (10)										
Date palm *(Phoenix dactylifera)*	4.0	2.7	6.8	4.5	11	7.3	18	12	32	21
Grapefruit *(Citrus paradisi)* (11)	1.8	1.2	2.4	1.6	3.4	2.2	4.9	3.3	8.0	5.4
Orange *(Citrus sinensis)*	1.7	1.1	2.3	1.6	3.3	2.2	4.8	3.2	8.0	5.3
Peach *(Prunus persica)*	1.7	1.1	2.2	1.5	2.9	1.9	4.1	2.7	6.5	4.3
Apricot *(Prunus armeniaca)* (11)	1.6	1.1	2.0	1.3	2.6	1.8	3.7	2.5	5.8	3.8
Grape *(Vitus sp.)* (11)	1.5	1.0	2.5	1.7	4.1	2.7	6.7	4.5	12	7.9
Almond *(Prunus dulcis)* (11)	1.5	1.0	2.0	1.4	2.8	1.9	4.1	2.8	6.8	4.5
Plum, prune *(Prunus domestica)* (11)	1.5	1.0	2.1	1.4	2.9	1.9	4.3	2.9	7.1	4.7
Blackberry *(Rubus sp.)*	1.5	1.0	2.0	1.3	2.6	1.8	3.8	2.5	6.0	4.0
Boysenberry *(Rubus ursinus)*	1.5	1.0	2.0	1.3	2.6	1.8	3.8	2.5	6.0	4.0
Strawberry *(Fragaria sp.)*	1.0	0.7	1.3	0.9	1.8	1.2	2.5	1.7	4.0	2.7

(1) Adapted from Maas and Hoffman (1977) and Maas (1984). These data should only serve as a guide to relative tolerances among crops. Absolute tolerances vary depending upon climate, soil conditions and cultural practices. In gypsiferous soils, plants will tolerate about 2ds/m higher soil salinity (ECe) than indicated but the water salinity (ECw) will remain the same as shown in this label.

(2) ECe means average root zone salinity as measured by electrical conductivity of the saturation extract of the soil, reported in decisiemens per meter (ds/m) at 25C. ECw means electrical conductivity of the irrigation water in deci Siemens per meter (ds/m). The relationship between soil salinity and water salinity (ECe=1.5 ECw) assumes a 15-20 leaching fraction and a 40-30-20-10% water use pattern for the upper to lower quarters of the root zone.

(3) The zero yield potential or maximum ECe indicates the theoretical soil salinity (ECe) at which crop growth ceases.

(4) Barley and wheat are less tolerant during germination and seedling stage : ECe should not exceed 4 - 5 dS/m in the upper soil during this period.

(5) Beets are more sensitive during germination : ECe should not exceed 3 ds/m in the seedling area for garden beets and sugar beets.

(6) Semi-dwarf, short cultivars may be less tolerant.

(7) Tolerance given is an average of several varieties : Suwannee and Coastal Bermuda grass are about 20% more tolerant, while common and Greenfield Bermuda grass are about 20% less tolerant.

(8) Broadleaf Birdsfoot Trefoil seems less tolerant than Narrowleaf Birdsfoot Trefoil.

(9) Tolerance given is an average for boer. Wilman, Sand and Weeping Lovegrass ; Lehman Lovegrass seems about 50% more tolerant.

(10) These data are applicable when rootstocks are used that do not accumulate Na^+ and Cl^- rapidly or when these ions do not predominate in the soil.

(11) Tolerance evaluation is based on tree growth and not on yeild.

Source: FAO Guidelines, R.S. Ayers & D.W. Westcot (1985).

Table D-13
Summary of requirements of Jordanian Standard 893/1994 for treated domestic wastewater.

Parameter	Maximum allowable limit (mg/L)*	
	Disposed to wadis, rivers, surface water bodies, and groundwater recharge	Reuse for irrigation
pH	6.5-9	6.5-9
Temperature change (C)	< 3	-
D.O	31	-
TDS	3000	2000 (1)
TSS	50(3) / 200(4)	100 (1)
BOD5	50(3) / 50(4)	-
COD	150(3) / 150(4)	-
NH3	30	-
FOG	15	15
ABS	6	-
Cl2	0.5 (5)	-
Phenol	0.5	-
TFCC MPN/100mL	< 1000	< 1000 (6)
Intestinal nematodes	< 1	< 1 (6)

* All units are in mg/L except where noted.

(1) Depends on degree of restriction (none, slight to moderate, or severe).

(2) Depends on method of irrigation.

(3) Conventional wastewater treatment plants.

(4) Waste stabilization ponds.

(5) This is a minimum limit of residual chlorine and it should be linked with total faecal coliform count.

(6) FAO and WHO guidelines and their amendments should be taken into consideration.

Table D-14

Summary of Jordanian Regulations Governing Discharge of Industrial and Commercial Wastewater Into the Sanitary Sewer System.*

Parameter	Unit	Maximum Allowable Limit
pH	Su	5.5-9.5
BOD	mg/l	800
COD	mg/l	2100
TSS	mg/l	1100
P	mg/l	50
FOG	mg/l	50
MBAS	mg/l	26
Phenol	mg/l	10
Cr**	mg/l	5
Cu**	mg/l	4.5
Zn**	mg/l	15
Sn	mg/l	10
Be	mg/l	5
Ni**	mg/l	4
Cd**	mg/l	1
As	mg/l	5
Ba	mg/l	10
Pb**	mg/l	0.6
Mn	mg/l	10
Ag**	mg/l	1
B	mg/l	5
Hg**	mg/l	0.5
Fe	mg/l	50
S (as H_2S)	mg/l	10
Temp	°C	65
Chlorinated Solvents	mg/l	0

* Published in the Official Gazette, September 17, 1988

** The total concentration of all the double asterisked materials should not exceed 10 mg/l

It is not permitted to dispose any liquids or materials which have cyanides in a concentration which can produce 1 mg/l HCN or more

It is not permitted to dispose any radioactive material without written approval from WAJ.

YEAST INDUSTRIES COMPANY PHOTOS

AUDIT REPORT
Yeast Industry
Jordan

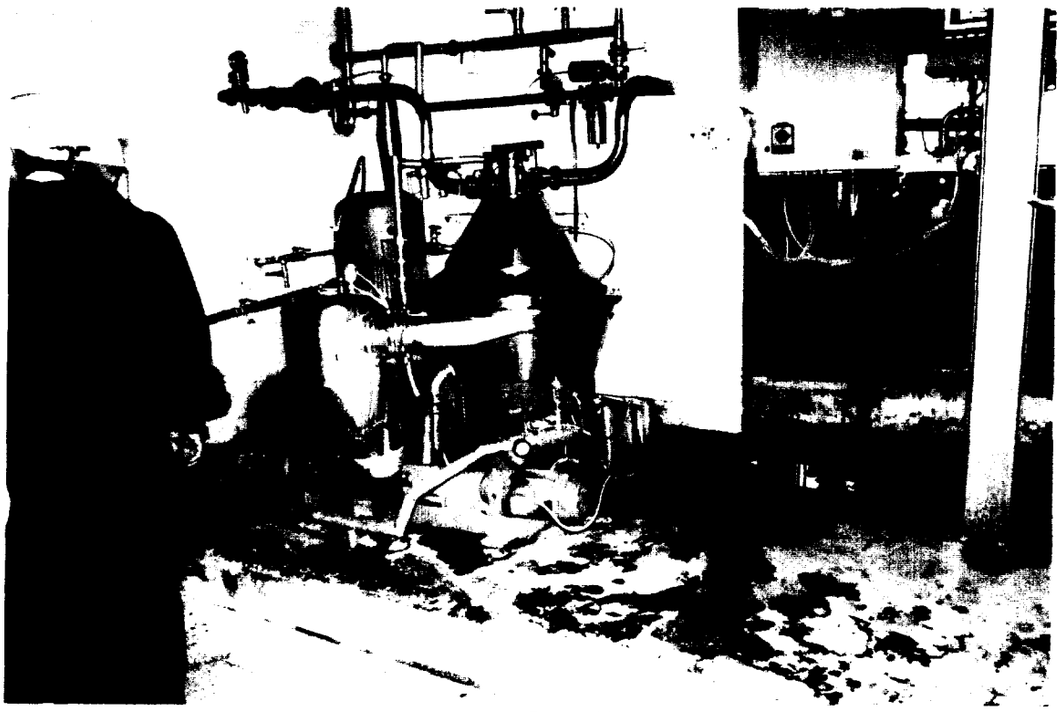

Molasses Centrifuge

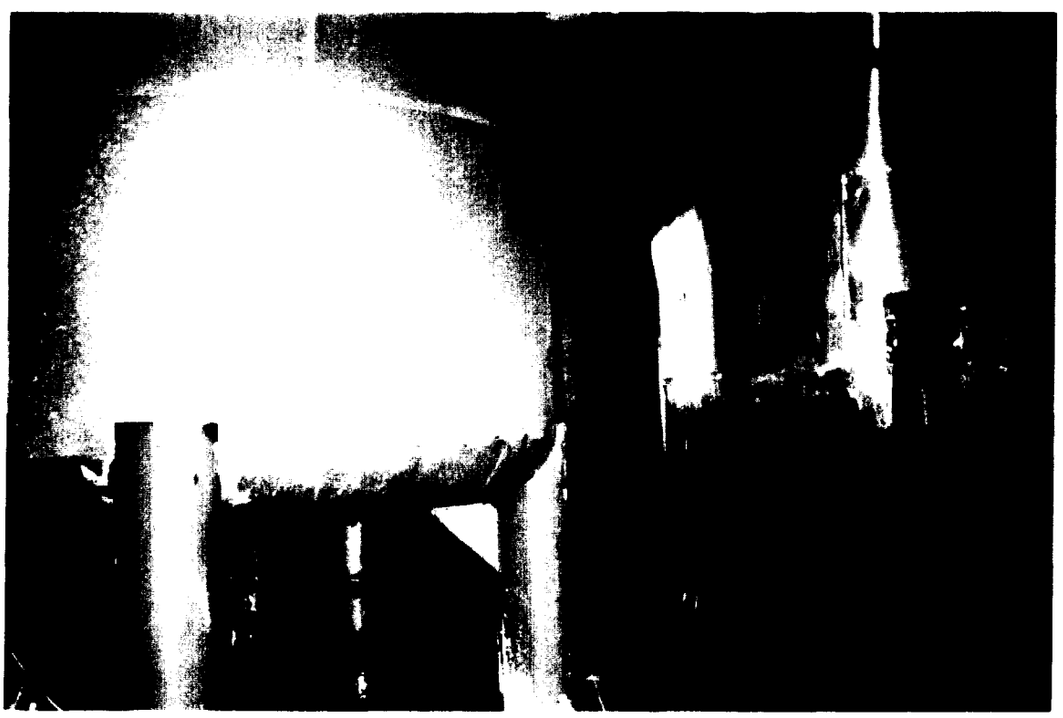

Yeast Cream Storage Tanks

YEAST INDUSTRIES COMPANY PHOTOS

AUDIT REPORT
Yeast Industry
Jordan

Fermentors

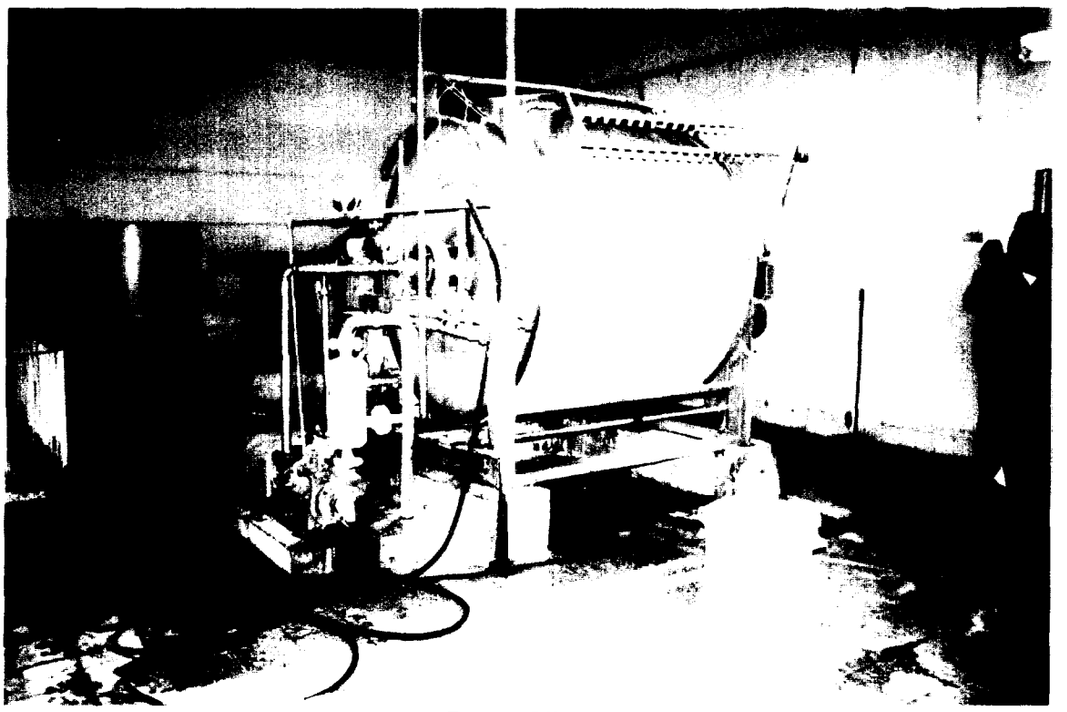

Drum Filter

YEAST INDUSTRIES COMPANY PHOTOS

AUDIT REPORT
Yeast Industry
Jordan

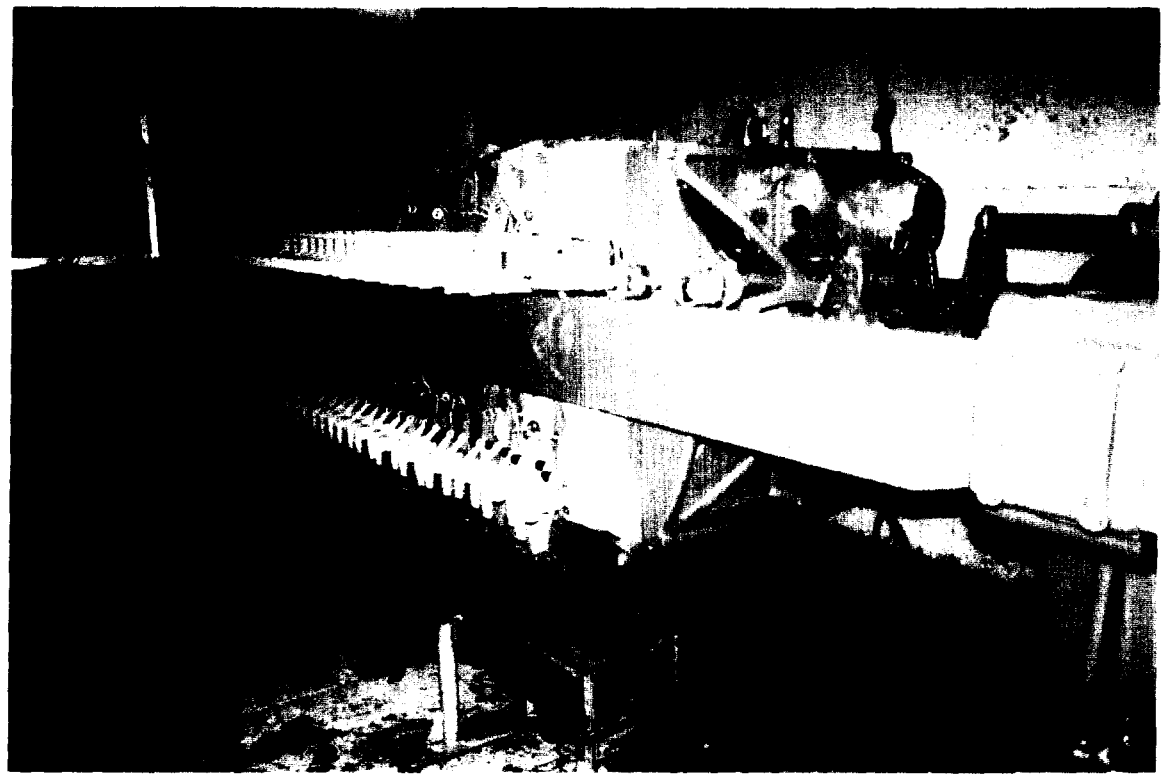

Pressure Filter

Packaging Operations

YEAST INDUSTRIES COMPANY PHOTOS

AUDIT REPORT
Yeast Industry
Jordan

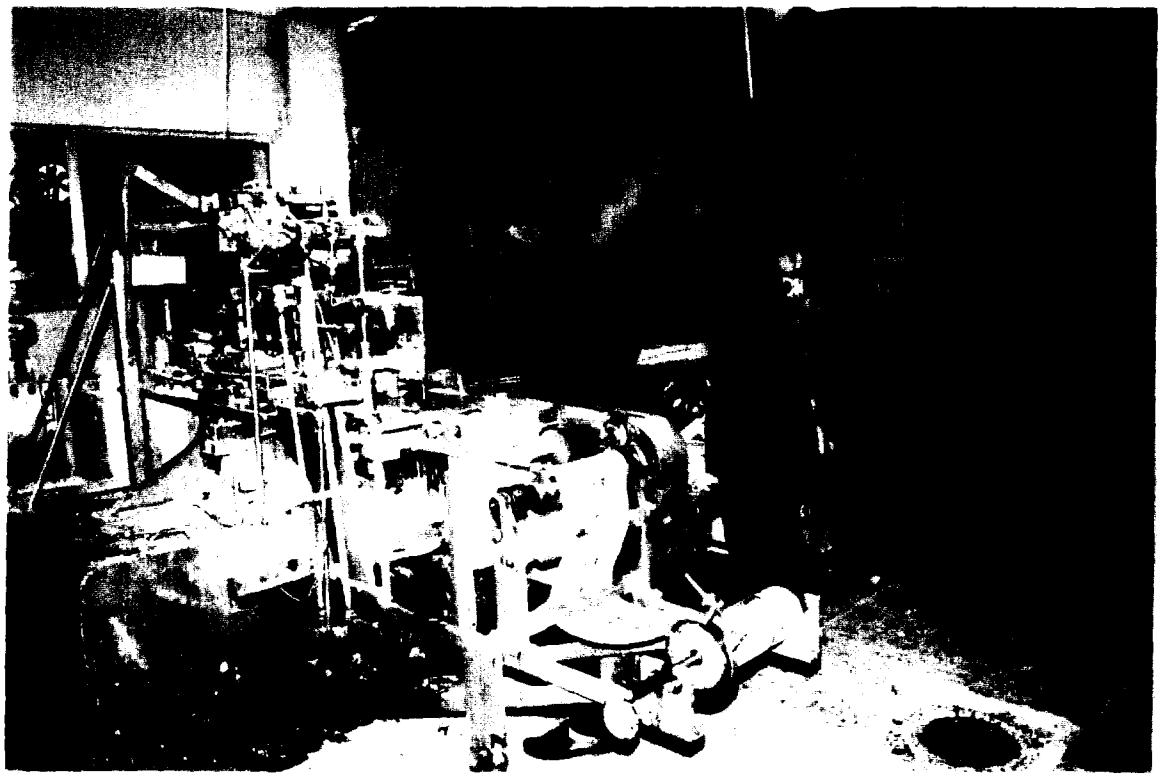

Packaging Operations

Separator # 1 Discharge

YEAST INDUSTRIES COMPANY PHOTOS

AUDIT REPORT
Yeast Industry
Jordan

Equalization Tank

YEAST INDUSTRIES COMPANY PHOTOS

AUDIT REPORT
Yeast Industry
Jordan

Wastewater Surge Tank

Land Farming

YEAST INDUSTRIES COMPANY PHOTOS

AUDIT REPORT
Yeast Industry
Jordan

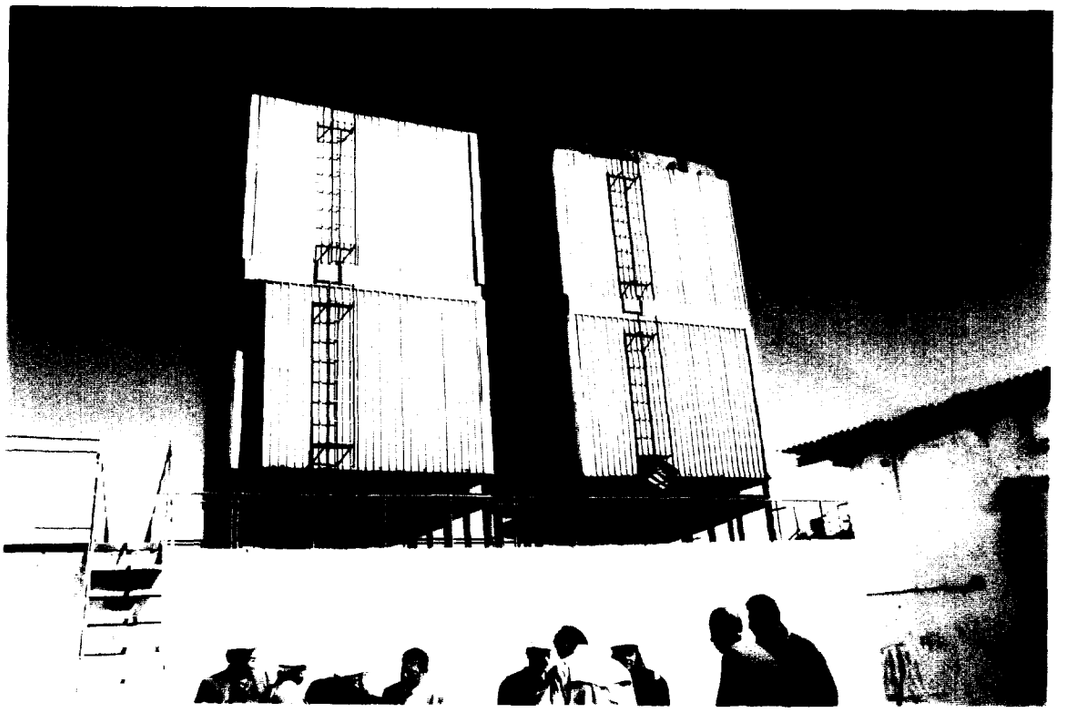

Trickling Filters (not in use)