PN-ABY-038

Report 3114-95-26-28

The Hashemite Kingdom of Jordan

Ministry of Water and Irrigation

Water Quality Improvement and Conservation Project

Industrial Audit Background Material:

Iron and Steel Industry

Science Applications International Corp.

Amman Chamber Of Industry

The Hashemite Kingdom Of Jordan

Development Alternatives, Inc.

USAID

The Technical Assistance Team Includes:

Development Alternatives, Inc.
Science Applications International Corp.
Harza Environmental Services, Inc.
Development Associates, Inc.

United States Agency for International Development
Contract No. 278-0288-00-C-4026-00

April 1995

PREFACE/ACKNOWLEDGMENTS

This report presents the background materials for Iron & Steel Industry prepared with emphasis on the pollution prevention/waste minimization (PP/WM) and water conservation practices for this industry. The report was prepared by Mrs. Mary Waldron, of Science Applications International Inc. (SAIC), Falls Church, Virginia, under subcontract with Development Alternatives, Inc. (DAI), Washington, D.C.

Efforts for preparation of this report was directed by Dr. Shawn R. Niaki, P.E., Pollution Prevention Program Director, of Harza Consulting Engineers and Scientists (Harza), Chicago, USA; coordination with Dr. Usama Mudallal, Environmental Director, of the Amman Chamber of Industry (Chamber); and the member of the PP/WM Committee from the Ministry of Water and Irrigation (MWI) staff, Eng. Rania Khaleq and the Water Authority of Jordan (WAJ) staff including Eng. Abdul Wahab Matar, Eng. Marwan Al-Tal, Eng. Nabeel Hejazeen, and Eng. Mohamad Lafi.

Special appreciation is given to Dr. Mohammed Bani Hani, Secretary General of MWI; Eng. Koussai Quteishat, Secretary General of WAJ; Mr. Khaldun Abuhassan, Chairman of the Chamber; Mr. Walid Al-Khatib, Director General of the Chamber; Dr. Muwaffaq Saqqar of MWI, Project Coordinator; and to DAI, as represented by Edwin D. Stains, Chief of Party; for their cooperation and confidence.

Table of Contents

Page

1.0 INTRODUCTION 1

1.1 Background 1
1.2 Objectives 2

2.0 INDUSTRIAL HISTORY 3

2.1 General 3
2.2 The Iron and Steel Manufacturing Industry in Jordan 3

3.0 PROCESS OVERVIEW 4

3.1 Ironmaking 4
3.2 Steelmaking 4
3.3 Continuous Casting 5
3.4 Hot Forming 5

4.0 WATER USE AND WASTE GENERATION IN THE IRON AND STEEL MANUFACTURING INDUSTRY 7

4.1 Water Use 7
4.2 Waste Generation 7
4.3 Wastewater Discharge Guidelines 8

5.0 POLLUTION PREVENTION AND WASTE MINIMIZATION TECHNIQUES USED BY THE IRON AND STEEL MANUFACTURING INDUSTRY 9

5.1 Water Conservation and Wastewater PP/WM Techniques 9
5.2 Solid Waste PP/WM Techniques 10
5.3 Air PP/WM Techniques 11
5.4 Treatment Technologies 12

6.0 REFERENCES

Attachment A Process Flow Diagram of the Iron and Steel Manufacturing Industry

Attachment B U.S. EPA Iron and Steel Manufacturing Limitations

Attachment C Selected Papers on Pollution Control in the Iron and Steel Manufacturing Industry

Attachment D Other Sources

Attachment E Abstracts

1.0 INTRODUCTION

1.1 Background

Under a contract with the United States Agency for International Development (USAID), Development Alternatives Incorporated (DAI) is performing an Industrial Wastewater Discharge Prevention (IWDP) Program in Amman, Jordan. The IWDP Program is one of the four components of the Water Quality Improvement and Conservation (WQIC) project funded by USAID. The Program is being performed by DAI with full coordination between the Jordanian Ministry of Water and Irrigation (MWI) and the Amman Chamber of Industry (Chamber).

The IWDP will be performed in three phases. The first phase requires completion of ten pollution prevention/waste minimization (PP/WM) opportunity audits by DAI and its sub-contractors. The second phase requires completion of Feasibility Studies (FS) for four of the audited facilities. Finally, demonstration projects will be completed for two of the selected FS facilities.

Due to the high cost of waste treatment, as well as the need to minimize waste of raw materials and resources, it is in the best interest of businesses and industries to minimize their waste generating practices. Companies with effective PP/WM programs may well be the lowest-cost producers of goods due to their efficient practices. Waste management practices can include:

1. Reduce waste generation

   - Substitution of less hazardous raw materials in product manufacture
   - Alteration of products manufactured to eliminate need for hazardous materials use
   - Replacement or upgrading of outdated or inefficient process equipment
   - Development of employee training programs to ensure employees efficiently manage raw materials and resources.

2. Reuse waste materials prior to disposal

   - Reuse of uncontaminated raw materials and resources (including water)
   - Reprocessing of previously discarded materials (e.g., off-spec materials, used materials)
   - On site recovery of reusable materials (e.g., used solvents, waste heat, scrap).

3. Recycle waste materials

4. Treat wastes and dispose of residues.

These options, in the order presented, represent the waste management hierarchy.

1.2 Objectives

The facility PP/WM audits are designed to assess the potential for pollution prevention and waste minimization at the study facilities. The goal of each audit is to evaluate and identify all possible PP/WM, wastewater clean-up, and water conservation techniques that are appropriate for the study facility. Audit documentation will consist of a background PP/WM assessment paper and an audit evaluation report. This document is intended to serve as the PP/WM background paper for the iron and steel manufacturing industry.

The specific objectives of this audit are as follow:

1. Review general industry background data and identify "state-of-the-art" processing and waste management practices.

2. Work on-site with industry representatives, ministry officials, and other interested groups to review current processing procedures and identify possible PP/WM options.

3. Develop a report that evaluates all possible PP/WM alternatives and water conservation

2.0 INDUSTRIAL HISTORY

2.1 General

The manufacture of iron and steel involves many processes. A large integrated facility may be involved in most or all of the processes beginning with the production of iron, then refining it into steel and finally forming that steel into various shapes. A smaller facility may be involved in only one or two of the major processes. The various distinct and separate operations can be grouped into three major processes: ironmaking, steelmaking, and forming. Attachment A contains a general schematic of the iron and steelmaking process and a general schematic of the forming process.

Most of the iron produced in the world today is by the blast furnace process where coke (produced from coal) is combined with iron ore (and/or other iron bearing materials), limestone and oxygen (air). While the blast furnace process is the most economical for the production of large tonnage, an alternative for small tonnage production is the direct reduction process which uses carbon monoxide and hydrogen made by natural gas rather than coke and oxygen. In the past, much of the steel was produced using the basic open-hearth process. Now the more efficient basic oxygen process and the electric arc furnace process are the predominant processes used. Further refining of the steel can be conducted by vacuum degassing. The molten steel is poured into molds to form ingots or are cast into semi-finished products. The ingots are reheated and subjected to a variety of hot and cold forming and finishing operations to produce products of various shapes and sizes.

2.2 The Iron and Steel Manufacturing Industry in Jordan

There are 6 iron and steel facilities in Jordan and 3 are being built. Of the 6 iron and steel facilities the Jordan Iron & Steel Industries Company, Ltd. (JISICO) is the only facility with an electric arc furnace; the others are rolling mills. One of the three facilities being built will also have an electric arc furnace. JISICO is privately owned by a group of 40 shareholders. A description of the facility is provided below.

The JISICO meltshop uses iron and steel scrap to produce iron/steel ingots. The production rate is 45,000 tons per year (T/yr). The JISICO rolling mill uses steel ingots to produce reinforcement bars. The production rate is 100,000 T\yr.

Wastes generated by the facility include wastewater, cooling water, 1,500 T\yr of slag, 1,750 T\yr of scale, and 115 T\yr of waste oil. The slag is stockpiled outside the buildings. The scale is also stockpiled outside although some of the scale is reused in the JISICO meltshop and some is sent for reuse to the cement industry. Cooling water is recycled after treatment. Oily wastewater is treated and the free oils recovered are used as supplementary fuel oil.

3.0 PROCESS OVERVIEW

In ironmaking, coal is converted to coke which is combined with iron ore (and/or other iron bearing materials) and limestone in a blast furnace to produce iron. In steelmaking, controlled amounts of oxygen are mixed with the molten iron which is converted into steel in either open hearth, basic oxygen, or electric arc furnaces. The steel is poured into molds to form ingots. Finally, a hot rolling mill reheats the ingots and shapes them into products such as reinforcement bar. A description of each of these processes is provided in the following sections.

3.1 Ironmaking

Although there are refinements in the iron making process the basic process uses a blast furnace in which coke, iron-bearing materials (iron ore and iron scraps) and limestone or dolomite are charged into the top of the furnace and heated air is blown into the bottom. Combustion of the coke provides heat and a reducing atmosphere. The limestone forms a fluid slag which floats on top of the molten iron. Occasionally, gravel, principally silica, is added for slag composition control. This slag combines with the unwanted impurities in the iron-bearing materials. Approximately 2.0 thousand kilograms (kkg) of ore, 0.54 kkg of coke, 0.45 kkg of limestone and 3.2 kkg of air produce approximately 0.9 kkg of iron, 0.45 kkg of slag, and 4.5 kkg of blast furnace gas. The blast furnace gas is used as fuel to preheat the incoming air that is blown into the blast furnace. The molten iron is withdrawn and casts into ingots (pig iron) or ladled directly into the steelmaking furnace as molten pig iron (termed "hot metal"). The molten slag is discarded.

3.2 Steelmaking

Steel is a iron-carbon alloy containing approximately 96 percent or greater iron and less than 1 percent carbon, but the carbon component gives the steel its hardness. The basic raw materials for steelmaking are pig iron (or hot metal), steel scrap, limestone, burned lime, dolomite, fluorspar, iron ores, and iron-bearing materials such as pellets or mill scale. The pig iron consists of iron, and other elements, the most predominant being carbon, manganese, phosphorus, sulfur, and silicon. In the furnace the raw materials are melted and the iron is refined to reduce or remove these elements to specified low levels thus converting it to steel. Various alloying metals are added (as part of the charge in the furnace or to the ladle of molten steel after the steel is removed from the furnace) to produce different grades of steel.

Modern steelmaking processes all use oxygen to refine molten pig iron. The oxygen combines with the carbon in the molten iron to produce carbon dioxide and carbon monoxide which are released as exhaust gases from the furnace. The silicon, manganese, phosphorous, and other impurities oxidize into the slag. The principal steelmaking processes in use today are:

- Basic Oxygen Furnace Process - There are two designs of the basic oxygen furnace. In the top-blown basic oxygen process (BOF or BOP), oxygen is blown down onto the surface of the molten pig iron at supersonic velocities through a water cooled lance (steel pipe).

  In the bottom-blown basic oxygen process (Q-BOP), pure oxygen and carrier gases such as natural gas, propane, or nitrogen and powdered fluxes such as burnt lime are blown upward through the molten pig iron through tuyeres located in the furnace bottom.

- Open-hearth Furnace Process - The furnace is a large structure constructed primarily of refractory bricks. The molted pig iron and other material is placed in the bottom of the furnace, fuel is heated and injected into the furnace. Air used to burn the fuel is preheated in large brick chambers (called checkers) located on either side of the furnace. As the furnace

is fired at one end, the hot combustion products leave through the chamber on the other end, heating the chamber bricks. The firing and air flow is reversed so that the heat from the chamber bricks is used to preheat the air.

- Electric Arc Furnace Process - An electric arc is used to melt the raw material, steel scrap and other components. Oxygen is injected into the molten bath. The oxygen and carbon form carbon monoxide gas which bubbles out of the bath.

There are two principal types of furnaces: acid or basic. An acid furnace is lined with refractory material composed of silica sand. A basic furnace is lined with dolomite or magnesite. Both the basic and acid process removes carbon, manganese, and silicon, but phosphorus and sulfur are removed by the basic process. Therefore, if the iron is high in sulfur or phosphorus, the basic process is used.

3.3 Continuous Casting

In the continuous casting process operation, molten steel from a furnace is transferred from the ladle to the tundish. The tundish, lined with refractory bricks, maintains a constant head of molten metal that controls the casting rate. The tundish also distributes the molten steel to the casting strands. The molten steel from the tundish pours through a water cooled copper mold to produce a semi-finished product, such as a billet. As the steel emerges from the mold, the steel is sprayed with water to further cool and solidify the cast product.

3.4 Hot Forming

A variety of hot forming operations can be performed on the steel. Hot forming mills use iron or steel ingots as the raw material and through a series of hot rolling operations the steel ingot cross-section is reduced in shape and increased in length. Hot rolling mills specialize in producing specific shapes (slabs, blooms, billets, plates, strips, bars, wire). The three distinct types of rolling mills involved in the final production of bars or rods are:

- Primary Mill, called blooming mill, reduces the ingot to a bloom. The blooming mill may be coupled with the billet mill (below) so that the bloom can be immediately rolled to a billet without reheating.

- Section Mill, called billet mill, reduces the bloom to a billet. The billet mill may also reduce the bloom to the final bar or rod.

- Finishing Mill, called bar or rod mill, reduces the billet to bars or rods.

Blooming Mill - Overhead cranes with lifting tongs place the ingots into a soaking pit furnace. The furnace is partly underground, lined with refractory bricks, and fuel fired with oil or gas. The heated ingots are transferred by the cranes to ingot transfer cars that deliver the ingots to the rolling stand. The mill may be designed as either a reversing mill or a tandem mill. In a reversing mill, the ingot is rolled through the same mill stand a number of times. A tandem mill has several mill stands arranged so that the ingot is rolled forward in one direction continuously.

Billet Mill - Similar to the blooming mill and the bar mill, the billet mill may or may not have a reheat furnace. The mill is designed as a cross-country mill, a continuous mill or a three high mill. The cross-country and continuous mill designs are described below in the bar mill. The three high mill consists of three rolls mounted on a single roll housing stand, one roll above the other. Billets are rolled in one direction between the bottom and middle rolls and in the opposite direction between the middle and top rolls. Lifting and tilting tables move the billets to the two different levels.

Bar Mill - In the bar mill the billet is heated to rolling temperature in a continuous reheat furnace. The billets are fed into one end and are moved through the furnace by a billet pusher. A shear cuts the heated billets to size or removes bent ends. The heated billet is then moved through the various mill stands each decreasing and lengthening the billet to the final finished reinforcement bar size. The bar mill is either arranged in a cross-country design or a continuous design. In the cross-country design the various size roll stands (roughing, intermediate and finishing) are arranged side by side. The billet is rolled through one stand then transferred to the next, where it is rolled in the reverse direction. The continuous mill consists of a series of roll stands arranged one after the other so that the piece (billet) enters the first stand and takes one pass in each stand of rolls to merge from the last as the finished product (reinforcement bar).

Other operations performed at the mills include hand or machine chipping, scarfing, or grinding to remove surface defects. The end of the bloom, billet, or bar is cut off or "cropped" by electric or hydraulic shears.

4.0 WATER USE AND WASTE GENERATION IN THE IRON AND STEEL MANUFACTURING INDUSTRY

The iron and steel industry uses large volumes of water during production processes. Water is used for cooling manufacturing equipment and final products. Water is also used in air pollution control devices such as scrubbers to remove airborne materials.

4.1 Water Use

Ironmaking - Water is used in the blast furnace operation for two purposes: cooling of the furnace and other equipment; and, cleaning and cooling of the furnace exhaust gases.

Steelmaking - The principal water use in the steelmaking operations is for the cleaning and cooling of the furnace exhaust gases. Three different scrubbing systems are used to clean waste gases from basic oxygen furnaces: semi-wet; wet-suppressed combustion; and wet-open combustion. Electric furnaces use either semi-wet or wet systems while the open hearth furnaces use only wet systems. The semi-wet system uses less water than the wet systems.

Continuous Casting - The continuous casting process operation uses noncontact cooling water to cool the copper mold and the hydraulic machinery. Contact cooling water is sprayed onto the steel as it emerges from the copper mold. This contact cooling water becomes contaminated with the iron oxide scale that forms on the steel as it cools and solidifies. The cooling water can also be contaminated with oil and grease from the hydraulic and lubrication systems for the casting equipment (e.g., hydraulic shears and pincher rolls). Approximately 5 to 10 percent of the spray cooling water is evaporated.

Forming - Water use occurs primarily in the following areas at an hot forming mill:

- High pressure descaling spray water - When the hot steel product is being rolled, iron oxide scale (called mill scale) forms on the surface of the hot steel. The scale is removed by direct contact high pressure (1,000-2,000 psig) sprays. Approximately 4 percent of the water sprayed on the hot steel evaporates.

- Work roll and roll table spray cooling water - Roll cooling water is used to cool the work rolls of the mill stands to prevent surface cracking of the steel rolls due to sudden temperature changes. Low pressure spray cooling water is also used to keep the mill stand rolls and the table rolls cool as the hot steel passes over or in between them. Water is used to cool equipment such as hot shear equipment.

- Flume flushing - Water is used to flush the mill scale into trenches and pits.

- Waters from air pollution equipment - The scarfing operation generates fume, smoke, and waste gases. Wet scrubbers used to remove these airborne pollutants generate wastewater.

4.2 Waste Generation

Ironmaking - The major process wastewater generated by the ironmaking process is the blast furnace exhaust gas cleaning (scrubbing) and cooling wastewater. Solid wastes generated consists of the slag, in-plant scrap and blast furnace flue dust and sludges collected by the air pollution control devices.

Steelmaking - The exhaust gas cleaning and cooling wastewater is the largest volume of wastewater generated. Each of the three types of furnaces generate different wastewater volumes and pollutant characteristics. Semi-wet systems generate less wastewater because the systems use less water. Wet-suppressed combustion system wastewater is lower in suspended solids than wastewater from the wet-open combustion system. Solid wastes consists of slag, in-plant scrap and furnace flue dust and sludges.

Forming - Wastewaters from descaling, roll cooling, equipment cooling, roll tables and floor flushing

5.0 POLLUTION PREVENTION AND WASTE MINIMIZATION TECHNIQUES USED BY THE IRON AND STEEL MANUFACTURING INDUSTRY

The iron and steel manufacturing industry has for decades practiced water conservation and reuse. In addition to control of water use, many manufacturers have explored the reuse of solid wastes. Instead of discharging these materials as wastes, prudent companies have developed techniques for further processing and recovery of these former waste materials. The pollution prevention and water conservation practices that have been implemented by the industry have usually been reported using the terms pollution control, water or wastewater treatment, waste recycling or reuse rather than pollution prevention and waste minimization. Thus the papers listed in Attachments C, D, and E do not use the term pollution prevention but instead focus on the treatment or recovery of wastes for recycle or reuse.

Structural changes, process innovations and plant engineering to increase the energy efficiency in the steel industry has contributed to pollution control or pollution reduction. Some examples are:

high top pressure blast furnaces

basic oxygen steelmaking process (replacing the basic Bessemer process)

walking beam furnaces in rolling mills

continuous casting (replacing the casting of ingot and rolling of ingots into blooms and blooms into billets)

hot charging of the continuously cast material to the rolling mill furnaces

Further energy savings and pollution reduction may come from near net shape casting of steel (Aichinger, e.t al., 1992). Process design innovations occur slowly and historically have been oriented towards increased production efficiency and not pollution prevention. The pollution prevention benefits of these design changes were incidental. For example, the electric arc furnace process which is now in prominent use, particularly in processing steel scrap and high grade metal alloys uses less water than the basic oxygen furnace process. Larger electric arc furnace units, shorter charge times, and computer aided process control have decreased electric consumption.

The integration of the various process operations from ironmaking to semi-finished or finished product by the integrated steel mills (consisting of coke plant, sintering plant, blast furnace, basic oxygen furnace, continuous casting, and rolling mill) has enabled these facilities to increase the reuse and recycle of wastes within the facility.

Many PP/WM techniques have been reported in the literature for specific iron and steel industry applications. While not all of these techniques will apply to any specific facility, certain technologies may provide ideas or inspiration for additional applications. The PP/WM techniques that have been described in the literature sources included in Attachment C or listed in Attachments D and E of this paper are summarized in this section.

5.1 Water Conservation and Wastewater PP/WM Techniques

The single greatest water conservation and wastewater PP/WM technique in the iron and steel industry is the recycling of the enormous amount of cooling water (both contact and noncontact) used throughout the process operations (furnace, continuous casting, and rolling mill). This technique was implemented decades ago. Wastewater reuse in the iron and steel manufacturing facilities in the U.S. have reported recycle rates of 98

percent for ironmaking and 96 to 100 percent for steelmaking. Ten years ago recycle rates of 60 to 77 percent were reported for hot forming operations but since then 99 percent recycle has been demonstrated for hot forming operations. The U.S. EPA reported that 25 percent of the continuous casting operations were achieving zero discharge. (U.S. EPA, 1982) Some facilities in Japan have demonstrated 100 percent reuse of wastewater. Also in Japan salt water is used in a once-through noncontact cooling system for the furnace.

Specific water conservation and wastewater reuse techniques that have enable extensive reductions in wastewater discharges include:

- Reuse of the furnace exhaust gas cleaning and cooling water after treatment
- Reuse hot mill cooling and descaling wastewater after treatment.
- Process water cascading, for example use of low quality water or process wastewater as flume flushing water.
- Use of dry air pollution control systems, such as baghouses, instead of wet air pollution control systems

Recycling not only reduces water consumption but concentrates the contaminants and makes treatment to remove these contaminants more cost efficient as well as reducing the contaminant loading.

The advances in water conservation and PP/WM in recent years has been due to improved treatment of the wastewater to enable higher recycle rates. The higher recycle rates reduce the pollutant loadings discharged to the environment.

The industry predominantly uses mechanical draft evaporative cooling towers to reduce the heat load of recycled water. Recycle systems that include evaporative cooling towers and evaporative cooling ponds at plants located in arid and semi-arid regions of the U.S. were not found to consume significant amounts of water by evaporation.

The oil and grease from equipment and machinery that contaminate the cooling water can be recovered and reused as fuel in steam boilers and reheating furnaces.

5.2 Solid Waste PP/WM Techniques

The iron and steel industry generates an enormous amount of solid waste that can become a waste disposal problem. Facilities in North America (e.g., U.S. and Canada), Europe (e.g., Sweden, Germany, Great Britain), Australia, and Asia (e.g., Japan and China) have successfully pioneered recycling and reusing the slag, dust, and iron oxide scale. Japan reports 98 percent recycle of solid waste. Solid waste recycling measures that have been practiced include:

- Use of the hot mill scale and furnace flue dust as raw material for iron or steelmaking;
- Use of in-plant scrap as raw material for iron or steelmaking;
- Use of slag from steelmaking as raw material for the ironmaking blast furnace;
- Recover of the oil and reuse as fuel; and
- Use of slag as material for roads, cement, concrete aggregate.

For example, at the Keihin Works in Japan, the oxidizing slag from the electric arc furnace is magnetically separated into a metal (iron) portion that is reused and a non-metal portion that is reused as road construction material. (Shinoda, 1980)

Recycling of converter slag back to the ironworks enables recovery of iron, manganese, and calcium oxide but results in unfavorable increases of the phosphorus content in melted iron. The steelworks has to increase the charging quantity of "lime plus dolomite" at the time of refining. The Q-BOP converter can accept material with a higher phosphorus content; it has better de-phosphorus capability. (Saigusa, et. al., 1980)

At the Rohrenwerke Bous facility in Germany, iron oxide rolling mill scale and dusts and sludges from the meltshop was converted to sponge iron in a rotary kiln and then reused in the electric arc furnace at a ratio of scrap to sponge of 3 to 1. (Eichberger, et. al., 1980)

Mill scale can be reused because of its high iron content and can replace more costly purchased iron units and can enhance quality of the sinter produced. Raw mill scale waste is composed of metallic scrap, rubble, water, mill lubricants, and rolling oils. Scrap and rubble can be removed mechanically. However oily mill scale cannot be sintered in large quantities because the oil volatilizes during sintering, creating air pollution problems or operating problems for the air pollution control devices. The volatilized hydrocarbons that are collected in the bag house or scrubber can present a fire hazard for the electrostatic precipitators of sinter strand dedusting, blind the filter bags and result in unacceptable stack emissions. Oil removal processes include: washing with water, hot alkaline or solvent or thermal incineration by direct or indirect firing. A rotary kiln incineration process can be operated to completely destroy the hydrocarbons (1500° F in the after burner). High intensity wet scrubbers remove particulates with an efficiency of 99 percent. The slurry from the scrubber is pumped to a basin where the solids settle and water is returned to the scrubber for reuse. Problems have been encountered with excessive abrasion and internal erosion, particularly on the quencher, venturi inlet, and venturi throat. These pieces need to be made of abrasion-resistant material. (Harold, 1980)

There is a patented process, INMETCO, that uses dust from steel mill furnaces and baghouses, mill scale, and grinding swarf to produce pellets that are then reduced in a rotary hearth furnace and cast into 50 pound pig ingots. (Pargeter and Weil, 1980)

At the Cockerill-Seraing facility in Belgium an experimental road was built with BOF slag. (Piret, et. al., 1980) Steel plant slag has also been used in Australia as road base, cement, and concrete aggregate (Jones and Murrie, 1980). Electric arc furnace slag is expansive and brittle due to the high lime content but can be used as road bed material and the high lime content keeps the metals from leaching into the groundwater.

5.3 Air PP/WM Techniques

The blast furnace gas, coke oven gas, converter (BOF) gas and waste steam are all reused to recovery heat and energy. The reuse of these gases have reduced the emissions of dust, sulphur dioxide, nitrogen oxides, carbon monoxide, and carbon dioxide (Aichinger, et. al., 1992). Recovery of process gases in steam boilers can further reduce NOx concentrations.

Modern reheating furnaces are fired by 150 to 200 roof burners. This high number of burners and the small distance between these burners and the surface of the reheated material increases the NOx concentrations. The use of fuel gas with a high rate of waste heat utilization for air preheating to save energy leads to higher NOx emissions but to lower SO_2 and CO emissions. (Aichinger, et. al., 1982)

The installation of air pollution control devices that use water to cool and clean the gases can increase a facility's use of water and discharge of wastewater. There are water conservation and PP/WM techniques that can reduce the water and wastewater impacts of these wet gas cleaning systems:

- Provide separate water systems for equipment cooling and gas cleaning. Equipment cooling system can be a closed-loop cooling system with cooling towers or a semi-closed loop with the cooling tower blowdown being reused as part of the water for the gas cleaning system.

- Control water application in semi-wet air pollution control systems so that no wastewater discharge is generated.

- Cascade all or a portion of the gas cooling wastewater to the gas cleaning system

- Arrange gas scrubber streams in series. The less contaminated second stage wastestream would be cooled and returned to the first stage scrubber. The more contaminated streams from the "first stage" scrubber can be treated and recycled to the second stage wastestream or to other operations.

The best option is to use dry air pollution control systems (such as baghouses) rather than wet systems, where possible. One dry gas cleaning system consists of an evaporative cooler to cool the gases followed by a baghouse system.

At the U.S. Steel National-Duquesne Works the electric furnace baghouse dust was recycled back to the electric furnace, reducing flourspar usage. The 40 tons of balled dust produced each week was consumed by back-charging about 2000 pounds of balled dust to each heat. (Harris, 1980)

5.4 Treatment Technologies

Iron and steel manufacturing facilities often utilize physical/chemical "in-plant" control technologies aimed at water reuse. Recycling of wastewater can cause plugging, scaling, and corrosion if the wastewater is not treated. In-plant treatment can include:

- adding chemicals that inhibit scaling or corrosion
- providing sufficient blowdown volume to limit the build-up of dissolved solids and other pollutants
- evaporation and reuse of condensate
- removal of suspended solids and oil and grease

Wastewater treatment generally consists of physical and chemical technologies to remove suspended solids and oil and grease such as: gravity settling, neutralization, chemical precipitation and clarification, and filtration. Flocculation with polymers or other flocculent aid is often used in conjunction with sedimentation.

The current treatment technology most commonly used for cooling and cleaning water used in hot rolling and continuous casting operations is sedimentation in clarifiers at rates of 1 to 2.5 gallons per minute per square foot (gpm/ft^2). Enhanced removal is achieved with the addition of chemical flocculants. A clarifier performing optimally can achieve suspended solids concentrations in the effluent of 10 to 20 milligrams per liter (mg/L).

Sand filters can achieve an effluent with a lower suspended solids concentration than gravity settling basins and clarifiers without the addition of chemicals.

Suspended solids removal - Many types of suspended solids removal devices are used by the iron and steel industry. These include settling lagoons; clarification devices such as clarifiers, thickeners, and inclined plate separators. Treatment technologies that will achieve lower concentrations of suspended solids include coagulation and settling and sand or mixed media filtration.

Oil removal - The treatment and removal of free and emulsified oils and greases is typically accomplished by gravity separation, physical filtration and/or flotation. These treatment processes may be used alone or in combination depending on the nature of the oils and greases to be treated and the strength of the wastestream. In a scale pit where the water level and oil content vary considerably, saucer or rotating van skimmers would be better than endless rope or endless belt skimmers.

Toxic metal pollutant removal - The treatment technologies for metals removal include those used for suspended solids removal as well as chemical precipitation and magnetic filtration or separation.

High-gradient magnetic separation uses a matrix of fine ferromagnetic fibers, such as stainless steel wool, placed in a strong magnetic field, to trap magnetic, micro-size particles from water. A bench-scale Kolm-Marston type of magnetic separator has been found to reduce the suspended solids from blast furnace gas washer water to 5-20 mg/L at flow rates of 18-200 gpm/ft^2. The 200 gpm/ft^2 flow rate is two orders of magnitude higher than flow rates for sedimentation and one order of magnitude higher than deep bed filters. (McNallan, 1976)

Furnace exhaust gas cleaning systems include baghouses (a dry air pollution control system) and wet gas cleaning systems such as venturi scrubbers, adjustable orifice scrubbers, separators, spray chambers, and hydroclones.

Though not used extensively because of the costs of these treatment technologies, ion exchange, reverse osmosis, and evaporation produce high quality water and may prove economical for small closed-loop recycle systems. Further information on treatment technologies and pollution prevention practices can be found in the papers included in Attachment C or listed in Attachments D and E.

6.0 REFERENCES

Attachment A Process Flow Diagram of the Iron and Steel Manufacturing Industry

Attachment B Iron and Steel Manufacturing Wastewater Standards

Attachment C Selected Papers on Pollution Control in the Iron and Steel Manufacturing Industry

Attachment D Other Sources

Attachment E Abstracts

Attachment A

Process Flow Diagram of the
Iron and Steel Manufacturing Industry

(From: Development Document for Effluent Limitations Guidelines and Standards for the Iron and Steel Manufacturing Point Source Category, Volume I)

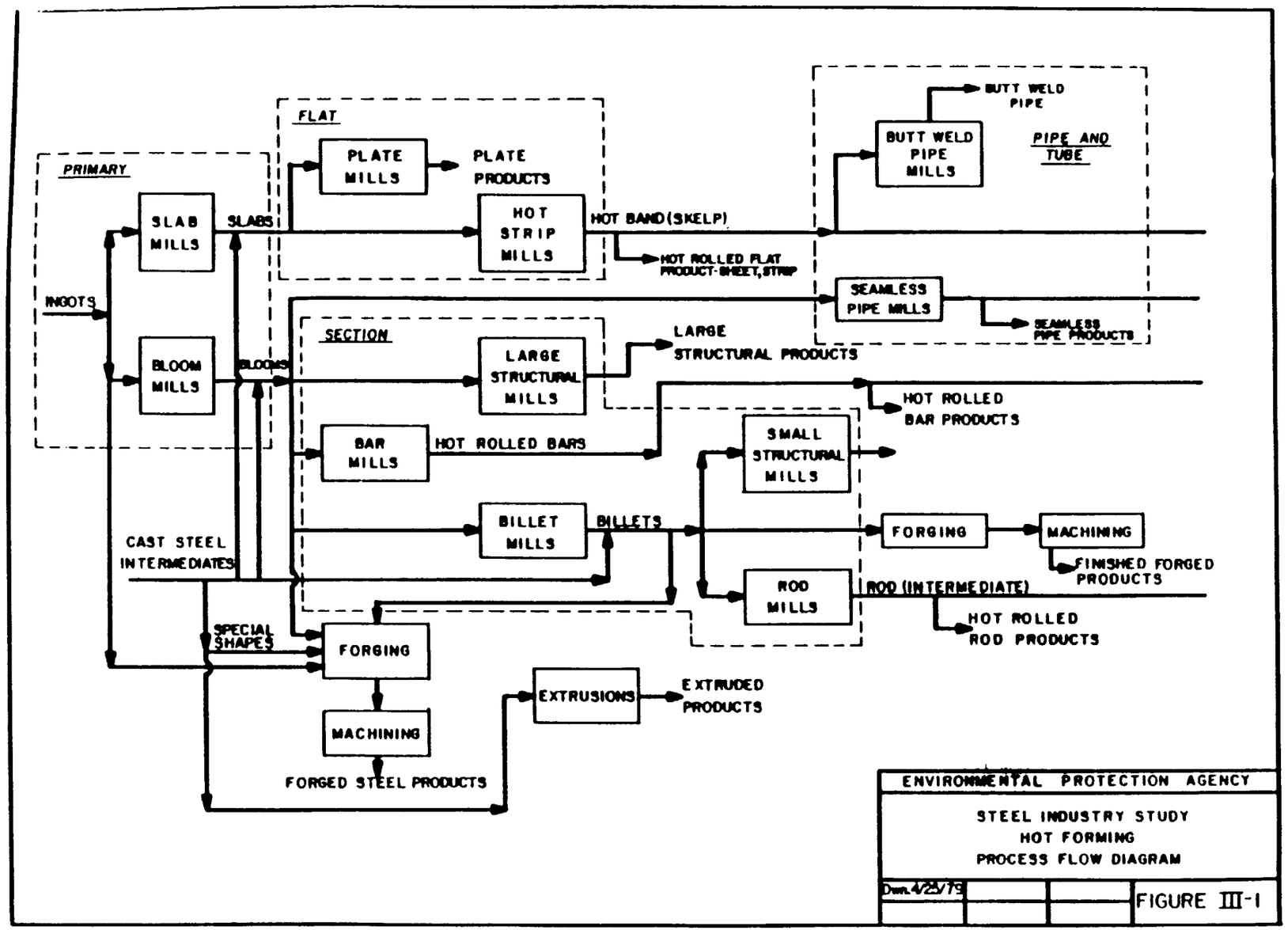
PRIMARY
INGOTS
SLAB MILLS
BLOOM MILLS
SLABS
BLOOMS
FLAT
PLATE MILLS
PLATE PRODUCTS
HOT STRIP MILLS
HOT BAND (SKELP)
HOT ROLLED FLAT PRODUCT-SHEET, STRIP
BUTT WELD PIPE MILLS
BUTT WELD PIPE
PIPE AND TUBE
SEAMLESS PIPE MILLS
SEAMLESS PIPE PRODUCTS
SECTION
LARGE STRUCTURAL MILLS
LARGE STRUCTURAL PRODUCTS
HOT ROLLED BAR PRODUCTS
BAR MILLS
HOT ROLLED BARS
SMALL STRUCTURAL MILLS
BILLET MILLS
BILLETS
FORGING
MACHINING
FINISHED FORGED PRODUCTS
CAST STEEL INTERMEDIATES
ROD MILLS
ROD (INTERMEDIATE)
HOT ROLLED ROD PRODUCTS
SPECIAL SHAPES
FORGING
MACHINING
FORGED STEEL PRODUCTS
EXTRUSIONS
EXTRUDED PRODUCTS
ENVIRONMENTAL PROTECTION AGENCY
STEEL INDUSTRY STUDY
HOT FORMING
PROCESS FLOW DIAGRAM
Dwn. 4/25/79
FIGURE III-1

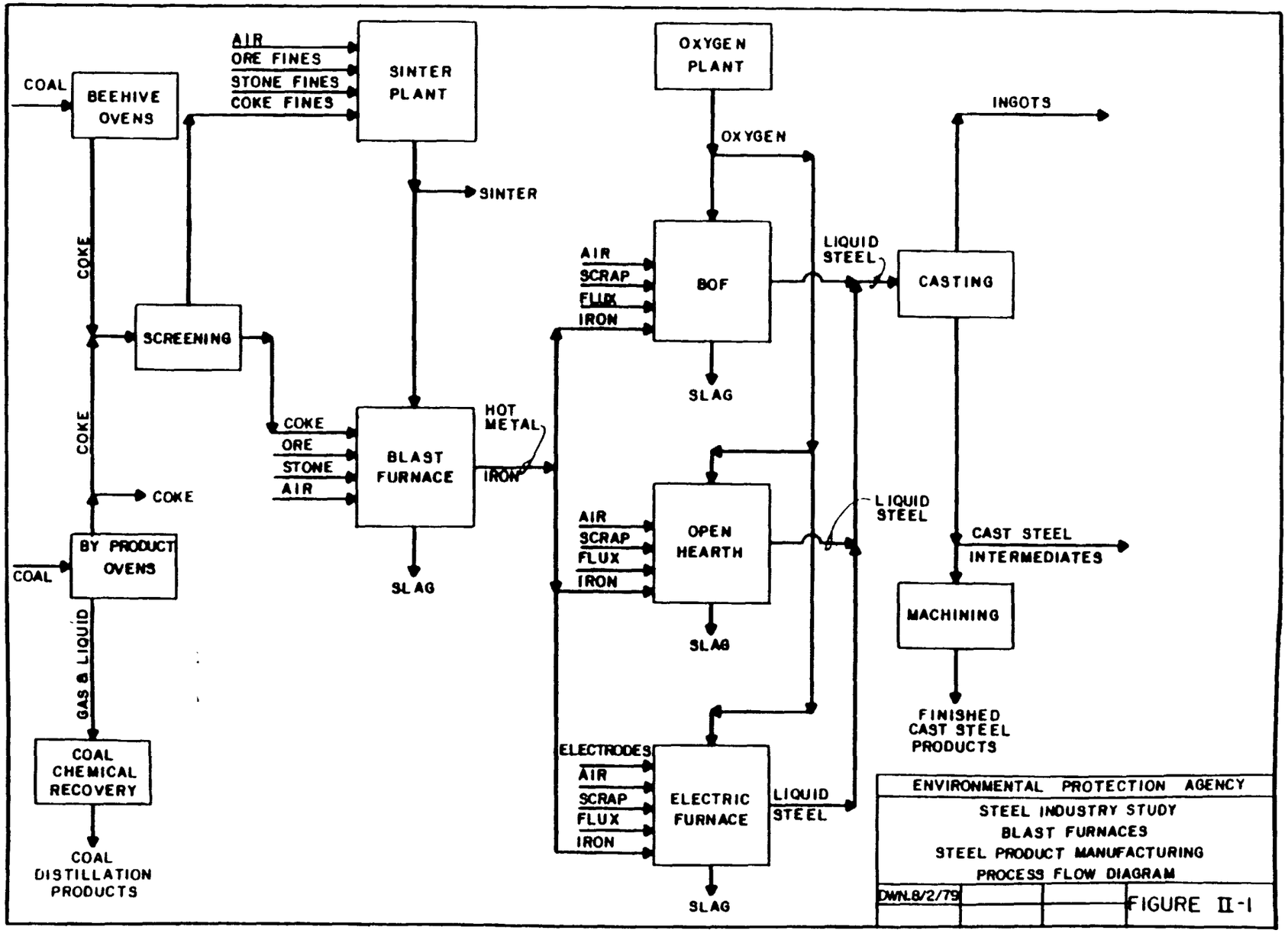
COAL
BEEHIVE OVENS
COKE
COKE
COKE
BY PRODUCT OVENS
COAL
GAS & LIQUID
COAL CHEMICAL RECOVERY
COAL DISTILLATION PRODUCTS
SCREENING
AIR
ORE FINES
STONE FINES
COKE FINES
SINTER PLANT
SINTER
COKE
ORE
STONE
AIR
BLAST FURNACE
SLAG
HOT METAL
IRON
OXYGEN PLANT
OXYGEN
AIR
SCRAP
FLUX
IRON
BOF
SLAG
LIQUID STEEL
AIR
SCRAP
FLUX
IRON
OPEN HEARTH
SLAG
LIQUID STEEL
ELECTRODES
AIR
SCRAP
FLUX
IRON
ELECTRIC FURNACE
SLAG
LIQUID STEEL
CASTING
INGOTS
CAST STEEL
INTERMEDIATES
MACHINING
FINISHED CAST STEEL PRODUCTS
ENVIRONMENTAL PROTECTION AGENCY
STEEL INDUSTRY STUDY
BLAST FURNACES
STEEL PRODUCT MANUFACTURING
PROCESS FLOW DIAGRAM
DWN.8/2/79
FIGURE II-1

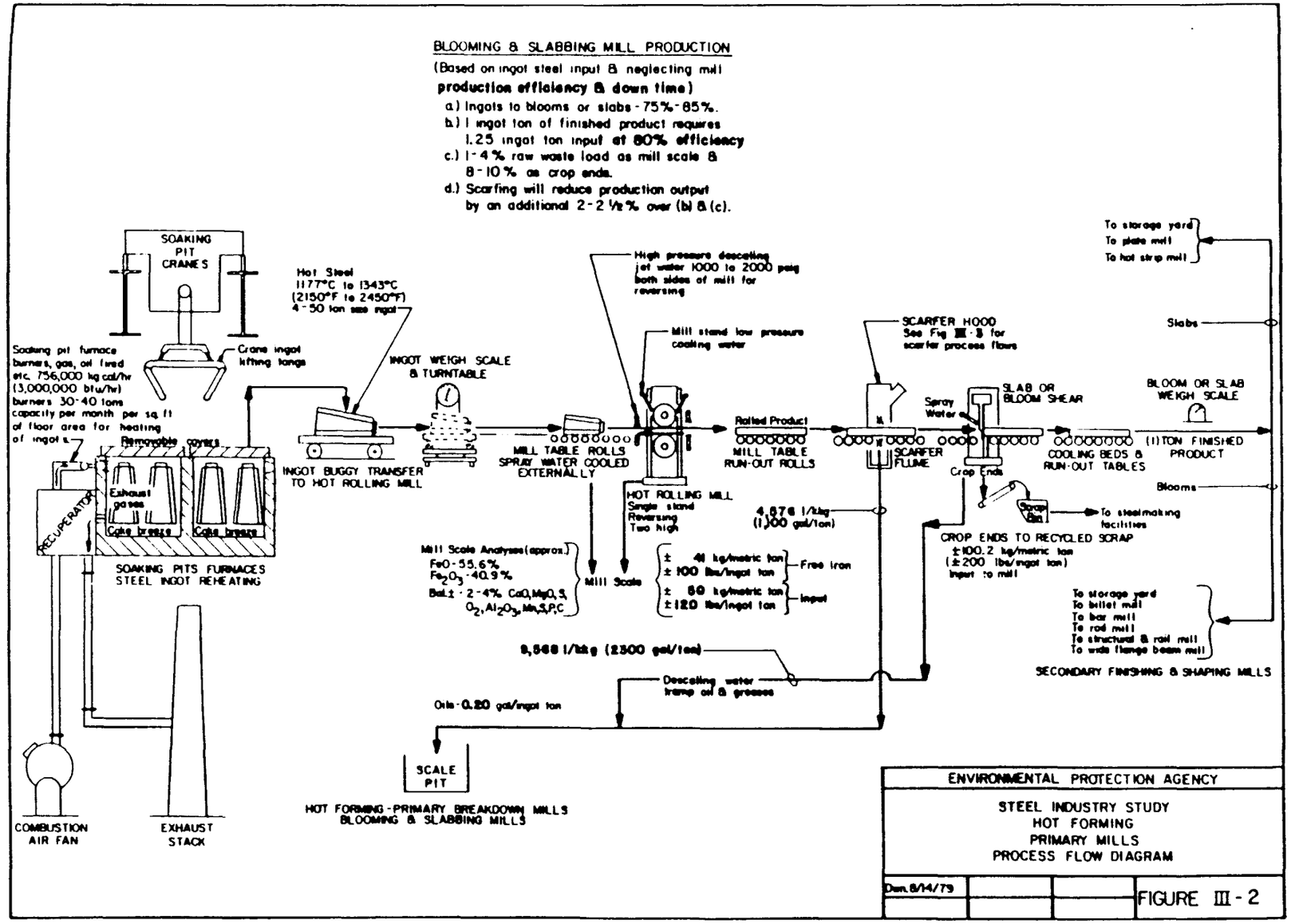
BLOOMING & SLABBING MILL PRODUCTION
(Based on ingot steel input & neglecting mill production efficiency & down time)
a.) Ingots to blooms or slabs - 75%-85%.
b.) 1 ingot ton of finished product requires 1.25 ingot ton input at 80% efficiency
c.) 1-4% raw waste load as mill scale & 8-10% as crop ends.
d.) Scarfing will reduce production output by an additional 2-2 1/2% over (b) & (c).
SOAKING PIT CRANES
Crane ingot lifting tongs
Soaking pit furnace burners, gas, oil fired etc. 756,000 kg cal/hr (3,000,000 btu/hr) burners 30-40 tons capacity per month per sq. ft of floor area for heating of ingots
Removable covers
Exhaust gases
Coke breeze
Coke breeze
RECUPERATOR
SOAKING PITS FURNACES STEEL INGOT REHEATING
COMBUSTION AIR FAN
EXHAUST STACK
Hot Steel 1177°C to 1343°C (2150°F to 2450°F) 4-50 ton size ingot
INGOT WEIGH SCALE & TURNTABLE
INGOT BUGGY TRANSFER TO HOT ROLLING MILL
MILL TABLE ROLLS SPRAY WATER COOLED EXTERNALLY
High pressure descaling jet water 1000 to 2000 psig both sides of mill for reversing
Mill stand low pressure cooling water
HOT ROLLING MILL Single stand Reversing Two high
Rolled Product
MILL TABLE RUN-OUT ROLLS
4,676 l/kg (1,100 gal/ton)
Mill Scale Analyses (approx.) FeO-55.6% Fe_2O_3-40.9% Bal.± 2-4% CaO, MgO, S, O_2, Al_2O_3, Mn, S, P, C
Mill Scale
± 41 kg/metric ton
± 100 lbs/ingot ton
Free iron
± 50 kg/metric ton
± 120 lbs/ingot ton
Input
9,568 l/kg (2300 gal/ton)
Descaling water tramp oil & greases
0.1a-0.20 gal/ingot ton
SCALE PIT
HOT FORMING-PRIMARY BREAKDOWN MILLS BLOOMING & SLABBING MILLS
SCARFER HOOD See Fig III-3 for scarfer process flows
SCARFER FLUME
Spray Water
SLAB OR BLOOM SHEAR
Crop Ends
COOLING BEDS & RUN-OUT TABLES
BLOOM OR SLAB WEIGH SCALE
(1) TON FINISHED PRODUCT
To storage yard
To plate mill
To hot strip mill
Slabs
Blooms
To steelmaking facilities
CROP ENDS TO RECYCLED SCRAP
±100.2 kg/metric ton (±200 lbs/ingot ton) input to mill
To storage yard
To billet mill
To bar mill
To rod mill
To structural & rail mill
To wide flange beam mill
SECONDARY FINISHING & SHAPING MILLS
ENVIRONMENTAL PROTECTION AGENCY
STEEL INDUSTRY STUDY
HOT FORMING
PRIMARY MILLS
PROCESS FLOW DIAGRAM
Dan. 8/14/79
FIGURE III-2

Attachment B

Iron and Steel Manufacturing Wastewater Standards

The United States Environmental Protection Agency (U.S. EPA) has established numerical "effluent limitations" for several segments of the iron and steel manufacturing industry. Numerical limits have been established for facilities that discharge treated effluent directly to a receiving water. There are also limits for facilities that discharge wastewater to a municipal treatment plant.

The limitations established by U.S. EPA are based on an evaluation of the "best available treatment (BAT)" for the types of wastes generated by the iron and steel manufacturing industry. U.S. EPA gathered data on the performance of well operated treatment systems, statistically evaluated these data, and developed effluent limitations reflective of treatment system performance. Limitations are published in "production-based" format; thus, each facility will receive unique mass or concentration-based limits depending on the production rate at the facility. Unique limitations are developed for both a "daily maximum" (average over a calendar day), and a "monthly average" (average over a calendar month). Selected U.S. EPA iron and steel manufacturing effluent limitations that would apply to a facility conducting steelmaking by electric arc furnace, continuous casting, and hot rolling are provided in Table B-1 below.

Facility specific limits are imposed and enforced by the government through discharge permits. In addition, municipal governments may establish more stringent numerical limitations than the U.S. EPA limitations for industries that discharge to the municipal sewer system. These limitations may be based on the treatment capacity of the municipal treatment plant or on the technology available to industrial user to control its discharge. In the United States permits issued to the industries are enforceable by the Federal, State and local governments and private citizens.

Discharge standards that apply to iron and steel facilities in Turkey, Japan, and Germany are presented in Tables B-2, B-3, and B-4, respectively.

Table B-1 Selected EPA Effluent Limitations
for the Iron and Steel Industry

	TSS	pH	Pb	Zn	O&G
Steelmaking - EAF, semi-wet APC	ND	ND	ND	ND	-- --
Steelmaking - EAF, wet APC	0.0687 0.0229	6.0 - 9.0	0.000413 0.000138	0.000620 0.000207	-- --
Continuous casting	0.0780 0.0260	6.0 - 9.0	0.0000939 0.0000313	0.000141 0.0000469	0.0234 0.0078
Hot forming - primary mills without scarfing	0.150 0.0561	6.0 - 9.0	-- --	-- --	0.0374 --
Hot forming - section mills	0.357 0.134	6.0 - 9.0	-- --	-- --	0.0894 --

ND - No discharge
-- - No effluent limitation established
EAF - Electric arc furnace
APC - Air pollution control

Source: U.S. EPA

Table B-2 Wastewater Standards for Iron and Steel Industry in Turkey

Wastewater standards for general iron and steel production

Parameter	Instant sample (mg/liter/ton)	Composite sample (mg/liter/ton)
[illegible]	[illegible]	100

Table B-3 National Effluent Standards in Japan

Parameter	Standard (mg/liter)
arsenic	<0.5
cadmium	<0.1
copper	<3
cyanide	<1
hexavalent chromium	<0.5
dissolved iron	<10
lead	<1
dissolved manganese	<10
mercury	<0.005
alkyl-mercury	not detectable
orthophosphorus	<1
zinc	<3
fluorine	<5
phenol	<5
normal hexane extracts	<5
PCB	<1
suspended solids	<200
chemical oxygen demand	<160
coliform	<3000
pH	5 - 9

Source: Nagasawa, T. and T. Kawaura, "Waste Water Control in the Japanese Iron and Steel Industry," Environmental Control in the Steel Industry, International Iron and Steel Institute, Brussels, 1992.

Table B-4 Effluent Standards in Germany

Parameter	Standard
pH	6.5 - 9.5
sulfate	600 ppm
zinc	3 ppm
tin	3 ppm
lead	3 ppm
total chromium	2 ppm
hexavalent chromium	0.5 ppm
substances extracted by petroleum ether	20 ppm
temperature	30°C

Source: Schmidt, Artur, et. al. "Specialized Water Treatment for Environmental Control of Pickle Lines, Galvanizing Lines and Cold Rolling Mills", Iron and Steel Engineer, Vol 59, No. 3, pp.33-38, 1982.

Attachment C (continued)

Selected Papers on Pollution Control in the Iron and Steel Manufacturing Industry

NOTICE: This material may be protected by copyright law. (Title 17 U.S. Code)

Ing, et. al. "Regulations, Technological Strategies, Costs of Pollution Control: Development in the Federal Republic of Germany", Environmental Control in the Steel Industry, International Iron and Steel Institute, Brussels, pp. 1-14 through 1-22, 1992.

Yoshida, M. "Management of Environmental Control in the Japanese Steel Industry", Environmental Control in the Steel Industry, International Iron and Steel Institute, Brussels, pp. 1-23 through 1-45, 1992.

Onur, S. "Organisation and Management of Environmental Policies and Strategies for the Iron and Steel Industry in Turkey," Environmental Control in the Steel Industry, International Iron and Steel Institute, Brussels, pp 1-103 through 1-114, 1992.

Ing and H. P. Johann. "Soil Rejuvenation on Industrial Sites in the Iron and Steel Industry", Environmental Control in the Steel Industry, International Iron and Steel Institute, Brussels, pp 2-14 through 2-28, 1992.

Shimizu, A. "A Total Management System for Steelworks Waste", Environmental Control in the Steel Industry, International Iron and Steel Institute, Brussels, pp 2-39 through 2-47, 1992.

Fujiwaki, Y. and K. Oki. "Waste Recycling System for Stainless Steel Production", Environmental Control in the Steel Industry, International Iron and Steel Institute, Brussels, pp 2-48 through 2-55, 1992.

Teoh, L.L. "Environmental Improvements for Minimills: Recent Developments and Future Trends", Environmental Control in the Steel Industry, International Iron and Steel Institute, Brussels, pp 3-131 through 3-154, 1992.

Nagasawa, T. and T. Kawaura. "Waste Water Control in the Japanese Iron and Steel Industry," Environmental Control in the Steel Industry, International Iron and Steel Institute, Brussels, pp. 4-5 through 4-17, 1992.

McGuire, T. E., et. al. "The Steel Industry and Hamilton Harbour - A Remedial Action Plan", Environmental Control in the Steel Industry, International Iron and Steel Institute, Brussels, pp. 4-42 to 4-61, 1992.

Copies of the papers contained in the Environmental Control in the Steel Industry can be obtained by writing to:

Secretary General
International Iron and Steel Institute
120, Rue Col. Bourg, B-1140
Brussels

Attachment C

Selected Papers on Pollution Control in the Iron and Steel Manufacturing Industry

NOTICE: This material may be protected by copyright law. (Title 17 U.S. Code)

Bengtsson, B., et. al. "Wastewater Treatment at Swedish Steel Mills", Journal Water Pollution Control Federation, Vol 47, No. 4, April, 1975. Reprinted with permission from Water Environment Federation.

Robertson, J. H., et. al. "Total Wastewater Control in a Large Integrated Steel Mill", Journal Water Pollution Control Federation, Vol. 51, No. 2., February, 1979. Reprinted with permission from Water Environment Federation.

Lu, W-K. "Recycling in Steel Plants and New Process Development", Recycling in the Steel Industry, Proceedings of the 1st Process Technology Conference, American Institute of Mining, Metallurgical, and Petroleum Engineers, Volume 1, pp. 23-31, March 25-26, 1980. Reprinted with permission from American Institute of Mining, Metallurgical and Petroleum Engineers.

Shinoda, Sakuei. "Total Raw Materials and Energy Recycling System of Newly Built Keihin Works", Recycling in the Steel Industry, Proceedings of the 1st Process Technology Conference, American Institute of Mining, Metallurgical, and Petroleum Engineers, Volume 1, pp 32-47, March 25-26, 1980. Reprinted with permission from American Institute of Mining, Metallurgical and Petroleum Engineers.

Pasztor, Laszlo. "Generation and Recycling of Pollution Control Residues in the Steel Industry", Recycling in the Steel Industry, Proceedings of the 1st Process Technology Conference, American Institute of Mining, Metallurgical, and Petroleum Engineers, Volume 1, pp. 48-54, March 25-26, 1980. Reprinted with permission from American Institute of Mining, Metallurgical and Petroleum Engineers.

Harris, Morley M. "The Use of Steel-Mill Waste Solids in Iron and Steelmaking", Recycling in the Steel Industry, Proceedings of the 1st Process Technology Conference, American Institute of Mining, Metallurgical, and Petroleum Engineers, Volume 1, pp. 62-71, March 25-26, 1980. Reprinted with permission from American Institute of Mining, Metallurgical and Petroleum Engineers.

Weidner, Thomas H. and John W. Kreiger. "Development and Application of the Green Pelletizing Process to Produce Agglomerates for BOF and Open Hearth Use", Recycling in the Steel Industry, Proceedings of the 1st Process Technology Conference, American Institute of Mining, Metallurgical, and Petroleum Engineers, Volume 1, pp. 72-76, March 25-26, 1980. Reprinted with permission from American Institute of Mining, Metallurgical and Petroleum Engineers.

Kaiser, F. T. and L. L. French. "Supplementary Hot Metal from Waste Oxides", Recycling in the Steel Industry, Proceedings of the 1st Process Technology Conference, American Institute of Mining, Metallurgical, and Petroleum Engineers, Volume 1, pp. 77-84, March 25-26, 1980. Reprinted with permission from American Institute of Mining, Metallurgical and Petroleum Engineers.

Eichberger, Heinz, et. al. "Production of Sponge Iron from Rolling Mill Scale According to the SL/RN Process", Recycling in the Steel Industry, Proceedings of the 1st Process Technology Conference, American Institute of Mining, Metallurgical, and Petroleum Engineers, Volume 1, pp. 104-108, March 25-26, 1980. Reprinted with permission from American Institute of Mining, Metallurgical and Petroleum Engineers.

Hunter, Rex A. "Technical Aspects of Waste Oil Reclamation", Recycling in the Steel Industry, Proceedings of the 1st Process Technology Conference, American Institute of Mining, Metallurgical, and Petroleum Engineers,

Volume 1, pp. 133-136, March 25-26, 1980. Reprinted with permission from American Institute of Mining, Metallurgical and Petroleum Engineers.

Ostrowski, Edward J. "Scrap Recycling in the Blast Furnace", Recycling in the Steel Industry, Proceedings of the 1st Process Technology Conference, American Institute of Mining, Metallurgical, and Petroleum Engineers, Volume 1, pp. 140-145, March 25-26, 1980. Reprinted with permission from American Institute of Mining, Metallurgical and Petroleum Engineers.

Jones, D. E. and S. J. Murrie. "Utilization of Steelplant Slag Products in Australia", Recycling in the Steel Industry, Proceedings of the 1st Process Technology Conference, American Institute of Mining, Metallurgical, and Petroleum Engineers, Volume 1, pp. 146-157, March 25-26, 1980. Reprinted with permission from American Institute of Mining, Metallurgical and Petroleum Engineers.

Piret, Jacques, et. al. "Experimental Road Built with BOF Slag at Cockerill-Seraing", Recycling in the Steel Industry, Proceedings of the 1st Process Technology Conference, American Institute of Mining, Metallurgical, and Petroleum Engineers, Volume 1, pp. 158-166, March 25-26, 1980. Reprinted with permission from American Institute of Mining, Metallurgical and Petroleum Engineers.

Saigusa, Makota, et. al. "Recycling of Converter Slag in Chiba Works", Recycling in the Steel Industry, Proceedings of the 1st Process Technology Conference, American Institute of Mining, Metallurgical, and Petroleum Engineers, Volume 1, pp. 168-171, March 25-26, 1980. Reprinted with permission from American Institute of Mining, Metallurgical and Petroleum Engineers.

Pargeter, John Kenneth and Harry Joseph Weil. "The INMETCO Process for Recovery of Metals from Steelmaking Wastes", Recycling in the Steel Industry, Proceedings of the 1st Process Technology Conference, American Institute of Mining, Metallurgical, and Petroleum Engineers, Volume 1, pp. 172-177, March 25-26, 1980. Reprinted with permission from American Institute of Mining, Metallurgical and Petroleum Engineers.

Hissel, J., et. al. "Pilot Study of a Caustic Soda Treatment Process for Reducing the Zinc and Lead Content of Waste Products from Iron- and Steel-Making Processes", Recycling in the Steel Industry, Proceedings of the 1st Process Technology Conference, American Institute of Mining, Metallurgical, and Petroleum Engineers, Volume 1, pp. 178-183, March 25-26, 1980. Reprinted with permission from American Institute of Mining, Metallurgical and Petroleum Engineers.

Harold, Derek S. "Development of a Deoiling Process for Recycling Millscale", Recycling in the Steel Industry, Proceedings of the 1st Process Technology Conference, American Institute of Mining, Metallurgical, and Petroleum Engineers, Volume 1, pp. 184-187, March 25-26, 1980. Reprinted with permission from American Institute of Mining, Metallurgical and Petroleum Engineers.

Attachment C (continued)

Selected Papers on Pollution Control in the Iron and Steel Manufacturing Industry

The following materials have no copyright restrictions.

U.S. EPA. Development Document for Effluent Limitations Guidelines and Standard for the Iron and Steel Manufacturing Point Source Category. Volumes I - IV, Effluent Guidelines Division, Office of Water Regulations and Standards, United States Environmental Protection Agency, EPA 440/1-82/024, May, 1982.

STEELMAKING SUBCATEGORY

SECTION III

INTRODUCTION

General Discussion

Steel is an alloy of iron which contains less than 1.0% carbon. Steelmaking is basically a process in which carbon, silicon, phosphorus, manganese, and other impurities present in the raw hot metal or steel scrap, are oxidized to specific minimum levels. The hot steel is then either teemed into ingots or transferred to a continuous casting or pressure casting operation for direct conversion into a semi-finished product (i.e., slabs, blooms, or billets).

The basic raw materials for the steelmaking processes are hot metal or pig iron, steel scrap, limestone, burned lime, dolomite, fluorspar, iron ores, and iron bearing materials such as pellets, mill scale, or BOF or open hearth waste solids. The infinite variety of steel metallurgical specifications are produced by adding alloying agents either to the hot steel charge in the furnace or to the ladle of steel after the hot steel is tapped from the furnace into a teeming ladle. The major steelmaking processes are Basic Oxygen Furnace (BOF), Open Hearth Furnace (OH), and Electric Arc Furnace (EAF). Figure III-1 illustrates the process sequences involved in steelmaking.

The large quantities of airborne gases, dusts, smoke, and iron oxide fumes generated in the steelmaking process are collected and contained by gas cleaning systems, some of which use water for the cooling, conditioning and scrubbing of these waste gases and fumes. Depending on the type of gas cleaning system used, wastewater discharges or sludge generation can result. The following segments of the major steelmaking processes were selected to reflect the distinctions in the wet gas cleaning system discharges:

BOF (Basic Oxygen Furnace)

- Semi-Wet
- Wet - Suppressed Combustion
- Wet - Open Combustion

OH (Open Hearth Furnace)

- Semi-Wet
- Wet

EAF (Electric Arc Furnace)

- Semi-Wet
- Wet

The semi-wet air pollution control systems use water to partially cool and condition the waste gases and fumes prior to final particulate removal in dry type collectors (i.e., precipitators or baghouses). The application of excess water for partial cooling and conditioning results in an aqueous discharge from these gas cleaning systems. Otherwise, zero discharge operations are possible.

Wet air pollution control systems use water not only to cool the waste gases but also to scrub the fume particulates from the waste gases. As a result of these water uses, wet gas cleaning systems discharge large volumes of wastewaters.

The wastewaters generated in the steelmaking process gas cleaning systems contain various pollutants which require treatment prior to discharge to receiving streams. This report reviews the characteristics and treatability of steelmaking process wastewaters, alternative treatment systems, and proposed effluent limitations for the steelmaking subcategory.

Data Collection Activities

To obtain process information and wastewater quality data, a total of twenty-three steelmaking plants (twelve BOF plants, four OH plants, and seven EAF plants) were visited and sampled. The effluent limitations promulgated in 1974 were based primarily upon data obtained through field sampling at eleven steelmaking plants. During the recent toxic pollutant survey, twelve additional steelmaking plants were sampled and one of the EAF plants sampled during the original survey was resampled. Table III-1 provides a summary of those steelmaking plants sampled during these surveys.

The general methodology and approach for soliciting data from the industry is described in Volume I. Through the DCP (basic questionnaire) responses, information regarding shop production capacities, modes of operation, applied and discharge flow data, and treatment facilities in use was provided for two hundred steelmaking plants. Tables III-2 through III-4 provide an inventory of the plants in each segment. Tables III-5 through III-10 summarize the data collected for each steelmaking segment.

In order to obtain additional data for long-term effluent quality, treatment costs, and other information, the Agency sent D-DCPs (detailed data questionnaires) to selected steelmaking operations. Responses were received for fourteen steelmaking plants (seven BOF plants, three OH plants, and four EAF plants).

Tables III-11 through III-17 summarize the data used in the development of this report.

Description of the Steelmaking Processes

A. Description of Basic Oxygen Furnace Operations

The basic oxygen furnace steelmaking process was introduced in the early 1950's and has become an important factor in the

manufacturing of steel products. Basic oxygen furnace (BOF) steelmaking involves the production of steel in pear-shaped, refractory lined, open mouth furnaces using a mixture of hot iron (2500°F), cold steel scrap, and fluxes. Fluxes, such as burnt lime (CaO), produce a slag which collects the impurities and floats on the surface of the molten steel. Oxygen is injected into the furnace at supersonic velocities (Mach 2) through a water cooled, copper tipped steel lance for approximately twenty-five minutes. The lance is lowered through the furnace mouth and positioned about 60 inches above the surface of the bath. The high velocity of the oxygen causes violent agitation and intimate mixing with the molten iron with the resultant rapid oxidation of iron and dissolved carbon, silicon, manganese, and phosphorous.

The carbon in the steel bath combines with the oxygen to produce CO_2 and CO which are released from the furnace. Silicon, manganese, phosphorous, and other impurities oxidize into the slag. In order to maintain a fluid slag, fluorspar (CaF_2) is added to the bath at a rate of about 8 to 16 lbs per ton of steel. In addition, approximately 150 lbs of burnt lime is added per ton of steel to aid in the production of a floating slag. Since the BOF steelmaking process is exothermic (heat generating) a certain percentage of steel scrap can be melted without the use of external fuels. Generally, the furnace charge ratio is about 70% hot metal to 30% cold scrap.

The basic oxygen furnace, supported on trunnions mounted in bearings, is rotated when hot metal or scrap are added. In addition, the furnace is rotated for the tapping (pouring) of steel into ladles and the dumping of slag into slag pots. The tap to tap time involved in BOF steelmaking is approximately 45 minutes, with generally half of the time used for blowing oxygen. A BOF shop is generally equipped with two furnaces but sometimes three or more furnaces may be found within one shop. In a dual furnace shop, one furnace is operated while the other is either being reheated or relined. Some BOF shops practice swing blowing in which one furnace is blown with oxygen, while the other furnace is charged with raw materials.

Several variations of the conventional Linz-Donowitz furnace are employed by steel plants in the United States. Two of the more significant variations are the Kaldo process and the Q-BOP furnace. The Kaldo process is basically the same as the conventional top blown process with the exception that the Kaldo furnace is mounted in an inclined position and rotated during oxygen blowing. At present, there is only one Kaldo installation in the United States. The Q-BOP or bottom blown oxygen steelmaking process introduces pure oxygen along with carrier gases (such as natural gas, propane, nitrogen), and powdered fluxes (such as burnt lime) to the furnace through tuyeres located in the furnace bottom. The tuyeres are located in that half of the furnace bottom which is covered by molten steel so that when the furnace is in the tilted tapping position they are not exposed to wear. The furnace bottom is designed as a

removable plug to allow for the easy replacement of the tuyeres. The addition of powdered fluxes through tuyeres prevents excessive slopping, and aids in the rapid formation of slag. Typical lime injection rates are on the order of five tons per minute. In this type of operation, oxygen is typically blown for ten to fifteen minutes. The Q-BOP furnace waste gas BTU content is somewhat higher than that of a conventional BOF due to the natural gas and propane content of the carrier gases. Because these fuel gases are added to the process, higher cold scrap charges can be used. The carrier gases also aid in cooling the tuyeres, thus minimizing wear. There are presently three Q-BOP installations in the United States.

The waste products from the basic oxygen steelmaking process include heat, airborne fluxes, slag, carbon monoxide and dioxide, and oxides of iron (FeO, Fe_2O_3, Fe_3O_4) emitted as submicron dust. Also, when the hot metal (iron) is poured into ladles or the furnace, submicron iron oxide fumes are released and some of the carbon in the iron is precipitated as graphite, commonly called "kish." Fumes and smoke are also released when the steel is poured from the furnace into steel holding (teeming) ladles. Approximately 1% to 2% of the ingot steel production is ejected as dust. All of these contaminants become airborne and thus, require removal. Basic oxygen furnaces are always equipped with air pollution control system for containing, cooling, and cleaning the huge volumes of hot gases and submicron fumes which are released in the process. Water is used to quench the off-gases to temperatures at which they can be effectively handled by the gas cleaning equipment.

During the oxygen blowing cycle, the primary gas constituent emitted from the BOF furnace is carbon monoxide (CO). The carbon monoxide gas (CO) will burn outside of the BOF furnace if allowed to come into contact with air. If outside air is prevented from coming into contact with the (CO) gas, combustion is retarded. This is referred to as suppressed combustion. Because the (CO) gas will burn when in contact with air, precipitators cannot be used due to the potential for an explosion as a result of arcing in the electric plates. Due to the hazards of explosions, suppressed combustion systems always use wet type scrubber systems.

Most BOF gas cleaning systems in use today furnish excess air for the burning of the CO gases. An open hood, mounted about 2 1/2 feet above the furnace mouth, is provided for the burning and conveying of gases and fumes to the air pollution control system. The hoods are made in several different geometric configurations (round, square, octagonal) and are either water cooled or used as waste heat, steam generating boilers. For the suppressed combustion system, the hood is mounted directly on top of the furnace. A section of the hood is retractable to provide access to the furnace for charging and pouring. The retractable hood can be adjusted to assure proper hood evacuation. The CO gas is then cleaned and burned at a flare stack, although provisions can

also be made to collect and store the CO gas for future use as fuel.

The wet-open combustion gas cleaning systems are designed to accommodate gases and fumes from only one operating BOF. For a two furnace shop, the gas cleaning system is swung back and forth to each furnace by means of motor operated valves in the off-take ductwork. For three furnace shops, two separate gas cleaning systems are generally provided. The wet-suppressed combustion gas cleaning systems are also designed to handle gases and fumes from only one operating BOF. However, in these systems, one gas cleaning system is provided for each furnace. The suppressed combustion gas cleaning systems are not swung back and forth, as with the open combustion systems, in order to prevent air leakage and possible explosion.

There are four principal types of gas cleaning systems currently used on BOF's: dry, semi-wet, wet-suppressed combustion systems, and wet-open combustion. The first BOF shops, installed during the late 1950s, used precipitators as the primary gas cleaning systems. These systems were either of the dry or semi-wet type. From 1962 to 1970, the conventional open combustion, wet Venturi scrubber systems were installed. The present suppressed combustion systems were introduced in 1965 and have become the current wet gas cleaning technology. Following is a description of these four gas cleaning systems.

In the design of precipitator systems, two approaches are used for quenching or cooling the furnace off-gases prior to precipitator cleaning. One approach provides an exact balance between water applied and water evaporated. As no wastewaters or sludges are discharged in this case, such a system is defined as a dry precipitator system. This design uses an evaporation chamber to cool the hot gases. The design of the evaporation chamber, which is two to three times larger than the spark box of the semi-wet gas cleaning systems, requires its installation at the top of the BOF building structure. In the semi-wet systems, an excess of water is supplied to a spark box to cool the furnace gases, thus resulting in a process wastewater discharge. The spark box design has the advantage of reduced initial capital costs, however, additional capital expenditures for water pollution control equipment are required. The particulate matter collected in both precipitator systems is discharged as a dry dust.

Wet gas cleaning systems generally use quenchers and high energy Venturi scrubbers. The hot, particulate laden gases generated by the BOF process first pass through a primary quencher, where the gases are cooled with water and the heavier particles carried by the gas stream are removed. The gases are then conveyed to the Venturi scrubbers for final cleaning. Water is applied to the scrubber to capture the particulates and the resulting process wastewater is then pumped to the primary quencher. The quencher wastewater discharge is subsequently delivered to a wastewater treatment facility.

Both open and suppressed combustion furnaces employ wet scrubber systems. The open combustion gas cleaning system requires a greater pressure drop across the scrubber throat than the suppressed combustion system because of the relative sizes of the particulate matter carried by the gas stream. The particulate matter generated in a suppressed combustion system is larger and easier to remove from the gas stream and thus does not require a greater pressure drop. The suppressed combustion system provides only incomplete combustion with the result that only larger sized particles are generated. On the other hand, open combustion systems allow for more complete combustion, due to the presence of excess air, with the result that smaller particles are generated. Because of the greater pressure drop required in the open combustion venturi, this system will, consequently, consume more energy than a suppressed combustion system. Figures III-2 through III-8 illustrate the various gas cleaning systems employed at basic oxygen furnace operations.

B. Description of Open Hearth Furnace Operations

The open hearth process is the oldest of the primary steelmaking processes, having been introduced in the United States as early as 1868. The first commercial production of steel by this process began in 1888. The open hearth furnace became the primary method of making steel in the United States and reached its peak during the 1960s. Since that time, however, the use of open hearth furnaces has declined as a result of the development of the basic oxygen and electric arc furnaces.

The open hearth process produces steel in a shallow rectangular refractory basin, or hearth, enclosed by refractory lined walls and roof. The furnace front wall is furnished with water cooled, lined doors through which raw materials are charged into the furnace. A plugged tap hole at the base of the wall opposite to the doors is provided to tap the finished molten steel into ladles. Open hearth furnaces can use an all scrap steel charge; however, a 50% hot metal/50% steel scrap charge is typically used.

Fuel, oil, coke oven gas, natural gas, pitch, creosote, or tar is burned at one end of the hearth to generate heat for the melting of scrap and the production of steel. The type of fuel used depends upon plant economics and the availability of fuel. The hot gases resulting from the refining process and from fuel combustion travel the length of the hearth above the raw material charge, and are then conducted downward through a flue to a regenerative brick chamber called "checkerwork" or "checkers." These brick masses absorb heat, thereby cooling the waste gases to approximately 750°C to 850°C. The combustion system burners, checkers, and flues are duplicated at each end of the furnace thus permitting frequent and systematic reversal of the flue gas and combustion air flows. A system of valves in the flues effects the gas reversal, so that heat stored in the checkers is used to preheat the incoming furnace combustion air. Some plants

convey the gases leaving the checkers through waste heat boilers to further reduce the waste gas temperature to 260°C to 315°C.

There are two principal types of open hearth furnaces: acid and basic. Where the basin refractory material is composed of silica sand, the furnace is termed an "acid" furnace. A furnace whose basin is lined with dolomite or magnesite is termed a "basic" furnace. The basic open hearth process is generally used in the United States because of its capacity to remove phosphorous and sulfur from iron and its ores. The acid furnace on the other hand, tolerates only minimal amounts of these elements and can use only selected raw materials. Open hearth furnaces are often grouped to form a shop with each furnace operating independently. One furnace in a shop is usually down (out of operation) for relining and other maintenance work. Steelmaking heats are scheduled in conjunction with down times in order to maintain the continuity of shop production.

The open hearth cycle is comprised of several stages, including fettling, charging, meltdown, hot metal addition, ore and lime boil, refining, tapping and delay. The period of time between tap and start, called "fettling," is spent in making repairs to the hearth and plugging the tap hole used in the previous heat. During the charging period, the solid raw materials such as pig iron, iron ore, limestone, and scrap iron and steel are dumped into the furnace by special charging machines. The melting period begins when the first scrap has been charged. The direction of the gas flow is then reversed every 15 to 20 minutes. When the solid material has melted, a charge of hot metal is put into the furnace. This is normal procedure for a "hot-metal" furnace, but in the case of a "cold metal" furnace, solid materials are usually added in two batch charges. The hot metal addition is followed by the "ore boil" and then the "lime boil" (caused by oxidized gases rising to the surface of the molten metal). Carbon monoxide is generated as a result of the oxidation of carbon and is released during the "ore boil." When carbon dioxide is released in the calcination of the limestone, the turbulence is called "lime boil." The refining period is used to lower the phosphorous and sulfur content of the steel to specified levels, to eliminate carbon, to allow time for proper conditioning of the slag and to attain proper bath temperature. At of the end the working period, the furnace is tapped, at which time the bath temperature is approximately 1,650°C. Typical tap to tap time for the production of steel in an open hearth furnace is normally eight to twelve hours. Sometimes pure oxygen is lanced over the steel bath to hasten the oxidation or refining cycle thereby reducing the tap to tap time to five to eight hours.

The waste products which result from the open hearth process are slag, oxides of iron ejected as submicron dust, waste gases (composed of air, carbon dioxide, and water vapor), oxides of sulfur and nitrogen (due to the nature of certain fuels being burned), and oxides of zinc (if galvanized steel scrap is used). Fluorides may be emitted from open hearth furnaces both as

gaseous and particulate matter. In most instances, the source of fluoride is fluorspar (CaF_2), which is used during the final stage of the heat. Iron oxide fumes or dust is generated at the rate of 25 lbs/ton of steel. Gas and dust generation is fairly constant throughout the heat cycle except during oxygen lancing, when the gas and dust generation rates are highest.

Most of the particulate emissions from open hearth furnaces are iron oxides (predominantly Fe_2O_3). Fume generation rates are dependent upon the type of scrap used (i.e., galvanized), and the oil and dirt content of the scrap. Tests performed on open hearth furnaces indicate that the peak fume generation rates occur at the end of charging for a cold metal furnace and just after scrap addition for a hot metal furnace. Fume generation rates during oxygen lancing are approximately three times greater than that of typical operations. Also, the blowing of the

particulates and cool the gases. The resulting wastewater effluent is subsequently discharged to a wastewater treatment facility. One open hearth shop uses a unique type of scrubber referred to as a "hydroscrubber." In this system, steam is used as the driving force for evacuating the gases from the furnace and also to clean of these gases. The steam is generated by a waste heat boiler located in the furnace shop.

Figures III-9 through III-11 illustrate the gas cleaning systems described above.

C. Description of Electric Arc Furnace Operations

The electric arc steelmaking process was introduced in the United States as early as 1878 and has since become one of the three principal methods of raw steel production. Commercial production of steel by this method began in 1899 and has since been steadily increasing. Until recently, electric arc furnaces (EAFs) had been used primarily for the production of alloy steels. However, EAFs are now used to produce a wide range of carbon and specialty steels.

The electric arc furnace steelmaking process produces high quality and alloy steels in refractory lined cylindrical furnaces using a cold steel scrap charge and fluxes. In some instances, a portion of hot metal or a lower grade of steel, produced in the basic oxygen or open hearth furnace, will be charged to the electric furnace. This procedure is referred to as duplexing. The heat for melting the furnace charge, and fluxes, is furnished by passing an electric current (arcing) through the scrap or steel bath between three cylindrical carbon electrodes, arranged in a triangle, which are inserted through the furnace roof. The electrodes are consumable and oxidize at a rate of 10 to 16 lbs/ton of steel. Larger tonnage furnaces have hinged removable roofs for scrap addition while smaller furnaces receive the charge through furnace doors. Furnaces range in capacity from 18 to 365 kkg (20 to 400 ton) heats and in size from 2 to 9 meters in diameter. The heat cycle time is generally four to five hours.

The production of some high quality steels requires the use of two different slags for the same heat (referred to as oxidizing and reducing slags). After removing the first slag from the furnace, new fluxes are added to produce the second slag. While the reducing slag is being formed, a slight positive pressure (with respect to atmospheric pressure) must be maintained in the furnace to prevent the infiltration of air or further oxidation of the steel. The heat cycle generally consists of the charging, meltdown, oxidizing, refining and tapping (pouring) steps. Pure oxygen is sometimes lanced across the bath to hasten the oxidation cycle which in turn reduces electrical power consumption.

A new process for refining alloy and stainless steels, the "AOD" or Argon Oxygen Decarburization process, was introduced in the

early 1970s and has been used in conjunction with electric arc furnaces. The AOD furnace is similar in shape to a BOF vessel and generally handles a charge of 50 to 150 tons of hot steel. When the electric furnace is used in conjunction with AOD furnaces, the electric arc furnaces become carbon steel scrap melters. The hot metal charge is then transferred to the AOD process for final refining. This eliminates the double slag process used when electric arc furnaces are producing stainless and alloy steels. The AOD process allows for better control of the alloy steel composition as well as higher use of alloying agents such as ferrous chromium.

In the AOD process argon is injected through tuyeres in the AOD vessel bottom to refine the molten metal. Fluxes are added for the purpose of slag generation in the refining processes. The off-gases from the AOD vessel are conducted through hoods to baghouses where the particulates carried by the gas stream are removed. Hoods mounted above the AOD vessel mouth capture any fumes emitted. Generally, baghouse collectors are used as gas cleaning equipment, although at one plant, the off-gases are routed to the electric arc furnace wet fume scrubber system.

The waste products from the electric arc furnace process are smoke, slag, carbon monoxide and dioxide, and metal oxides (mainly iron) emitted as submicron fume. Other waste contaminants such as zinc oxides from galvanized scrap may be released depending upon the type and quality of scrap used. Oil bearing scrap will yield heavy reddish-black smoke as the oils are burned off at the start of the meltdown cycle. Nitrogen oxides and ozone are released during the arcing of electrodes. Generally, 10 lbs of dust/ton of steel is expected, but as much as 30 lbs of dust/ton of steel may be released if inferior scrap is used. To exhaust the fumes produced in an electric arc furnace, one of five different methods is generally used. These methods are:

1. Plant rooftop or furnace building extraction
2. Local fume hoods
3. Water cooled roof elbow
4. Fourth hole extraction
5. Total furnace enclosed extraction or "snuff box."

The plant roof top or building extraction method entails the sealing of the shop building and the installation of exhaust hoods in roof trusses. Huge volumes of air are exhausted with this system (1,300,000 cubic feet per minute for a shop consisting of five 50-ton furnaces). This system is readily adaptable to existing electric arc furnace shops using the double slagging practice and it captures most of the fugitive emissions from the other furnace operations such as tapping, or slagging. A baghouse collector is normally used to clean the exhaust gases in this system. As these systems are designed to clean the fumes from an entire furnace shop, adequate quantities of cooling air are introduced to the system to maintain proper temperatures. There is no wastewater discharge from this type of system.

The second type of furnace exhaust involves the use of local exhaust hoods fitted adjacent to door openings, electrode openings, and around junctures between the roof and the furnace shell. Fume, smoke, and gases are captured as they bleed through the furnace openings and enough cool air is drawn into the system so that the hot gases are tempered. A baghouse collector is also used with this system with the result that no process wastewaters are generated.

Water cooled roof elbows are generally tightly fitted to the furnace roofs and the hot gases are exhausted from the furnace interior through the cooled elbow. A combustion air space between the water cooled elbow and the gas cleaning ductwork provides combustion air for any carbon monoxide gases emitted from the furnace. As combustion results in high gas temperatures (approximately 1650°F), the gases must be water quenched or air cooled before entering the gas cleaning equipment. If spray chambers are used for quenching, a wastewater effluent is discharged.

The fourth hole extraction method is similar to water cooled elbows, except another hole, in addition to the three holes for the electrodes, is located in the furnace rooftop. A space between the ductwork and the fourth hole allows for the combustion of the gases. The gases are withdrawn from the furnace by suction through the fourth hole.

Baghouse collectors, precipitators or scrubbers are used for both the water cooled elbows and fourth hole extraction systems. If precipitators are used as the gas cleaning equipment, the hot off-gases from the furnaces have to be cooled to about 280°C in order for the precipitators to function. Higher temperatures could damage the precipitator. If baghouse fabric collectors are used, the off-gases must be cooled to 120°C as bag fabrics cannot withstand higher temperatures. Only fiberglass bags can withstand higher temperatures (400°C), however, these bags are more fragile. Spray chambers are used in conjunction with baghouses to assure proper cooling of the gases. If high energy Venturi scrubbers are used, the gases are quenched to their saturation temperature in quenchers located near the furnace.

Some electric arc furnace shops use long lengths of exhaust ductwork which act as heat exchangers. The hot gases are thus cooled by radiation of heat through the bare ductwork. Some shops use a similar cooling system called hairpin cooling heat exchangers. This method is generally used for the lower gas volumes of smaller furnace shops. One electric furnace shop, Plant 0528A, uses a spark box coupled with gas washers and disintegrators for wet cleaning of the off-gases.

The fifth gas collection method, "snuff box," encloses the entire furnace and exhausts the fumes through ductwork. The charging of scrap, and other material is accomplished by overhead cranes passing through automatic sliding doors in the enclosure around the furnace. This system can be used with Venturi scrubbers,

precipitators or baghouses. In comparison to rooftop extraction, the "snuff box" allows for a greater reduction in exhausted gas volumes. Also, this system exhausts most of the fume emitted from the entire electric arc furnace, including the fume emitted during tapping.

The removal of the particulate matter carried by the gas stream is accomplished in one of the three basic gas cleaning systems the dry, the semi-wet, and wet.

Dry gas cleaning systems are generally of two types, i.e., baghouses and electrostatic precipitators. A baghouse consists of a series of cloth or fiberglass bags which filter the water cooled furnace gases. The furnace gases are first quenched by water sprays in a spray chamber and are then introduced to the baghouse. Depending upon the type of baghouse, the dust transported by the gas stream collects either on the inside or on the outside of the filter bag. The bags are periodically shaken free of the dust which is then collected in hoppers located at the bottom of the baghouse structure. The dry dust thus collected is removed and landfilled. Another dry gas cleaning system uses the electrostatic precipitator. This system uses electrically charged metal plates to capture the charged particulate matter carried by the gas stream. As in the baghouse method, the gases must be water cooled prior to precipitator cleaning. Cooling of the furnace gases is accomplished in an evaporation chamber. The dust captured by the electrostatic precipitator is collected in a hopper and conveyed to a landfill. Neither of these gas cleaning systems results in a process wastewater or sludge discharge and, therefore, these systems do not require any water pollution control equipment.

The semi-wet system also involves the use of electrostatic precipitators, however, process wastewaters are generated. This system uses water to cool the furnace gases in a spark box chamber, which is about one- third the size of the evaporation chamber used for a dry system. An excess of water is supplied to the spark box to insure adequate cooling and, consequently, process wastewaters are discharged from the system. The spark box design has the advantage of reduced initial capital costs, however, additional capital expenditures for water pollution control are required.

Wet gas cleaning systems generally use high energy Venturi scrubbers. The hot, particulate laden gases from the furnace are conveyed to Venturi scrubbers for cooling and cleaning. Water is supplied to the scrubber to capture the particulates and to cool the gases. The wastewaters generated in this system are then discharged to a treatment facility.

Figures III-12 through III-15 illustrate some of the variations of gas cleaning systems employed in electric arc furnace shops.

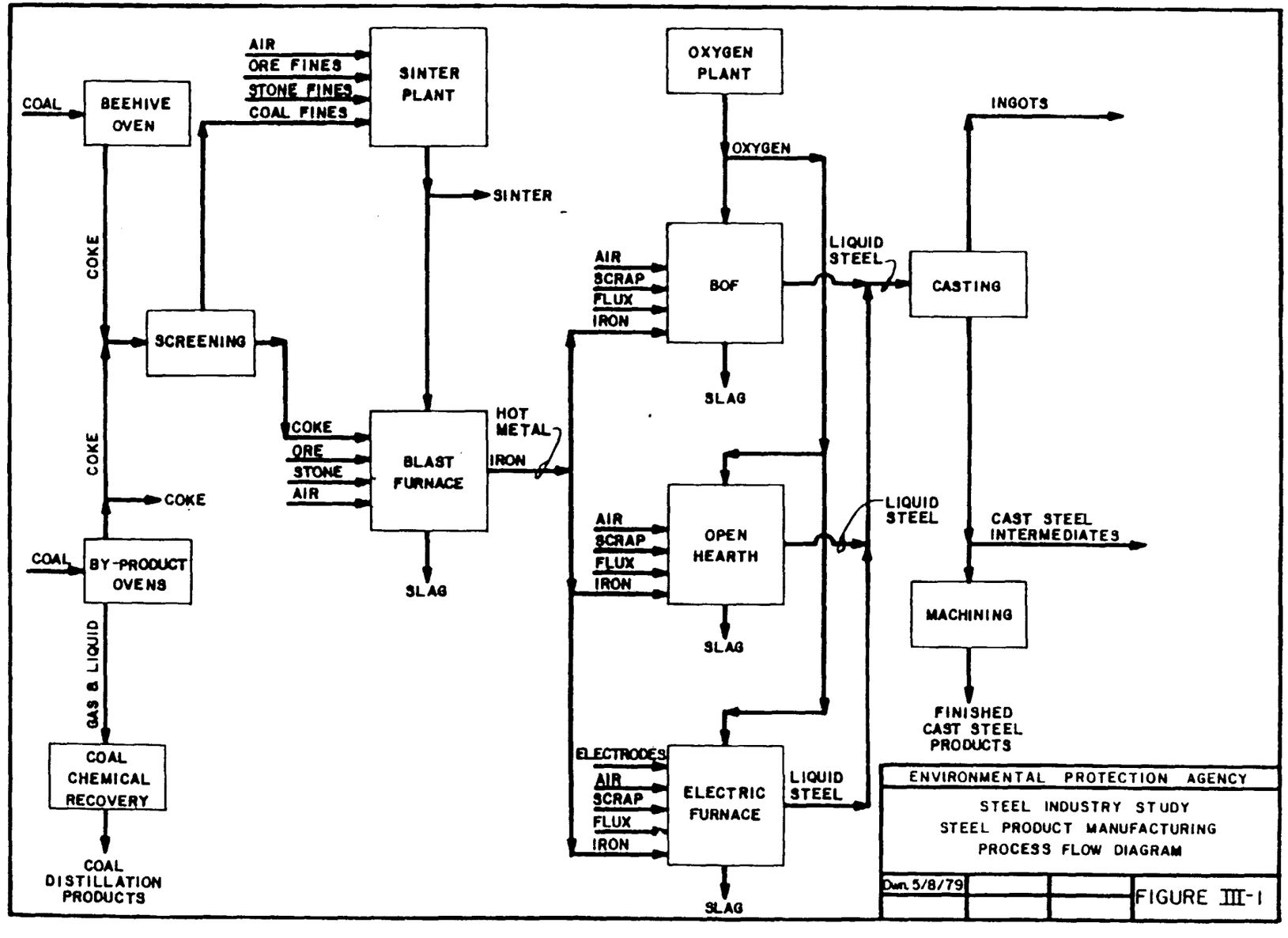
COAL
BEEHIVE OVEN
COKE
COKE
COKE
SCREENING
AIR
ORE FINES
STONE FINES
COAL FINES
SINTER PLANT
SINTER
COKE
ORE
STONE
AIR
BLAST FURNACE
SLAG
HOT METAL
IRON
COAL
BY-PRODUCT OVENS
GAS & LIQUID
COAL CHEMICAL RECOVERY
COAL DISTILLATION PRODUCTS
OXYGEN PLANT
OXYGEN
AIR
SCRAP
FLUX
IRON
BOF
SLAG
LIQUID STEEL
AIR
SCRAP
FLUX
IRON
OPEN HEARTH
SLAG
LIQUID STEEL
ELECTRODES
AIR
SCRAP
FLUX
IRON
ELECTRIC FURNACE
SLAG
LIQUID STEEL
CASTING
INGOTS
CAST STEEL INTERMEDIATES
MACHINING
FINISHED CAST STEEL PRODUCTS
ENVIRONMENTAL PROTECTION AGENCY
STEEL INDUSTRY STUDY
STEEL PRODUCT MANUFACTURING
PROCESS FLOW DIAGRAM
Dwn. 5/8/79
FIGURE III-1

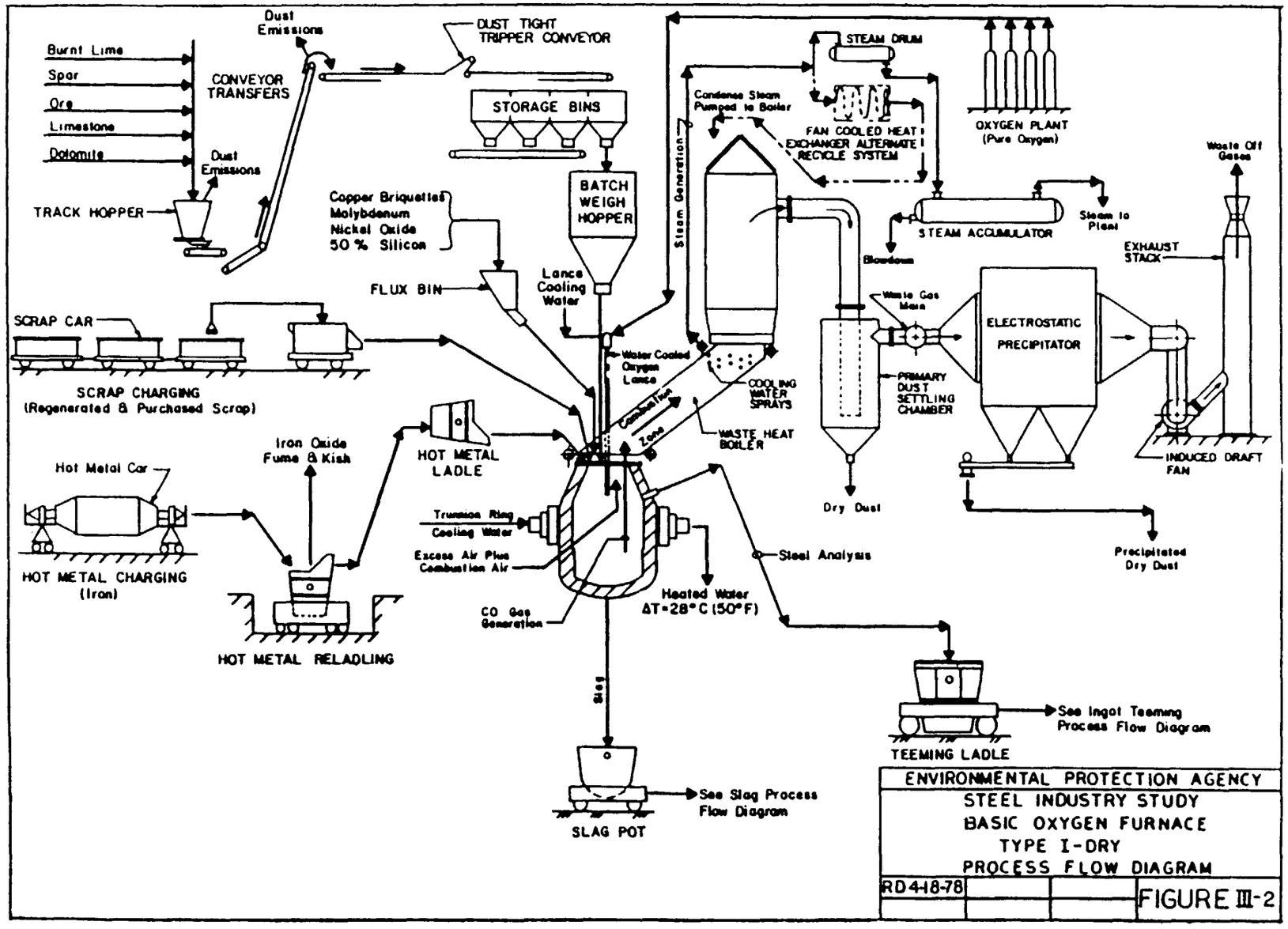

ENVIRONMENTAL PROTECTION AGENCY

STEEL INDUSTRY STUDY
BASIC OXYGEN FURNACE
TYPE I-DRY
PROCESS FLOW DIAGRAM

RD 4-18-78

FIGURE III-2

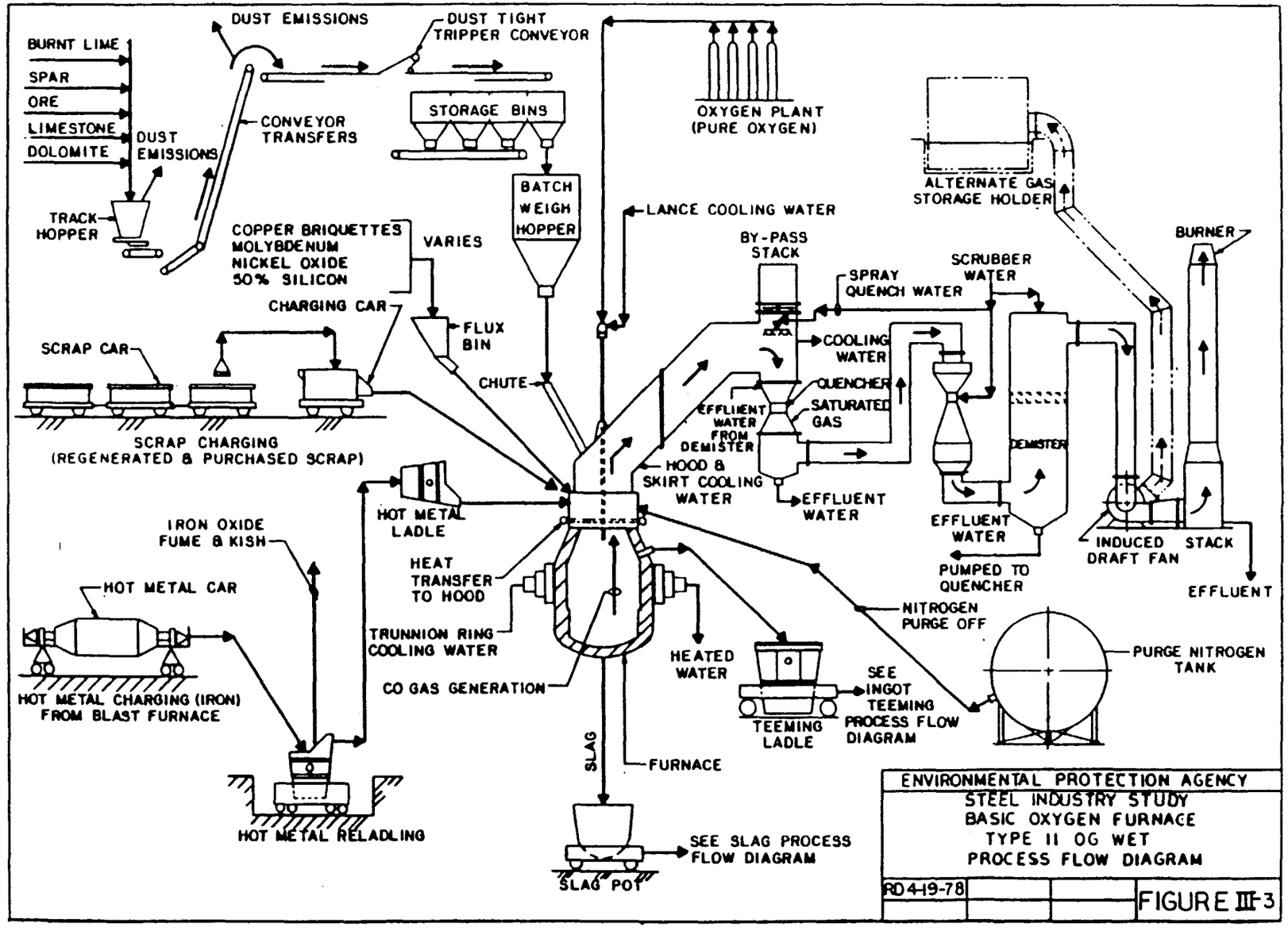
BURNT LIME
SPAR
ORE
LIMESTONE
DOLOMITE
DUST EMISSIONS
TRACK HOPPER
DUST EMISSIONS
CONVEYOR TRANSFERS
DUST TIGHT TRIPPER CONVEYOR
STORAGE BINS
BATCH WEIGH HOPPER
OXYGEN PLANT (PURE OXYGEN)
ALTERNATE GAS STORAGE HOLDER
LANCE COOLING WATER
COPPER BRIQUETTES
MOLYBDENUM
NICKEL OXIDE
50% SILICON
VARIES
CHARGING CAR
FLUX BIN
SCRAP CAR
CHUTE
SCRAP CHARGING (REGENERATED & PURCHASED SCRAP)
BY-PASS STACK
SPRAY QUENCH WATER
SCRUBBER WATER
BURNER
COOLING WATER
QUENCHER
SATURATED GAS
EFFLUENT WATER FROM DEMISTER
DEMISTER
HOOD & SKIRT COOLING WATER
EFFLUENT WATER
EFFLUENT WATER
PUMPED TO QUENCHER
INDUCED DRAFT FAN
STACK
EFFLUENT
HOT METAL LADLE
IRON OXIDE FUME & KISH
HEAT TRANSFER TO HOOD
HOT METAL CAR
TRUNNION RING COOLING WATER
NITROGEN PURGE OFF
PURGE NITROGEN TANK
HOT METAL CHARGING (IRON) FROM BLAST FURNACE
CO GAS GENERATION
HEATED WATER
SEE INGOT TEEMING PROCESS FLOW DIAGRAM
TEEMING LADLE
SLAG
FURNACE
HOT METAL RELADLING
SEE SLAG PROCESS FLOW DIAGRAM
SLAG POT
ENVIRONMENTAL PROTECTION AGENCY
STEEL INDUSTRY STUDY
BASIC OXYGEN FURNACE
TYPE II OG WET
PROCESS FLOW DIAGRAM
RD 4-19-78
FIGURE III-3

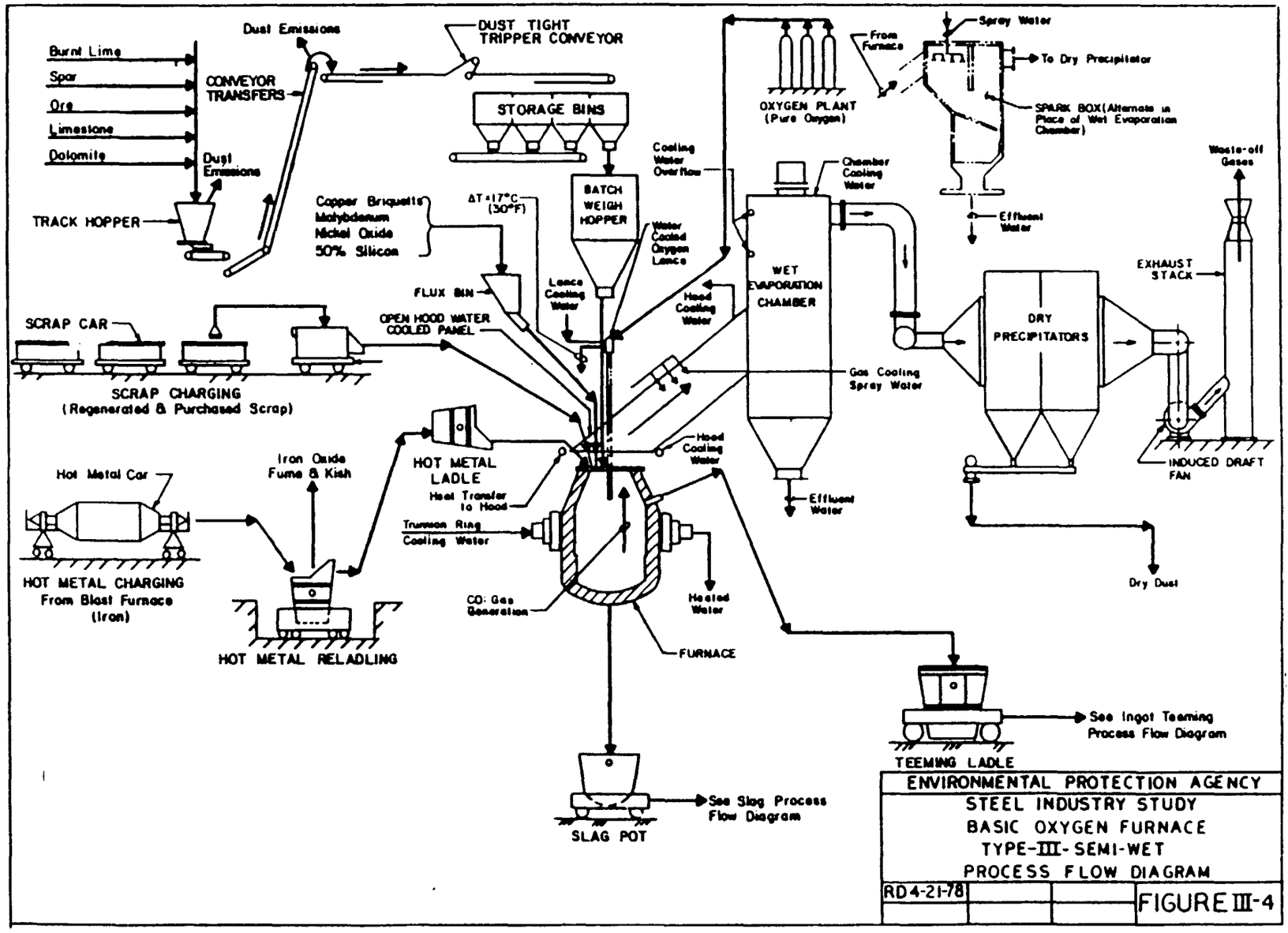
Burnt Lime
Spar
Ore
Limestone
Dolomite
Dust Emissions
CONVEYOR TRANSFERS
TRACK HOPPER
Dust Emissions
DUST TIGHT TRIPPER CONVEYOR
STORAGE BINS
BATCH WEIGH HOPPER
Copper Briquetts
Molybdenum
Nickel Oxide
50% Silicon
ΔT=17°C (30°F)
FLUX BIN
Lance Cooling Water
Water Cooled Oxygen Lance
OPEN HOOD WATER COOLED PANEL
SCRAP CAR
SCRAP CHARGING
(Regenerated & Purchased Scrap)
Hot Metal Car
HOT METAL CHARGING
From Blast Furnace
(Iron)
Iron Oxide Fume & Kish
HOT METAL RELADLING
HOT METAL LADLE
Heat Transfer to Hood
Trunnion Ring Cooling Water
CO: Gas Generation
Heated Water
FURNACE
Hood Cooling Water
Hood Cooling Water
Cooling Water Overflow
OXYGEN PLANT
(Pure Oxygen)
Chamber Cooling Water
WET EVAPORATION CHAMBER
Gas Cooling Spray Water
Effluent Water
From Furnace
Spray Water
To Dry Precipitator
SPARK BOX (Alternate in Place of Wet Evaporation Chamber)
Effluent Water
DRY PRECIPITATORS
Dry Dust
Waste-off Gases
EXHAUST STACK
INDUCED DRAFT FAN
TEEMING LADLE
See Ingot Teeming Process Flow Diagram
SLAG POT
See Slag Process Flow Diagram
ENVIRONMENTAL PROTECTION AGENCY
STEEL INDUSTRY STUDY
BASIC OXYGEN FURNACE
TYPE-III-SEMI-WET
PROCESS FLOW DIAGRAM
RD 4-21-78
FIGURE III-4

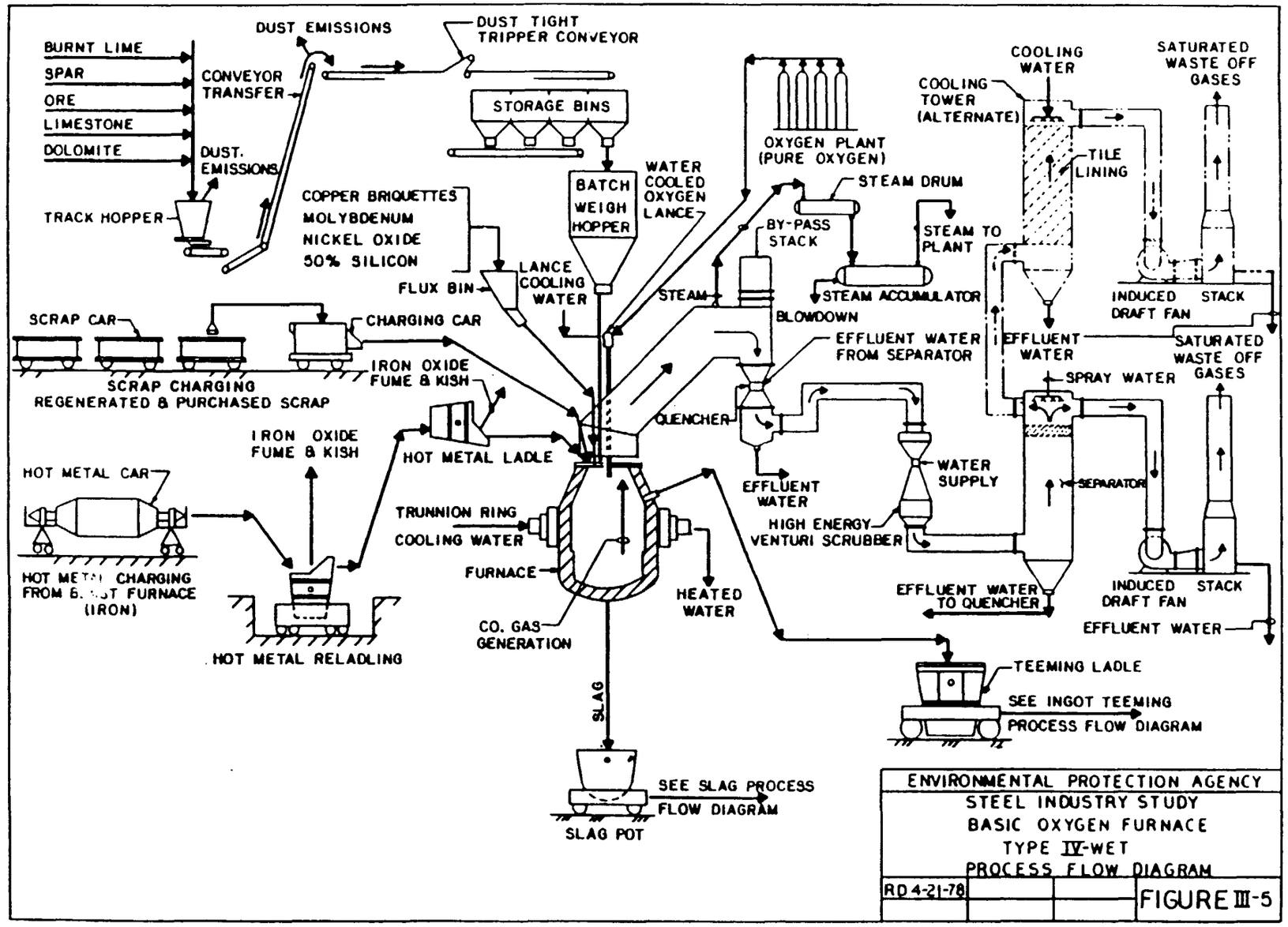
BURNT LIME
SPAR
ORE
LIMESTONE
DOLOMITE
TRACK HOPPER
CONVEYOR TRANSFER
DUST. EMISSIONS
DUST EMISSIONS
DUST TIGHT TRIPPER CONVEYOR
STORAGE BINS
BATCH WEIGH HOPPER
COPPER BRIQUETTES
MOLYBDENUM
NICKEL OXIDE
50% SILICON
FLUX BIN
LANCE COOLING WATER
WATER COOLED OXYGEN LANCE
OXYGEN PLANT (PURE OXYGEN)
STEAM DRUM
BY-PASS STACK
STEAM TO PLANT
STEAM
STEAM ACCUMULATOR
BLOWDOWN
EFFLUENT WATER FROM SEPARATOR
COOLING WATER
COOLING TOWER (ALTERNATE)
TILE LINING
SATURATED WASTE OFF GASES
INDUCED DRAFT FAN
STACK
EFFLUENT WATER
SATURATED WASTE OFF GASES
SPRAY WATER
SEPARATOR
SCRAP CAR
CHARGING CAR
SCRAP CHARGING
REGENERATED & PURCHASED SCRAP
IRON OXIDE FUME & KISH
HOT METAL LADLE
QUENCHER
EFFLUENT WATER
WATER SUPPLY
HIGH ENERGY VENTURI SCRUBBER
EFFLUENT WATER TO QUENCHER
INDUCED DRAFT FAN
STACK
EFFLUENT WATER
IRON OXIDE FUME & KISH
HOT METAL CAR
HOT METAL CHARGING FROM BLAST FURNACE (IRON)
HOT METAL RELADLING
TRUNNION RING
COOLING WATER
FURNACE
CO. GAS GENERATION
HEATED WATER
SLAG
SLAG POT
SEE SLAG PROCESS FLOW DIAGRAM
TEEMING LADLE
SEE INGOT TEEMING PROCESS FLOW DIAGRAM
ENVIRONMENTAL PROTECTION AGENCY
STEEL INDUSTRY STUDY
BASIC OXYGEN FURNACE
TYPE IV-WET
PROCESS FLOW DIAGRAM
RD 4-21-78
FIGURE III-5

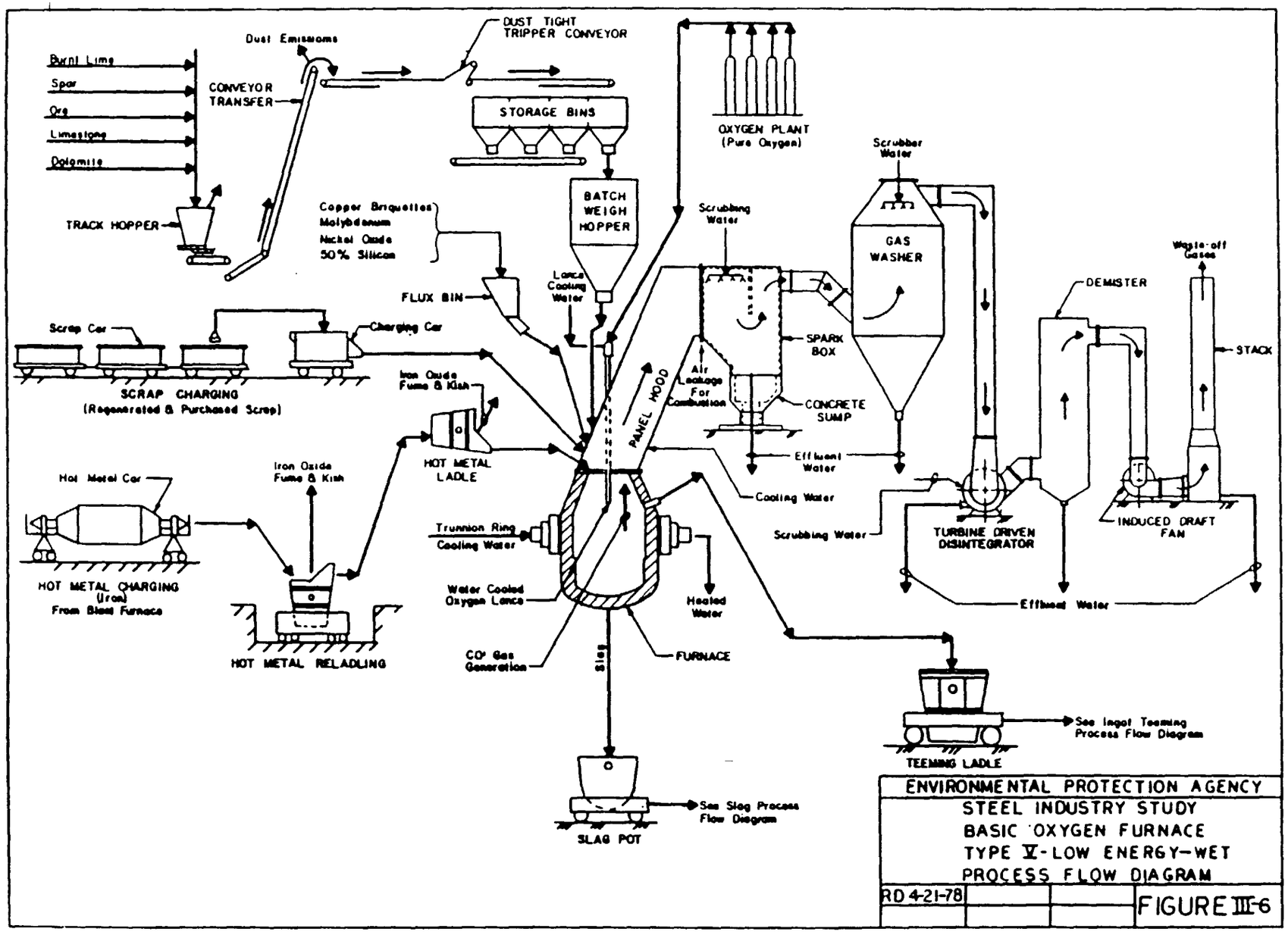

ENVIRONMENTAL PROTECTION AGENCY
STEEL INDUSTRY STUDY
BASIC OXYGEN FURNACE
TYPE V - LOW ENERGY - WET
PROCESS FLOW DIAGRAM

RD 4-21-78

FIGURE III-6

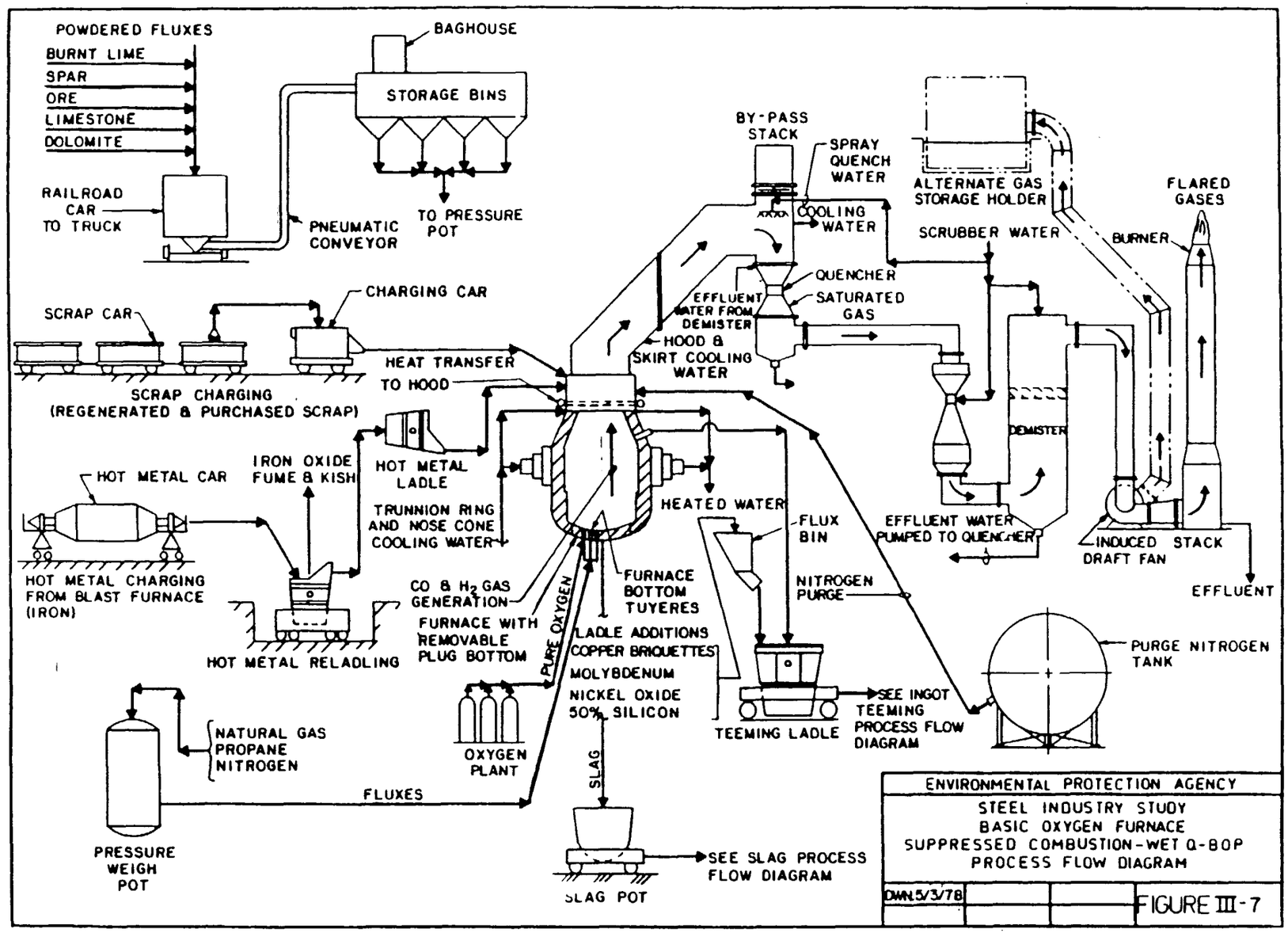
POWDERED FLUXES
BURNT LIME
SPAR
ORE
LIMESTONE
DOLOMITE
BAGHOUSE
STORAGE BINS
RAILROAD CAR TO TRUCK
PNEUMATIC CONVEYOR
TO PRESSURE POT
BY-PASS STACK
SPRAY QUENCH WATER
COOLING WATER
ALTERNATE GAS STORAGE HOLDER
FLARED GASES
SCRUBBER WATER
BURNER
QUENCHER
SATURATED GAS
EFFLUENT WATER FROM DEMISTER
HOOD & SKIRT COOLING WATER
CHARGING CAR
SCRAP CAR
HEAT TRANSFER TO HOOD
SCRAP CHARGING (REGENERATED & PURCHASED SCRAP)
DEMISTER
IRON OXIDE FUME & KISH
HOT METAL LADLE
HOT METAL CAR
TRUNNION RING AND NOSE CONE COOLING WATER
HEATED WATER
FLUX BIN
EFFLUENT WATER PUMPED TO QUENCHER
INDUCED DRAFT FAN
STACK
EFFLUENT
HOT METAL CHARGING FROM BLAST FURNACE (IRON)
CO & H_2 GAS GENERATION
FURNACE WITH REMOVABLE PLUG BOTTOM
PURE OXYGEN
FURNACE BOTTOM TUYERES
NITROGEN PURGE
LADLE ADDITIONS
COPPER BRIQUETTES
MOLYBDENUM
NICKEL OXIDE
50% SILICON
HOT METAL RELADLING
PURGE NITROGEN TANK
SEE INGOT TEEMING PROCESS FLOW DIAGRAM
TEEMING LADLE
NATURAL GAS
PROPANE
NITROGEN
OXYGEN PLANT
SLAG
FLUXES
PRESSURE WEIGH POT
SEE SLAG PROCESS FLOW DIAGRAM
SLAG POT
ENVIRONMENTAL PROTECTION AGENCY
STEEL INDUSTRY STUDY
BASIC OXYGEN FURNACE
SUPPRESSED COMBUSTION-WET Q-BOP
PROCESS FLOW DIAGRAM
DWN 5/3/78
FIGURE III-7

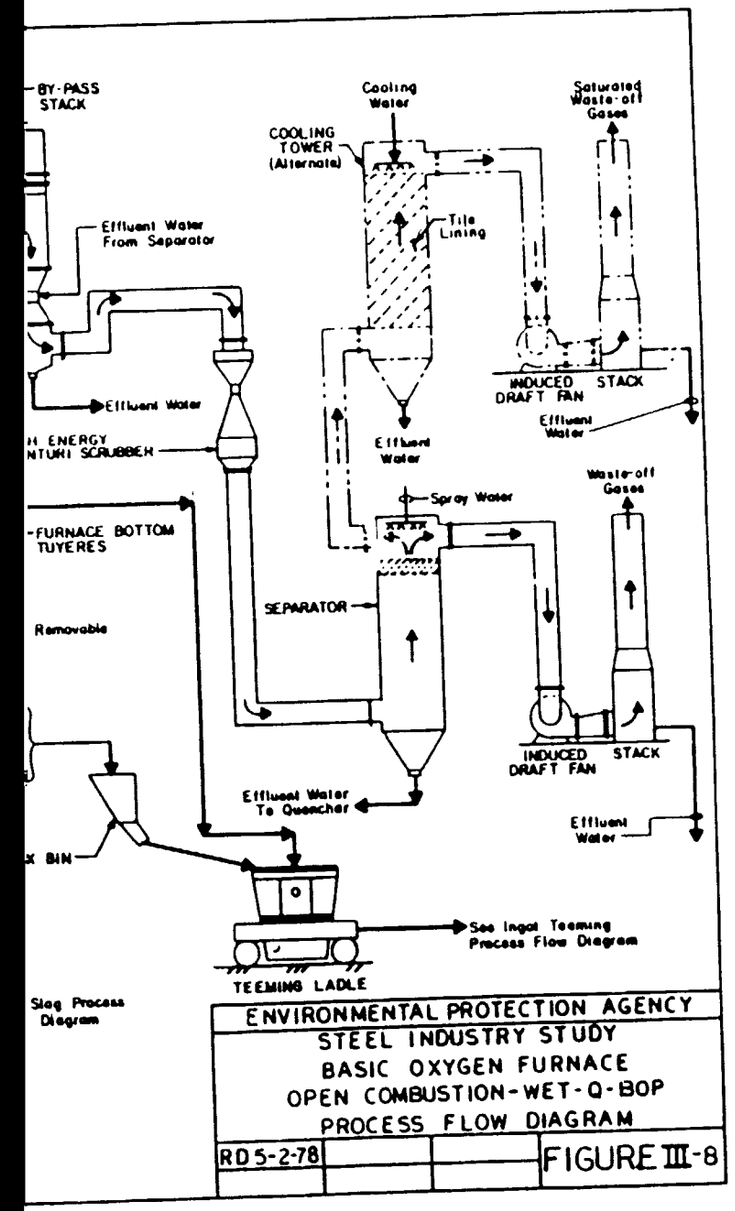
-BY-PASS STACK
Cooling Water
Saturated Waste-off Gases
COOLING TOWER (Alternate)
Tile Lining
Effluent Water From Separator
INDUCED DRAFT FAN
STACK
Effluent Water
Effluent Water
H ENERGY NTURI SCRUBBER
Effluent Water
Waste-off Gases
Spray Water
-FURNACE BOTTOM TUYERES
SEPARATOR
Removable
INDUCED DRAFT FAN
STACK
Effluent Water To Quencher
Effluent Water
X BIN
See Ingot Teeming Process Flow Diagram
TEEMING LADLE
Slag Process Diagram
ENVIRONMENTAL PROTECTION AGENCY
STEEL INDUSTRY STUDY
BASIC OXYGEN FURNACE
OPEN COMBUSTION-WET-Q-BOP
PROCESS FLOW DIAGRAM
RD 5-2-78
FIGURE III-8

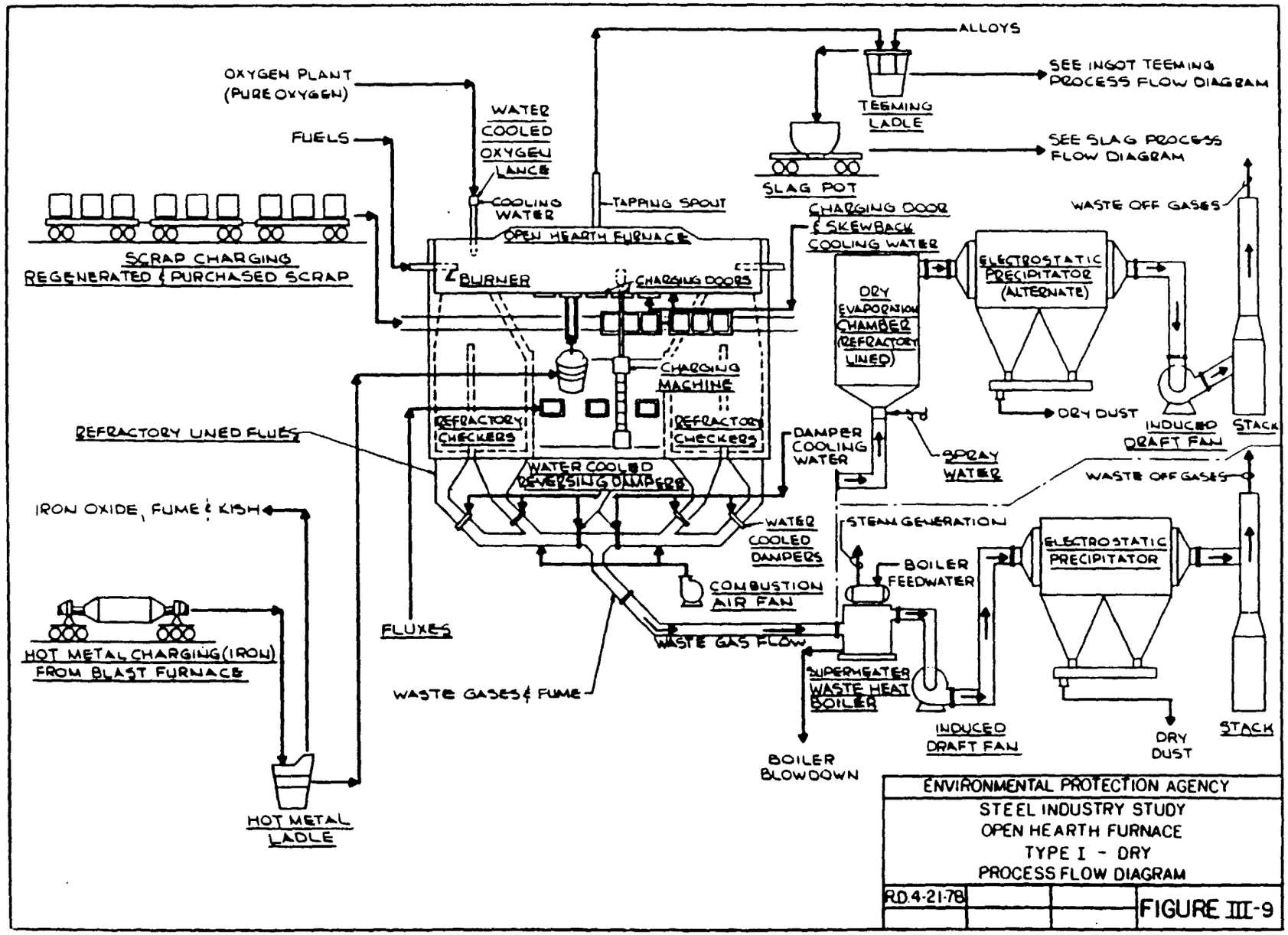

ENVIRONMENTAL PROTECTION AGENCY

STEEL INDUSTRY STUDY
OPEN HEARTH FURNACE
TYPE I - DRY
PROCESS FLOW DIAGRAM

RD 4-21-78

FIGURE III-9

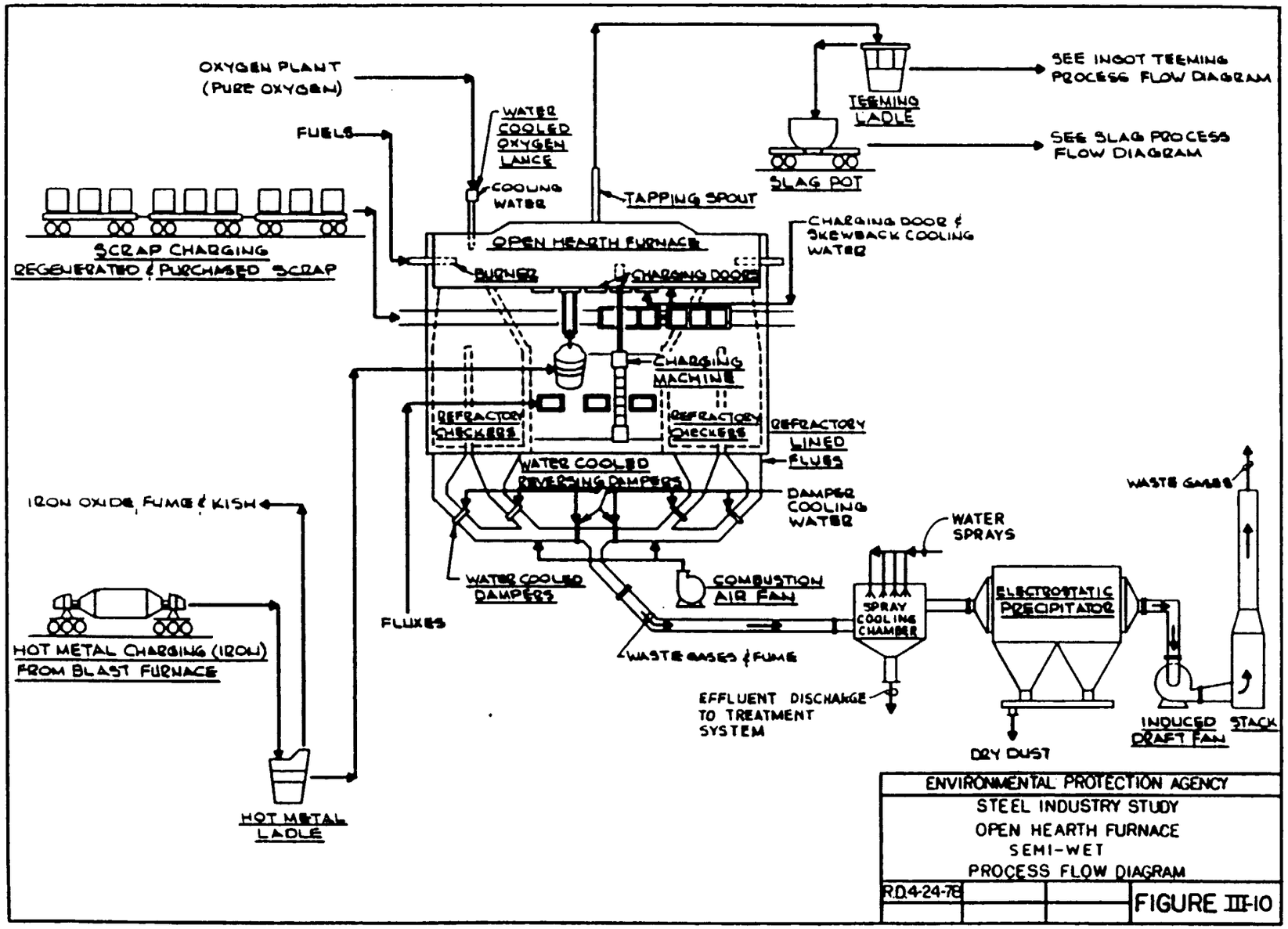

ENVIRONMENTAL PROTECTION AGENCY
STEEL INDUSTRY STUDY
OPEN HEARTH FURNACE
SEMI-WET
PROCESS FLOW DIAGRAM

R.D. 4-24-78

FIGURE III-10

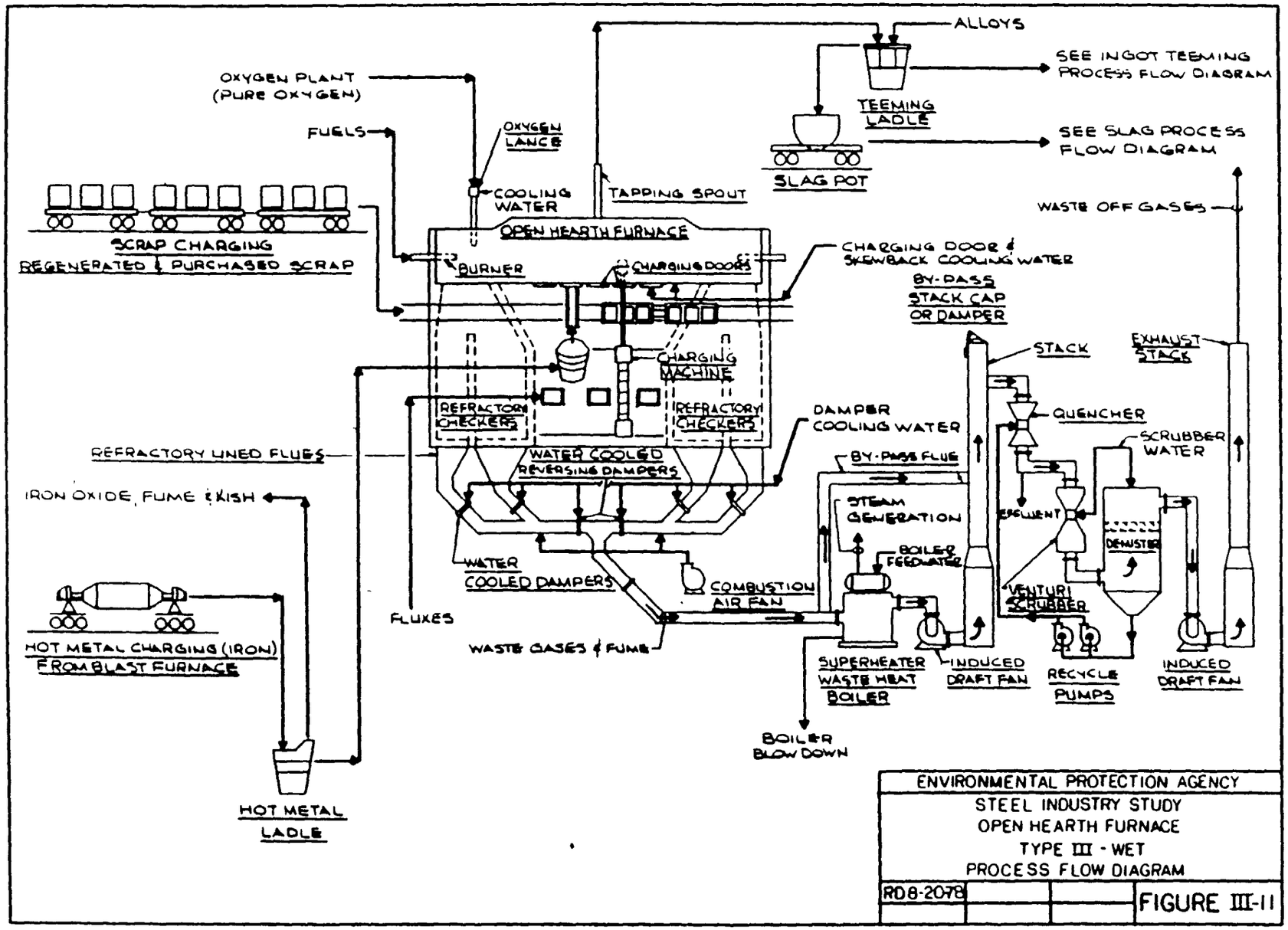

ENVIRONMENTAL PROTECTION AGENCY

STEEL INDUSTRY STUDY

OPEN HEARTH FURNACE

TYPE III - WET

PROCESS FLOW DIAGRAM

RD8-2078

FIGURE III-11

STEELMAKING SUBCATEGORY

SECTION IV

SUBCATEGORIZATION

Introduction

In reviewing the BPT effluent limitations originally promulgated in 1974, and in developing the proposed BPT, BAT, and BCT limitations and NSPS, PSES, and PSNS, the Agency evaluated the expanded data base to assure that the above limitations and standards sufficiently accommodated variations within the industry and each subdivision. Although basic oxygen furnace, open hearth furnace, and electric arc furnace remain as the major subdivisions within the steelmaking subcategory, the segments within these subdivisions were revised to provide a more accurate characterization of steelmaking operations. These revisions are based upon differences in wastewater characteristics and process water usage rates among the types of air pollution control systems in use. One of the revisions involved the development of suppressed and open combustion subsegments for the basic oxygen furnace wet air pollution control system segment. Also, a semi-wet air pollution control system segment was added to the open hearth furnace subdivision. The original and revised segments and subdivisions are presented below for the steelmaking subcategory.

Subcategories and Subdivisions (1974)	Revised Subdivisions and Segments
Basic Oxygen Furnace (BOF)	Basic Oxygen Furnace (BOF)
a. Semi-wet air pollution controls	a. Semi-wet air pollution controls
b. Wet air pollution controls	b. Wet air pollution controls - suppressed combustion
	c. Wet air pollution controls - open combustion
Open Hearth Furnace (OH)	Open Hearth Furnace (OH)
a. Wet air pollution controls	a. Semi-wet air pollution controls
	b. Wet air pollution controls
Electric Arc Furnace (EAF)	Electric Arc Furnace (EAF)
a. Semi-wet air pollution controls	a. Semi-wet air pollution controls
b. Wet air pollution controls	b. Wet air pollution controls

Although the Agency considered many factors in evaluating variations among and within the steelmaking subdivisions, all of the variations were related to the type of air pollution control system used. As a