PN-ABY-027
ISN 93421
Report 3114-95-26-27

The Hashemite Kingdom of Jordan

Ministry of Water and Irrigation

Water Quality Improvement and Conservation Project

Industrial Audit Background Material:

Vegetable Oil Refining

Science Applications International Corp.

Amman Chamber Of Industry
The Hashemite Kingdom Of Jordan

Development Alternatives, Inc.

USAID

The Technical Assistance Team Includes:

Development Alternatives, Inc.
Science Applications International Corp.
Harza Environmental Services, Inc.
Development Associates, Inc.

United States Agency for International Development
Contract No. 278-0288-00-C-4026-00

April 1995

PREFACE/ACKNOWLEDGMENTS

This report presents the background materials for Vegetable Oil Refining Industry prepared with emphasis on the pollution prevention/waste minimization (PP/WM) and water conservation practices for this industry. The report was prepared by Mrs. Mary Waldron, of Science Applications International Inc. (SAIC), Falls Church, Virginia, under subcontract with Development Alternatives, Inc. (DAI), Washington, D.C.

Efforts for preparation of this report was directed by Dr. Shawn R. Niaki, P.E., Pollution Prevention Program Director, of Harza Consulting Engineers and Scientists (Harza), Chicago, USA; coordination with Dr. Usama Mudallal, Environmental Director, of the Amman Chamber of Industry (Chamber); and the member of the PP/WM Committee from the Ministry of Water and Irrigation (MWI) staff, Eng. Rania Khaleq and the Water Authority of Jordan (WAJ) staff including Eng. Abdul Wahab Matar, Eng. Marwan Al-Tal, Eng. Nabeel Hejazeen, and Eng. Mohamad Lafi.

Special appreciation is given to Dr. Mohammed Bani Hani, Secretary General of MWI; Eng. Koussai Quteishat, Secretary General of WAJ; Mr. Khaldun Abuhassan, Chairman of the Chamber; Mr. Walid Al-Khatib, Director General of the Chamber; Dr. Muwaffaq Saqqar of MWI, Project Coordinator; and to DAI, as represented by Edwin D. Stains, Chief of Party; for their cooperation and confidence.

Table of Contents

1.0 INTRODUCTION 1

1.1 Background 1
1.2 Objectives 2

2.0 INDUSTRIAL HISTORY 3

2.1 General 3
2.2 Vegetable Oil Refining Industry in Jordan 3

3.0 PROCESS OVERVIEW 5

3.1 Degumming 5
3.2 Deacidification (Alkali Refining or Neutralization) 5
3.3 Bleaching 5
3.4 Hydrogenation 5
3.5 Deodorization 6

4.0 WATER USE AND WASTE GENERATION 8

4.1 Water Use in the Vegetable Oil Refining Industry 8
4.2 Waste Generation in the Vegetable Oil Refining Industry 8
4.3 United States Effluent Guidelines 8

5.0 POLLUTION PREVENTION AND WASTE MINIMIZATION 9

5.1 Water Conservation Techniques Used by the Vegetable Oil Refining Industry 9
5.2 Waste Minimization Used by the Vegetable Oil Refining Industry 10
5.3 Treatment Technologies Used by the Vegetable Oil Refining Industry 12

5.3.1 Physical Treatment Systems 12
5.3.2 Biological Treatment Systems 13

6.0 REFERENCES

Attachment A Selected Papers on Pollution Control for the Vegetable Oil Refining Industry

Attachment B Additional Sources

Attachment C Abstracts

List of Exhibits

Exhibit 2-1 Process Flow Diagram of Jordanian Vegetable Oil Refining Facility 4

Exhibit 3-1 Process Flow Diagram of Vegetable Oil Refining 7

Exhibit 5-1 Integrated Waste Reduction and Treatment System at a Vegetable Oil Refining Industry 14

1.0 INTRODUCTION

1.1 Background

Under a contract with the United States Agency for International Development (USAID), Development Alternatives Incorporated (DAI) is performing an Industrial Wastewater Discharge Prevention (IWDP) Program in Amman, Jordan. The IWDP Program is one of the four components of the Water Quality Improvement and Conservation (WQIC) project funded by USAID. The Program is being performed by DAI with full coordination between the Jordanian Ministry of Water and Irrigation (MWI) and the Amman Chamber of Industry (Chamber).

The IWDP will be performed in three phases. The first phase requires completion of ten pollution prevention/waste minimization (PP/WM) opportunity audits by DAI and its sub-contractors. The second phase requires completion of Feasibility Studies (FS) for four of the audited facilities. Finally, demonstration projects will be completed for selected FS facilities.

Due to the high cost of waste treatment, as well as the need to minimize waste of raw materials and resources, it is in the best interest of businesses and industries to minimize their waste generating practices. Companies with effective PP/WM programs may well be the lowest-cost producers of goods due to their efficient practices. Waste management practices can include:

1. Reduce waste generation

   - Substitution of less hazardous raw materials in product manufacture
   - Alteration of products manufactured to eliminate need for hazardous materials use
   - Replacement or upgrading of outdated or inefficient process equipment
   - Development of employee training programs to ensure employees efficiently manage raw materials and resources.

2. Reuse waste materials prior to disposal

   - Reuse of uncontaminated raw materials and resources (including water)
   - Reprocessing of previously discarded materials (e.g., off-spec materials, used materials)
   - On site recovery of reusable materials (e.g., used solvents, waste heat, scrap).

3. Recycle waste materials

4. Treat wastes and dispose of residues.

The audits performed during this project will evaluate all available waste management alternatives and will provide site specific recommendations to assist the study industry in developing a comprehensive waste management strategy.

1.2 Objectives

The facility PP/WM audits are designed to assess the potential for pollution prevention and waste minimization at the study facilities. The goal of each audit is to evaluate and identify all possible PP/WM, wastewater clean-up, and water conservation techniques that are appropriate for the study facility. Audit documentation will consist of a background PP/WM assessment paper and an audit evaluation report. This document is intended to serve as the PP/WM background paper for the vegetable oil refining industrial sector.

The specific objectives of this audit are as follow:

1. Review general industry background data and identify "state-of-the-art" processing and waste management practices.

2. Work on site with industry representatives, the MWI officials, and other interested groups to review current processing procedures and identify possible PP/WM options.

3. Develop a report that evaluates all possible PP/WM alternatives and provides recommendations to the industry.

In order to complete the first objective, a comprehensive literature review was performed. This review included searches of the U.S. EPA Pollution Prevention Information Clearinghouse (PPIC) repository (and its corresponding database PIES), on-line library catalog databases, pollution PP/WM bibliographical references, and personal contacts with pollution prevention specialists. The on-line library catalog databases accessed included the OCLC, an on-line catalog of approximately 15,000 libraries in the U.S. and libraries in Canada and Great Britain; the OLS, the on-line EPA library, and DIALOG, a commercial database containing abstracts of journal articles, conferences, and government documents. The review resulted in the identification of numerous references with a range of very general to very specific PP/WM techniques. Source documents were assessed to determine their applicability to this project. Documents pertinent to this project are included as Attachment A or are listed in Attachments B and C.

Following completion of the literature review, the audit team will perform the on-site audit of the industrial facility. The audit will be performed with close consultation of industry representatives to ensure that they are aware of and support proposed actions. Audit activities will included the careful gathering of baseline water use and waste generation data, identification and assessment of potential PP/WM options, and solicitation of ideas and proposals from management and production line staff.

Finally, the audit findings will be summarized and options evaluated in the audit report. The audit will recommend the development of a site-specific program that meets the specific needs and goals of the audited facility. Audit recommendations will include both technical PP/WM recommendations (e.g., housekeeping practices, treatment options, etc.) and suggestions for PP/WM training for facility staff and follow-up studies to assess program successes.

2.0 INDUSTRIAL HISTORY

2.1 General

Edible vegetable oils are derived from the seeds of such plants as soybean, corn, and palms. The oils are fatty-acid esters of glycerol, commonly called triglycerides. The production of edible vegetable oils can be separated into two phases: extraction and refining.

The oils are extracted from the seeds by mechanical or hydraulic pressing or solvent extraction. The crude oil that results from the extraction process must be refined to make the oil acceptable for edible purposes. The refining process removes components such as free (unesterified) fatty acids, phosphatides, unsaponifiable components such as sterols and tocopherols, carotenoids and chlorophyll (color), and metals (copper and iron).

2.2 Vegetable Oil Refining Industry in Jordan

There are 8 vegetable oil refining facilities in Jordan. The Universal Modern Industries Company, Ltd. (UMIC) facility is the oldest. The vegetable oil refining industry in Jordan uses as its raw material the semi-degummed crude corn oil; semi-degummed soya oil; and refined, bleached and deodorized palm oil and palmoline. A flow diagram of the operations conducted by the Jordanian vegetable oil refining facility is provided in Exhibit 2-1.

- **Degumming and Neutralization** - The degumming and neutralization operations are conducted in one step. Phosphoric acid is added to the crude oil to removed the phosphatides and a sodium hydroxide solution is added to remove the free fatty acids. Water is added to the oil to wash the phosphatides and fatty acids from the oil. Centrifuge separators are used to separate the aqueous solution from the oil. The aqueous stream from the separators is wastewater.

- **Bleaching** - In the bleaching process Activated Bleaching Earth (clay) is added to the oil. The clay is removed by filtering the mixture through filter presses. The filtered oil is sent to the deodorization process. The filter clay cake contains some of the oil product.

- **Deodorization** - Steam is injected into the oil under a vacuum to remove undesirable components present in the oil.

- **Packaging** - The oil is placed in plastic or tin containers.

- **Cooling** - The solid oil is cooled in four cooling rooms maintained at a -5 degree Celsius temperature.

3.0 PROCESS OVERVIEW

A flow diagram for a typical vegetable oil refining facility is provided in Exhibit 2-1 and the process operations depicted are described below.

3.1 Degumming

The degumming operation, which is often conducted at the vegetable oil extraction facility, removes phosphatides. Some of the phosphatides in oils are readily hydrated so water or steam is used to precipitate the phosphatides. The calcium and magnesium salts of phosphatidic or lysophosphatidic acid are not hydrated by water but can be hydrated by alkali or acid. Thus, degumming is also combined with alkali refining. The phosphatides are precipitated by reaction with concentrated phosphoric acid, other acids (citric acid), or other agents immediately prior to alkaline neutralization (also called deacidification or alkaline refining). Degumming with concentrated phosphoric acid also removes iron and copper.

3.2 Deacidification (Alkali Refining or Neutralization)

Deacidification with alkali (called alkali refining or alkali neutralization) or steam stripping removes the free fatty acids. Alkali refining can be conducted using either a batch or continuous operation. The continuous operation uses centrifugal separators for separating the oil and aqueous streams. The batch operation uses gravity separation of the phases. Steam stripping is a physical refining process that is used instead of alkali refining. Steam stripping has several advantages over alkali refining: less oil losses, thermal decomposition of carotenoids, and less wastewater generation. However, the process is not suitable for all oils. In addition, the high temperature can cause a loss of tocopherols and discoloration of some pigments.

3.3 Bleaching

Bleaching removes pigments, other minor components, and the residual soap that is formed during alkali refining. Natural or activated bleaching clay is added to the oils at temperature of 90 to 110 degrees Celsius and under vacuum. The amount of bleaching clay required is normally between 0.5 - 2.0 percent by weight. The clay is removed from the oil by filtration, using filter presses or automatic centrifugal-discharge filters.

3.4 Hydrogenation

As the diagram in Exhibit 3-1 indicates, the oil can undergo a variety of processes such as hydrogenation, interesterification, and fractional crystallization, that modify the relationship between solids content and temperature to give the oil products specific properties. Hydrogenation is the most widely used of the oil modification processes. Hydrogenation reduces the degree of unsaturation in the fatty acid groups of the glycerides. This reduction in unsaturated fatty acids results in higher melting range temperatures and enhanced resistance to oxidation and flavor deterioration. In the hydrogenation process, hydrogen gas is dispersed into the oil. Usually nickel, deposited on a support is used as a catalyst in the hydrogenation process. The hydrogenation process is an exothermic reaction and in a continuous hydrogenation operation can be effectively used. However, the hydrogenation process is usually operated as a batch operation because of the greater flexibility and greater control over product quality.

3.5 Deodorization

Deodorization removes volatile components such as aldehydes and ketones that are formed by oxidative and thermal breakdown of unsaturated fatty acids. A small amount of concentrated citric acid solution may also be added during the deodorization process to remove any metals. Deodorization can be conducted batchwise or using a semi-continuous or continuous process. The oil is heated and steam is sparged into the oil in the lower part of an upright cylindrical vessel. As the bubbles form and move upward, volatile components are transferred to the steam and are removed at the top with the steam.

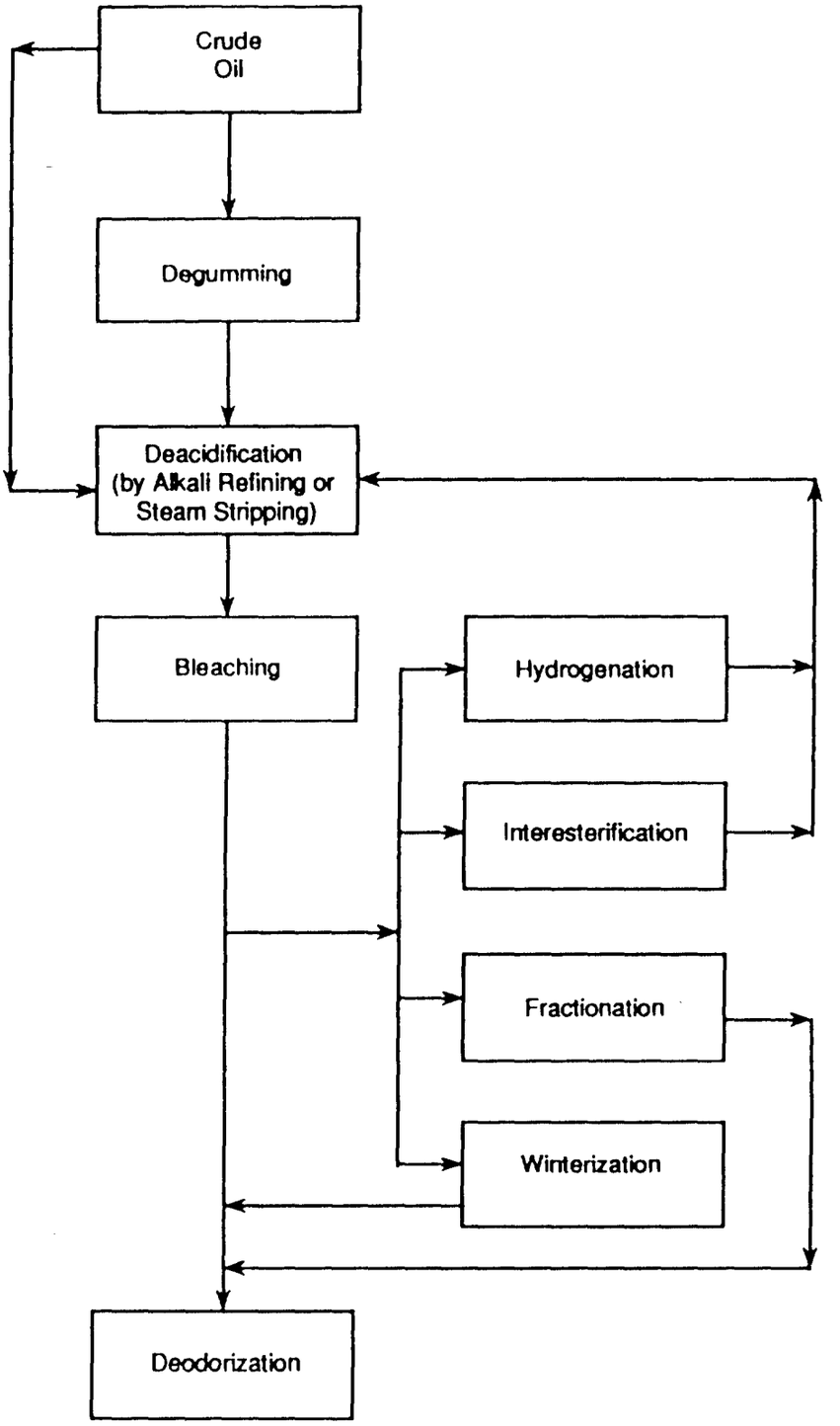

Exhibit 3-1 Process Flow Diagram of Vegetable Oil Refining

4.0 WATER USE AND WASTE GENERATION

4.1 Water Use in the Vegetable Oil Refining Industry

Direct contact of water with the oil is inherent in the process itself. Water is used in the neutralization process as part of the aqueous-based sodium hydroxide solution. Water is used in the bleaching process to clean the filter presses. Water is used to generate the steam in the deodorization process. Water is used in the hydrogenation process to generate the hydrogen gas.

The total water used and wastewater generated will depend on the design of the individual refinery. One facility in the United States that had no practices for water conservation or reuse had a water stream of 4,500 gallons per minute, but implementation of water conservation and reuse is expected to yield a water stream of 200 to 300 gallons per minute. (Grinkevich, 1974) In 1974, an achievable level of water use at a refinery employing conventional processes but practicing water conservation and reuse was reported to be 0.28 gallons of water per pound of refined oil; even further reductions to this water use may be achievable now. (Grinkevich, 1974)

4.2 Waste Generation in the Vegetable Oil Refining Industry

The largest single waste generated is wastewater contaminated by free and emulsified oil. The primary pollutants of concern in the vegetable oil refining industry include the following:

- Biochemical Oxygen Demand (BOD);
- Chemical Oxygen Demand (COD);
- Suspended Solids (SS); and
- Fats, oils and greases (FOG).

Typical vegetable oil refinery wastewater could have the following pollutant concentrations (Grinkevich, 1974):

BOD	500 to 6,700 mg/L
FOG	300 to 4,200 mg/L
SS	541 to 5,851 mg/L

The neutralization process which generates a wastewater of approximately 30 cubic meters per day is the major wastewater stream generated by the Jordanian facility. Other wastestreams include filter press cleaning wastewater, process wastewater from the deodorization process and floor wash and equipment cleaning. Wastewater is probably also generated from leaks, spills, and drainage of pipes, tanks or equipment for repairs or shutdowns. A solid waste is generated from the filter press, an oily clay cake.

4.3 United States Effluent Guidelines

The vegetable oil industry's wastewater is considered to be compatible with the biological treatment commonly used to treat domestic sewage. Thus, the United States Environmental Protection Agency (U.S. EPA) has not established any numerical "effluent limitations" for the vegetable oil refining industry. Those facilities that discharge to rivers or other surface water bodies are regulated through individual permits that establish wastewater discharge limits for BOD_5, TSS, and FOG. Most of the facilities in the U.S. are connected to municipal sewage treatment plants.

5.0 POLLUTION PREVENTION AND WASTE MINIMIZATION

Unlike other industries such as the metal finishing industry, the vegetable oil refining industry has not received much regulatory attention. EPA's Office of Pollution Prevention has not developed a specific manual on pollution prevention techniques for this industry. Some facilities have been required to meet stringent wastewater discharge limits for BOD, TSS, and oil and grease because of their location on particular rivers or connections to municipal wastewater treatment plants that cannot accept large pollutant loadings. These facilities have implemented pollution prevention and waste minimization practices to reduce the pollutant loadings.

The pollution prevention and water conservation practices that have been implemented by the vegetable oil refining industry have usually been reported under the terms pollution control or wastewater treatment. These were the terms used in the 1960s, 1970s, and early 1980s; pollution prevention and waste minimization were not in common use until the late 1980s and 1990s. Thus the papers included in Attachment A or listed in Attachments B and C do not use the term pollution prevention but instead focus on the treatment of wastestreams either to meet wastewater discharge standards or to recover by-products.

The industry has recognized the benefits of pollution prevention and water conservation in reducing the volume of wastewater that ultimately must be treated before it is discharged. Since the wastes generated by this industry are organic and non-hazardous, they are often amenable to reuse or recovery. The amount of oil present in the wastes is actually a function of the efficiency of the refining process. This oil represents wasted or unrecovered product that can be captured and reused within the process or as a potential usable by-product. The water used for refining the oil can also be reused or recycled. Water conservation and PP/WM have been practiced by many vegetable oil refining facilities and documented in successful case studies. The PP/WM techniques that have been described in the literature sources included in Attachment A or listed in Attachments B and C of this paper are summarized in this section.

5.1 Water Conservation Techniques Used by the Vegetable Oil Refining Industry

As water use increases at a facility, its overall waste load increases. Where water is used indiscriminately, valuable recoverable oils will be lost. Efficient use of water at facilities will result in lower costs for water consumption and waste disposal as well as increased revenue from reclaimed wastes. Water use minimization techniques have been successfully demonstrated in a number of facilities and have resulted in substantial cost savings.

To begin a successful water conservation program, plant management should determine the minimum quantity of water needed for each specific process operation. The first step in the program requires an inventory of all water uses throughout the facility. This inventory should then be used to create an overall plant water balance that identifies all uses and routes of disposal. Management should then establish a plan to reduce water use by specific amounts in each segment of production. Specific in-plant design modifications and operational controls and procedures should be developed that adhere to the following premises:

- The less water used, the less waste generated.
- Segregation of the individual wastestreams wherever possible to enable recovery or reuse of the wastes.
- Dilution is <u>not</u> the solution and should be avoided. Dilution decreases efficiency of recovery, reuse, and treatment and increases treatment and disposal costs.

- All drains should be equipped with threaded covers to discourage their removal. This will reduce the possibility of spills, leaks, and clean up wastewater being flushed with high volumes of water rather than being contained and perhaps recovered and reused.

- Use of fresh (new) water should be monitored and optimized.

- Wastewater should be utilized wherever possible.

- Dry clean-up should be practiced where appropriate followed by controlled wet clean-up.

One of the first water conservation techniques implemented by the industry decades ago was the replacement of once-through cooling water with a cooling water recycle system. Process redesign can also result in water savings. For example, physical refining does not use sodium hydroxide and washwater, thus this process generates less wastewater than alkaline refining.

The Jordanian vegetable oil refinery already practices one water conservation technique by reusing the water that is used to generate the steam. The steam is captured, condensed, and cooled by a cooling tower, then collected and reused.

Some other specific water conservation methods that may be applicable to vegetable oil refining operations are provided below:

- Reuse of the water (after the oil is recovered) from the oily wastewater generated by the neutralization process;

- Replacement of water-based chillers with cryogenic (e.g., nitrogen) type coolers;

- Use of low volume, high pressure sprayers for cleaning operations; and

- Use of low contamination wastestreams for first cleaning of equipment or floors.

Measures taken to improve overall facility equipment and piping maintenance can often result in water savings. For example, implementation of a rigorous preventative maintenance program to prevent steam and water leaks and a rapid response repair program to fix the leaks as soon as they occur can reduce water consumption.

5.2 Waste Minimization Used by the Vegetable Oil Refining Industry

Due to the nature of wastes generated by the vegetable oil refining industry, recovery and reuse techniques are widely practiced. In the refining process soap is formed in the alkaline neutralization of free fatty acids. The Jordanian vegetable oil refinery captures this soapstock and sells it to a saponification plant. A review of the literature identified many other examples of recovery methods for both liquid and solid wastes generated by these types of operations.

- Oil in the washwater from the caustic refining process is recovered using ion exchange, the water is recycled back to the washing process

- The wastewater from the alkali refining or neutralization process can be treated by gravity separation to recovery the oil which can be sold to the saponification plant or reintroduced back into the crude oil or at the beginning of the neutralization process.

- The filter clay cake can be land applied to agricultural fields as a soil conditioner or amendment that may be particularly beneficial to sandy soils. The cake could also be used in the production of poultry feed or other domesticated animal feed.

- Optimizing the addition of bleaching clay to reduce excess. This would reduce amount purchased, reduce losses of oil in the spent clay, and increase filter press capacity, thus increasing the process efficiency and reducing production costs.

- The catalyst and hydrogen gas in the hydrogenation process can be recovered and reused. The hydrogen gas could be dispersed into the oil by means of a sparger in the lower part of the vessel with an agitator at the top to redisperse the gas leaving the oil surface. In a recirculation system, gas could be withdrawn from the hydrogenation vessel, purified, and recycled to the sparger together with fresh gas.

- Recovery of phosphatides (can be used to form lecithin) and unsaponifiable components, i.e., sterols and tocopherols (possible valuable by-products) from the wastewater.

- The production schedule can be designed to eliminate the need to clean the process oil lines between the different oil types. Cleaning of the process lines could be done with air or gases rather than water. It may be feasible to eliminate the cleaning of the lines by capturing the end of one oil and the beginning of the other oil and returning this mixed oil to storage tanks to be blended.

- The "first-in, first-out" inventory control system could be implemented to reduce the storage time of the crude oil, thereby minimizing the increase in phosphatides while the crude oil is in storage.

- Any final product does not meet specifications could be returned to the beginning of the refining process for further refining, rather than being discarded as waste.

- Any vegetable oil spills could be collected and returned to the refining process. Any contaminated spilled material that cannot be refined could be collected for shipment to a saponification plant.

- Process control tests could be conducted on the oil throughout the refining process operations. These tests can establish the quantities of raw materials, such as caustic soda, washwater, and bleaching clay to be added. This testing optimizes the addition of raw materials. For example, if the oil contains less phosphatides, less caustic soda and washwater can be used.

- Spill control and containment measures could be implemented to reduce the frequency and volume of spills and capture the spills for possible reuse. For example, spill containment dikes could be installed around storage tanks and process equipment. Storage tanks and process tanks could be equipped with level indicators on the outside of the tanks to indicate the level of oil in the tanks. Audio alarms could also be installed to provide a warning before overflows occur.

In addition, measures taken to increase product yield through optimizing the design or operation of process equiopment or processing techniques offer gains in pollution prevention. Often automation or computerization of process controls can result in improved operations. For example, automation of process operations enable more precise chemical additions that can result in a reduction in the quantity of chemicals used. One of the most viable PP/WM options is the recirculation of the neutralization washwater, after treatment through a cation exchange resin. (Eisenhauer, et. al., 1970)

Many vegetable oil refineries treat the soapstock generated by the alkali refining process to convert the soapstock to a commercial product. The treatment of the soapstock with acid produces an acid wastewater. One method that eliminates the wastewater is the neutralization of the soapstock followed by drying with vacuum evaporation. (Beal, et. al., 1972)

5.3 Treatment Technologies Used by the Vegetable Oil Refining Industry

Vegetable oil refining wastes are generally in the form of concentrated liquid wastewaters or solid organic wastes. The liquid wastes are typically discharged to a municipal sewer system, or are treated on-site and discharged to a receiving water. Solid wastes may be use directly as fertilizers, mixed with feed as a protein supplement, recovery of oils, or landfilled as solid, non-hazardous wastes.

The liquid wastes generated by vegetable oil refining are characterized by high BOD, suspended solids, and oil. Several in-plant treatment options are available. These treatment processes can be categorized as physical, chemical or biological systems. To optimize the recovery of by-products, the treatment design should consider segregation of the individual wastestreams generated by each piece of equipment or operational unit. Individual treatment of specific wastestreams can often result in the in-process recycling of the product or raw materials and concentrated solid or liquid streams that are economically viable as by-products. A schematic diagram of an integrated waste reduction and wastewater treatment system at a vegetable oil refining facility is provided in Exhibit 5-1.

5.3.1 Physical Treatment Systems

Physical treatment processes at vegetable oil refining facilities can include: flow and loading equalization basins and oil separation units. These processes and their applications are described below.

Flow Equalization:

Flow equalization is a relatively simple process that can yield substantial benefits with respect to mitigating shock loads to a municipal treatment plant. Equalization facilities consist of tanks and basins that hold flows from various processes, mix these wastestreams, and release a wastestream to the sewer at a relatively constant rate.

Equalization basins allow vegetable oil refining facilities to combine high and low strength wastes and control the rate of discharge to their own treatment system, or a municipal sewer. This process reduces the potential for sporadic discharges of high strength wastewaters and allows the facility to release its wastestream under controlled conditions. These systems are also attractive due to their low capital cost and minimal operation and maintenance requirements.

Fat, Oil and Grease Removal:

Fats, oils and greases (FOG) can be removed from the wastestream by a variety of methods including catch basins, skimmers, and dissolved air flotation systems. The treatment and removal of free and emulsified oils and greases is typically accomplished by gravity separation, physical filtration and/or

flotation. These treatment processes may be used alone or in combination depending on the nature of the oils and greases to be treated and the strength of the wastestream.

Catch basins are relatively simple units that trap large solids and floatable materials, but allow unrestricted flow to the wastestream. Trapped solids and floatables must be routinely removed from these systems to ensure their proper operation. Removal can be performed manually, or mechanically using a combination of skimmers, rakes and vacuum equipment.

Skimmers can be used to remove FOG where they are suspended in the wastestream. These systems allow and encourage the suspended FOG to coalesce on the surface of the separation unit where they can be removed by manually operated or mechanical skimmers.

Dissolved air flotation (DAF) units are highly effective in removing dispersed FOG from the wastestream. These units utilize fine air bubbles, which are produced by diffusers in the bottom of the separation tank, that promote the coalescing of the FOG as they ascend through the wastewater. The coalesced FOG is then removed by manually operated or mechanical skimmers.

The FOG removal systems described above each require a moderate capital expenditure and must be properly operated and maintained to ensure efficient pollutant removal. The advantages to these systems, however, can include significant reductions in the FOG, SS, and BOD of the wastestream and the capture of FOG that can be recovered as a useful product.

5.3.2 Biological Treatment Systems

Because of the organic, biodegradable nature of the pollutants generated by vegetable oil refining facilities, a wide variety of biological treatment systems can be applied to these wastestreams. A brief description of anaerobic and aerobic treatment systems and their application to vegetable oil refining wastestreams is provided below.

Anaerobic Treatment Systems:

Anaerobic lagoons can reportedly remove up to 95 percent of BOD and TSS and routinely achieve over 80 percent removal. Anaerobic lagoons are relatively simple to construct and operate and are less costly than other biological treatment systems. Problems associated with these systems include the potential for significant odor generation.

Anaerobic contact systems are equally applicable; however, they require significant expenditures for equipment and operation, and are not widely used. Their advantages include a high BOD removal rate in a short timeframe. Disadvantages include high cost and operational difficulties.

Aerobic Treatment Systems:

Aerobic treatment processes are generally used by the industry as secondary treatment prior to direct discharge to a receiving water. The relatively high capital and operation and maintenance costs for these units generally preclude their use to pre-treat wastes prior to disposal to municipal sewers. A detailed description of these processes is not provided in this section, but the different types of aerobic processes includes aerated lagoons, aerobic lagoons, activated sludge, trickling filters, and rotating biological contactors (RBC).

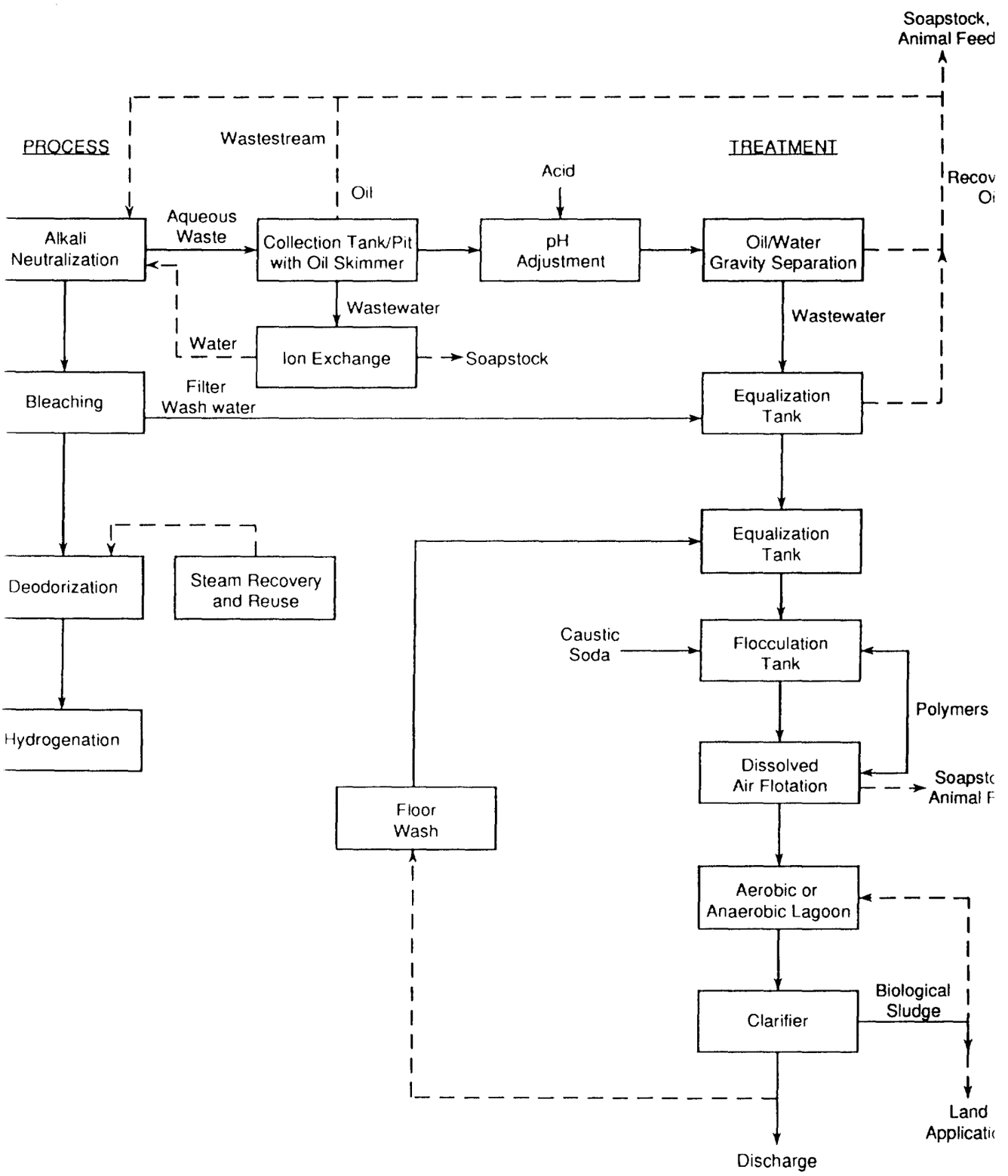

FIGURE 5-1. Integrated Waste Reduction and Treatment System at a Vegetable Oil Refining Industry

6.0 REFERENCES

Attachment A Selected Papers on Pollution Control for the Vegetable Oil Refining Industry

Attachment B Additional Sources

Attachment C Abstracts

Attachment A

Selected Papers on Pollution Control for the Vegetable Oil Refining Industry

NOTICE: This material may be protected by copyright law. (Title 17 U.S. Code)

Beal, R. E., V. E. Sohns and H. Menge. "Treatment of Soybean Oil Soapstock to Reduce Pollution", Journal of the American Oil Chemists' Society, Vol 49, pp 447-450, 1972. Reprinted with permission from Journal of American Oil Chemists Society.

Beal, R. E., et. al. "Water-Recycle Washing of Refined Soybean Oil: Plant Scale Evaluation", Journal of American Oil Chemists Society, Vol. 50, pp. 260-263, July, 1973. Reprinted with permission from Journal of American Oil Chemists Society.

Cantrell, Mollie Kaye and Howard F. Keller, Jr. "Treatment of Vegetable Oil Refining Wastes to Conform to Government Regulation", Journal of the American Oil Chemists' Society, Vol. 52, January 1975. Reprinted with permission from Journal of American Oil Chemists Society.

Karim, Mohamed Ismail Abdul and Ahmad Qalam Ahmad Kamil. "Biological Treatment of Palm Oil Mill Effluent using Trichoderma viride", Biological Wastes, Vol 27, pp. 143-152, 1989. Reprinted with permission from Bioresource Technology (formerly Biological Wastes), Elsevier Science Ltd., Pergamon Imprint, Oxford, England.

Morris, Charles E. "Low-cost Wastewater Treatment", Food Engineering, Vol. 53, No. 7, pp. 51-56, July, 1981. Reprinted with permission from Food Engineering, Chilton Publishing.

Sengul, Fusun. "A Case Study on Sunflower Seed Oil Industries Waste Characterization, Classification and Treatment", Water Science and Technology, Vol 22, No. 9, pp. 241-248, 1990. Reprinted with permission from Water Science and Technology, Elsevier Science Ltd., Pergamon Imprint, Oxford, England.

NOTICE: This material may be protected by copyright law. (Title 17 U.S. Code)

Reprinted with permission from Journal of American Oil Chemists Society.

Treatment of Soybean Oil Soapstock to Reduce Pollution[1]

L.L. BEAL and V.E. SOHNS, Northern Regional Research Laboratory,[2] Peoria, Illinois 61604,
and H. MENGE, Animal Science Research Division, ARS, USDA, Beltsville, Maryland 20705

ABSTRACT

Often soapstock is acidulated to convert this byproduct of vegetable oil refining to a salable commodity. The acidic waste water from this treatment constitutes a significant part of the environmental pollution from refineries. A process of neutralizing and drying was investigated as a nonpolluting method for upgrading soybean oil soapstock. Neutralization with sulfuric acid was conducted in a ribbon blender. The neutral soapstock was dried to ca. 4% moisture, either batchwise in a natural circulation evaporator or continuously in a scraped film evaporator. The product is liquid while hot but solidifies to a waxy solid when cooled to room temperature. When added to a standard broiler ration, the feed efficiency and rate of gain of chickens equaled that obtained with a commercial feed fat added at the same level. The soapstock products fed, which contained 200-300 ppm xanthophyll, gave significantly better shank pigmentation than the commercial fat, which contained 3 ppm.

INTRODUCTION

Disposition of soapstock from alkali refining of soybean oil and other vegetable oils has become a problem with many refineries because of increased restrictions on environmental pollution. Acidulation of soapstock, widely used to convert it to salable fatty acids, produces a substantial amount of acidic wastewater containing biodegradable material (1). Disposal of the waste is increasingly difficult and costly.

Various other methods of handling soapstock are used or have been proposed. Addition of soapstock directly to mixed meal is practical under certain conditions. However the difficulty of handling wet soapstock, preventing microbial spoilage and avoiding shipping costs often precludes such disposition. National Research Council specifications require that soapstock be neutralized before it is added to a commercial feed (2). A process of drum drying soapstock and addition of the dry material to poultry feed has been described (3). The dried material presents a dust problem in handling and feed mixing. It is hygroscopic and cakes when stored. Conversion of acidulated soapstock to fatty acid methyl esters is another method of producing a salable product, but again acidulation introduces a disposal problem (4).

In this report a process is described for treating soapstock to produce a desirable and salable product without creating either water or atmospheric pollutants. A cost estimate is given to indicate the economics of the proposed process whereby soapstock is neutralized and then dried by vacuum evaporation. Neutralization converts soaps to fatty acids; the dried product becomes liquid when warmed to ca. 45 C and remains a waxy solid at room temperature. The only effluent from the process is evaporated water.

Although neutral dried soapstock (NDSS) might be a source of industrial fatty acids by splitting the glycerides it contains by continuous high-temperature hydrolysis, the main value of NDSS would be as a source of energy and xanthophyll in poultry rations.

Analytical Methods

Moisture in NDSS was determined by drying a sample to constant weight in a rotating flask evaporator (Rinco) while heating the flask in a water bath at 90-95 C and an absolute pressure of 0.5 mm mercury. Free fatty acids were determined by AOCS Official Method Ac 5-41 and unsaponifiable material by Method Da 10-42.

Total fatty acids (free and combined) were determined by the gas liquid chromatography (GLC) method of Black et al. (5).

Sodium was determined by an atomic adsorption method similar to that described by List et al. (6). An oil soluble sodium standard was obtained from the National Bureau of Standards. The instrument was a Techtron AA 120 equipped with a sodium lamp.

Carotene and xanthophyll were determined by Official AOAC Method 39.019-31.022.

Phosphorous was determined by the method of Truog and Meyer (7).

Fatty acid composition was determined by preparing methyl esters by the AOCS Tentative Method Ce 2-66 (1969 Revision) and analyzing by GLC, AOCS Tentative Method Ce 1-62 (1970 Revision).

EXPERIMENTAL PROCEDURES

Three lots of soapstock produced in a commercial plant by alkali-refining crude, nondegummed soybean oil were obtained at different times. Lot 1 of soapstock was converted to NDSS by placing 42.6 lb. in a 1 cu ft, stainless-steel, batch ribbon blender and mixing thoroughly. A 10 g aliquot of the blended lot was dispersed in 50 ml

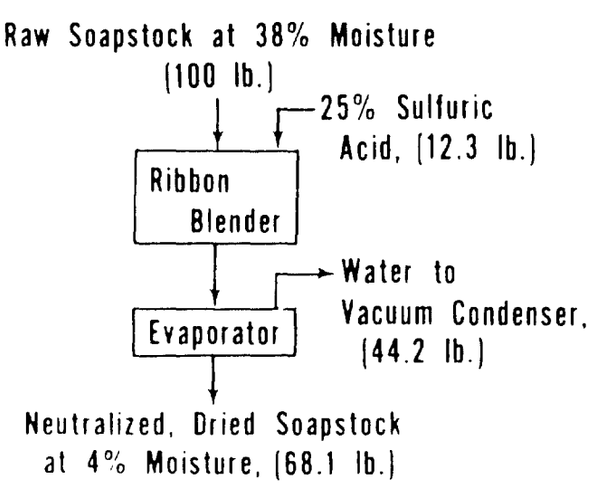

FIG. 1. Flow sheet for neutralized, dried soapstock.

[1]Presented at the AOCS Meeting, Los Angeles, April 1972.
[2]N. Market. Nutr. Res. Div., ARS, USDA.

TABLE I

Partial Analysis of Neutralized, Dried Soapstock (NDSS) and a Commercial Feed Fat

Composition	Soapstock, lot no.[a] 1	2	3	4	5	Commercial feed fat
Total fatty acids, %	71.0	64.0	54.0	—	—	97.3
Free fatty acids, %	34.0	28.3	27.1	—	—	41.6
Moisture, %	4.6	4.4	5.7	0.0	0.0	1.6
Unsaponifiable, %	2.0	2.0	2.1	—	—	0.046
Phosphorous, %	—	1.04	0.80	—	1.66	0.0019
Sodium, %	1.8	1.6	4.5	—	—	0.0
Carotene, μg/g	350	575	229	78.0	89.0	4.0
Xanthophyll, μg/g	202	313	231	40.0	38.0	3.0
Fatty acid composition						
C-16	—	—	—			10.1
C_{16}	16.7	17.6	17.3			25.8
C_{18-0}, stearic	4.6	4.2	4.4			14.6
C_{18-1}, oleic	15.9	15.6	15.7			37.0
C_{18-2}, linoleic	55.7	55.7	55.4			11.2
C_{18-3}, linolenic	7.1	6.9	7.2			1.3

[a]Lots 1 and 2 prepared with a natural circulation evaporator and used in feeding trials. Lot 3 prepared with a scraped film evaporator. Lots 4 and 5 prepared by pilot-plant refining and laboratory-scale drying; lot 4 without and lot 5 with neutralization.

TABLE II

Growth, Feed Conversion and Shank Pigmentation Scores of 6-Week-Old Straight-Run Broilers

Treatment	Averages of two trials[a] Weight at 6 weeks, g	Feed conversion[b]	Shank pigmentation, Roche yolk color fan number[c]
Broiler diet[d]	1312	1.87	4.84
NDSS diet[e]	1307	1.91	6.83[f]

[a]Eighty chicks per treatment in each of the two trials.
[b]Feed consumed per weight gain.
[c]Roche color fan, F. Hoffman-LaRoche Co., Ltd., Basle, Switzerland.
[d]Diet containing 4 % commercial feed fat.
[e]Diet containing 4 % neutralized, dried soapstock (NDSS).
[f]Highly significant ($p \geq 0.01$).

distilled water, and 1% sulfuric acid was slowly added from a burette with rapid stirring until a pH of 7.0 was reached that persisted for more than 1 min. From this titration the calculated amount of 25% sulfuric acid (5.25 lb.) was slowly added to the soapstock while it was being mixed in the ribbon blender. Mixing was continued for ca. 15 min after addition of the acid, and a 10 g sample dispersed in 50 ml of distilled water gave a pH of 6.9.

The neutralized soapstock was dried batchwise by drawing it into a small steam-heated, natural-circulation evaporator under a 22 in. vacuum and heating cautiously because of a tendency to foam. As evaporation proceeded, steam pressure reached 10 psi; when circulation stopped, the batch was withdrawn into a suitable container where it solidified to a waxy solid on cooling to room temperature. A flow sheet of the process and a material balance based on laboratory tests with soapstock from lot 1 are shown in Figure 1.

Lot 2 was prepared in the same manner, but lots 1 and 2 were used separately in broiler feeding studies conducted at Beltsville, Md. Lot 3, not used for feeding, was neutralized and then dried continuously by a single pass through a steam-heated, thin film (scraped film) evaporator operated under an absolute pressure of ca. 5 mm of mercury with steam at 20 psi in the jacket. Compared with the first two lots, the product was visibly darker brown, apparently as a result of the higher temperature (steam pressure) used. The relation between color and feeding value was not determined. A thin-film evaporator like that used to dry commercial lecithin should be the most satisfactory drier for NDSS because the wet material tends to foam and because its heat sensitivity is similar to that of lecithin.

Lots 4 and 5 were prepared from soapstock produced by alkali-refining crude soybean oil on a continuous pilot plant scale. Lot 4 was dried without neutralization or other treatment and lot 5, after neutralization with dilute sulfuric acid. Both lots were vacuum-dried in a rotating flash evaporator at 90 C; both were tan in color, while lots 1, 2 and 3 were brown to dark brown.

RESULTS AND DISCUSSION

The composition of several lots of NDSS prepared in the pilot plant and laboratory is given in Table I.

Witte and Sipos (3) showed that soapstock dried directly or after addition of more alkali retained a high xanthophyll content. However when soapstock is acidulated, xanthophyll is destroyed (8,9). NDSS retains a substantial content of both carotene and xanthophyll as shown from compositions of lots 1, 2 and 3. Refining conditions used for lots 4 and 5 were possibly not optimum for removing xanthophyll and carotene from crude oil, since the material was much lower in xanthophyll than the soapstock obtained from a commercial plant and used for other tests. The similarity of the carotene and xanthophyll contents of lots 4 and 5 shows that the process of neutralizing and drying soapstock resulted in virtually no destruction of these materials.

NDSS had no signs of microbiological growth or other spoilage after several months at room temperature. Although solid at room temperature, it liquefies at ca. 40-45 C and is fluid enough at 45-50 C for easy incorporation in a feed.

Because of its phosphatide content, the yield of NDSS should be higher than for acidulated soapstock. Thus for lot 1, the maximum yield of acidulated soapstock from 100 lb. of raw soapstock would be ca. 50 lb., an amount considerably less than the 68 lb. of NDSS we obtained. The difference in yields would represent the glycerine and phosphatide moieties which would be lost in the wastewater from acidulation. They apparently constitute the major portion of the BOD content of the wastewater that contributes to environmental pollution problems.

According to a recent report (10), alkali refining does not selectively remove chlorine-containing pesticides from vegetable oils; therefore soapstock or products therefrom used in feeds should not contain significant levels of such materials. Another report confirms that it does not (Private communication, Wisconsin Alumni Research Foundation). However deodorizer distillate may contain substantial amounts of such pesticides, and it should not be added to feeds unless analysis shows it to be suitable.

Lots 1 and 2 were compared with a commercial feed fat used routinely in broiler rations (Table I). Two 6 week feeding trials were conducted with straight-run broiler chicks in which NDSS was compared with a commercial feed fat. Growth and feed efficiency were not significantly different for either diet as shown in Table II. However improvement of shank pigmentation with NDSS was highly significant. Mortality rates were the same for both treatments and both trials and were not related to the dietary regime. Detailed results of the feeding trials will be published elsewhere (11).

A preliminary cost estimate has been prepared for a plant producing 20,000 lb. of NDSS daily by the process described. The production of 20,000 lb. of NDSS at 3% moisture would require processing ca. 30,500 lb. of untreated soapstock at 36.5% moisture. For a plant operating 300 days per year, 24 hr a day, the estimated fixed capital investment, as detailed in Table III, is 150,000. This hypothetical installation is considered an adjunct to an existing soybean oil processing plant, and presumably adequate building space is available for the proposed process.

Estimated processing costs for producing NDSS are ca. 1.55 cents/lb. Cost items listed in Table IV and included in processing costs are sulfuric acid, utilities, labor and supervision (shared with existing plant), maintenance and supplies, fixed charges and general plant overhead. Not included in processing costs are cost for untreated soapstock, administrative and selling expenses, interest on investment and profit. If the soapstock has a moisture content of 50%, the cost to product NDSS with 3% moisture will be increased ca. 0.1 cents to 1.65 cents/lb.

TABLE III

Estimated Fixed Captial Investment for Plant Producing 20,000 lb. Neutralized, Dry Soybean Oil Soapstock Per Day[a]

Equipment delivered	Cost, $
Evaporator, agitated, thin film, 316 SS	48,000
Pumps, metering	1000
Heat exchanger, 316 SS	600
Mixer, static, in-line	800
Pumps, miscellaneous use	1300
Tanks, process and storage	16,300
Equipment delivered, total cost	68,000
Installation, piping, wiring, etc.	60,000
Engineering fees	12,000
Contingencies	10,000
Estimated fixed capital investment	150,000

[a]Plant operations: 24 hr/day, 300 days/yr.

In the hypothetical plant, an agitated thin-film evaporator is used to remove water from the neutralized soapstock. In actual practice, if a forced-circulation evaporator could be substituted for a thin-film unit, capital investment could probably be reduced. Since low pressure steam can be used for the evaporation step, exhaust steam, if available in a plant, could find application. In the estimate steam costs are based on the use of high pressure steam. It is conceivable, therefore, that actual plant processing costs could be made lower than the listed estimated costs by adopting certain process modifications.

In previous reports we described a water-recycle process for washing alkali-refined or hydrogenated soybean oil in which the water used to wash residual metal ions from the oil is passed through a cation exchange resin in the hydrogen form (12,13). The water is then reused. When the resin is periodically regenerated by rinsing it with acid, excess acid must be discarded. In the proposed method for treating soapstock, this excess acid plus additional strong acid could be used for the neutralization step and the water evaporated in drying the neutral soapstock could be used for rinsing regenerated resin. Such a setup would provide an integrated solution to a refinery pollution problem.

ACKNOWLEDGMENTS

Analyses were performed by L.T. Black, J.E. McGhee and F.B. Alaksiewicz and pilot plant operations by G.W. Nofsinger. Feeding tests were directed by C.A. Denton, Animal Science Res. Div., Beltsville, Md.

TABLE IV

Estimated Processing Costs to Produce 20,000 lb. Neutralized, Dry Soybean Oil Soapstock Per Day[a]

Cost item		Dollars per day
Raw materials		
Sulfuric acid, 98%, 1008 lb., $0.016/lb.		16.13
Utilities		
Steam, 30,000 lb./day, $0.75/M lb.	22.50	
Water, 35,000 gal/day, $0.15/M gal	5.26	
Electricity, 960 kwh/day, $0.015/kwh	14.40	42.16
Labor and supervision		
Operators, 12 man hr/day, $4.50/hr	54.00	
Laboratory technician, 3 man hr/day, $4.00/hr	12.00	
Supervision, 20% of operator and technician	13.20	
Overhead	15.84	95.04
Maintenance and supplies, 6%/yr on $150,000		30.00
Fixed charges, 13%/yr on $150,000		65.00
General plant overhead		62.52
Estimated daily production costs, $/day		310.85
Estimated processing costs, cents/lb.		1.55

[a]Plant operations: 24 hr/day, 300 days/year.

REFERENCES

1. Norris, F.A., in "Bailey's Industrial Oil and Fat Products," Third Edition, Edited by D. Swern, Interscience Publishers, New York, 1964, p. 762.
2. "Feed Industry Red Book," 1971 Edition, Communications Marketing, Inc., Edina, Minn. p. 35.
3. Witte, N.H., and E. Sipos, Central Soya Co., Inc., U.S. Patent No. 2,929,714 (1958).
4. Eaves, P.H., J.J. Spadaro and E.A. Gastrock, JAOCS 36:230 (1959).
5. Black, L.T., G.G. Spyres and O.L. Brekke, Cereal Chem. 44:152 (1967).
6. List, G.R., C.D. Evans and W.F. Kwolek, JAOCS 48:438 (1971).
7. Truog, E., and A.H. Meyer, Ind. Eng. Chem. Anal. Ed. 1:136 (1929).
8. Kruse, N.F., and W.W. Cravens, Central Soya Co., Inc., U.S. Patent No. 2,924,525 (1960).
9. Bondi, P., I. Ascarelli and P. Budowski, "Utilization and Function of Vitamin A in the Nutrition of Poultry," Public Law 480 Contract A10-AH-7, Final Report (1967), The Hebrew University, Renovat, Israel.
10. Karleskind, A., and J.P. Wolff, Rev. Fr. Corps Gras 18:281 (1971).
11. Menge, H., and R.E. Beal, Poultry Sci., in press.
12. Eisenhauer, R.A., R.E. Beal and E.L. Griffin, Jr., JAOCS 47:137 (1970).
13. Beal, R.E., and V.E. Sohns, Ibid. 48:539 (1971).

[Received May 19, 1972]

NOTICE: This material may be protected by copyright law.
Reprinted with permission from Journal of American Oil Chemists Society.

Water-Recycle Washing of Refined Soybean Oil: Plant Scale Evaluation[1]

R.E. BEAL, L.T. BLACK, E.L. GRIFFIN, J.C. MENG[2] and
G.S. FARMER,[3] Northern Regional Research Laboratory,[4] Peoria, Illinois 61604

ABSTRACT

A series of 24 hr tests was made in a commercial refinery under eight different operating conditions to select optimum conditions for a subsequent longer test of the antipollution recycle-washing process wherein wash water is recycled instead of being discarded. Alkali-refined oil was continuously washed at a rate of 15,000 lb/hr to remove sodium. Recycled wash water was then treated with a cation exchange resin to remove sodium. Two wash water pH levels, two oil-water ratios and the addition of a sequestering agent ethylene diamine tetraacetic acid (EDTA) to wash water were factors investigated. For the longer test a water pH of 3.0 and an oil-water ratio of 4:1 were used, and EDTA was not added. Operating and analytical data, equipment specifications and cost data were acquired. The washed oil had a satisfactorily low content of sodium, iron and copper. After it was bleached the oil hydrogenated at a rate comparable to that of a conventionally washed oil. The bleached, deodorized oil had satisfactory flavor and flavor stability. The exchange resin required periodic caustic cleaning to maintain capacity. The new recycle process provides an economic solution to the wash water disposal problem.

INTRODUCTION

Disposal of wastewater from conventional washing of alkali-refined soybean oil presents a problem to refiners because of increasingly stringent laws regarding vegetable oil refinery effluents. About 0.5% of the oil washed is lost in the wastewater (R.A. Eisenhauer, unpublished data). Previous small scale tests (1-3) indicated the feasibility of a process for washing alkali-refined soybean oil to remove soap cations wherein the wash water is recycled instead of being discarded. Since the usual washing process produces a high biological oxygen demand (BOD) effluent as well as a loss of oil, the recycle process offers a two-fold benefit of increasing oil yield and reducing the wastewater effluent and BOD. In order to fully evaluate water recycle washing on a commercial scale, tests were conducted in a production refinery at a rate of six tank carrs of oil per day under a contractual arrangement. These tests provided data for an assessment of operating factors which could not be realistically evaluated in our pilot scale tests.

The test program was conducted in two phases. A series of eight 24 hr tests was made with three operating variables at two levels each. At the conclusion of preliminary tests, operating conditions were selected from the results for a 28 day semicontinuous operation in which the recycle washing process was used 5 days per week, 24 hr per day, except for shut-down periods to be described later.

EXPERIMENTAL PROCEDURES

Analytical

Sodium in refined oil was determined by flame photometry and copper and iron by atomic absorption (4,5). BOD in wastewater was determined by the standard 5 day method (6). Free fatty acids were determined by the AOCS method (7). The 8 hr AOM peroxide value was determined by oxidizing a sample of deodorized oil 8 hr under standard conditions (8) and determining peroxides (9).

To determine the susceptibility of refined oil to hydrogenation, samples (both unbleached and laboratory bleached [0.5% Super Filtrol 15 min at 105-110 C] oils) were hydrogenated for 30 min in a Parr Autoclave modified with a gas dispersion stirrer, with 0.05% Girdler G-15 reduced nickel catalyst, at 175 C, 10 psig hydrogen pressure. Samples taken after 15 and 30 min reaction were analyzed for refractive index (40 C) and iodine value.

Operation

Equipment consisted of two 1500 gal fiberglass storage tanks, two 8 ft^3 rubber-lined ion exchange columns, two stainless steel centrifugal pumps, a flowmeter, heat exchanger, Lightnin no. 2LBS-50 in-line mixer, water wash centrifuge, 16 ft^3 of Amberlite 252 cation exchange resin (Rohm & Haas Co.) and a level control for no. 1 storage tank. The flowmeter, heat exchanger and mixer were of stainless steel. The centrifuge had stainless discs and dam but had a carbon steel bowl, dam retainer ring and cover

[1]One of nine papers presented in the symposium "Processing of Edible Oils," AOCS Meeting, Ottawa, September 1972.

[2]Anderson Clayton Foods, Sherman, Tex.

[3]Anderson Clayton Foods, Dallas, Tex.

[4]ARS, USDA.

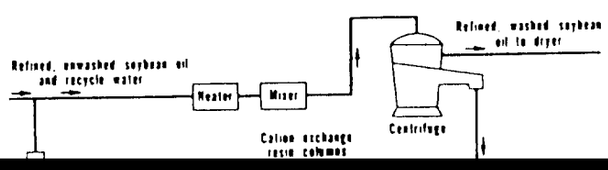

TABLE I

Preliminary Runs, Average Data

No.	pH	Oil-water	EDTA[a], %	Sodium, ppm Unwashed oil	Sodium, ppm Washed oil	Sodium removed, %
1A	2.5	2.5:1	0.0	68	0.6	99.1
1B	2.5	5:1	0.0	47	1.8	96.2
2A	3.0	5:1	0.	40	1.9	95.3
2B	3.0	5:1	0.0	46	2.1	95.4
3A	2.5	2.5:1	0.01	48	1.4	97.0
3B	2.5	5:1	0.01	34	0.5	98.5
4A	3.0	2.5:1	0.01	50	1.3	97.4
4B	3.0	5:1	0.01	25	2.3	90.8
			Averages			
	2.5					97.7
	3.0					94.7
		2.5:1				97.2
		5:1				95.2
			No			96.5
			Yes			97.4

[a]EDTA = ethylene diamine tetraacetic acid.

washed oil from the centrifuge then was vacuum-dried before subsequent treatment. Water from the centrifuge was stored in water storage tank no. 1. From there it was pumped, at ca. 150-170 F, through two cation-exchange resin columns in series and collected in tank no. 2 for reuse. A recording pH meter monitored the water from the primary ion-exchange column and signaled by a rising pH when regeneration of the primary column resin with sulfuric acid was required. During regeneration of the resin in this column, recycle water was passed only through the secondary column. After regeneration, the fresh column became the secondary column. In this manner, the two columns were alternately regenerated for reuse as they became exhausted of hydrogen ions and saturated with sodium and other metal ions.

Resin regeneration was conducted as follows: (a) The exhausted resin (8 ft^3) was backwashed in the column with 100 gal of plant water at a rate of 10 gal/min. (b) The washed resin was backwashed with 2500 lb of 2.5% sulfuric acid at a rate of 7.5 gal/min (for 40 min). (c) The resin was backwashed with 4.75 gal/min of plant water for 40 min. (d) The resin was down-rinsed with 20 gal/min of plant water for 30 min. (e) The resin was down-rinsed with 20 gal/min of recycle water from tank no. 1 for 10-15 min.

TABLE II

Continuous Runs, Average Data[a]

Day	Flow, lb/hr Oil	Flow, lb/hr Water	pH, from tank no. 2	Sodium, ppm[b] Unwashed oil	Sodium, ppm[b] Washed oil	Free fatty acid, %
1	15,640	3950	2.9	49	2.3	0.065
2	15,830	4000	2.6	58	2.0	0.075
3	15,920	3950	2.8	56	1.8	0.072
4	16,000	4000	2.8	54	2.1	0.065
5	15,670	3950	2.8	20	2.4	0.059
6	15,600	3950	2.9	17	2.6	0.063
7	15,600	3900	3.1	8.7	2.9	0.063
8	15,600	3900	3.0	8.9	2.9	0.063
9	15,710	3900	3.1	31	3.6	0.065
10	16,000	3900	2.8	39	6.4	0.063
11	15,600	3900	2.8	26	1.2	0.060
12	15,600	3900	2.9	28	1.4	0.053
13	15,600	3900	2.9	30	1.8	0.067
14	15,200	3750	3.0	26	1.7	0.050
15	15,000	3650	3.0	32	1.9	0.050
16	14,850	3650	3.0	48	2.5	0.060
17	14,320	3650	3.1	37	2.2	0.060
18	14,890	3550	3.0	59	3.1	0.068
19	14,660	3700	2.9	35	2.5	0.057
20	10,730	2700	3.0	32	2.3	0.055
21	9530	2350	3.0	23	1.7	0.047
22	12,380	3100	3.0	34	2.3	0.057
23	13,330	3350	2.9	26	0.9	0.053
24	13,380	3350	2.9	35	0.4	0.055
25	13,170	3300	2.9	34	1.8	0.057
26	12,730	3200	2.8	61	1.1	0.080
27	13,470	3350	2.9	31	1.6	0.062
28	13,880	3450	2.9	35	1.6	0.050
Average	14,500	3600	2.9[c]	35	2.2[d]	0.061

[a]Spot analyses of samples of washed oil for iron and copper gave: Fe, 0.02-0.09 ppm; Cu, 0.02 ppm.

[b]Sodium x 13.2 = soap (theory).

[c]pH of recycle water from tank no. 1 to ion exchange column was generally 3.5-5, but occasionally 8-10.

[d]Average sodium removal, 93.7%.

TABLE III

Hydrogenation for Soybean Oil Washed by Recycle and Regular Methods

Sample	Extent of hydrogenation[a]			
	Refractive index, 40 C		Iodine value	
	15 min	30 min	15 min	30 min
Regular washed				
Unbleached	1.4627	1.4609	98.6	83.4
Bleached[b]	1.4609	1.4590	85.1	67.8
Recycle washed				
Unbleached	1.4656	1.4648	124.2	117.8
Bleached	1.4613	1.4596	88.9	72.6

[a]Initial refractive index: 1.4668. Initial iodine value: 131.8. Hydrogenation conditions: 175 C, 10 psig, 0.05% Girdler G-15 catalyst.

[b]0.5% Super Filtrol, 15 min at 105-110 C.

All rinse and regeneration effluents were discarded. During the 28 day test, it was found that the time between regenerations dropped from 20 hr to less than 2 hr after ca. 9 days of operation. It was then necessary to soak the resin in situ with hot 2% caustic solution for 2 hr to remove impurities. When the resin was then regenerated with acid, it was restored to a satisfactory capacity. When the recycle washing system was shut down for longer than 1 day, acid was added to the water in the resin columns to inhibit the growth of microorganisms.

During the course of the experiment, hourly records were made of the oil flow, wash water flow, pH to the ion-exchange column, temperature to the ion-exchange column and temperature from the mixer. The pH to the heater was monitored every 30 min, and the pH from the primary ion-exchange column was continuously monitored. Samples of the wash water to the heater and from the centrifuge and of the unwashed and washed soybean oil were collected every 8 hr for sodium and fatty acid analysis.

RESULTS AND DISCUSSION

Preliminary Runs

In preliminary runs, pH's of 2.5 and 3.0, oil-water flow ratios of 5:1 and 2.5:1 and the addition of EDTA were operation variables examined. The results of the eight 24 hr runs are outlined in Table I.

From these results, the best conditions for removing sodium were pH 2.5 and oil-water 2.5:1. EDTA had negligible effect.

Difficulty was encountered during the preliminary run 2B in the first attempt to maintain a pH of 3.0. The pH dropped well below the operational limits of 3.0 ± 0.2. Consideration of the problem indicated that significant anion contamination was introduced from the raw water originally used for the final rinse of the ion-exchange columns following regeneration. To overcome the problem two procedures were tried: (a) using steam condensate to rinse the resin (step *e*); and (b) using recycle wash water from storage tank no. 1 to rinse the resin (step *e*) and then adding condensate to tank no. 1 to replace water removed. Both procedures were found to be successful, but the latter was used because it offered a faster, more steady flow rate. It was then possible to maintain the pH within desired limits in run 2B and succeeding runs.

TABLE IV

BOD Tests[a]

Cycle	BOD_5, mg/liter	Water, lb	BOD lb
(a) Backwash	10,500	830	8.7
(b) Inject acid	2340	2420	5.8
(c) Displace acid	980	1580	1.5
(d) Fast rinse	140	5000	0.9
Total		9830	16.9

[a]Assuming the final rinse (e) is made with steam condensate and no BOD material is removed.

TABLE V

Estimated Fixed Capital Investment for Installation of Equipment to Convert a Normal 12 Tank Car Per Day Refinery System to a Recycle Water Wash System

Equipment	Cost in dollars
Heater	1000
Mixer	1500
Two tanks, fiberglass	1900
Two pumps	1400
Motor control valve	200
Two cation exchange columns, fully automated, with 30 ft^3 resin per column	24,200
Total equipment cost	$30,200
Installation (in existing facility)	5000
Estimated fixed capital investment	$35,200

Continuous Run

Operating conditions used for the continuous run were pH of 3.0, oil-wash water flow ratio of 4:1 and no EDTA. Selection of the 3.0 pH was made on the basis of its less corrosive effect than the 2.5 pH. The flow ratio was chosen to give as low a ratio as possible and still maintain some excess design capabilities of the centrifuges and their wash water discharge piping.

Results obtained during the 28 day continuous run are summarized in Table II. Average sodium removal was 93.7%. Several samples of washed oil analyzed during the run contained 0.02-0.09 ppm Fe and 0.02 ppm Cu.

The quality of bleached oil produced by the recycle water wash system was equal to the quality of bleached oil produced using conventional washing techniques.

A sample of refined soybean oil washed by the regular method with fresh water and a sample washed by the recycle method were evaluated for their rates of hydrogenation in laboratory tests. Both samples were taken from the vacuum dryers at about the middle of the 28 day test. A portion of each sample was hydrogenated without bleaching, and another portion of each oil was bleached before it was hydrogenated. Samples hydrogenated 15 and 30 min were analyzed for refractive index and iodine value (Table III). The oil washed by the regular method and not bleached hydrogenated substantially faster than the recycle washed unbleached oil. After both oils were bleached, the difference in rate of hydrogenation was small. Soybean oil is usually bleached before commercial hydrogenation. In similar

TABLE VI

Estimates Operating Cost for Recycle Washing of Alkali-Refined Soybean Oil

Cost item	Dollars per day
Chemicals	
H_2SO_4, 66° Be', 240 lb at $0.0335 per lb	8.04
NaOH flakes[a]	3.08
Labor, 4 man-hr per day at $4.00 per hr	16.00
Maintenance, 6% on 35,200[b]	7.04
Resin usage, 20% per year on $1500[b]	1.00
Estimated processing cost	35.16
Estimated processing cost,[c] dollars per 100 lb oil	0.0048

[a]Based on 38 days of experimental data.

[b]Based on 300 days per year estimated production.

[c]Based on an estimated oil production of 720,000 lb per day.

hydrogenations made with samples taken during the preliminary 24 hr recycle washing tests, results were similar but there were smaller differences in hydrogenation rates between regular washed, unbleached and recycle washed, unbleached oil.

A sample of soybean oil that was recycle washed, bleached and deodorized (unhydrogenated) in plant equipment was evaluated by the Northern Laboratory taste panel. The bleached color of the oil was 0.4 (Lovibond red). The average odor and flavor scores of the deodorized (unstored) oil were 7.4 and 7.0, respectively, and after 4 days of storage at 60 C the scores were 6.1 and 5.3. The 8 hr AOM was 15.0. These values are similar to values usually obtained with commercial soybean oil and indicate the recycle washed oil is of acceptable quality.

During recycling of wash water, soluble material accumulates in the water. Two gallons of recycle water removed from no. 1 storage tank during the 28 day test was lyophilized in a freeze drier. The residue was a soft, brown, hygroscopic material, and the recycle water contained 2.4% of this material. Analysis gave the following values: total nitrogen (Kjeldahl) 1.54%, phosphorous 6.44%, reducing sugars after acid hydrolysis 16.0%, unsaponifiable 0.6%. Esterification of a sample with methanol and gas liquid chromatographic analysis of esters showed that the fatty acids had the composition of soybean oil. The soluble material is evidently largely phosphatides and related materials, but it includes no oil per se.

The ion-exchanger columns did not operate as long as they theoretically should before requiring regeneration. The two 8 ft^3 ion-exchange columns have a theoretical sodium removal capacity of 20.0 lb each. At an oil flow rate of 355,500 lb per day and a sodium removal level of 30 ppm from the oil, the column should last ca. 48 hr in theory and at least 24 hr in practice before requiring regeneration. From the data collected, the ion-exchange column lasted an average of only 8.9 hr. This indicates that regeneration acid may have been too weak or insufficient or that partial fouling of the resin by material in the recycle water lowered effective capacity.

Wasteload

Several 5 day BOD tests were run to determine the effectiveness in reducing the pollution load of the refinery of utilizing the recycle water wash method in processing the soybean oil. It was found that the load produced during each regeneration amounted to 16.9 lb of BOD (Table IV).

The average length of service for one column was 8.9 hr at an average flow of 14,500 lb oil per hour. Thus the BOD load using the recycle washing system amounted to 0.129 lb BOD per 1000 lb oil production.

Based on an average BOD of 10,400 mg/liter for the spent wash water and a wash water flow of 20% of the oil flow, a similar calculation for the normal refinery effluent showed that 2.08 lb BOD was produced for every 1000 lb oil production.

According to these calculations, it is possible to reduce the normal BOD load from an approximately six tank car per day refinery by 1.9 lb/1000 lb oil produced (94% reduction) by employing the recycle method of water washing.

Cost

For a plant installation in a 12 car per day (720,000 lb) refinery, the estimated fixed capital investment is $35,200, assuming that a suitable centrifuge is already available. The use of two 30 ft^3 columns in a fully automated ion-exchange system would require operational labor of ca. 4 hr per day including routine analysis of samples. With this amount of labor, the cost above the normal refinery expense is estimated to be $0.00488/100 lb of oil production (Tables V and VI). This is partially offset by a water savings in the amount of $0.00069/100 lb of oil production. This evaluation of the actual cost for a permanent installation of the water wash system is based on the plant test results described.

This procedure eliminates loss of oil during washing of the refined soybean oil, while the conventional washing produces an oil loss of ca. 0.5% equivalent to a cost of $0.05/100 lb of oil processed. Thus the recycle washing process can effect both a substantial reduction in BOD discharge and an appreciable savings in the cost of plant operation.

ACKNOWLEDGMENTS

Laboratory hydrogenations were done by G. Nofsinger, flavor evaluation by the Northern Regional Research Laboratory taste panel and 8 hr AOM by G. List. This work was conducted under a contract to Anderson Clayton Foods, Dallas, Tex., from the USDA and authorized by the Research and Marketing Act of 1946. The contract was supervised by the Northern Regional Research Laboratory, ARS.

REFERENCES

1. Eisenhauer, R.A., R.E. Beal and E.L. Griffin, Jr., JAOCS 47:137 (1970).
2. Beal, R.E., and V.E. Sohns, Ibid. 48:539 (1971).
3. Beal, R.E., and R.A. Eisenhauer, U.S. Patent 3,634,475 (1972).
4. Black, L.T., JAOCS 47:313 (1970).
5. List, G.R., C.D. Evans and W.F. Kwolek, Ibid. 48:438 (1971).
6. American Public Health Association, Inc., "Standard Methods for the Examination of Water and Wastewater," Boyd Printing Co., Inc., Albany, N.Y., 1962, p. 309,318.
7. "Official and Tentative Methods of the American Oil Chemists' Society," Third edition, AOCS, Champaign, Ill., 1964 (revised to 1972), Method Ca 5a-40.
8. Ibid., Method Cd 12-57.
9. Wheeler, D.H., Oil Soap 9:89 (1932).

[Received November 10, 1972]

NOTICE: This material may be protected by copyright law (Title 17 U.S. Code)

limited strictly to edible oils but are applicable also to petroleum-type oils. We have installed a two stage system at a refinery in Oklahoma, where the first stage is designed to, and in fact does, remove hydrocarbon-type oils from the waste stream without the use of chemicals, and the second stage is used to clarify the waste water. The first stage returns essentially all of the available hydrocarbon materials to the refinery where they are reprocessed. The second stage has effectively eliminated a large ponding system for final treatment of the waste water before it discharged to a federal system.

The electrochemical process has proven effective in removing fats and oils without the aid of chemicals at a large packing plant. The flow at this plant is 1200 gal/min. Even though the waste stream is contaminated with manure, blood, and has a fluctuating pH, it is still possible to recovery fat down to a level of 20 ppm, and this fat then is augured directly to a melter for rendering.

A fat recovery system also has been designed for an edible renderer. The fats, oils, and greases are removed in this case in a single stage operation from a level of 3000-5000 ppm to less than 100 ppm. The recovered fat then is passed through a skimmings thickener where the concentration is increased from 10-45% of hexane extractables. Control equipment which is installed at this plant enables the system to operate essentially without attention.

The process also has been installed in an inedible rendering operation which was not in trouble with the sanitary district. This installation was made at the request of the owner strictly for economic reasons: the fats and oils are money and the recovery from the sewer is profits.

Reprinted with permission from Journal of American Oil Chemists Society.

Treatment of vegetable oil refining wastes to conform to government regulation[1]

MOLLIE KAYE CANTRELL and HOWARD F. KELLER, JR., GBK Enterprises, Inc., Fullerton, California 92633

Historical and conventional methods for the treatment of vegetable oil waste water are described. The results obtained and the economics of the various processes for oil-water separation are reported. A process utilizing selective adsorption filtration is described. The new regeneration procedure for cleaning the filter media allows for its total reuse. The process produces effluent water which will conform to existing government regulations for oil content. Development of the filtration/regeneration process is described up to full-scale installation with test results.

INTRODUCTION

by-product recovery and pollution control method almost universally by industries which have significant amounts of fats and oils in their waste water streams. The method usually involves the combining of the various plant waste water streams and dumping into a common separation station. The separation station consists of a large pit equipped with bottom sludge removal equiment and a mechanical skimmer for removing the floating oils and fats. There is also a drain for taking off excess water. This recovery method is subject to overloading during peak production periods, is quite frequently a source of offensive odors, and produces neither high quality re-

surface more rapidly and completely than in a simple skimming tank. Heavier solids will still fall to the bottom.

The results, shown in Table II,

TABLE I

Typical Results of Skimming Method (1)[a]

Impurity:	BOD	SS	FOG
Input	4010	3680	3985
Output	2440	2700	3200
Percent removal	38	33	25

[a]BOD = biological oxygen demand, SS = suspended solids, and FOG = fats, oils, and greases. These are given in ppm.

TABLE II

TABLE IV

Direct Cost Comparisons for 500,000 Gal/Day Waste Water Treatment Systems

	Air flotation (with chemicals)				GBK Filter unit			
Cost factor	Required amount	Daily need	Unit cost	Total daily ($)	Required amount	Daily need	Unit cost ($)	Total daily ($)
Aluminum sulfate	500 ppm	2075 lb	6cent/lb	124.50	None	---	---	—
Polymer	2 ppm	8.3 lb	$2/lb	16.60	None	---	---	—
H_2SO_4 (concentrated)[b]	for pH 3-6	Maximin 12 gph	$60/ton	138.00	For pH 4 or less	---	---	138.00
NaOH (concentrated)	to neutral effluent	---	$60/ton	138.00	Same	---	---	138.00
Labor	1 man/24 hr	24 hr	$6/hr	144.00	4 Hr supervisory time/week	4/7 hr	8.00	4.57/da
Power	1370 kwh/day	---	$.015/kwh	20.55	1500 kwh/day	---	---	22.50
Steam[c]	3000 lb/	---	---	---	None	---	---	—
Disposal of oily sludge	gpd	---	$150/2100 gal	50.00	None	---	---	—

[a]For air flotation, the cost of treating 1000 gal water with chemicals is $1.27. For GBK system, the cost of treating 1000 gal water is $.69.
[b]Continuous use of acidulation waste water reduces acid consumption proportionately.
[c]Cost of steam varies according to the availability of excess steam in the facility.

TABLE V

Equipment Response to Various Treatments[a]

Treatment system	BOD	SS	FOG
Raw plant effluent	2635	1400	485
Anaerobic lagoon	475	580	105
Trickling filter	296	602	75
Final clarifier	125	110	35
Chlorine contact basin	60	90	15
Total plant (percent)	97	94	97

[a]BOD = biological oxygen demand, SS = suspended solids, and FOG = fats, oils, and greases. These are given in ppm.

indicate an improvement in grease reduction by using an air flotation cell, but the air flotation cell appears to perform ca. equally to gravity separation for removal of BOD and suspended solids.

The efficiency of the dissolved air flotation method of FOG, BOD, and SS removal from the waste water can be improved by the use of chemical flocculants and coagulants. In one test, alum and a synthetic polymer were used to enhance the performance of the method (1).

Table III gives the overall average results of an extensive series of tests using a combination of alum and polymer with dissolved air flotation. This test was performed simultaneously with the test for air flotation cells above, without chemicals.

Better BOD, solids, and FOG removal have been reported by some sources, when the chemical concentration is increased.

Table IV gives a cost analysis of this type of operation.

BIOLOGICAL OXIDATION

Biological oxidation methods sometimes are used for food processors as secondary methods for removing pollutants prior to discharging to a stream or sewer. Aerated lagoons, anaerobic lagoons, trickling filters, and activated sludge are commonly used methods, and all are familiar to vegetable oil processors.

These types of biological treatment systems can be efficient, but variable operating conditions, such as pH, temperature, and bacterial activity, can be difficult to control. Lagoons, of course, must be located out-of-doors and require considerable amounts of land area due to retention time requirements. All of the biological oxidation methods are subject to overloading during peak production periods, and any upset in operating conditions for the systems will require hr or days for correction.

In general, each food processing plant has not one, but a combination of methods for treatment of waste water. In one report (2), results were obtained by treating the raw plant effluent with the sequence of methods shown in Table V.

TECHNOLOGY OF POLLUTION CONTROL

As can be seen, all of the methods produce an improved waste stream. Unfortunately, government agencies now are requiring that the food industry reduce the total output of FOG, BOD, and solids even further. Regulations now in effect require FOG content of no more than 10 ppm in some cases. Other areas have FOG limits of 100 ppm or less. Surcharges are almost universally imposed on plants whose effluents contain a high BOD content. The application varies from state to state and from city to city but the effect is always to create an unnecessary added operating expense for the plant.

In the past, it has been economically unfeasible and politically unnecessary for the industry to be concerned with the removal of the very small remaining quantities of impurities in the waste water stream. Government standards were few and were not rigidly enforced, and the industry has been allowed to discharge relatively high amounts of pollutants with the waste water stream, while fines for violations were nominal.

Technology in industry has made tremendous advances in process improvements, increases in productivity and efficiency. With the advent of stricter antipollution legislation by governments throughout the world, it also has become necessary for the vegetable oil industry, as well as other food industries, to seek solutions for their water pollution problems. Recent government imposed standards for FOG and BOD content of waste water are strict, and these are being enforced more stringently than ever before.

While the technology of pollution control has taken large strides in many problem areas, new ideas for methods of oil-water separation have been few. This is, of course, one of the more difficult problems in the area of water pollution control. Skimming of the gross amounts of oil in the waste water is still an effective and economical method for the removal of oil. However, the limits now being imposed and enforced by the government require a more complete removal of oil and BOD than mere gravity separation can afford.

Ca. 5-10 years ago at the time of the beginning of stricter government regulations, filtration began to be reconsidered as a possibility for an effective and economically feasible method

of pollution control. For the removal of solids from liquids, the deep-bed filter always has been recognized as effective. It also is known that a granular type filter media used in a deep-bed filter can effectively remove minute quantities of oil from a water stream. However, the major drawback for using a filtration method for the separation of oil and water is that, until recently, there was no means whereby the filter media could be reused after it was saturated with the oil from the waste water stream. If the media has to be dumped each time the bed is saturated with oil, then the filtration method becomes very costly, even if highly efficient.

GBK PROCESS

Several years ago, a patent was issued for a method in which the filter media bed was cleaned by introducing solvent or steam into the media then passing it through the bed in the direction countercurrent to the liquid flow. For the petroleum industry, the above method for cleaning has proved to be satisfactory, and GBK has an agreement whereby they can sell this unique system.

GBK tried to apply the steam cleaning process to edible oil refinery water filters and was unsuccessful. The major problem encountered was due to the activity of the unsaturated oils compared to the petroleum oils. After several steam cleaning cycles, the filter media became cemented together by a highly polymerized varnish, caused by the steam cooking, and this was, of course, impossible to remove.

To avoid the above problem, a radical and novel method of chemical regeneration was developed and has become a part of the GBK oil-water separation process. This new process made feasible the use of a deep-bed filter with vegetable oil processors' waste stream. However, there were other important problems to be solved relating to the complete water pollution problems existing in the industry.

To arrive at the level of waste water purity desirable to conform to government regulations, it was necessary for GBK to develop a completely integrated, unique, water treating system for the edible oil industry. To this end, a process was developed which has the capability of removing and subsequently recovering virtually all of the fats, oils, and greases from an effluent stream. The heart of the treatment system is selective absorptive filtration combined with chemical regeneration of the filter media. The efficiency of the filtration method has been improved by GBK, by taking into consideration the many facets of the process. Each of these process areas was studied, tested, and changed, if necessary, to maximize the efficiency of the filtration process.

The first step in improving the filtration process was gaining an understanding of the theory of the selective adsorption process. The closest analogy to selective media filtration is chromatography. The mechanism is almost identical in that it is a surface absorption mechanism demonstrating a surface saturation migration potential, with total adsorptivity being proportionate to surface area. The only difference seems to be greater quantitative adsorption than would be dictated by the theory.

The quantity of oil adsorbed is a function of: (A) particle size distribution within the filter media, (B) flow rate thorugh the filter in gpm/ft^2, (C) oil content of the waste water stream, and (D) the effect of other constituents in the waste stream on the absorptivity of the oil.

As an example of the effect of particle size distribution, the following was observed in the quantity of oil adsorbed by two sands with the same mesh size nomenclature, but differing widely in their particle size distribution patterns. (Oil capacity of the bed was reached at the time oil breakthrough was observed in the effluent stream). The sands were both 30 mesh according to the suppliers, and flow rate was held constant at 10 gpm/ft^2. The feed fluid was refinery waste water containing 650 ppm FOG and 120 ppm solids (mostly bleaching clay). The two tests were run simultaneously so that variations in condition of the waste water feed stream could be ignored. Sand S retained 1.3 lb oil/ft^3 media at the time of oil breakthrough and sand M retained 6.8 lb oil/ft^3 media at the time of breakthrough. Equal volumes of wet sand were used for each test.

To demonstrate the effect of flow rate, the above beds were regenerated, and the flow rate was increased to 20 gpm/ft^2. Sand S retained 0.6 lb oil/ft^3 at breakthrough, with a pressure drop of 11 psi/ft media depth. Sand M retained 4.8 lb oil/ft^2 at breakthrough with a pressure drop of 5.2 psi/ft of media depth.

For all normal sand usage applications, the sands are identical. As a matter of fact, sand S is the most frequently used and most highly recommended, because it falls within the established National Filter Sand recommended ranges, while sand M does not.

The above noted differences in oil adsorption and throughput capacity in the two similar sand filter medias points out the necessity of properly designing the bed for the waste stream

TABLE VI

Plant Effluent Composition

Impurity source	Percent
Deodorizer water	91.7
Gravity separation basin	1.66
Water wash	1.66
Condensate	3.3
Acid waste water	0.83
Packaging	0.83

TABLE VII

Plant Effluent Response to Various Water Treatments[a]

	Feed		Product	
Sample number	FOG (ppm)	COD (ppm)	FOG (ppm)	COD (ppm)
1543	280	—	0.5	—
1608	815	2210	1.2	1580
1630	195	2340	2.8	1550
1700	260	—	2.6	—
1740	145	2930	39.0	1320
1810	750	2210	12.2	1060
1830	78	—	14.3	—
1900	60	—	19.4	—
2045	23.5	—	1.9	—
2115	16.7	—	0.6	—
2130	39.0	—	1.1	—
2145	39.0	—	0.2	—

[a]FOG = fats, oils, and greases and COD = chemical oxygen demand.

TABLE VIII

Fat, Oil, and Grease (FOG) Response to Treatment

Sample number	Pressure drop (lb)	FOG (feed) (ppm)	FOG (product) (ppm)
1630	15	45	12.7
1700	13	53	1.5
1754	14	3040	1.3
1803	15	480	0.9
1900	16	76	2.5
2000	24	49	1.6

in a particular situation rather than using a "universal" filter sand.

TEST DATA

Initial tests of the system of adsorptive filtration on refinery waste water were conducted on 1-3 gpm slip-

tion of 99.5% in FOG. The pH of the waste stream was adjusted to ca. 1.0 with H_2SO_4 injection, prior to filtration. Results of the test are shown in Table VIII.

Length of the experiment was 3-1/2 hr. The pump was shut off when pressure drop across the bed reached

entrapped solids, and the vessel goes on standby, having been regenerated without loss of adsorptive media. The next cycle of regeneration takes the second vessel off stream for oil recovery and solids removal. During the entire process, two vessels always are

performance of the filter system. For each individual plant, it is, therefore, necessary to make a specific evaluation of the waste water stream and the government standards which must be met. Then, we must institute plant operating changes and controls which will ensure consistency, within recommended limits, of the waste water feed to the GBK filter system.

The unit currently is being operated manually. Start-up data are incomplete at this time, but the following trends are clear: (A) surcharges for discharging the BOD to the city sewer have been reduced to a fraction of the former amount (from ca. $14,000 to $3,000 or less/month); (B) threat of fines for FOG discharge has been eliminated, as output from the filters falls within government standards; (C) oil recovered for resale has increased by 5000 lb/day over the old system (this oil has a current market price of 14.5 cents/lb); (D) the GBK unit performs as guaranteed when required operating conditions are fully met by the customer.

REFERENCES

1. Seng, W.C., in "Proceedings–Second National Symposium on Food Processing Wastes," Environmental Protection Agency, Washington, D.C., 1971, pp. 337-366.
2. Baker, Darrell A., and James White, in Ibid. pp. 289-312.

[Received July 5, 1974]

Operating experience with biological cooling towers[1]

WILLIAM M. NEUNER and ERNEST K. HOLT, Lever Brothers Company, New York, New York 10022

One of our major water pollution problems concerns the purification of, and disposal of or the bottling up of, waste water from our edible oil processing plant in Edgewater, N.J., and our fatty acids distillation plant in Hammond, Ind. It was decided to investigate the use of a cooling tower as a means of developing an environment for biota growth so that aerobic bacteria would feed on the organic matter present. This preliminary work was done in 1966 on a 30 gpm prototype tower in Hammond and a 720 gpm tower (modified) in Edgewater. As a result of this test work, Lilie Hoffman cooling towers, with high fill to volume ratio and abnormally large water basins, were purchased for our Edgewater plant and Hammond plant. The towers were commissioned in September 1972. The tower systems are fitted with the necessary controls to maintain proper basin water temperature along with automatic feed systems for the nitrogen and phosphorous required for satisfactory biota growth. The Edgewater tower, with a capacity of 3700 gpm, has performed satisfactorily with regard to chemical oxygen demand values and odor problems. There have been a few minor mechanical problems. The Hammond tower, with a capacity of 380 gpm, has had mechanical problems which have precluded sufficient continuous operation to assess its performance completely.

INTRODUCTION

In the refining of fats and oils for use in edible and soap products, high vacuums are employed. These vacuums generally are obtained by the condensation of steam in barometric condensers. Part of the process also may require steaming of the product simultaneously, and steam and organic vapors may be generated by the presence of a vacuum and heat. Therefore, the condensing water not only is heated; it picks up organic matter carried out as vapor or steam distilled from the reaction vessel.

One of our major pollution problems concerned either the purification and disposal, or bottling up, of this waste water, and studies were begun several years ago to solve the problem.

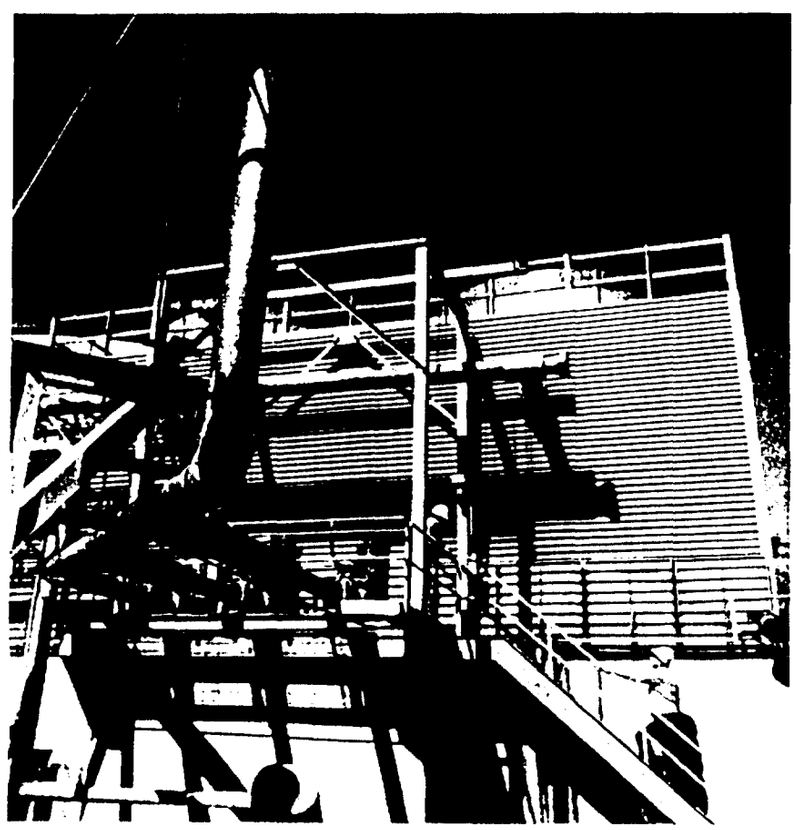

FIG. 1. Biological cooling tower shown under construction at Lever's Edgewater, N.J., plant. Piping in left foreground supplies water from cooling tower to edible process department.

[1]One of seven papers presented in the symposium, "Ecology–Practical Solutions to Environmental Problems as Practiced in the Fats and Oils Industry" at the AOCS Spring Meeting, Mexico City, Mexico, April 1974.

NOTICE: This material may be protected by copyright law. (Title 17 U.S. Code)

Reprinted with permission from Bioresource Technology (formerly Biological Wastes), Elsevier Science Ltd., Pergamon Imprint, Oxford, England.

Biological Wastes 27 (1989) 143–152

Biological Treatment of Palm Oil Mill Effluent using *Trichoderma viride*

Mohamed Ismail Abdul Karim & Ahmad Qalam Ahmad Kamil

Faculty of Food Science and Biotechnology, Universiti Pertanian Malaysia, 43400 UPM, Serdang, Selangor, Malaysia

(Received 4 February 1988; revised version received 8 May 1988; accepted 30 May 1988)

ABSTRACT

Research was undertaken to investigate the treatment of palm oil mill effluent (POME) using the fungus Trichoderma viride *to reduce its wastewater strength, and to recover the microbial mass. More than 95% reduction in Chemical Oxygen Demand (COD) of the POME was achieved after 10–14 days of fermentation. The fungal biomass produced from the POME was 1·37–1·42 g litre (dry weight) of mycelium with a crude protein content of 37·6–40·7%.*

INTRODUCTION

In Malaysia, palm oil mill effluent (POME) has been found to be one of the major sources of pollution from the agricultural industry. The palm oil mills in Malaysia generate annually about 9 million tonnes of effluent and the volume generated is expected to double by the year 1990 (Chan *et al.*, 1983; Yeow & Ahmad, 1985). The high organic pollutants of POME need to be treated before it can be discharged into streams or any other receiving waterbody. With the rising costs of pollution abatement and the stringent measures imposed on effluent standards, many palm oil mill operators may be forced to find alternative methods for pretreatment of the effluent prior to discharge for secondary or other treatment systems.

Biological treatment of POME to reduce the wastewater strength is one potential method that can be adopted to alleviate the pollution problem faced by the palm oil industry. Recently many researchers have resorted to

Biological Wastes 0269-7483/89/$03·50 © 1989 Elsevier Science Publishers Ltd, England. Printed in Great Britain

the use of micro-organisms to treat food processing wastewaters and POME (Church & Nash, 1970; Church *et al.*, 1973; Beuchat *et al.*, 1978; Lemmel *et al.*, 1979; Barker & Morgan, 1981; Karim & Sistrunk, 1984*a,b*; Suwandi & Mohd, 1984). Biological treatment of liquid effluents from food processing plants has been established for a number of years and is the principle on which lagooning, activated sludge, and trickling-filter systems are based. Church *et al.* (1973) have reported the successful use of the fungus *Trichoderma viride* (*T. viride*) in aerated lagoon and oxidation ditch to treat corn and pea canning wastes, and greater than 95% Chemical Oxygen Demand (COD) removal of the wastes was achieved. The fungi have the ability to convert dissolved and suspended organic matter into a mycelium that is high in protein content and which can be readily recovered by simple filtration or screening. Several researchers (Sinnappa, 1979; Wong *et al.*, 1980; Quah *et al.*, 1982; Ibrahim *et al.*, 1984) have also studied the anaerobic fermentation of POME. The anaerobic fermentation process often operates with relatively long hydraulic retention time which is needed to allow anaerobic bacterial digestion of POME to take place.

This paper deals with work that was undertaken to treat the POME by biological means using *T. viride* with the objectives of reducing the waste strength of the effluent and recovering the mycelial biomass produced by the fungus which could be used as a valuable source of protein for animal feed.

METHODS

Raw material

Fresh composite samples of the POME were obtained from an effluent pond at the Bukit Rajah Estate palm oil mill, Klang, Selangor, Malaysia.

Preparation of inoculum

Strains of *Trichoderma viride* ATCC 32086 were maintained on malt extract agar (Difco Laboratories, Detroit, MI) and used as stock cultures. Spores grown on the malt extract agar were harvested into 200 ml saline solution (0·85% NaCl) and the turbidity of the solution was adjusted to 75 formazine turbidity units (FTU) using a turbidity meter (Moniter Model TRM-LD-DIGITAL, Austria). The spore suspension having 75 FTU contained $2{\cdot}4 \times 10^6$ spores/ml measured by a haemocytometer. Five per cent (v/v) of suspension was used as inoculum. For mycelial inoculation, spores of *T. viride* were grown in malt extract broth, incubated at 30°C for 4 days, using an incubator orbital shaker (Labline Model No. 3521, Malrose Park,

IL) at 125 oscillations/min. Five per cent (w/v of sample) of the mycelium was used for inoculation of the effluent samples.

Fermentation experiment

POME was subjected to four different treatments as follows:

Raw POME (control).
Boiled POME (boiled for 10 min and cooled down to room temperature).
Raw POME with 5% inoculum of spores or mycelium separately.
Boiled POME with 5% inoculum of spores or mycelium separately.

Duplicate samples of 300 ml POME in 500 ml flasks were used for each of the above treatments and replicated twice. All the samples (not capped and left open in the culture flasks) were incubated in a shaker incubator (Labline Model No. 3521) at 125 oscillations/min at ambient temperature (28°C ± 2°C) for a period of 2 weeks. At intervals of 2, 4, 6, 8, 10, 12 and 14 days, samples, after settling for 30 min, were taken for analysis of COD and turbidity. The biomass weight and protein (% N × 6·25) content of the treated samples with fungi, as well as from the raw and boiled POME without fungi growing in it, were assayed. A Whatman No. 4 filter paper was used to filter the samples and the recovered biomass was analysed for protein and dry weight.

Analysis

The protein content and biomass weight were determined according to the *Standard Methods* (AOAC, 1980). Turbidity measurement as FTU was determined using a turbidity meter (TRM-LD DIGITAL). COD was determined according to the procedure described by Mercer & Rose (1968).

RESULTS AND DISCUSSION

Chemical oxygen demand (COD) reduction of treated effluent

POME treated with *T. viride* showed more than 95% reduction in COD value (final COD 44 and 56 mg/litre) with sporal or mycelium inoculum at days 14 and 10 of the incubation period respectively (Figs 1 and 2). The control samples without fungal inoculation had a COD reduction of 43–52%. The results indicated that the mycelial treatment was more effective than the sporal treatment of the POME in reducing the COD content. There was a slight difference recorded in terms of COD reduction found between

the raw and boiled treated POME samples. The idea of using boiled POME was to eliminate most vegetative cells of microorganisms present in the sample thereby reducing growth competition from the inoculated fungi. However, some spores and thermophilic bacteria which survived the boiling were found to grow in the effluent and they caused a decrease in COD of the effluent on incubation.

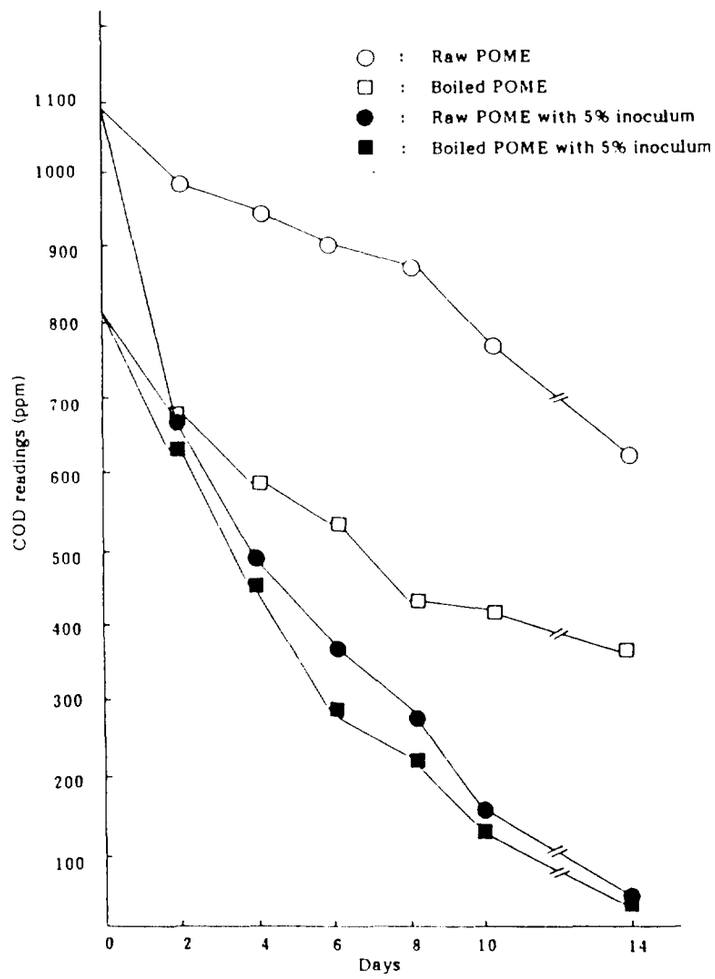

Fig. 1. Effectiveness of *T. viride* sporal inoculum on COD reduction of palm oil mill effluent (POME).

Turbidity of treated settled effluent

Greater reduction in turbidity of POME was observed with inoculated samples (Tables 1 and 2). Greater reduction in turbidity was observed with the settled POME treated with mycelium than with the sporal inoculation. The boiled treated samples had a slightly smaller decrease in turbidity than the raw samples.

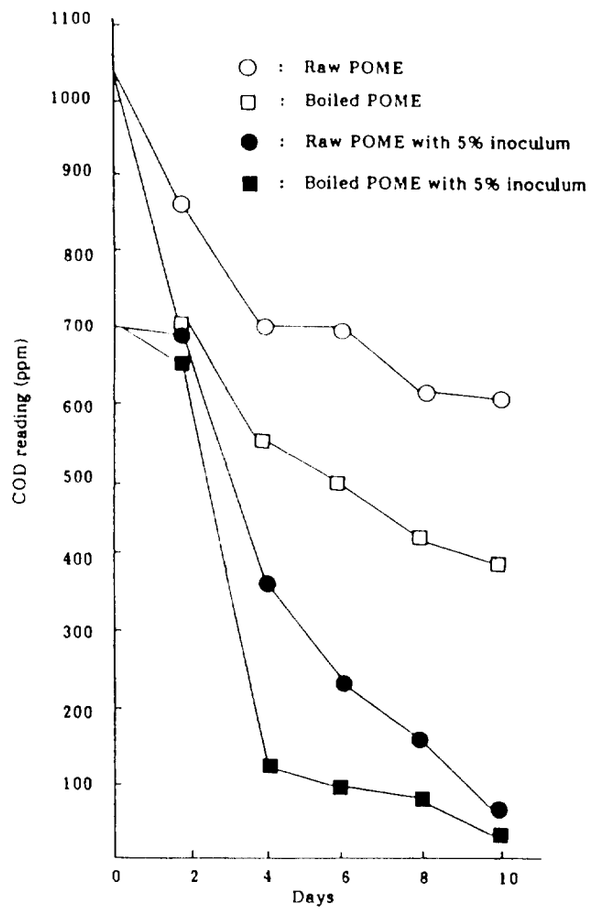

Fig. 2. Effectiveness of *T. viride* mycelial inoculum on COD reduction of palm oil mill effluent (POME).

TABLE 1
Effectiveness of *T. viride* Sporal Inoculum on Turbidity Reductions of Palm Oil Mill Effluent (POME)

Treatments \ *Incubation days*	*Turbidity (FTU) readings*								
	0	*1*	*2*	*3*	*4*	*6*	*8*	*10*	*14*
Raw POME (Control)	613	594	557	475	387	263	131	127	114
Boiled POME	649	634	614	526	413	308	188	164	148
Control with 5% inoculum	613	570	439	401	374	243	114	108	92·4
Boiled POME with 5% inoculum	649	591	488	336	238	147	85·8	74·2	70·6

Biomass production and protein content of raw and treated effluent

Results indicated that a somewhat higher recovery of fungal biomass was obtained from POME inoculated with the mycelium inoculum than the sporal inoculum (Figs 3 and 4). The fungal biomass recovered from the boiled and raw POME inoculated with the mycelium inoculum contained 1·42 and 1·37 g/litre (dry weight) mycelium, respectively after 10 days incubation (Fig. 3). On samples inoculated with sporal inoculum, 1·29 and 1·21 g/litre (dry wt.) mycelium were recovered after 14 days' incubation (Fig. 4). The biomass yield obtained from this experiment was found to be quite low as compared to the findings of other researchers using filamentous fungi grown on POME (Suwandi & Mohd., 1984; Barker & Morgan, 1981). However, their findings were based on using concentrated POME supplemented with carbon and nitrogen nutrient sources. One possibility of increasing the biomass recovery yield in our experiment is to add nutrient supplementation to the POME. However, the objective of achieving

TABLE 2
Effectiveness of *T. viride* Mycelial Inoculum on Turbidity Reductions of Palm Oil Mill Effluent (POME)

Treatments \ *Incubation days*	*Turbidity (FTU) readings*							
	0	*1*	*2*	*3*	*4*	*6*	*8*	*10*
Raw POME (Control)	664	657	655	535	497	414	385	263
Boiled POME	723	715	709	684	602	586	472	335
Control with 5% inoculum	664	651	509	385	140	105	89·7	76·1
Boiled POME with 5% inoculum	723	702	460	218	95·7	78·3	70·2	64·0

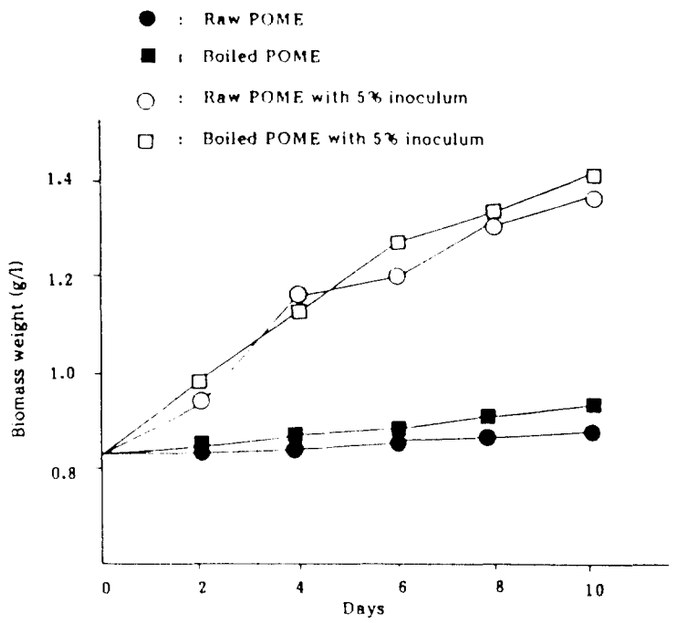

Fig. 3. Effectiveness of *T. viride* mycelial inoculum on biomass weight of palm oil mill effluent (POME).

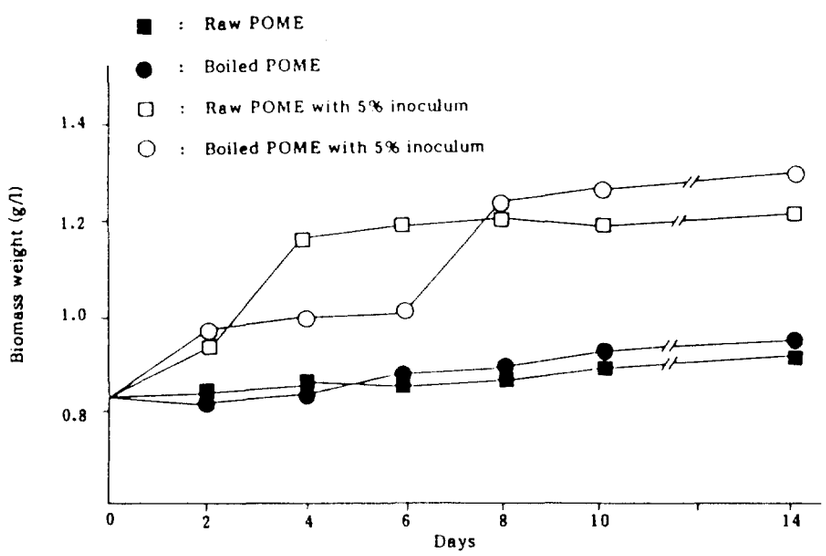

Fig. 4. Effectiveness of *T. viride* sporal inoculum on biomass weight of palm oil mill effluent (POME).

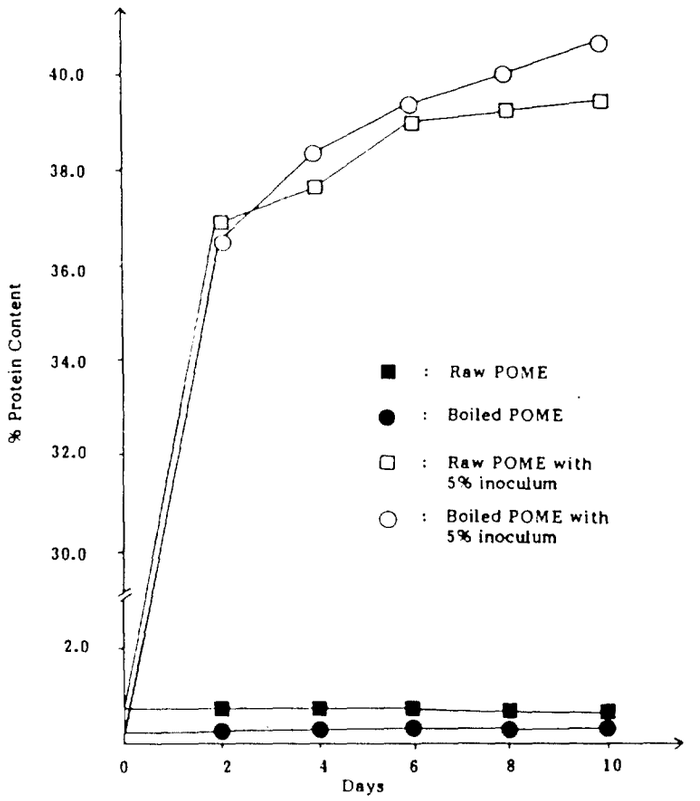

Fig. 5. Effectiveness of *T. viride* mycelial inoculum on protein content of palm oil mill effluent (POME).

maximum biomass production with greater reduction in COD of POME needs further study.

The crude protein content recovered from the fungal biomass of the treated POME was found to range from 37·6 to 40·7% using sporal and mycelial inoculation after 10 and 14 days' incubation (Figs 5 and 6). The crude protein content of the untreated POME was found to range between 0·42 and 0·55%.

CONCLUSION

Fermentation of the POME by microbiological means can be an alternative pretreatment technique in reducing the polluting strength of the effluent. Using the fungal (*T. viride*) inoculum, more than 95% reduction in COD of

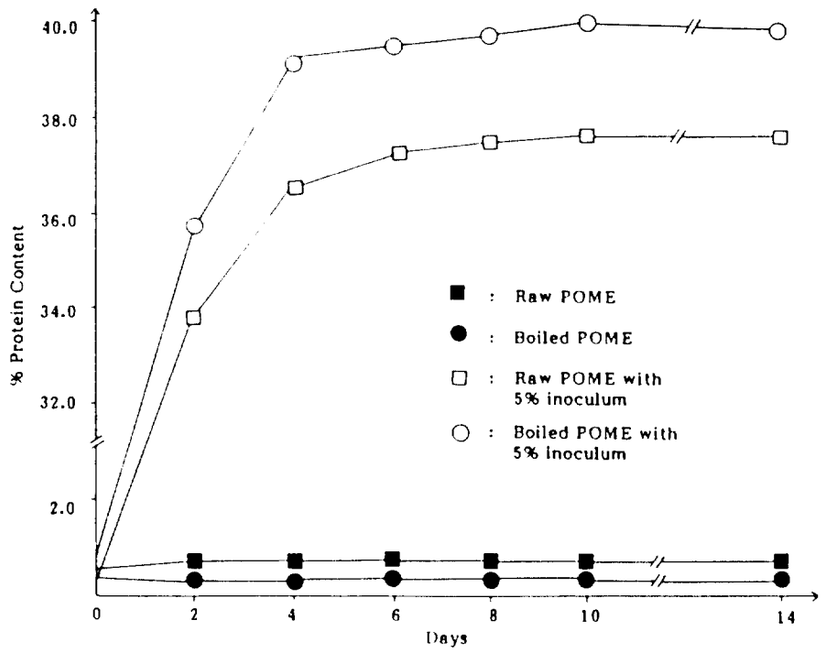

Fig. 6. Effectiveness of *T. viride* sporal inoculum on protein content of palm oil mill effluent (POME).

the POME could be achieved after 10–14 days of fermentation. There was little difference in COD reduction between the raw and boiled POME inoculated with fungi. The fungus was able to grow well and compete against the indigenous flora in the raw POME resulting in efficient reduction of COD upon incubation. The fungal biomass recovered had a 37·6–40·7% crude protein content, and a yield of 1·37–1·42 g/litre (dry weight) mycelium. Further research work is needed to exploit the use of other potentially available strains of micro-organisms for effective reduction of the pollution strength of POME, with a shorter incubation period and the possibility of a higher biomass yield.

ACKNOWLEDGEMENTS

The authors wish to thank Universiti Pertanian Malaysia for funding this project. They are also grateful to Bukit Rajah Estate Mill (Sime Darby), Klang for the supply of the effluent.

REFERENCES

AOAC (1980). *Official Methods of Analysis of the Association of Official Analytical Chemists*, (13th edn). AOAC, Washington, DC.

Barker, T. W. & Morgan, J. T. (1981). The utilization of palm oil processing effluents as substrates for microbial protein production by the fungus *Aspergillus oryzae*. *Eur. J. Appl. Microbial Biotech.*, **11**, 234–40.

Beuchat, L. R., Bough, W. A. & Young, C. T. (1978). Use of alkaline peeling effluents from vegetable and fruit processing operations by *Neurospora sitophila*. *J. Food Protection*, **41**, 24–7.

Chan, K. W., P'ng, T. S. & Mohd. Aminuddin, R. (1983). POME utilisation and its future research directions in the palm industry. In *Proc. Seminar on Land Application of Palm Oil and Rubber Factories Effluents*, pp. 23–45.

Church, B. D. & Nash, H. A. (1970). Use of fungi imperfecti in waste control. Water Pollution Series, 12060 EHT 07/70, Federal Water Quality Administration, U.S. Government Printing Office, Washington, DC.

Church, B. D., Erickson, E. E. & Widmer, C. M. (1973). Fungal digestion of food processing wastes. *Food Technol.*, **27**, 36.

Ibrahim, A., Yeoh, B. G., Cheah, S. C., Ma, A. N., Ahmad, S., Chew, T. Y., Raj, E. & Wahid, M. J. A. (1984). Thermophilic anaerobic contact digestion of palm oil mill effluent. *Wat. Sci. Tech.*, **17**, Amsterdam, 155–166.

Karim, M. I. A. & Sistrunk, W. A. (1984*a*). The use of selected strains of yeasts in the treatment of processing wastewater from lye-peeled and steam-peeled potatoes. *J. Food Process. Preserv.*, **8**, 175–89.

Karim, M. I. A. & Sistrunk, W. A. (1984*b*). Efficiency of selected strains of fungi in reducing chemical oxygen demand in wastewater from steam-peeled potatoes. *J. Food Process. Preserv.*, **8**, 211–18.

Lemmel, S. A., Heimsch, R. C. & Edwards, L. L. (1979). Optimizing the continuous production of *Candida utilis* and *Saccharomyces fibulinger* on potato processing wastewater. *Appl. Environ. Micro.*, **37**, 227–32.

Mercer, W. A. & Rose, W. W. (1968). Chemical oxygen demand as a test of strength of cannery wastewater. NCA–WRL. Report No. 816-56-B.

Quah, S. K., Lim, K. H., Gillies, D. & Wood, B. J. (1982). Sime Darby palm oil mill effluent treatment and land application systems. Presented at the PORIM Workshop on palm oil mill technology and effluent treatment, Kuala Lumpur.

Sinnappa, S. (1979). Treatment studies on palm oil mill waste effluent. *Proceedings of the International Conference on Water Pollution Control in Developing Countries*, Bangkok. Asian Institute of Technology, pp. 525–37.

Suwandi, M. S. & Mohd, A. A. (1984). Growth of *Penicillium chrysogenum* in palm oil mill effluent concentrate. *Proceedings of the Regional Seminar-Workshop on Biotechnology in Industrial Developments*, Universiti Pertanian Malaysia, Serdang, Selangor, Malaysia, 27–30 March.

Wong, K. K., Zain, O. M. & Abdullah, R. (1980). A national design for a once through thermophilic anaerobic digestion of palm oil mill effluent. *J. Inst. Engrs. Malaysia*, **27**, 8–18.

Yeow, K. H. & Ahmad, K. Y. (1985). Status of effluent utilization in Malaysia. *The Malaysian Agricultural Digest*, **3**(1) (Malaysia).

Low-cost wastewater treatment

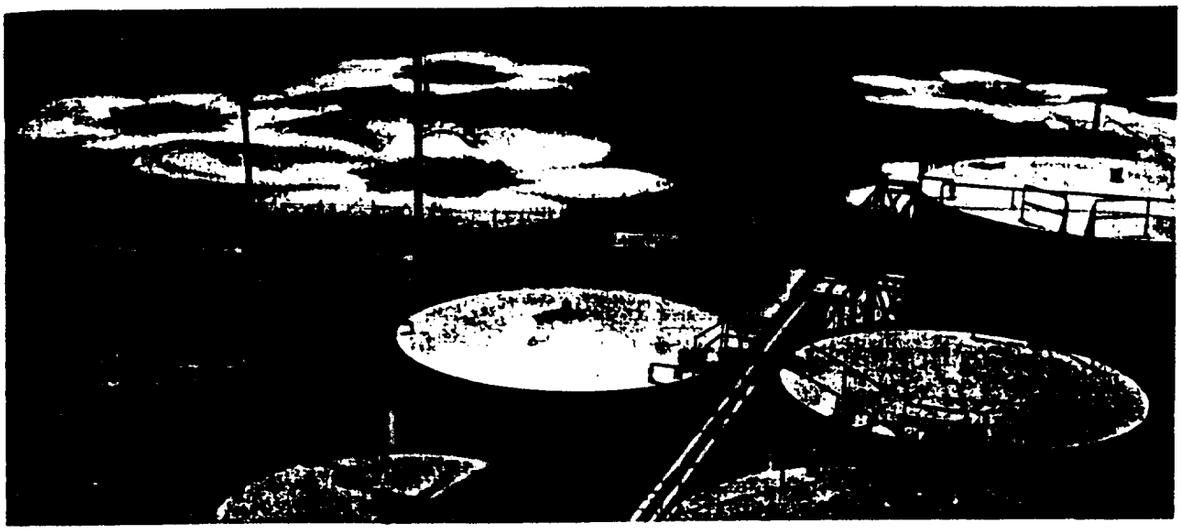

Multi-step treatment process at Lou Ana Foods includes this 11.2 million gallon aerated lagoon.

At Lou Ana Foods, simplicity and redundancy were the keys to designing a system to handle both current and future needs at minimal cost.

CHARLES E. MORRIS, Midwest Editor

What do you do when you have no wastewater treatment facilities at all and you're given just one year to comply with federal pollution-control standards?

That was the problem facing the new engineering team at Lou Ana Foods, Inc., nation's largest independent vegetable oil refiner located in Opelousas, La., back in June of 1976.

deadline—Lou Ana was operating a water treatment plant which not only met but exceeded NPDES (National Pollutant Discharge Elimination System) standards—and at a total cost of only $2.2 million.

During the first eight months of operation, typical BOD (biochemical oxygen demand) of untreated effluent plummeted from 10,850 mg/l to 16 mg/l after treatment. COD (chemical oxygen demand) fell from 38,333 mg/l to

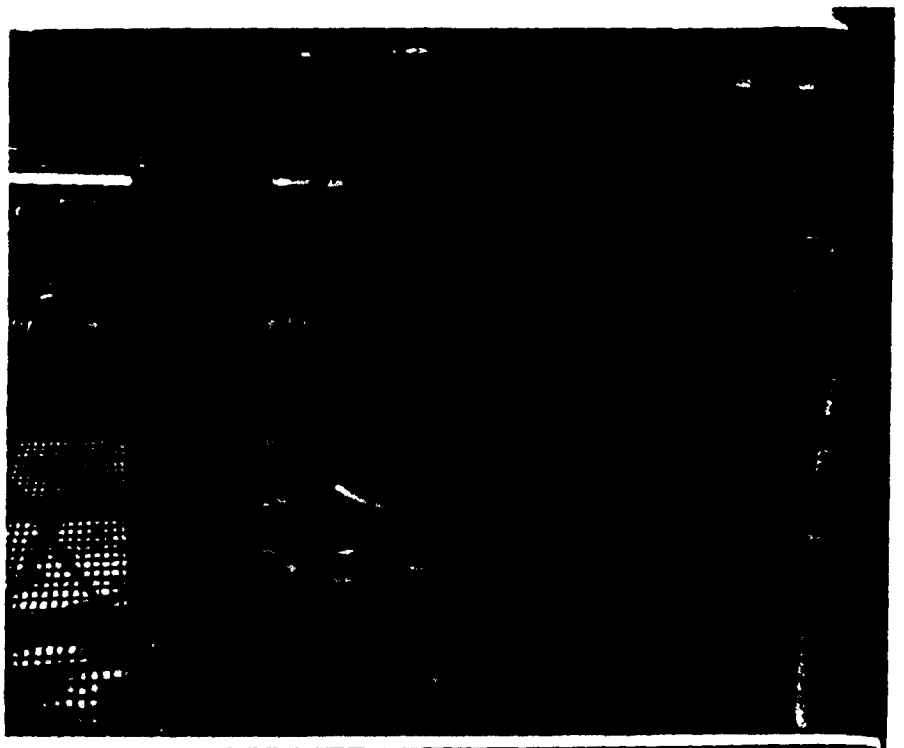

Gravity separation decanters are designed to minimize cost of recovering floating oils and free fatty acids. Decanters are made of fiberglass reinforced plastic to prevent corrosion and minimize maintenance. Oil floats to the top, where it is removed by a swinging suction pipe.

(consisting at that time of Smallwood, production director Ray Scott and processing department manager Warren Barnes) functioned as its own design engineer and general contractor, with certain assignments handled by consulting engineers Domingue, Szabo & Associates of nearby Lafayette, La. Lou Ana engineers designed the overall system and many of its components; collection, pre-treatment, sump-lift and gravity-separation systems, for example, are all original Lou Ana designs. The consulting engineers designed the biological (aerated lagoon) portion of the system, prepared bids for equipment and made detailed engineering drawings. "The price tag would have been horrible" had Lou Ana been forced to rely completely on outside contractors and engineers, said Smallwood, who conceptualized the entire system and designed many of its components.

Wastewater from the vegetable oil refining process contains by weight 0.5 to 5 percent free fatty acids and glycerine resulting from the breakdown of triglycerides. These substances in themselves are non-toxic and biodegradable but produce strong, rancid odors. These are joined in the wastewater stream by caustic soda (sodium hydroxide) used in the chemical refining process and sulfuric acid used in the soapstock acidulation process, and these can be harmful. Wastewater also contains phospholipids (mostly from soybean oil but found to lesser degree in corn, cottonseed and peanut oils); color pigments such as carotene, chlorophyll, and xanthophyll plus gossypol from cottonseed; some residual protein meal from the crude-oil extraction process; traces of sugars and other carbohydrates; additional impurities removed from acidulated soapstocks, a by-product of the caustic refining process marketed by Lou Ana as a feed ingredient. (Soapstocks, like any other fats, contain 9 calories per gram and are thus nutritionally valuable.)

Lou Ana's wastewater treatment system was designed not only to purify this type of effluent at an average 1977-78 volume of 121,000 gal. per day and to meet NPDES standards in effect at that time, but to handle the additional effluent load from a planned (since completed) $7 million expansion of refining facilities (which more than doubled production capacity) and to meet future

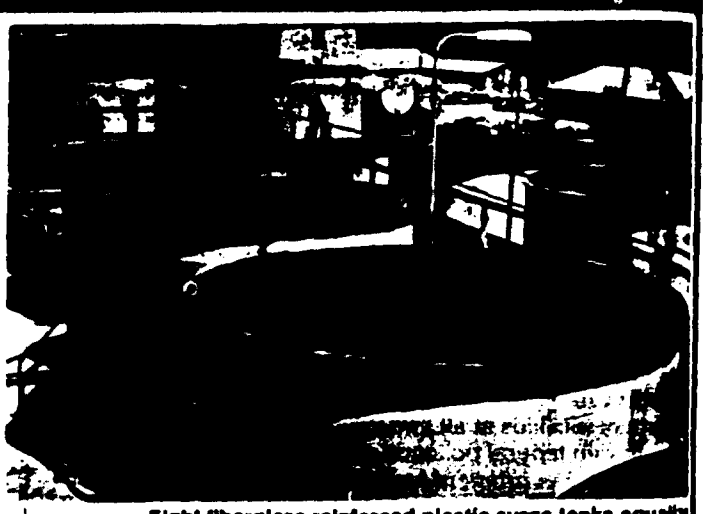

Eight fiberglass reinforced plastic surge tanks equalize wastewater flow to the dissolved air flotation unit. The tanks also function as settling tanks and gravity separators for further separation of water and oil.

EPA standards at minimum modification cost.

"You can't design a system for what your volume is today or what it will be next year, but for what it will be 5 or 10 years from now—plus a safety factor," adds owner chairman and CEO Ted Schad. "You have to provide adequate drainage and base your design on worst-case possibilities—and thank God we did," says Schad, recalling what can happen near the hurricane-prone Gulf Coast. "We had a record 15-inch rainfall in the area. Fourteen inches fell on Lake Charles; Opelousas had 5 inches in just a few hours. Our drainage system was able to handle it."

In addition to meeting these criteria, system design included prevention of possible oil spills plus control and counter-measures capability should a spill occur.

System components are of simple design to minimize maintenance and labor costs. Wastewater treatment facilities at most vegetable oil refineries are too elaborate and too complicated, said Smallwood, and are therefore not well maintained. Oil/water separation systems, for example, usually incorporate API separators with horizontal baffles requiring costly manual scrape-down

WASTEWATER TREATMENT . . .

1. *pH Adjustment:* Wastewater pH must be adjusted to a range of 2.0 to 3.0 to achieve optimum gravity separation of floating oils. A control loop in the pre-treatment sump monitors incoming wastewater and controls the addition of sulfuric acid into the sump to lower pH to the required degree.

2. *Gravity Separation Of Oils:* pH-adjusted wastewater is pumped from the pre-treatment sump to four decanters for separation of floatable oils. The wastewater stream enters the first two decanters (connected in parallel) through a horizontal distributing nozzle located in the center of each vessel. Oil separation occurs in the central zone of each vessel; oils float to the top and are pumped off daily by a swinging suction pipe. Water is continually drawn off via gravity underflow to the second two decanters, also connected in series, to repeat the process. Some solids settle to the bottom, from which sediment is periodically removed by valving one set of decanters out-of-service. The system is designed to operate on one set of gravity-separation decanters, since the succeeding surge tanks (see below) double as gravity-separation tanks. Gravity separation removes 90 percent of the pollutant load from the wastewater stream.

3. *Flow Equalization:* Eight 12,000-gal. capacity holding tanks accumulate a minimum of 16 hours wastewater at a flow rate of 85 gpm to equalize wastewater flow to the dissolved-air flotation unit. Flow equalization allows optimum operation of the DAF unit; the hold tanks also function as settling tanks for further removal of sediment and as gravity separators for further recovery of oil. As with the gravity-separation decanters, hold tanks can be individually valved out of service without disrupting system operation.

4. *Neutralization:* As wastewater is pumped from the hold tanks to the DAF process, caustic soda is injected into the water stream at the suction side of the transfer pump to neutralize pH to about 7.0. Neutralization is controlled by an automatic control loop; a manual control is provided for backup.

5. *Dissolved Air Flotation:* Neutralized water and a cationic polymer coagulant are discharged into a two-compartment flocculation tank equipped with high and low-speed mixing agitators. Water overflows from the flocculation tank into a coagulation tube centered in the DAF cell, then underflows through six exterior riser tubes to a peripheral collection ring at the top for recycle pressurization and discharge into the aerated lagoon. Water recycled at about 360 gpm is fully pressurized and injected with an anionic polymer coagulant aid before discharge back into the coagulation tube. Floating oils are removed by a rotating skimmer at the top of the tank. The DAF unit is sized to provide a surface loading of less than 3 gpm/sq. ft. Dissolved air flotation removes an additional 9 percent of the pollution load.

6. *Biological Treatment:* An aerated lagoon with a capacity of 11.2 million gallons and normal water depth of 16 ft. separated into two sections by a redwood baffle, accomplishes biological treatment and removes the remaining 1 to 2 percent of the pollutant load. Aeration is achieved by eight 40-hp floating aerator sprays. Liquid fertilizer is injected into lagoon influent to supply microbial life with nitrogen and phosphorous. The perimeter wall of the lagoon is lined with concrete to prevent erosion of the landscaped earthen dike forming the lagoon. At current influent rate, the lagoon provides 90 days retention time.

7. *Clarification:* Treated water is pumped from the lagoon to a clarifier for separation of biological sludge. Clarified water flows via gravity to a final monitoring station; sludge is recycled back to the inlet side of the la-

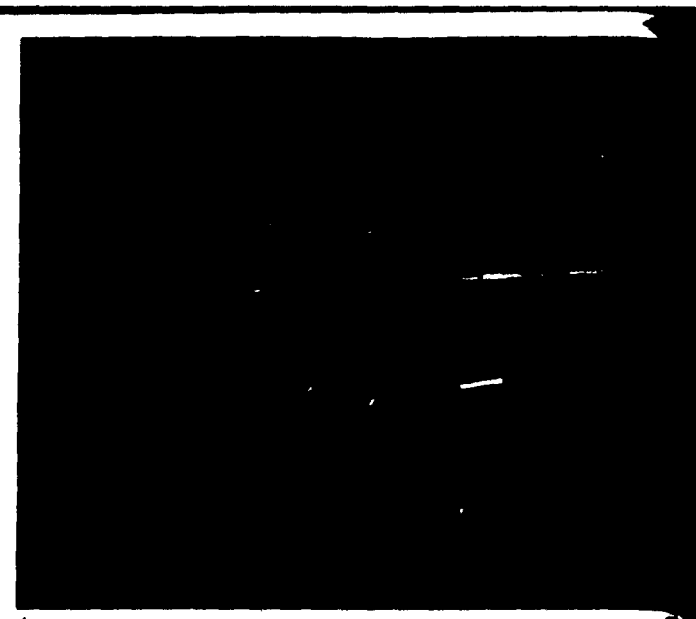

Former Lou Ana vice-president/technical services Ned Smallwood checks deodorized oil production schedule from deodorizer control board. Schematic shows operational status of the deodorizer.

WASTEWATER TREATMENT SYSTEM PERFORMANCE (1977-78)

Effluent Characteristics for Treatment Train Processes

Process	Concentration (mg/l) COD	BOD	O&G	TSS
1. Collection Pit	[illegible]	[illegible]	[illegible]	[illegible]
Adjustment	[illegible]	10,850	8,107	12,461
2. Decanter	[illegible]	[illegible]	2,635	9,014
3. Equalization	1,000	7,692	2,577	2,505
4. DAF	1,063	5,972	282	589
5. Aerated Lagoon	147	123	4	606
6. Clarifier	161	16	4	65

Performance for Each Treatment Train Process

Process	Percent Removal COD	BOD	O&G	TSS
1. Decanter	0	0	67.5	[illegible]
2. Equalization—Hold	60.9	29.1	78.1	[illegible]
3. DAF	73.0	22.4	51.1	[illegible]
4. Aerated Lagoon	86.5	97.9	98.6	[illegible]
5. Clarifier	70.6	87.0	0	[illegible]
6. Total Treatment System	99.6	99.8	99.9	[illegible]

Treatment Performance with Respect to NPDES Limits

	Minimum	Average	Maximum
Flow Rate (MGD)	0.066	0.121	0.178
BOD (lb./day)	4	17 (104)	47 (256)
O&G (lb./day)	1	4 (41)	10 (104)
TSS (lb./day)	17	68 (104)	156 (256)
pH	7.0 (6.0)	7.2	7.4 (9.0)

Note: *NPDES limit conditions given in parenthesis*

Wastewater, neutralized to pH 7.0 with caustic soda, is pumped to the flocculation tank, shown rising above the surge tanks in foreground, where remaining oils are coagulated with a cationic polymer coagulant before flowing into the dissolved air flotation unit.

goon. The clarifier is sized for an overflow rate of 450 gpd/sq. ft. of surface area and retention time of 3 hours.

8. *Final Monitoring:* Prior to outfall discharge, treated water flows through a monitoring station for flow measurement, sampling and recording of pH. Samples of treated effluent are analyzed weekly for BOD, COD, TSS and O&G by an independent, outside laboratory.

With 16 hours holding capacity, the DAF unit is operated only 8 hours per day; the clarifier is operated and treated water discharged only during periods when the DAF is operating. This allows operating those systems only during the day shift, when maximum attention and control can be given to their operation.

Original operating cost (as shown in Table) for the entire system is $6.89 per 1000 gallons of treated effluent. Depreciation has since increased this cost to a 1980-81 figure of $10.86 per 1000 gallons.

Skimmings, spent earth to farm

Vegetable oil residues from Lou Ana's wastewater plant and spent bleaching earth from the company's oil-bleaching operation are hauled by truck to a nearby, company-leased 140-acre farm and worked into the soil as fertilizer.

The oil residue—skimmings and sediment consisting of 55 percent water plus emulsified vegetable oil and fatty acids—are agricultural in origin and thus have soil-enrichment properties. Spent bleaching earth—betonite clay with about 25 percent (by weight) entrained vegetable oil—was formerly dumped as landfill on another nearby farm but has also been approved for soil enrichment by state health and environmental authorities. (Bleaching earth is used to remove color pigments—eg., carotene and chlorophyll—from refined oils.)

Spent earth disposal has traditionally posed a problem

(Continued on next page)

Doubles production capacity

Between 1976 and 1979 Lou Ana Foods increased its vegetable oil refining capacity from 190 million lbs. to 400 million lbs. per year with a $7 million capital-expansion program which includes:

—A major expansion and update of the caustic refining process;

—A new 30,000-lb. per-hour single-sheel deodorizer with steam refining capability, plus a continuous bleaching system, which became operational in June, 1979. Both systems were designed and built by EMI Corp. EMI designed the bleaching system around Lou Ana's spent-earth disposal method: Instead of the screw conveyor common to most systems, the Lou Ana plant features a unique spent-earth discharge chute from filters direct to dump trucks, which haul spent-earth daily to the Lou Ana farm.

—Ten million lbs. of crude-oil storage capacity—5 giant tanks of 2 million lbs. capacity each—were added to the 6 million lbs. capacity originally available.

—Eight million lbs. of deodorized oil storage capacty—4 tanks of 2 million lbs. capacity each—were also added to bring total refined-oil storage capacity to 15 million lbs. Additional tankage for both crude and refined oils was necessary to handle the many different types of oils refined by the company. Tank field expansion, completed early in 1980, includes diked concrete mats with underground drains linked to the wastewater system, as described earlier, to contain oil spills and rainwater runoff.

—Expansion of Lou Ana's fleet of leased jumbo tank cars (capacity 150,000 lbs. each) to 235; plus an overhead tank-car washing system to allow dual use of tank cars for hauling-in crude oils and shipping-out refined oils. "We're one of the few refiners who deal in so broad a range of oils," said Norman J. Smallwood, former vice-president of technical services at Lou Ana.

—Improved lab facilities. In addition to sampling and testing incoming crude-oil shipments for freedom from solvents (hexane used in the extraction process), FFA content, odor, flavor and appearance—and outbound oils for odor, flavor, appearance, color, grade and price—Lou Ana's laboratory now monitors each step of the refining, bleaching and deodorizing process hourly to assure that oils are within acceptable processing limits for each stage. Lab equipment includes moisture analyzers, spectrophotometers for color analysis, deep-fry units for testing the frying characteristics of each oil sample, and an atomic absorption instrument which measures trace metals and minerals in parts-per-million—"not a standard test in the industry," said Smallwood.

In addition to upgrading production, the new continuous deodorizing and bleaching facilities have improved by-product yield, Smallwood pointed out. Lou Ana markets deodorizer distillate to chemical manufacturers who in turn recover sterols and tocopherols (Vitamin E) from the distillate. Sterols—basic "building blocks" for hormones—have pharmaceutical applications, including birth-control pills. Vitamin E is a natural antioxidant used to extend shelf life in many food products. The deodorizer pulls-off about one-third of the tocopherols in the distillate, said Smallwood. ■

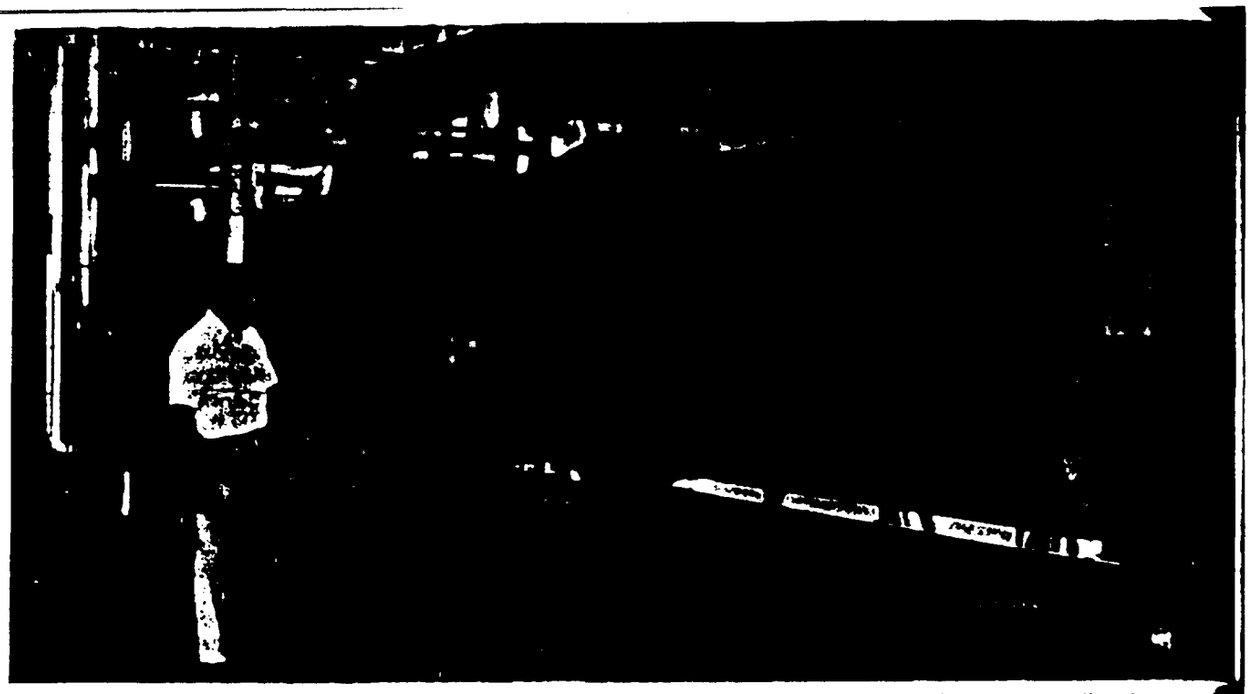

Vacuum bleaching filter deposits spent earth directly into chute for discharge into trucks.

for the vegetable oil industry, so officials from the USDA, state and Louisiana State University are all observing this project with interest and might participate in it. To date, Lou Ana has planted one soybean crop on its enriched farmland and plans to combine soil-enrichment with crop-rotation methods to achieve improved yields.

One problem: Spent bleaching earth is subject to possible spontaneous combustion—which can cause air pollution—and its use for soil enrichment could thus be "regulated out," Smallwood observed. "But manure is subject to spontaneous combustion, too," he pointed out. Biodegradable agricultural materials should not be classified as hazardous wastes."

More production, same wastewater

After solving the wastewater problem, Lou Ana turned its attention to updating and expanding its manufacturing plant to improve yields and become more competitive.

Between 1976 and 1979, the company increased its refining capacity from 190 million lbs. to 400 million lbs. per year with a $7 million capital expansion program and today "ranks among the top ten in throughput" of the approximately 90 vegetable oil refining plants in the nation, says Schad. (See accompanying article.)

Expanded production has *not* increased volume imposed on the wastewater plant, however, because of water conservation systems installed as part of the refinery update. Wastewater volume still averages only 120,000 gal. per day, even though refining capacity more than doubled.

This was accomplished by recovering and recycling process water and process steam as cooling water: Instead of using once-through potable water for cooling, soapy wash water from the continuous soapstock acidulation process is now recovered at the centrifuge discharge and recycled as cooling water. Steam from the continuous vacuum bleacher is condensed and also routed as cooling water through a closed-circuit system.

Fine-tuning the system

Performance of the wastewater system can be improved by optimizing treatment conditions for each type of oil refined, said Smallwood.

Wastewater resulting from refining cottonseed, corn, soybean, and sunflower seed oils is relatively easy to treat, he pointed out, but the more highly emulsified coconut and peanut oils in wastewater are more difficult to treat.

Emulsions in these wastes, however, can be better broken down by adjusting wastewater pH at the sump/lift station at the front of the system, and further by varying the polymer coagulants at the DAF station. FE

Annual Operating Expense for the Total Wastewater Treatment System (1977-78)

Expense Item	Cost
1. Labor	$ 29,370
2. Operating Supplies	
a. Sulfuric acid	20,872
b. Caustic soda	34,712
3. Flocculant agents	24,000
3. Maintenance (Material & Labor)	27,000
4. Utilities	
a. Steam	4,876
b. Electrical Power	49,304
5. Sludge Disposal	17,600
6. Miscellaneous	5,000
7. Depreciation	79,320
TOTAL	$291,854

Wastewater Treatment Cost $6.89/1,000 gallons

NOTICE: This material may be protected by copyright law. (Title 17 U.S. Code)

Reprinted with permission from Water Science and Technology, Elsevier Science Ltd., Pergamon Imprint, Oxford, England.

Wat. Sci. Tech. Vol. 22, No. 9, pp. 241–248, 1990.
Printed in Great Britain. All rights reserved.

0273–1223/90 $0·00 + ·50
Copyright © 1990 IAWPRC

A CASE STUDY ON SUNFLOWER SEED OIL INDUSTRIES WASTE CHARACTERIZATION, CLASSIFICATION AND TREATMENT

Füsun Şengül

Dokuz Eylül University, Faculty of Engineering and Architecture, Department of Environmental Engineering, Bornova, Izmir, Turkey

ABSTRACT

The sunflower seed oil industry is one of the most important industrial sectors. As a part of the agro-industry, sunflower seed oil production makes a significant contribution to environmental pollution in Turkey. A lot of research studies are known to be performed on the characterization and treatment of olive oil production wastes in Turkey, but the nature, amount, waste loads and treatment of the wastewaters produced by sunflower seed oil industries have not been studied to a great extent.

In this study, a typical sunflower seed oil refinery in the city of İzmir was selected as representative of this sector. Method of production is evaluated and the refinery is investigated for the characterization of its wastewaters. During the first part of the test program, quality of combined and separate raw effluents was investigated. Possible physical-chemical treatment alternatives were studied using bench-scale laboratory models. Based on these studies, the most practicable and efficient combination of treatment operations and processes were pointed out. Waste segregation possibilities for minimization of wastewater quantities are investigated. In these investigations treated effluent quality has been evaluated with respect to the discharge parameters set by the present Turkish environmental legislation.

KEYWORDS

Sunflower seed oil refinery effluents; wastewater characterization; emulsion breaking; acid cracking; chemical coagulation.

INTRODUCTION

Turkey produces above 1 million tons of sunflower seed according to 1985 projections of the State Statistics Institute. Approximately 300 000 tons of raw and 110 000 tons of refined edible oil have been produced in the same year. (DIE, 1985; DPT, 1985).

The raw sunflower seed oil can be obtained by using one of the following methods: mechanical press method, press-extraction method and direct extraction method. All the three methods are in use in Turkey for the production of raw sunflower seed oil. Press-extraction method is the most widely used method in Turkey, but most of the sunflower seed oil is produced in primitive presses having a total press capacity of 150 000 tons, working only a few months during the year. They have small capital investments, but are not efficient in production. More modern edible oil plants use up-to-date extraction processes for the production of sunflower seed oil, too. Three such plants are operating in Trace and there are two more in the Marmara Region (TÜBİTAK, 1984).

Effluents of sunflower seed oil refineries originate from neutralization, winterization, condensation processes and cooling operations. At the neutralization stage impurities in the raw oil are settled with caustic soda and the settled material is removed. Thus, wastewaters originating from the

neutralization process are the most polluted ones produced during the refining of oil.Temperatures of these effluents are between 50 and 70°C. Amount of wastewater generated at this stage is 10-20 % of the oil charged into the neutralization boiler. Other wastewaters produced from refineries are wash waters, which do not have as high pollution loads as the neutralization process wastewaters. Effluents of the winterization process are obtained during the cleaning of press filters and discharging of boiler waters. Refining of raw oil consists of a series of operations utilizing pressurized steam; thus condensation and cooling waters are also produced as wastewaters. Amounts of such waters are too high, but their pollutant concentrations are weak. Total amount of effluents is 32 - 46 % of soap production on a weight basis. As in the soap production caustic soda is used; soap production wastewaters contain high alkalinity, high turbidity, and suspended solids, as well as high COD and BOD_5 values.

OIL AND GREASE REMOVAL METHODS

Control of oil and grease is a stringent requirement of municipal authorities responsible for permitting connection of industrial wastewaters into the sewer system. Oil and grease tend to clog the sewer pipes and pumps and create difficulties in the municipal wastewater plants.Thus oil and grease limits are to be considered along with other indicator parameters such as BOD, pH, total suspended solids in sewer discharge standards. Industries are asked to remove oil and greasy material from their wastewaters in order to utilize the economic and other advantages of pretreatment and joint treatment. In domestic wastewaters, oil and grease concentrations may range from 30 - 50 mg/l, whereas wastewaters from communities with industrial contributors usually have higher concentrations (Tsugita and Ellis, 1981).

Free oil and grease which is not emulsified, presents no serious problem with respect to its removal from water because it will tend to float and agglomerate. The surface layer of oil and grease can then be mechanically skimmed off the surface. Emulsified oil, however, stays in suspension causing severe separation problems. That is why oil and grease treatment may be categorized into two stages: first-stage treatment can be utilized to separate free flotable oil and grease from water. At this stage, the treatment process involves gravity separation of the greasy material, which is equally effective in removing greases and non-emulsified oils. The simplest form of this first-stage treatment is the grease interceptor or grease trap. The typical process for oil and grease removal, particularly in situations where emulsification exists, is a gravity separator followed by a second-stage unit using one of the several methods for breaking the oil and grease emulsion that passes through the first - stage unit. In the second stage physical, chemical electrical and biological methods exist for breaking oil and grease emulsions. Chemical methods are presently in wide use, in conjunction with physical removal methods. Emulsions can be broken by chemicals that will balance or reverse the surface tension on each side of the interfacial film, neutralize stabilizing electrical charges, or precipitate emulsifying agents. Common chemicals that have been utilized to break emulsions or coagulate the colloidal particles include alum, ferrous sulfate, ferric sulfate or chloride, sodium hydroxide, calcium chloride, sulfuric acid, lime, soda, borax, sodium sulfate and commercial organic treating chemicals. After chemical additions freed oil and grease is concentrated and removed by a suitable physical process such as dissolved air flotation. Coagulation utilizing aluminum or iron salts has been effective for de-emulsifying oily wastes, but the precipitated sludges are difficult to dewater and the volume of sludge generated and requiring ultimate disposal creates an additional problem (Eckenfelder, 1980).

Physical methods used to break emulsions include heating, centrifugation and filtration. Centrifugation breaks oil emulsions by separating the oil and water phases by centrifugal force. Such centrifugation procedures are best applied to oily sludges or small volumes of oily wastewaters. Filtration has also been used with some success, as have high-rate sand and diatomaceous earth filters (Tsugita and Ellis, 1981).

CHARACTERISTICS OF WASTEWATERS ORIGINATING FROM SUNFLOWER SEED OIL PRODUCTION IN TURKEY

In this study a typical sunflower seed oil refinery in the city of İzmir was selected to represent the edible vegetable oil industries. In the plant, 5000 tons of sunflower seed oil and 2000 tons of soap were produced in 1987. Raw oil is supplied from Trakya Region. Refined sunflower seed oil is sold to the inner and southern regions of Anatolia. Refining processes which are used in the plant are neutralization, drying, decolorization, boiling, deodorization, cooling and winterization. A mixture of municipal and ground water is used at the rate of 40 m^3/day, of which 30 m^3/day is discharged as wastewater. The sources of wastewaters are mainly neutralization and soap production processes.

In the city of İzmir, sewer discharge limits apply to industries located within the Metropolitan area. Therefore wastewaters of this edible oil refinery must be pretreated for oil and grease removal. Before selection of a pretreatment process scheme, a study for characterization and treatability of the edible oil refinery wastewaters must be performed. Wastewater characteristics of this selected sunflower seed oil factory were examined by the DEU. Department of Environmental Engineering during years 1986 and 1987. Experimental results are submitted in Table 1 (DEU, 1986, 1987).

TABLE 1 Wastewater Characterization of the Sunflower Seed Oil Factory

WW sample	pH	BOD (mg/l)	COD (mg/l)	Oil-grease (mg/l)	Suspended solids (mg/l)
Soap prod. (18.3.1986)	11.5	33000	71000	6455	9070
Soap prod. (8.4.1986)	12.6	70000	100800	31690	13450
Refining (16.5.1986)	12	-	29920	15045	-
Composited	12.4	-	39360	35400	-

In another study, the same properties of wastewaters originating from different processes of the same factory were studied. The results are summarized in Table 2 (Oktay, 1986). Different samples taken at different dates are numbered as I and II.

TABLE 2 Wastewater Characteristics of Sunflower Seed Oil Refinery Processes

WW sample	Temp. (C)	Oil-grease (mg/l)	BOD (mg/l)	COD (mg/l)	SS (mg/l)	pH
Neutralization process wastewaters						
I	65	145520	155800	275000	-	13.8
II	60	132700	143600	270800	-	13.7
First wash waters following neutralization						
I	50	3540	4760	9280	-	13.3
II	55	3720	4870	9630	-	13.5
Second wash waters following neutralization						
I	56	3320	3750	8780	-	12.6
II	55	3250	3700	8690	-	12.5
Winterization process wastewaters						
I	70	350	525	980	-	11
II	75	525	840	1430	-	12
Condensation process wastewaters						
I	35	40	60	35	-	7
Soap production wastewaters						
I	55	420	65000	120000	13550	13.4
II	65	740	77500	140000	12500	13.9

In a third program aiming at the wastewater characterization of this refinery, wastewater samples from different production stages were collected at different dates and analyzed. Table 3 shows the results of this last study.

During the experimental studies COD, BOD_5, Oil and Grease and Suspended Solids determinations were carried out according to the techniques given in American Standard Methods (APHA, 1981).

TABLE 3 Wastewater Characterization of the Sunflower Seed Oil Factory Located in İzmir

WW sample		pH	Oil-grease (mg/l)	COD (mg/l)	SS. (mg/l)
		Refining process wastewaters			
I	(4.11.1988)	11.0	597	7840	-
II	(19.12.1988)	11.3	230	1040	-
III	(3.5.1989)	10.0	1012	3360	433
		Soap production wastewaters			
I	(4.11.1988)	12.5	166	19200	-
II	(19.12.1988)	12.0	380	18640	-
III	(3.5.1989)	11.3	564	48000	1766
		Combined wastewater			
I	(17.10.1988)	13.0	2900	13600	240
II	(3.5.1989)	12.0	688	5440	845

MODEL STUDIES ON TREATABILITY OF WASTEWATERS

Physical-chemical treatment studies were carried out on composite samples obtained by combining effluents from several processes of the refinery on the first run and on combined wastewaters from soap and refinery processes. These studies were conducted by two groups of researchers in the scope of dissertation thesis works (Oktay, 1986; Yıldırım and Sancar, 1988). A laboratory bench-scale test model was used in both of the studies, however, coagulants and coagulant aids used in the jar tests were different in both cases. In the first study, many coagulants and polyelectrolytes were tested for the treatment of composited wastewaters of the sunflower seed oil factory. After determining the optimal test conditions, coagulation efficiencies have been found by adding appropriate doses of $FeSO_4$ and $FeSO_4$ and A-470 type anionic polyelectrolyte at pH 6.5. Results obtained by these chemicals are given in Table 4.

TABLE 4 Jar Test Results With $FeSO_4$ and $FeSO_4$+Anionic Polyelectrolyte

Coagulant dose (g/l)	Oil-grease Eff. conc. (mg/l)	Oil-grease Removal eff. (%)	Chemical Oxygen Demand (COD) Eff. conc. (mg/l)	Chemical Oxygen Demand (COD) Removal eff. (%)
	Ferro sulfate ($FeSO_4$)			
0	31500	-	115000	-
0.5	11340	65	51750	59
1.0	9130	71	47150	65
1.5	7870	75	35650	69
2.0	7250	77	27600	76
3.0	9750	69	41400	64
	Ferro sulfate+anionic polyelectrolyte			
1.0 g/l +2 mg/l	9450	70	39100	66
1.5 g/l +2 mg/l	8500	73	33350	71
1.5 g/l +3 mg/l	8200	74	31050	73
2 g/l +3 mg/l	7250	77	28750	75
2g/l +4 mg/l	8800	72	35650	69

When alum was used as a coagulant, the optimum pH range was found to be between 6.5 to 7.0. Lime and alum were added until the pH reached 7.0. Results of this experiment are presented in Table 5.

Chemical coagulation with lime was also tried in these effluents. Again, pH of the wastewater sample was reduced to pH= 2.0 by adding concentrated H_2SO_4 and then lime. During the test, 90 % pure reactive lime ($Ca(OH)_2$) was used as coagulant. Lime and cationic polyelectrolyte addition alternative was also tried. The results are given in Table 6.

TABLE 5 Jar Test Results With Alum and Alum+Cationic PE (K-570)

Coagulant dose (g/l)	Oil-grease Eff. conc. (mg/l)	Oil-grease Removal eff. (%)	Chemical Oxygen Demand (COD) Eff. conc. (mg/l)	Chemical Oxygen Demand (COD) Removal eff. (%)
Alum ($Al_2(SO_4)_3.18\ H_2O$)				
0	41000	-	144000	-
0.5	12700	69	43100	70
1.0	11100	73	34600	76
2.0	6200	85	18800	87
3.0	1700	96	4000	97
4.0	1800	96	4800	96
5.0	2250	94	10000	92
Alum+Polyelectrolyte				
0	41000	-	144000	-
2 g/l +3 mg/l	6450	85	28900	80
3 g/l +3 mg/l	2400	94	7100	95
3 g/l +4 mg/l	3300	92	11500	92

For the treatment of wastewaters of sunflower seed oil factory which were examined in this study, acid cracking for de-emulsification plus chemical coagulation methods have been used. First, the pH of the oily wastewaters was lowered to pH= 2.0 with the help of concentrated sulfuric acid. After breaking the oil and grease emulsion, freed oil and grease were removed by phase separation and then chemical coagulation method was applied. By using the jar test apparatus, coagulant and polyelectrolyte doses have been determined.

TABLE 6 Jar Test Results Obtained with Lime and Lime+Cationic Polyelectrolyte(K-570)

Coagulant dose (g/l)	Oil-grease Eff. conc. (mg/l)	Oil-grease Removal eff. (%)	Chemical Oxygen Demand (COD) Eff. conc. (mg/l)	Chemical Oxygen Demand (COD) Removal eff. (%)
Lime ($Ca(OH)_2$)				
0	29700	-	98000	-
3.0	14800	50	46050	53
4.0	10400	65	35300	64
5.0	3250	89	9750	90
6.0	1800	94	5100	95
7.0	2950	90	10800	89
Lime + nonionic polyelectrolyte				
0	29700	-	98000	-
5 g/l +2 mg/l	5900	80	18600	81
5 g/l +3 mg/l	4200	86	15600	84
5 g/l +4 mg/l	4800	84	16000	84
6 g/l +2 mg/l	3300	89	7800	92
6 g/l +3 mg/l	3000	90	10000	89
6 g/l +4 mg/l	2900	90	10800	89

In this series of experimental studies, the characteristics of the effluents of a sunflower seed oil factory were re-examined as presented in Table 5.

In performing the treatability study in this program acid cracking for de-emulsification of oil and grease was conducted as a separate process. At this stage, pH of the effluents was reduced to 2.0 and the freed oil and grease was removed by phase separation. The results of acid cracking method are given in Table 9. Coagulation with lime and polyelectrolyte was tried after the pH of the supernatant was adjusted to pH= 6.0, pH= 7.0 and pH= 8.0 at different series. At each series, selected doses were applied in separate beakers and anionic-type polyelectrolyte was added.

In the first series of tests, composited effluents from several processes from the oil refinery were treated. Chemical coagulation process consists of 2 minutes of rapid mixing with lime solution, then 45 minutes of slow mixing, with 60 min for settling. When $FeSO_4$ was used as coagulant, efficiencies of 76 % for COD and 77 % for oil and grease with 2 g/l $FeSO_4$ were found (Table 4). If alum was used on the other hand, efficiencies obtained were 96 % oil and grease removal and 96 % COD removal (Table 5). Results with lime and lime+nonionic polyelectrolyte are given in Table 6. Best efficiencies were 95 % for COD and 94 % for oil and grease.

In the second part of the treatability studies, efficiencies obtained after sulfuric acid addition to break emulsions and subsequent phase separation are found to be higher. These results are given in Table 7. For this alternative process removal efficiencies obtained for oil and grease were 86-96 % and for COD 52-57 %. When this first-stage treatment is followed by chemical coagulation utilizing lime or aluminum salts this process is shown to be more effective for the wastewaters, especially if lime and anionic polyelectrolyte (Praestol 2430) were used for pH adjustment and effectiveness of coagulation increases (Table 8).

TABLE 7. Test Results of Acid Cracking Method

Wastewater Sample (mg/l)	pH	Oil-grease Eff. conc. (%)	Oil-grease Removal eff. (mg/l)	Chemical Oxygen Demand (COD) Effluent conc. (%)	Chemical Oxygen Demand (COD) Removal eff.
Combined ww (17.10.1988)					
Raw ww	13	2900	-	13600	-
oil skimmed	2	360	86	6400	53
Refinery process ww (4.11.1988)					
Raw ww	11	597	-	7840	-
oil skimmed	2	24	96	3360	57
Soap production ww (4.11.1988)					
Raw ww	12.5	166	-	19200	-
oil skimmed	2	18	89	9300	52

TABLE 8. Results of Chemical Coagulation Carried out with Lime and Polyelectrolyte After the Removal of Oil and Grease from the Composited Sample (17.10.1988)

Chemical addition (mg/l)	Oil-grease Eff. conc. (mg/l)	Oil-grease Removal eff. (%)	Chemical Oxygen Demand (COD) Eff. conc. (mg/l)	Chemical Oxygen Demand (COD) Removal eff. (%)
0 (Raw ww.)	2900		13600	
pH= 6.0				
6 mg/l PE			1920	86
10 mg/l PE	200	93	1760	87
12 mg/l PE			1440	89
14 mg/l PE			1600	88
100 mg/l Alum+ 10 mg/l PE	870	80	2680	80

Results obtained at the second part of the study are given in Tables 7,8,9. In this series of studies, refinery and soap production effluents are treated separately. Test results indicate that acid cracking and oil separation is to be followed by lime + polyelectrolyte coagulation. Then, sludge volumes to be formed from the treatment of refinery wastewaters will not be as high as the amount of sludges to be obtained from the treatment of soap production wastewaters.

TABLE 9. Experimental Results of Acid Cracking + Chemical Coagulation Tests

Wastewater sample	pH	Oil-grease Eff. conc. (mg/l)	Oil-grease Removal eff. (%)	Chemical Oxygen Demand (COD) Eff. conc. (mg/l)	Chemical Oxygen Demand (COD) Removal eff. (%)
Refinery process wastewater (12.4.1989)					
Raw ww	12	4840	-	6400	-
oil skimmed	2	80	98	-	-
+lime added oil skimmed	6	60	-	488	-
+lime added oil skimmed	10	30	99.4	400	93.4
+3.0 mg/lPE	6	30	99.4	432	93.3
Refinery process wastewater (3.5.1989)					
Raw ww	10	1012	-	3360	-
oil skimmed	2	800	21.0	2000	40.5
oil skimmed +lime added	7.6	100	90.1	[illegible]	88.0
oil skimmed +lime added	10.7	-	-	350	89.6
Soap production wastewater (3.5.1989)					
Raw ww	11.8	564	-	48000	
oil skimmed	2	460	18.4	25600	46.7
oil skimmed +lime added	7	-	-	17600	63.0
oil skimmed +lime added	10.6	250	55.7	16000	66.7
Combined ww. (3.5.1989)					
Raw. ww.	12	688	-	5440	-
oil skimmed	2	570	17.7	4640	14.7
oil skimmed +lime added	7.3	-	-	4350	20.0
oil skimmed + lime added	10.1	-	-	4200	22.8

DISCUSSION OF RESULTS

According to the Turkish Water Pollution Control Regulation passed in 1988, the discharge limits into the sewerage system are given on the basis of guidelines for municipalities that want to have such provisions to be: pH 6.5-10.0, suspended solids 500 mg/l, oil and grease 250 mg/l, tar and petroleum oils 50 mg/l, chemical oxygen demand 4000 mg/l, sulfate 1000 mg/l.

Sunflower seed oil effluents investigated in this study are oily, turbid, alkaline and yellowish-brown in color. Most important pollutants in samples are oil and grease, chemical oxygen demand (COD) and biochemical oxygen demand (BOD) which are present in excessive amounts. The wastewater qualities obtained from the pretreatment studies that were carried out show that the pretreatment standards for the discharge into the sewerage system have been met in most of the cases. Chemical treatment alternative without using acid cracking was not so effective as acid cracking plus chemical coagulation methods. Although many chemicals can be successfully used in the de-emulsifying process, sulfuric acid was found to be the most efficient. Acid cracking skimmings containing oily materials may be recovered and returned to the process in order to be used as acid oil or for production of soap. This may reduce the amount of sludge to be formed in the treatment plant.

For acid cracking of refinery process wastewaters, the required acid was 0.4 l/m^3 wastewater. Sulfuric acid was concentrated (98 % pure, BDH). Amount of acid required for combined effluents of refinery and soap production was found to be 2.0 l/m^3 ww. For the adjustment of the pH from 2 to 7, amounts of required lime (90 % pure) were found to be 0.6 kg/m^3 ww for refinery process wastewater and 0.6 kg/m^3 ww for combined wastewaters.

CONCLUSION

In the city of İzmir, sewerage system construction project is underway and the responsible authority (İZSU) declared that it will accept industrial wastewaters into the sewerage system provided that the pretreated water quality will be in compliance with the local discharge limits. Effluent quality after these pretreatment stages was acceptable for discharging into the sewerage system; but insufficient for discharge into the receiving water. Thus, this edible oil refinery may discharge its treated wastewaters into the sewer system, because the proposed pretreatment scheme of acid cracking (acidification and phase separation) followed by lime coagulation, gives out a sufficiently good quality effluent for the sewerage system.

REFERENCES

APHA, AWWA, WPCF (1981). Standard Methods For the Examination of Water and Wastewater, Fifteenth Edition, American Public Health Association, Washington, pp. 460-493.

DIE (1985). Turkish Annual Statistics, Summary of Agriculture Statistics. Ministry of Agriculture Forestry and Rural Affairs, Ankara. In Turkish.

DEU (1986, 1987). Wastewater Analysis Reports, Dokuz Eylül University, Env.Eng.Dept., İzmir. In Turkish.

DPT (1985). Fifth Five Years Development Plan. Publication Number: DPT: 1974, Prime Minister Publisher, Ankara. In Turkish.

Eckenfelder, W.W. (1980). Principles of Water Quality Management. CBI, Inc., Boston, pp. 161-165.

Official Gazette (1988). Turkish State Water Pollution Control Regulation, 4 Sept. 1988, Number: 19919, Ankara. In Turkish.

Tsugita, R.A., Ellis, R.H. (1981). Pretreatment of Industrial Wastes Manual of Practice No. FD-3, Water Pollution Control Federation, Lancaster Press, Lancaster, Pa., U.S.A. pp. 63-72.

TUBİTAK (1984). A Report on Environmental Problems of Edible Vegetable Oil Industry in Turkey, G. Dumlu (Ed)., Publication of the Scientific and Technical Research Council of Turkey, Ankara, pp. 1-10. In Turkish.

Oktay, Ç. (1986). Wastewater Characteristics and Treatment of Sunflower Seed Oil Industry. M.S. Thesis submitted to Dokuz Eylül University, Science Institute, Conducted by F.Şengül, İzmir. In Turkish.

Yıldırım, N., Sancar, S. (1989). Wastewater Characterization and Pretreatment Studies on Sunflower Seed Oil Wastewaters, B.Sc.Thesis, Conducted by F.Şengül and S.K. Çelebi, Dokuz Eylül University, Faculty of Engineering and Architecture, İzmir. In Turkish.

Selected Papers on Pollution Control for the Vegetable Oil Refining Industry

The following materials have no copyright restrictions.

Dearborn Environmental Consulting Services. Evaluation of Physical-Chemical Technologies for Water Reuse, Byproduct Recovery and Wastewater Treatment in the Food Processing Industry, Report No. EPS 3-WP-79-3, Water Pollution Control Directorate, Environment Canada, April, 1979.

Gill, Donald F. et.al. "Treatment of Effluent Waters From Vegetable Oil Refining", EPA 600/2-76-294, Office of Research and Development, U.S. Environmental Protection Agency, December 1976.

Appendix B: Additional Sources

EVALUATION OF PHYSICAL-CHEMICAL TECHNOLOGIES FOR WATER REUSE, BYPRODUCT RECOVERY AND WASTEWATER TREATMENT IN THE FOOD PROCESSING INDUSTRY

by

Dearborn Environmental Consulting Services

for the

Water Pollution Control Directorate
Environmental Protection Service
Environment Canada

Report No. EPS 3-WP-79-3
April 1979

ABSTRACT

Physical-chemical treatment systems can be incorporated into the process line of an industry or may be used to enhance an existing treatment system. The more consistent effluent quality from physical-chemical treatment systems makes them amenable to byproduct recovery or water reuse schemes. While many such systems are more expensive than conventional treatment, the prospect of valuable byproduct recovery makes them more attractive.

The objective of this manual is to provide a comprehensive review of physical-chemical and advanced treatment technologies and their application to the food industry. Such documentation should provide food industry personnel with valuable information on treatment alternatives available to meet their specific needs.

A general section covering the economic considerations is included to augment the design criteria.

Case histories from the majority of the food industry have been included to add operational information.

BEST AVAILABLE COPY

RÉSUMÉ

Il est possible de greffer le traitement physico-chimique au procédé de fabrication d'une industrie donnée ou de l'ajouter à un système de traitement en place pour améliorer ce dernier. On obtient ainsi des effluents de qualité plus uniforme et qui se prêtent mieux à la récupération des sous-produits ou au recyclage de l'eau. Même si dans plusieurs cas, il est plus coûteux que le traitement classique, il offre des possibilités de récupérer des sous-produits précieux, que le rendent plus attrayant.

Le présent guide a pour but de fournir des renseignements complets sur les techniques de traitement physico-chimique et les autres techniques avancées dans ce domaine ainsi que sur leur utilisation dans l'industrie alimentaire. Il constitue pour elle une source précieuse de renseignements sur les méthodes de traitement qui peuvent répondre à ses besoins précis.

Un chapitre général porte sur les considérations économiques et vient ajouter aux critères de conception.

Grâce à certains exemples représentatifs de l'ensemble de l'industrie alimentaire, le guide comporte un aspect plus concret.

BEST AVAILABLE COPY

REVIEW NOTICE

This report has been reviewed by the Water Pollution Control Directorate, Environmental Protection Service, and approved for publication. Approval does not necessarily signify that the contents reflect the views and policies of the Environmental Protection Service. Mention of trade names or commercial products does not constitute recommendation or endorsement for use.

© Minister of Supply and Services Canada 1979

Cat. No. En43-3/79-3

ISBN 0-662-10495-1

BEST AVAILABLE COPY

TABLE OF CONTENTS

		Page
ABSTRACT		i
LIST OF FIGURES		vii
LIST OF TABLES		ix
1	INTRODUCTION	1
1.1	Objective of the Manual	1
1.2	Contents of the Manual	2
2	PHYSICAL, PHYSICAL-CHEMICAL AND ADVANCED TREATMENT TECHNOLOGIES	4
2.1	Physical Treatment Technologies	6
2.1.1	Equalization	6
2.1.2	Screening	6
2.1.3	Gravity Clarification	12
2.1.4	Filtration	12
2.1.5	Centrifugation	15
2.1.6	Flotation	15
2.1.7	Hydrocyclones	19
2.1.8	Evaporation	21
2.2	Physical-Chemical Treatment Technologies	22
2.2.1	Precipitation	22
2.2.2	Chemical Coagulation	22
2.2.3	Chemical Oxidation	24
2.2.4	Wet Oxidation	25
2.2.5	Solvent Extraction	27
2.3	Advanced Treatment Alternatives	27
2.3.1	Carbon Adsorption	27
2.3.2	Ammonia Stripping	28
2.3.3	Ion Exchange	29
2.3.4	Reverse Osmosis	30
2.3.5	Ultrafiltration	32
2.3.6	Electrodialysis	33
2.3.7	Dialysis	34
3	GENERAL IN-PLANT WATER AND WASTE CONSERVATION	37
4	MEAT, POULTRY AND RENDERING	40
4.1	Processes and Was[illegible]	40
4.2	Water and Waste M[illegible]	48
4.2.1	Meat Packing	48
4.2.2	Poultry Processing	50
4.3	Physical Treatment Process Applications	52
4.3.1	Screening	52
4.3.2	Gravity Clarification	53

4.3.3	Flotation	53
4.3.4	Filtration	54
4.3.5	Centrifugation	55
4.3.6	Evaporation	55
4.4	Physical-Chemical Treatment Process Applications	55
4.5	Advanced Treatment Process Applications	56
5	DAIRY PRODUCTS INDUSTRY	58
5.1	Processes and Waste Properties	58
5.2	Water and Waste Management	60
5.3	Physical Treatment Process Applications	64
5.4	Physical-Chemical Treatment Process Applications	64
5.5	Advanced Treatment Process Applications	65
6	FRUIT AND VEGETABLE PROCESSING	67
6.1	Processes and Waste Properties	67
6.2	Water and Waste Management	69
6.2.1	Material Transport	69
6.2.2	Product Washing	70
6.2.3	Peeling	71
6.2.4	Blanching	72
6.2.5	Pickling	73
6.2.6	Water Recirculation Systems	74
6.2.7	Multiple Reuse Systems	74
6.2.8	Plant Cleanup	75
6.2.9	Miscellaneous Methods	75
6.3	Physical Treatment Process Applications	75
6.3.1	Screening	75
6.3.2	Hydrocylones	76
6.3.3	Gravity Clarification	76
6.3.4	Flotation	77
6.3.5	Filtration	77
6.3.6	Centrifugation	78
6.3.7	Evaporation	78
6.4	Physical-Chemical Treatment Process Applications	78
6.5	Advanced Treatment Process Applications	79
7	BEVERAGE INDUSTRY	81
7.1	Processes and Waste Properties	81
7.1.1	Breweries	81
7.1.2	Distilleries	81
7.1.3	Wineries	83
7.1.4	Soft Drink Bottling	83
7.2	Water and Waste Management	83
7.2.1	Breweries	86
7.2.2	Distilleries	86
7.2.3	Wineries	86
7.2.4	Soft Drink Bottling	87
7.3	Physical Treatment Process Applications	87

7.4	Physical-Chemical Treatment Process Applications	88
7.5	Advanced Treatment Process Applications	88
8	EDIBLE OIL PROCESSING	90
8.1	Processes and Waste Properties	90
8.2	Water and Waste Management	92
8.2.1	Crushing Operations	92
8.2.2	Refining Operations	93
8.3	Physical Treatment Process Applications	93
8.3.1	Gravity Clarification	93
8.3.2	Flotation	94
8.3.3	Filtration	94
8.3.4	Soapstock Drying	94
8.4	Physical-Chemical Treatment Process Applications	95
8.5	Advanced Treatment Process Applications	95
9	FISH AND SEAFOOD PROCESSING	97
9.1	Processes and Waste Properties	97
9.2	Water and Waste Management	102
9.2.1	Unloading	104
9.2.2	Ice Separation	104
9.2.3	Transport	104
9.2.4	Thawing	104
9.2.5	Mechanical Process Equipment	105
9.2.6	Byproduct Recovery	105
9.2.7	Plant Cleanup	105
9.3	Physical Treatment Process Applications	105
9.3.1	Screening	106
9.3.2	Gravity Sedimentation	107
9.3.3	Flotation	107
9.3.4	Evaporation	107
9.4	Physical-Chemical Treatment Process Applications	108
9.5	Advanced Treatment Process Applications	108
10	MISCELLANEOUS FOOD PROCESSING INDUSTRIES	109
10.1	Processes and Waste Properties	109
10.2	Water and Waste Management	109
10.2.1	Sugar Beet Processing	109
10.2.2	Egg Grading and Breaking	111
10.2.3	Confectionaries	111
10.2.4	Breakfast Cereals	111
10.2.5	Coffee and Rice Preparation	111
10.2.6	Soy Protein Production	111
10.2.7	Starch Industry	112
10.3	Physical Treatment Process Applications	112
10.3.1	Sugar Beet Processing	112
10.3.2	Baked Goods	112
10.3.3	Egg Grading and Breaking	113
10.3.4	Confectionaries	113

62

10.3.5	Breakfast Cereals	113
10.3.6	Rice Preparation	113
10.3.7	Specialty Food Industry	113
10.3.8	Starch Industry	113
10.4	Physical-Chemical Treatment Process Applications	113
10.4.1	Sugar Beet Processing	113
10.4.2	Baked Goods	114
10.4.3	Egg Grading and Breaking	114
10.4.4	Confectionaries	114
10.4.5	Soybean Protein Production	114
10.4.6	Rice Preparation	114
10.4.7	Specialty Food Industry	114
10.5	Advanced Treatment Process Applications	114
11	WATER MANAGEMENT AND REUSE - SELECTED CASE HISTORIES	116
11.1	Water and Waste Management in the Meat Packing Industry	116
11.2	Water Management and Reuse in the Poultry Industry	118
11.3	Water and Waste Management in the Dairy Industry	123
11.4	Water Management and Reuse in Fruit and Vegetable Processing	125
11.5	Water and Waste Management in the Beverage Industry	128
12	PHYSICAL-CHEMICAL TECHNOLOGIES FOR WASTEWATER TREATMENT AND BYPRODUCT RECOVERY - SELECTED CASE HISTORIES	130
12.1	Screening of Food Processing Effluents	130
12.2	Dissolved Air Flotation of Food Processing Effluents	133
12.3	Electroflotation of Food Processing Effluents	138
12.4	Physical-Chemical Protein Recovery	143
12.5	Whey Utilization	147
13	ECONOMIC CONSIDERATIONS	155
13.1	Capital Costs	156
13.2	Operating Costs	156
13.3	Potential Benefits (Negative Costs)	157
14	FUTURE TRENDS IN FOOD PROCESSING POLLUTION ABATEMENT	158
14.1	Pollution Abatement Technology	158
14.2	Involvement of Regulatory Agencies	163
ACKNOWLEDGEMENTS		166
REFERENCES		167
LIST OF ABBREVIATIONS		169
METRIC CONVERSIONS		172

LIST OF FIGURES

Figure		Page
1	PROCESS EFFLUENT TREATMENT OPTIONS	5
2	HYDRASIEVE SCHEMATIC	8
3	TYPICAL MICROSCREEN UNIT	10
4	THE SWECO CONCENTRATOR	11
5	ROTARY VACUUM FILTER	14
6	SOLID BOWL CENTRIFUGE	16
7	SCHEMATIC OF BASKET CENTRIFUGE	16
8	ALTERNATIVE AIR INJECTION MODES IN AIR FLOTATION	18
9	SCHEMATIC OF A DISSOLVED-AIR FLOTATION UNIT	19
10	DISPERSED AIR FLOTATION UNIT	20
11	SCHEMATIC OF A HYDROCYCLONE	22
12	SCHEMATIC OF ZIMMERMAN WET OXIDATION PROCESS	26
13	DIRECT AND REVERSE OSMOSIS	31
14	REVERSE OSMOSIS MODULE DESIGN	31
15	SCHEMATIC OF ELECTRODIALYSIS APPARATUS	33
16	USEFUL RANGES OF VARIOUS SEPARATION PROCESSES	36
17	FLOWSHEET FOR MEAT PROCESSING FACILITIES	41
18	FLOWSHEET OF A TYPICAL RENDERING OPERATION	42
19	FLOWSHEET FOR POULTRY PROCESSING FACILITIES	46
20	FLOWSHEET FOR DAIRY AND MILK PROCESSING PLANTS	59
21	PROCESS FLOWSHEET FOR PREPARATION OF CANNED AND FROZEN FRUITS AND VEGETABLES	68
22	FLOWSHEET OF THE BREWING PROCESS	82
23	FLOWSHEET OF THE DISTILLING PROCESS	84
24	FLOWSHEET OF SOFT DRINK BOTTLING PROCESS	85

25	FLOWSHEET OF EDIBLE OIL PROCESSING	91
26	FLOWSHEET OF GROUNDFISH FILLETING	98
27	FLOWSHEET FOR CRAB PROCESSING	99
28	FLOWSHEET OF SALMON CANNING PROCESS	100
29	FLOWSHEET OF FISHMEAL PROCESS	103
30	WASTEWATER RENOVATION SYSTEM	122
31	SWECO CSC TREATMENT SYSTEM FOR POULTRY PROCESSING EFFLUENT	132
32	SCHEMATIC OF LECTRO-CLEAR TREATMENT PROCESS	139
33	RENDERING PLANT ELECTROFLOTATION SYSTEM	142
34	ALWATECH PROTEIN RECOVERY SYSTEM	146
35	SCHEMATIC FLOWSHEET OF TWO-STAGE MEMBRANE PROCESS FOR WHEY RECOVERY	150
36	ALTERNATIVE WHEY RECOVERY SCHEMES USING CELLULOSE ION EXCHANGERS	154
37	WATER USE/REUSE/RECYCLE SCHEMES	160

LIST OF TABLES

Table		Page
1	CHARACTERISTICS OF MEAT PROCESSING WASTES	43
2	CHARACTERISTICS OF RENDERING INDUSTRY WASTEWATERS	45
3	CHARACTERISTICS OF POULTRY PROCESSING WASTES	48
4	SUMMARY OF CONVERSION FACTORS RELATING ACTUAL PRODUCT TO MILK EQUIVALENTS	61
5	WATER USAGE IN THE CANADIAN DAIRY PRODUCTS INDUSTRY	61
6	SUMMARY OF RAW WASTE LOADS FROM CANADIAN DAIRY PRODUCTS INDUSTRY	62
7	SUMMARY OF AMERICAN DAIRY AND MILK PROCESSING PLANT EFFLUENT CHARACTERISTICS	62
8	WASTE CHARACTERISTICS FOR SELECTED COMMODITIES IN THE FRUIT AND VEGETABLE INDUSTRY	69
9	EFFLUENT LOADINGS FROM CANADIAN RAPESEED PROCESSING PLANTS	92
10	CHARACTERISTICS OF FISH AND SEAFOOD PROCESSING WASTES	101
11	CHARACTERISTICS OF FISHMEAL PROCESSING WASTES	102
12	SOURCES AND CHARACTERISTICS OF WASTEWATERS FROM MISCELLANEOUS FOOD PROCESSING INDUSTRIES	110

1 INTRODUCTION

Physical-chemical waste treatment processes can often provide a more consistent effluent quality than biological treatment systems. This consistency is of major importance in water reuse and recycle. The potential recovery of valuable byproducts from process effluents can provide an economic return to alleviate operational costs of the treatment facility. Physical-chemical process units can be located advantageously near the process area to improve operational control.

No comprehensive document previously existed describing the physical, physical-chemical and advanced treatment technologies available and their possible applications in the food processing industry. This manual details existing and potential uses of these technologies for water reuse, byproduct recovery and wastewater treatment in the food processing industry.

1.1 Objective of the Manual

The overall objective of the manual is to provide a comprehensive review of physical, physical-chemical and advanced treatment technologies applicable to the waste treatment problems of the Canadian food processing industry. The primary aim is to familiarize food industry management with the alternatives available, the areas in which they have been or could be applied and the economic benefits which could be derived from these systems. Specifically, the manual is intended to:

- provide the food processing industry with a guide to the various physical, physical-chemical and advanced treatment technologies, and the basic principles involved in each unit process and operation,
- define areas within the food industry where water and wastewater conservation methods could be applied to improve the economics of pollution abatement,
- review the advances in the area of food industry byproduct recovery which can simultaneously reduce effluent strength and produce a marketable commodity to alleviate the financial burden of the effluent treatment system,
- document existing and potential applications of physical, physical-chemical and advanced treatment technologies in the food industry, and
- survey a range of actual pilot and full-scale installations of these technologies to define operating problems and process efficiencies.

1.2 Contents of the Manual

The food processing industry, for the purposes of this manual, is divided into the following subcategories:

1) meat, poultry and rendering
2) dairy products industry
3) fruit and vegetable processing
4) beverage industry
5) edible oil processing
6) fish and seafood processin,
7) miscellaneous food processing industries.

The application of physical, physical-chemical and advanced technologies for water reuse, byproduct recovery and wastewater treatment in the food processing industry are reviewed.

Section 2 of this volume deals intensively with the various technologies, providing basic design considerations and describing the factors to be evaluated in assessing the alternative processes.

In Section 3, some of the general in-plant water and waste conservation measures, which are applicable to all subcategories of the food processing industry, are reviewed.

Section 4 through 10 describe the applications of physical, physical-chemical and advanced technologies to the seven subcategories of the food processing industry. Background information on the basic processes and resulting wastewater characteristics is provided. In addition, considerable attention is given to water and wastewater management programs which can be effectively used in that industry sector. Each industry discussion is intended to be self-sufficient.

As part of the investigative program, examples of some of the technologies described were visited. The results of these site visits are described in Sections 11 and 12. The economic considerations involved in the application of physical, physical-chemical and advanced treatment technologies are reviewed in Section 13.

Most of the information presented in the manual deals with technologies which have been assessed at least in pilot-scale applications. In addition, Section 14 describes some of the possible future areas of application and the future trends in pollution abatement technology in the food processing industry.

A second volume containing background information on this manual was also prepared during this study. The second volume is a literature review complete with an extensive list of reference material (Dearborn, 1978).

2 PHYSICAL, PHYSICAL-CHEMICAL AND ADVANCED TREATMENT TECHNOLOGIES

As food industry wastes are readily biodegradable, biological treatment generally represents the most economic solution, particularly if effluent quality must meet the rigid standards required for direct discharge to the receiving waters. Few physical-chemical systems can economically provide the degree of treatment required in these cases. Physical and physical-chemical systems are, however, ideally suited to provide pretreatment of food processing effluents prior to discharge to a municipal sewer system. Further, pretreatment prior to a biological system can improve treatment efficiency, reduce plant size and result in significant savings in capital and operating costs. Physical, physical-chemical and advanced treatment processes are also applied to upgrade a biologically treated effluent to allow direct reuse in the process.

The most important application of these treatment technologies is the recovery of valuable byproducts from the process effluent streams. It is in this area that the advantages of such systems are realized. Pretreatment requirements can often be met by the removal of potentially valuable organic and inorganic matter from the process effluent. Marketing of the byproduct material can often offset the cost of the treatment system. In many cases, a high return-on-investment can be attained. In Figure 1, the various options integrating biological and physical-chemical systems for process effluent treatment are illustrated.

Physical-chemical treatment concepts are not new; however, advances in equipment and new applications are being made constantly. Some of these treatment technologies have been applied within the food industry for years. The recovery of solid material which can be converted simply to a marketable commodity is prevalent in many categories of the food industry. Screens, clarifiers and air flotation units are utilized to recover grease and solids from meat, poultry and fish wastes for subsequent rendering or meal production. Solids from fruit and vegetable wastes are recovered as animal feed products. In many cases, these systems are considered to be a part of the production process and not a waste treatment operation.

The purpose of this manual is to review existing and define potential future applications of these technologies in the food processing industry. To obtain maximum benefits from the manual, it is necessary to provide some background information on the processes involved and the areas of possible application. This section of the manual provides a general description of the basic physical, physical-chemical and advanced

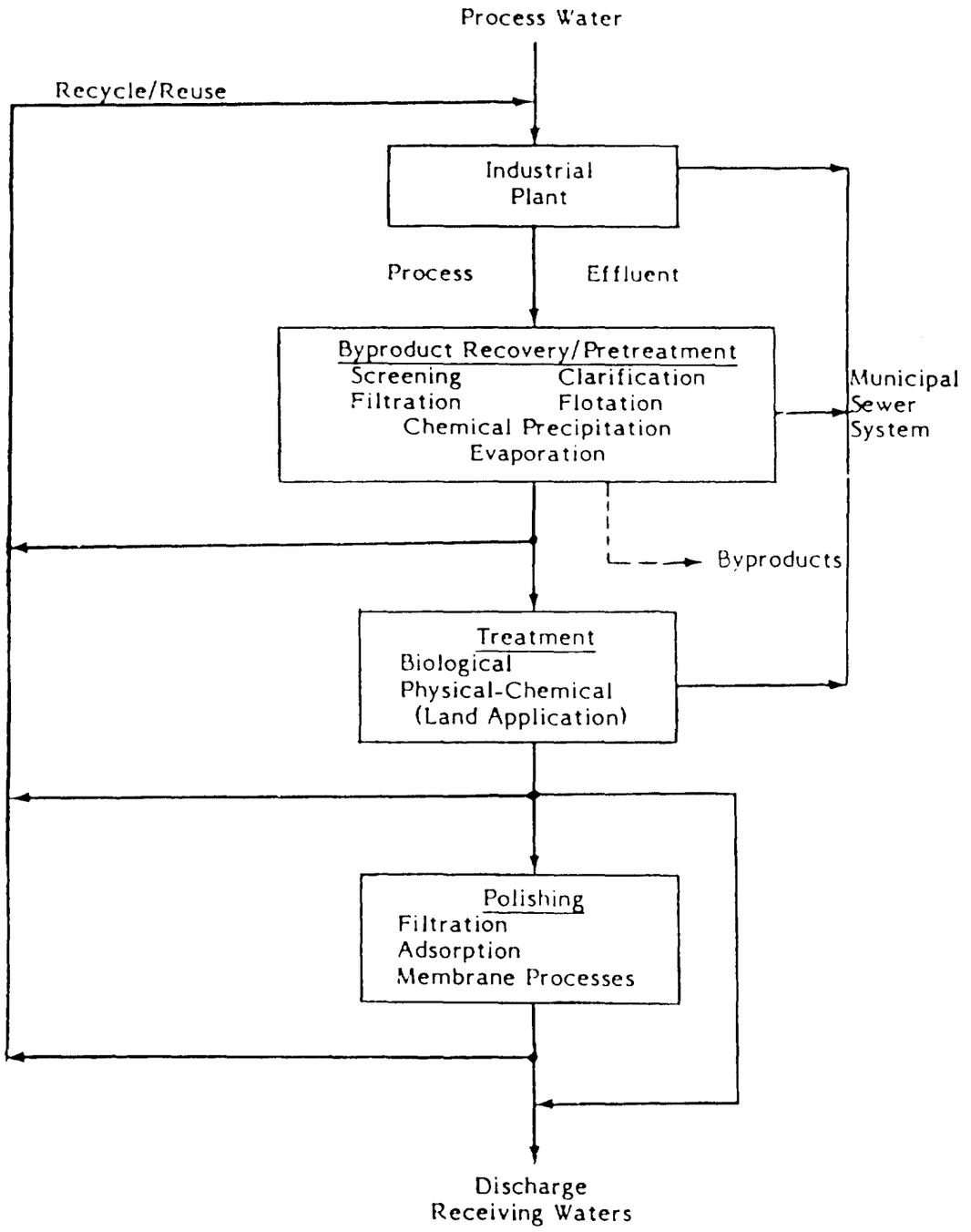

FIGURE I PROCESS EFFLUENT TREATMENT OPTIONS

technologies which are included in the subsequent discussions of water conservation, recycle/reuse and treatment.

There are innumerable treatment alternatives and combinations of unit processes possible. Processes applicable in specific cases depend on such factors as wastewater characteristics, plant location and relative economics. Although basic design considerations are discussed, actual design parameters for the process units are site-specific. It is not the intention of this discussion to attempt definition of generally applicable design criteria, but rather to provide the food industry with some knowledge of the alternative processes available, define the factors to be considered in evaluating the alternatives and give an insight into systems which might be applicable to their particular problem. The actual design specifications for an individual installation have to be determined based on evaluations of the conditions prevailing at the actual plant.

2.1 Physical Treatment Technologies

2.1.1 Equalization. Although not a treatment process per se, equalization can have a significant impact on subsequent treatment units and is therefore included in this discussion. As physical-chemical treatment processes are often more susceptible to hydraulic load variations than biological systems due to the relatively short retention times involved, flow equalization should be seriously considered, particularly in situations where significant variations in effluent flow rates are prevalent.

Equalization facilities consist of a simple storage basin and pumping equipment to feed the process effluent to subsequent unit processes at a constant rate. Mixing equipment in the basin can improve concentration equalization to dampen variations in process effluent strength. The elimination of peak hydraulic, organic and solid loadings resulting from equalization can often result in reduced size requirements for the treatment units and improved process efficiency.

2.1.2 Screening. Most food industry process effluents contain considerable amounts of solid waste matter. Removal and recovery of this material prior to further treatment is a common practice. Screens are widely applied to remove solids from the process effluent streams.

There are several screen designs which are applicable to food industry wastes. These can be generalized as:

- static or inclined screens,
- rotating cylindrical screens,
- vibrating screens.

The screening material may be parallel rods, bars or wires, grating, wire mesh or perforated plates. Screens are designated as coarse (>0.5 cm openings) or fine (<0.5 cm openings) according to the size of openings. For fine screens, mesh size, which defines the number of openings per linear inch, is often used to characterize the screening material.

Screening is a primary step in wastewater treatment, designed to remove large solids. As a result, there is only a limited reduction in biochemical oxygen demand (BOD). Initial screening reduces the suspended solids loadings on subsequent treatment equipment and reduces the chance of clogged pumps and piping. Screens have small space requirements and thus can be conveniently located near the processing area. Rapid separation of solids from the liquid phase can significantly reduce the degree of solubilization of waste organics. The separated solids can often be readily converted to a valuable byproduct.

2.1.2.1 Static or inclined screens. Static screens or inclined screens are typified by such units as the Hydrasieve (C-E Bauer,Division of Combustion Engineering Inc.), the DSM Screen (Dorr-Oliver Inc.) and the Hydroscreen (Hydrocyclonics Corp.). An illustration of a Hydrasieve is given in Figure 2.

Inclined screens can be constructed of either round or wedge wires. New developments include the use of synthetics such as polyester, nylon or polyethylene. Synthetic cloth media are manufactured in sizes down to 5 micron openings and have good resistance to blinding.

These units operate by gravity, functioning as inclined drainage boards. Screen openings run transverse to the direction of flow. Influent wastewater overflows a headbox onto the upper portion of the screen. Most of the water is removed on the upper slope of the screen. The screened solids accumulate on the lower portion of the screen because it is flatter and additional drainage occurs. On the final slope of the screen, simple drainage occurs and solids are displaced from the screen by oncoming solids.

Static screens have been successfully applied to recover solid material from fruit and vegetable processing wastewaters, seafood processing effluents, meat and poultry operations and brewery, winery and distillery waste streams. In many cases, the recovered solids can be converted to a valuable byproduct or used directly as an animal feed.

2.1.2.2 Rotating screens. Rotating screens may be mounted vertically or horizontally. The most common configuration is the horizontal mounting. Horizontal rotating screens

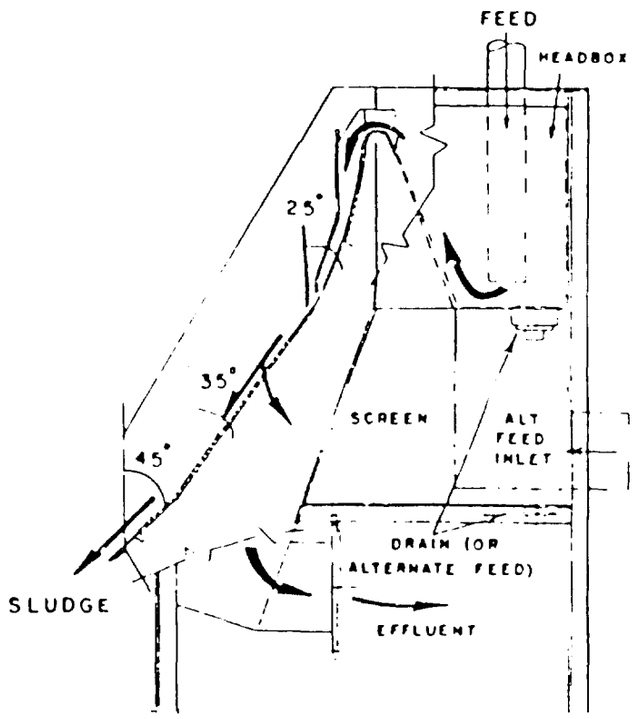

FIGURE 2 HYDRASIEVE SCHEMATIC (Courtesy C-E Bauer)

may collect solids on either the inside or outside surface of the rotating drum. The simplest rotating screens consist of a perforated drum rotating on a slightly inclined axis. Wastewater enters the screen at the upper end and is discharged through the screen. Solids are discharged at the lower end of the screen. These units are common in the fish processing industry for recovery of offal from flume water.

More sophisticated units, such as the Microstrainer (Cochrane Division, Crane Co.) shown in Figure 3, rotate semi-submerged in a basin. Solids are collected in the inside surface and backwashed by spray nozzles into a collection hopper. Screened water passes through the screen from inside to outside and is discharged. Due to the small mesh sizes available, units such as the Microstrainer have been successfully used for polishing of biologically treated wastewaters. On rotary screens which collect solids on the outside surface, this material is usually removed by a scraper blade. Wastewater flow is from the outside of the screen to the inside. These screens have been effectively applied to remove and recover grease from poultry processing effluents and from tripe bleaching operations.

The Sweco centrifugal concentrator is an example of a vertically-mounted rotating screen. In this unit, wastewater is directed against the inside of a rotating cylindrical screen cage. The rotational speed increases the hydraulic capacity and, together with the solid impingement angle, permits separation of solids finer than the screen openings. Separated solids, in slurry form, are removed from the bottom of the unit while effluent is taken off at the periphery. Solid accumulation on the screen is prevented by spray cleaning systems using directed water jets. The Sweco centrifugal concentrator is shown in Figure 4. These units have been successfully applied for pretreatment and solids recovery in poultry, fish and vegetable processing operations. The high rotational speed allows the use of screen sizes as fine as 325-mesh.

In comparison with static screens, rotating units typically require smaller space, as hydraulic loading can be increased, but require maintenance.

2.1.2.3 Vibrating screens. Vibrating screens use a motor-driven perforated screen to remove solids present in the wastewater. The screen housing is supported on springs which are caused to vibrate by an eccentric drive. The screen surface may be flat or slightly funnel shaped. The vibrating motion causes suspended particles in the solution to migrate to the centre or the periphery of the screen where they are removed. The

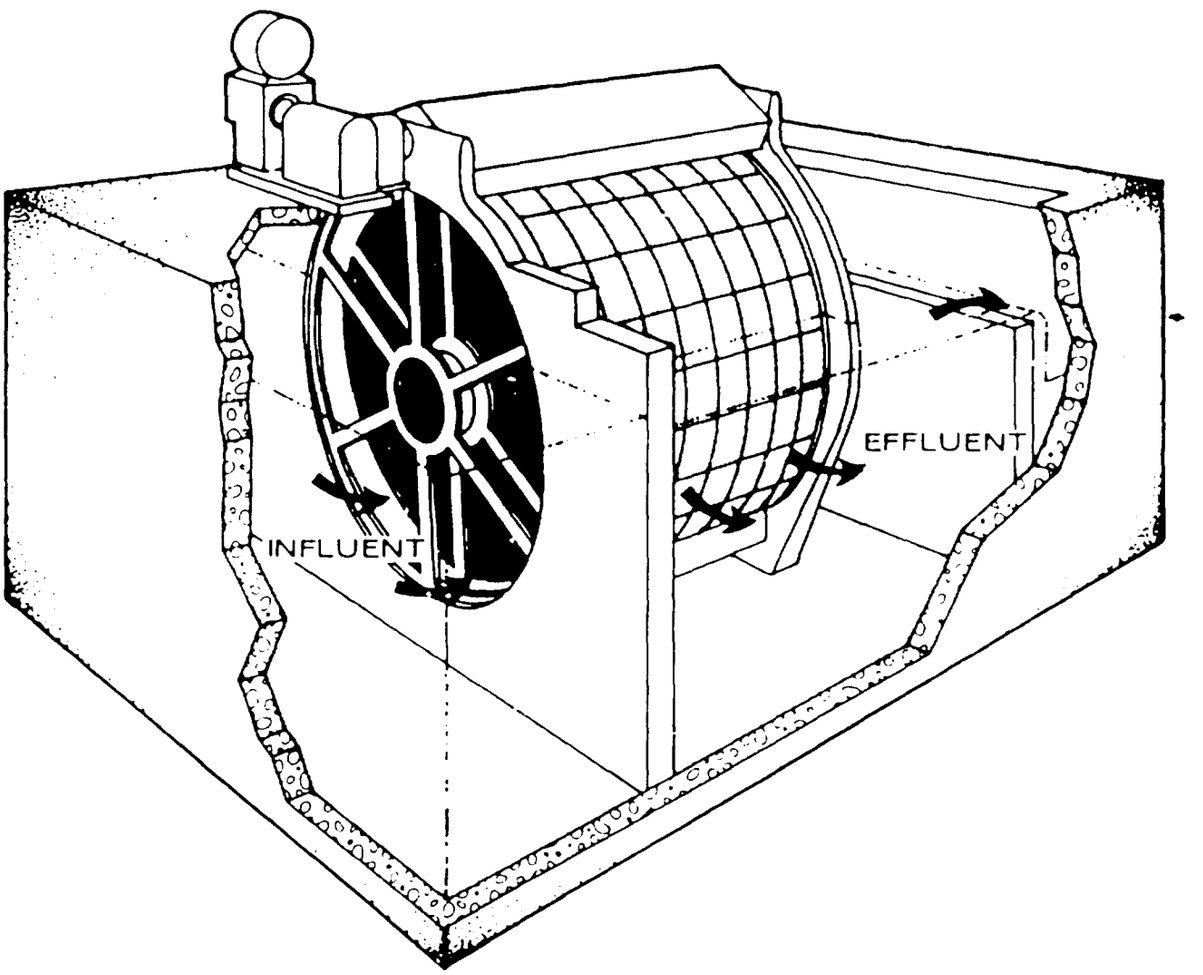

FIGURE 3 TYPICAL MICROSCREEN UNIT (Courtesy of Cochrane Division, Crane Company)

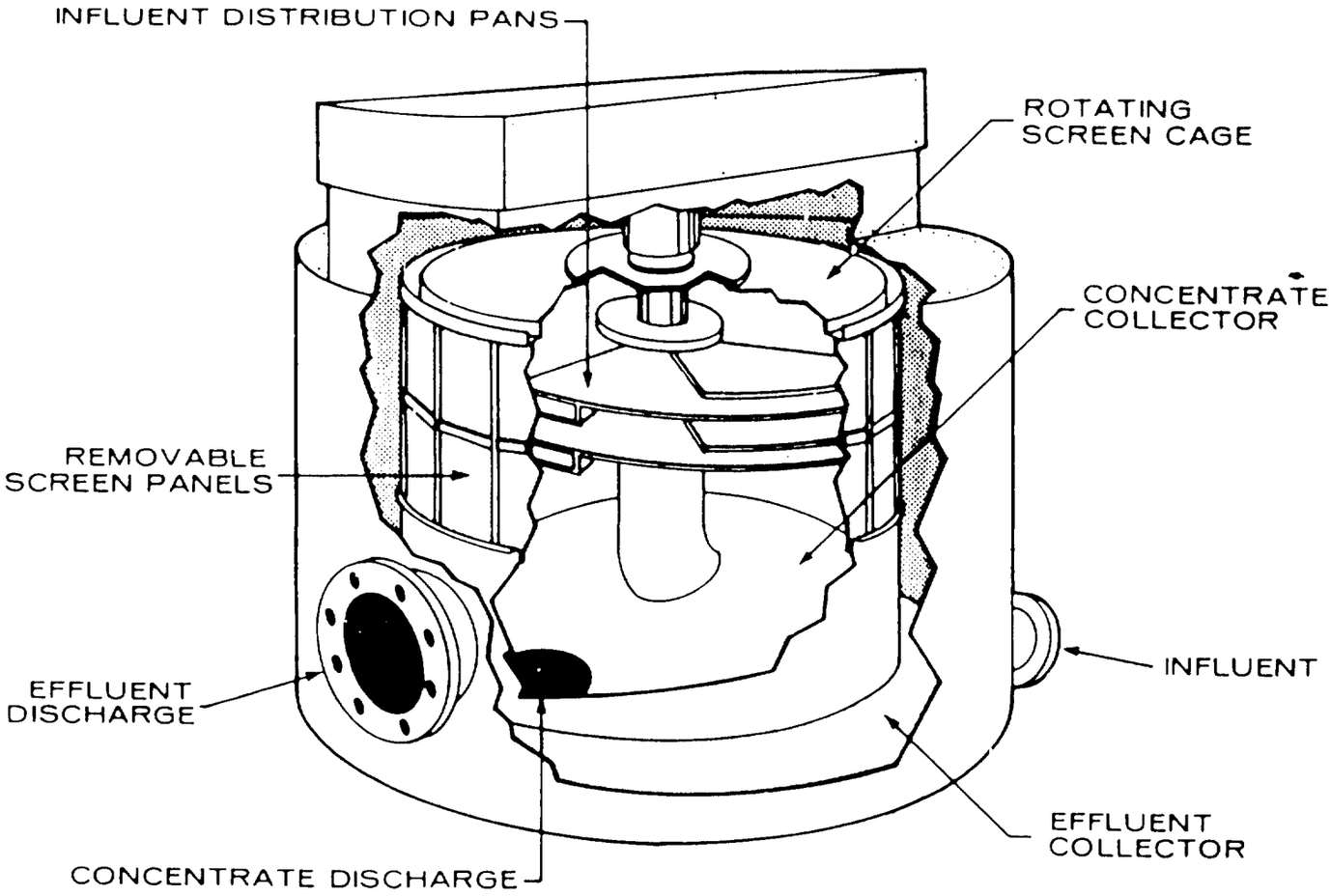

FIGURE 4 THE SWECO CONCENTRATOR (Courtesy of SWECO, Inc.)

screen travel of 0.08 to 1.27 cm in a circular, straight or three dimensional path. Screens typical of this category are the Kason Vibro-screen Separator or the Sweco Vibro-Energy Separator.

Vibrating screens have been commonly used for the treatment of meat and poultry, and fruit and vegetable wastewater. However, they typically produce lower solids removals than static screen systems. They are also more sensitive to flow variations and the solids content of the wastewater. With greasy wastes, special attention must be given to the prevention of screen blinding.

2.1.3 Gravity Clarification. Gravity clarification depends on differences in specific gravities between suspended matter and the aqueous media for separation. Gravity clarification can produce separation due to settling or floating, as in grease traps, depending on the relative densities of the materials.

The most simple gravity clarification system is the catch basin, very common in the meat and poultry industry. Many older catch basins are not equipped with mechanical grease or solids removal and must be cleaned manually.

Gravity clarifiers can be either circular or rectangular. They are normally equipped with both scum scraping mechanisms for removal of floating materials such as grease and sludge scrapers for collection of settled solids. The principle design specifications for clarifiers or settling tanks is the hydraulic overflow rate or surface loading. For a specific installation, the overflow rate will depend on the settling rate of the particulate matter.

A recent development in the area of gravity clarification is the tube or inclined plate separator. By installation of tubes or plates in the settling tank, solids removal can be accomplished at significantly higher hydraulic loadings than in conventional systems due to the reduction in particle settling distance required for removal. However, problems can be encountered due to accumulation of solids on the tubes or plates, which reduces efficiency.

Gravity clarification has been successfully used in fruit and vegetable applications, sugar beet processing and meat and poultry processing for removal of suspended matter not amenable to screening. The recovered solids can often be utilized directly, or after processing, as a byproduct of the food production process.

2.1.4 Filtration. Filtration equipment is designed to either remove low concentrations of residual suspended matter from a waste stream or increase the solids content of a concentrated sludge stream. Few filtering systems are directly applicable for treatment

at the suspended solids concentration experienced in a total effluent stream from a food processing facility. There are, however, instances in the food industry where filtration of a specific wastewater stream would be feasible. Several filtration modes are available depending on the specific application.

2.1.4.1 Granular media filtration. Granular media filtration involves the passage of the aqueous stream through a bed of granular material such as sand or a mixture of sand and anthracite. This process is normally applied to streams containing low concentrations of suspended matter as on-line operating time is significantly shortened by high solids loadings.

Granular media filters are available as gravity flow or pressure flow systems and upflow or downflow modes are possible. Upflow filtration typically has a greater capacity for retaining filtered solids.

Granular media filters are typically applied to polish effluent streams from biological or chemical treatment process prior to discharge or reuse. However, any process effluent stream containing relatively low suspended solids concentrations could be treated by this process.

2.1.4.2 Vacuum filtration. Vacuum filtration is conventionally used to dewater concentrated sludge streams. The vacuum filter is normally a rotating drum, over which is stretched the filter media which can be cloth, mesh or wire coils. The drum is partially immersed in a feed tank and vacuum applied to the interior of the drum. The sludge cake accumulates on the filter media and is removed by release of vacuum, application of pressure or mechanical means as the drum rotates. Filtrate is collected and discharged. A rotary vacuum filter is shown in Figure 5.

Vacuum filtration equipment can also be operated in a precoat mode. A layer of porous filter media, commonly diatomaceous earth, is applied to the filter to improve solids capture and sludge dewatering properties.

Vacuum filtration has been applied in numerous instances, both in the manufacturing process and in waste treatment, within the food industry. Applications include dewatering of lime mud in sugar beet processing and dewatering of pulp as a feed in the fruit and vegetable industry, particularly in potato processing. Vacuum filters are commonly applied to dewater sludges recovered from other treatment units such as clarifiers or flotation cells.

2.1.4.3 Other filtration devices. Pressure filters, such as the plate-and-frame filter press, can be utilized in sludge dewatering applications similar to the vacuum filter. Belt filters are also receiving a good deal of attention due to their minimal operating costs.

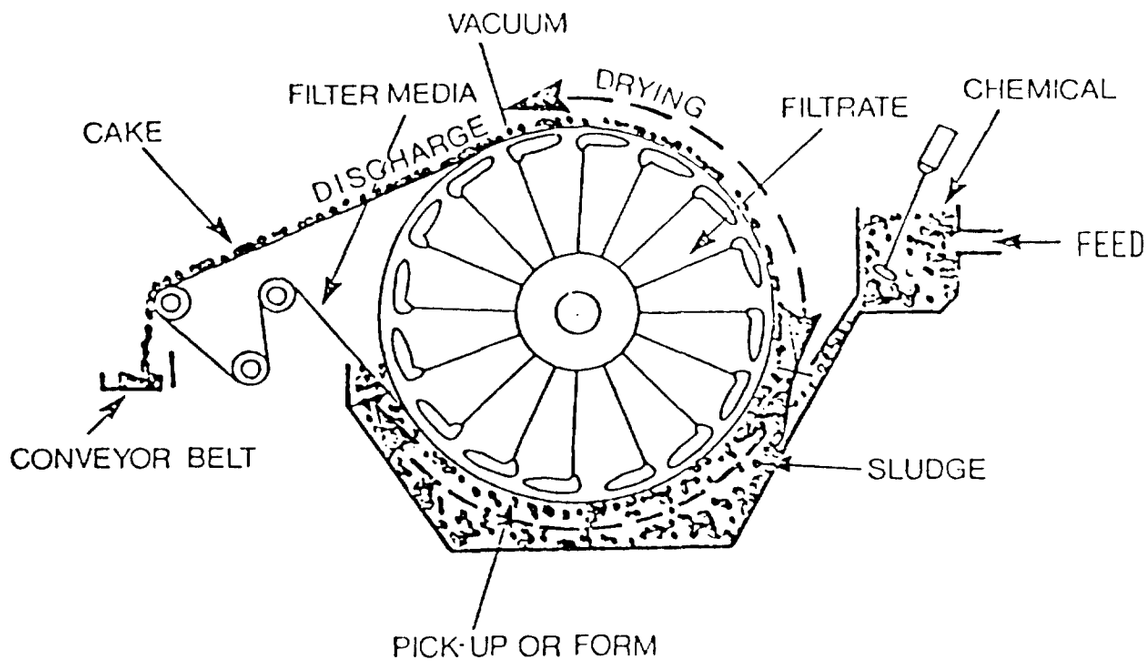

FIGURE 5 ROTARY VACUUM FILTER

Pre-coat pressure filters, using diatomaceous earth, can be used to remove low levels of grease and solids from aqueous streams to allow reuse in the processing area. Such a system has been evaluated for the treatment of poultry chiller water to allow direct reuse as giblet flume water.

In-line cartridge-type filters can be used to remove residual suspended matter from process water or selected effluent streams. The United States Department of Agriculture (U.S. DA) has developed a modification of the cartridge-type filter, the uniflow filter. This unit consists of a long cloth tube in an open tank. Solids collect on the inside surface and can be removed, after thickening, from the conical tank bottom. The filtrate is collected after passing outward through the filter media. The unit has been successfully demonstrated on poultry chiller wastes.

Coalescing filters are designed to agglomerate dispersed oil droplets into larger size droplets which can be readily separated by gravity flotation. There have been no applications of these systems to food processing wastes although they might be applied for the treatment of edible oil refinery wastewaters.

2.1.5 Centrifugation. There are numerous centrifuge designs available but the most common units in wastewater treatment applications are the solid bowl, shown in Figure 6, and basket centrifuge, shown in Figure 7. As with vacuum or pressure filtration, centrifugation is commonly applied to concentrate a sludge stream or to separate oil from an aqueous phase. In centrifugation, solids and liquids are separated due to differences in specific gravity. The rate of separation is increased over that attainable by simple gravity by the application of centrifugal forces. Basket centrifuges operate on a semi-batch basis whereas solid bowl or scroll-type centrifuges are continuous. Generally, operating and maintenance costs are high due to the high rotational speed of the machines. In many cases, chemical conditioning of the feed stream is necessary to improve recovery. However, many food processors, particularly in fish meal and rendering operations, are familiar with the operational and maintenance requirements of high speed centrifuges as they are commonly used in the process.

Three-phase centrifugal separators developed for the dairy industry are also available. This equipment separates the feed stream into an oil phase, an aqueous phase and a solid phase.

2.1.6 Flotation. Flotation, like sedimentation, involves the separation of suspended matter from an aqueous phase due to specific gravity differences. However, in flotation, the suspended matter is induced to float to the surface by the addition of gaseous bubbles which adhere to the particulates to create buoyancy. Floated sludge accumulates on the surface of the unit and is collected and removed by continuous skimming. Heavy solids are normally collected and removed from the tank bottom. Differences in flotation systems are basically a result of the method used to introduce the gas bubbles to the system.

Flotation has several advantages over sedimentation. Floated solids concentrations are normally higher than comparable settled sludge concentrations. Non-settleable solids can be removed in the process. Shorter retention times can normally be used resulting in smaller units and less space requirements. It is ideally suited to the removal of greases and oils. However, emulsified oils cannot normally be removed without chemical treatment. Flotation usually involves higher operating and maintenance costs. Effluent quality is normally inferior to that attainable by sedimentation.

2.1.6.1 Dissolved air (pressure) flotation. In dissolved air flotation, a portion of the liquid stream is saturated with air at high pressure, usually 400 kN/m^2. When the pressure is reduced to atmospheric in the flotation tank, the excess air present in the stream is

released in the form of bubbles which adhere to the suspended matter and cause it to float. Average bubble size ranges from 70 to 90 microns. Dissolved air flotation units can operate by complete pressurization of the waste stream, or, more commonly, pressurization of a portion of either the raw or treated waste. Flow sheets for the three alternative air injection modes are shown in Figure 8. Selection of operating mode depends on site-specific evaluations of such factors as unit size, capital cost, operating costs and energy requirements. Total flow pressurization systems are common in the fish processing industry. Recycle pressurization systems are more common in meat and poultry processing operations.

A schematic of a dissolved air flotation system is shown in Figure 9.

2.1.6.2 **Vacuum flotation.** Similar to dissolved air pressure flotation, the source of gas bubbles in vacuum flotation is the air dissolved in the liquid stream. However, in vacuum flotation, a partial vacuum is applied to the waste stream and the dissolved gases present in the waste at atmospheric pressure are caused to precipitate in the form of fine bubbles.

In vacuum flotation, turbulence in the flotation unit is minimized compared to pressure flotation and similar bubble sizes are attained. However, the process is limited by the differential presssure which can be attained which determines the number of bubbles produced. Vacuum flotation is seldom applied in full-scale systems due to problems of maintaining a partial vacuum over the flotation tank.

2.1.6.3 **Dispersed air flotation.** In dispersed air flotation, bubbles are generated by introducing atmospheric air to the aqueous phase through a revolving impeller or porous diffuser. A disperser or turbine is usually included to break the gas stream into smaller bubbles which are more effective for flotation. Despite methods to reduce bubble sizes, gas bubbles in dispersed air flotation units are larger than in dissolved air flotation units, on the order of 1 mm in diameter. The efficiency of dispersed air flotation is also reduced by the increased turbulence in the flotation cell. A typical dispersed air flotation unit is shown in Figure 10.

2.1.6.4 **Electroflotation.** In the electroflotation process, gas bubbles are produced by the electrolytic decomposition of water to hydrogen and oxygen. By passage of an electric current through the aqueous waste, extremely small gas bubbles are produced at the electrodes which float the suspended matter to the tank surface for removal.

Electroflotation has several advantages over conventional flotation systems. Turbulence in the flotation cell is minimized and gas bubbles are extremely small. The production of oxygen in the system can result in some oxidation of contaminants. The

(i) Recycle Pressurization

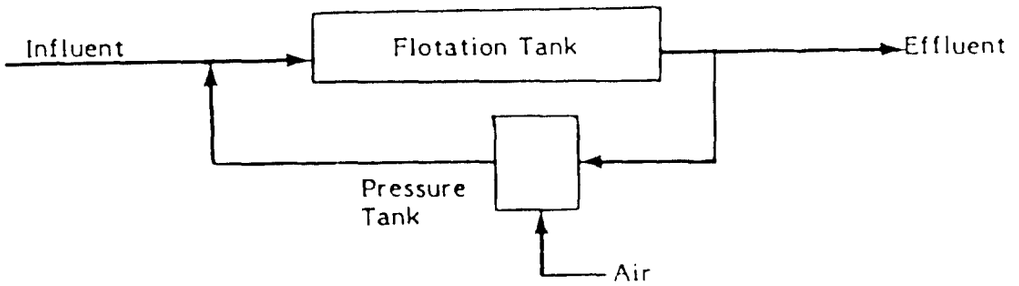

(ii) Total Influent Pressurization

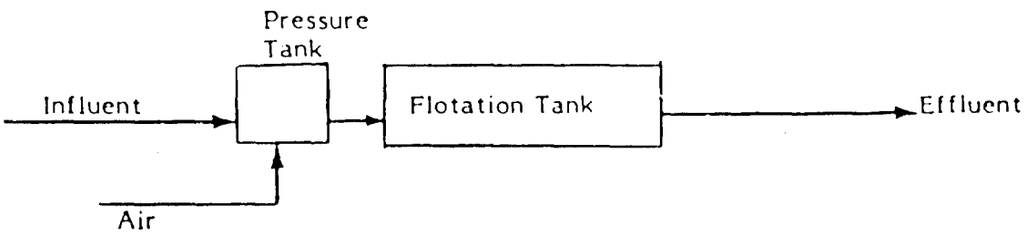

(iii) Partial Influent Pressurization

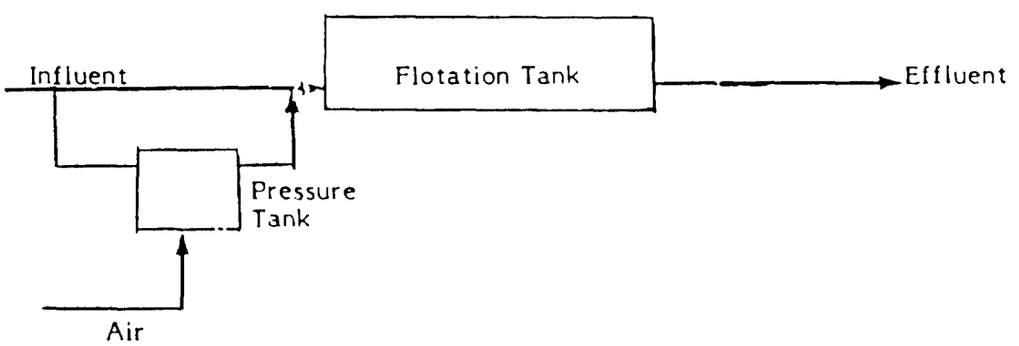

FIGURE 8 ALTERNATIVE AIR INJECTION MODES IN AIR FLOTATION

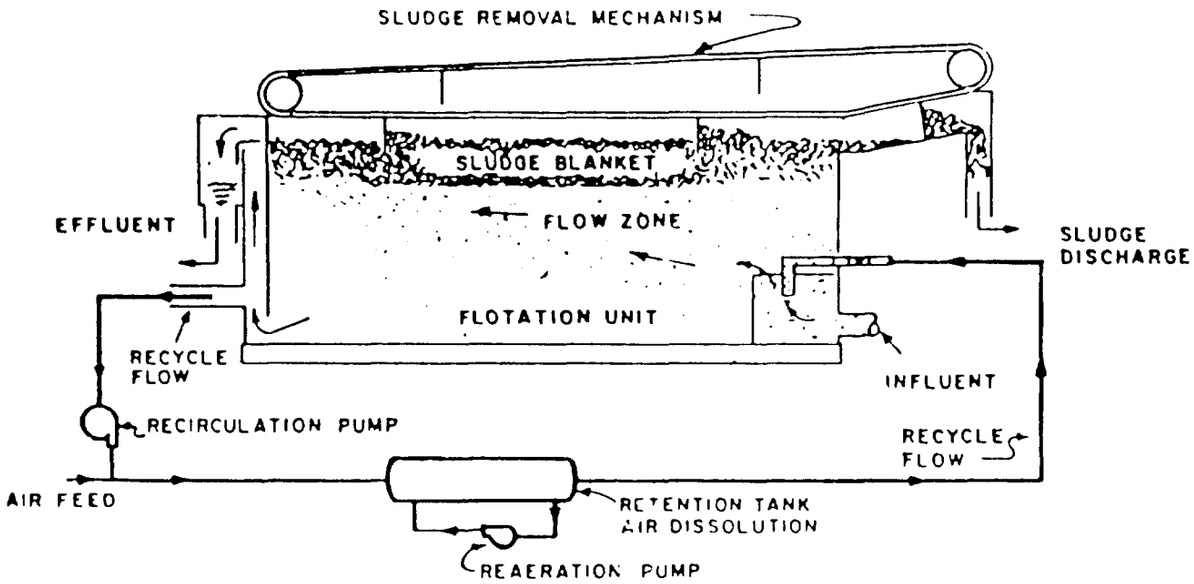

FIGURE 9 SCHEMATIC OF A DISSOLVED-AIR FLOTATION UNIT
(Recycle Pressurization Mode, Courtesy of Komline-Sanderson)

application of electric current can result in flocculation of suspended matter due to neutralization of repulsive surface charges. Sacrificial electrodes of iron or aluminum can be used, designed to dissolve at a controlled rate and add metal ions to the media to improve the coagulation process. Further, in salt or brine solutions, chlorine can be produced by the electrolysis, resulting in further oxidation and disinfection of the wastewater stream. The process is, however, energy intensive.

Electroflotation has been applied full-scale in several food industry installations including meat packing and rendering operations.

2.1.7 Hydrocyclones. Hydrocyclones are mechanical separators which remove suspended matter by centrifugal forces generated by the tangential velocity associated with the inlet water stream. One large cyclone or a number of small cyclones in parallel or series may be used. Units in parallel provide increased volumetric capacity while units in series provide increased removal efficiency.

In the hydrocyclone, the circular motion of the wastewater stream results from the inlet design and energy associated with the inlet stream. Feed enters the cyclone tangentially to the central axis. During operation, particulate matter spirals downward and inward. As separation takes place, lighter particles transfer to an upward spiraling column which discharges at the top of the cyclone while heavier particles are forced down the wall and discharged, as a slurry, at the underflow. Cyclones thus produce a separation of particulate matter into light and heavy fractions.

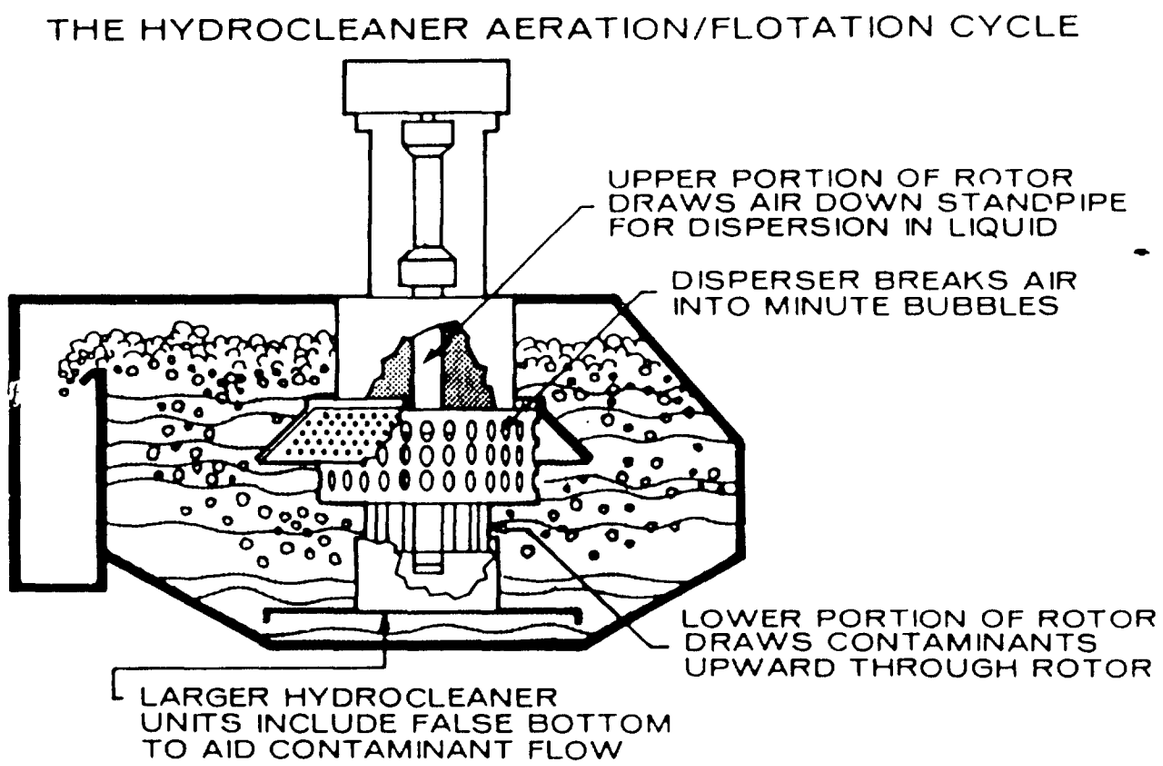

FIGURE 10 DISPERSED AIR FLOTATION UNIT

The absence of moving parts makes hydrocyclone operation simple and highly reliable. Size, and therefore cost, of units increases proportionally to the required efficiency. The process is most suited to the removal of coarse particulate matter as separation efficiency depends on particle density and diameter. Colloidal and finely-divided suspended matter are not readily removed. In addition, the underflow stream is normally relatively dilute.

Hydrocyclones are most applicable to the removal of grit and soil washed from fruit and vegetables and stems and seeds resulting from fruit and vegetable processing. They have also been successfully applied for the removal of starch from potato processing wastes. A schematic illustration of a hydrocyclone is given in Figure 11.

2.1.8 Evaporation. Evaporation is a unit operation in which components of a solution or slurry are separated by vapourization and condensation. The liquid stream is brought to its boiling point, usually by means of low pressure steam. Water and other volatile components are driven off, leaving a concentrated residual solid or liquid.

Evaporation is an energy-intensive process. To be economically feasible, a valuable byproduct must be recovered in the concentrated stream. Therefore, evaporation is seldom used for waste treatment, but is normally applied in a byproduct recovery facility associated with an industrial process. In this regard, evaporation has been used to recover condensed fish solubles from stickwater in fish meal production and distiller's dried solubles from stillage in the distillery industry.

Efficiency of operation can be improved in multiple-effect evaporators. In multiple-effect evaporators, the vapour from one effect is used as the heating medium for another effect boiling at a lower pressure. Energy requirements in these systems are reduced. As energy costs increase, multiple-effect evaporators become more economical. A four-effect Carver-Greenfield system is used to concentrate waste activated sludge from a brewery. The sludge is to be marketed as a feed supplement. A falling film six-effect evaporator is being used in a Wisconsin dairy to concentrate whey. The effect of multiple stage evaporators on steam requirements is evident from the following data:

Number of stages	kg Steam Required per kg Water Removed
3	0.30
4	0.19
5	0.16
6	0.135
7	0.12

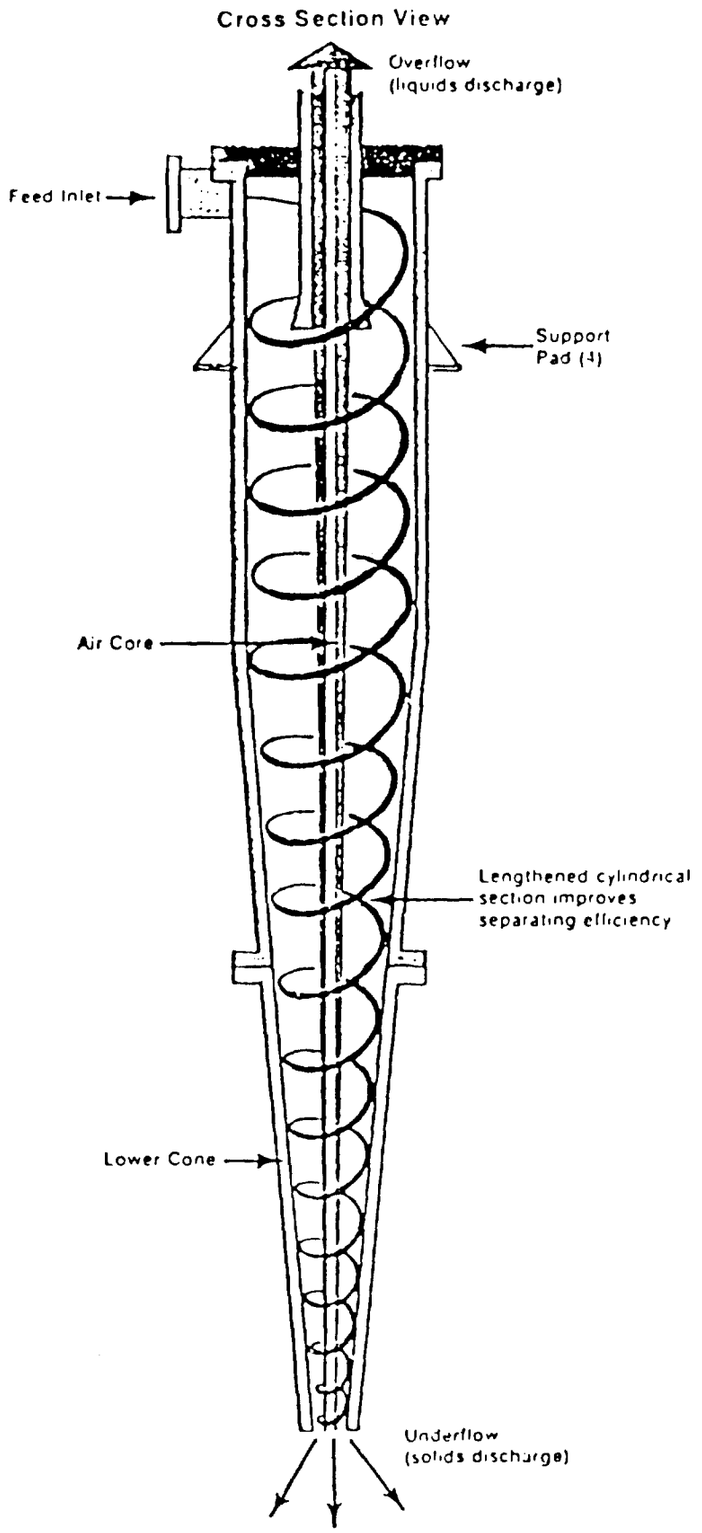

FIGURE 11 SCHEMATIC OF A HYDROCYCLONE (Courtesy C-E Bauer)

2.2 Physical-Chemical Treatment Technologies

2.2.1 Precipitation. Chemical precipitation, as applied in the treatment of liquid effluents, involves the conversion of a soluble contaminant to an insoluble form by the addition of a chemical to the aqueous media. The precipitation process may be the result of a pH change which renders the component insoluble or a chemical reaction which produces an insoluble compound. The most common example of a wastewater precipitation application is the removal of soluble phosphorus compounds from wastewaters by the addition of multi-valent metal salts such as aluminum, iron and calcium. The metal ions react with phosphorus to produce insoluble metal phosphates which can be readily removed from the effluent stream. Chemical precipitation can also result in the removal of colloidal material. Fine particulate matter can be entrained within the floc formed by the chemical reaction and removed by settling.

Precipitation can be applied to recover soluble components of waste streams as byproducts. Lignosulphonates have been extensively studied as a precipitant of proteins in meat and poultry packing effluents. In the Steffen process of the sugar beet industry, calcium is used to precipitate and recover residual amounts of sugar as calcium sucrate from molasses.

Subsequent to the chemical precipitation, physical treatment methods such as clarification, flotation, filtration and screening can be used to separate the solid matter from the liquid stream.

2.2.2 Chemical Coagulation. Coagulation is a process often associated with precipitation, although the principles are different. In chemical coagulation, insoluble colloidal particles are agglomerated by the action of a chemical additive to produce flocculant material which can be removed by sedimentation or flotation. Effective removal of solids resulting from precipitation reactions requires coagulation to increase particle sizes. Some coagulation can occur without chemical addition by natural particle contact and agglomeration. Chemical aids normally increase the rate of agglomeration.

To bring about agglomeration, the repulsive surface charges on the colloidal particles, which reduce or prevent natural particle growth, must be neutralized. This can be accomplished by the addition of charged ions which reduce the effect of the charge on the surface of the colloid. Multi-valent metals ions are commonly used. Alternately, long-chain charged organic molecules (polyelectrolytes) can be used which attract colloidal particles to their charged sites and cause flocculation by bridging between the adsorbed colloidal particles.

Chemical coagulants used in wastewater treatment are similar to those used in potable water treatment, including alum, ferric chloride, ferric sulphate, ferric chloride, ferrous sulphate and various organic polymers. The effectiveness of a coagulant depends on the characteristics of the colloidal material, the pH of the liquid stream and the dosage. If the solid material is to be recovered for byproduct processing, care should be exercised in selecting a coagulant which will not reduce the value of the final product.

Regardless of the type of coagulant used, mixing is important for efficient performance. The coagulant must be rapidly and uniformly dispersed in the liquid phase. Slow mixing then results in particle contact and floc agglomeration. Close control of mixing intensity and duration is needed to maximize particle contact but minimize shear forces which break-up the flocculant particles produced by coagulation.

Chemical coagulation can be used to improve the efficiency of solids removal operations such as clarification, filtration and air flotation. Dissolved contaminants are not affected except as a result of adsorption to the chemical floc.

2.2.3 Chemical Oxidation. Chlorine and ozone are the most widely used chemical oxidants. Historically, chlorine and ozone have been used for the disinfection of water and wastewater. They are receiving increased consideration for removing organic materials from wastewater that are resistant to other treatment processes.

2.2.3.1 Ozone. Ozone is a powerful oxidizing agent that reacts with many compounds present in wastewaters. It has a relatively low solubility in water and because it is unstable, having a very short half life, ozone is generated on site. Ozone has been found to be effective in many applications for colour removal, disinfection, taste and odour removal and in the oxidation of many complex organics including phenols. The ozone dosage required for oxidation of a particular waste stream depends on the characteristics of the organic matter to be oxidized, the mass of organic matter, the efficiency of the contact chamber and degree of oxidation desired.

2.2.3.2 Chlorine. Chlorine and its reactive compounds are well known chemical oxidants and have long been used in water and wastewater treatment, particularly as disinfectants. Chlorine oxidation reactions and their kinetics are dependent on a variety of process variables associated with the chemistry of chlorine itself. One of the most important is pH. Other variables include temperature, dosage and presence of inhibitors such as iron and ammonia.

The oxidation reactions of chlorine are complicated by the number of reaction pathways that exist. In the presence of ammonia or amino groups, chloramines are

produced which are much less reactive than free chlorine. Chlorine can also react directly with organics in solution to produce chlorinated hydrocarbons.

Despite the complexity of chlorine oxidation reactions, chlorine is the most economically attractive chemical oxidant at the present time.

2.2.3.3 Chlorine dioxide. Another source of chemical oxidation power is chlorine dioxide. It has been reported to be a selective oxidant for industrial wastes containing cyanide, phenol, sulphides and mercaptans. It does not react with such organics as alcohols, glycols, ketones, aldehydes and organic acids. As with chlorine, pH control is important. Chlorine dioxide is a gas which must be generated on-site. Because of its relatively high cost, the use of chlorine dioxide is limited to the oxidation of trace amounts of specific compounds in pretreated effluents.

2.2.3.4 Other chemical oxidants. Other oxidants of interest include hydrogen peroxide, bromine chloride, potassium permanganate, oxygen and bromine. Oxygen is economically attractive as air can be used as the source. It has limited effectiveness, however, due to its low oxidizing power.

Permanganate can be used to control taste and odours and for the removal of iron and manganese. Drawbacks include high cost, toxicity to aquatic biota and residual colour.

Chemical oxidants, particularly chlorine, find their major application in disinfection. In the food industry, bacterial concentrations must be carefully controlled in any water reuse or recycle scheme to ensure protection of the consumer. In meat and poultry processing, pathogenic organisms, notably salmonella, have been isolated from treated and untreated process effluent streams. Dairy and milk processing wastes can also be contaminated with potentially pathogenic bacteria and viruses. In these cases, disinfection of treated wastewater may be necessary prior to discharge.

2.2.4 Wet Oxidation. The wet oxidation process is based on the concept that substances capable of burning can be oxidized in the presence of water at temperatures between 120° and $400^{\circ}C$. Conventional combustion processes require temperatures in the 800° - $1500^{\circ}C$ range. Wet oxidation is suited to the treatment of concentrated organic streams, and liquors and sludges which are difficult to dewater. Generally, given the proper temperature, pressure, reaction time and sufficient compressed air or oxygen, a significant degree of oxidation can be accomplished.

This process is also known as wet incineration, wet combustion or wet air oxidation and, in one form, has been commercialized and patented as the Zimpro process.

Rather than quenching the reaction, water is essential to the reaction and can be present at concentrations of up to 99 percent. In the process, the waste stream is passed through a grinder which reduces any particles to less than 0.5 cm size. This material, mixed with air, is pumped into the system, and passed through heat exchangers to increase the temperature sufficiently to initiate the reaction. As oxidation takes place in the reactor, the temperature increases. The oxidized products leaving the reactor are cooled in the heat exchangers against the cold feed stock and air.

The COD of the waste serves as a primary parameter of the wet oxidation process. Wastes most applicable to wet oxidation have COD values of between 25 and 100 g/L. The degree and rate of oxidation are significantly influenced by the reactor temperature. With increased temperature, a higher degree of oxidation is possible in shorter reaction periods. The Zimpro wet oxidation process is shown schematically in Figure 12.

Wet oxidation has not been applied extensively in the waste treatment field. Major applications to date have been in the treatment of municipal sludges.

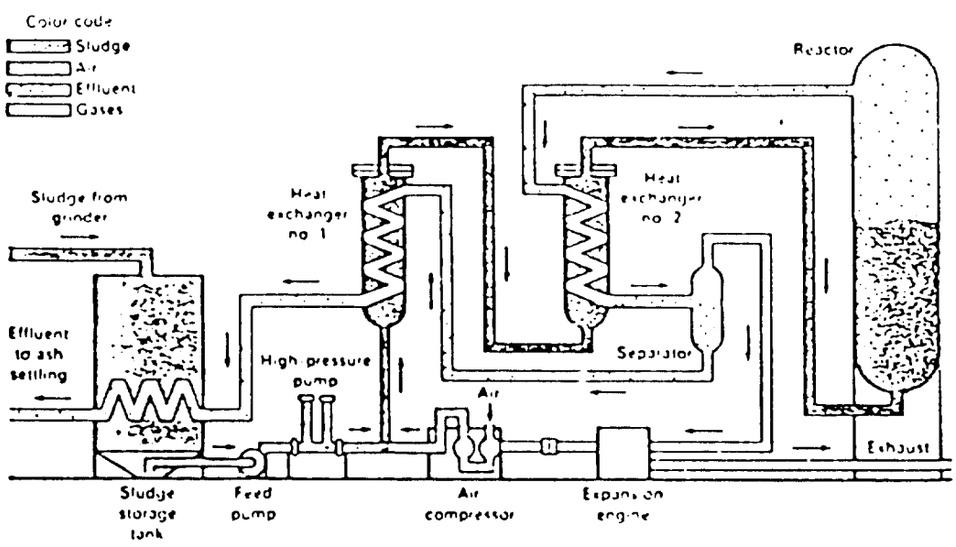

FIGURE 12 SCHEMATIC OF ZIMMERMAN WET OXIDATION PROCESS (FROM ZIMPRO, INC.)

2.2.5 Solvent Extraction. Solvent extraction is well known as an industrial process. In the food industry, solvent extraction is applied in the processing of edible oils. However, the process has not been widely used in liquid waste treatment and disposal.

Solvent extraction is basically a mass transfer operation which involves the transfer of a solute from one liquid phase to another. The process can be operated as a batch system or in a continuous mode by means of a continuous contact column, usually in a countercurrent flow mode.

This system may be used to reduce the concentration of a contaminating material in the wastewater to a level which could be treated by conventional means. Valuable solutes can be recovered from a waste stream by extraction to a volatile solvent stream.

2.3 Advanced Treatment Alternatives

2.3.1 Carbon Adsorption. Activated carbon adsorption can be considered when small quantities of non-biodegradable organic contaminants are to be removed from a wastewater stream. Pretreatment is usually applied to remove the bulk of the organics prior to carbon treatment.

Activated carbon can adsorb a large number of organic materials including many which are non-biodegradable. The mechanism of adsorption is the attachment of molecules from solution onto a solid surface due to intermolecular attractive forces. The activated carbon surface and pore structure provides a large surface area to which organic molecules can attach. Activated carbon has a preference for certain organic compounds such as phenol.

The surface and pore structure of the carbon granules determine its absorptive characteristics. These surface characteristics depend on the raw material used to generate the carbon and the manufacturing process. The raw material is dehydrated and carbonized by heat treatment, then activated by applying dry steam.

Although activated carbon is not effective for the adsorption of most inorganic compounds from solution, it has a great affinity for chlorine and can be used for water dechlorination.

Two forms of activated carbon can be used for the treatment of wastewaters; granular or powdered. When finely powdered carbon is used, the carbon is slurried with the liquid to be treated and is later removed by filtration or settling. When the granular carbon is used, the liquid is passed through a bed of carbon similar to a sand filter. Granular carbon is significantly more expensive than powdered carbon, but is easier to

recover and regenerate. Powdered carbon is most applicable in small operations where regeneration is not practical. Granular carbon in contact columns is the most widely applied system as more effective use of the adsorptive capacity is possible. Column treatment allows continuous operation and carbon can be readily recovered and thermally reactivated.

Like granular media filters, carbon columns may be operated in upflow or downflow modes. In downflow systems, suspended matter and biological growth can result in excessive pressure drops across the column due to solid accumulation in the bed. Pretreatment for solid removal and disinfection is normally required. In upflow columns, bacterial growth can result in improved treatment due to the combination of adsorption and biological oxidation. Generally, carbon-liquid contact time is the important design parameter.

Due to the economics of carbon adsorption, spent carbon is normally regenerated in a multiple hearth furnace and reused. Regeneration involves dewatering the carbon, heating in a controlled atmosphere, quenching and washing to remove carbon fines.

Activated carbon adsorption is usually applied as a final polishing step to treated effluents to provide reuseable water or to provide high-grade feed water to processes such as soft-drink manufacturing or brewing. In the food industry, it has been used to recondition solutions such as spent brines in fruit and vegetable processing.

2.3.2 **Ammonia Stripping.** Ammonia stripping has been advocated as a physical-chemical alternative to biological nitrification-denitrification to reduce the nitrogen content of wastewaters. In the process, the pH of the wastewater is raised into the range of 10.8 to 11.5, usually with lime. Water droplets are formed in the stripping tower by contact between the downward flow of water and a rising stream of air circulated through the tower. Cooling towers can be used for ammonia stripping applications.

The process is relatively simple. The wastewater is pumped to the top of the tower after it has been adjusted to a high pH, air is drawn through the falling water droplets and the ammonia is stripped from the water. The pH, temperature, hydraulic loading rate and deposition of scale affect the ammonia stripping process.

Three types of stripping units are available: countercurrent flow, cross flow and stripping ponds.

In countercurrent towers, air enters the bottom of the tower while water enters the top of the tower and falls to the bottom. These have been found to be the most efficient. In cross flow towers, air enters through the sides. Stripping towers are prone

to scaling problems. In stripping ponds, the pH of the wastewater is adjusted to about 11 then the wastewater is pumped through an air sprayer system in the pond. This cycle is repeated a number of times before discharge of the treated water.

The pH of the wastewater has a major effect on the efficiency of the process. The pH required varies with temperature but is usually about 11.0. At this point the ammonium ion is converted to free ammonia and readily released.

Air temperature is also important. The efficiency of the process decreases with lower temperatures. A reduction in temperature from 20°C to 10°C reduces the efficiency from 90 to 75 percent. When the air temperature reaches freezing, the tower is difficult to operate due to icing problems.

Another important factor is scaling of the tower packing. This results from the deposition of calcium carbonate from high pH water flowing through the tower.

Under the cold climatic conditions prevalent in Canada, the efficiency of ammonia stripping by air is drastically reduced. Steam can be used to increase cold weather performance, but energy requirements and operating costs increase significantly.

2.3.3 Ion Exchange. Ion exchange is a process in which ions in the solution are exchanged reversibly for ions contained in an insoluble resinous material. The ion exchange resins may be natural or synthetic and may selectively remove a specific ion from solution or remove all cations or anions. Ion exchange is widely applied for removal of hardness due to calcium or magnesium ions from water but is finding wider applications in industrial wastewater treatment.

Resins, particularly synthetics, are designated as cation or anion exchangers depending on the charge of the ion which is removed from the passing solution. Wastewaters are typically treated in packed columns containing the resinous material. Removal of both anions and cations from a solution requires either a mixed bed of anionic and cationic resins or two units in series.

When the ability of the resin to remove further ions from solution is exhausted, the column must be regenerated. This involves replacing the ions removed from the treated solution with the ions originally present in the resin matrix. A concentrated solution of the resin ion is washed through the column and the contaminant ion eluted from the bed. A resultant regenerant solution containing a high concentration of the contaminants is obtained. The contaminant may be recovered as a byproduct from the concentrated regenerant more economically than from the dilute waste stream.

In waste streams containing a variety of contaminants, problems can result from the non-selective nature of ion exchange resins. Much of the resin exchange

capacity can be exhausted in removing non-objectionable components of the stream, reducing the capacity to remove the desired contaminant.

Ion exchange has been applied to recover valuable metals from plating wastes, decontaminate radioactive wastes and recover low concentrations of gold and platinum from process effluents. In the food industry, ion exchange has been studied to recondition spent brines in fruit and vegetable processing and to recover protein from potato starch effluents, meat, poultry and fish processing plants and whey. In municipal wastewaters, clinotillolite has been used as a selective exchange resin for ammonia removal.

2.3.4 Reverse Osmosis. Reverse osmosis is a separation process in which dissolved solids are concentrated in solution by transport of the solvent across a semi-permeable membrane by the application of high pressures. The feed solution is fractionated into two streams, a concentrate containing the solute and a permeate consisting of the solvent removed from the feed solution.

In reverse osmosis, rejection of the solute molecule by the membrane is primarily controlled by molecule size. Rejection of organics improves with increasing molecular length and size. Open-chain, hydrogen bonded molecules such as alcohols, aldehydes, organic acids and amines tend to pass through the membranes. Reverse osmosis membranes will also prevent passage of electrolytes from the concentrate to the permeate. Rejection increases with higher valencies.

The mechanisms of reverse osmosis can be more readily understood following a description of osmosis. Osmosis is defined as the spontaneous transport of a solvent from a dilute solution to a concentrated solution across a semi-permeable membrane. The membrane impedes the passage of solute but allows the solvent to flow. Solvent flow can be reduced by applying pressure on the solution side of the membrane as shown in Figure 13. At the osmotic pressure of the solution, an equilibrium is reached. An equal amount of solvent passes in both directions through the membrane. If the applied pressure is increased on the feed solution side of the membrane above the osmotic pressure, solvent is forced to flow from the feed solution across the membrane to the permeate side of the membrane. This is the basis of reverse osmosis. A feed solution is concentrated by the removal of relatively pure liquid which is discharged as a dilute permeate.

Early reverse osmosis units were based on flat membrane sheets arranged similar to that of a plate and frame filter press. More efficient assemblies such as tube, hollow fiber and spiral wound modules have been designed. Typical modules are shown in Figure 14.

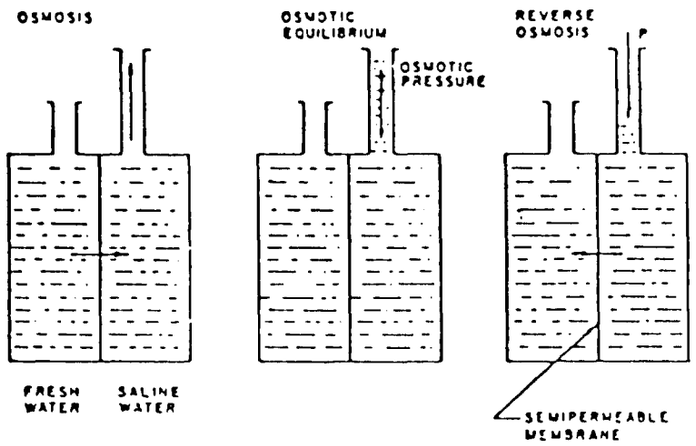

FIGURE 13 DIRECT AND REVERSE OSMOSIS

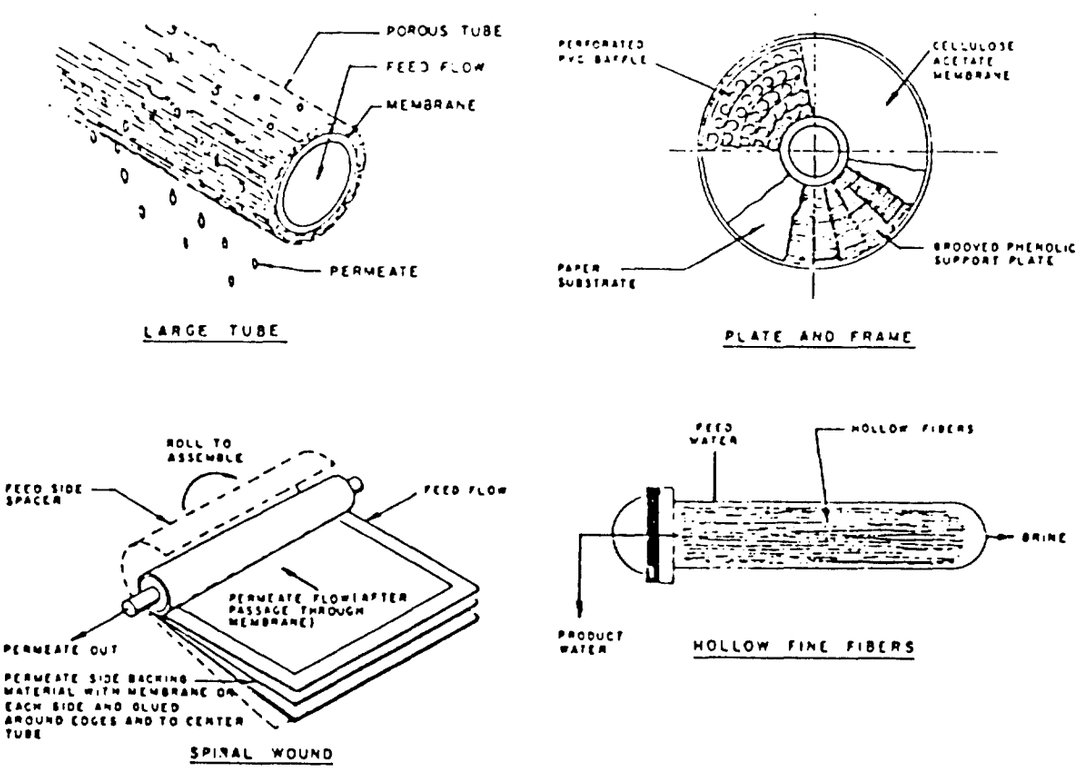

FIGURE 14 REVERSE OSMOSIS MODULE DESIGN

Design of reverse osmosis modules must provide for feed pressures of 2000 to 10 000 kN/m^2. Contaminants rejected by the membrane and the rate of permeate flow through the membrane will depend on the specific characteristics of the membrane selected. Excess turbidity, bacterial growth or emulsified oils can foul the membrane surface and reduce the transfer rate. Membrane life is affected by system pH and temperature.

Reverse osmosis is attracting considerable interest in both food processing applications and byproduct recovery from waste food processing streams. Economics do not favour reverse osmosis for purely treatment applications. In food processing, reverse osmosis has been used for concentrating maple syrup, fruit juices, egg white and coffee. Byproduct recovery systems have been designed for treatment of dairy whey and soybean whey, corn starch effluents and confectionary wastes.

2.3.5 Ultrafiltration. Ultrafiltration is a membrane process similar to reverse osmosis in that pressure across a membrane which is permeable to selected components of the solution is the driving force for separation. However, in ultrafiltration, lower pressure is used, in the order of 100 to 700 kN/m^2, as osmotic pressure is not involved. Ultrafiltration is normally applied for concentrating solutes above a molecular weight of approximately 500.

The predominant mechanism in ultrafiltration is selective sieving through molecular size pores in the membrane. Molecules smaller than the pore size pass through the membrane and are discharged as the permeate. Larger molecules cannot pass through the membrane and are concentrated in the feed solution.

Because of the relatively low flow rate through the membranes, commercial designs maximize membrane surface area. One configuration is the "storage battery" in which the membrane is cast on both external faces of a hollow plate and a number of plates arranged in parallel. Other designs include tubular membranes in which the membrane is wound as a helix or continuous spiral. Newly developed membranes can operate at temperatures up to 90°C and over a pH range of 1 to 14.

As in reverse osmosis, the membrane surface must be kept clean to maintain adequate transport rates. Concentration of rejected solute molecules at the membrane surface can reduce efficiency. The choice of operating mode is largely a question of economics.

Ultrafiltration has been applied or proposed in numerous applications for recovery of valuable byproducts from the food industry. Ultrafiltration can be used for the concentration of dairy whey or dilute milk solution or the recovery of serum protein

from slaughterhouse wastes. Ultrafiltration has also been applied in combination with reverse osmosis for concentration and fractionation of whey.

2.3.6 Electrodialysis. Separation of ionic components of a solution by passage through a semi-permeable ion-selective membrane is known as electrodialysis. In contrast to other membrane processes such as reverse osmosis or ultrafiltration, electrodialysis involves the removal of solute ions from solution rather than the removal of solvent from solution. Only ionic species are separated.

In electrodialysis, the driving force for separation is an electric field applied across membranes which selectively allow the passage of only positively charged or negatively charged ions. The two types of membranes must be used together in the electrodialysis cell. Feed solution is added to the "diluting" cells which are separated from adjoining "concentrating" cells by an anion permeable membrane on one side and a cation permeable membrane on the other side. A typical configuration is shown in Figure 15. When a direct current voltage is applied across the membrane assembly, the anions, attracted by the anode, pass through the anion-selective membrane but are prevented from further transport by the next cation-selective membrane. Similarly, cations migrate from the diluting cell in the opposite direction across the cation-selective membrane. Thus, alternate cells contain dilute and concentrated ionic solutions. Several stacks of membranes in series can be used to increase separation efficiency.

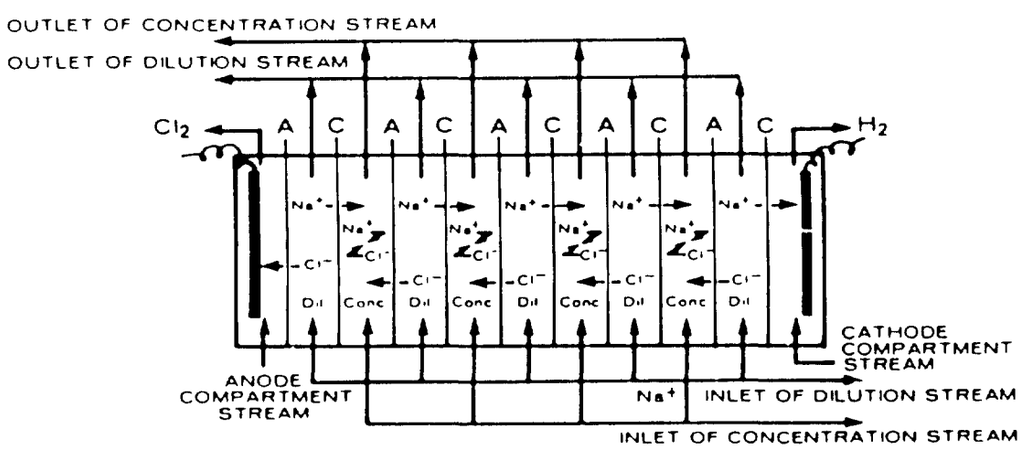

FIGURE 15 SCHEMATIC OF ELECTRODIALYSIS APPARATUS

Electrodialysis separates solutes not removable by other membrane processes. Lower operating costs are normally involved as energy requirements to transport solute molecules from relatively dilute solutions are lower than costs to transport the solvent. Unlike ion exchange, no regeneration is required in electrodialysis. Problems can result from pH changes in the area of the electrodes and the evolution of hydrogen and oxygen gases due to the electrolysis of water.

Most membranes are based on copolymers of divinyl-benzene-styrene with ion exchange groups. Membranes can tolerate temperatures up to 50°C and a range of pH. Almost all electrodialysis membranes are quite sensitive to oxidizing solutions. Membranes can become fouled by the build up of suspended matter. This should be removed down to 50 to 100 micron size. Presence of iron or manganese and tri-valent ions can also reduce efficiency.

The major application of electrodialysis has been to desalinate seawater and to recover the salt. Divalent ions will be concentrated to a greater extent than monovalent ions. Another commercial application for electrodialysis is the desalting of cheese whey. The salt content of lactose solutions is reduced sufficiently to permit their use in food applications, particularly for infant formulas.

2.3.7 Dialysis. Dialysis is the separation of solutes by means of their unequal rates of diffusion through a membrane. It has been used to recover pure solutions for reuse in some manufacturing processes.

There are a number of commercial dialyzers presently on the market which all operate on the same principle. A concentrated impure solution passes upward while a pure stream flows downward on the other side of a semi-permeable membrane. As shown in the example, the caustic soda permeates the membrane and goes into the water more rapidly than the other impurities in the waste. The concentration of caustic is always greater in the impure solution than in the water and the water which flows through the membrane into the impure caustic solution tends to dilute it.

The quantity of material which diffuses through the membrane depends on time, area of the dialyzing surface, the difference in concentrations and the temperature. Cellulose nitrate, parchment and cellophane are the principal membranes in current use.

Dialysis has been used to recover caustic soda in the textile industry and could find application for recovering brines in the fruit and vegetable processing industry.

Obviously from these discussions, there are numerous combinations of treatment alternatives available. The particular system technically and economically feasible for a given application must be determined on a site-specific basis. However, a

knowledge of the mechanisms involved in each process is necessary for proper assessment of the alternatives available. Figure 16 provides a useful summary of the unit processes described in this section of the report and the areas of application for each process based on the characteristics of the contaminant to be removed.

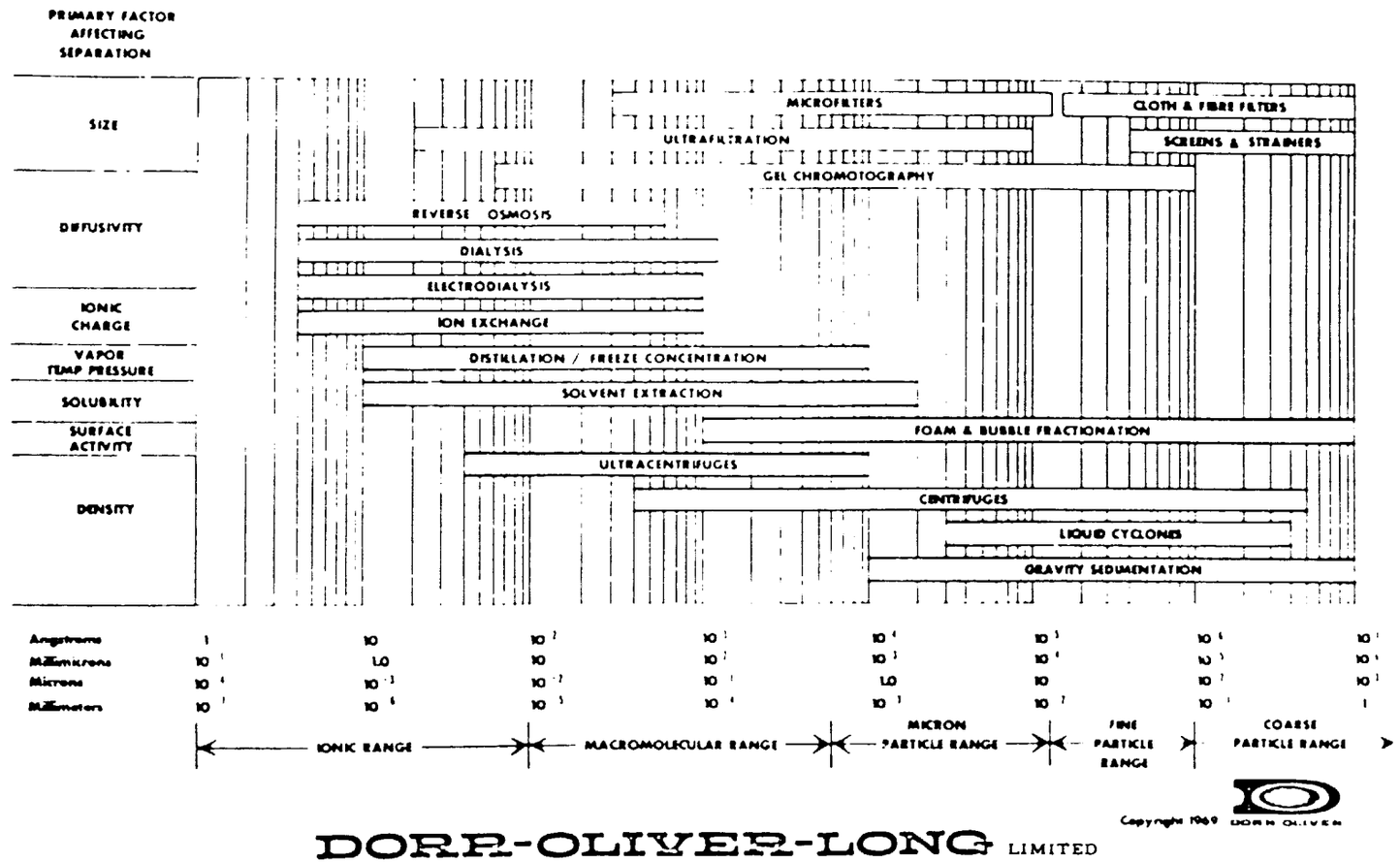

FIGURE 16 USEFUL RANGES OF VARIOUS SEPARATION PROCESSES

3 GENERAL IN-PLANT WATER AND WASTE CONSERVATION

Wastewater treatment represents a significant contribution to the overall operating costs of most industrial facilities. Food processing industries are particularly affected as they are large volume water users. Process wastes contain high concentrations of pollutants such as BOD, suspended solids, and oil and grease which are the basis for most sewer surcharge calculations. There is also the associated cost of providing large volumes of high quality process water. Energy costs can be significant if large water temperature changes are involved for refrigeration or scalding purposes.

Disposal costs are normally related to flow and contaminant loading. In facilities discharging to municipal sewer systems, a sewer surcharge is normally assessed, based on total effluent flow and contaminant concentrations. Capital and operating costs for pretreatment or complete treatment systems are normally directly proportional to process effluent quantity and quality.

Industry has an economic incentive to reduce effluent flow and loading as much as possible. There is also a legal incentive, particularly in the United States. The United States Environmental Protection Agency (U.S. EPA) has included extensive in-plant waste and water conservation criteria in the definition of Best Practicable Control Technology Currently Available (BPCTCA) and Best Available Technology Economically Achievable (BATEA) to be applied to the food processing industry. In Canada, the Environmental Protection Service have set criteria based on end-of-pipe discharges without specifying the means to be used to attain these goals. Thus, industry has the option of meeting the discharge requirements by the more economic in-plant control method rather than the costly end-of-pipe treatment method.

The application of advanced treatment processes provides an added incentive for in-plant conservation programs. These processes are often more capital intensive and involve higher operating expenses than biological treatment systems. Significant savings can result from reductions in total water usage. Further, these processes can become more economically attractive if applied to more concentrated waste streams.

Water recycle and reuse are process specific methods to reduce water usage which involve slightly different concepts. Recycle applies to the return of water to the process for multiple use in the same processing step. This normally involves some degree of treatment to remove contaminants which would interfere with processing. Reuse applies to the usage of water in more than one application in the process where progressively lower quality water is needed. In optimum reuse systems, water flow is

normally counter-current to product flow in the processing line. Clean water is used in final product washing and progressively more contaminated water is returned to the point where the most contaminated stream is used to wash and transport the raw material.

Due to the considerable economic effect of in-plant conservation programs on physical, physical-chemical and advanced treatment technologies, a significant effort during the literature search was concentrated on reviewing the water and waste conservation methods available. There are numerous water and waste conservation methods which are applicable throughout the food industry, in both old and new facilities. These general techniques are discussed in this section of the manual. More specific methods applicable only to a certain subcategory of the food processing industry are summarized in the sections dealing specifically with that segment of the industry.

In many cases, significant reductions in water usage and waste loadings can be realized by relatively simple in-plant measures which have no impact on final product quality. These methods require minimal capital expenditures and minor equipment modifications.

Each process and each individual step in the process must be evaluated with respect to water usage. The primary step in attaining a good waste management program is education of the plant personnel to ensure their awareness of the expenses involved in poor water usage practice. Steps can then be taken to minimize wastage while taking necessary precautions to maintain product quality.

A general list of simple methods to reduce water usage would include the following steps:

- Dry conveyance of raw material and product should be practised whenever possible.
- If wet transport is necessary, the length of flumes should be minimized to reduce water-product contact. Flumes should be designed to minimize water usage while maintaining transport efficiency.
- In wet transport systems, solids should be removed from the water stream as quickly as possible to reduce the solubilization of organic matter.
- Dry clean-up in plants prior to wet rinsing should be used to minimize water usage and facilitate recovery of solid material for byproduct processing.
- During tank and equipment washing, the initial low volume concentrated wash stream should be recovered for byproduct processing.
- High pressure, low volume washing systems should be utilized to minimize water usage. Limiting orifices and spray nozzles should be used wherever possible.
- Automatic shut-off valves should be installed on all hoses to prevent continuous and unnecessary discharges.

- Product wash lines should be automatically controlled so that spray systems operate only when the product is in a washing position.
- Spillage from tanks should be controlled by automatic level controlled systems.
- Frozen raw materials, such as fish or vegetables, should be thawed with hot air instead of water wherever possible.
- Concentrated waste streams should be segregated and routed to byproduct recovery systems rather than diluted with other plant wastes.
- Clean water such as jacket cooling, air conditioning and steam condensate should be segregated from contaminated water streams.
- Consideration should be given to segregation of contaminated water streams having vastly different characteristics. This will allow installation of a treatment process designed specifically for a certain waste stream rather than for a complex mixture of wastes.
- Evaporative cooling or air cooling in cold climates can reduce water usage significantly compared to conventional water cooling systems.
- Contamination of potentially clean water streams such as barometric condenser water should be eliminated or reduced as much as possible by controlling entrainment.
- Reuse and/or recycle of process water should be considered wherever possible, consistent with final product quality.
- Byproducts present in waste streams should be recovered wherever technically and economically feasible. The ultimate goal of the waste management scheme would be the total utilization of raw material.
- Increasing yields in food processing is often a more economical means of reducing waste loads than byproduct recovery. In byproduct recovery systems, a market must be found for the material recovered from the waste stream. However, if the yield is increased, a market is already available for the product and the waste loading is simultaneously reduced.

4 MEAT, POULTRY AND RENDERING

4.1 Processes and Waste Properties

The red meat processing industry includes both the slaughterhouse, where killing, dressing and some byproduct processing occurs, and the packinghouse, where the slaughterhouse carcasses are processed into saleable commodities. Packinghouse operations include cooking, curing, smoking and pickling as well as cutting, trimming and packing. The red meat industry includes the slaughter and processing of cattle, hogs, calves, sheep and horses.

Rendering operations are normally associated with both slaughtering and packing facilities. Many meat packers operate their own rendering facilities to handle blood, condemned animals, bones and trimmings. Independent renderers purchase waste materials from plants which do not have rendering facilites, or from grocery stores and butcher shops.

A process flowsheet for an integrated packinghouse is given in Figure 17. Animals are delivered from the stockyards to the slaughterhouse where they are immobilized by various methods, stuck and bled in the killing room. Blood is recovered and processed by drying or steam coagulating. In some cases, the collected blood may be sold to an independent renderer. Depending on the animal, hides, skin or hair are removed for further processing. The carcasses are beheaded, eviscerated and trimmed prior to final washing and refrigeration. Viscera including hearts, livers and kidneys are recovered as edible products. Paunch from ruminants and hog intestines may also be recovered. Other solid wastes are sent to the rendering operations.

In the meat processing operations, the carcasses are cut, trimmed and deboned. The meat is then processed to produce such commodities as hams, bacon, canned meats and sausages. Solid wastes from these operations are also recovered for rendering.

Rendering involves the separation and processing of fats and proteinaceous material to produce tallow or lard and animal feed products. Rendering is classed as "edible" and "inedible" depending on the ultimate product market which is determined by the composition of the feed stock to the process. The three basic rendering processes used in the meat industry are wet rendering, dry rendering, and low temperature continuous rendering, the most advanced rendering technology. A schematic flowsheet of a typical rendering operation is shown in Figure 18.

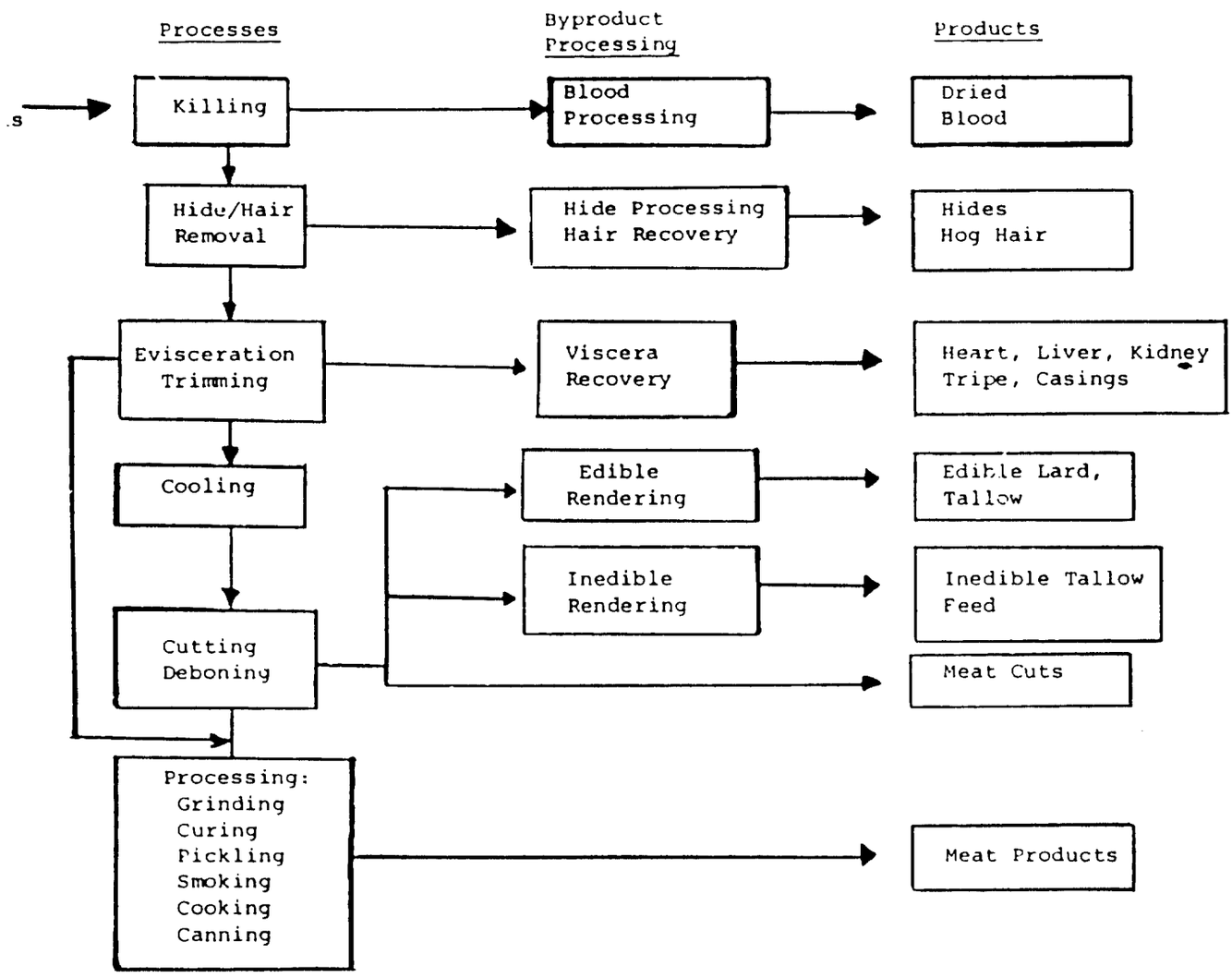

FIGURE 17 FLOWSHEET FOR MEAT PROCESSING FACILITIES

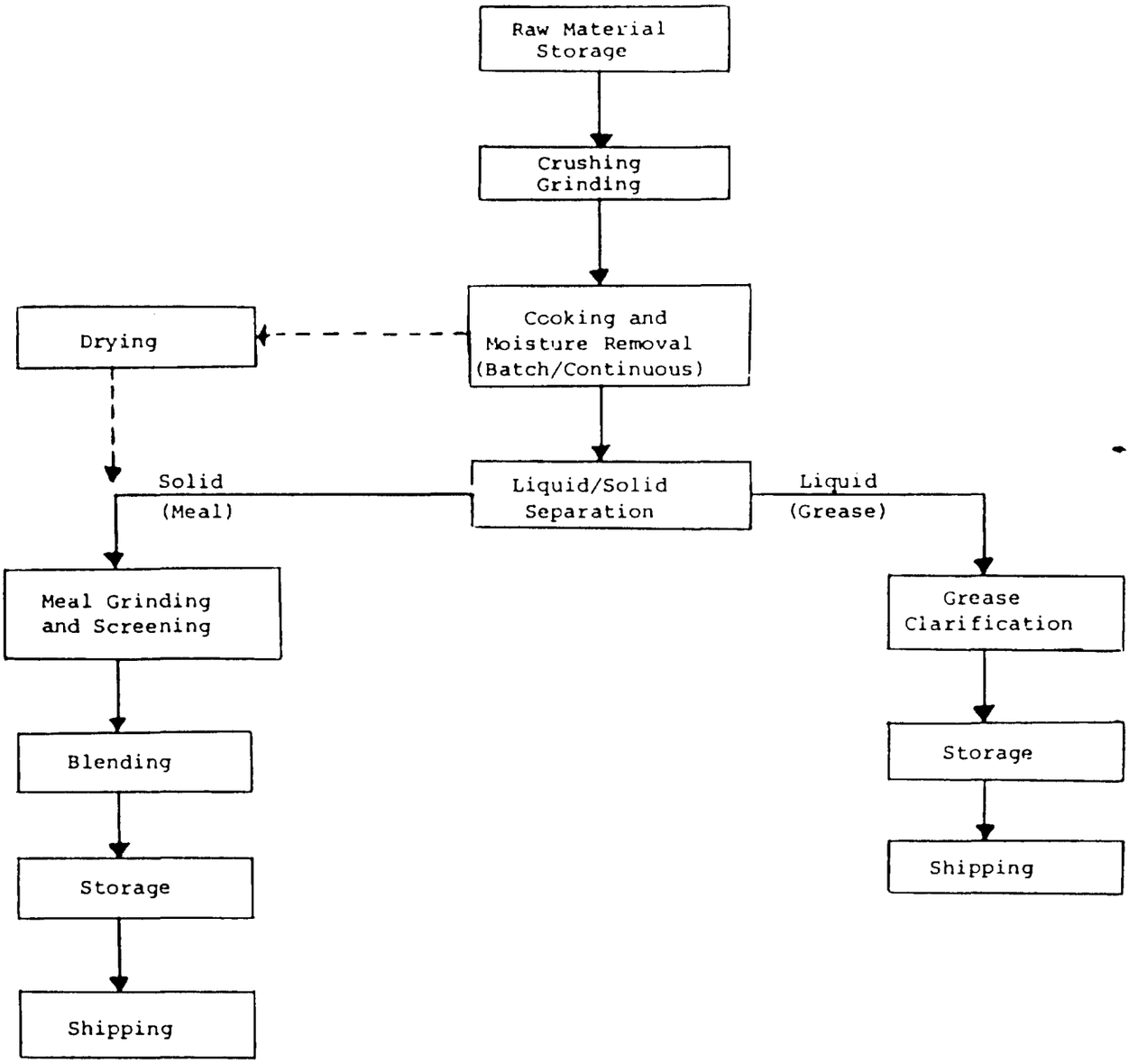

FIGURE 18 FLOWSHEET OF A TYPICAL RENDERING OPERATION

Wastewaters from meat processing operations result from the slaughtering and dressing processes and are primarily the result of washing of equipment, floors and carcasses. Waste strength is strongly dependent on such factors as plant size, age, management policy regarding water usage and level of installed technology. Inadequate blood recovery systems can result in discharges of high strength wastes. Wet paunch handling systems result in a ten-fold increase in effluent BOD relative to dry paunch handling operations. Plant cleanup practices also influence the waste volume and strength. Wastewater streams are characteristically high in dissolved and suspended organic matter, notably blood and other proteinaceous matter, and fats and greases. Studies in the United States have shown that the BOD discharges are independent of the type or types of animals being processed in the packinghouse.

In a survey of the Canadian meat processing industry, water consumption in packing plants ranged from 3 to 20 litres per kilogram Live Weight Killed (LWK). Similar data from American practice indicates a range of 9 to 17 litres per kilogram. Organic waste discharges from packing plants in the United States and Canada have been characterized according to the level of technology in the plant. Data are summarized in Table 1.

TABLE 1 CHARACTERISTICS OF MEAT PROCESING WASTES

	kg BOD per 1000 kg LWK[1]	
Level of Technology	Canadian Practice[2]	American Practice[3]
Old	23.0	20.2
Typical	13.1	14.4
Advanced	7.2	11.3

[1]LWK = Live Weight Killed

[2]Stanley Associates Engineering Limited (1974)

[3]Jones (1974)

These data include discharges from associated rendering operations. The technology categories were basically as follows in the Canadian survey:

'Old' Technology	-	blood sewered,
	-	wet paunch handling with no solids recovery,
	-	wet edible rendering with no tankwater evaporation,
	-	wet inedible rendering with no tankwater evaporation,
	-	wet process area cleanup,
	-	no primary material recovery.
'Typical' Technology	-	blood recovery,
	-	wet paunch handling with solids recovery,
	-	wet edible rendering with tankwater evaporation,
	-	dry inedible rendering,
	-	dry process area cleanup followed by washdown,
	-	grease or solids recovered.
'Advanced' Technology	-	blood recovery,
	-	dry paunch handling,
	-	low temperature continuous edible rendering,
	-	dry inedible rendering,
	-	dry process area cleanup prior to washdown,
	-	grease and solids recovered.

There were some minor differences in the technology categories used in the American and Canadian surveys; however, as shown in Table 1, the waste loadings are similar. Further details of the methods available to reduce waste loads from those characterized as "old technology" to those of the "advanced technology" are described in Section 4.2. It is emphasized that plants utilizing similar systems can have vastly different waste characteristics, and temporal variations are significant at any single plant.

Wastewater characteristics from rendering operations depend on the raw materials processed and the type of rendering system. Liquid drainage from raw material delivery and storage areas can contribute significantly to the total waste load. Condensate from cooking and drying operations, spills and plant cleanup operations are other major wastewater sources. Sewered tankwater in wet rendering operations and bloodwater from steam coagulation of blood are high strength wastes which should be evaporated rather than discharged. A summary of wastewater characteristics from independent rendering plants in the United States is given in Table 2.

TABLE 2 CHARACTERISTICS FOR RENDERING INDUSTRY WASTEWATERS[1]

	Average Value	High	Low
Flow, L/1000 kg RM[2]	3261	20 000	467
BOD_5, kg/1000 kg RM	2.15	5.83	0.10
SS, kg/1000 kg RM	1.13	5.18	0.03
Grease, kg/1000 kg RM	0.72	4.18	0.00
COD, kg/1000 kg RM	8.04	37.03	1.59
Total Volatile Solids, kg/1000 kg RM	3.34	13.12	0.04
Total Dissolved Solids, kg/1000 kg RM	3.47	11.67	0.01
Total Kjeldahl Nitrogen, kg/1000 kg RM	0.476	1.200	0.120
Ammonia, kg/1000 kg RM	0.299	0.740	0.080
Nitrate, kg/1000 kg RM	0.008	0.060	0.0001
Nitrite, kg/1000 kg RM	0.003	0.040	0.00002
Chloride, kg/1000 kg RM	0.793	2.56	0.080
Total Phosphorus, kg/1000 kg RM	0.044	0.280	0.003

[1]Train et al, (1974).

[2]RM = Raw Material

In the poultry industry, plants generally do the complete processing from live bird to final market commodity. A schematic flowsheet of the processing steps is shown in Figure 19. Live birds are delivered to the processor where they are hung on a moving conveyor system. The birds are transported to the killing station where the jugular vein is cut. In some plants, the birds are electrically stunned prior to killing to reduce body movement during bleeding and improve blood recovery in the bleeding area. The birds are then immersed in hot water to loosen body feathers and defeathered, commonly by means of rotating rubber fingers that mechanically remove the loosened feather.

Feathers not removed mechanically are removed manually or by singeing of the carcasses. The birds are eviscerated and the head and feet removed prior to a final bird wash. The product may be cut up for marketing or sold whole. Whole birds are chilled in a series of cold water tanks, then drained, sized, graded and packaged prior to freezing.

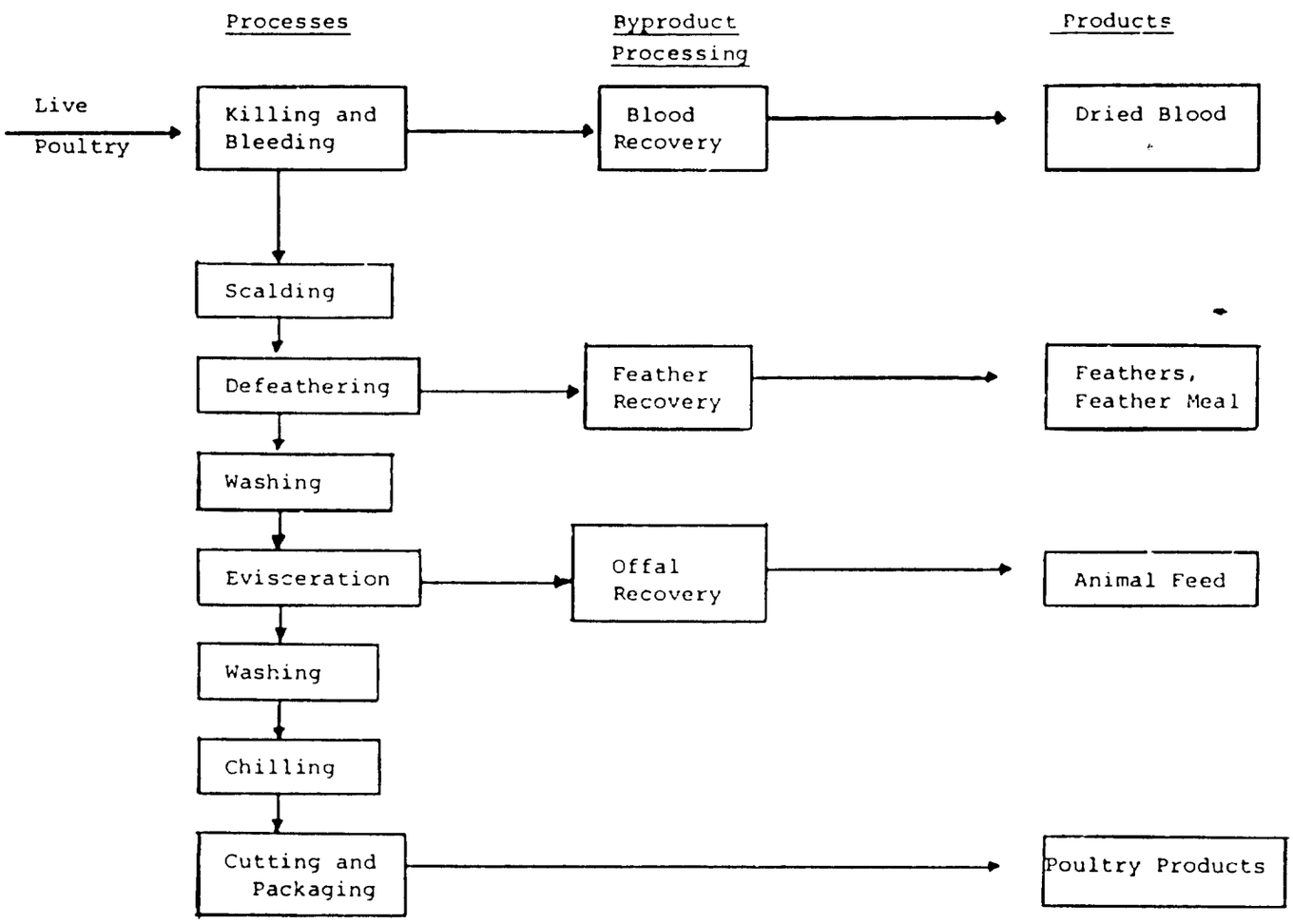

FIGURE 19 FLOWSHEET FOR POULTRY PROCESSING FACILITIES

Few poultry processing plants operate their own rendering facility. However, most plants recover feathers, blood and offal which are sold to independent renderers for the production of feed supplements, pet foods and fertil zers.

Liquid wastes from poultry processing operations contain varying amounts of blood, feathers, fleshings and fats and are characteristically high in BOD, suspended solids, oil and grease and ammonia. As in the red meat industry, water usage and waste strengths vary considerably between plants depending on the plant size, age, management policy and level of installed technology. Water usage figures in North America range from approximately 45 litres per bird to approximately 4.5 litres per bird. Typical water usage is in the range of 10 to 25 litres per bird.

Waste strength is dependent on the effectiveness of the blood recovery operations, the technology applied for feather and offal recovery and cleanup practices. The Canadian poultry processing industry was surveyed and waste loads characterized according to installed technology in a manner similar to that presented for the red meat industry. The results are presented in Table 3. The technologies were characterized as follows for the poultry industry:

'Old' Technology:	-	wet receiving area cleanup,
	-	no blood recovery,
	-	manual feather and offal removal,
	-	wet plant cleanup,
	-	feather flume water screened and sewered,
	-	no grease or solids recovery.
'Typical' Technology	-	dry receiving area cleanup,
	-	blood recovery,
	-	flowaway feather and offal removal,
	-	dry plant cleanup,
	-	feather flume water screened and recycled,
	-	grease or solids recovery.
'Advanced' Technology	-	dry receiving area cleanup,
	-	blood recovery,
	-	dry feather removal,
	-	flowaway offal removal,
	-	dry plant cleanup,
	-	grease and solids recovery.

TABLE 3 CHARACTERISTICS OF POULTRY PROCESSING WASTES[1]

Level of Technology	kg BOD/1000 kg LWK[2]
Old	12.6
Typical	9.4
Advanced	8.4

[1]Stanley Associates Engineering Limited (1976)

[2]LWK = Live Weight Killed

As in the case of red meat processing, plants utilizing similar systems can have vastly different waste characteristics and temporal variations are significant at any single plant.

4.2 Water and Waste Management

4.2.1 Meat Packing. There are opportunities for water and waste conservation in nearly every stage of red meat processing. Some of the in-plant steps which should be considered to reduce process effluent loads and improve byproduct recovery are discussed in the following subsections.

4.2.1.1 Animal holding areas. Dry cleanup of holding pens should be practised to reduce the flushing of solid waste materials to the sewers. If feasible, separate sewers should be provided for pen wastes to prevent dilution with other process effluents. Segregation of concentrated pen wastes facilitates solid separation with relatively small screening equipment. Drinking water in the holding pens should be minimized as much as possible consistent with the needs of the animals. The water supply should be automated by timer or level controls to prevent continuous overflows to the sewer. As in any cleaning operations, high pressure - low volume equipment should be used in holding pens to minimize the volume of waste requiring disposal. Consideration should be given to disposal of pen wastes directly on land wherever possible.

4.2.1.2 Killing areas. Blood recovery is essential in the killing room to minimize the organic strength of the process effluent.

Furthermore, the market value of high protein blood meal provides a strong economic incentive to reduce blood losses as much as possible. Blood recovery is practiced in most slaughterhouses and packing houses.

In Europe, where blood is more widely accepted as a food product, sophisticated recovery systems have been developed which minimize losses and prevent contamination of the material. Hollow sticking knives equipped with anti-coagulant feed systems and vacuum collectors are available.

As a minimum, bleeding areas should be curbed and drained to a separate blood collection tank. The length of the bleeding area should be maximized as much as practical to reduce losses. Floors should be dry cleaned prior to a low volume rinse. If usage is minimized, the rinse water can also be collected in the blood tank without adversely affecting the economics of the drying operation. Drains and piping should be carefully designed to prevent plugging due to coagulated blood. Methods to prevent blood coagulation in pipes are available and should be considered as an alternative to flushing plugged lines with water.

4.2.1.3 Blood processing. Blood drying results in significantly less organic waste than wet blood processing. When blood is coagulated by steam, significant losses occur in the separation of the coagulated material from the bloodwater. The bloodwater, which is commonly discharged after screening or centrifugation, represents about 15 percent of the BOD load of the original blood.

4.2.1.4 Hide/Hair removal and processing. The major waste materials resulting from hide removal are blood and fleshings. Waste discharges can be minimized by careful cleanup procedures. Hide washing and fleshing waters should be screened or settled to recover solids prior to discharge.

Hair removal from hogs represents a major source of pollution due to discharges of scald tank water, dehairing and hair flume water. Continuous overflow from scald tanks is unnecessary. Scald tanks can be designed to allow gravity settling and separate collection of solid matter. Dehairing machines can be modified to use high pressure low-volume sprays. Hair flumes and drains should be carefully designed to prevent plugging and ensure minimal water requirements. Consideration should be given to dry conveyance of hair to eliminate flume water.

Hog hair is normally recovered from flume water by screens. The screens should be located as close as possible to the dehairing operation to reduce contact time and dissolution of pollutants. Hair flume water should be reused after screening.

The technology exists to skin hogs. However, no data are available regarding water usage and organic loads from such operations.

4.2.1.5 Paunch handling. Wet dumping of paunches results in excessive discharges of manure fines and dissolved organics. Dry dumping is the preferred method. The paunch material can be used as a soil conditioner. If tripe is not recovered, the unopened paunch can be routed directly to a dryer to produce an acceptable feed product. Alternately, the entire paunch and its contents can be removed by trucking to off-site disposal.

Tripe washing adds manure fines and grease to the process effluent. These materials can be more readily recovered prior to dilution by means of a rotating screen.

4.2.1.6 Intestine handling. Hashing, washing and casing saving contribute significantly to the overall process effluent. Deslimer wastes in casing saving operations should be recovered in a small catch basin in the immediate casing area and passed to the rendering operation. Cleaning and washing spray nozzles should be carefully designed to give maximum efficiency with minimal water usage. Hasher-washer screens are often eliminated completely and the entire intestine sent to rendering. This can result in some degradation of grease quality but is often offset by increased yield and reduced pollutant loadings.

4.2.1.7 Rendering. In wet rendering operations, tank water should not be discharged to sewer. This concentrated waste stream can be evaporated to produce stickwater which can be dried as animal feed or blended directly with other dry rendering products. Low or medium temperature continuous edible rendering results in minimal water discharges and should be considered in new systems.

Entrainment in barometric condensers resulting from foaming or boil-over should be carefully controlled. The pollutant load resulting from direct contact condensing of vapours could be reduced by the use of surface condensers.

4.2.1.8 Cleanup operations. Cleanup procedures strongly influence water consumption and waste loads. The general comments regarding cleaning procedures in Section 3 are all pertinent. Initial dry cleaning of all areas should be practised. Automatic hand operated valves on small diameter hoses using high pressure spray nozzles should be used in washdown. Automated CIP (clean-in-place) procedures for viscera pans, tanks, conveyors, etc. will conserve water in these areas.

4.2.2 Poultry Processing. Many of the in-plant controls applicable to meat processing can be equally valuable in the poultry processing area.

4.2.2.1 Receiving area. Extensive storage of live birds prior to processing can be minimized by careful scheduling of deliveries to coincide with the rate of processing in the plant. When storage is unavoidable, discharges from the receiving areas can be reduced by a program of dry cleanup and the use of high pressure sprays during final washdown.

4.2.2.2 Killing and bleeding. As in red meat processing, blood can contribute significantly to the organic waste load if not recovered from the killing area. Bleeding should be confined to an enclosed area with suitable drains and collection system. Dilution of blood during cleanup should be minimized as much as possible by an initial dry cleaning followed by low volume washing. Stunning of the birds prior to killing reduces body movement during bleeding. This minimizes splattering of blood out of the bleeding area.

4.2.2.3 Scalding and defeathering. Poultry scald tanks overflow continuously resulting in high water usages and pollutional loads. However, the scalder is an ideal location for water reuse as it represents the first washing of the birds and potable water is not required. Chiller water overflow can be reused in the scalders to reduce water consumption in the process. Heat exchangers between chiller and scalder overflows would reduce energy requirements in such a system. Scald tanks could also be designed to allow gravity settling and separate collection of solid material for disposal. The use of microwaves as an alternative to hot water is also being investigated.

Careful design of spray headers in mechanical defeathering machines can reduce water usage without affecting efficiency. Feather flume water can be reused after screening. Alternately, chiller water or scalder water can be used in the flowaway feather flumes. Several poultry processors are seriously considering dry feather removal systems to eliminate the use of water in this area.

4.2.2.4 Evisceration. The principal water usage in evisceration is offal flume water. Dry offal conveyance systems are available and have been installed by several poultry processors. While dry conveyance is the ultimate solution, flowaway flumes can be designed to require minimal water volumes to maintain movement of the offal. Reuse of water from such areas as the chiller might also be considered depending on the local health regulations.

Continuous supplies of fresh water are normally provided for hand washing on the evisceration lines. Automatic press-to-open valves should be used in these areas to reduce water usage.

Final bird washers require potable water. However, the water consumption in these units can be reduced by the use of special spray nozzles. Furthermore, the washwater may be reused in various other areas of the process.

4.2.2.5 Chilling. Chiller water flow rates are established by health inspectors based on the requirements to maintain final product quality. However, ice volumes added to the chillers should be considered in calculating water addition rates. Chiller water overflow can be reused in other operations in the plant. Recycle of treated chiller water to the chiller is presently being evaluated. This recycle scheme would result in significant energy conservation.

4.2.2.6 Cleanup operations. Dry cleanup and high pressure washing equipment described for red meat processing operations are equally applicable in the poultry industry. Employee awareness of the economic implications of excessive water usage is imperative in any successful water and waste management program.

4.3 Physical Treatment Process Applications

4.3.1 Screening. As a considerable fraction of the waste load from meat, poultry and rendering operations is in the form of particulate matter such as fleshings and grease, screening is an obvious pretreatment alternative. Most of the screen designs described in Section 2.1.2 have been applied to these wastes. In meat processing, the most common screening applications include:

- dewatering paunch manure,
- recovering hog stomach contents,
- recovering hog hair and solids from hide preparation,
- recovering coagulated blood,
- removing grease and solids from tripe washing,
- pretreating total process effluent from slaughtering and packing operations.

In poultry processing, screens are also commonly used to remove feathers and offal from flow-away flume water. Fine mesh rotary screens have also been used to remove solids from poultry processing effluents after biological treatment.

The efficiency of the screen depends on the screen design and mesh size as well as the characteristics of the waste stream. Pilot-scale evaluations are normally warranted prior to selection of a specific screen. In selecting a particular screen, consideration should be given to such factors as susceptibility to blinding, water content of the recovered solids, and maintenance requirements.

In many cases, a number of separate screens suitably located to treat concentrated discharges from a particular processing operation are more effective than a single screen treating the combined effluent from the total slaughtering and packing operation. Rapid separation of solids and grease from the liquid stream reduces the solubilization of organic matter. Furthermore, the screen can be selected to handle a particular type of solid material rather than a heterogeneous mixture of particulates and grease.

4.3.2 Gravity Clarification. Gravity separation of solids and grease is the most common pretreatment step in the meat and poultry industry. Most processing plants have catch basins of some type installed. Many of these units require manual cleaning of settled sludge or floated grease, as mechanical scum and sludge scraping equipment is not provided. Typically, simple catch basins are designed to provide hydraulic retention times of 20 to 40 minutes and remove approximately 25 percent of the total process effluent BOD. In many installations, a number of small catch basins may be provided to remove heavy solids and grease loads immediately from concentrated waste streams prior to dilution. In manually cleaned catch basins, frequent removal of accumulated solids and grease is required to ensure adequate removal efficiency and to prevent the formation of noxious odours.

Clarifiers equipped with sludge and scum removal mechanisms are superior to simple basins for pretreatment of meat and poultry processing wastewaters. Typically, clarifiers for these applications are designed to provide hydraulic retention times of one to two hours at a surface loading in the range of 20 to 40 $m^3/m^2/day$. Rectangular clarifiers are more common in pretreatment applications than circular clarifiers. Such systems generally provide 20 to 30 percent BOD removal, 40 to 50 percent suspended solids removal and 50 to 60 percent grease removal. These removals depend on the settling characteristics of the solids, the degree of emulsification of grease, the peak hydraulic loading of the system, and operator attention to sludge and scum removal cycles and equipment maintenance.

4.3.3 Flotation. Next to screens and catch basins, air flotation is the most prevalent pretreatment system in meat and poultry processing operations. Dissolved air flotation, operated in the total influent pressurization or recycle pressurization mode, is the most common system. The units typically operate at hydraulic loadings in the range of 30 to 60 $m^3/m^2/day$. Circular and rectangular designs are available. Provision for removal of settled solids in such units improves operation and reduces system down-time required for cleaning.

Typical removal efficiencies for dissolved air flotation units are 30 to 35 percent BOD, 60 percent suspended solids and 80 to 90 percent grease without chemical addition. Flotation normally will produce a sludge containing a lower moisture content than sedimentation, which has advantages in subsequent byproduct recovery operations.

Good control is more important to efficient operation of flotation systems

indicate that chiller water in poultry plants can be reused to flume giblets after diatomaceous earth filtration and chlorination. The Uniflow filter has also been used for the same purpose.

4.3.5 **Centrifugation.** Meat processors, particularly those with an associated rendering plant, are familiar with the operation of high speed centrifugal equipment as they are commonly used for separation of tallow and solids in the process. Thus, they commonly use centrifuges, particularly solid bowl units such as the Super-D-Canter (Sharples-Stokes Div., Pennwalt Corp.), for sludge dewatering despite the higher operating costs and maintenance requirements of such equipment. These units can typically reduce the water content of recovered solids and grease to the range of 60 to 80 percent which eases the volumetric load and energy requirements on subsequent drying equipment.

4.3.6 **Evaporation.** The energy costs involved in driers and evaporators makes these processes unsuitable for wastewater treatment. However in the area of byproduct recovery, they are the basis for rendering operations and have been applied to dry blood and paunch material as animal feeds. Simple drum driers can also be used to dry sludges recovered from physical-chemical treatment processes.

4.4 Physical-Chemical Treatment Process Applications

More sophisticated chemical treatment methods such as chemical oxidation, wet air oxidation and solvent extraction have not been applied beyond laboratory scale to meat and poultry processing effluents. However, chemical precipitation and flocculation schemes are relatively common. Considerable background data regarding the efficiency of various flocculants, coagulants and precipitants is provided in Volume 2 of the manual. The initial chemical selection should be made based on careful laboratory testing of the alternatives available and economic considerations including chemical costs and disposal of the recovered material. If the recovered proteinaceous material is to be included in an animal feed product, additional care is necessary in the selection of chemicals to ensure that the final product is acceptable to the regulatory authorities.

Either gravity sedimentation or air flotation can be selected for separation of the coagulated material. The efficiency of both processes can be significantly improved if the system is well designed and adequately operated. Mixing is an important consideration in the design. Chemical addition to either clarifiers or flotation cells requires closer operator control than in simple physical separation schemes as pH and chemical dosage must be maintained within a narrow range and requirements can vary during the day at any plant. Equalization can reduce variations in influent quality, substantially improving process efficiency.

Of the conventional coagulants, alum, ferric sulphate and lime are most commonly used. In meat and poultry processing operations, iron salts have an advantage as they can result in some precipitation of proteins, particularly blood. Each coagulant has an optimum pH range which should be precisely defined during the initial laboratory testing and carefully controlled in the full-scale operation. At high concentrations, these metal salts may be unacceptable in an animal feed product. If this is the case, the recovered sludge will have to be disposed of by alternate means, adding considerably to the operating costs.

Organic polyelectrolytes can be used as the sole coagulant or in conjunction with various metal salts to improve removal efficiency. In some cases, problems occur in attempting to separate solid proteinaceous material from grease in subsequent rendering operations after the addition of polymers. Use of the recovered material as a feed may also be restricted by the presence of the polyelectrolyte. In this regard, chitosan is being actively researched as a waste treatment coagulant. As it is produced from shellfish waste, it should not be restricted in the same fashion as some synthetic polymers. Utilization of chitosan will depend on its cost effectiveness compared to other products.

Precipitation of proteins from meat and poultry processing operations is attracting considerable attention as both a waste treatment method and a source of valuable proteinaceous feed materials. The Aminodan process, based on protein precipitation with a proprietary chemical, is well accepted in Europe but has not been actively marketed in North America. The Alwatech process, based on protein precipitation at low pH with purified sodium lignosulphonate, is currently used by five European abattoirs and three European poultry processors. The first North American plant is described in detail in Section 12.4. The Alwatech process appears to be a viable alternative for pretreatment of meat and poultry processing effluents. However, in rendering operations, the organic content of the waste is often in the form of degraded proteins which are not amenable to precipitation with lignosulphonates.

The design details, treatment efficiencies and cost implications of physical-chemical treatment of meat and poultry processing effluents are very site-specific. Laboratory and pilot-scale studies in conjunction with detailed economic evaluations are needed in each individual case.

4.5 Advanced Treatment Process Applications

Advanced treatment processes have not been researched to any significant degree for the treatment of meat, poultry and rendering process effluents. Although

ultrafiltration of blood has been evaluated as a means to recover edible protein, the technology requires considerable development before commercial application is feasible. The exception is the use of ion exchange resins, manufactured from regenerated cellulose, to recover proteins from meat packing wastes.

Pilot-scale studies using columns and stirred tank reactors have indicated that protein adsorption from abattoir effluents is technically feasible. Excellent treatment efficiency is possible. However, the recovered protein is suitable only as an animal feed supplement. At the present market value for such products, the process is not economically feasible.

5 DAIRY PRODUCTS INDUSTRY

5.1 Processes and Waste Properties

The five major commodity segments of the dairy products industry are as follows:

- fluid mild products,
- butter,
- cheese,
- ice-cream and frozen desserts,
- condensed and evaporated products.

In some cases, several of these products may be produced in a single dairy products facility. In Figure 20, a schematic flowsheet of an integrated dairy process is illustrated.

Dairy wastes are primarily diluted milk resulting from product losses during handling and transporting or the result of intensive washing operations required to maintain sanitary conditions in the plant. Major product losses result from the following operations:

- sludge discharges from clean-in-place (CIP) clarifiers,
- start-up shutdown and changeover in high-temperature-short-time (HTST) pasteurizers,
- evaporator entrainment,
- bottle and case washing,
- tank, can, piping and other equipment washing,
- breakage and spillage in packaging equipment,
- production changeover in filling machines.

In addition, cheese and butter making processes produce high strength wastes, whey and buttermilk respectively, which can significantly increase the organic waste load if intentionally or accidentally discharged. The component of principal concern in dairy process effluents is the biochemical oxygen demand (BOD).

Due to the diversity of products handled in the dairy products industry, the "milk equivalent" has been used to relate the actual production of various commodities to a common denominator, the raw milk received at the plant. Most up-to-date waste

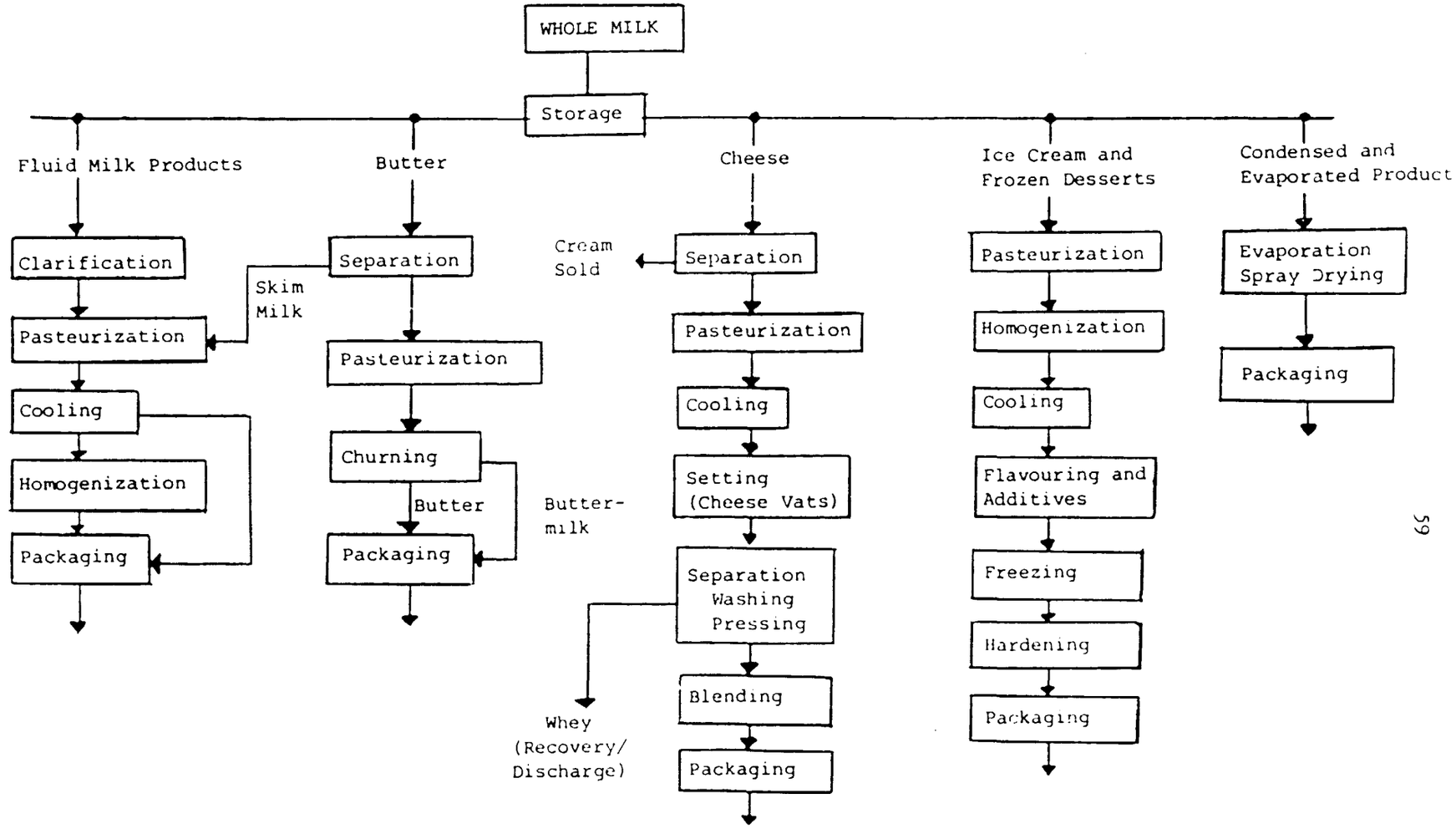

FIGURE 20 FLOWSHEET FOR DAIRY AND MILK PROCESSING PLANTS

characterization studies in the dairy industry relate water usage and process effluent loadings to the plant throughput in terms of milk equivalents. A summary of conversion factors relating actual product to milk equivalents is given in Table 4.

Water use in the dairy products industry varies considerably depending on the complexity of the plant and the in-plant water management practices. Median water usages in the Canadian dairy products industry by commodity segment are summarized in Table 5. The water usage data includes both process and cooling water.

Process waste loads also vary considerably and are greatly influenced by the degree of in-plant control of raw material and product losses. The raw waste loads by commodity segment for the Canadian dairy products industry are summarized in Table 6. Similar data for the American dairy industry is summarized in Table 7. Waste loads in Canadian and American practice are similar; however, water usage in Canadian plants tends to be somewhat higher. From Table 7, the variation in waste strength is evident. Temporal variations at any single plant can be severe, particularly in small facilities which utilize batch processes. The impact of whey discharges on the waste strength is evident from these data.

5.2 Water and Waste Management

Milk product losses typically range from 0.5 percent in large technologically advanced plants to in excess of 2.5 percent in small, old plants. It is considered that, given maximum effort by management, water usage in most plants could be reduced to approximately 0.50 litres per kg milk equivalent processed and effluent organic loads reduced to about 0.5 kg BOD per 1000 kg milk equivalent processed. These levels are obviously much lower than the median levels in the Canadian dairy products industry cited in Section 5.1. Considerable improvement in water and waste management is possible.

One immediate area of improvement in water usage is dairy cooling water systems. Less than ten percent of Canadian plants recycle any cooling water. Cooling water can represent up to seventy-five percent of the total water usage in some dairy products plants.

Many of the water saving and waste controlling modifications outlined in Section 3 are applicable to the dairy products industry and can be made in existing plants with minimal capital expenditures. Steps specific to the dairy industry include:

- complete drainage of all tanks and pipes before rinsing,
- recovery of low-volume, concentrated initial rinses of tanks, cans and equipment,
- automatic shut-off valves on all hoses,

TABLE 4 SUMMARY OF CONVERSION FACTORS RELATING ACTUAL PRODUCT TO MILK EQUIVALENTS

One Pound Product	Milk Equivalent in Pounds
Butter	21.3
Whole Milk Cheese	9.9
Evaporated Milk	2.1
Condensed Milk	2.4
Whole Milk Powder	13.5
Cottage Cheese	7.12
Non-fat Dry Milk	12.5
Whey	1.1
Dry Whey	17.6
Whey Cream Butter	40.7
Dry Butter Milk	249
Ice Cream*	2.67

*One gallon ice cream weighs 5.4 lbs.

TABLE 5 WATER USAGE IN THE CANADIAN DAIRY PRODUCTS INDUSTRY[1]

	Total Water Usage litres/kg ME[2]	
Commodity	Median	Range
Fluid Milk Products	3.90	1.21 - 9.15
Butter Products	1.30	0.82 - 3.21
Cheese Products	2.75	0.79 - 5.90
Ice Cream and Frozen Desserts	1.78	0.33 - 4.23
Condensed and Evaporated Products	1.45	0.37 - 2.59

[1]From Bissett, (1978)

[2]ME = Milk Equivalent

TABLE 6 SUMMARY OF RAW WASTE LOADS FROM CANADIAN DAIRY PRODUCTS INDUSTRY[1]

Commodity	BOD kg/1000 kg ME[2]		TSS kg/1000 kg ME[2]	
	Median	Range	Median	Range
Fluid Milk Products	3.8	0.75 - 7.43	1.4	0.59 - 2.42
Butter	1.4	0.53 - 8.78	0.5	0.19 - 1.45
Cheese	5.1	2.12 - 8.48	1.3	0.72 - 2.51
Ice Cream and Frozen Desserts	6.4	0.85 - 21.31	2.4	0.22 - 11.05
Condensed and Evaporated Products	2.2	0.99 - 4.40	0.6	0.08 - 1.40

[1]From Bissett (1978)

[2]ME = Milk Equivalent

TABLE 7 SUMMARY OF AMERICAN DAIRY AND MILK PROCESSING PLANT EFFLUENT CHARACTERISTICS*

Products	No. of Plants	Waste Vol. Coefficient[1]		BOD Coefficient[2]	
		Range	Average	Range	Average
Milk	6	0.1 - 5.4	3.25	0.2 - 7.8	4.2
Cheese	3	1.63 - 5.7	3.14	1.0 - 3.5	2.04
Ice Cream	6	0.8 - 5.6	2.8	1.9 - 20.4	5.76
Cond. Milk	2	1.0 - 3.3	2.1	0.2 - 13.3	7.6
Butter	1	-	0.8	-	0.85
Powder	2	1.5 - 5.9	3.7	0.02 - 4.6	2.27
Cottage Cheese	3	0.8 - 12.4	6.0	1.3 - 71.2[3]	34.0
Cottage Cheese and Milk	19	0.05 - 7.2	1.84	0.7 - 8.6[3]	3.47
Cottage Cheese Ice Cream & Milk	9	1.4 - 3.9	2.52	2.3 - 12.9	6.37
Mixed Products	5	0.8 - 4.6	2.34	0.9 - 6.95	3.09
Overall	56	0.1 - 12.4	2.43	0.2 - 71.2	5.85

[1]Volume: kg wastewater/kg milk (or milk equivalent) processed.

[2]BOD: kg BOD/1000 kg milk (or milk equivalent) processed.

[3]Whey included; whey excluded from all other operations manufacturing cottage cheese.

*From: Harper and Blaisdell (1971)

- recovery of solid material such as nuts, fruit and cheese curd prior to discharge to the sewer system,
- removal of defective containers from bottling lines,
- installation of automatic level control systems on all equipment where overflow might occur,
- use of drip savers for milk can unloading in small plants,
- routine inspection of all lines, valves and pumps to eliminate leakage, especially in CIP lines,
- adequate temperature control in coolers and heaters to prevent freeze-on or burn-on leading to excessive product loss and water consumption during cleaning,
- drip shields provided to prevent spilled products from entering the sewer system,
- adequate entrainment control equipment provided on evaporators equipped with barometric condensers,
- use of post-cleaning rinses as make-up water for sanitizing and/or cleaning,
- elimination of product losses resulting from start-up or changeover shutdown in pasteurizers,
- improvement in efficiency of CIP and sanitizing operations to reduce the required concentration of these materials,
- automatic shut-off valves on case washers to optimize water usage,
- collection of defective ice cream novelties to prevent their discharge to sewer,
- automatic interlock between the air blowdown and CIP systems to ensure that all lines are completely purged prior to cleaning,
- control or collection of leakage from damaged product containers,
- collection and recovery of valuable byproducts, notably whey.

Milk rinsings and whey are the most significant contributions to the overall dairy waste loads. Milk rinsings can be economically recovered, if sufficiently concentrated, by evaporation or by reverse osmosis.

Whey is a valuable byproduct of cheese-making and for this reason alone should be recovered. It can be utilized in food products such as bakery commodities, dry-mix cereals, frozen foods, ice cream and confectionaries. It can also be utilized as a supplement in livestock or poultry feed. Lactose and protein can be recovered by means of reverse osmosis and ultrafiltration. Despite these potential usages, it is estimated that about 44 percent of the 0.6×10^9 kg of whey produced in Ontario in 1972 was disposed of as wastewater.

5.3 Physical Treatment Process Applications

The principal waste constituents of dairy and milk processing effluents are soluble and colloidal organic matter, with the exception of small quantities of fine solids lost in the rinsing of curd during cheese manufacturing. Conventional physical treatment methods such as screening, sedimentation and flotation have little effect on process effluents, although dissolved air flotation has been used to remove fat prior to biological treatment. Centrifugal separators can also be used to remove residual concentrations of curd from whey prior to further treatment or disposal.

In the treatment of whey and concentrated milk rinsings, evaporation and drying are viable alternatives. Studies carried out by the Dairy Research and Development Corporation, as described in Section 12.5, indicate that spray drying of whey is technically and economically feasible. However, the economics of whey drying are strongly influenced by the size of the plant. Considerable equipment development is still required for such applications.

The energy costs associated with evaporation are of considerable concern to the dairy products industry. The combination of energy efficient multi-stage evaporative equipment with increasing market demand for whey powder and other whey products may provide the added incentive required to eliminate the unnecessary discharge of whey.

5.4 Physical-Chemical Treatment Process Applications

Chemical coagulation and precipitation has had few applications for the treatment of dairy and milk processing wastes. Conventional coagulants such as aluminum and iron salts in conjunction with settling or conventional flotation are relatively ineffective and produce voluminous quantities of sludge requiring disposal. The soluble lactose content of the effluent, which contributes significantly to the BOD, is relatively unaffected by these treatment methods.

There have been several potential applications of physical-chemical treatment to whey. These methods have been developed to recover the protein fraction of the whey as a valuable byproduct. Disposal of the lactose fraction is still a problem. Alternate treatment schemes which appear technically feasible include:

- heat coagulation of whey protein after acid addition to pH 5.0,
- protein precipitation with lignosulphonates at low pH,
- protein precipitation with ferripolyphosphate.

The economics of these processes require large scale plants handling in the range of 4000 m^3 of whey per day. The principal market for the recovered protein would be as relatively low value animal feed supplements.

5.5 Advanced Treatment Process Applications

Due to the relatively high value of whey protein and the problems associated with treatment and disposal of whey, advanced treatment processes have been researched

content. Based on present estimates of the market value of the protein, the capital costs of the ion exchange system could be recovered in one year. A more detailed discussion of the process is provided in Section 12.5.

Two major problem areas still face the dairy products industry with respect to whey treatment and utilization. Adequate marketing for the various whey products has always been a problem due to inconsistent quality, competition from other food products and inadequate market research. These problems are gradually being reduced as a result of improved processing techniques and vastly expanded markets in various food products.

The second problem area involves the disposal of lactose resulting from sophisticated whey fractionation schemes. Lactose contributes up to 75 percent of the raw whey BOD. For every pound of protein recovered from whey, up to eight pounds of lactose must be handled. At present, the major usages for lactose are as a sweetener, and as a fermentation source in the production of single cell protein. Increased markets are required for lactose in the food industry.

6 FRUIT AND VEGETABLE PROCESSING

6.1 Processes and Waste Properties

Fruit and vegetable processing covers an extremely diverse range of raw materials and products. In many cases, the processing of a given commodity is seasonal and any one plant will handle a wide range of products, using slightly different processes, and resulting in a wide range of process effluent qualities.

Processing of fruits and vegetables commences with raw material cleaning and preparation. Actual stages will vary depending on the product, but usually include the general steps of cleaning and sorting, trimming, coring and pitting, cutting, peeling and grading. The prepared raw material is then transported to final processing.

In final processing, frozen fruits and vegetables are normally blanched prior to packing and freezing. Canned fruits and vegetables are blanched, pulped, strained and cooked. The production of juices involves extraction of the juice, screening, deoiling, clarification and pasteurization. A process flow sheet illustrating the steps involved in the preparation of canned and frozen fruits and vegetables is given in Figure 21.

The preparation of fruits and vegetables results in large quantities of solid wastes. The percentage of raw material which must be disposed of after processing can vary from 86 percent for corn up to 12 percent for green beans in vegetable processing and 58 percent for grapefruit to 15 percent for cherries in fruit processing. Much of the solid waste is recovered for use as animal feed.

Process wastewaters result from wet transport of raw materials, wastes and products, cleaning operations, trimming, blanching, spillage from filling and sealing machines, wash water for equipment and floor washing. High strength wastes of special concern result from conventional hot water blanching and peeling operations.

Effluent characteristics depend on various factors concerning the product and the processing sequences. These include:

- type of commodity,
- raw product condition in terms of maturity, injury, harvest conditions and weather,
- methods of harvest and transport,
- product style (i.e., whole, peeled, sliced, diced),
- types of process equipment notably for peeling, blanching, grading, etc.,
- water use practices, notably the degree of reuse, product-water contact time, etc.,
- percentage of plant capacity in operation,
- housekeeping practices in terms of cleanup methods, amount of spillage, etc.

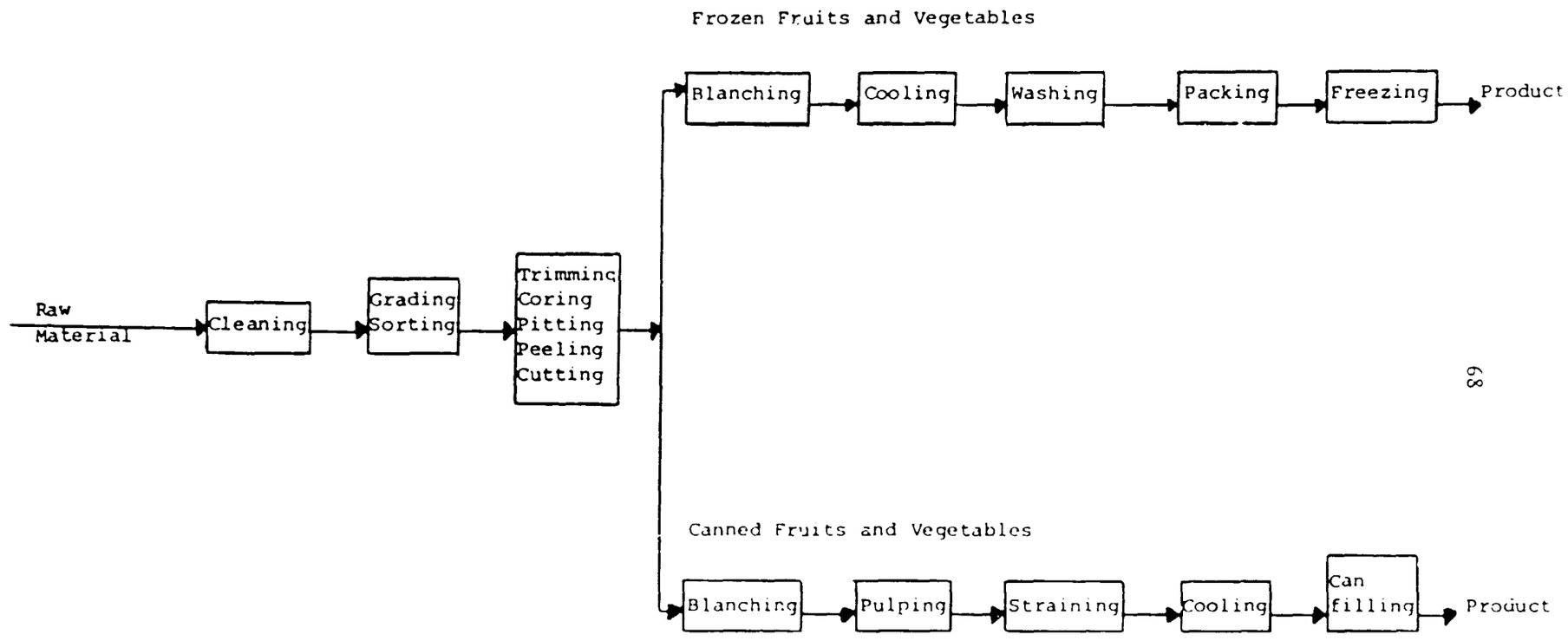

FIGURE 21 PROCESS FLOWSHEET FOR PREPARATION OF CANNED AND FROZEN FRUITS AND VEGETABLES

Wastes are characteristically high in suspended solids and dissolved and colloidal organic matter which exhibits a high BOD. Obviously, the major factor affecting waste characteristics is the commodity. In Table 8, characteristics of wastewaters resulting from the processing of selected fruits and vegetables are summarized. The variation in water usage and process effluent quality between various products is evident.

TABLE 8 WASTE CHARACTERISTICS FOR SELECTED COMMODITIES IN THE FRUIT AND VEGETABLE INDUSTRY

Commodity	Water Usage (m^3/t)	BOD (kg/t)	Suspended Solids (kg/t)
Corn[1]	6.73	12.8	4.19
Beets[1]	7.57	28.1	9.62
Peas[1]	23.7	19.2	5.40
Cherries[1]	12.8	13.6	0.86
Plums[1]	4.1	4.4	0.34
Green Beans[1]	14.2	3.2	2.57
Peaches[1]	12.5	15.5	4.3
Tomatoes[1]	9.2	4.7	6.17
Apple Juice and Apple Products[1]	2.78	2.0	0.28
Potatoes[2]	15	27	30

[1]Stanley Assoc. Eng. (1977).
[2]Stephenson and Guo (1977).

6.2 Water and Waste Management

The National Food Processors Association (formerly National Canners Association; NCA) and the United States Department of Agriculture (U.S. DA) have been extensively involved in evaluating in-plant methods of reducing water usage and recovering waste materials from fruit and vegetable processing operations. The majority of published information on in-plant water and waste management comes from these two sources. Some of the in-plant modifications directly applicable to the fruit and vegetable industry are discussed in the following subsections.

6.2.1 Material Transport. Raw material and product fluming systems are ideally suited for water reuse. Flumes for transporting raw material do not require fresh water.

Although partially processed materials should be flumed in water of good quality, water can be recirculated in these systems provided that adequate make-up water is supplied to maintain sanitary conditions. Bacterial growth in reuse systems can be controlled by chlorination or pH adjustment with citric acid to 4.0 or less.

Considerably more savings in water can be realized by using dry conveyance methods wherever possible for transporting raw materials, solid wastes and finished products. Mechanical conveying systems are widely used. Pneumatic systems, which convey materials by negative or positive air pressure, are relatively new developments, but have been successfully used for peas, green beans, cut corn, lima beans and carrots. Hydraulic conveyance systems have advantages in terms of sanitation, washing, gentle product handling and lower space requirements. These must be balanced against the cost of water and waste treatment. However, for many final products, hydraulic transport is the only alternative. In these cases, the duration of water/solid contact should be minimized as much as possible to reduce leaching of organic matter into the flume water. For solid waste handling, dry conveyance can significantly reduce water usage and waste loads.

6.2.2 Product Washing. Water is required in fruit and vegetable processing for washing of raw and finished products. However, there are methods to reduce water usage while maintaining product quality.

In spray washers, nozzles should be selected and installed to deliver small volumes of water at high pressure only to the area where product is present. Overlap of spray patterns should be minimized. Water from the final product washers can often be reused in the raw material washers after screening or filtration to prevent plugging of the spray nozzles. Washers should be shut down when no product is being washed.

The efficiency of flood washers can be improved by the use of sprays to rinse the product as it is removed. Rinse water from the spray system can be used in the flood washer. By this modification, the make-up requirements of the flood washer can be reduced as the product receives a final rinse to remove residual contaminants built-up in the flood washer water.

Reel and brush washers require proper selection of nozzles to minimize water use while maximizing washing efficiency.

In all washers, warm water and detergents improve washing efficiency. However, due to spoilage and contamination of product, these cannot always be used.

In washing tomatoes, the Magnuscrubber used for dry caustic peeling has been used to remove tightly adhering smear soil from the fruit with insignificant water

consumption. The dirt is removed by rotating soft rubber discs. The system might also be applicable to cleaning of other materials. The disadvantage of the system is the higher energy requirements relative to conventional water-intensive washing.

Initial dry cleaning of the raw material should be used wherever feasible, including leafy green vegetables, root crops and corn. The majority of sand, dirt, leaves, husks and stems can be removed by vibrating screens, roller conveyors and air cleaners prior to washing.

6.2.3 Peeling. Steam peelers used for root vegetables and conventional chemical peelers used for fruits and vegetables produce a high volume, highly concentrated waste stream due to the solubilization of juices and finely divided particulate matter in the discharge. There are few modifications which can be made to this equipment to reduce the waste load.

Mechanical peelers used for fruits such as apples and pears are commonly designed to separate the peeled fruit from the particulate waste material. Dry conveyance of the solid waste away from the peelers will eliminate leaching of organic material into the effluent stream. Dry transport also facilitates recovery of peels and cores as byproducts.

In abrasive peelers used for root crops, pollutant loadings depend on the quantity of water used in the machines. If water consumption is minimized, the concentrated slurry of waste materials can be collected separately for byproduct recovery. Separate collection and handling will prevent this concentrated organic waste from entering the sewer system.

Dry caustic peelers have been shown to be effective on root crops such as potatoes, beets and carrots as well as fruit such as peaches, tomatoes, apricots and pears. The mechanical energy of rotating rubber rollers is used to abrade the peel after immersion of the product in caustic solutions. The peel is collected as a concentrated alkaline slurry which may be disposed of by landfill if acceptable to local authorities. Alternately, the slurry can be thickened by settling, or centrifugation to recover the alkali solution and reduce the disposal costs of the solid wastes. Some peeling residuals can be used as animal feed supplements after neutralization. There have also been successful demonstration of recovering tomato peel residuals as a food material.

The following data illustrate the potential reduction in water usage and waste generation possible using dry caustic peeling on two commodities, beets and cling peaches.

I. Dry Caustic Peeling of Beets (72.6 metric tons/day)*

		Conventional	Dry Caustic
Water Usage	(m^3/day)	182	45
Total Solids	(kg/day)	4630	477
BOD	(kg/day)	1212	86

*from Lee et al (1973)

II. Dry Caustic Peeling of Cling Peaches**

		Conventional	Dry Caustic
Water Usage	(L/kg)	3.5	0.44
BOD	(kg/ton)	2.8	1.1
Suspended Solids	(kg/ton)	2.1	0.8

**from Stone (1974)

For durable root crops, studded rubber rollers are used for peel removal. For more fragile fruits, rotating rubber discs are used. For difficult to peel commodities such as potatoes, infra-red heat is applied after caustic immersion to loosen the skin and improve peel removal efficiency.

6.2.4 Blanching. Conventional hot water blanching utilizes large volumes of water and results in a significant fraction of the total process effluent. While conventional steam blanching can reduce effluent loads, long exposures to the steam are necessary and can result in considerable product deterioration. Several alternative systems have been demonstrated to reduce water and waste loadings while maintaining product quality.

Hot gas blanching, using hot combusted furnace off-gases, has been demonstrated by the National Canners Association. Steam is added to the gas stream to improve heat transfer efficiency and prevent product dehydration. The relative economics of energy costs and water and wastewater treatment costs determine the feasibility of commercial application of the process as, technically, hot gas blanching has been well proven with a wide variety of commodities. As yet, no commercial hot gas blanching equipment has been constructed although several equipment suppliers in the United States

have shown interest. The potential reductions in waste loadings relative to conventional blanching are demonstrated by the following data (Ralls and Mercer, 1974):

	Percent Reduction		
Commodity	Water Usage	BOD	SS
Green Beans	94.2	91.4	93.0
Corn-on-the-Cob	33.3	28.8	18.7
Red Beets	(+2.2)	47.5	37.0
Spinach	99.9	99.8	99.5

Another well-tested blanching technique is the "Individual Quick Blanch" (IQB), developed by the U.S. DA, which involves a two-step procedure. A thin layer of product is passed through the heating zone and then held in a deep bed for the time required to achieve uniform blanching. The process appears to be more applicable to freezing or dehydration than canning.

Significant water and waste load reductions have been demonstrated with no effect on product quality. Agriculture Canada have indicated that the process has been developed to the point where it is commercially marketable.

The vibrating blancher cooler combines the principles of IQB with a vibrating cooler which uses the steam condensate as a fog spray to cool the product prior to freezing. This eliminates the water usage associated with flume cooling in conventional blanching systems. There are still problems associated with reduced product yields with some commodities. However, water requirements are only one percent of conventional systems.

Microwave blanching systems have been briefly evaluated but high energy requirements and equipment costs limit the feasibility. Agriculture Canada have done pilot-scale testing of a recirculation steam blancher which concentrates blancher effluent in a rising film evaportor and reuses the evaporator steam in the blancher. Blancher effluent is concentrated to 70 percent total solids for disposal or use as an animal feed supplement. Larger scale testing is planned to document the economics.

6.2.5 Pickling. Several methods have been evaluated to recondition and reuse brine solutions from pickling and cherry processing operations. These techniques could

potentially eliminate the discharge of these concentrated wastes and reduce salt requirements in processing. The economics of these alternatives are such that a careful examination of the site-specific costs of chemicals and disposal are required. However, studies have shown that the reconditioned brines can be reused with no loss of product quality. Alternative schemes include:

- treatment with activated carbon and calcium carbonate,
- ion exchange,
- activated carbon adsorption,
- submerged combustion evaporation,
- caustic precipitation,
- filtration, activated carbon adsorption and treatment with SO_2 and lime,
- heat treatment.

6.2.6 Water Recirculation Systems. Several processes in the fruit and vegetable industry lend themselves to closed-loop recirculation of water, which can result in significant savings in consumption. Water usage can be reduced to the amount required to maintain volume requirements and sanitary conditions.

Container cooling water can be reused following chlorination or pH adjustment to prevent bacterial contamination and screening to remove gross solids. Cooling towers successfully reduce the temperature of the cooling water prior to reuse. Similar procedures can be used with compressor cooling water. In this case, chlorination is required only to control cooling tower growth as there is no water-product contact. If entrainment in barometric condensers is controlled, condenser water can also be reused following cooling.

6.2.7 Multiple Reuse Systems. Countercurrent or cascade multiple reuse systems can significantly reduce process water usage. Reuse of water can be maximized by designating water requirements according to the quality of water required for each operation and designing the water supply system accordingly. The water flow pattern is countercurrent to the product flow. Fresh water is used in the final processing stages and the sequentially more contaminated water is returned for transporting blanched product, conveying and washing product between the dump tank and blancher and washing the raw material as it enters the process from the field. Chlorination, screening for coarse solids removal, and fresh water make-up may be required between stages in the process. Careful control of such systems is essential to prevent product or equipment contamination. However, in a well-designed multiple reuse system, total water consumption can be

reduced by as much as 50 percent depending on the individual processing steps. In some instances, energy savings can also be realized by segregation and appropriate reuse of hot and cold water streams.

As unit water requirements vary significantly between processing plants, individual systems are required in each installation. Careful review of the particular process can often indicate areas of potential multiple water reuse with the resultant advantages in consumption.

6.2.8 Plant Cleanup. As in any processing operation, dry cleanup is the most advantageous method to reduce waste loads and water usage. Following dry sweeping, high pressure water systems should be used for the final cleaning procedure.

6.2.9 Miscellaneous Methods. Decentralized fruit and vegetable processing in which the initial processing steps are performed at or near the point of harvest has been advocated for commodities such as tomatoes. The wastes could be conveniently returned directly to the harvested fields. This type of processing would be a long term development as it is radically different from conventional, accepted practices.

In all fruit and vegetable operations, solid residuals should be recovered as by-products. If transported wet, they should be removed from the water stream as quickly as possible by suitably located equipment to minimize leaching into the liquid phase.

6.3 Physical Treatment Process Applications

6.3.1 Screening. Wastewaters from the fruit and vegetable industry contain considerable quantities of solid waste materials. Screening is the most commonly applied pretreatment process. Almost all canneries use screens to remove and/or recover materials such as pits, seeds, trimmings and rejects.

All the screens described in Section 2.1.2 have been applied in fruit and vegetable operations to provide pretreatment to process effluents. As in any screening application, the actual removal efficiency of the screen will depend on the nature of the solids, the mesh size, the solids and hydraulic loading of the screen and the screen design. Typically, a well-designed installation will remove 20 to 30 percent of the suspended solids and up to 90 percent of the settleable solids. However, BOD reductions are usually relatively low.

The location of the screen is very important. Extended liquid-solid contact time will result in leaching of juices into the aqueous phase and proportionate increases in the soluble BOD content. Screens should be located to remove solids as quickly as possible from the wastewater. Pumping should be avoided as much as possible as this also increases the rate of solubilization and reduces the particle size of the suspended matter.

6.3.2 Hydrocyclones. Cyclones are applicable to the recovery of dense particulate matter such as sand and grit, seeds, twigs and other materials commonly present in fruit and vegetable flume and wash water. In such applications, hydrocyclones offer substantial advantages in terms of cost and space requirements over clarifiers or screens. However, abrasion can be a problem in such systems and they are susceptible to hydraulic loading variations. Solids are recovered as a dilute mud which may require further thickening prior to disposal. Cyclones, in general, are not effective for separation of low density particulate matter which is susceptible to shearing.

Another area of application of hydrocyclones is the removal and recovery of potato starch from potato slicing effluents. The hydrocyclone can be used as the primary separation device or to thicken the slurry recovered from inclined screens.

6.3.3 Gravity Clarification. With the exception of potato processing operations, gravity clarification is not commonly applied in fruit and vegetable processing. In most instances, screening can remove the majority of settleable solids at significantly lower cost.

The efficiency of clarifiers in fruit and vegetable applications depends on the commodity, but 40 percent reduction suspended solids and 15 to 30 percent reduction in BOD are typical in most cases. ' 'mentation can be more effective if applied to pretreat concentrated waste streams such as flume water prior to dilution. In such applications, the presence of heavy soil material and grit may require special design considerations. This material can be highly abrasive to pumps and scraper mechanisms and can thicken to high solid concentrations, making pumping difficult.

In potato processing, sedimentation has been more effectively used as a pretreatment and solids recovery process. Suspended solids removal efficiency of 50 to 90 percent can be attained at hydraulic loadings of approximately 30 $m^3/m^2/day$. BOD removal efficiency is typically in the range of 25 to 50 percent. The settled sludge is suitable as an animal feed. If properly designed and equipped with scum removal mechanisms, clarifiers can also effectively remove oil discharged from frying operations.

Due to the nature of the suspended matter in food processing effluents, tube and inclined plate separators have not been widely applied for solid separation. However, starch from such operations as potato chip slicing can be effectively removed with such units. Tube and inclined plate separators offer considerable advantage in terms of space requirements as they operate effectively at significantly higher hydraulic loadings than conventional clarifiers. Solids accumulation on the tubes or plates can be a problem. The

equipment should be thoroughly tested for the particular waste stream to be treated to ensure efficient full-scale operation.

6.3.4 Flotation. Although flotation, particularly in the dissolved air operating mode, has been thoroughly evaluated from the treatment of various fruit and vegetable processing effluents, there have been few full-scale installations. Heavy non-flocculant soil particles in the waste streams are more readily removed by screening or clarification.

Air flotation has been proposed for the removal of starch and other particulate matter from potato processing wastes. However, flotation efficiency is only marginally better than sedimentation and the process is considerably more expensive to operate.

Grease and oil from various cooking and canning operations could be recovered by air flotation; however, this material can normally be separated by gravity clarifiers or grease traps more economically.

6.3.5 Filtration. The principal application of filtration in fruit and vegetable processing has been for dewatering sludges from gravity clarifiers for use as an animal feed or to reduce disposal costs. Vacuum drum filters are most commonly used, particularly in potato processing operations where loadings in the range of 1 kg solids per square metre of filter area per hour are typical. Such sludge dewatering equipment has also been studied for recovery of skin and pulp from concentrated waste streams such as caustic peeling solutions. The caustic can be reused after treatment, reducing chemical costs for processing.

Filtration of process waste streams such as potato slicing water has been successful using sand filters, dual media gravity and pressure filters and the U.S. DA Uniflow filter. If adequate fresh water make-up is provided to control the accumulation of inorganic salts such as sodium, phosphorus and chloride, reuse of the filtered water may be feasible. Efficient operation of the filter in such applications depends on the solid content of the waste stream. High suspended solids concentration reduce the length of the filtration runs. Backwash water containing the solids removed from the waste stream in the filter must still be treated by sedimentation or screening.

More commonly, sand and multi-media filters have been used to upgrade biologically-treated process wastes for discharge to the receiving waters or recycle to the process. In well-operated biological treatment systems in which suspended solids losses from the secondary clarifier are low, filtration can produce a high quality effluent. An example of such an installation is described in Section 11.4. Filtered, chlorinated process water after biological treatment can be reused in many areas of the plant.

6.3.2 Hydrocyclones. Cyclones are applicable to the recovery of dense particulate matter such as sand and grit, seeds, twigs and other materials commonly present in fruit and vegetable flume and wash water. In such applications, hydrocyclones offer substantial advantages in terms of cost and space requirements over clarifiers or screens. However, abrasion can be a problem in such systems and they are susceptible to hydraulic loading variations. Solids are recovered as a dilute mud which may require further thickening prior to disposal. Cyclones, in general, are not effective for separation of low density particulate matter which is susceptible to shearing.

Another area of application of hydrocyclones is the removal and recovery of potato starch from potato slicing effluents. The hydrocyclone can be used as the primary separation device or to thicken the slurry recovered from inclined screens.

6.3.3 Gravity Clarification. With the exception of potato processing operations, gravity clarification is not commonly applied in fruit and vegetable processing. In most instances, screening can remove the majority of settleable solids at significantly lower cost.

The efficiency of clarifiers in fruit and vegetable applications depends on the commodity, but 40 percent reduction suspended solids and 15 to 30 percent reduction in BOD are typical in most cases. ' 'mentation can be more effective if applied to pretreat concentrated waste streams such as flume water prior to dilution. In such applications, the presence of heavy soil material and grit may require special design considerations. This material can be highly abrasive to pumps and scraper mechanisms and can thicken to high solid concentrations, making pumping difficult.

In potato processing, sedimentation has been more effectively used as a pretreatment and solids recovery process. Suspended solids removal efficiency of 50 to 90 percent can be attained at hydraulic loadings of approximately 30 $m^3/m^2/day$. BOD removal efficiency is typically in the range of 25 to 50 percent. The settled sludge is suitable as an animal feed. If properly designed and equipped with scum removal mechanisms, clarifiers can also effectively remove oil discharged from frying operations.

Due to the nature of the suspended matter in food processing effluents, tube and inclined plate separators have not been widely applied for solid separation. However, starch from such operations as potato chip slicing can be effectively removed with such units. Tube and inclined plate separators offer considerable advantage in terms of space requirements as they operate effectively at significantly higher hydraulic loadings than conventional clarifiers. Solids accumulation on the tubes or plates can be a problem. The

6.3.6 Centrifugation. Centrifugation has had a few applications in the treatment of fruit and vegetable processing wastes. Processors tend to favour filters for sludge dewatering. Potato and cornstarch are typically removed from the aqueous stream by centrifugation. Secondary centrifugation prior to discharge of the effluent can significantly reduce process losses and waste loading.

6.3.7 Evaporation. There are few waste streams in fruit and vegetable processing that contain byproducts valuable enough to warrant recovery by evaporation. Potato starch may be the exception. American studies have shown that triple effect evaporation of potato starch plant effluents to recover a concentrated animal feed can provide a net return on investment. The cost implications should be carefully evaluated with particular attention to the effect of inflation in energy costs. Two American potato processors presently dry and market potato wastes as cattle feed.

Submerged combustion evaporation was proposed in the early 1970's as an alternative to conventional evaporation. The process appeared to have advantages for recovery of brines and concentrated liquors as there were no scale problems and no heat exchange surfaces to foul. However, submerged combustion evaporation is much less energy efficient than multi-stage evaporation. As a result of increased energy costs in recent years, commercial application of the process has been limited.

6.4 Physical-Chemical Treatment Process Applications

Chemical coagulation and precipitation have had limited full-scale application to fruit and vegetable wastes due to the relatively high dosages required for effective treatment and the large volume of sludge produced. There has been considerable laboratory and pilot-scale work done, however, which indicates that physical-chemical alternatives could have application for pretreatment prior to discharge to municipal sewer systems.

Most of the conventional metal coagulants, such as lime, alum and ferric chloride and various organic polyelectrolytes have been evaluated in conjunction with sedimentation, flotation and centrifugation. The removal efficiency depends on the chemical used and the applied dosage, as well as the characteristics of the waste. Suspended solids removals can normally be increased to the range of 60 to 80 percent with chemical coagulation and sedimentation. However, fruit and vegetable wastes typically contain high soluble organic concentrations which are unaffected by conventional coagulants. As a result, BOD removal efficiency is normally less than 50 percent.

In general, chemical coagulation systems are difficult to operate efficiently and require close control to maintain good performance on fruit and vegetable wastes. Chemical requirements can vary widely due to changes in the commodities being processed in the plant and normal variations in process effluent quality. Furthermore, the presence of chemical coagulants in the recovered solids may limit the use of this material as an animal feed byproduct. In this case, disposal costs will be high. Physical-chemical alternatives are more feasible for the treatment of concentrated wastes which are not amenable to biological treatment such as pickling brines and caustic peeling solutions.

One signific ..rea of application of physical-chemical treatment processes is the recovery of protein from potato juices resulting from the production of potato starch. The process involves pH adjustment to the range of 4.7 to 5.6 with sulphur dioxide followed by heat coagulation with direct steam injection. The heat coagulated protein can be separated by centrifugation or filtration and dried. The product is primarily used as an animal feed as it has some undesirable taste characteristics, which would require further treatment. This protein recovery scheme is economically feasible in Europe and full-scale plants are in operation in Holland, Japan, Germany, Austria and Romania. However, evaluations of the process in the United States indicate that the economics are not favourable at present due to the low market value of the protein as an animal feed.

6.5 Advanced Treatment Process Applications

In the treatment of fruit and vegetable wastes, as in other food processing industries, advanced treatment alternatives are economically feasible only if applied to a concentrated waste stream from which a marketable byproduct or reusable raw material can be recovered. Several advanced treatment methods have been evaluated for fruit and vegetable wastes but there have been few full-scale installations.

Both activated carbon adsorption and ion exchange have been used to recondition brines for reuse in pilot-scale studies. However, the economics of both applications are such that large quantities of brine would have to be treated to justify the expense. In areas of a high concentration of pickling operations, a centrally located treatment plant might be feasible.

As in the application of physical-chemical treatment, advanced technologies have been primarily investigated for the recovery of protein and starch in potato and corn processing. Both ultrafiltration and reverse osmosis have potential in these areas.

The possibilities of using ultrafiltration for separation of protein from starch processing effluents is technically feasible and two full-scale plants in Europe are using

this technology. By this method, the protein concentration can be significantly increased, reducing the costs of subsequent processing, and lower molecular weight components such as sugars are separated from the final product. However, heat coagulation of the protein concentrate is still desirable to improve the digestibility of the product. The relative economics of reduced equipment size for coagulation of the protein must be evaluated relative to the capital and operating costs associated with ultrafiltration. Energy savings can be realized by preconcentration due to the reduced volume of juice requiring heat coagulation.

Reverse osmosis has been evaluated as a concentration method for corn starch and potato starch effluents. Four-fold concentrations can be attained and the permeate organic content is normally less than ten percent of the original waste strength.

There are still operational problems associated with these membrane technologies. Capital and operating costs are high. Unless a market can be found for the separated proteins and carbohydrates, membrane processes are not economically attractive at present for such applications.

7 BEVERAGE INDUSTRY

7.1 Processes and Waste Properties

The beverage industry includes breweries, distilleries, wineries and soft-drink producers. As the processes involved and waste characteristics of each segment of the beverage industry are different, each subcategory is discussed separately.

7.1.1 Breweries. The brewing of beer is basically a batch process. Cereal grains are cooked to solubilize starches and mixed with malt produced from barley. The resultant cooked mash is filtered to remove spent grains. The clear liquor (wort) is mixed with hops in the brew kettle and boiled to coagulate protein (trub). The hops and trub are removed and the liquid phase fermented to produce carbon dioxide and alcohol. Excess yeast is removed by filtration and the product is aged under pressure to produce the desired carbonation, refiltered and packaged for marketing. A schematic flowsheet of the brewing process is shown in Figure 22.

Brewing effluents are typically high in BOD, but low in nutrients such as nitrogen and phosphorus. There is little published information on effluent loading from Canadian breweries. Average values in the American industry are as follows (Joyce et al, 1977):

Volume:	6.9 m^3/m^3 beer
BOD:	10.4 kg/m^3 beer
Suspended Solids:	4.2 kg/m^3 beer

Principal water usage is for cooling. The major sources of wastewater are from washing of bottles and equipment such as kettles and cookers, screen and press liquors, and losses of hops, yeast, trub and beer during transfer operations. If the brewery operates its own malt house, this can significantly increase the process effluent waste load.

7.1.2 Distilleries. Distilleries can be subdivided into grain distilleries, which produce primarily whiskey, and rum distilleries. Grain distilleries are of principle importance in Canada.

In the distilling process, the grains are cooked to produce mash, cooled, mixed with malt and fermented with yeast to produce alcohol. The fermented mash is distilled and the condensate collected as product for storage and filtration prior to bottling. The high strength residue from the still (stillage or still bottoms) is screened and a fraction of

148

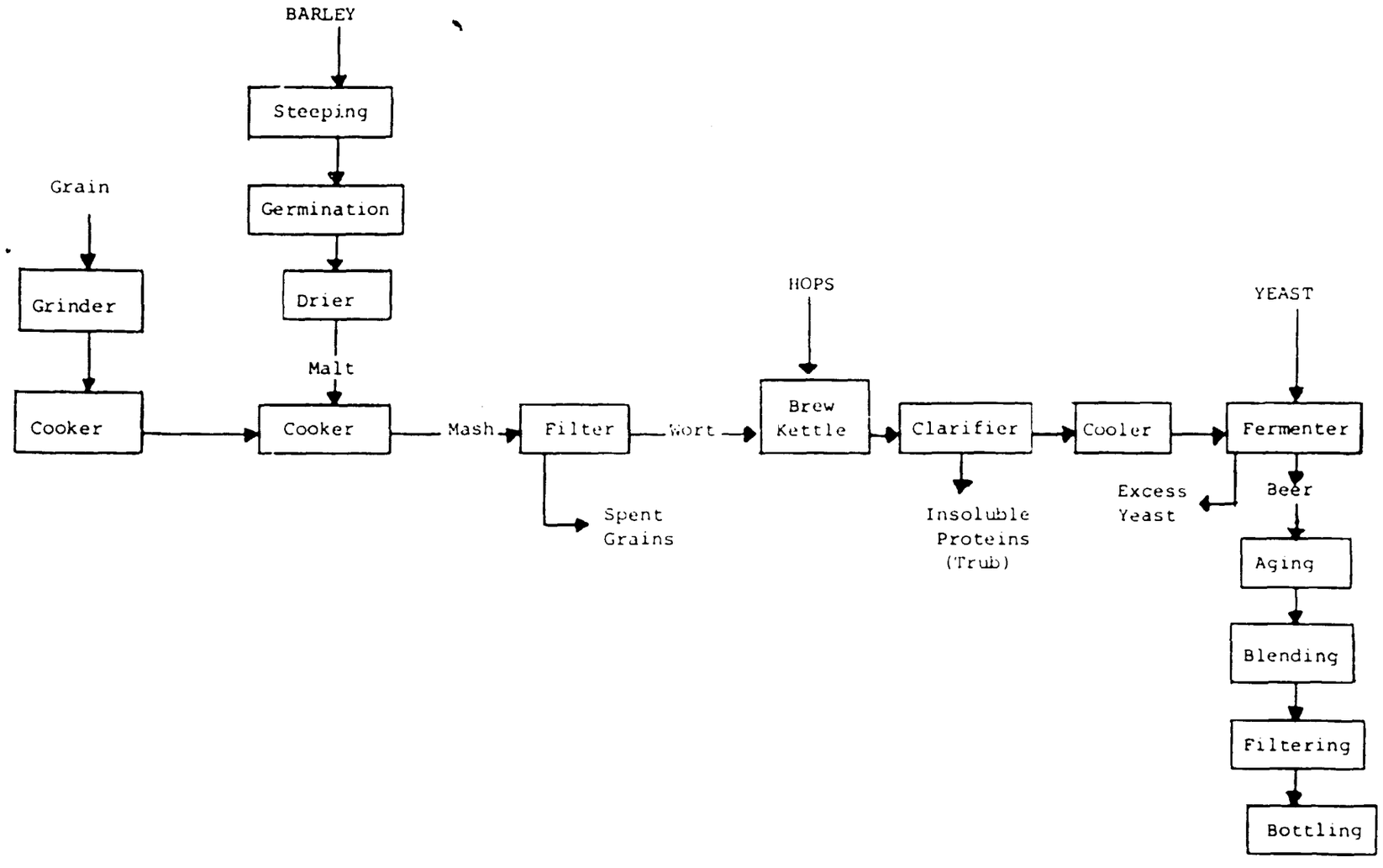

FIGURE 22 FLOWSHEET OF THE BREWING PROCESS

the liquid returned to the fermenters. Solid material from the stillage is normally dried to produce distiller's light grains. The concentrated liquid is evaporated to produce distiller's dark grains. These grains are sold as animal feed. A schematic of the grain distilling process is shown in Figure 23.

The major water use in distilleries is in cooling and condensing. Wastewater results primarily from washing of equipment and spills during bottling and material handling operations. If stillage is not recovered, this results in a high strength effluent as this material may contain up to 25 000 mg/L BOD and 4 to 6 percent solids.

7.1.3 Wineries. In the production of wine, grapes are crushed and stemmed prior to fermentation. For white wines, the juice is separated and the skins and seeds (pomace) are discarded. For red wines, these materials are separated after fermentation. The fermented product is racked, filtered, fined and bottled after aging.

Brandy can be produced from discarded wine, lees or pomace as a fortifying spirit. Beverage brandy is normally produced by distillation of wine. As in the production of distilled grain liquors, a concentrated stillage is produced which must be disposed of.

In wine production, the principle source of wastewater during the crushing season results from washing of presses. Pomace must also be handled. After fermentation, lees are the principal wastewater problem. The lees are basically a liquid slurry of settled yeast cells which contain 5 to 13 percent alcohol and 24 to 28 g/L tartrates. In the production of brandy, stillage is the most serious wastewater problem. The characteristics of the stillage depend on the type of still and the source of the distilling material (wine, pomace, lees). These are all high strength wastes with BOD concentrations ranging from 8000 to 12 000 mg/L. An average still produces 20 litres of stillage per liter of brandy.

7.1.4 Soft Drink Bottling. The production of soft drinks is principally a blending and bottling operation. Sugar, flavour, acid, water and carbon dioxide are mixed to produce the final product. A schematic flowsheet of the process is shown in Figure 24.

The principle source of waste material is spillage during the bottling or canning operation. Bottle washing operations can also generate large volumes of hot alkaline wastewater. Cleaning of flavour and syrup tanks also contributes to the waste load In the United States, average wastewater generation is 5.3 m^3 per m^3 of beverage and the average BOD discharge is 1.2 kg BOD/m^3 (Joyce et al, 1977).

7.2 Water and Waste Management

The beverage industry, particularly the brewing and distilling segments, has a relatively good record in utilization of waste materials. Solid wastes and concentrated

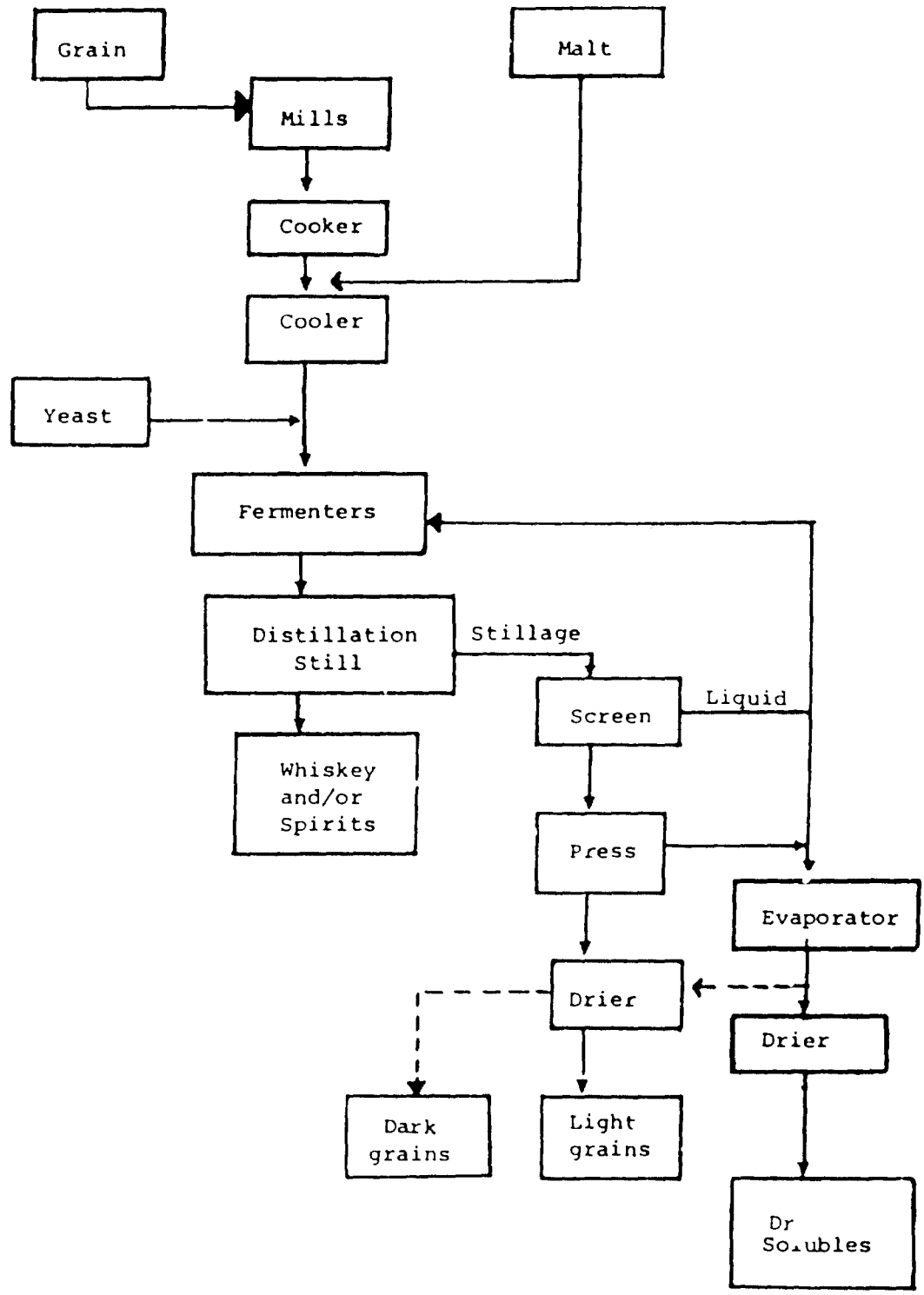

FIGURE 23 FLOWSHEET OF THE DISTILLING PROCESS

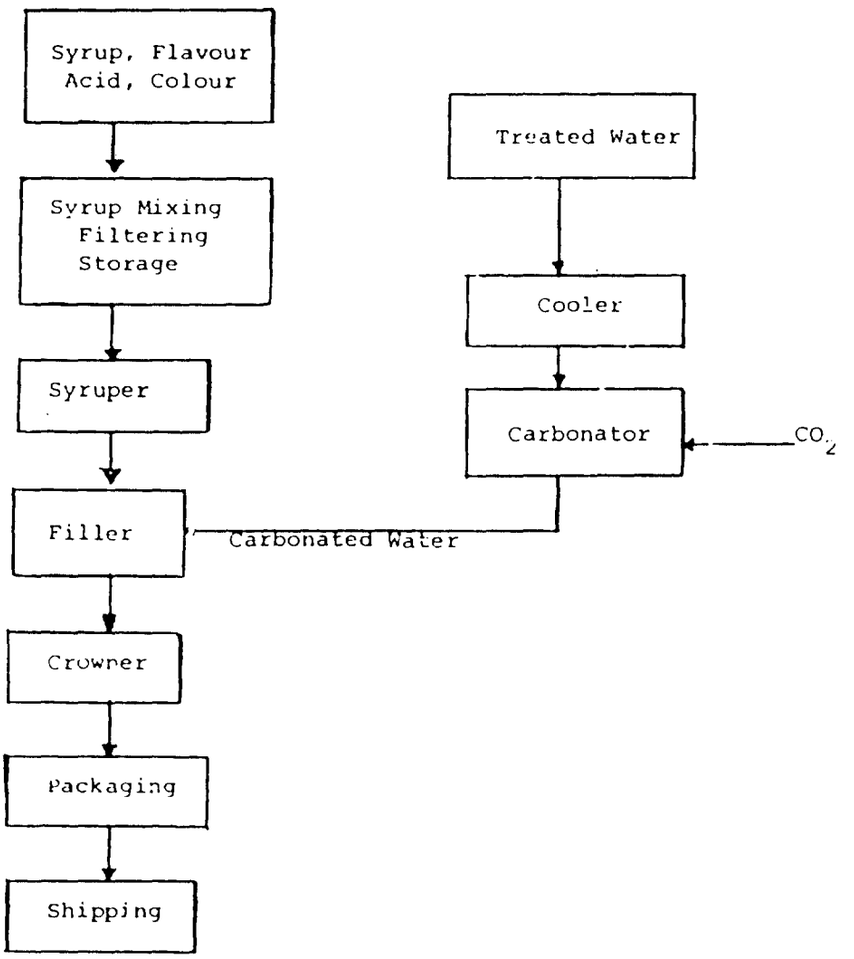

FIGURE 24 FLOWSHEET OF SOFT DRINK BOTTLING PROCESS

liquid wastes are normally recovered as feed materials. However, there are means available to further reduce water use and effluent strength.

7.2.1 **Breweries.** Washing refillable bottles in a brewery requires considerable amounts of caustic and water. Many large breweries recycle the cleaning solutions resulting in significant chemical cost savings and waste reduction.

Some brewery wastes can be returned to the brewhouse without affecting the quality of the beer. Press liquor from spent hops and spent grains contain valuable fermentable sugars which can be recovered while reducing the process effluent loads.

Spillage should be reduced to a minimum by smooth operation of bottling lines to avoid overfilling. Packaging wastewater is relatively weak but represents a significant fraction of the total flow. Consideration should be given to treating and reusing this water at the bottling lines.

Wastes from the brewing process should be recovered as animal feed materials. This includes grains, hops, trub, yeast, press liquors and waste beer. Most breweries recover spent grains. Plate and frame filters are more effective, in terms of water use, than lauter tub filters for this recovery. All of the waste materials are amenable to recovery and marketing.

7.2.2 **Distilleries.** In grain distilleries, the major step in reducing waste loads is the recovery of stillage. Most large distillers operate a "dry house" to recover spent grains as animal feed. As the dried grain contains fat, fiber, protein, carbohydrates and minerals, it is an excellent livestock and poultry feed.

7.2.3 **Wineries.** As wineries produce the majority of their wastewater during the extremely short pressing season, the effluents can be extremely difficult to handle in municipal treatment plants.

Basic water conservation programs such as described in Section 3 are essential. Condenser and cooling water should be recycled.

Tartrate recovery may be economical. Winery wastes are the world's major source of tartrates. Pomace can contain up to 16 percent tartrate. Stillage, lees and argols are also excellent sources. Recovery of tartrate can reduce the BOD of these wastes by 50 to 75 percent.

Grape pomace should be returned to the fields as a soil conditioner and fertilizer. Alternately, it can be sold as an animal feed additive. The economics of recovering grape seed oil from the seed fraction of the pomace should also be considered. This is common practice in Europe.

7.2.4 **Soft Drink Bottling.** Careful control of water use in soft drink operations can significantly reduce water usage and waste loads. Bottling lines in particular should be carefully controlled to minimize spillage.

Washing of returnable bottles is a major source of wastewater. It is ironic that plants using non-returnable containers and air cleaning prior to filling discharge minimal wastewater volumes at strengths significantly lower than plants using returnable containers.

7.3 Physical Treatment Process Applications

As process effluents from the beverage industry are readily biodegradable, biological treatment processes have been most widely applied except for the physical recovery of such materials as spent grains, excess yeast, spilled product, waste filter aid and stillage. The recovery of these materials involves a combination of screening, settling or filtration, evaporative concentration and drying.

Most grain distilleries operate a "dry house" to recover stillage. The concentrated waste is screened and the recovered solids pressed and dried for marketing as distiller's light grains. The liquid stream from the screening and pressing is concentrated in multiple effect evaporators to 20 to 30 percent solids and dried for marketing as distiller's dry solubles. Alternately, it can be mixed with the light grains before drying to produce distiller's dark grains. Similar recovery operations are possible in breweries to recover spent grains, hops, trub, yeast, press liquors and waste beer. A comprehensive byproduct recovery operation is described in Section 11.5.

Physical treatment methods have been evaluated with only limited success for wine stillage. Due to the high solid concentration in this waste stream, it is not, in general, amenable to gravity sedimentation. However, centrifugation can be effectively used to reduce the volume of sludge requiring disposal. Although the centrate from the centrifuge will still contain high concentrations of solids and BOD, it is more amenable to further treatment by sedimentation.

In breweries, distilleries and wineries where a combined process effluent stream is discharged, pretreatment to remove residual solids is normally practiced. Gravity clarifiers are commonly used. The settled material can sometimes be recovered as an animal feed. However, it is emphasized that recovery of solid wastes from concentrated streams prior to discharge is generally more effective and more economical than treatment of the total process effluent.

154

The beverage industry requires a very high quality water for the product. There are, however, some operations that could use lower quality water, such as floor and equipment washing. Sand filtration of biologically treated process effluent can produce water of adequate quality for these operations. If this is considered, it is important that a separate low-grade water distribution system be used to ensure that product water and reclaimed water are not mixed.

7.4 Physical-Chemical Treatment Process Application

One of the principal areas of investigation of physical-chemical treatment processes has been for the recovery of tartrates from wine stillage. The recovery process involves the addition of lime and calcium chloride to convert soluble potassium bitartrate to insoluble calcium tartrate. Separation of the precipitated tartrate from the stillage solids is a major problem. Research indicates that detartration is more effective after centrifugation of the stillage to remove the majority of the solids. The subsequent detartration process removes between 50 and 80 percent of the residual stillage BOD. In general, the recovery of tartrate is only economical at large wineries where a significant return on the recovered tartrate can be realized. However, the disposal problems associated with stillage can justify the costs of tartrate recovery in some areas.

Physical-chemical methods do not, in general, improve the settling properties of stillage. However, if the majority of the solids are removed by centrifugation, the centrate can be chemically treated by conventional coagulants such as lime and organic polymers.

Chemical coagulants have not been studied to any great extent for treatment of total process effluents from the beverage industry. The process is, in general, uneconomical due to the large volumes of sludge produced.

7.5 Advanced Treatment Process Applications

The only significant full-scale application of advanced treatment technologies for treatment of beverage industry wastewater is the recent installation of a three-stage reverse osmosis system for the removal of dextrose from the effluent of a soft drink bottling line. The system is designed to reduce the effluent BOD to less than 50 mg/L by recovery of the sugar from the wastewater.

In general, there has been little work done in the area of advanced treatment. Ion exchange has been proposed for recovery of tartrates from winery wastes. Ultrafiltration has been proposed to recover proteins from steep liquor produced during malting operations. However, application of these technologies in full-scale operations is well in the future.

Process water quality necessary for the beverage industry requires that the raw water supply be treated to a high degree. With deteriorating quality in most water supplies, processors are considering such advanced water treatment processes as ion exchange, activated carbon adsorption and reverse osmosis to produce the water required for the product. Such advanced treatment schemes could as well be applied to produce process water from treated effluents for reuse.

8 EDIBLE OIL PROCESSING

8.1 Processes and Waste Properties

The manufacture of edible oils and margarine involves extraction of the oil from the raw material and refining of the product to produce a saleable commodity. The production of edible animal oils and fats, such as lard, from rendering processes has been discussed previously in Section 4 and is not included in this section.

The principle oilseed grown in Canada is the rapeseed. Although other oilseeds such as soy are also processed, rapeseed is the most important source of vegetable oil in Canada. Rapeseed crushing plants use established oilseed crushing practices, and many plants are designed to handle more than one oilseed.

Oil extraction from the oilseed can be done by solvent extraction or mechanical pressing. Pressing is normally used only for high oil concentrations. Solvent extraction is the more common process. The seeds are pretreated to remove foreign materials. The seed may be dried, cracked, crushed, hulled or steamed prior to oil recovery. The oil is extracted from the solid material (meal) by counter-current contact with the solvent, usually hexane. The solvent is recovered from the oil by evaporation and is ready for refining. The meal is toasted, dried and pelletized to produce a high quality protein for animal feed.

The refining process consists of a series of operations designed to remove phosphatides, free fatty acids, pigments and odour and flavour components. The basic processes are degumming by hydration and acid treatment and alkali refining to separate fatty acids as soapstock. The refined oil is then bleached, hydrogenated and deodorized prior to packaging. A block diagram of the oilseed process is shown in Figure 25.

Wastewaters from the edible oil industry include relatively clean, high volume barometric condenser water from the deodorizer process and acid water, resulting from acidification and washing of soapstock, which contains high concentrations of fatty acids, oil and protein. Emulsified oils are also discharged during the separation of soapstock and washing of the recovered oil. Estimates of the total effluent volume from margarine manufacturing are 50 m^3/t of oil with a BOD load of 4 - 11 kg/t. However, studies at the Swift and Company Edible Oil Refinery at Bradley, Illinois found no correlation between waste flow or loading and production rate.

In a survey of the Canadian rapeseed processing industry, refining effluents were found to be the major contributors to the total waste loadings. Average waste loadings from these surveys are summarized in Table 9. Considerable variability was noted in water usage and waste strengths between plants.

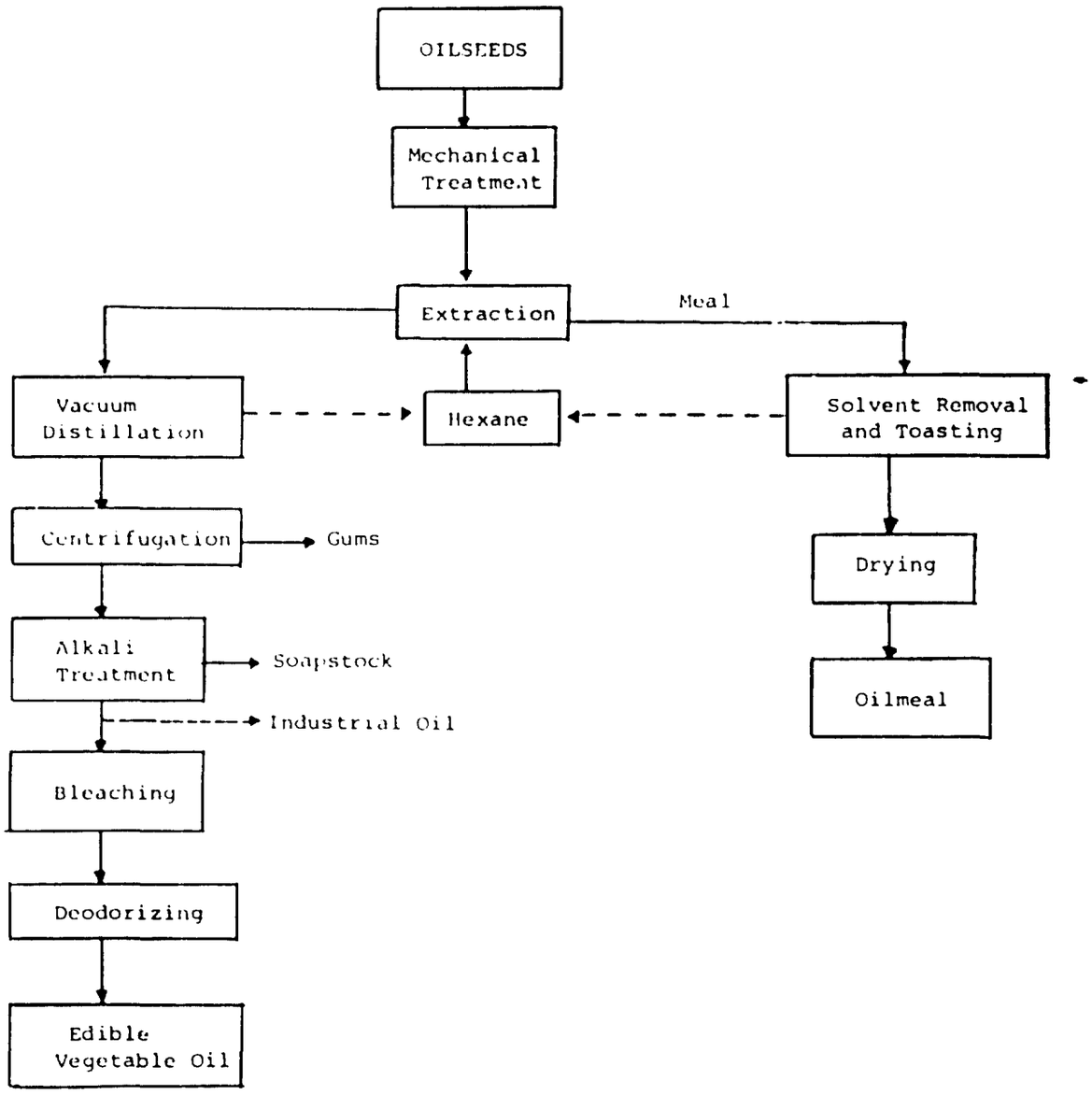

FIGURE 25 FLOWSHEET OF EDIBLE OIL PROCESSING

TABLE 9 EFFLUENT LOADINGS FROM CANADIAN RAPESEED PROCESSING PLANTS[1]

Process Stream	Average BOD Load (kg/t)	Average EE[2] Load (kg/t)	Average Water Usage (L/kg)
Extraction Plant Total Effluent	0.23	0.008	0.52
Refining Total Effluent	0.26	0.003	0.10
Combined Crushing and Refining Total Effluent	0.76	1.92	5.30
Margarine Plant Total Effluent	0.04	0.008	0.22

[1] From Cambrian Processes Ltd. (1977)

[2] EE = Ether extractable oil and grease

8.2 Water and Waste Management

Rapeseed crushing is primarily a Canadian industry. Rapeseed oil is not accepted for food use in the United States, as American rapeseeds contain excessive concentrations of toxic thioglucosides not found in the Canadian rapeseed strains. Much of the edible oil processing done in the U.S. is based on soy, corn, cotton and other oil seeds. Therefore, much of the information developed in the U.S. may not be directly applicable to the Canadian edible oil industry. Further studies would be required in this area.

Edible oil processing can be divided into crushing and refining for convenient discussion.

8.2.1 Crushing Operations. Process effluents from crushing operations can be minimized by water and waste management programs. Seed cleaning, cooking and prepress operations do not produce any direct liquid effluents. If dry cleanup is practised in these areas, there should be no aqueous discharges.

Most edible oil plants minimize solvent losses by steam stripping of solvent recovery system effluent prior to discharge. Proper maintenance and operation of wastewater reboilers will result in extremely low solvent losses from the system.

Degumming of the raw oil reduces subsequent losses in the refining operation. However, the barometric condensers of the oil vacuum driers must be controlled to minimize entrainment of oil droplets. Barometric condenser water can be recirculated.

8.2.2 **Refining Operations.** Primary sources of waste in edible oil processing result from washing of the refined oil to remove sodium salts of free fatty acids and separation of precipitate from the recovery of soapstock. Methods have been developed by the Northern Regional Research Laboratory of the U.S. DA to eliminate both of these waste streams in the alkali refining of soybean oil. The techniques should be equally applicable to rapeseed refining.

Soapstock which contains approximately 38 percent water is dried, after neutralization with sulphuric acid, to approximately 4 percent moisture. The product, neutralized dried soapstock (NDSS), appears to be an excellent poultry feed additive. Processing costs (1974 US $) are estimated at $0.034/kg of NDSS. One hundred kilograms of raw soapstock yield approximately 68 kilograms of NDSS. There are no effluents from the process except vacuum evaporator condensate.

Water from the washing of refined oil can be treated by ion exchange to remove residual free fatty acids and recycled, eliminating this waste stream. This process also removes metal cations from the oil and wash water which appears to improve the flavour of the oil. Both of these processes have been thoroughly tested in pilot-scale studies and appear to be feasible for full-scale commercial application.

Fatty acid scrubbers on deodorizers can recover a large proportion of the fatty acids as a saleable product. This material contains up to 1000 mg/L tocopherols which are used extensively as dietary supplements as they contain Vitamin E. Deodorizer blowdown can also be returned to the refinery acidulation system for recovery.

Other in-plant methods of waste control are recirculation of barometric condenser water and the use of a vapour scrubber between the deodorizer and the barometric condenser to minimize oil entrainment in condenser waters.

8.3 Physical Treatment Process Applications

The contaminants of primary concern in process effluents from edible oil production are emulsified and non-emulsified oils resulting from equipment washing, spills and from the washing of the oil to remove sodium salts of free fatty acids, as well as suspended particulate matter particularly from wet scrubbers in the crushing operation. The non-emulsified oils and suspended solids can be readily removed by physical means.

8.3.1 **Gravity Clarification.** Most edible oil producers use gravity clarification to remove suspended solids and oil from the process effluents prior to discharge. Conven-

tional grease traps can be used to remove readily separated oils and coarse solids. However, gravity oil-water separators equipped with continuous surface and bottom scraping devices are more effective. Retention times in the order of 30 to 60 minutes will typically result in the removal of 30 to 50 percent of the suspended solids, oil and BOD from the process effluent.

Inclined plate separators, such as those developed for the petroleum industry, can provide the same degree of removal as conventional gravity separators but require considerably less space due to the higher hydraulic loadings which can be applied. However, the plates can become fouled with accumulated solids and oil. To maintain good performance, a more intensive cleaning and maintenance program is generally necessary.

8.3.2 Flotation. Air flotation can significantly increase the rate of separation of free oils from process effluents. Dissolved air flotation is most commonly used, either in the total influent pressurization or recycle pressurization mode. Removal of free oil and suspended solids can approach 90 percent in a well operated dissolved air flotation system. However, the increased capital and operating costs associated with air flotation systems cannot, in general, be justified for edible oil refiners unless chemical treatment stages are included to separate emulsified oil. Pretreatment flotation units without chemical coagulation are relatively uncommon in North America although they have been used to some degree in European edible oil refineries.

8.3.3 Filtration. Granular media filters can be used after grease removal in gravity separators to remove residual solids and grease. The major limitation to this application has been the fouling of the filter media with accumulated oil. Steam cleaning can result in polymerization of the accumulated oil, further compounding the removal problem. Hexane extraction is expensive as the recovered oil is of poor quality. Caustic solutions have been used with some success.

Coalescing filters can improve the gravity separation rate of finely dispersed oil droplets. One of the problems, however, is associated with the presence of solids in the waste stream which tend to plug the coalescing media. Coalescing filters have been used in petroleum refineries and chemical plants but there is little information available regarding the effectiveness for edible oil refining wastewaters.

8.3.4 Soapstock Drying. Soapstock disposal from edible oil refineries located a distance from soapmakers and specialty chemical markets can be a problem. The soapstock is normally alkaline as a result of the refining process and contains a high moisture content. Studies in the United States have shown that neutralized soapstock can

be dried to produce a poultry feed additive, neutralized dried soapstock (NDSS). This process eliminates the disposal problems associated with soapstock.

8.4 Physical-Chemical Treatment Process Applications

To improve treatment process efficiency, the wastewater oil-water emulsion must be broken chemically to allow removal of the emulsified oil along with the free oil by physical methods. Chemical treatment can also improve the removal of free oils by coagulation of dispersed oil droplets.

The conventional metal coagulants, lime, alum and ferric chloride have all been successfully used, particularly in conjunction with dissolved air flotation. Neutralization is normally required as acidulation and alkali refining processes can result in a wide variation in influent pH, inhibiting efficient chemical coagulation. Automatic pH control should be specified in such instances. Organic polymers can significantly improve the coagulation efficiency.

A review of a physical-chemical treatment system combining alum and polymer coagulation with dissolved air flotation for treatment of edible oil refinery process effluents is given in Section 12.2. A comprehensive study of physical-chemical oil recovery was also done. The details of the system are described in the case history.

Electroflotation appears to have some advantages for pretreatment of edible oil refining wastes. Reduced chemical dosages are indicated due to the beneficial effects of electro-coagulation. The minimal amounts of turbulence in such systems can also improve efficiency. Selection of electroflotation over dissolved air flotation would be based on economic comparisons of chemical and power costs for the two systems.

8.5 Advanced Treatment Process Applications

As the insoluble pollutants from edible oil refining are readily separated by physical and physical-chemical methods, there has been little incentive to evaluate more advanced treatment techniques. The exception is the in-plant application of ion exchange resins to treat water from the washing of alkali refined oils. This wash water contains residual quantities of oil from the centrifugal separation process as well as sodium salts of fatty acids. Studies by the U.S. DA indicate that the sodium content can be removed by cation exchange resins allowing reuse of the wash water. By recycling the wash water, oil losses are eliminated without affecting the quality of the product. Wash water reuse reduces process effluent BOD by as much as 94 percent. The exchangers are regenerated with acid which can be subsequently used to neutralize soapstock in the production of NDSS.

Economic evaluations based on pilot-plant studies at a soybean oil refinery indicate that the process is economically feasible in areas where sewer surcharges based on BOD discharges are imposed. The process should be equally applicable to washing of alkali-refined rapeseed oils.

9 FISH AND SEAFOOD PROCESSING

9.1 Processes and Waste Properties

The fish and seafood processing industry includes:

- commercial filleting of groundfish such as cod and flounder,
- canning of shellfish such as crab, shrimp and lobster,
- canning of fish species such as salmon and herring,
- production of fishmeal and fishoil from low-grade fish such as mackerel, alewives and menhaden as well as from offal resulting from other fish processing,
- commercial freshwater fish processing.

Stages in the processing of fish and seafood vary depending on the product. Raw fish can be unloaded by dry bucket conveyors or by wet methods such as fish pumps. Fish are conveyed to storage or processing by fluming or dry conveying. In groundfish processing, the fish is normally filleted by hand and washed prior to freezing. Most species are skinned prior to filleting, although ocean perch are mechanically descaled. In shellfish processing, butchering removes shells and other undesirable material prior to cooking, brine dipping and packaging. In salmon canning, the fish are eviscerated and beheaded, trimmed and washed prior to canning, cooking and packaging. Herring undergo similar processing but oils or sauces such as tomato and mustard are normally added to the canned fish prior to cooking. Herring can also be filleted or marinated. Schematic flowsheets of some of the basic processes are given in Figures 26 (groundfish filleting), 27 (crab processing), and 28 (salmon canning).

Fish processing results in large quantities of solid wastes (offal). As much as 80 percent of shellfish and 35 percent of salmon are discarded as waste. Furthermore, five to ten percent of the fish solids can be lost in the liquid effluent in the form of dissolved or suspended matter. The degree of solubilization of fish solids increases significantly with the contact time between the solids and the flume water.

Principal sources of liquid effluent from fish processing operations are flume water used to transport whole fish or offal, water used in descaling, filleting, trimming, and cleaning operations, and equipment and floor wash water. These streams are high in suspended and dissolved organic matter, principally proteins. Table 10 summarizes the characteristics of effluents from various fish processing operations. Wastewater volumes and contaminant loads are dependent on plant size, age and location.

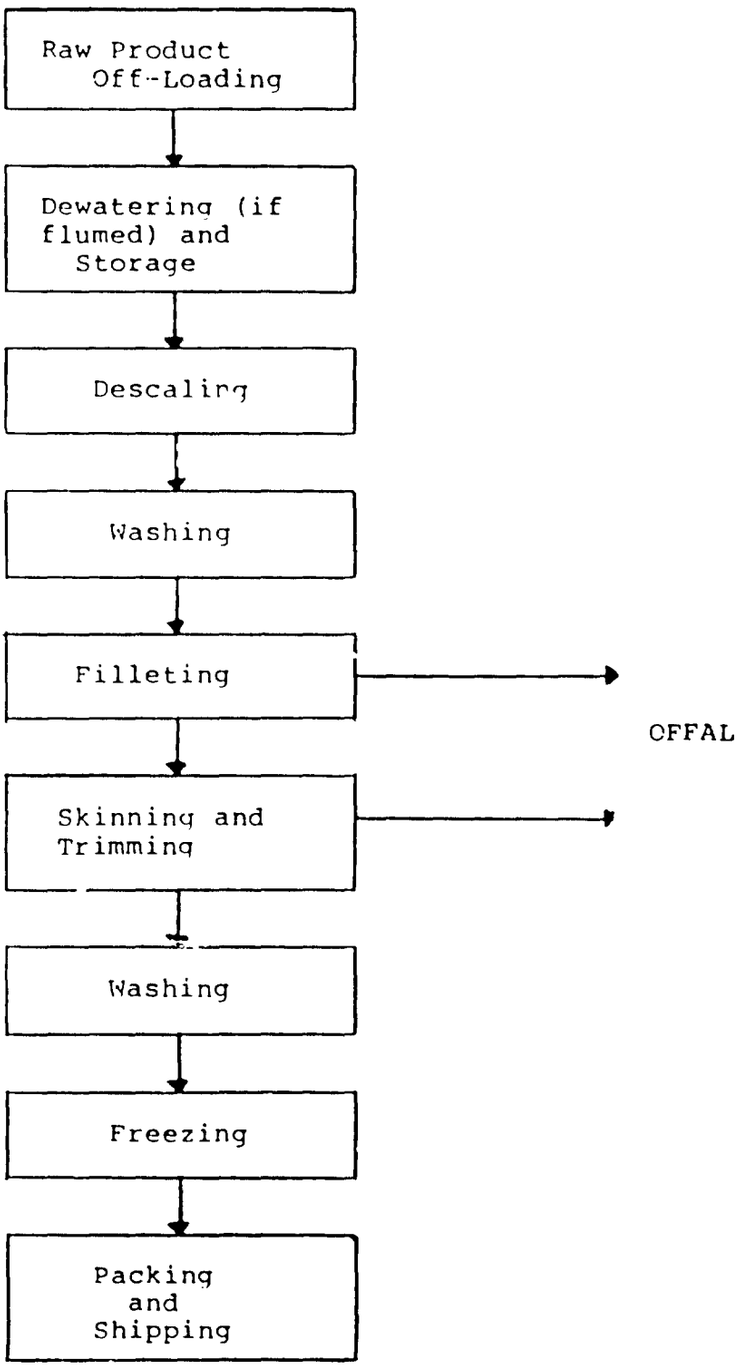

FIGURE 26 FLOWSHEET OF GROUNDFISH FILLETING

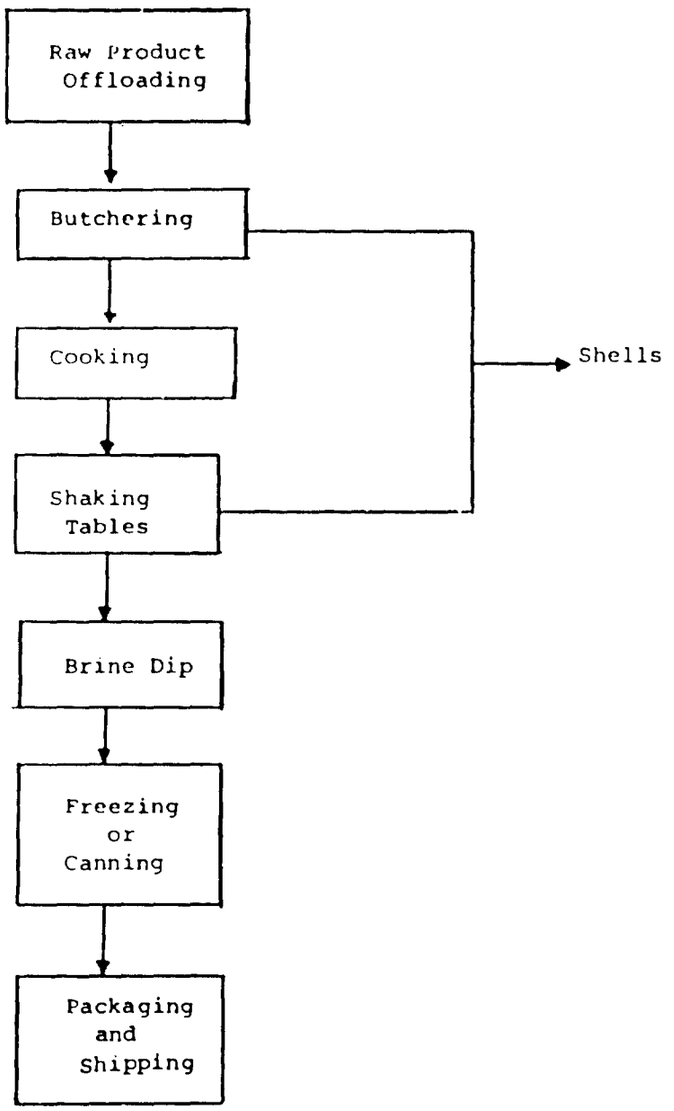

FIGURE 27 FLOWSHEET FOR CRAB PROCESSING

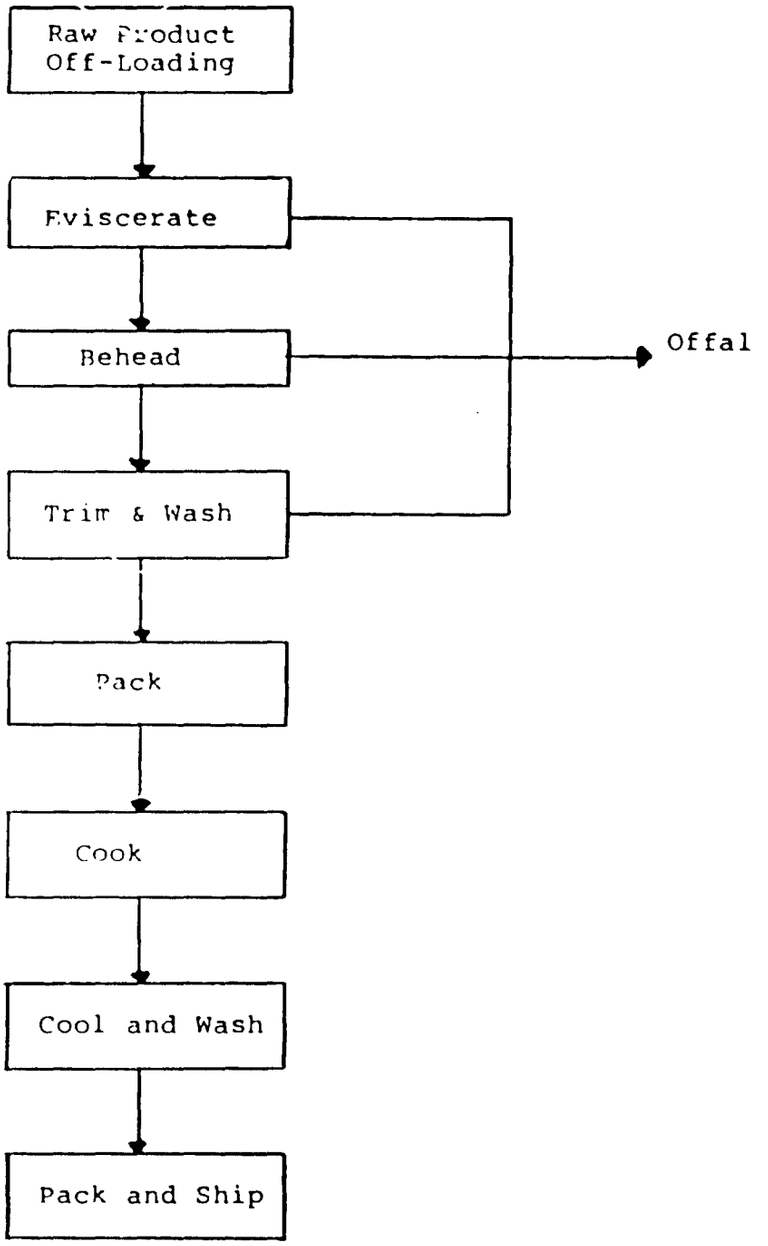

FIGURE 28 FLOWSHEET OF SALMON CANNING PROCESS

TABLE 10 CHARACTERISTICS OF FISH AND SEAFOOD PROCESSING WASTES*

Process	Water Usage m^3/1000 kg Raw Fish	BOD Load kg/1000 kg	Suspended Solids Load kg/1000 kg	Oil and Grease Load kg/1000 kg
Dry-Line Ground Fish Filleting	15 - 167	1.3 - 7.9	1.0 - 22.5	0.1 - 1.0
Wet-Line Ground Fish Filleting	46 - 329	15.0 - 20.2	7.1 - 34.0	13
Salmon Canning	-	29.1	16.8	3.8
Herring Filleting	-	22	21	10
Herring Marinating	-	215	85	83
Perch and Smelt Combined Waste Water	-	4.5	2.3	-

*From Riddle and Shikaze (1973)

Offal from the processing operation is normally handled in an associated fish meal plant. Meal plants can also be designed to handle whole, low-grade fish. The raw material is cooked, pressed to remove oil, and dried to produce high protein fish meal. Press liquor is centrifuged to separate oils, and the oil polished. The residual material is a highly concentrated stream termed "stickwater". Modern meal plants evaporate stickwater to produce concentrated fish solubles which can be marketed directly or returned to the drier for preparation of meal. A flow diagram of a typical fish meal plant is given in Figure 29.

Bloodwater is the seepage resulting from offal or whole fish storage prior to processing. In older plants, stickwater and bloodwater are often discharged directly to the receiving waters. Other sources of contaminated liquid wastes are deodorizer water from the driers and plant wash water. Characteristics of meal plant wastes are summarized in Table 11.

TABLE 11 CHARACTERISTICS OF FISHMEAL PROCESSING WASTES*

Stream	BOD (mg/L)	Suspended Solids (mg/L)	Oil and Grease (mg/L)
Bloodwater	120 000	15 000	3000
Stickwater:			
Groundfish	120 000	10 000	300
Herring	70 000	30 000	5000
Pearch and Smelt	160 000	66 000	1200
Deodorizer Water	20	100	-
Condenser Water	10	80	-

*From Riddle and Shikaze (1973)

9.2 Water and Waste Management

Water usage in the fish processing industry varies widely, often showing no relationship to the quantity of fish processed. The technology to reduce process water usage is available. The major limitation at present is the capital and operating cost associated with this equipment in the small, outdated fish processing plants prevalent, particularly, in Eastern Canada. Due to the relatively intensive use of manual labour in

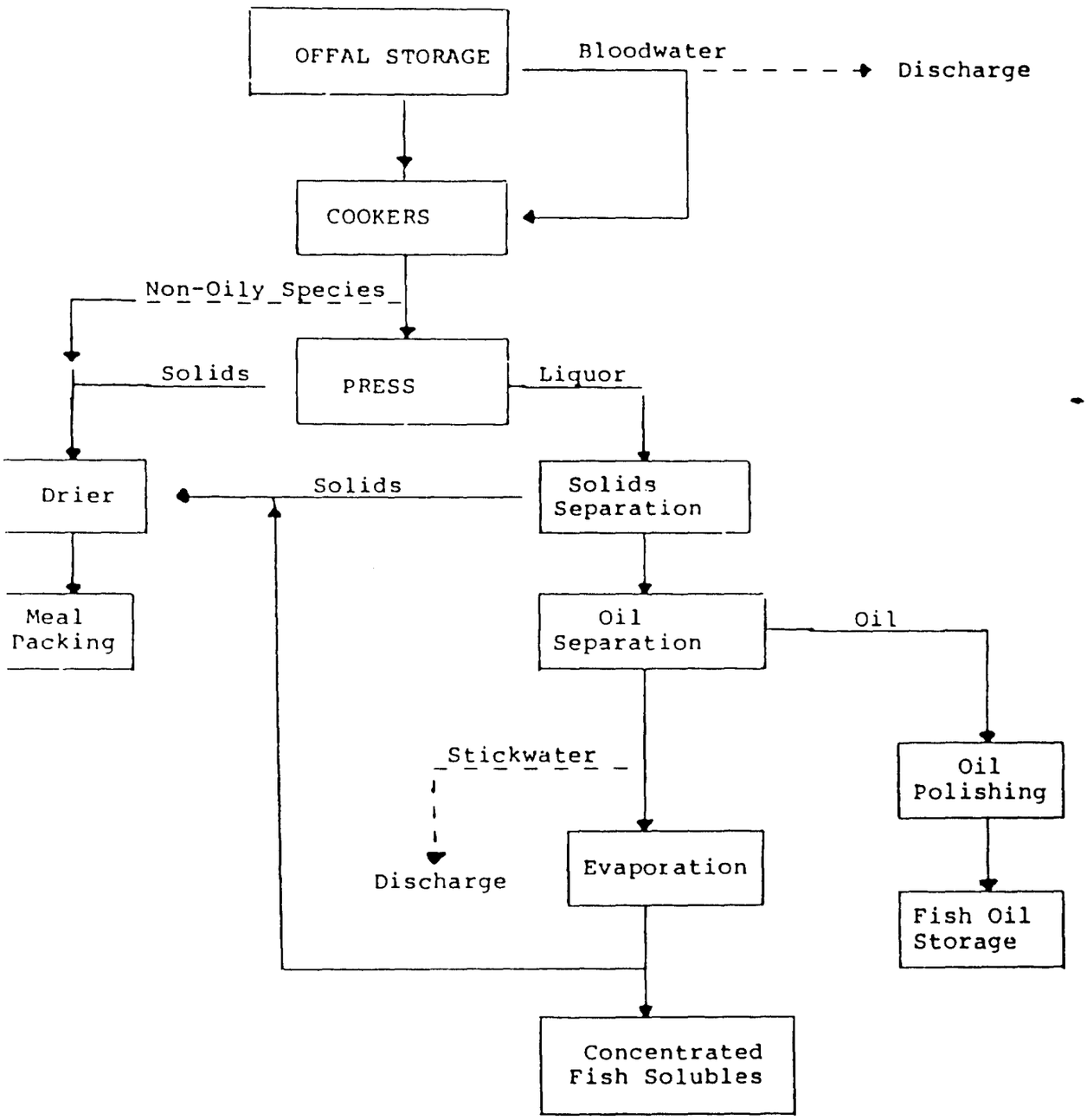

FIGURE 29 FLOWSHEET OF FISHMEAL PROCESS

these older plants, health inspectors tend to provide a larger safety margin to ensure product quality. This safety margin includes copious volumes of clean water with little acceptance for recycle or reuse schemes. Larger, technologically advanced plants, particularly in Western Canada have begun to incorporate water saving and byproduct recovery systems.

Some areas in fish processing which can be improved to reduce water usage and control pollutional loading are discussed in the following subsections.

9.2.1 Unloading. Raw fish unloading is often done hydraulically due to the low operating costs and minimal damage to the fish. Systems such as the air-lift or hydraulic syphon are readily modified to allow reuse of the water. Fish pumps should be avoided due to the excessive solubilization of contaminants.

Vacuum unloading systems minimize water usage and hence have advantages in many situations despite the relatively high energy requirements. Dry unloading is a labour intensive operation and can result in excessive damage to the raw material.

9.2.2 Ice Separation. Ice used during storage of raw fish prior to processing is contaminated with blood and slime. Separation or melting of ice with water results in large volumes of relatively dilute wastewater. Physical separation of ice prior to melting will reduce the volume of wastewater and maintain higher contaminant concentrations which can be more readily treated by physical-chemical means.

9.2.3 Transport. Dry transport of raw fish, offal and product can significantly reduce water usage and waste loadings. Conveyor belts or pneumatic systems are available for raw fish and offal and could be adapted for final product if sanitary conditions can be maintained in the plant. Simple tote bins or front-end loaders can be used for disposal of offal from the processing lines.

Studies have shown that dry handling techniques reduce the waste load in groundfish operations by at least 50 percent. If flume systems must be used, the solids should be separated from the flume water as quickly as possible as the degree of solubilization of waste materials is proportional to the contact time.

9.2.4 Thawing. Thawing of frozen fish by once-through water contact dissolves large amounts of blood, slime and oil. Recirculation of thawing water will reduce consumption in these areas. Consideration should also be given to the use of air, electric or vacuum techniques to eliminate the use of water in this area.

9.2.5 **Mechanical Process Equipment.** In mechanical scaling, skinning, filletting and gutting machines, water application rates should be carefully adjusted and frequently checked to optimize water usage consistent with product quality. The improved design of spray nozzles in such equipment can often reduce water usage without affecting the performance.

9.2.6 **Byproduct Recovery.** Fish meal operations result in two concentrated waste streams, bloodwater and stickwater. Evaporation of these wastes can improve the byproduct yield while significantly reducing effluent strength. Also of importance in controlling waste strength is the careful operation of evaporators and barometric condensers to minimize boil-over and entrainment.

Fish processors which operate meal plants can often significantly reduce waste loadings by diverting concentrated waste streams directly to the meal operation. If unloading water is reused to increase the organic strength, it can often be economically evaporated. Such steps can also improve the yield of meal from the operation.

Fish meal, oil, protein hydrolysates, enzymes, hormones and vitamins are a partial list of marketable commodities recoverable from fish wastes. Chitin and its derivative, chitosan, recoverable from crustacean shells such as shrimp is drawing a good deal of attention as a byproduct of the shellfish industry. Two Japanese firms and one company in the United States are producing chitosan commercially. Chitosan can be used as a natural flocculant in the treatment of wastewaters, as well as in pharmaceuticals, paper making, food thickening and extruding.

9.2.7 **Plant Cleanup.** The one area of water consumption where most fish plants can realize a saving is in plant cleanup. Many processors flood the floors and processing tables with a continuous supply of fresh water. Spray nozzles rather than hoses on processing tables will maintain sanitary conditions at significantly lower water application rates. As in any food processing operation, dry cleanup will improve byproduct recovery while reducing water usage. High pressure low volume sprays are most suitable for final wash up. The water supply system should be designed so that the flow can be shut-off in any areas where water is not required.

9.3 Physical Treatment Process Applications

Wastewater treatment in the fish and seafood industry is relatively unsophisticated. In most cases, pretreatment involves the removal of coarse solids prior to discharge to the receiving waters. This is particularly true of processors located near the

sea coast. Freshwater fish processors have adopted somewhat more effective waste treatment processes.

9.3.1 Screening. Screening is the most common treatment technique to remove and recover solids from fish processing plant effluents. It is practised to varying degrees throughout the industry to recover marketable fish solids and reduce the effluent solids loading on the receiving waters. The process requires minimal capital and operating expense. Furthermore, relatively dry solids can be rapidly recovered to prevent significant deterioration of the material and reduce solubilization of contaminants resulting from prolonged contact with the process water.

Evaluations have been done on all the types of screens described in Section 2.1.2 with various fish processing effluents.

Inclined or static screens are probably the most popular design, principally due to the extensive testing which has been done with these units. Removal efficiencies, in terms of suspended solids, can range from as low as 10 percent to as high as 60 percent depending on the mesh size and characteristics of the solids. Mesh size is more dependent on the blinding characteristics than on attaining maximum removal efficiencies. The most common operating size is approximately 25 mesh. There are indications that coarse screens are more susceptible to blinding than fine sreens.

Vibrating screens can also be effective although they generally produce lower solids removal and are more sensitive to flow variation and solid loading than inclined screens. Rotating screens such as the Rotostrainer and Microstrainer are less common due to the higher operating costs compared to inclined screens, but they can be effective for salmon canning wastes, herring bailwater and redfish descaler effluents.

The Sweco centrifugal separator has been shown to be effective for salmon, tuna and shrimp wastes in pilot-scale testing and is presently being used to treat process flows from perch and smelt processing and trout processing effluents. The additional removal resulting from flotation of the aerated waste after fine-mesh screening substantially increases the removal efficiency at minimal additional cost. The Sweco separator typically employs extremely fine screens, as low as 325 mesh. Blinding can be a problem. To reduce the tendency to screen blinding, automatically controlled hot and cold wash cycles and even caustic wash cycles have been used.

Screens are a reliable and highly efficient means of primary treatment of fish processing effluents. The screened solids seldom require additional dewatering prior to processing for fish meal or disposal. The location of the screen is important to allow rapid separation of the solid material from the water phase. Often a number of screens

separately treating wastewaters from individual processes can be more effective than screening of the total process effluent flow. Progressively finer mesh screens in series can also improve treatment performance and reduce blinding problems. As in any such installation, pilot-scale testing is warranted prior to selection of a specific screen design and mesh size. Special attention should be given to screen blinding as a result of fish roe in the process effluent.

In many fish and seafood processing plants, a considerable volume of salt water is used for fluming, washing or boat unloading. The corrosive nature of these wastes requires special consideration during material and equipment selection.

9.3.2 **Gravity Sedimentation.** Contaminants in fish and seafood waste not removed by screening are colloidal and dissolved. Gravity sedimentation is not significantly more effective than screening for removal of these materials. As gravity clarifiers require more space and involve greater capital and operating expense, they are not commonly applied to fish processing wastes.

9.3.3 **Flotation.** Dissolved and dispersed air flotation have been extensively evaluated for treatment of fish processing wastes. There are no known applications of vacuum flotation in the industry. Electroflotation has been evaluated in pilot-scale testing but has not been applied in full-scale operations.

The fish processing industry has typically used circular dissolved air flotation units with total influent pressurization. However, many new installations operate in the recycle pressurization mode. American studies comparing the three possible operating - total influent pressurization, partial influent pressurization and recycle pressurization - indicate that the recycle pressurization is most effective. In general, dispersed air flotation is less effective than dissolved air flotation; however, the capital cost is considerably less.

Dissolved air flotation after screening is probably the most economical and practical method for treating fish and seafood wastes. However, to attain consistently efficient operation, chemical addition is normally required. This can substantially increase operating costs.

9.3.4 **Evaporation.** Evaporation is the most accepted method of preventing the discharge of stickwater from fish meal operations. Modern multi-stage evaporators provide energy efficient concentration of stickwater to produce high protein animal feed byproducts. In some cases, other concentrated waste streams can be economically evaporated within the facilities of an existing meal plant. These include bailwater, pumpout water and bloodwater from offal storage.

9.4 Physical-Chemical Treatment Process Applications

Chemical precipitants and coagulants can effectively remove colloidal solids and some dissolved organics from fish and seafood processing effluents, improving the treatment performance of physical separation units. Emulsified oils cannot normally be removed by physical methods such as flotation without chemical addition. Adjustment of pH to near the isoelectric point of dissolved proteins (pH range of 4.5 to 5.0 for fish proteins) can result in effective precipitation of dissolved organic matter.

In most physical-chemical process applications, flotation has been used for solids separation. However, numerous studies have been done to evaluate sedimentation as the separation mode. Chemical addition has also been used to improve the treatment efficiency of the flotation cells installed in conjunction with Sweco centrifugal separators in shrimp waste, trout waste and tuna waste applications.

All the conventional metal coagulants such as lime, alum, sodium aluminate and ferric chloride have been found to be effective in such applications. Generally, alum is most cost effective. Organic polymers, including chitosan, can considerably improve operational efficiency.

Although protein precipitation has not been as extensively studied for fish processing effluents as for meat and poultry processing effluents, the principles are equally applicable. Four European fish oil and fish meal plants have installed dissolved air flotation systems with the necessary equipment to allow protein precipitation with sodium lignosulphonate in the future. The operation of the Alwatech protein recovery system is similar to that described in Section 4.4. Some studies, however, have shown that protein recovery is not as effective from fish processing effluents as for meat and poultry effluents due to the wide, unpredictable variation in the protein concentration of the waste stream.

9.5 Advanced Treatment Process Applications

As the principal concern of most fish processors is the removal of gross solids and flotable greases prior to discharge of the wastewaters to the sea, few advanced processes have been evaluated, even at laboratory-scale, for treatment of effluents from fish and seafood processing.

10 MISCELLANEOUS FOOD PROCESSING INDUSTRIES

10.1 Processes and Waste Properties

The previous six sub-categories of the food processing industry cover the majority of food manufacturers and the largest water users in the Canadian industry. However, there are numerous smaller categories of food production where in-plant water conservation, byproduct recovery and physical-chemical treatment are equally applicable. Commodities and processes which are included in this category are:

- sugar beet processing,
- baked goods,
- egg grading and breaking,
- confectionaries,
- breakfast cereals,
- coffee,
- soy protein production,
- rice preparation,
- specialty food industry,
- starch (corn and wheat) industry.

A general review of the sources and the major characteristics of wastes from these industries is given in Table 12. More detailed descriptions are included, where applicable, in the subsequent discussions of in-plant conservation, recovery, reuse and treatment.

10.2 Water and Waste Management

With the exception of sugar beet processing, the manufacturing categories included as miscellaneous food processing industries are primarily low volume water users. The water conservation measures outlined in Section 3 apply in general to these processes. There are, however, some specific areas where water and waste management can provide positive results.

10.2.1 Sugar Beet Processing. Sugar beet processing is of relatively minor importance in Canada due to the unfavourable climatic conditions. However, considerable work has been done in the United States on process effluents from sugar beet processing and some of the more relevant findings are reviewed here.

TABLE 12 SOURCES AND CHARACTERISTICS OF WASTEWATERS FROM MISCELLANEOUS FOOD PROCESSING INDUSTRIES

Industry	Major Sources of Wastes	Major Characteristics
Sugar Beet Processing	Flume and wash water Waste water from processing and juicing operations Lime muds and condenser water Molasses or Steffens filtrate	High in dissolved and suspended organic matter containing sugars and protein.
Baked Goods	Washing and greasing pans Floor washing	High in BOD, oil, sugar, flour and detergents
Egg-grading and breaking	Egg washing and equipment washing.	High in BOD and suspended solids, principally egg constituents (egg albumin and yolk)
Confectionaries	Equipment washing Syrup canning losses	High in dissolved organics, primarily sugars, and oils
Breakfast Cereal	Cleaning operations	High in suspended solids and colloidal and dissolved organic matter
Coffee	Pulping wastes Fermentation tank wash water	High in settleable solids and soluble sugars
Soy protein production	Soybean whey	High in protein and sugar (BOD)
Rice preparation	Soaking, cooling, washing and draining operations	High in soluble and colloidal organics, primarily starches
Specialty Food Industry	Cleaning operators	Similar to meat processing wastes
Starch (Corn and wheat) Industry	Steep water spills, clean-up operations	High in soluble organics, primarily sugars

The high intensity, short-term nature of sugar beet processing increases the emphasis on in-plant control of waste generation as viable treatment alternatives are not available. Many large processors are already at or near zero discharge levels. Many plants have no direct discharge to receiving waters except for condenser and cooling water. Waste disposal requirements have been essentially eliminated by recycling practices. The most important steps include:

- recycle of beet flume water after solids removal,
- recycle/reuse of barometric condenser water,
- reuse of pulp press water in diffusers,
- dry conveying of beet pulp,
- minimization of entrainment and contamination in condensers,
- application of the Steffen process and concentration Steffen filtrate for animal feed by mixing with waste pulp.

It is estimated that these measures can reduce water requirements in the beet sugar industry by more than 97 percent, from levels in excess of 1000 tonnes of water per 100 tonnes of beets processed to 30 tonnes per 100 tonnes of beets processed.

10.2.2 **Egg Grading and Breaking.** In egg-breaking and processing plants, product loss can exceed ten percent due to poor in-plant housekeeping methods, primarily excessive spillage. Improved controls can significantly reduce water usage and wastewater load. All the general methods described in Section 3 should be considered for in-plant control of water and waste.

10.2.3 **Confectionaries.** The use of dry cutting machines and improved canning operations eliminates the need to recover dextrose from many confectionary processing lines.

10.2.4 **Breakfast Cereals.** The major water usage in the production of ready-to-eat cereals results from floor and equipment cleaning operations. Dry cleaning would eliminate the aqueous discharges.

10.2.5 **Coffee and Rice Preparation.** Solid wastes should be recovered and utilized wherever feasible. Coffee grounds can be composted and utilized as fertilizers or recovered as a fuel source. Rice hulls similarly have heating value, but silica can also be recovered for use in such applications as cement manufacturing.

10.2.6 **Soy Protein Production.** In the acid precipitation of soybean protein, soybean whey similar to milk whey is produced. Approximately six thousand metric tons of

soybean whey are disposed of annually in the United States. Valuable protein concentrates can be recovered from this material, producing a marketable byproduct and significantly reducing waste loads. Membrane processes and chemical processes have been shown to be effective. Membrane processes have also been shown to be effective in recovering whey from processing of other oilseeds.

10.2.7 Starch Industry. The starch industry has, in general, been very successful in reusing process waters to reduce plant losses substantially. Steep water is evaporated to produce feed materials. Multiple stage centrifuges are commonly used for improved recovery of starch. Principal waste sources result from clean-up and plant spills which can often be controlled by simple in-plant methods.

10.3 Physical Treatment Process Applications

Although most of the food processors included in the miscellaneous category are low volume water users, they are commonly located in urban areas and discharge process effluents to the municipal sewer system. Some degree of pretreatment is often required to meet discharge bylaws. Physical treatment processes are commonly applied.

10.3.1 Sugar Beet Processing. Considerable American information is available regarding treatment of sugar beet processing effluents.

Sugar beet processing requires considerable volumes of water during the short operating season. These large volumes of concentrated wastes from a seasonal operation cannot be economically handled by current biological treatment technology. Therefore, processors have emphasized water reuse, recycle and in-plant control to reduce discharges to the receiving waters.

The principal sources of waste loading are flume and wash water. Recycling is possible after suspended solids removal. Sedimentation and impoundment ponds and conventional gravity clarifiers are most commonly used. Alternatives include hydrocyclones and inclined screens. As the suspended matter is principally soil and grit, special attention should be given to abrasion of pumps and equipment. These materials settle rapidly and can thicken to such a degree as to make pumping difficult.

10.3.2 Baked Goods. Suspended oils and particulate matter resulting from equipment washing can be readily removed in grease traps, catch basins, conventional gravity clarifiers and air flotation units.

Dissolved air flotation units can be most effective if properly designed and operated. However, the high temperature and the detergent content of the waste stream can adversely affect performance if not considered in the design stages.

10.3.3 **Egg Grading and Breaking.** Except for egg shells, contaminants in egg grading and breaking wastes are primarily soluble and colloidal in nature. Simple physical treatment methods are relatively ineffective for reducing the effluent BOD concentration.

10.3.4 **Confectionaries.** Wastes from the manufacture of confectionaries can contain high concentrations of soluble sugars as well as suspended and emulsified oils. Physical treatment methods are relatively ineffective for removal of such materials.

10.3.5 **Breakfast Cereals.** Ready-to-eat cereal production results in discharges of dissolved and suspended starches. The suspended matter is readily removed by screening or gravity sedimentation without chemical addition.

10.3.6 **Rice Preparation.** Much of the organic contamination in rice washing water is colloidal and soluble. Gravity settling without chemical addition is relatively ineffective of a pretreatment of these wastes.

10.3.7 **Specialty Food Industry.** Removal of grease and suspended solids from the production of specialty foods can be economically accomplished using techniques similar to those applied in meat and poultry operations. Screens, grease traps, gravity clarifiers and dissolved air flotation can effectively reduce process effluent discharges.

10.3.8 **Starch Industry.** Starch industry wastes are readily biodegradable and are normally treated by biological means. However, excess quantities of particulate matter lost from the process should be removed prior to the biological system to reduce the organic load. Physical methods such as clarification and centrifugation are most commonly used.

10.4 Physical-Chemical Treatment Process Applications

Chemical coagulation can often improve the removal efficiency of physical treatment units providing pretreatment prior to discharge.

10.4.1 **Sugar Beet Processing.** Lime is very effective for removal of suspended matter from flume and wash waters. Soluble sucrose is also precipitated by the lime process as calcium sucrate. Lime addition also results in a pH elevation which has the advantage of controlling bacterial growth.

Alum and ferric chloride have also been evaluated but are not as effective as lime. Organic polyelectrolytes can be used alone or in conjunction with lime to improve the settling rates of the particulate matter.

10.4.2 **Baked Goods.** Acidification of bakery effluents effectively breaks oil-water emulsions to improve the overall treatment efficiency attainable by physical separation. Alum and ferric chloride are effective coagulants. The treatment efficiency attainable with either chemical is pH dependent. Laboratory jar testing over a wide range of pH should be used to define the optimum chemical, chemical dosage and pH range.

10.4.3 **Egg Grading and Breaking.** Soluble and colloidal components of egg grading and breaking can be effectively recovered by chemical means. Acidification and heat coagulation recovers the proteinaceous components of the effluent in a form suitable as an animal feed. Alum and organic polymers can also be used. Chitosan is also effective and has the advantage of not impairing the quality of the recovered solids in terms of the animal feed value.

10.4.4 **Confectionaries.** Chemical coagulants such as alum, lime and ferric chloride can be used to de-emulsify confectionary wastes and improve the removal rate of suspended materials such as coconut fines. However, these chemical methods are not effective for BOD removal if the waste stream contains high concentrations of soluble sugars lost from the process.

10.4.5 **Soybean Protein Production.** Soybean whey poses disposal and handling problems similar to cheese whey. The literature indicates that the proteins can be heat coagulated to allow recovery. If protein recovery is not economical, the process effluents from soybean protein production have been shown to be amenable to chemical oxidation using chlorine dioxide or hydrogen peroxide. Pretreatment by sedimentation or centrifugation to remove oils and suspended solids reduces the chemical requirements. The chemical costs involved in oxidation processes should be carefully evaluated in the pre-design stages.

10.4.6 **Rice Preparation.** Chemical coagulation with conventional metal salts improves the settling rates of colloidal materials in rice washing water.

10.4.7 **Specialty Food Industry.** In a manner similar to that described for the meat and poultry industry, removal of fats, solids and organic matter from specialty food industry wastewaters can be improved by coagulation prior to gravity settling or flotation.

10.5 Advanced Treatment Process Applications

Membrane processes have been evaluated in two specific applications. Reverse osmosis has been used full-scale to recover sugars from confectionary wastes. Both

ultrafiltration and reverse osmosis have been studied to recover protein from soy whey. In both cases, the economics are favourable due to the value of the recovered materials.

In the case of confectionary wastes, reverse osmosis has been demonstrated to be extremely effective, and a number of candy producers installed full-scale systems to reduce sugar losses. However, improved production equipment and in-plant control is much more economical. At least three candy factories have eliminated the need for reverse osmosis recovery by in-plant control of sugar losses.

For soy whey, preliminary studies indicate that reverse osmosis may be more economical than evaporation for preconcentration of proteins. The combined ultrafiltration - reverse osmosis process developed for cheese whey and described in detail in Section 12.5 is equally applicable to soy whey. As in the dairy industry, economic operation depends on the development of a market for the recovered soy whey protein.

Ion exchange recovery of soy protein in a fashion similar to whey protein recovery as described in Section 12.5 is also feasible but relatively untested.

11 WATER MANAGEMENT AND REUSE - SELECTED CASE HISTORIES

Many of the principles of water management and waste treatment described in the previous sections of the manual have been applied in operative food processing plants. Most have been evaluated extensively in pilot-scale studies. This section of the manual documents several case histories of water management and reuse in the food processing industry.

11.1 Water and Waste Management in the Meat Packing Industry

Two cases of water and waste management programs in the red meat industry are cited as examples of the benefits of reducing water consumption and waste loading. Both plants are involved primarily in hog slaughtering operations. The first case history deals with a relatively modern plant which, through innovative design and careful management, can be described as exemplary in terms of water and waste control. The second case history describes a relatively old facility in which, through the implementation of various in-plant housekeeping steps and minor equipment modifications, significant reductions in process effluent flow and loading were attained.

Case History 1

This modern packing plant, located in the American midwest, was built in 1969. The average production rate is 200 000 kg LWK per day or approximately 2000 hogs per day. The plant slaughters and processes byproducts but does no meat processing.

Total process water usage in the plant is approximately 142 litres per hog or 1.35 litres per kilogram LWK. The typical range of water usage in American meat packing plants is from 5 to 20 litres per kilogram LWK. Plants categorized as applying "advanced" processing technology in the U.S. have an average water consumption in excess of 10 litres per kg LWK.

Process effluent waste loads are in the range of 2 to 3 kg BOD per 1000 kg LWK. Reference to Table 1, in Section 4.1, indicates that this represents only about 25 percent of the average process effluent BOD from packing plants typified as "advanced".

The slaughtering and processing operations are typical of the industry. Water and waste conservation result from a combination of innovative modifications to equipment and careful in-plant control of water use.

Water conservation starts with the design of the water supply system. Inlet water flow is limited to a maximum of 17.5 L/s and delivered a pressure of 350 kN/m ^{2}. Duckbill spray nozzles in the various processing equipment are designed for high-pressure

low-volume operation. An intensive dry cleanup program is employed throughout the plant prior to high pressure washdown. Automatic shut-off valves are installed on all hand-operated hoses. Pen wastes are segregated and disposed separately. Blood is collected and dried. Barometric condensers in the rendering plant operate on water recycled from the anaerobic lagoon system. Vapours from the grease cookers are condensed with water from the same source.

A unique feature of the plant design is a centrally located scrap auger which mechanically transports all trimmings and rejected materials from the processing line to the rendering plant. Materials removed from the kill floor during dry cleanup are also transported by the scraper auger. This device is responsible for much of the water conservation in the plant.

Wastes from the kill floor pass through a primary grease trap operated at a surface loading of 80 to 120 m^3/m^2/day. All process effluents are treated by dissolved air flotation prior to discharge to the biological treatment system. The unit is operated at twenty percent effluent recycle for air dissolution. Recovered grease from the trap and flotation unit are processed in the byproduct plant for marketing as an animal feed additive.

The steps taken in this plant involve minimal capital expenditure. The result is a considerable savings in water, increased byproduct recovery and reduced waste treatment costs - all factors leading to increased profit per animal.

Case History 2

This Western American plant was built in 1917 and has been progressively expanded to its present production capacity of 1000 head of hogs and 50 head of cattle per hour. As a result of the Federal Water Pollution Control Act Amendments of 1972, an extensive program of water and waste management was initiated to determine the effectiveness of relatively minor in-plant changes on water usage and effluent loadings. Emphasis was placed on the hog slaughtering operation.

Prior to the implementation of the program, water usage in hog slaughtering was approximately 2000 m^3/day (3 L/kg LWK) with a resultant BOD load of 2800 kg/day (4.26 kg/1000 kg LWK). The hog slaughtering line is typical of most large operations. Principal water users in the process were identified as the dehairing machine, the stomach washer and the hasher-washer. These areas also contributed the major fraction of the BOD load.

184

Case History 3

The processing plant was built in the 1930's and has a capacity of approximately 23 000 birds/day. Management commenced a comprehensive in-plant conservation program which included hand-operated automatic valves on hand washers, feather flume water reuse, dry clean-up and, most importantly, an employee education program. Water usage subsequent to these early modifications was in the range of 15 to 20 litres per bird.

In 1977, with the cooperation of the U.S. DA, major steps were taken to further reduce water consumption. The most important step was the installation of a dry

becomes very concentrated as a result of extensive recycling. Implementation of a dry feather conveyance system is planned in the near future to eliminate this problem and further reduce overall water usage. Effluent BOD concentration has increased approximately 100 percent as a result of the decreased water consumption. However, the total BOD load has decreased approximately 60 percent. Increased grease concentrations and the lower hydraulic loading have improved the grease recovery operations somewhat.

In general, plant management feel that the cost invested in new equipment has been more than recovered through decreased labour requirements, improved product and byproduct recovery and reduced water and waste treatment costs. No documentation of costs is available as this has been completely an internal program.

Despite the fact that this is a relatively old plant and problems exist due to space limitations, the results demonstrate the feasibility of upgrading an older facility to a highly efficient operation in terms of product quality, automation and water usage.

Case History 4

In this Eastern United States poultry processing operation, well water supplies were not adequate to allow a production increase from the present capacity of 50 000 birds per day. Therefore, under funding by the U.S. EPA, the feasibility of combining in-plant water conservation with a wastewater reclamation and reuse program has been investigated. The goal was to decrease water consumption from the initial level of approximately 42 litres/bird and demonstrate that treated wastewater could be reused on a 50/50 basis with well water in the process.

This program is obviously much more comprehensive than simple in-plant water and waste management. However, it is included in this section as wastewater reuse is the ultimate goal in attempting to reduce effluent discharges from processing.

It is emphasized that this has been an experimental program. The renovated wastewater, although thoroughly tested to demonstrate that it would be acceptable in the process, has not been recycled due to objections from the U.S. DA. The implications of wastewater reuse in food processing operations will be dealt with after a review of the process and wastewater system.

The in-plant water conservation program included many of the basic steps discussed in Section 4.2 such as:

- an employee awareness program directed toward water conservation,
- elimination of leaks in the piping system,

186

- installation of automatic shut-off valves on all essential hoses,
- installation of flow regulating valves on all supply lines,
- dry cleanup followed by high-pressure wash-down using a portable cleaning system,
- recycle of refrigeration compressor water to the raw water section of the water treatment plant,
- recycle of chiller overflow to the scalder,
- valving in the water treatment plant to closely control filtration rates and eliminate water pressure variations in the distribution section.

These relatively minor modifications resulted in a reduction in water use of approximately 38 percent to an average level of 25.7 litres/bird.

The wastewater treatment system consisted of rotary screens, and two aerobic lagoons in series prior to chlorination and discharge to the receiving waters. Approximately one-half of the treated wastewater (19 L/s) was diverted to the water renovation system which consisted of the following stages:

- microstraining with 35 micron screen cloth,
- flocculation with 86 mg/L alum and 86 mg/L lime and gravity clarification,
- sand filtration,
- breakpoint chlorination.

The wastewater renovation system is shown schematically in Figure 30. The renovated wastewater to be mixed with the well water supply on a 50:50 basis prior to the conventional water treatment system which includes prechlorination, alum-lime flocculation and clarification, sand filtration and final chlorination prior to distribution.

Considerable testing of the renovated water quality was carried out during the experimental study. The water was shown to meet federal drinking water standards for chemical, microbiological and physical constituents. Further testing for such constituents as pathogenic microorganisms, heavy metals, pesticides and toxic organic constituents showed that there should be no significant risk in reusing the water in the process. Experimental exposure of bird carcasses to the reclaimed water verified these findings.

The costs for the waste treatment and renovation systems were as follows (Clise, 1974):

Capital Cost:	Wastewater treatment (excluding land)	$ 84 000.00
	Water Renovation System	$ 89 998.50
	TOTAL	$173 998.50

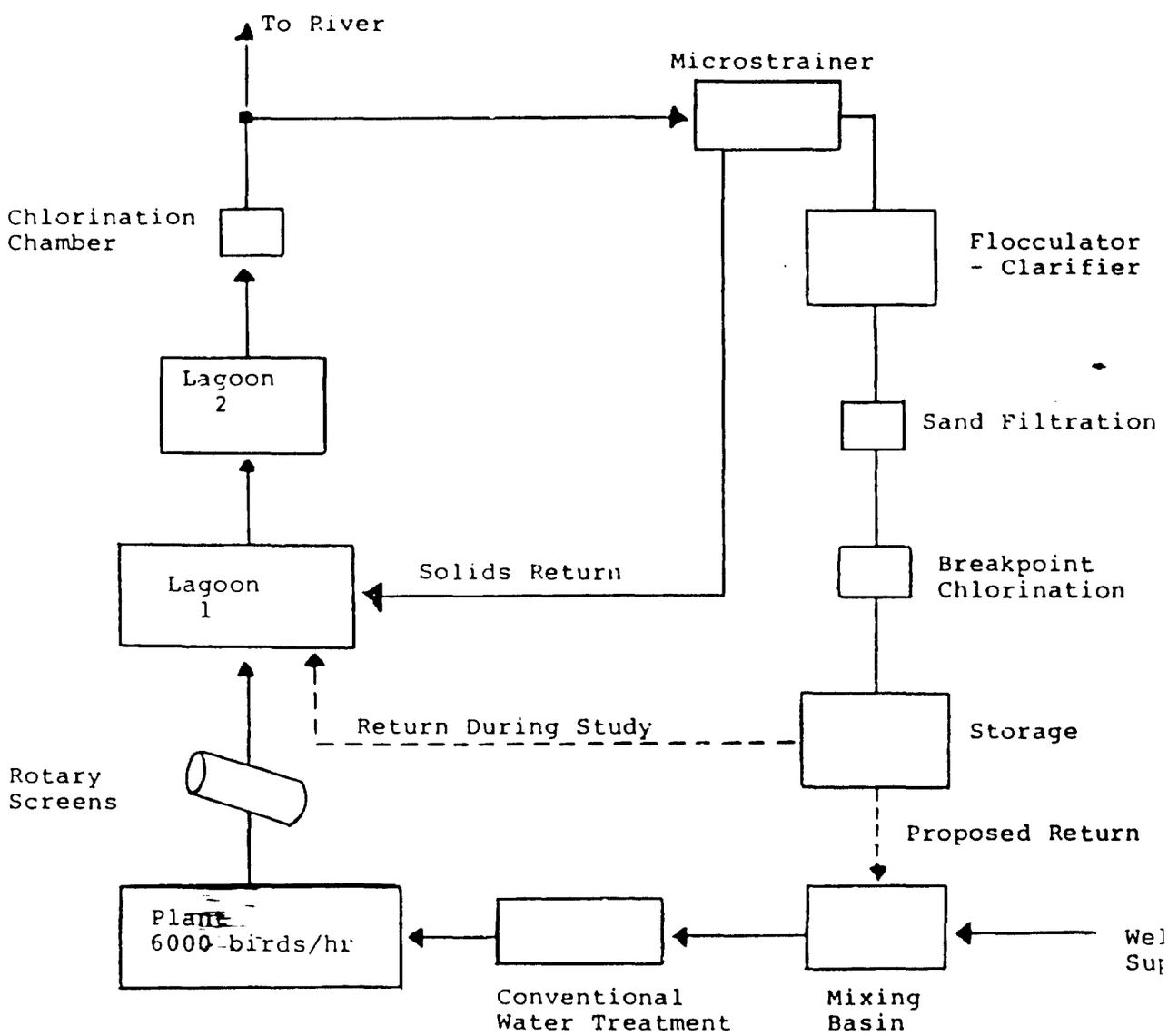

FIGURE 30 WASTEWATER RENOVATION SYSTEM (From Andelman and Clise, 1977).

Annual Operating Cost:

Wastewater treatment	$ 22 658.75
Water Renovation System	$ 19 476.77
TOTAL OPERATING COSTS	$2.22/1000 kg LWK.

Despite the recommendation that renovated water be introduced experimentally into the process, this step had not been taken at the time of writing this report. The major problem has been the U.S. DA requirement that water to be used in the plant be potable. In the United States, potable water, by definition, must be obtained "from the most desirable source which is feasible, and effort should be made to prevent or control pollution of the source". This requirement severely limits the reuse of renovated wastewater in poultry operations regardless of the ultimate quality of the water. Thus, the final step to demonstrate that renovated wastewater can be used in such applications without any discernible risk to the consumer has not as yet been taken.

11.3 Water and Waste Management in the Dairy Industry

Case History 5

The U.S. Environmental Protection Agency (U.S. EPA) is presently funding an intensive water and waste conservation program in a large American integrated milk processing plant. The study is in its early stages, but some preliminary information is worth reviewing to illustrate the potential savings in water consumption and reductions in product losses which can be attained.

The dairy products plant under study processes approximately 500 000 kilograms of milk per day, primarily for milk packaging, cottage cheese and ice cream production. At the start of the study, water usage averaged approximately 3.3 litres per kilogram milk or milk equivalent processed.

Process effluent loading was approximately 5 kg BOD per 1000 kg milk or milk equivalent processed. Based on nine months of in-plant surveys, product losses are estimated at approximately 5 percent of plant throughput. The initial goal is to reduce water consumption to approximately 1.7 litres per kilogram M.E. and organic load to 3 kg BOD/1000 kg M.E. The ultimate goal is to demonstrate the minimum water and waste loadings economically attainable. Study personnel feel that levels of 0.81 water per kg M.E. and 1 kg BOD per 1000 kg milk equivalent are attainable. For comparison purposes, the best combination dairy products plant in the United States uses water at a rate of 0.8 litres per kg M.E. and discharges 1.5 kg BOD/1000 kg M.E.

The economic implications of reducing discharges to the initial goal levels have been demonstrated to plant management. At this particular plant, the surcharge

savings represent approximately $21 000 annually. More significantly, the increased product recovered represents approximately $200 000 annually.

The first step in the program involved the employment of a water manager who is responsible solely for co-ordination of the program and implementation of the various water management steps. This step is extremely important to the success of an in-plant control program.

The next step involved the installation of a computer to delineate water usage by area and rate of production and provide rapid automatic feedback of the conditions in the plant and the success of the program. The linear program model is based on a methodology developed at Ohio State University. Although developed specifically for the dairy industry, it is readily adaptable to any other process application.

At present various in-plant steps are being implemented to reduce water in the most obvious wastage areas. Some modifications have been made and the results are as follows:

- Cleaning of pasteurizers was a manual operation which used from 68 to 680 m^3 of water, depending on the operator. Automatic control of the cleaning procedure was implemented to reduce water usage to the minimum required consistent with sanitary conditions.
- Water usage on the ice cream novelty line was controlled by a system of metal floats. However, the low pH in the system rapidly reduced the control efficiency. The simple installation of plastic floats reduced water usage in this area by almost 90 percent.
- Separators were operating on a continuous water basis and utilizing as much as ten times the necessary volumes of water. The installation of automatic solenoid switches greatly improved water usage in this area.

The total daily savings in water from these and similar simple steps has been some 400 m^3, approximately 25 percent of the pre-study level.

Discharges from the cottage cheese process represent approximately thirty percent of the effluent load. Whey is not recovered at this plant at present. In this area, the plant is investigating methods such as centrifugation and filtration to recover cheese fines which represent a significant portion of the whey BOD. The plant is also planning to utilize whey as a substrate for the production of baker's yeast which will reduce the organic load from whey by some 30 to 40 percent. The yeast would be utilized by a company-owned bakery which presently buys large quantities of yeast.

190

Although the program is in its early stages, it is evident that significant savings can be realized by programs of this nature. Although zero discharge may not be a feasible goal in industries such as dairies which require a high degree of sanitation, considerable improvement in water use practices is attainable.

11.4 Water Management and Reuse in Fruit and Vegetable Processing

Two case histories of water management in the fruit and vegetable industry are reviewed. In the first example, a California vegetable processor, through management commitment to reduce water usage wherever possible, has become a model for the industry. In the second example, a Washington fruit canner has demonstrated that process effluents can be upgraded to allow reuse which, in conjunction with in-plant waste management, can substantially reduce total water consumption in the process.

Case History 6

In 1955, the plant discharged approximately 400 m^3/day to the local municipal water pollution control plant. As product tonnage increased approximately five-fold in the next three years, process water usage increased to 1600 m^3/day. Local pressure forced plant management to implement water conservation measures to reduce discharges.

The first approach to in-plant control was reuse and recycle. This reduced water usage by 25 percent but the increased water-solids contact increased the organic strength of the waste from 1500 mg/L to 4000 mg/L BOD. The second approach was based on dry handling wherever possible as a replacement for hydraulic systems. The following process modifications were made:

- Hydraulic trimming and fluming equipment was replaced by dry solids handling systems.
- Cooling of blanched product by immersion in a cooling bath replaced flume water cooling.
- Dry cleanup in production areas. No water is available for washdown until the shift foreman is satisfied with the dry cleanup.
- Evaporative cooling is used for containers to reduce water usage.
- Blancher water is reused for five days prior to discharge.
- The acid bath used to prevent enzymatic browning is reused for one complete day of production.

In addition, the process effluent was segregated into three streams:

- Low strength water from jar cooling is discharged directly to sewer (20 m^3/day at 50 to 80 mg/L BOD).
- Medium strength waste from wash-up, dumping of batch cooling water, etc. is discharged through a 40-mesh vibrating screen to a dissolved air flotation unit to remove residual oil and solids and then biologically-treated (100 m^3/day at 1000 to 1500 mg/L BOD).
- Concentrated wastes from the blancher, which is reused for five days, are treated in the biological system.

This segregation has vastly improved the efficiency of the pretreatment systems.

In most cases, equipment modifications and even the design of new equipment such as the trimming system was done by plant personnel as this is the only company of its kind in North America.

The success of the program is readily apparent by comparison of water use data. In 1956, the plant discharged 1600 m^3/day at a production throughput of 1820 to 2730 tonnes/year. Today, the total plant discharge is approximately 100 m^3/day at a production rate of 18 180 tonnes/year. The plant has reduced water usage in excess of ninety percent while increasing production approximately ten-fold.

Plant personnel have applied two basic principles of waste management:

1) Avoid water-solids contact wherever possible.
2) If contact is necessary, separate the solids from the water stream as soon as possible.

The reduction in water and waste loading is felt directly in the capital and operating cost of the waste treatment facility. Plant personnel estimate that the present cost of waste treatment is only 28¢ per tonne of raw material.

Case History 7

The plant processes pears for approximately nine weeks at a rate of 250 metric tons per day, peaches for one week at a rate of 250 metric tons per day, apples for 15 weeks at 100 metric tons per day and varying amounts of plums, cherries and apricots. The plant has maintained a good record of water and waste management. However, concern regarding lowering ground water levels led plant management to evaluate alternate supplies to augment the existing wells. For the past three seasons, the plant has

been experimentally reusing treated wastewater in the process during apple and pear canning seasons.

An activated sludge system operated in the contact stabilization mode is used for process effluent treatment. The basic design criteria are as follows:

Flow:	10 000 m^3/day		
Organic Load:	12 700 kg BOD/day		
Aeration Basin:	Volume	-	22 700 m^3
	Aeration Power	-	290 kW
Clarification:	Surface Loading	-	16 m^3/m^2/day
Sludge Reaeration:	Volume	-	5700 m^3
	Aeration Power	-	45 kW

A multi-media pressure filter was installed to upgrade effluent quality for reuse in the process. The filter operated at a hydraulic load of between 285 and 410 L/m^2/min. Filter media are anthracite and silica sand. The biologically-treated effluent can be treated with alum prior to filtration if necessary. Renovated water is chlorinated to a one-hour total residual of 3 mg/L prior to reuse.

During the study, the reclaimed water was used for varying periods of time in the following areas of the plant:

- equipment cleaning in the initial cleaning areas,
- raw product conveying and cleaning,
- container cooling,
- boiler feed for steam generation to be used for cleaning, exhausting, cooking and blanching.

The results of the study indicate that reclaimed water can be reused in all of the areas investigated except the production of steam for direct contact exhausting, cooking and blanching without affecting product quality. However, the operation of the water renovation system depends completely on the efficiency of the biological treatment process. Some problems were encountered in this area due to the toxic effects of chlorine used in plant cleaning operations. Shock loads of chlorine upset the biological treatment system resulting in excessive solid loading to the polishing filters.

During the study, the proportion of wastewater reused was approximately 35 percent. It is projected that up to 50 percent of the process effluent could potentially be reused during pear processing and a higher percentage during apple processing. The cost of reclaiming water is approximately \$0.20/m^3, including amortization. The development

193

of a new well to supply the same amount of water would have cost about $0.085/m^3. The cost difference is primarily due to the larger capital investment in the renovation system. However, the reclamation scheme will allow the cannery to meet the BATEA discharge standards due to the fifty percent reduction in discharge to the receiving waters.

It is important to consider the site-specific nature of the water reuse practice at this cannery. The product is a high-acid fruit preserved by heat-treatment in hermetically sealed containers. The high acid nature of the product naturally inhibits the growth of microorganisms. Such water reuse practices may not be directly applicable to low-acid food products or foods not subjected to terminal thermal processing. Furthermore, no sanitary wastes are discharged to the waste treatment facility. Such practices would severely limit any reuse of wastewaters.

11.5 Water and Waste Management in the Beverage Industry

Case History 8

Management of this Western United States brewery initiated a program of in-plant water conservation and waste material recovery in 1951 at the time that an activated sludge effluent treatment facility was being constructed. Process effluent loadings are substantially less than the industry mean as demonstrated from the following data:

	Industry Mean*	Plant
Process Effluent Volume (m^3/m^3 beer)	6.9	3.5
Effluent BOD Load (kg/m^3)	10.4	2.9
Effluent Suspended Solids Load (kg/m^3)	4.2	1.0

*From Joyce et al, (1977)

Throughout the process, which includes a malting facility, care is taken to minimize water usage, prevent losses of solids and liquids to the sewer and recover the solid waste as animal feed products. Some of the waste conservation measures include:

- Malt sprouts and screenings, spent grains, hops and trub solids are recovered, dried and pelletized for marketing as an animal feed.
- Liquor separated from the spent grains is recycled to the rice mash-in operation.
- Liquor separated from the trub and hops is recycled into the brewing process.
- Waste beer from the packaging operation is concentrated along with yeast in a double effect evaporator to produce a cattle feed product.
- Cleaning water is recycled by means of segregated CIP systems.
- Cooling water is reused.

estimated that the in-plant programs have resulted in a total savings in capit of waste treatment facilities of $1 575 000. Operating cost savings are estimated at $1 457 000 annually. The conservation programs have been expanded to include energy and solid wastes such as glass, aluminum and wood and paper products.

The brewery is presently experimenting with the conversion of primary clarifier solids and waste activated sludge into a marketable feed product, brewer's single cell protein. A four-stage Carver-Greenfield evaporator has been installed to dry the waste solids from the effluent treatment plant. The drying system was designed and constructed entirely by brewery personnel. The final prduct contains in excess of 30 percent protein and is high in vitamin B_{12}. Ultimately, 14 tonnes per day of the animal feed supplement could be produced. At present, sanitary wastes are discharged with process effluent to the waste treatment facility. This waste stream must be separated before the product can be marketed.

The techniques used in this brewery to reduce water consumption and recover valuable byproducts are directly applicable to other malt liquor production facilities. The reduction in waste treatment costs alone provide strong economic incentive for such programs.

12 PHYSICAL-CHEMICAL TECHNOLOGIES FOR WASTEWATER TREATMENT AND BYPRODUCT RECOVERY - SELECTED CASE HISTORIES

Physcial, physical-chemcal and advanced treatment technologies can be applied to food processing liquid effluents with four basic objectives as follows:

- recovery of byproducts from waste streams,
- pretreatment of waste streams prior to discharge to municipal sewers or subsequent treatment processes,
- polishing of treated effluents prior to discharge to receiving waters or recycle to processing lines,
- complete treatment of waste streams prior to discharge to receiving waters or recycle to processing lines.

Physical treatment processes such as screening, clarification and air flotation are commonly applied for pretreatment prior to biological oxidation of process wastes or discharge to municipal sewer systems. Physical-chemical alternatives can be economically competitive with biological systems for treatment of process wastes in some situations. However, the present economics of advanced treatment systems, such as membrane processes, are such that they are normally applied only when a marketable byproduct can be recovered from a concentrated waste stream.

In this section of the manual, several case histories involving the application of these technologies to food processing effluents are reviewed. As the feasibility of physical-chemical treatment processes is strongly influenced by the recovery of a marketable product or byproduct from the waste stream, particular emphasis has been given to such systems.

12.1 Screening of Food Processing Effluents

The use of extremely fine screens has been avoided in the food processing industry due to the operational problems associated with blinding of the screens. In the poultry industry, screens for pretreatment applications typically have openings of 250 microns to 1500 microns. The units are employed to remove coarse solids with minimal blinding problems.

Recently several food processors have installed Sweco Centrifugal Screen Concentrators for pretreatment of process effluents. These units are operating with screen openings ranging from 44 microns (325 mesh) to 105 microns (165 mesh). Significant improvement in pretreatment efficiency and solids recovery has been attained with these units.

Case History I

This Southern Ontario poultry processor installed a Sweco Centrifugal Screen Concentrator (CSC) system in 1976 to reduce process effluent loadings in response to the municipal sewer bylaws. The plant is a relatively old facility built in the 1930's which has been updated and progressively modernized to the present production capacity of some 1800 birds per hour. The plant processes turkeys and turkey hens.

Processing is typical of Canadian poultry operations. Water usage is relatively high. Plant effluent flow ranges from approximately 900 to 1100 m^3/day. Process effluent contains significant quantities of blood which are presently lost from the killing area. Offal and feathers are separated from flume water by screw conveyors for transport to an independent renderer. These systems add significant quantities of contaminants to the process effluent. Average process effluent quality prior to treatment is typically 700 mg/L suspended solids, 600 mg/L grease and 800 mg/L BOD.

The CSC treatment system is shown schematically in Figure 31. Process effluent is delivered by level-controlled lift pumps from a wet well to a 75 cm centrifugal separator equipped with 325-mesh stainless steel screen cloth. The solids slurry from the primary separator is pumped to a 30 cm CSC (325 mesh) for further dewatering. The screened effluents from both units flow by gravity to a flotation cell with a design hydraulic retention time of three minutes. Grease and dispersed solids are separated and collected by a timed mechanical surface scraper. There is no external air supply to the flotation cell. Separation is induced by the dissolved and dispersed air in the influent stream created by the turbulence in the screen separators. Treated effluent is discharged to the municipal sewer.

The sludge stream from the 30 cm CSC is discharged to a 200-mesh 120 cm vibrating screen (Sweco Vibro-Energy Separator). Recovered solids, mixed with float from the flotation cell, is sold along with offal and feathers to an independent renderer. The liquid effluent from the vibrating screen is recycled to the process effluent wet well.

Suspended solids and grease in the final effluent are removed to levels consistently below the bylaw limits of 350 mg/L and 100 mg/L, respectively. Suspended solids concentrations average approximately 200 mg/L. Grease concentrations are approximately 50 mg/L. There have been some problems in reducing the BOD of the effluent to the required 300 mg/L. These problems are primarily due to high blood concentrations which are unaffected by the treatment system. An improved blood recovery and handling system is being considered to reduce the process effluent BOD.

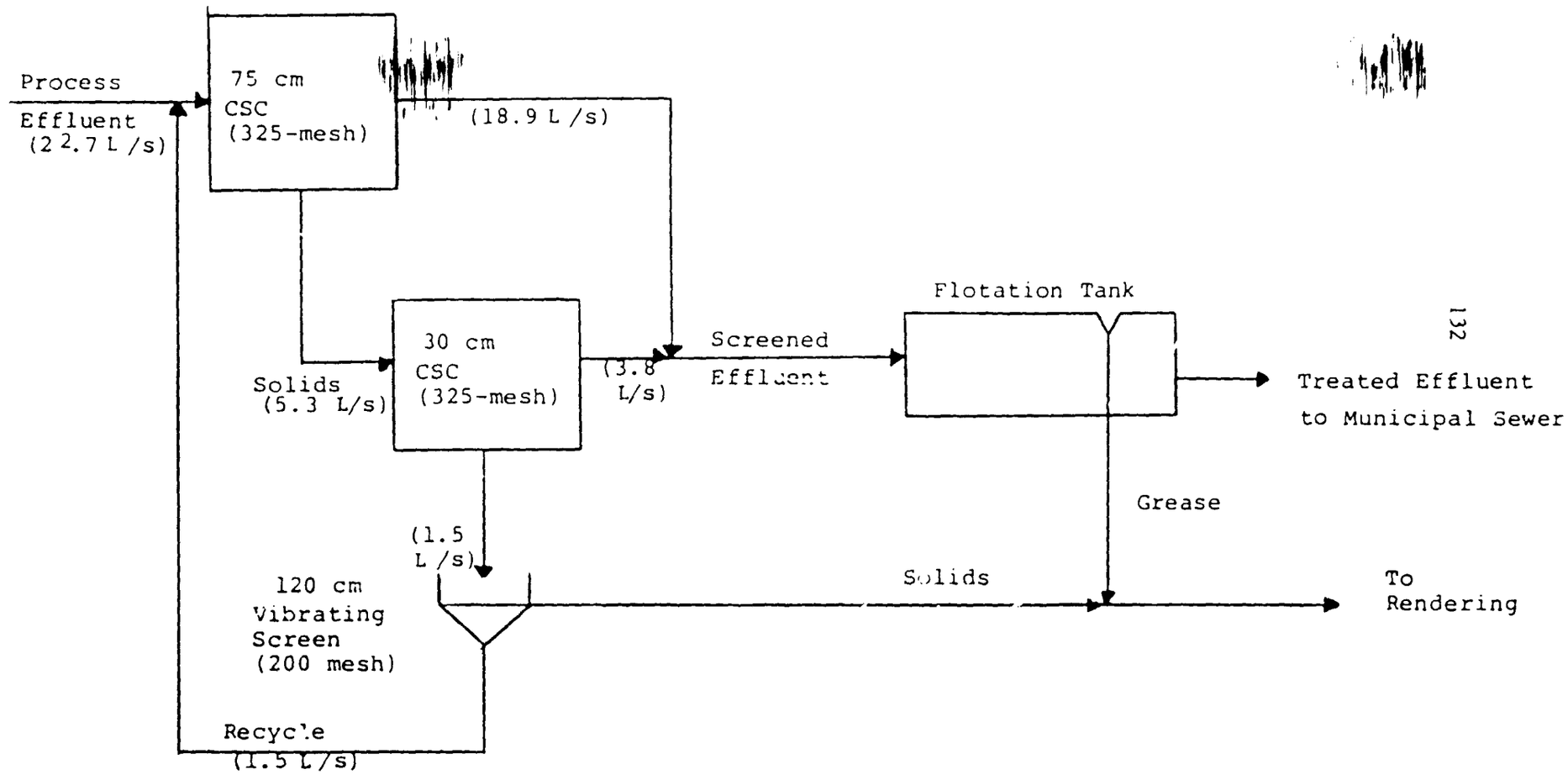

FIGURE 31 SWECO CSC TREATMENT SYSTEM FOR POULTRY PROCESSING EFFLUENT

There have been some blinding problems with the screens, particularly during the processing of turkey hens, despite the use of timed hot and cold water backwash cycles. The screen panels are removed every two weeks for a thorough cleaning with detergent and caustic solutions. Two sets of screen panels are kept in the plant to facilitate the cleaning program. Backwashing with a dilute caustic solution is being investigated as a means to reduce the blinding problems during periods of high grease discharges. Furthermore, the screens are susceptible to breakage from the impact of hard particulate matter such as gizzard stones.

The Sweco CSC system was considered the most feasible alternative for this particular application. Total installed cost of the system was approximately $100 000 (1976). Capital costs for other alternatives were estimated to be two to three times higher. The Sweco system is compact and was easily installed in a relatively small space within the existing plant. Operating costs are minimal as no chemicals have been required to meet the discharge requirements. The system can, however, be readily adapted to include flocculant addition if it becomes necessary.

This approach has been used in other applications. Furthermore, minimal operator attention is required, except during periods of high grease discharge.

The Sweco CSC system appears to be capable of maintaining good treatment efficiency at low cost. Plant management feel that the cost of the system will be rapidly recovered by the savings in sewer surcharges. Similar full-scale systems are being successfully operated on fish processing effluents and vegetable processing wastes. In one of the fish processing applications, treatment efficiency is improved by the use of alum, lime and anionic polymer resulting in BOD, suspended solids and grease reductions in excess of 80 percent.

12.2 Dissolved Air Flotation of Food Processing Effluents

The efficacy of dissolved air flotation, with and without chemical addition, has been well demonstrated in most food processing applications. Full-scale installations for the removal and recovery of grease and suspended matter from meat, poultry and rendering, fruit and vegetable, edible oil, and fish and seafood processing wastes are relatively common. Most systems have been designed to provide pretreatment of process effluents, with recovery of byproduct, prior to further biological treatment.

Unfortunately, many such installations do not operate up to expectations due to the lack of adequate operator control. Dissolved air flotation efficiency is strongly dependent on such parameters as hydraulic and solids loading, air to solids ratio, skimming

depth and frequency, chemical dosage and control of turbulence in the flotation cell. The process requires considerable pilot-scale testing and close control in full-scale operation to realize its advantages relative to gravity sedimentation.

Three case histories are reviewed to illustrate the factors which should be considered in the selection of dissolved air flotation for the treatment of food processing effluents.

Case History 2

This case history reviews the design and operation of a dissolved air flotation system and the associated byproduct recovery program at a modern, high volume edible fat and oil refinery. The plant receives bulk shipments of unrefined vegetable and animal oils for processing. There are no pressing or extraction facilities. Plant capacity is approximately 500 000 kg of edible oil per day on a 24-hour, seven-day per week schedule. Conventional processing includes caustic refining, bleaching, hydrogenation for margarine and shortening manufacture, and deodorization.

Process effluent flow averages approximately 19 L/s, equivalent to about 1600m^3/day. The effluent characteristics are highly variable in terms of pH, temperature, and contaminant loading. However, the average quality is approximately as follows:

pH	-	9.0
Suspended Solids	-	3700 mg/L
Ether Extractable FOG	-	4000 mg/L
BOD	-	4000 mg/L

Effluent from the process is pumped to two quiescent surge tanks from which readily separable oil can be manually decanted. The pH is adjusted to approximately 7.0 and further oil removed in a rectangular skim tank. The skim tank provides approximately 46 minutes retention at 19 L/s and is equipped with continuous surface scrapers for grease removal. The unit removes approximately 30 to 40 percent of the raw waste grease, suspended solids and BOD. However, the skim tank has no

The effluent from the flotation unit typically is reduced to 400 mg/L suspended solids, 350 mg/L ether soluble oil and grease and 750 mg/L BOD for discharge to the municipal sewer system. This represents removals in the range of 70 to 90 percent. However, there have been periods of excessively high oil and grease discharges, particularly during winter months. The treatment units are not enclosed and cold weather conditions interfere with scrapers and cause problems in handling the recovered grease. Furthermore, excessive turbulence is evident in the flotation cell which reduces treatment efficiency by disturbing the floated grease layer.

Considerable work has been done at this plant to recover the oil from the skim tank and flotation cells. Some 3200 kg of grease are recovered daily. A system was developed which involved pH adjustment, followed by treatment in a cyclone to remove grit and sand and centrifugation in a disc stack-type machine to recover a purified oil. Despite economic evaluations indicating costs could be recovered by the sale of this material for soap manufacture, the oil recovery system has been abandoned. Excessive wear in the centrifuge was found to severely limit the possible operating time and significantly increase operating costs. The recovered oil phase is presently manually decanted and sold to an inedible renderer for $0.03 to $0.04 per kilogram. A high quality oil recovered by centrifugation could have been marketed at prices of $0.22 to $0.30 per kilogram.

There is no information available regarding capital costs of the waste treatment system as it has been installed in stages over a number of years. Operating costs were estimated during the evaluation of the oil recovery scheme. The waste treatment plant operating costs were approximately $328/day (1973 U.S. $). Chemical costs represented approximately 40 percent of these operating costs.

Case History 3

Under the sponsorship of the U.S. EPA, considerable work has been done on the evaluation of dissolved air flotation for the treatment of shrimp cannery wastewaters. These studies have included a full-scale demonstration at a Louisiana shrimp cannery. The demonstration plant is designed to handle 44 L/s of shrimp cannery wastes in a multi-mode dissolved air flotation unit. A wide variety of chemicals and chemical dosages have been evaluated during investigation.

The dissolved air flotation cell can be operated in complete influent pressurization, partial influent pressurization and recycle pressurization modes. A separate surge tank with pH adjustment to between 4.5 and 5.0 and a flocculation tank are provided.

Optimum treatment efficiency in terms of BOD removal has been obtained in the recycle mode with alum (283 mg/L) and anionic polymer (7.5 mg/L) addition. The treatment efficiencies were as follows:

BOD Removal	..... 64.6 percent
TSS Removal	..... 64.8 percent
FOG Removal	..... 83.6 percent

Average raw waste concentrations were 1070 mg/L BOD, 505 mg/L TSS and 115 mg/L FOG.

The unit produced minimal removals of BOD and grease when operated without chemical addition.

Capital cost of the system was approximately $282 000; however, this particular system, due to its demonstrational nature, is considerably more complex than would be required in an actual plant. Operating costs represent approximately $0.80 per m^3, exclusive of sludge disposal. Sludge disposal increases the operating costs to approximately $1.12 per m^3 treated.

The handling of the recovered solids from the dissolved air flotation unit remains the most serious problem. The float from the demonstration plant contains approximately six percent solids. This material is highly putrescible and can create serious odour problems due to storage. Few shrimp canners or small fish processors operate meal plants which could recover this material.

Furthermore, the recovered solids contain a high chemical content which may have an adverse effect on a meal operation. There has been little work done on dewatering of these sludges to reduce disposal costs. Thus sludge handling and disposal contribute significantly to the operating costs of the system.

Case History 4

Effluent limitations for the American tuna processing industry are based on dissolved air flotation as BPCTCA. A western United States tuna processing complex has operated dissolved air flotation units for several years to provide pretreatment of process effluents. The processing complex includes three tuna canneries producing canned tuna for human consumption and pet food, a wet fish plant processing mackerel for human consumption and anchovies, mackerel, squid and tuna offal for pet food. There is also an associated byproduct recovery plant to handle viscera, bones, heads and scraps for the production of pet food.

There are three dissolved air flotation systems, two treating tuna processing effluents and the third treating effluent from the wet fish plant. The wet fish plant system handles approximately 3000 m^3/day in a circular, total flow pressurization unit. Alum at 40 mg/L and anionic polymer at approximately 2 mg/L are dosed to the influent. Treated waste, containing approximately 1000 mg/L BOD and 300 mg/L suspended solids, is discharged to the municipal treatment plant. Treatment efficiency averages approximately 60 percent BOD removal and 90 percent suspended solids removal.

The flotation system at tuna plant 1 consists of two circular flotation cells in parallel. The units operate in a recycle pressurization mode at a recycle rate of 20 to 25 percent. Equalization is provided in a 800 m^3 surge tank. Influent flow is controlled in the range of 16 to 60 L/s. Sodium aluminate is used as flocculant at a dosage of 50 mg/L. Anionic polymer is added as a coagulant aid at a dosage of 2 mg/L.

The flotation system at tuna plant 2 is similar to the wet fish plant system. The unit operates in the total flow pressurization mode using alum (40 mg/L) and anionic polymer (1.0 mg/L). A 1100 m^3 surge tank controls flow to the unit within the range of 25 to 125 L/s.

The treatment efficiencies from the two units are summarized in the following table:

	Tuna Plant 1		Tuna Plant 2	
Parameter	Effluent Concentration (mg/L)	Average Percent Removal	Effluent Concentration (mg/L)	Average Percent Removal
BOD	1300	43	670	24
Suspended Solids	260	75	200	48
Oil and Grease	70	84	40	64

Recovered solids from the flotation units are landfilled. Centrifuges are installed at both tuna plants to dewater the sludge but are not used. Consideration has been given to recovering the solids for the pet food operation. Problems in this area relate to the presence of various cleaning and flocculation chemicals in the sludge. One of the tuna plants evaluated a two-stage flotation system in which some of the effluent solids are recovered in a primary flotation cell without chemical addition. However, the flotation efficiency without chemicals is very poor.

In general, water usage in these plants is very high. The treatment systems handle only part of the total wastewater flow. Transport water and thawing water are disposed of at sea. Cleaning shifts wash substantial amounts of blood and scrap to the sewers. Due to the location of the processing plant on the ocean, there has also been a vast supply of cheap water for the operation. However, the plants are now paying substantial surcharges for treatment of the high BOD load at the municipal treatment plant. These increasing costs are resulting in more concentrated efforts for in-plant control of water usage and waste generation.

12.3 Electroflotation of Food Processing Effluents

Swift Environmental Systems Company has done considerable development work, particularly in the food industry, on electroflotation. The proprietary process has been marketed under the name Lectro-Clear. Full-scale systems have been installed in meat, poultry and rendering operations and pilot-scale testing has been done on fish processing and confectionary wastes.

In the conventional Lectro-Clear process, ferric sulphate is added to the raw waste to reduce the pH to approximately 5.0, precipitating proteinaceous matter. The precipitation-coagulation process occurs in a contact cell containing a number of submerged electrodes which produce gas bubbles by the electrolysis of water. The minute bubbles are entrained during floc formation.

Subsequently, polymer is added and the flocculated waste flows to the flotation cell. Flotation is induced by another bank of electrodes generating minute hydrogen and oxygen bubbles. Sludge is removed by a mechanical scraper mechanism and treated effluent is discharged. Facilities are normally provided to feed a dispersed air stream to the contact cell and dissolved air in a recycle stream to the flotation cell. Lime can also be added to raise the flotation cell influent pH to approximately 7.0 prior to polymer addition or alternately to neutralize the flotation cell effluent prior to discharge. A schematic flowsheet of a conventional Lectro-Clear system is shown in Figure 32.

Modifications to the conventional Lectro-Clear process include Lectro-Clear ZM and Lectro-Clear Z. Lectro-Clear Z operates without the addition of flocculants and coagulants. Acid is used for pH adjustment to the protein isoelectric point. Lectro-Clear Z typically produces higher float solids concentration than the conventional process; however, effluent quality is normally poorer and power requirements are higher. Lectro-Clear Z produces a sludge free of metal coagulants and organic polymers which can be

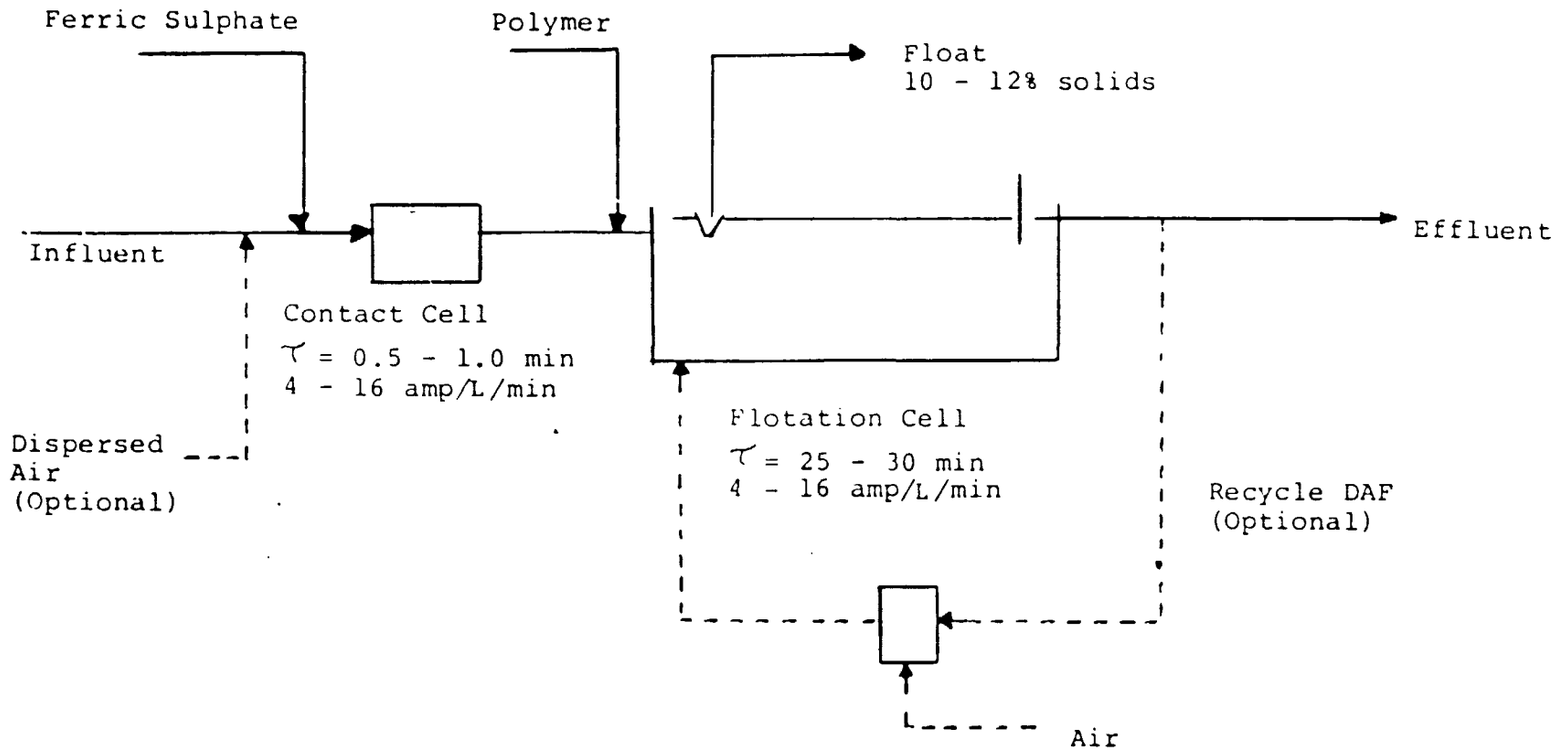

FIGURE 32 SCHEMATIC OF LECTRO-CLEAR* TREATMENT PROCESS

*Trade Mark: Swift Environmental Systems Company, Division of Swift and Company.

205

advantageous in subsequent byproduct recovery. Lectro-Clear ZM utilizes both acid and metal coagulant to reduce the effluent pH. With this modification, costs and process efficiency are typically between conventional Lectro-Clear and Lectro-Clear Z.

Two case histories involving electroflotation are reviewed. The first system is a conventional Lectro-Clear unit treating meat packing wastes. The second system is a Lectro-Clear ZM unit for process effluents from a rendering operation. In both cases, the units were installed to provide pretreatment prior to discharge to the municipal sewer system.

Case History 5

The meat packing plant slaughters some 400 to 450 animals per day, five days per week. There is an associated rendering operation producing a high grade white tallow and animal feed products. Total water usage is approximately 1500 m^3/day. The plant originally operated a trickling filter and disposed of the effluent by spray irrigation during the summer months. A mixed 340 m^3 surge tank was provided to equalize flow and reduce peak organic loadings. Readily separable solids and grease were removed in a conventional catch basin prior to the trickling filter. With the construction of a municipal water pollution control plant, it was deemed advantageous to pretreat process effluent and discharge to the municipal sewer system.

A conventional Lectro-Clear system was installed to meet the pretreatment requirements. Design flow for the system is 38 L/s to allow for future expansion. The plant is presently operating at a flow of 19 L/s, 20 to 22 hours per day. The equalization tank is used to maintain constant flow to the system. The catch basin removes some grease and solids prior to the flotation system.

Although designed for ferric sulphate coagulation, the plant is operating with alum due to economics. Alum dosage is controlled to maintain an influent pH of approximately 6.0 prior to the contact cell. Retention time in the cell is approximately one minute. A 12-volt, 1700-amp current is supplied to the Duriron contact cell electrodes. Anionic polymer is added at a dosage of 2 mg/L prior to the 48 m^3 flotation cell. Power supply to the flotation cell electrode bank is in the range of 4 to 15 amp/litre/min. Power can be manually varied to change the rate of bubble production depending on the efficiency of the treatment system.

The effluent from the flotation cell typically contains less than 300 mg/L BOD and less than 100 mg/L suspended solids and oil and grease, equivalent to a removal of 80 to 90 percent from the raw influent. Float solids are typically in the range of 10 and 12

percent. These solids are presently combined with the waste material from the catch basin and disposed of at a landfill site. Processing of these materials in the rendering operation results in an undesirable deterioration in the quality of the tallow produced.

There have been no major operating problems with the system since its installation. A full-time operator is responsible for the plant. A major operating expense associated with the system will be the replacement of electrodes. Electrode life is estimated at two to three years. Capital cost of the system including the building was approximately $350 000 (1976 U.S. $). There is no information available regarding operating costs.

Case History 6

This is the largest rendering operation in North America producing meat and feather meal and dry rendered tankage as well as bleachable fancy and prime tallow in a continuous operation. Carver-Greenfield equipment is used, including a modern triple effect evaporator. Processing is typical of a large modern renderer. Raw material is unloaded, crushed, cooked and evaporated prior to centrifugation to separate tallow from the solids. The solids are pressed, dried, ground and bagged for marketing. Tallow is clarified, quality tested and bulk shipped.

Clean cooling water, 2700 m^3/day, is discharged directly to the sewer. Process water, 800 m^3/day, is treated in a Lectro-Clear ZM system. A schematic flowsheet of the system is shown in Figure 33. Effluent is collected in a 80 m^3 surge tank and fed to the system by level-controlled pumps at a constant rate of approximately 15 L/s. The pH in the surge tank is adjusted to 4.2 to 4.5 with sulphuric acid if ferric salts are used for coagulation. Presently alum is used and the pH is maintained in the range of 5.0 to 5.5. Alum at 150 mg/L is dosed to a mix chamber prior to the electrolytic contact cell. A dispersed air source is also installed but is not in use. Anionic polymer is added at a dosage of 10 mg/L immediately prior to the flotation cell. In addition to the electrolytic gas generation, dissolved air is provided through an effluent recycle pressurization system. Treated effluent is neutralized with sodium hydroxide prior to discharge.

There is little information available regarding the treatment plant performance as the system has operated only intermittently during the past several months. Minimal sampling data indicate reductions in BOD from 9700 mg/L to 2800 mg/L, in suspended solids from 2800 mg/L to 324 mg/L and in oil and grease from 1200 mg/L to 64 mg/L. The process effluent contains high concentrations of soluble BOD which are relatively unaffected by the treatment system.

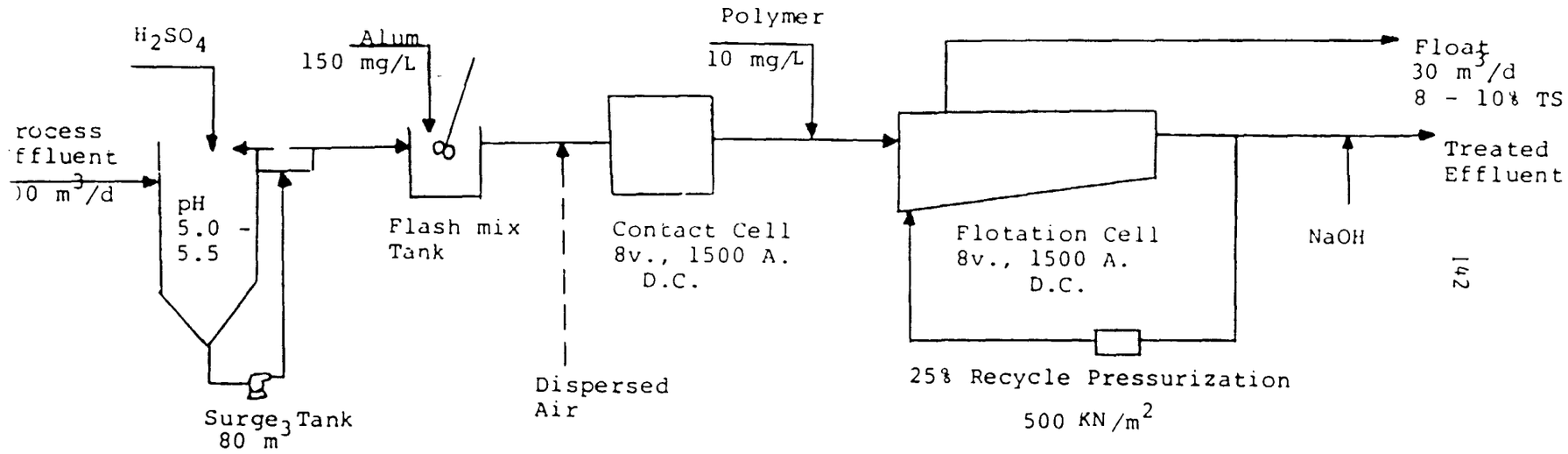

FIGURE 33 RENDERING PLANT ELECTROFLOTATION SYSTEM

The flotation cell removes about 30 m^3/day of floated solids and grease at a concentration of about 10 percent solids. A solids handling system was included in the design of the plant in an attempt to recover the 1600 kilograms per day of proteinaceous matter and 1600 kg per day of tallow valued at approximately $1200. A heated decant tank is provided to further dewater the sludge. A solid bowl centrifuge was installed to separate the solids from the liquid phase. The liquid phase was to be further split into a tallow stream, a water stream and a solid phase with a Westphalia separator. This solids handling system has not been successful as separation of the sludge components cannot be adequately effected. Furthermore, the addition of the recovered solids to the rendering operation was found to reduce the quality of the high grade tallow. Investigations are continuing in these areas in an attempt to solve the problems associated with handling these recovered materials.

The capital cost of the treatment system, exclusive of the sludge handling equipment and the building was approximately $250 000 (1977). Chemical costs associated with the operation are $140 per day. The daily power requirements directly related to the electrolytic processes are approximately 350 kWh. When operation of the unit has been optimized, it is estimated that operator time requirements will be three hours per day.

12.4 Physical-Chemical Protein Recovery

Three physical-chemical schemes designed to recover protein as an animal feed byproduct from meat, poultry and fish processing wastes have been commercially developed. The Ecotech process utilizes superphosphate as the precipitant-coagulant. The Aminodan process is based on a proprietary chemical for the recovery of protein. The Alwatech process uses sodium lignosulphonate as the protein precipitant. Although there are a total of twenty-five Aminodan plants in Europe and the Middle East, there is little information available in North America concerning the process. The Ecotech process has been developed and tested in New Zealand but there are no full-scale examples of the system.

The Alwatech process is presently being marketed in the United States and the first full-scale system was recently completed at a large American meat packing plant. Case histories of the application of the Alwatech process for protein recovery from meat and poultry processing effluents are reviewed after a brief description of the operating principles.

The Alwatech process, developed in Norway, is based on the specific precipitation of protein by purified high molecular weight lignosulphonates under acid conditions.

The precipitated solids, recovered by dissolved air flotation, contain up to 50 percent protein depending on the quality of the raw waste. As lignosulphonates are accept by the European Economic Community and the United States Food and Drug Administ ion as animal feed additives, the recovered proteinaceous matter can be marketed as an animal feed material. The installed Alwatech process normally includes sludge coagulation and dewatering facilities.

Case History 7

This English poultry processing operation handles approximately 75 000 broilers per day in an operation very similar to modern North American plants. Rotating screens are used to remove feathers and offal from flume waters. Good blood recovery is practised in the plant. Average water usage is approximately 1200 m^3/day, equivalent to approximately 16 litres/bird. The flow varies from 650 to 1800 m^3/day. Raw waste BOD is in the range of 1000 to 1500 mg/L.

The plant originally operated two parallel low-rate trickling filters to treat process effluent prior to discharge to the receiving waters. An Alwatech protein precipitation process and two parallel high-rate filters were installed in 1972 to pretreat the process effluent prior to the low rate filters.

The Alwatech protein precipitation plant includes a surge tank to reduce influent concentration variations. The lignosulphonate dosage depends on the influent protein content. Wide variations in protein concentration can reduce treatment efficiency and waste chemicals. Purified sodium lignosulphonate (Alprecin) is dosed to the waste at approximately 100 mg/L. The lignosulphonate, imported from Norway as a dry powder, has the low molecular weight compounds removed to improve treatment efficiency. Present cost in England is about £200/ton (Canada $0.48/kg). The operator varies the lignosulphonate dosage manually based on visual observation of the influent quality and his expérience with the discharge patterns in the processing area.

Two equal volume streams are pumped to the parallel, circular flotation units. A third stream, representing approximately 15 percent of the total flow is pressurized to 600 kN/m^2 to provide the bubble source to the two flotation cells. Immediately prior to the flotation cells, the pH of the influent stream is adjusted to 3.0 with sulphuric acid to precipitate the protein-lignosulphonate complex.

The FRP flotation units are 5.5 m in diameter, operated at a hydraulic loading of approximately 50 m^3/m^2/day. Sludge is removed by a rotating vacuum mechanism. Treated effluent is neutralized with lime prior to discharge to the trickling filters.

As the Alwatech protein precipitation plant provides pretreatment of the process effluent prior to the biological system, there is little data available regarding operating efficiency. However, plant personnel indicate that the system consistently provides approximately 75 percent BOD removal to a level of about 300 mg/L. Plant operators have had few problems with the installation since start-up. Operator duties are primarily chemical make-up, routine equipment maintenance and clean-up.

Sludge from the flotation cells, removed at 5 to 15 percent solids, is presently mixed with offal and other waste materials and hauled away for land disposal. Odour problems have been encountered at the processing plant in the past. Therefore, management has been hesitant to install any type of byproduct recovery system to handle plant wastes and Alwatech sludge.

Disposal of the sludge, generated at a rate of 1.3 kg per kg BOD removed, results in a significant operating cost for the plant. Without recovery of protein from the Alwatech sludge, the process does not appear to be economically competitive with more conventional physical-chemical treatment processes.

Case History 8

The first North American installation of Alwatech protein recovery was completed in December 1977 at a large Mid-Western beef packing plant. The plant slaughters 1800 animals per day and exhibits good in-plant water and waste management. Average water usage is in the range of 3 litres per kg LWK. Effluent loading is controlled by dry paunch handling, blood recovery and coagulation, and dry cleanup. The plant also operates an on-site meal plant. Average effluent flow is approximately 2500 m^3/day. The waste averages approximately 2300 mg/L BOD, 1800 mg/L suspended solids, and 1100 mg/L oil and grease.

The Alwatech protein recovery plant is designed to handle 3000 m^3/day from an existing primary clarifier which is now operated as a surge tank. The plant is intended to remove 70 percent of the BOD, reduce the suspended solids to less than 300 mg/L and reduce the oil and grease to less than 75 mg/L prior to discharge to the municipal plant. A schematic flowsheet of the plant is shown in Figure 34.

The protein precipitation system is similar to that described in the previous case history, except that the process is more highly automated. Purified sodium lignosulphonate (Alprecin) is used at a dosage in the range of 100 to 300 mg/L. The feed solution is made up automatically in this installation using a simple dry polymer feed system. The plant has not operated long enough to establish a pattern in the lignosulphonate dosage. Therefore, jar tests are done hourly to establish the dosage rate.

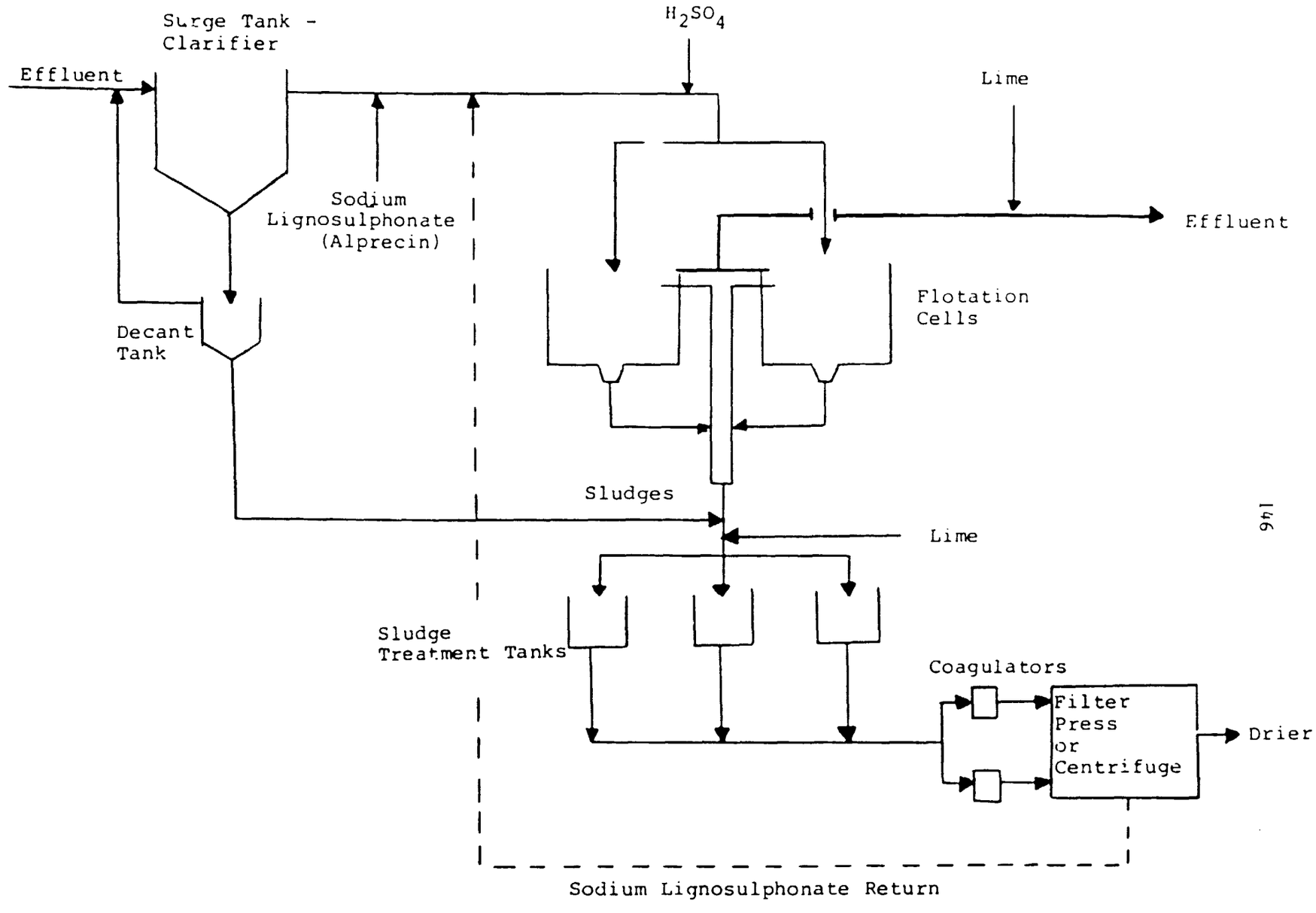

FIGURE 34 ALWATECH PROTEIN RECOVERY SYSTEM

212

Solid separation occurs in two circular dissolved air flotation units after pH adjustment to 3.0 with H_2SO_4. The flotation cells operate at a hydraulic loading of approximately 35 m^3/m^2/day. Float is removed with a rotating vacuum skimmer. A bottom scraper for settled sludge removal is also provided. Treated effluent is neutralized with lime prior to discharge.

A complete byproduct handling system is included at this plant to recover a marketable animal feed from the Alwatech sludge. Float from the treatment plant is collected in three batch holding tanks and the pH adjusted with lime to neutrality and pumped through a steam coagulator to a belt filter or solid bowl centrifuge for dewatering. The plant is presently using the centrifuge, which produces a sludge containing 40 to 45 percent solids. The liquid phase contains a significant quantity of lignosulphonate which is recycled to the treatment plant to reduce chemical requirements. The concentrated sludge can be dried with blood, other meal products, or in a separate drier. The Alwatech protein dried separately contains about 50 percent protein and 7 to 15 percent fat. Plant management indicate that a market is available for the 5000 kilograms per day of dry material recovered at approximately U.S. $0.20/kg.

There have been some problems with the plant during the start-up. These problems were basically the result of differences in European and American processing practices and the effect on a technology developed in Europe and being applied in the United States. Process water is warmer than in Europe which reduces the effectiveness of the dissolved air flotation system. Higher temperature also increases the rate of degradation of the proteinaceous matter in the effluent, reducing precipitation efficiency. Process effluents contain higher grease concentrations in the United States which reduces the value of the recovered meal. In-plant steps have been taken to reduce grease concentrations to a more manageable level. As the plant has been operating for a short period of time, there are no data available regarding efficiency. The U.S. EPA is sponsoring an extensive process evaluation program which, when completed, will provide documentation on process efficiency, operating costs and energy requirements.

Total capital cost of the system, including the byproduct handling equipment and the building was approximately U.S. $1 300 000. Plant management estimate a six to seven year payback based on the sale of proteinaceous feed material alone. Reduction in sewer surcharges could reduce the payback period to the order of two to four years.

12.5 Whey Utilization

Cheese manufacture results in about 9 kilogram of whey for every kilogram of cheese produced. Whey typically contains half the solids and 50 to 75 percent of the

nutrients of the whole milk from which it was derived. In the past, whey was regarded as a waste material and disposed of as such. The only feasible alternative was the use of liquid whey as an animal feed. Recently, however, there has been considerable development in the area of whey recovery and utilization. Areas which have been investigated include:

- drying (roller, spray, drum),
- membrane processing (electrodialysis, reverse osmosis, ultrafiltration),
- gel filtration,
- ion exchange,
- fermentation.

Three case histories of whey utilization programs are reviewed.

Case History 9

Spray drying of acid whey from cottage cheese production has been limited in the past by the inability of existing equipment to produce a high quality, dispersible, non-hygroscopic powder. In 1967, the Dairy Research and Development (DRD) Corporation commenced a program to demonstrate the feasibility of producing and marketing spray-dried acid whey powder. They have successfully modified existing equipment and developed new equipment and are producing some 900 to 1100 kilograms per hour of whey powder on a continuous basis at their New York plant. The simultaneous marketing program has been extremely successful. DRD is presently evaluating possible locations for other plants to meet market demands. Principal markets are in the food industry.

The process consists of five major steps - evaporation of the raw whey to a solids concentration of 40 to 44 percent, cooling of the condensed whey to crystallize a portion of the lactose, spray drying, final drying and packaging. It was found that the production of a high quality, non-hygroscopic whey powder depends on the chemical composition of the raw and condensed whey, the drying temperatures, design of the spray drier nozzles, the product and air distribution patterns in the drier, air temperature and humidity. Varying conditions can be somewhat overcome by changes in the operating procedures.

The basic equipment for the process was obtained from the DeLaval Separator Company. However, many problems developed with the equipment in this application and considerable modifications and new equipment installations have been made. Much of the information regarding the equipment design is proprietary. One of the most important findings of the work is that existing equipment is not suitable for the requirements of spray drying acid whey. Each project must be individually engineered.

214

Despite the problems associated with equipment and varying product quality, the process has been producing a high quality, dispersible, non-hygroscopic whey powder consistently since about 1975. The product contains between 3½ and 4 percent moisture. Further improvements are being made to the system to consistently attain a moisture level of 2 to 2½ percent. However, DRD is presently marketing all the acid whey powder they can produce at a price of about U.S. $0.35 per kilogram.

Based on American experience, the capital cost of a plant handling 225 000 kilograms per day of raw whey would be approximately U.S. $3 000 000 (1976). Operating costs are projected to be U.S. $4500.000 annually based on the production of 4 000 000 kilograms of dried whey powder. Economic conditions in the United States are such that the minimum size of an acid whey drying plant for economic operation is in the order of 225 000 kilograms per day of raw whey. This would provide a break-even operation. Obviously few cheese operations have sufficient volume to provide an economic justification for whey drying. The alternative is regional whey drying plants serving a number of cheese producers. A regional plant should have a capacity of 400 000 kilograms per day of raw whey, equivalent to approximately 9 million kilograms of dried whey powder per year, to ensure profitability.

Marketing is probably the single most important aspect of whey processing profitability. Overcoming the "waste" stigma associated with whey, ensuring high product quality and gaining acceptance for the whey powder in food formulas is most important to the success of such programs. However, spray drying has been demonstrated to be a viable method of eliminating pollution from cottage cheese whey.

Case History 10

After considerable pilot-scale work with a combined ultrafiltration and reverse osmosis system for whey treatment at a throughput of 4500 kg/day, a full-scale system capable of handling 140 000 kg/day of cottage cheese whey was constructed in 1972 at a New York cottage cheese plant. Under the sponsorship of EPA, the plant has been extensively studied to define the economic feasibility of the process.

A simplified flowsheet of the process is shown in Figure 35. Two-stage membrane processing results in a fractionation of the whey into a protein concentrate and a lactose concentrate. Raw whey undergoes ultrafiltration initially. The ultrafiltration membranes are designed to retain large molecules, such as proteins, while allowing small molecules such as lactose to pass through in the permeate. The ultrafiltration modules operate at relatively low pressure, 450 kN/m^2. Reverse osmosis membranes have smaller

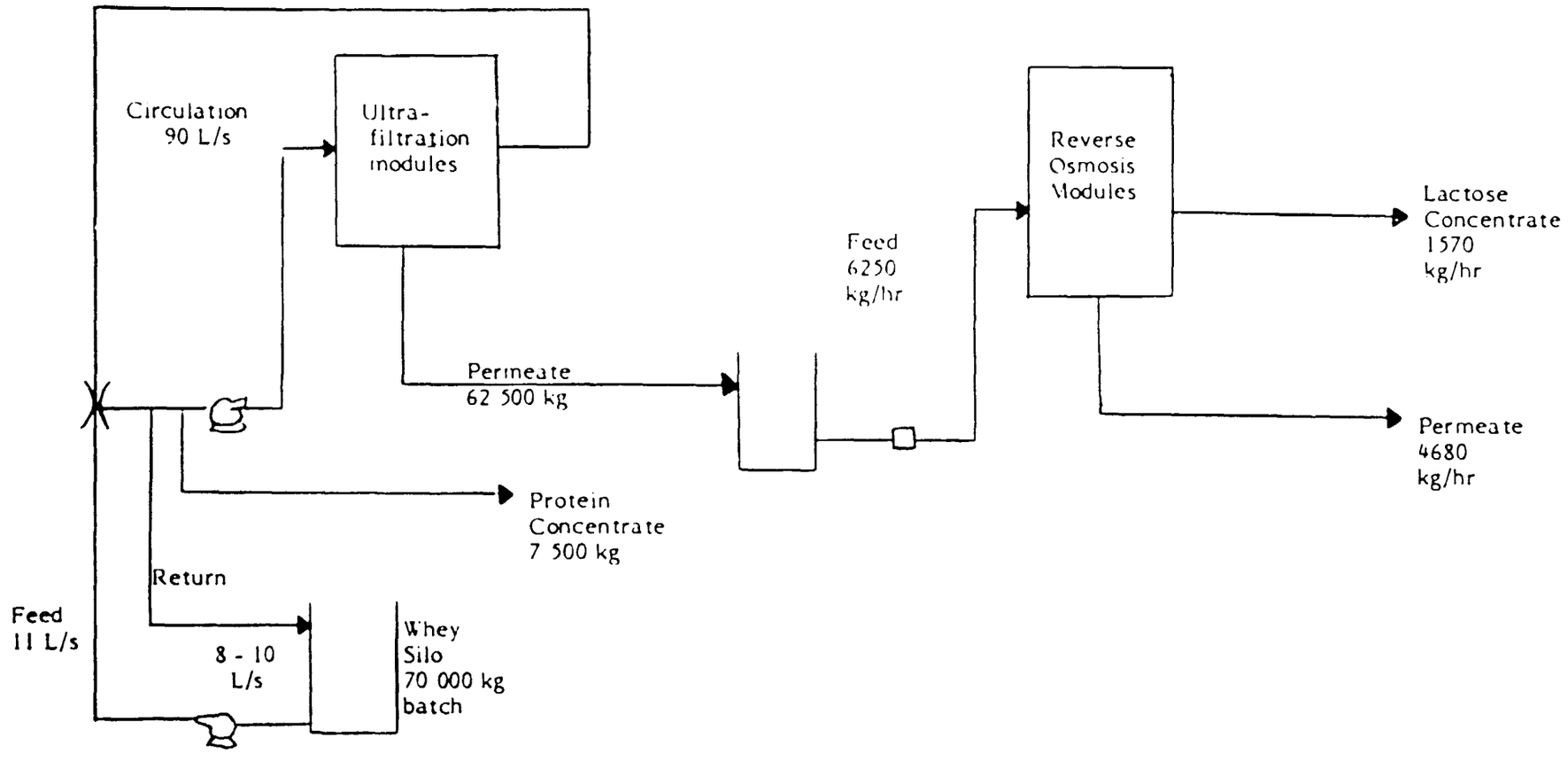

FIGURE 35 SCHEMATIC FLOWSHEET OF TWO-STAGE MEMBRANE PROCESS FOR WHEY RECOVERY

pore sizes and operate at higher pressures, in this case 5600 kN/m^2. The reverse osmosis system is designed to retain the salts of the ultrafiltration permeate, producing a concentrated lactose product. The permeate is relatively free of salts, lactose and lactic acid. At this plant, raw whey, which exhibits a BOD of about 35 000 mg/L, is converted to a protein concentrate, a lactose concentrate and a discharge stream containing a BOD in the range of 1500 to 2500 mg/L.

The membrane processing equipment was designed and installed by Abcor, Inc. There are six UF-480S ultrafiltration modules and six RO-850S reverse osmosis modules. The protein concentrate from the ultrafiltration unit contains about 7.5 percent protein. The lactose concentrate from the reverse osmosis unit contains between 16 and 20 percent lactose and lactic acid.

The major problems with membrane processing of whey have been the maintenance of sanitary conditions in the units and the relatively short life expectancy of the membranes. Cleaning compounds commonly used in dairies can significantly increase the rate of membrane failure. Although some improvements in the area of membrane durability have been made, the life expectancy is still only about one year. Replacement of membranes adds considerably to the operating cost of the system. Furthermore, sanitation costs are high. These are the areas that require further development in full-scale application of membrane processes to whey recovery.

Despite the early operational problems, the system has operated almost continuously since 1972. Marketing of the protein concentrate was a problem initially as the material was relatively new in the food industry. However, the plant is now selling as much of the protein as they can produce at a price of about $4.40 per kg compared to whey powder prices in the order of $0.45 per kg. Finding markets for the concentrated lactose stream are more difficult, although there is a commercial lactose plant in the area which presently buys most of this material. It was originally felt that the reverse osmosis permeate could be recycled to the cheese plant for rinsing of the cheese curd. Problems were found in maintaining sanitary conditions on the permeate side of the reverse osmosis membranes and this recycle has not been possible.

Capital cost for the 140 000 kg/day membrane processing system was approximately $750 000 (U.S., 1972$). Operating costs have been approximately $220 000 annually. A substantial fraction of these costs are associated with membrane replacements and cleaning compounds. Revenue for protein sales represent some $50 000 per day of operation if a high product quality can be maintained.

Most cheese producers who are seriously investigating membrane systems for whey treatment and recovery are considering single-stage systems. Reverse osmosis is an alternative to evaporation to concentrate whey prior to drying. However, dry whey powder is of considerably less value than a purified whey protein concentrate. Ultrafiltration alone produces the whey protein concentrate but has less impact on the effluent discharges as the lactose, representing up to 75 percent of the whey BOD, is not affected. Ultrafiltration is less expensive than reverse osmosis, in terms of capital and operating costs, due to the lower pressures involved. The investigations at this plant have shown that two-stage membrane processing is feasible. Development work is continuing in the areas of sanitation and membrane durability. Although the process was demonstrated for the treatment of acid whey from cottage cheese production, it appears to be equally applicable to sweet whey.

Case History 11

After considerable research and development work in the area of protein recovery from meat packing effluents by regenerated cellulose ion exchangers, emphasis has been shifted to the recovery of protein from whey by the process. Although technically feasible for treatment of meat packing effluents, the recovered protein has a relatively low quality. It can be marketed as an animal feed material, valued at only £200/ton in the United Kingdom. The low market value of the proteinaceous material makes the process uneconomical at present. However, whey protein recovered by the process has a potential market value of up to £2000/ton depending on the quality and application. Investigations have shown that ion exchange is economically feasible for this application.

The process has undergone considerable pilot scale evaluation on dairy whey. The pilot plant handles up to 9000 litres per day in 700-litre batches. The basic protein recovery process involves batch

Ultrafiltration can be used to preconcentrate the whey prior to ion exchange or to concentrate the protein isolate from the ion exchanger. It has been found that ultrafiltration fluxes for the protein isolate are significantly higher than for raw whey.

The process has been developed as an integral part of an overall whey treatment system, not as a complete treatment system in itself. The discharge after ion exchange will contain virtually all of the raw whey lactose and up to 40 percent of the original protein. This stream can be handled by any of the technologies applicable to raw whey, such as evaporation and spray drying. The ion exchange system is designed to produce a high value protein product while simultaneously adding flexibility to the overall whey treatment scheme to allow the production of a wide variety of products in response to market demand.

The economics of the process depend on the design of the overall whey treatment process and the quantities of the various products which are produced. A number of alternatives are shown schematically in Figure 36. Products can range from a virtually pure (96 percent) protein from the ion exchange eluant after ultrafiltration and drying to a 30 percent protein powder resulting from ultrafiltration of the raw whey without any exchange. Various blends containing a range of protein contents between 30 and 96 percent can be produced.

The process has been developed to the point where commercial application is now being considered. Several British and European dairies have shown interest in the system. As yet there are no full-scale systems.

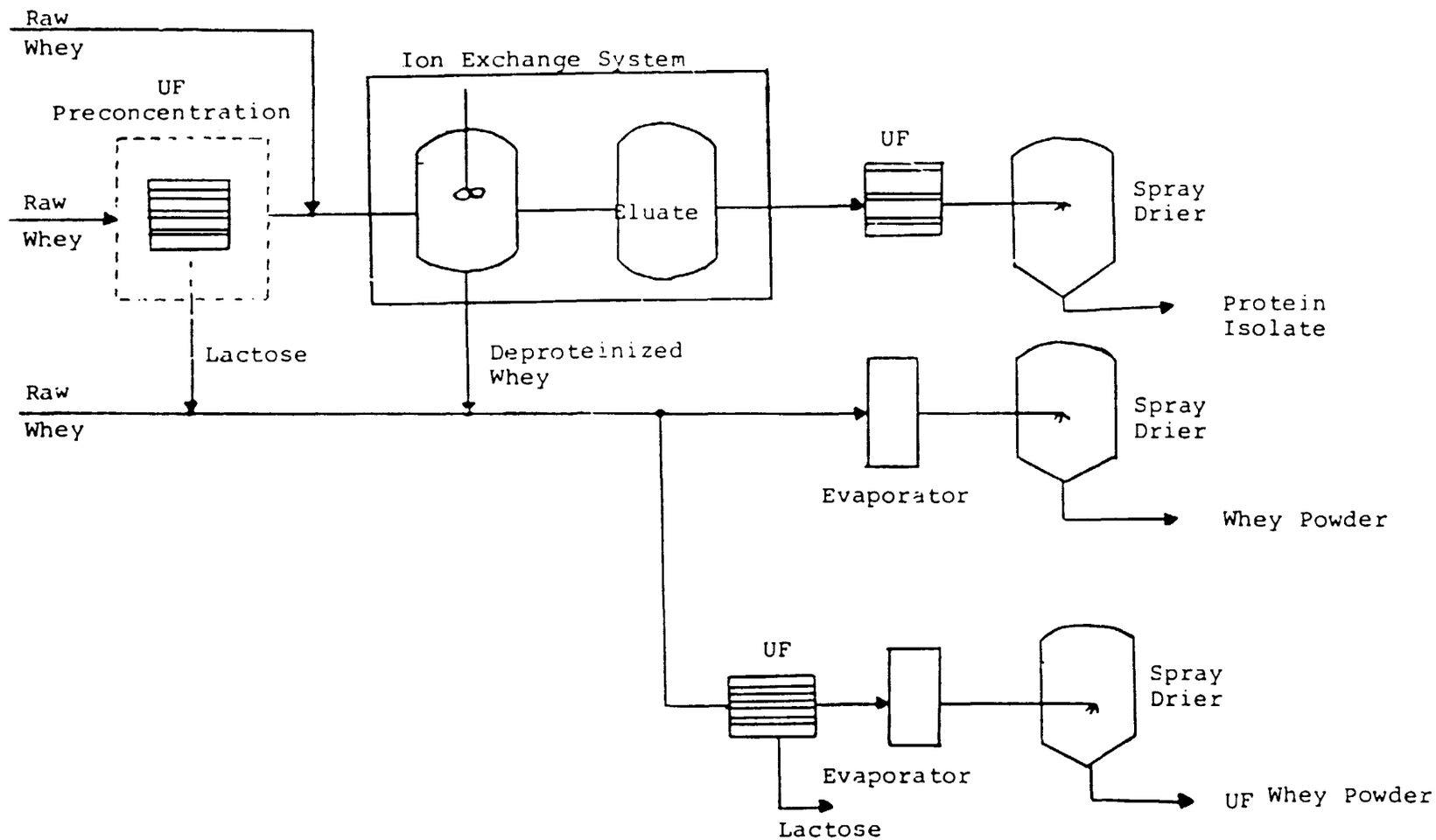

FIGURE 36 ALTERNATIVE WHEY RECOVERY SCHEMES USING CELLULOSE ION EXCHANGERS

13 ECONOMIC CONSIDERATIONS

The previous sections of the manual have dealt with the technical feasibility of physical, physical-chemical and advanced treatment technologies. The ultimate objective of a pollution abatement program is to define the most cost-effective, technically feasible alternative. Economic considerations will have the most significant effect on the final process selection.

Pollution abatement costs vary considerably within each subcategory of the food processing industry. Generalized cost data, even for a specific industrial sector, can be very misleading if used as a basis for determining the most applicable treatment technology for a particular installation. Individual unit costs will depend on such factors as industrial process, waste characteristics, site conditions, associated treatment processes, labour costs, and other site-specific factors. Although equipment cost data is readily available for simple physical separation units such as screens and clarifiers, reliable information regarding the capital and operating costs of advanced technologies such as reverse osmosis and ultrafiltration is scarce. Therefore, no specific cost data is presented in this manual. Rather, the factors which should be considered during the economic analysis of alternatives are discussed.

During the initial evaluation, it is important that all feasible pollution abatement alternatives be considered. These include various combinations of such methods as:

- in-plant water conservation,
- improved product yield and raw material utilization,
- byproduct recovery,
- pretreatment of process effluents prior to discharge to a municipal sewer, industry-operated treatment facility or land application system,
- treatment of individual waste streams or total process effluents to allow recycle or reuse in the process,
- polishing of treated process effluents to meet more stringent discharge regulations or allow reuse of wastewater in the process.

The extent of existing waste-treatment facilities at the plant will strongly influence the selection process. In addition, a knowledge of the degree of treatment required to meet environmental and/or economic constraints is extremely important.

In the economic evaluation, both capital and operating cost information is necessary. However, the potential benefits (negative costs) associated with each alternative should also be considered. Throughout the manual, possible benefits such as increased production through better raw material utilization, reduced surcharges through in-plant control of waste loads and income resulting from byproduct recovery have been emphasized. Consideration of the economic impact of these benefits will provide an accurate estimate of the actual cost of the total pollution abatement program to the processor.

13.1 Capital Costs

The capital cost associated with each alternative is normally the easiest to estimate accurately. The cost associated with equipment purchase or equipment modifications to improve process efficiency, recover byproducts or treat process effluent can be readily obtained from suppliers based on the pertinent design criteria. In some cases, laboratory or pilot-scale studies may be necessary to precisely define design factors, particularly in the case of innovative technologies.

Capital cost estimate should also include such factors as:

- installation costs including contractor fees,
- engineering, legal and contingency costs,
- costs associated with related instrumentation, piping, buildings and building services,
- land acquisition and improvement costs.

13.2 Operating Costs

Operating costs contribute significantly to the annual cost of pollution abatement and are more difficult to estimate accurately than capital costs.

Operating labour requirements vary significantly depending on the variations in process effluent flow and characteristics, sophistication of the treatment process, degree of automation, skill of the operator, and the attitude of the processor towards the pollution abatement program. Similar observations are true of maintenance and supervisory requirements.

Sludge handling and/or disposal costs can contribute significantly to the operating costs, particularly for physical-chemical treatment processes. Thus, physical-chemical systems which produce a sludge which cannot be utilized as a byproduct, may be economically unfeasible due to the costs associated with disposal of this material.

222

Chemical costs, particularly for precipitation and coagulation of food processing effluents, normally represent a major fraction of the operating costs. Thus, it is necessary that laboratory and pilot-scale evaluations be designed to allow selection of the most cost-effective alternative. Furthermore, the treatment process should be operated to ensure that chemical dosages are maintained in the optimum ranges. Equalization may be economically justified in many cases to ensure optimum chemical usage.

Other factors which should also be considered in the estimation of operating costs include:

- power and other utilities such as steam, compressed air, water, etc.,
- process monitoring including sampling and analytical costs,
- amortization of capital.

13.3 Potential Benefits (Negative Costs)

Many economic evaluations do not take adequate account of the negative costs or benefits of the pollution abatement program. Some of these benefits have tangible monetary values associated with them. Other benefits, such as improved receiving water quality or reduced odours, cannot, at present, have a dollar value ascribed.

The tangible benefits which should be considered in the economic analysis include:

- increased production output resulting from increased raw material utilization or improved process efficiency,
- reduced water costs resulting from in-plant conservation or water reuse/recycle programs,
- reduced sewer charges as a result of decreased process effluent loads,
- revenue resulting from the marketing of a recovered byproduct,
- reduced disposal costs associated with concentrated waste liquors or sludges handled by alternate methods,
- reduced capital and/or operating costs for industry-owned treatment facilities as a result of in-plant modifications to reduce process effluent loadings.

Pollution abatement is normally considered an additional operational expense associated with production of the final product. However, careful review of the benefits associated with the various control methodologies described in this manual can indicate a net return-on-investment. Obviously, the economics are strongly influenced by the specific conditions at the particular plant in question.

14 FUTURE TRENDS IN FOOD PROCESSING POLLUTION ABATEMENT

The effects of economic inflation are most evident in the food processing industry. Food prices are rising more rapidly than prices of nearly any other commodity. Production costs are increasing due to increased raw material, labour, energy and water costs. Food processors typically operate at low return on invested capital. Increased costs must be passed on to the consumer in the form of increased prices. Waste treatment can have a significant effect on production costs. Methods of reducing waste treatment costs, including implementing in-plant conservation programs, increasing yield and recovering byproducts, will be increasingly important to the food industry.

14.1 Pollution Abatement Technology

The food industry is conservative in nature, tending to rely on well-proven technology in processing and in pollution abatement. This is particularly true of the small processor. Physical and physical-chemical technologies are increasingly well understood and are being more widely used in other industrial applications. The most immediate areas of application of these technologies in the food industry will be for pretreatment of process effluents in response to increasingly prohibitive surcharges to municipal sewer systems and for upgrading treated effluents to meet more stringent discharge requirements. More complex byproduct recovery schemes will require considerably longer to acquire wide approval in the food industry.

In the area of advanced wastewater treatment technologies, membrane systems, particularly reverse osmosis and ultrafiltration, show the greatest promise. These technologies will not be used in the near future for upgrading a treated process effluent. Rather, byproduct recovery will be the primary application. The use of membrane processes has been shown to be feasible for concentration and fractionation of dairy whey. Other areas of application which are gaining wider acceptance are also associated with the recovery of valuable proteinaceous material from potato starch processing effluents, soy whey and blood.

There are few immediate areas of application for such technologies as activated carbon adsorption or ion exchange in the treatment of food processing wastes. The use of these technologies will be limited to the renovation of concentrated waste liquors such as brines and pickling solutions.

Economic factors are considerably increasing the importance of in-plant control of process effluents, particularly through reuse/recycle schemes. Such programs

224

invariably produce a low-volume, highly concentrated waste stream ideally suited to treatment by physical, physical-chemical and advanced techniques. Biological treatment and land application may no longer offer the most cost-effective solution.

The food industry is rapidly realizing the benefits of water reuse and recycle as a means of improving process economics while meeting environmental requirements. In many cases, the industry has attempted to upgrade and modify existing water cycles to provide for water reuse. Figure 37 illustrates schematically the water use cycles. In 37a the conventional once-through water use process is shown.

This is obviously the most wasteful in terms of water use and process losses. It is also, normally, the most expensive in terms of treatment costs. Once-through usage produces a dilute mixture of waste materials from all processing steps. Although in-plant conservation can reduce water usage and waste loading, a dilute heterogeneous mixture of contaminants must be separated prior to discharge.

Figure 37b illustrates the first approach to recycling. Once-through water is treated by physical, physical-chemical or biological methods and returned to the process with some fresh-water make-up to control the concentration of objectionable contaminants. This alternative improves the financial position of the processor. Surcharges and water costs are significantly reduced. However, this recycle mode has little effect on actual treatment costs. Water is still used on a once-through basis. The treatment system must be designed to handle a relatively dilute mixture of wastes from all processing steps. As in the conventional once-through water cycle, biological treatment alternatives are normally most cost-effective. However, the processor's return-on-investment is low.

The countercurrent water reuse scheme illustrated in Figure 37c improves the situation considerably. This water cycle is becoming more widely used in fruit and vegetable processing, although recycle of treated water to the process is not common. It is also increasingly accepted elsewhere; for example, the reuse of poultry chiller water in the scalder. The ultimate waste stream is more concentrated due to repeated usage. Physical-chemical treatment processes become more economically competitive with biological systems. However, the waste stream still contains a mixture of wastes resulting from a wide variety of processes.

In Figure 37d, the modular water recirculation approach is illustrated. Water is used in a single process step. Treatment units designed specifically for the wastes resulting from that process are located immediately in the processing area. The water can be reused until contaminant concentrations reach a level at which they could

37a Once-Through Water Use

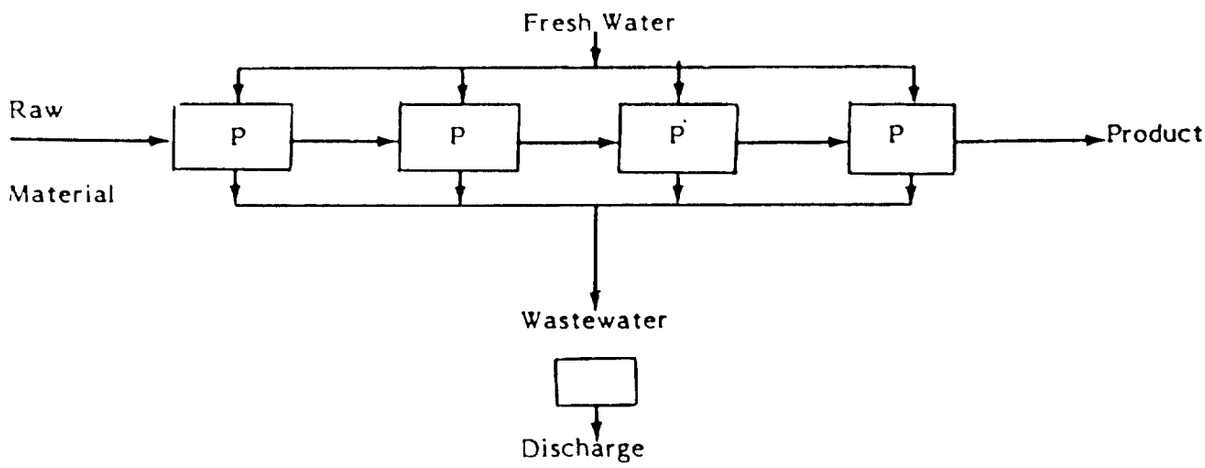

37b Process Effluent Recycle

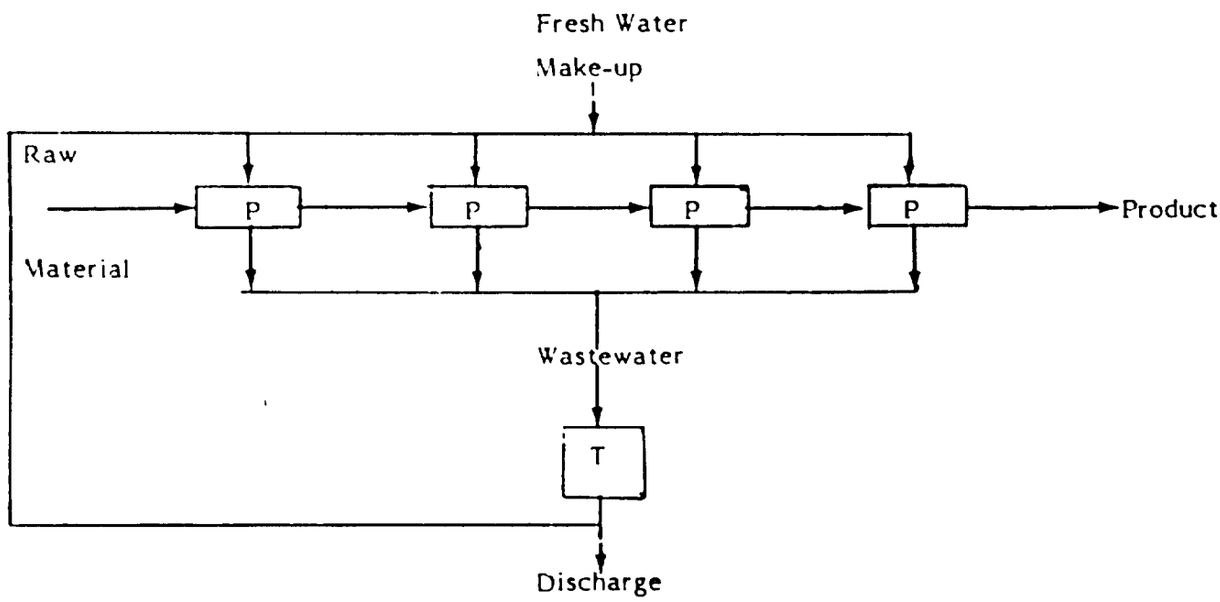

FIGURE 37 WATER USE/REUSE/RECYCLE SCHEMES

37c Countercurrent Water Reuse with Recycle

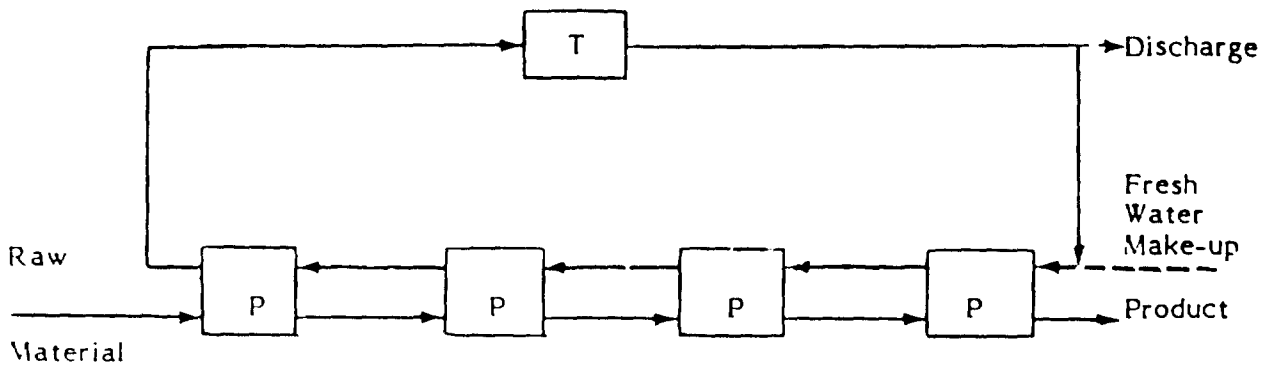

37d Modular Water Recycle

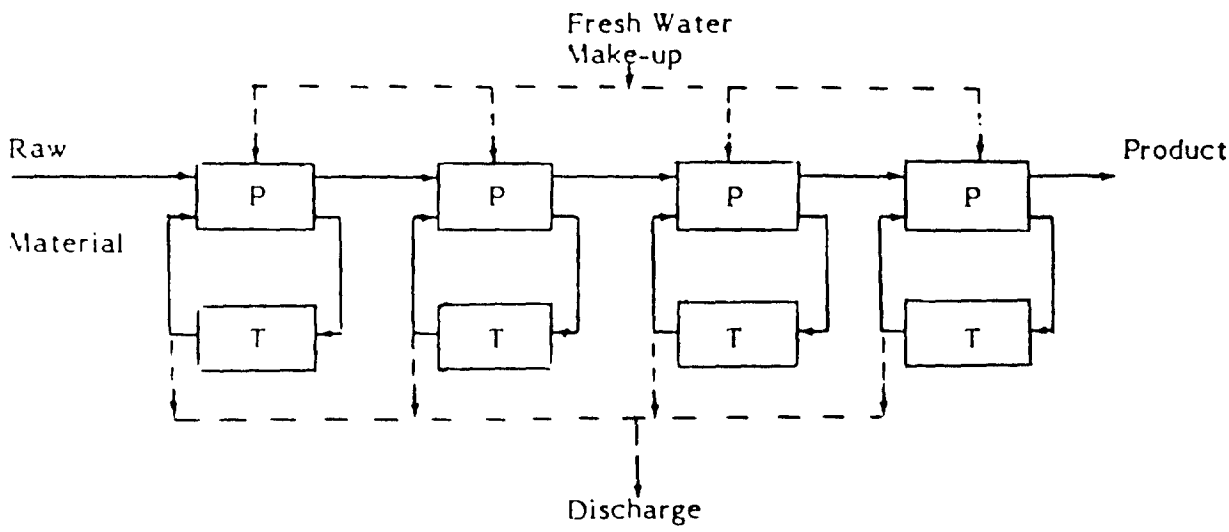

CODE: P = Processing Step
T = Treatment Step

FIGURE 37 (Cont'd)

interfere with product quality. Thus, a concentrated waste stream ideally suited to treatment by physical-chemical means results. There are still problems associated with this approach, primarily due to various water quality requirements associated with water-product contact in the process. However, the concept is receiving increasing approval in the food industry. For example, potable water requirements for poultry chillers may be relaxed based on U.S. DA investigations documenting the feasibility of reusing chiller water in the chiller after diatomaceous earth filtration and chlorination. Poultry processors already reuse feather flume water after screening. There will be continued advances in this area in all segments of the food processing industry.

One area of concern in such intensive reuse/recycle schemes is the use of chlorine for bacterial control. High chlorine concentrations are often required by regulatory officials to ensure product quality. Possible side effects of chlorine reactions with the food product and the residual [illegible] d organic matter in the water have not been adequately considered. Research in this area is obviously needed. Alternative microbiological control agents such as ozone, chlorine dioxide, ultraviolet radiation, or single pH adjustment must be considered. Similarly, possible accumulation of herbicides, pesticides and antibiotics to hazardous level in the reused water supply have not be adequately researched. These areas require considerably more attention.

Such reuse systems are not, in themselves, the ultimate solution to the environmental problems of the food processing industry. Economics dictate that the overall program include comprehensive in-plant control and conservation of wastewater discharges. In addition, each individual treatment step will result in a concentrated solid or liquid stream which must be handled, preferably by recovery of byproducts.

Byproduct recovery is often cited as the most cost effective means of pollution abatement and the importance will become more significant as the demand for and cost of food rises. The waste materials have considerable food and/or feed value. Protein recovery from dairy whey, meat, poultry and fish processing influents have been shown to be technically and economically feasible. The application of protein precipitation processes and membrane separation systems will continue to increase.

Byproduct recovery results in the production of a secondary product other than that which the food processor is used to handling. Food processors have developed markets for their primary products. (They are not, in general, adept in the development markets for new products). However, byproduct recovery is not feasible if a market is not developed for the secondary product. This has traditionally been the major problem with whey recovery.

Increased product yield can often have the same effect on process effluent loading as byproduct recovery. However, increasing raw material utilization results in an increase in final product, the same product which the processor has always handled. The market is already developed. Increasing product yield through improvements in the actual raw material and advancements in process equipment and processing techniques should be the first step considered in the pollution abatement evaluation process.

In some areas, centralized processing facilities to produce byproducts from the waste materials of food processors may be a viable alternative. The waste material of the primary processor becomes the product of a secondary processor who is responsible for marketing the commodity. Such is the case with dairy whey.

Byproduct recovery schemes have become more favourable, particularly in the United States. due to the increasing integration within the food industry. Small, independent specialist food processors cannot effectively compete in the market with large food chain operations. These food chains are increasingly operating their own facilities to provide meat products, dairy products, baked goods and other commodities internally. Waste materials from one phase of the operation can be readily transferred as a raw material for another phase. An example is the use of whey from a cheese operation to produce yeast for a company-owned bakery.

In the selection of the site visits reviewed in Section 12, emphasis was placed on technologies which, in general, represent new developments in food industry waste treatment. Many of these technologies have not, as yet, gained widespread acceptance. The initial full-scale demonstration of technical and economic feasibility is extremely important in such cases.

One particular area of pollution abatement which is outside the scope of this physical-chemical manual but which should be realized as an alternative for food processors is the fermentation of food industry wastes to produce single cell protein for food and feed products, organic chemicals and other miscellaneous byproducts. Applications of fermentation technology to food industry wastes which are being actively investigated include the production of baker's yeast, wine and single cell protein from whey, fungal conversion of carbohydrate wastes to animal feed protein, vitamin supplements and the application of deep tank fermentation processes to organic waste streams for the production of single cell protein. Such protein sources are unconventional but have gained acceptance in underdeveloped countries as a result of various aid programs.

14.2 Involvement of Regulatory Agencies

Financial government sponsorship of food industry waste treatment research and development has been drastically reduced, particularly in the United States. Most regulatory officials feel that the technology required to solve the problems of the food industry is available, has been well demonstrated and is economically feasible. The effluent problems of the food industry involve suspended particulate matter, oxygen-demanding organic matter and grease. The emphasis of government-sponsored research programs has been shifted elsewhere to deal with more serious toxicity problems. As a result of these changes in government policy, most of the process development work for the food industry must be financed internally. As much of the waste treatment research relevant to the food industry has been done in the United States, these changes will have a profound effect on the development and application of new technology in the Canadian food industry.

Researchers in the United States who have been specifically involved with the food industry, such as the U.S. Department of Agriculture and the National Food Processors Association, have already been affected by these changes in government policy. Study programs are now concentrating more intensively on the areas of energy conservation in food processing. Energy costs per unit production are escalating rapidly. Energy inventories are already being done in poultry processing plants and in the fruit and vegetable industry. Such studies will expand to cover all areas of food processing.

In the past government agencies in Canada, such as Agriculture Canada and Environment Canada, have been involved in supporting studies in the food industries. For the most part the studies were aimed at the development of production technology which was efficient, conserved energy and minimized the discharge of pollutants. One such recent study involved the presence of salmonella in the waste discharge from poultry processors (Dearborn Consulting Services, 1978). The study demonstrated the effectiveness of chlorine and ozone on the removal of salmonella from the waste streams.

At present there are two demonstration studies being conducted in the Canadian food industry with federal assistance from Environment Canada. One study involves the use of an electro-coagulation unit in the meat industry to recover waste sludges for use as a byproduct. The success of this study would mean substantial savings in solid waste disposal while increasing byproduct volume. The other will demonstrate the use of a reverse osmosis unit in the recovery of whey from a dairy processing operation.

This study will assist the industry in retaining a useful byproduct while removing a substantial pollutant from the waste stream.

There are four areas to be considered in terms of regulatory agencies:

- product quality,
- pollution abatement,
- energy conservation,
- occupational safety.

Each is regulated by a different agency. There is an increasing realization of the interactions between these areas and the need to optimize the overall operation without adversely affecting any of the individual facts. More integrated approaches to the problems are being taken by regulatory bodies including Environment, Agriculture and Health and Welfare.

Obviously, economic considerations will be a primary factor in defining the future trends. The food industry has traditionally sought rapid return-on-investment. In many instances, a two-year payback period is mandatory, particularly in cases where profitability is determined by natural, uncontrollable factors such as harvest. A combination of in-plant control through water conservation, increased yield and byproduct recovery can often provide the most cost-effective pollution abatement program. However, capital investments for sophisticated equipment are often high. Government agencies should consider providing financial incentives to the industry for the installation of technologies which require longer pay-back periods than the food processor could economically consider on his own. Such a program would significantly accelerate the rate of acceptance of more complex and more effective pollution abatement techniques.

ACKNOWLEDGEMENTS

Dearborn Environmental Consultants acknowledge the assistance of the numerous Government officials, researchers, plant personnel and equipment suppliers who cooperated during the collection of information required for the preparation of this manual.

In particular, we thank J.M. Haskill, M.J. Riddle and D.W. Bissett, of Environment Canada, for their assistance during the course of the investigations.

232.

REFERENCES

Andelman, J.B. and Clise, J.D., "Water Reuse of Wastewater from a Poultry Processing Plant", Proc. Eighth National Symp. on Food Processing Wastes, 389 (1977).

Bissett, D.W., Fisheries and Environment Canada, Personal Communication (1978).

Cambrian Processes Ltd., "Environmental Survey of the Rapeseed Processing Industry", unpublished report prepared for Environment Canada (May, 1977).

Clise, J.D., "Poultry Processing Wastewater Treatment and Reuse", Environmental Protection Technology Series, EPA-12060-FYG U.S. Environmental Protection Agency (March, 1974).

Dearborn Consulting Services, "Disinfection of Poultry Packing Plant Effluents Containing Salmonella", for the Water Pollution Control Directorate, Environmental Protection Service, Environment Canada, Report No. EPS 3-WP-78-9, Ottawa (1978).

Dearborn Consulting Services, "Evaluation of Physical-Chemical Technologies for Water Reuse, Byproduct Recovery and Wastewater Treatment in the Food Processing Industry", Volume II, unpublished report to the Water Pollution Control Directorate, Environmental Protection Service, Environment Canada (1978).

Harper, W.J. and Blaisdell, J.L., "State of the Art of Dairy Plant Wastes and Waste Treatment", Proc. Second National Symp. on Food Processing Wastes, 509 (1971).

Jones, R.H., Pollution Control in Meat, Poultry and Seafood Processing, Noyes Data Corp., Par, Ridges, New Jersey (1974).

Joyce, M.E. et al, "State-of-the-Art: "Wastewater Management in the Beverage Industry", EPA 600/2-77-048, U.S. Environmental Protection Agency (July, 1977).

Lee, C.Y. et al, "Waste Reduction in Table Beet Processing", Proc. Fourth National Symp. on Food Processing Wastes, 66 (1973).

Ralls, J.W. and Mercer, W.A., "Continuous In-Plant Hot-Gas Blanching of Vegetables", EPS Tech. Series EPA-600/274-091, U.S. Environmental Protection Agency (1974).

Riddle, M.J. and Shikaze, K., "Characterization and Treatment of Fish Processing Plant Effluents in Canada", Proc. Fourth National Symp. on Food Processing Wastes, 400 (1973).

Stanley Associates Engineering Ltd., "Review of Treatment Technology in the Fruit and Vegetable Industry in Canada", for the Water Pollution Control Directorate Environmental Protection Service, Environment Canada, EPS-3-WP-77-5, (March, 1977).

Stanley Associates Engineering Ltd., "An Inventory of the Meat and Poultry Products Industry in Canada", Unpublished Report prepared for Environment Canada (1974).

Stephenson, J.P. and Guo, P.H.M., "State-of-the-Art Review of Processes for Treatment and Reuse of Potato Wastes", Water Pollution Control Directorate Environmental Protection Service, Environment Canada EPS 3-WP-77-7, (March, 1977).

233

Stone, H.E., "Dry Caustic Peeling of Clingstone Peaches on a Commercial Scale", U.S. Environmental Protection Agency EPA-660/2-74-092, (Dec. 1974).

Train, R.E., et al, "Development Document for Proposed Effluent Limitations Guidelines and New Source Performance Standards for the Renderer Segment of the Meat Products Point Source Category", U.S. Environmental Protection Agency EPA 440/1-74/0312, (Aug., 1974).

LIST OF ABBREVIATIONS

AL	-	Aluminum
BATEA	-	Best Available Technology Economically Achievable
bbl	-	barrel
BOD	-	Biochemical oxygen demand
BPCTCA	-	Best Practicable Control Technology Currently Available
$CaCN_2$	-	Calcium Cyanamide
$Ca(HCN_2)_2$	-	Calcium Hydrogen Cyanamide
CaO	-	Calcium Oxide
Ce	-	Cesium
cm	-	centimetre
Co	-	Cobalt
CO_2	-	Carbon dioxide
COD	-	Chemical oxygen demand
Cu	-	Copper
$CuCl_2$	-	Copper chloride
$CuSO_4$	-	Copper sulphate
Fe	-	Iron
$Fe_2(SO_4)_3$	-	Ferric sulphate
FOG	-	Fat, Oil and Grease
FRP	-	Fiberglass-reinforced plastic
g	-	gram
g/L	-	gram per litre
gpd	-	gallons per day
gpm	-	gallons per minute

235

Igal	-	Imperial gallon
H_2SO_4	-	Sulphuric acid
kg	-	Kilogram
kg/t	-	kilogram per tonne
kkg	-	thousand (1000) kilogram
kWhr	-	kilowatt - hour
L	-	litre
lb	-	pound
lb/day	-	pounds per day
LSA	-	Lignosulphonic acid
LWK	-	Live Weight Killed
m	-	metre
m^3/t	-	cubic metres per tonne
mg/L	-	milligrams per litre
Mn	-	Manganese
N	-	Normality
Na_2CN_2	-	Sodium cyanamide
$NaHCN_2$	-	Sodium monocyanamide
NCA	-	National Canners Association
NDSS	-	Neutralized Dried Soapstock
P_2O_5	-	Phosphorus pentoxide
psi	-	pounds per square inch
psig	-	pounds per square inch gauge
rpm	-	revolutions per minute
s	-	second
SS	-	suspended solids

TKN	-	Total kjeldahl nitrogen
TOC	-	Total organic carbon
U.S. DA	-	United States Department of Agriculture
U.S. EPA	-	United States Environmental Protection Agency
US gal	-	United States gallon
^{o}C	-	Celsius degree
^{o}F	-	Fahrenheit degree
"	-	inch
%	-	percent

METRIC CONVERSIONS

ft x 0.3048	=	m
ft^2 x 0.0929	=	m^2
ft^3 x 0.028	=	m^3
hp x 0.7454	=	kW
Igal x 4.54	=	1 litre
Igal x 0.00454	=	m^3
Igpd/ft^2 x 0.049	=	m^3/m^2/day
Igpm x 0.0758	=	L/s
Igal x 1.20095	=	US gal
inch x 2.54	=	cm
pound x 0.454	=	kilogram
psi x 6.895	=	kN/m^2
ton (short) x 0.907	=	metric ton

238

Attachment B - Additional Sources

General Pollution Prevention and Waste Minimization:

U.S. EPA. 1993 Reference Guide to Pollution Prevention Resources. Office of Pollution Prevention and Toxics, United States Environmental Protection Agency. EPA/742/B-93-001. 1993.

U.S. EPA. Facility Pollution Prevention Guide (DRAFT). Office of Solid Waste and Risk Reduction Engineering Laboratory, United States Environmental Protection Agency. 1991.

U.S. EPA. Waste Minimization Opportunity Assessment Manual. Hazardous Waste Engineering Research Laboratory, United States Environmental Protection Agency. EPA/625/7-88/003. 1988.

Overcash, M.R. Techniques for Industrial Pollution Prevention. Lewis Publishers, Chelsea, MI. 1986.

Vegetable Oil Refining:

Appleyard, Colin J. "Industrial Wastewater Management by Control at Source and by Reclamation of Useful Materials", Industrial Water Economy, ICE, 1981.

Axberg, Claes, et.al. "Flocculation of Waste Emulsions Using Polyelectrolytes", Progress in Water Technology, Vol 12, pp. 371-384, 1980.

Bhave, Ramesh R. and Hubert L. Fleming. "Removal of Oily Contaminants in Wastewater with Microporous Alumina Membranes", New Membrane Materials and Processes for Separation, Number 261, Volume 84, American Institute of Chemical Engineers Symposium Series, 1988.

Daido, Moritsugu. "A Recovery and Reuse System for Fatty Oils from By-Products and Waste Materials of Vegetable Fatty Oil Production", Conservation and Recycling, Vol. 10, No 4., pp. 273 -278, 1987.

Eisenhauer, R. A., et.al. "Water Recycle Method for Washing Alkali-Refined Soybean Oil", Journal of the American Oil Chemists Society, Vol. 47, pp. 137-140, 1970.

Grinkevich, Alex. "Pretreatment of Vegetable Oil Refinery Waste Water", Proceedings Fifth National Symposium on Food Processing Wastes, Pacific Northwest Environmental Research Lab, Environmental Protection Agency, EPA-660/2-74-058, April, 1974.

Ho, C. C. and Y. K. Tan. "The Treatment of Anaerobically Digested Palm Oil Mill Effluent by Pressurized Activated Sludge", J. Chem. Tech. Biotechnol., Vol 41, 1988.

Ma, A. N. and A. S. H. Ong. "Treatment of Palm Oil Sterilizer Condensate by an Anaerobic Process", Biological Wastes, Vol 25, 1988.

Smallwood, Norman J. and R. A. Scott. "A Good Wastewater Treatment System", Industrial Water Engineering, Vol. 15, No. 3, pp. 22-24, 1978.

Attachment C - Abstracts

11/5/1 (Item 1 from file: 51)
DIALOG(R)File 51:Food Sci.&Tech.Abs
(c) 1994 FSTA & VITIS IFIS Publishing. All rts. reserv.

00439746 92-10-n0023 SUBFILE: FSTA
Reduction and *prevention* of environmental *pollution* generated in the *vegetable* *oil* industry.
Bauer, P. F.
Hormayrgasse 45, A-1170 Vienna, Austria
Industry and Environment--[redacted]
DOCUMENT TYPE: Journal Article
LANGUAGE: English SUMMARY LANGUAGE: French; Spanish
Environmental pollutants (waste, residues, effluents) produced in *vegetable* *oil* *processing* are described; technologies required for their proper *treatment* and prevention, and the likely investment cost are discussed. Specific aspects considered include: atmospheric pollution; pollution by *waste* materials; *water* pollution (O2 levels, suspended solids, pH, *vegetable* *oil*, nickel); aspects of plant operation which can minimize environmental pollution (ventilation, solvent recovery units, *waste* *water* *treatment*, incineration of solids and wastes); estimated costs of environmental protection; and legislation and possibilities for financing technical and legal measurements required for environmental protection. (MEC)
DESCRIPTORS: Oils vegetable--*vegetable* *oils*, *processing* & pollutants from; *Processing*--*vegetable* *oils*, *processing* & pollutants from; Pollution--*vegetable* *oils*, *processing* & pollutants from; Vegetable products
SECTION HEADINGS: Fats, oils & margarine (SC=n)

11/5/2 (Item 2 from file: 51)
DIALOG(R)File 51:Food Sci.&Tech.Abs
(c) 1994 FSTA & VITIS IFIS Publishing. All rts. reserv.

00347646 87-11-v0141 SUBFILE: FSTA
Process and plant to extract solids using organic solvents without producing effluent.)
Verfahren und Anlage zur abwasserfreien Feststoffextraktion mit organischen Loesemitteln.
Weber, K.
Extraktionstechnik Gesellschaft fuer Anlagenbau mbH
PATENT CO.: German Federal Republic Patent Application 1987
PATENT NO.: DE 35 38 745 A1
NOTE: DE 3538745 (851031) (EGA, 2000 Hamburg, FRG)
DOCUMENT TYPE: Patent
LANGUAGE: German
In oil extraction of soybeans, the *waste* *water* remaining after solvent recovery is evaporated; the steam and residues are both *recycled* into the *process*. (RAB)
DESCRIPTORS: Extraction--*soybean* *oils*, extraction of, Patent; *Soybean* *oils*--extraction of *soybean* *oils*, Patent
SECTION HEADINGS: Patent literature (SC=v)

241

11/5/3 (Item 3 from file: 51)
DIALOG(R)File 51:Food Sci.&Tech.Abs
(c) 1994 FSTA & VITIS IFIS Publishing. All rts. reserv.

00112310 76-04-g0233 SUBFILE: FSTA
Hexane solubles reduced more than 86%.
Wilson, D. L.; Stinson, W. S.
Miles Lab. Inc., Grocery Products Div., Schaumburg, Illinois, USA
Food Processing 1975 , 36 (8) 62-63
DOCUMENT TYPE: Journal Article
LANGUAGE: English
The *waste* *water* *treatment* system at the Grocery Products Div. of Miles Laboratories Inc. in Schaumburg, Illinois is described and illustrated. The plant produces meat-like vegetable protein food products. Chemical *treatment* is necessary to deal with emulsified hexane-soluble materials from the *vegetable* *oil*; waste flows through hydrated lime slurry and alum solution mixing sumps, and is injected with a polyelectrolyte solution before entering the clarifier/skimmer. Detention time in the clarifier/skimmer is about 3.5 h, sufficient for effective separation of flotable and settleable material. Hexane-solubles are reduced from 200 to 28 mg/l. (JA)
DESCRIPTORS: Proteins (unconventional)--vegetable proteins factory *wastes*, hexane solubles *reduction* in meat like; Simulated foods--vegetable proteins factory *wastes*, hexane solubles *reduction* in meat like; Solvents--vegetable proteins factory *wastes*, hexane solubles *reduction* in meat like; Wastes--vegetable proteins factory *wastes*, hexane solubles *reduction* in meat like
SECTION HEADINGS: Commodity technologies-General (SC=g)

11/5/4 (Item 4 from file: 51)
DIALOG(R)File 51:Food Sci.&Tech.Abs
(c) 1994 FSTA & VITIS IFIS Publishing. All rts. reserv.

00098600 75-06-n0259 SUBFILE: FSTA
Treatment of *vegetable* *oil* *refining* wastes to conform to government regulation.
Cantrell, M. K.; Keller, H. F., Jr.
GBK Enterprises Inc., Fullerton, California 92633, USA
Journal of the American Oil Chemists' Society 1975 , 52 (1) 13A-17A
NOTE: 2 ref.
DOCUMENT TYPE: Journal Article
LANGUAGE: English
Historical and conventional methods for the *treatment* of *vegetable* *oil* *waste* *water* are described. The results obtained and the economics of the various *processes* for oil-water separation are reported. A *process* utilizing selective adsorption filtration is described. The new regeneration procedure for cleaning the filter media allows for its total *reuse*. The *process* produces effluent water which will conform to existing government regulations for oil content. Development of the filtration/regeneration *process* is described up to full-scale installation with test results. (AS)
DESCRIPTORS: Oils (vegetable)--*vegetable* *oils* *refining* effluents, *treatment* of; *Waste* *water*--*vegetable* *oils* *refining* effluents, *treatment* of; *Refining*--*vegetable* *oils* *refining* effluents, *treatment* of
SECTION HEADINGS: Fats, oils & margarine (SC=n)

11/5/5 (Item 5 from file: 51)
DIALOG(R)File 51:Food Sci.&Tech.Abs
(c) 1994 FSTA & VITIS IFIS Publishing. All rts. reserv.

00081329 74-06-j0790 SUBFILE: FSTA
MUSIC NOTE14 000 per year by-product recovery.
Bleakley, A.; Stinson, W. S.
Vegetable Oil Div., Cargill, Inc., Chicago, Illinois, USA
Food Processing 1974 , 35 (1) 84-85
DOCUMENT TYPE: Journal Article
LANGUAGE: English
Details are given of a flotation cell type waste *treatment* system with a special solubilization column installed at the Chicago *Vegetable* *Oil* Division Plant of Cargill, Inc., to recover *soybean* *oil* and floatable solids from the *wastewater* and *reduce* loadings to aeration lagoons. About 350 lb of *soybean* *oil* (worth 20 cents/lb) is recovered per day be the system. BOD of the *waste* *water* has been reduced from approx. 1000 to 5 ppm; suspended solids has been reduced from nearly 7000 to 10 ppm. (AA)
DESCRIPTORS: *soybean* *oil*--*waste* *water*, recovery of *soybean* *oil* from; *waste* *water*--*soybean* *oil* recovery from *waste* *water* ; by-products--oil by-products , recovery of
SECTION HEADINGS: Fruits, vegetables & nuts (SC=j)

11/5/6 (Item 6 from file: 51)
DIALOG(R)File 51:Food Sci.&Tech.Abs
(c) 1994 FSTA & VITIS IFIS Publishing. All rts. reserv.

00020151 70-08-n0322 SUBFILE: FSTA
Water *recycle* method for washing alkali-*refined* *soybean* *oil*.
Eisenhauer, R. A.; Beal, R. E.; Griffin, E. L., Jr.
Northern Regional Res. Lab., Peoria, Illinois 61604, USA
Journal of the ~~American Oil Chemists' Society~~ 1970 , 47 (4) 137-40
NOTE: 4 ref.
DOCUMENT TYPE: Journal Article
LANGUAGE: English
Vegetable *oil* *refineries* are faced today with cutting down on pollution caused by their *waste* *water*. A method was developed for washing alkali-*refined* *soybean* *oil* with treated, recirculated wash water. In this method, wash water passes through a cation exchange resin that removes Na, and the slightly acid water goes back into the system for continuous *reuse*. The disposal problem arising from current industrial practice can be largely or entirely avoided by this *reuse* method. The new method might well be applicable to other oilseed *processing*. Batch tests were first made by mixing water, alkali-*refined* *soybean* *oil* and cation exchange resin. The amount of Na in the *soybean* *oil* was reduced from 34 to LESS THAN 0.5 ppm. In continuous washing tests conducted in a Podbielniak contactor with water treated by a cation exchange resin, the Na level of a commercially *refined* oil (not water-washed) was reduced from 34 ppm to LESS THAN 1.5 ppm. These reults are comparable to or better than those obtained by the conventional method of employing fresh water for washing *soybean* *oil*. (AS)
DESCRIPTORS: water--Recirculation of water for washing of *soybean* *oil* ; cleaning--Recirculation of water for washing of *soybean* *oil* ; *soybean* *oil*--Recirculation of water for washing of *soybean* *oil* ; Ion exchange-- Ion exchange for removal of Na from *waste* *water*; sodium-- Ion exchange for removal of Na from *waste* *water*; *wastes*-- Ion exchange for removal of Na from *waste* *water*
SECTION HEADINGS: Fats, oils & margarine (SC=n)

11/5/7 (Item 1 from file: 40)
DIALOG(R)File 40:Enviroline(R)
(c) 1994 CIS, Inc. All rts. reserv.

00243685 ENVIROLINE NUMBER: 93-02138
Olive Oil Mill Effluent (OOME). New Substrate for Biosurfactant Production
Mercade, M. E., Univ of Barcelona, Spain; Manresa, M. A.; Robert, M.;
Espuny, M. J.; de Andres, C.; Guinea, J.
JOURNAL: Bioresour Technol v43, n1, p1(6)
PUBLICATION DATE: 1993
DOCUMENT TYPE: research article LANGUAGE: English

ABSTRACT: The utility of olive oil mill effluent as a raw material in biosurfactant production was investigated. Several biosurfactant-producing strains were evaluated, and some strains of +i Pseudomonas +r sp. were able to grow on the effluent as the sole carbon source and to accumulate rhamnolipids. The conversion yield was 0.058 g of rhamnolipid/g of effluent substrate as calculated from initial COD values. The COD of olive oil mill effluent was reduced by about 50% in 72 h.

SPECIAL FEATURES: 3 graph(s); 31 reference(s); 4 table(s)
MAJOR DESCRIPTORS: *FOOD* *OILS*; SURFACTANTS; BIOLOGICAL *TREATMENT*; *WASTEWATER* ANALYSIS; *WASTEWATER* *REUSE*
MINOR DESCRIPTORS: CHEMICAL OXYGEN DEMAND; FOOD WASTES
REVIEW CLASSIFICATION: 19

11/5/8 (Item 2 from file: 40)
DIALOG(R)File 40:Enviroline(R)
(c) 1994 CIS, Inc. All rts. reserv.

00067170 ENVIROLINE NUMBER: 79-04769
Evaluation of Physical-Chemical Technologies for Water *Reuse*, Byproduct Recovery and *Wastewater* *Treatment* in the Food *Processing* Industry
JOURNAL: [redacted] (181)
PUBLICATION DATE: Apr 79
DOCUMENT TYPE: 1FOOD PRODUCTS special , LANGUAGE: English

ABSTRACT: Physical, physical-chemical, and advanced *treatment* technologies applicable to the waste *treatment* problems of the Canadian food *processing* industry are discussed. Areas within the food industry where *water* and *wastewater* conservation methods could be applied are identified. Advances in by-product recovery technologies that can simultaneously reduce effluent strength and produce a marketable commodity are described. A range of pilot and full scale installations of such technologies, operating problems, and *process* efficiencies are considered. Technologies evaluated include: centrifugation, flotation, hydrocloning, evaporation, precipitation, chemical coagulation, chemical oxidation, wet oxidation, solvent extraction, and dialysis. (36 diagrams, 17 references,

MAJOR DESCRIPTORS: *FOOD* *OILS*; FLOTATION; FOOD WASTES; CHEMICAL PRECIPITATION; ULTRAFILTRATION; REVERSE OSMOSIS; BEVERAGES; MEAT *PROCESSING*; DAIRY PRODUCTS; RESOURCE RECOVERY; FOOD *PROCESSING*; *WASTEWATER* *REUSE*, INDUSTRIAL; PHYSICOCHEMICAL *TREATMENT*; SIC 20
REVIEW CLASSIFICATION: 19

11/5/9 (Item 3 from file: 40)
DIALOG(R)File 40:Enviroline(R)
(c) 1994 CIS, Inc. All rts. reserv.

00052042 ENVIROLINE NUMBER: 77-04126
Design and Performance of Physical-Chemical and Activated Sludge *Treatment* for an Edible Oil Plant
Adams, Carl E., Assoc Water and Air Resources Engineers, Tenn; Stein, Robert M.; Joseph, Joel J.; Walsh, Thomas
JOURNAL: Presented at Purdue Univ 30th Industrial Waste Conf, Lafayette p457(8)
PUBLICATION DATE: May 6-8 75
DOCUMENT TYPE: technical report LANGUAGE: English

ABSTRACT: The *wastewater* *Management* Program at the glidden-durkee industrial foods plant in joliet, ill., is reviewed. The plant *processes* and *refines* vegetables oils. Through the combined efforts of operating personnel, supervising personnel, and engineering groups, it was possible to upgrade operations significantly.

SPECIAL FEATURES: 2 diagram(s); 5 graph(s); 5 table(s)
MAJOR DESCRIPTORS: AERATED LAGOONS; BIOCHEMICAL OXYGEN DEMAND; GREASES; FLOTATION; CONF PAPER; SUSPENDED SOLIDS; ACTIVATED SLUDGE; PRIMARY *TREATMENT*; SECONDARY *TREATMENT*; *FOOD* *OILS*; *WASTEWATER* *MANAGEMENT*; FOOD WASTES
REVIEW CLASSIFICATION: 19

11/5/10 (Item 4 from file: 40)
DIALOG(R)File 40:Enviroline(R)
(c) 1994 CIS, Inc. All rts. reserv.

00036364 ENVIROLINE NUMBER: 75-05760
Proceedings of National Symposium on Food *Processing* Wastes (5th) Held in Monterey, California on 17-19 April 1974
JOURNAL: NTIS Report Pb-237 520 (327)
PUBLICATION DATE: Jun 74
DOCUMENT TYPE: special report LANGUAGE: English

ABSTRACT: Topics covered at the symposium include: *wastewater* characterization for the specialty food industry; *treatment* of shrimp *processing*, rum distillery, *vegetable* *oil* *refinery*, and meat *processing* *wastewaters*; *process* modifications for cleaning and peeling tomatoes, and blanching and cooling vegetables; by-product recovery from meat *processing* wastes, fish *processing* wastes, and activated sludge; *wastewater* *reuse* in poultry *processing*; and economics of treating fruit and vegetable *processing* *wastewaters*. (Full text available from Congressional Information Service.)

MAJOR DESCRIPTORS: SHRIMP; MEAT PRODUCTS; TOMATOES; FISH; ACTIVATED SLUDGE; *WASTEWATER* *REUSE*, INDUSTRIAL; POULTRY PRODUCTS; ECONOMICS, ENV-WATER; SIC 20; FOOD PRODUCTS; CONF PROCEEDINGS; FOOD *PROCESSING*; *WASTEWATER* *TREATMENT*
REVIEW CLASSIFICATION: 19

245

11/5/11 (Item 1 from file: 117)
DIALOG(R)File 117:Water Resour.Abs.
(c) format only 1994 Dialog Info.Svcs. All rts. reserv.

610434 W89-12521
Fruit, Grain, and Vegetable Wastes
Borup, M. B.; Potter, G. W.
Brigham Young Univ., Provo, UT. Dept. of Civil Engineering.
'Journal Water Pollution Control Federation JWPFA5, Vol. 61, No. 6, p 858-860, June 1989. 45 ref.,
Journal Announcement: SWRA2212
Studies on the waste treatment of fruit, grain, and vegetable wastes are reviewed including discussions on design, operation, optimization and regulatory issues. For the fruit industry case studies using apple pumice and olive black water are discussed in regard to treatment efficiencies. The magnitude and composition of wastes from corn processing plants and the use of trickling filters, extended aeration, activated sludge, reverse osmosis, ultrafiltration, and rotating biological contactors are discussed. In the area of vegetable processing recovery and reuse of vegetable fats and oils from waste materials of vegetable oil refining, degradation of onion wastes, pea and potato processing, and associated treatment processes are reviewed. Anaerobic digestion, process control and operating problems, and the use of thermophilic fungi to decolorize a molasses wastewater are discussed for sugar and molasses processing. (White-Reimer-PTT)
Descriptors: *Literature review ; *Food processing industry ; *Wastewater

than for domestic wastewater. Given the demonstrated biodegradability of food oil and grease materials the BOD test will measure the amount of oxygen required for treatment and removal. Associated costs can be recovered by surcharges to the appropriate user. (See also W89-10858) (Lantz-PTT)

Descriptors: *Pretreatment of waste ; *Wastewater treatment ; *Grease ; *Oil ; *Pollutant identification; Biological wastewater treatment ; Biological treatment ; Regulations ; Biochemical oxygen demand ; Wastewater facilities

Section Heading Codes: 5D (Water Quality Management and Protection--Waste Treatment Processes); 5A (Water Quality Management and Protection--Identification of Pollutants)

11/5/13 (Item 3 from file: 117)
DIALOG(R)File 117:Water Resour.Abs.
(c) format only 1994 Dialog Info.Svcs. All rts. reserv.

608851 W89-10938

Centralized Treatment of Nonhazardous Wastes: an Alternative Means of Liquid Waste Disposal

Miller, M. W.; Lo, M. P.; Wienke, S. S.; Kremer, J. G.
Los Angeles County Sanitation Districts, Whittier, CA.

IN: Proceedings of the 43rd Industrial Waste Conference, May 10-12, 1988, Purdue University, West Lafayette, Indiana. Lewis Publishers, Chelsea, Michigan, 1989. p 769-776, 4 fig, 8 tab, 1 ref.,

Journal Announcement: SWRA2210

Sewerage agencies like the Sanitation Districts of Los Angeles County will continue to require a minimum of gravity separation pretreatment facilities for industrial dischargers. These gravity separators (interceptors, sumps or traps) produce quantities of grit-sediments and oil and grease materials that are either settled or floated in the pretreatment devices. The majority of these residue materials can be classified as nonhazardous wastes. A company within the Sanitation Districts of Los Angeles which previously handled wastes from restaurant grease traps recently expended its operation to be a centralized waste treatment facility for nonhazardous wastes. This company has installed improved pretreatment facilities to treat animal and vegetable oils and greases as well as mineral-based oils and greases with associated sediments. The treatment process essentially removes sediments and oils and greases from the water and produces a clarified wastewater suitable for sewer disposal. The vegetable and animal oils and greases are recycled as an animal feed additive. The sediments are

11/5/14 (Item 4 from file: 117)
DIALOG(R)File 117:Water Resour.Abs.
(c) format only 1994 Dialog Info.Svcs. All rts. reserv.

594125 W88-07502
Removal of Oily Contaminants in Wastewater with Microporous Alumina Membranes
Bhave, R. R.; Fleming, H. L.
Alcoa Separations Technology Division, Warrendale, PA 15086.
~~AIChE Symposium Series~~, Vol. 84, No. 261, p 19-27, 1988. 8 fig, 3 tab, 17 ref.,
Journal Announcement: SWRA2109
The discharge of industrial wastewaters containing oily contaminants such as motor oils, greases, and vegetable oil processing wastes into the sewer is regulated by increasingly tighter state and federal environmental standards. The feasibility of utilizing Membralox alumina membranes for oil and grease removal from a typical industrial wastewater stream was investigated. some performance data such as the quality of permeate produced, permeate flux, and water permeability with Membralox alumina membranes are presented. It was found that microporous alumina membranes are suitable for the removal of oil, grease, and particulate matter from these wastewaters. The permeate (filtrate) was found to contain only 3 to 5 mg/L of oil and grease. The flux of filtered wastewater through Membralox alumina membranes was found to be highly stable. Backflushing was found to be effective in maintaining high flux values, whereas a higher cross-flow velocity resulted in higher flux with no appreciable flux decay over longer periods of operation. Alumina membranes were also found useful in dewatering oily wastewaters and more than 90% reduction in original volume was obtained without any significant decay. (Friedmann-PTT)
Descriptors: *Wastewater treatment ; *Industrial wastewater ; *Oily water ; *Filtration ; *Membrane filters; Membrane processes ; Grease ; Permeability ; Fluctuation ; Water quality control ; Filtered wastewater ; Particulates ; Alumina membranes
Section Heading Codes: 5D (Water Quality Management and Protection--Waste Treatment Processes)

11/5/15 (Item 5 from file: 117)
DIALOG(R)File 117:Water Resour.Abs.
(c) format only 1994 Dialog Info.Svcs. All rts. reserv.

171488 W85-00684
Hydrogen Peroxide in Municipal, Landfill and Industrial Effluent Treatment
Fraser, J. A. L.; Sims, A. F. E.
Effluent and Water Treatment Journal, Vol. 24, No. 5, May, 1984. 3 Tab, 8 Ref.,
Journal Announcement: SWRA1802
Hydrogen peroxide is a relatively strong chemical oxidant and in addition provides a direct source of oxygen. Oxidation potentials are given in comparison with other oxidants. In the United Kingdom where sulfate levels of 250 to 500 mg/l have developed in sludge due to sulfate enrichment of sewage by sea water, hydrogen peroxide has been injected into the sludge stream during primary tank desludging. In practice, usually between 2 and 5 moles hydrogen peroxide:1 mole sulfide in sludge are required for effective treatment. Hydrogen peroxide is used for controlling odor in lagoons, for controlling microbial growth in streams and handling industrial effluents from cellophane manufacture, food manufacture, oil refinery wastes, tar distilleries, paint stripping effluents, pharmaceutical manufacturers, tin plating of steel, acrylonitrile manufacture, heat treatment salts, and

industry
Section Heading Codes: 5D (Water Quality Management and Protection--Waste Treatment Processes)

11/5/16 (Item 6 from file: 117)
DIALOG(R)File 117:Water Resour.Abs.
(c) format only 1994 Dialog Info.Svcs. All rts. reserv.

154871 W82-00841
Low-Cost Wastewater Treatment
Morris, C. E.
~~Food Engineering,~~ Vol. 53, No. 7, p 51-56, July, 1981. 3 Fig.,
Journal Announcement: SWRA1502
The nation's largest independent vegetable oil refinery located in Opelousas, Louisiana, designed and built wastewater treatment facilities to meet federal requirements in one year. Simplicity and redundancy were the keys to designing and building a system to handle both current and future flows. The engineering team hired by the company acted as its own design engineer and general contractor, but used some outside consultants. This approach helped keep costs at 2.2 million. The plant was designed to treat 121,000 gal/day and to handle increased effluent load in the future. Costs were also reduced by using simple oil/water separators in the form of gravity-separation decanters built of fiberglass reinforced plastic. Redundancy in the system permits components to be shut down for cleaning or repair without disrupting the system operation. All pumps were installed in pairs so system operation will not be jeopardized by pump failure. The system treats three wastewater streams: process wastewater, rainwater runoff, and cooling water. Chemical, mechanical, and biological processes are used. Oil residues collected by the stream are approved for soil enrichment. (Small-FRC)
Descriptors: *Food-processing wastes ; *Wastewater facilities ; *Construction costs; Food processing industry ; Industrial wastes ; Costs ; Oily water ; Separation techniques ; Runoff ; Cooling water ; Wastewater treatment ; Vegetable oil refinery
Section Heading Codes: 5D (Water Quality Management and Protection--Waste Treatment Processes)

11/5/17 (Item 7 from file: 117)
DIALOG(R)File 117:Water Resour.Abs.
(c) format only 1994 Dialog Info.Svcs. All rts. reserv.

152159 W81-04409
Flocculation of Waste Emulsions Using Polyelectrolytes
Axberg, D.; Wennerburg, A-M.; Stenius, P.
Swedish Inst. for Surface Chemistry, Stockholm.
~~Progress in Water Technology~~, Vol 12 No 6, p Tor 371-384, 1980. 10 Fig, 2 Tab, 9 Ref.,
Journal Announcement: SWRA1419
Three cationic polyelectrolytes (Zetag 92, Polymin SN, and Chitosan) were used to flocculate dilute oil/water emulsions of soybean oil, typical of waste water from the edible fats industry. Optimum floc formation depended on structure and charge density of the polyelectrolyte, emulsifier concentration, alkyl chain length, and ionic strength. Although all three polyelectrolytes formed flocs, Chitosan produced the strongest and largest flocs with a smaller dose than the other materials. Increasing the soybean oil level from 1000 to 4000 ppm increased the optimum dose 10-12 times. To test the effect of alkyl chain length on optimum dose, a series of alkyl sulfate emulsifiers with chain lengths of C10, 12, and 14 were interacted with Chitosan in oil emulsions. Theoptimum dose of polyelectrolyte increased with chain length--C10, 3 ppm; C12, 50 ppm; and C14, 120 ppm. Addition of NaCl broadened the range of large floc formation for C12, but drastically increased the required dose of Chitosan for C14. Under optimum

conditions, turbidity of the oil emulsion was decreased by better than 99.5%..

Descriptors: *Oil wastes ; *Polyelectrolytes ; *Flocculation ; *Waste water treatment; Surfactants ; Emulsions ; Turbidity ; Organic wastes ; Emulsifiers ; Ions ; Polymers ; Organic compounds ; Chitosan

Section Heading Codes: 5D (Water Quality Management and Protection--Waste Treatment Processes)

11/5/18 (Item 8 from file: 117)
DIALOG(R)File 117:Water Resour.Abs.
(c) format only 1994 Dialog Info.Svcs. All rts. reserv.

137153 W79-07046

Evaluation of an Extended Aeration Process for Skokomish Salmon Processing Wastewater Treatment

Lin, S. S.; Liao, P. B.
Kramer, Chin, and Mayo, Inc., Seattle, WA.

Available from the National Technical Information Service, Springfield, VA 22161 as PB-292 750, Price codes: A07 in paper copy, A01 in microfiche. Report EPA-600/2-79-027, 1979. 128 p, 18 fig, 13 tab, 10 ref, 3 append.,

Journal Announcement: SWRA1215

Waste water characteristics for hand-butchered salmon processing determined that small salmon processing generated more waste water flow and higher pollutant contents per kkg of fish processed than did large salmon processing. For both cases, waste water flows and pollutant concentrations were highly variable. For full-scale plant operation, removal efficiencies of BOD, COD, suspended solids, grease and oil, and ammonia for small fish processing were similar to those for large fish processing. Higher removal efficiencies for nitrogen and lower removal efficiencies for phosphorus during large fish processing were the result of low flow resulting in longer detention times and overaeration. The effect of shorter detention times was investigated in a pilot plant study. Pilot plant removal efficiencies were similar to those for the full-scale plant for COD, BOD, TKN, and ammonia, but higher for solids, grease and oil, and phosphorus. The shorter detention time and proper overflow rate resulted in higher removal efficiencies for suspended solids, oil and grease, and phosphate. During long periods of processing plant shutdown, artificial feeding with fish food and no feeding were [illegible]

industry waste waters, waste water reuse, use of ligmosulfonic acid for removal of protein and fat from meat slaughtering and packing wastes, treatment of rum distillery slops, shrimp plant waste water, use of wastes as animal feed stock, fishery byproduct utilization, pretreatment of vegetable oil refinery wastes, economic effects of treating fruit and vegetable processing liquid wastes, and waste water characterization for the specialty food industry. (Davison-IPA)

Descriptors: *Food processing industry ; *Conferences ; *Industrial wastes ; *Waste water treatment ; *Waste treatment; Anaerobic digestion ; Liquid wastes ; Water pollution sources ; Solid wastes ; Sludge disposal ; Effluents ; Activated sludge ; Biodegradation ; Byproducts ; Organic wastes ; Costs ; Economic impact ; Land management ; Biological treatment ; Water reuse

Section Heading Codes: 5D (Water Quality Management and Protection--Waste Treatment Processes); 3E (Water Supply Augmentation and Conservation--Conservation in Industry)

11/5/20 (Item 10 from file: 117)
DIALOG(R)File 117:Water Resour.Abs.
(c) format only 1994 Dialog Info.Svcs. All rts. reserv.

127299 W78-10192

A Good Wastewater Treatment System

Smallwood, N. J.; Scott, R. A.
Lou Ana Foods, Inc., Opelousas, LA.

~~Industrial Water Engineering~~, Vol. 15, No. 3, p 22-24, 1978.,
Journal Announcement: SWRA1121

Collection, storage, and treatment methods for process water, surface runoff, and cooling tower water are described for the Lou Ana Foods, Inc., vegetable oil refinery in Opelousas, Louisiana. Process waste water, containing oil, processing reagents, and sludge, flows by gravity to a sump for collection, mixing, and pH adjustment. Storm runoff, containing oils from machinery and spills, is contained by concrete mats and dikes; subsurface drains carry the runoff to a sump adjacent to the processing waste sump. The flow of runoff to the sump is interrupted by a pneumatic-electronic signal when a preset rainfall level is reached; rain water is allowed to overflow the sump. The oil-bearing process water is acidified and pumped to two parallel decanters followed by two decanters in

Commission. Other alternatives to ocean disposal of sludge, which has been banned by the Environmental Protection Agency, are: transporting sludge to the desert for drying and composting, mechanical dewatering and composting, mechanical dewatering, pyrolyzing, and ocean disposal in deeper trenches. The Garver-Greenfield process is capable of generating fuel; it requires 300 Btus to dewater 1 lb of liquid in sludge, compared to 1,600 Btus/lb of water required by an Organic Recycling recovery process. In the Garver-Greenfield process, sludge is dewatered to 20% solids content on a filter press or centrifuge and mixed with *vegetable oil* if the sludge will be used as a food supplement or with fuel oil if it is to be incinerated. The sludge with an oil-to-solids ratio of 10:1 undergoes evaporation in multiple-effect units and is separated into solids and oil by settling or centrifuging. More than 90% of the oil is recovered and the liquid fraction is returned to the treatment plant. A 100 ton/day Garver-Greenfield system will cost an estimated $4.5 million or $10.4 million with energy generation for producing electricity. (Lisk-FIRL)

Descriptors: *Sludge treatment ; *Sludge disposal ; *Dewatering ; *Drying ; *Sewage sludge; Filtration ; Centrifugation ; Outfall sewers ; Waste water treatment ; California ; Municipal wastes

Section Heading Codes: 5E (Water Quality Management and Protection--Ultimate Disposal of Wastes); 5D (Water Quality Management and Protection--Waste Treatment Processes)

11/5/22 (Item 12 from file: 117)
DIALOG(R)File 117:Water Resour.Abs.
(c) format only 1994 Dialog Info.Svcs. All rts. reserv.

122617 W78-05508

Treating Aqueous Effluent Containing Dissolved or Dispersed Dye--by Adding Magnesium Oxide then Separating

Belgian Patent BE-854-688. Issued May 20, 1976. Derwent Belgian Patents Abstracts, Vol Y, No 47, p 2, November, 1977.,

Journal Announcement: SWRA1112

A patent has been issued for a treatment process for effluent from the textile dyeing and tanning industries. Aqueous effluent containing dissolved or dispersed dye is treated with magnesium oxide, preferably after the pH of the effuent has been adjusted to pH 6-8. A process such as decantation, filtration, or centrifugation is then used to separate the solid wastes from the liquid. The addition of magnesium oxide has also been found to be effective in the treatment of effluent from printing industries. When applied to effluent from this industry, the process has yielded favorable result in removing waxes, pastes, or vegetable oils from the waste liquid. The magnesium oxide treatment is considered more effective at color removal than conventional treatment processes. (Lisk-FIRL)

Descriptors: *Textiles ; *Tannery wastes ; *Dye dispersion ; *Magnesium compounds ; *Patents ; *Separation techniques; Industrial wastes ; Filtration ; Centrifugation ; Waste water treatment

Section Heading Codes: 5D (Water Quality Management and Protection--Waste Treatment Processes)

BEST AVAILABLE COPY

11/5/23 (Item 13 from file: 117)
DIALOG(R)File 117:Water Resour.Abs.
(c) format only 1994 Dialog Info.Svcs. All rts. reserv.
122385 W78-05276
Along the Water Cleanup Road
Environmental Science and Technology, Vol 11, No 13, p 1150-1152, December, 1977.,
Journal Announcement: SWRA1112
As of July 1, 1977, approximately 3400 of 4000 industrial plants were in compliance with 'best practical' waste treatment requirements. Pretreatment of industrial wastes discharged to sewers is being required more often. One new technology uses specially developed bacterial strains to degrade lubricating and vegetable oils, animal fats, and greases. An activated carbon-activated sludge process is being used to treat effluent containing acids, heavy metals, organic dyes, and background solids and salts at the Du Pont Chambers Works at Deepwater, New Jersey. Techniques being studied for sludge disposal include land disposal, fluidized-bed combustion, and co-pyrolysis with refuse. A vortex Clarifier is available from Bird Machine Company, Inc., of South Walpole, Massachusetts, for removing fine suspended solids rapidly. A rugged monitor for total organic carbon which is claimed to be free of dissolved solids problems is available from Envirotech/Dohrmann, Santa Clara, California. Possible new software includes computers to control and simulate treatment systems. (Snyder-FIRL)
Descriptors: *Chemical wastes ; *Municipal wastes ; *Activated sludge ; *Sewerage; Biological treatment ; Sewage treatment ; Equipment ; Industrial wastes ; Waste water disposal ; Waste water treatment
Section Heading Codes: 5G (Water Quality Management and Protection--Water Quality Control); 5D (Water Quality Management and Protection--Waste Treatment Processes)

11/5/24 (Item 14 from file: 117)
DIALOG(R)File 117:Water Resour.Abs.
(c) format only 1994 Dialog Info.Svcs. All rts. reserv.

121601 W78-04492
Effect of Grease on Wastewater Treatment Unit Processes
Banerji, S. K.
Missouri Univ., Columbia. Dept. of Civil Engineering.
Available from the National Technical Information Service, Springfield, VA 22161 as PB-278 049, Price codes: A02 in paper copy, A01 in microfiche. Missouri Water Resources Research Center, Rolla, Completion Report, January 1978. 15 p, 4 fig, 4 tab, 14 ref. OWRT A-100-MO(1). 14-34-0001-7054.,
Journal Announcement: SWRA1110
The objective was to determine the levels of grease and oil in raw sewage that affect the settling characteristics of suspended solids in raw sewage and sludge thickening. Raw sewage from City of Columbia, Mo., Trickling Filter plant was used to determine settling behavior of suspended solids in raw sewage in presence of various levels of grease and oils. The settling tests were performed in 7 1/2 inch diameter and about 3' long plexiglas columns. The procedure used to determine the settleability of these flocculant suspensions was to measure the suspended solids concentration at various depth at different times after the quiescent settling was started. Sludge for the thickening experiment was obtained from City of Columbia, Mo., Activated Sludge Plant. The activated sludge was allowed to settle in a 4 inch diameter settling column. The zone settling velocity of the sludge-water interface was determined in presence of varying concentration of grease and oil. For settling tests at elevated grease levels, additional grease in the form of 1:1 mixture of cooking corn oil and commercial motor oil was added to the sludge and sewage under test. The conclusions are: (1) Levels of grease higher than about 50 mg/l may interfere with flocculant settling of raw sewage solids and reduce the efficiency of primary clarification. However, at levels of grease higher than 120 mg/l the solids removal efficiency is restored and these high grease levels do not

interfere with raw sewage particle flocculant settling. (2) Presence of high levels of grease (> 100 mg/l) actually promotes activated sludge thickening. However at these high levels of grease the sludge bulks initially and clarification is poor. The presence of grease up to 100 mg/l does not appear to have any negative effects on clarification behavior of sludge.

Descriptors: *Grease ; *Oil ; *Waste water treatment ; *Settling basins ; *Sludge thickening ; *Sewage treatment ; *Flocculation(Settling); Missouri ; Treatment facilities

Section Heading Codes: 5D (Water Quality Management and Protection--Waste Treatment Processes)

11/5/25 (Item 15 from file: 117)
DIALOG(R)File 117:Water Resour.Abs.
(c) format only 1994 Dialog Info.Svcs. All rts. reserv.

121524 W78-04415

Treatment of Effluent Waters from Vegetable Oil Refining

Gill, D. F. Jr; Ielase, J. C.

Archer Daniels Midland Co., Decatur, IL.

Available from the National Technical Information Service, Springfield, VA 22161 as PB-266 875, Price codes: A05 in paper copy, A01 in microfiche. Report EPA-600/2-76-294, December, 1976. 89 p, 24 fig, 22 tab, 3 ref, 3 append.,

Journal Announcement: SWRA1110

The Archer Daniels Midland Company, Inc., operates a plant at Decatur, Illinois to extract and refine oil from seeds, primarily soybeans. The extraction plant produces 150,000 gpd of waste water; the refinery produces 134,000-183,000 gpd. A study was undertaken to identify the waste streams, characterize the waste water, and determine and implement optimum treatment. Surface skimming as the only treatment resulted in an original BOD loading of 0.0135 kg/kg of oil processed. Refinery washwater was the largest source of BOD and fat; cooling tower blowdown and water from acidulation contributed smaller amounts. Pretreatment of the wash water by adding 0.25% calcium chloride and adjusting the pH to 5-6 was capable of reducing the overall BOD by 71%. Process modifications, increased production supervision, and a clarifier for controlling process upsets produced a further 50% reduction in BOD, bringing the waste strength to within municipal discharge limits. The annual operating cost for the system was $75,000; byproduct recovery revenues ranged $20,000-$180,000/yr. (Snyder-FIRL)

Descriptors: *Oilseed crops ; *Industrial wastes ; *Chemical precipitation ; *Treatment facilities; Pollutant identification ; Soybeans ; Biochemical oxygen demand ; Annual costs ; Income ; Waste water treatment

Section Heading Codes: 5D (Water Quality Management and Protection--Waste Treatment Processes)

11/5/26 (Item 16 from file: 117)
DIALOG(R)File 117:Water Resour.Abs.
(c) format only 1994 Dialog Info.Svcs. All rts. reserv.

119139 W78-02030

The Application of Thin-Layer Chromatography to Waste Water Analyses Using the Determination of Low Volatility Petroleum-Hydrocarbon Compounds as an Example (Die Anwendung der Duennschichtchromatographie in der Abwasseranalytik am Beispeil der Bestimmung schwerfluechtiger Mineraloel-Kohlenwasserstoffe)

Goebgen, H. G.; Brockmann, J.

Stadt Cologne (West Germany). Abwasserlaboratorium.

Vom Wasser, Vol. 48, p 167-178, 1977. 3 fig, 14 ref.,

Journal Announcement: SWRA1105

A thin-layer chromatographic method has been developed for the determination of higher boiling-point petroleum components, such as paraffins and napthenes, which have been extracted from sewage and industrial effluents with carbon tetrachloride. Details of the method and its limitations are presented. The presence of other extractable components such as vegetable oils and fats, additives, surfactants, aromatics, and sulfides should not interfere with determinations. The method should provide a rapid, simple, inexpensive means of identifying fuel oil, light lubricating oil, and other heavier oils in waste water. (Schulz-FIRL)

Descriptors: *Water analysis ; *Chromatography ; *Laboratory tests ; *Oil wastes ; *Organic compounds ; *Pollutant identification; Industrial wastes ; Chemical analysis ; Analytical techniques ; Waste water treatment ; Thin-layer chromatography

Section Heading Codes: 5A (Water Quality Management and Protection--Identification of Pollutants); 5D (Water Quality Management and Protection--Waste Treatment Processes)

11/5/27 (Item 17 from file: 117)
DIALOG(R)File 117:Water Resour.Abs.
(c) format only 1994 Dialog Info.Svcs. All rts. reserv.

118529 W78-01420
City Fights Grease and Odor Problems in Sewer System
Public Works, Vol. 108, No. 10, p 74-75, October, 1977.,
Journal Announcement: SWRA1104

Heavy loadings of grease and oil into the 88 miles of sewage collection lines in Burlingame, California, created a need to evaluate alternative means of cleaning lines and lift stations of grease accumulations. Grease-dissolving agents tested included solvents, detergents, enzymes, and other chemical products. The studies indicated that special bacteria cultures from Bower Industries, Inc., (sold under the name DBC Plus Dried Bacteria Cultures) offered the most effective solution to the problem. A pilot study was initiated at two selected pumping stations with average daily flows of 23,000 and 90,000 gal. Of the several bacteria formulas offered by Bower Industries, the type A culture designed for use with domestic sewage was chosen for use. Seven days of heavy application of the culture were required in the initial treatment phase, followed by maintenance doses of 1 lb of culture every three days for the 23,000-gpd station and 3 lbs of culture every three days for the 90,000-gpd station. The cultures, formulated for use with animal and vegetable oils and petroleum derivatives, were added to the pumping stations as a slurry with a water:dry culture ratio of 2:1. A 1-2 hr presoak period is required to fully activate the lyophilized and air-dried cultures. Ammonium phosphate was added to the slurry to insure adequate supplies of nitrogen and phosphorus for the bacteria during the initial heavy cleanup stage. Additional beneficial side effects of the grease removal program included easier servicing of submersible pumps and reduction of odors. (Schulz-FIRL)

Descriptors: *Bacteria ; *Sewers ; *Oil wastes ; *Anaerobic digestion ; *Microorganisms; Operation and maintenance ; Sewerage ; Pumping ; Nitrogen ; Phosphorus ; Conveyance structures ; Sewage treatment ; Waste water treatment

Section Heading Codes: 5G (Water Quality Management and Protection--Water Quality Control); 5D (Water Quality Management and Protection--Waste Treatment Processes)

11/5/28 (Item 18 from file: 117)
DIALOG(R)File 117:Water Resour.Abs.
(c) format only 1994 Dialog Info.Svcs. All rts. reserv.
117216 W78-00107
The Meat Packing Plant Waste Disposal Problem
Eldridge, E. F.
Michigan Engineering Experiment Station, East Lansing.
Bulletin 105, December 1946. 50 p., 16 fig, 4 tab, 21 ref.,
Journal Announcement: SWRA1101

General methods of waste disposal for meat packing plants (including slaughter-houses) are discussed for both the small and large plant. The chief organic matter dealt with include blood, manure, hair, dirt and grease washed from the floor and equipment. Standards for emitting effluent to streams and to a city treatment plant are discussed. Advice on procedure of selecting a treatment method is given and categorized into 3 groups: those (1) containing salable materials, (2) which can be discharged directly, and (3) which must be treated. Two treatment processes are advised and discussed for the small plant: biological filtration and superchlorination preceded by elementary primary treatment, and effective grease removal. Methods of primary and secondary treatment for large plants are discussed; some design criteria for the different units and processes are included. (Prodehl EPA, Corvallis)

Descriptors: *Industrial wastes ; *Food processing industry ; *Waste water treatment ; *Treatment facilities ; *Activated sludge ; *Flotation; Anaerobic digestion ; Biological treatment ; Water pollution treatment ; Biochemical oxygen demand ; Oil wastes ; Pretreatment(Water) ; Screens ; Sedimentation ; Septic tanks ; Waste identification ; Design criteria ; Chlorination

Section Heading Codes: 5D (Water Quality Management and Protection--Waste Treatment Processes)

11/5/29 (Item 19 from file: 117)
DIALOG(R)File 117:Water Resour.Abs.
(c) format only 1994 Dialog Info.Svcs. All rts. reserv.
110317 W77-06210
Fast Payout from In-Plant Recovery of Spent Solvents
Teale, J. M.
Teale (J. W.) Associates, Woodcliff Lake, N. J.
Chemical Engineering, Vol. 84, No. 3, p 98-100, January, 1977. 1 fig.,
Journal Announcement: SWRA1013

A solution is proposed for the problem of solvent shortage and disposal of solvent wastes experienced by a small printing company. A small distillation unit to recover solvents was designed, capital equipment and operating costs were established, and the merit of the system, based on annual savings, was considered in this plan for inhouse recovery. The system is operated with existing personnel and meets insurance company and enforcement agency standards. The design criteria for the system include single-shift operation, washings composition of 90% ethyl alcohol and 10% n-propyl acetate, provision of a tower to chill and recycle cooling water, and determination of solvent concentration. Calculations for net solvent recovery based on an 80% washings recovery, for heat requirements and vaporization, and for steam and cooling requirements determine equipment sizing and selection. A cost analysis shows a total incremental cost of $0.367/gal solvent. By alerting the rectification column of the distillation unit, its application for solvent recovery can be extended to such industries as adhesive and paint manufacture, photographic chemicals, vegetable oils, and animal by-product processing. (Kutcher-FIRL)

Descriptors: *Waste disposal ; *Chemical wastes ; *Recycling ; *Solvents; Capital costs ; Operating costs ; Chemical industry ; Treatment facilities ; Waste water treatment ; Cost analysis ; Industrial wastes

Section Heading Codes: 5D (Water Quality Management and Protection--Waste Treatment Processes); 3E (Water Supply Augmentation and Conservation--Conservation in Industry)

11/5/30 (Item 20 from file: 117)
DIALOG(R)File 117:Water Resour.Abs.
(c) format only 1994 Dialog Info.Svcs. All rts. reserv.

098735 W76-08171
WATER-RECYCLE WASHING OF REFINED SOYBEAN OIL: PLANT SCALE EVALUATION
BEAL, R. E.; BLACK, L. T.; GRIFFIN, E. L.; MENG, J. C.; FARMER, G. S.
ANDERSON CLAYTON FOODS, INC., SHERMAN, TEX.
JOURNAL OF AMERICAN OIL CHEMISTS SOCIETY, VOL. 50, P. 260-263, 1973. 1 FIG, 6 TAB, 9 REF.,
Journal Announcement: SWRA0916
A SERIES OF 24 HOUR TESTS WAS MADE IN A COMMERCIAL REFINERY UNDER EIGHT DIFFERENT OPERATING CONDITIONS TO SELECT OPTIMUM CONDITIONS FOR A SUBSEQUENT LONGER TEST OF THE ANTIPOLLUTION RECYCLE-WASHING PROCESS WHEREIN WASH WATER IS RECYCLED INSTEAD OF BEING DISCARDED. ALKALI-REFINED OIL WAS CONTINUOUSLY WASHED AT A RATE OF 15,000 LB/HR TO REMOVE SODIUM. RECYCLED WASH WATER WAS THEN TREATED WITH A CATION EXCHANGE RESIN TO REMOVE SODIUM. TWO WASH WATER PH LEVELS, TWO OIL-WATER RATIOS AND THE ADDITION OF A SEQUESTERING AGENT ETHYLENE DIAMINE TETRAACETIC ACID (EDTA) TO WASH WATER, WERE FACTORS INVESTIGATED. FOR THE LONGER TEST A WATER PH OF 3.0 AND AN OIL-WATER RATIO OF 4:1 WERE USED, AND EDTA WAS NOT ADDED. OPERATING AND ANALYTICAL DATA, EQUIPMENT SPECIFICATIONS AND COST DATA WERE ACQUIRED. THE WASHED OIL HAD A SATISFACTORILY LOW CONTENT OF SODIUM, IRON AND COPPER. AFTER IT WAS BLEACHED THE OIL HYDROGENATED AT A RATE COMPARABLE TO THAT OF A CONVENTIONALLY WASHED OIL. THE BLEACHED, DEODORIZED OIL HAD SATISFACTORY FLAVOR AND FLAVOR STABILITY. THE EXCHANGE RESIN REQUIRED PERIODIC CAUSTIC CLEANING TO MAINTAIN CAPACITY. THE NEW RECYCLE PROCESS PROVIDES AN ECONOMIC SOLUTION TO THE WASH WATER DISPOSAL PROBLEM. (EPA-CORVALLIS)
Descriptors: *FOOD PROCESSING INDUSTRY ; *SOYBEANS ; *WASTE WATER TREATMENT ; *WATER REUSE; RECYCLING
Section Heading Codes: 3E (Water Supply Augmentation and Conservation--Conservation in Industry); 5D (Water Quality Management and Protection--Waste Treatment Processes)

11/5/31 (Item 21 from file: 117)
DIALOG(R)File 117:Water Resour.Abs.
(c) format only 1994 Dialog Info.Svcs. All rts. reserv.

098405 W76-07707
METHOD OF ELECTROLYTIC TREATMENT OF WASTE WATER
ISHII, M.; ICHIKI, M.
MITSUI MINING AND SMELTING CO. LTD., TOKYO(JAPAN). (ASSIGNEE).
UNITED STATES PATENT 3,783,114. ISSUED JANUARY 1, 1974. OFFICIAL GAZETTE OF THE UNITED STATES PATENT OFFICE, VOL. 918, NO. 1, P 415, JANUARY, 1974. 1 FIG.,
Journal Announcement: SWRA0915
A PATENT HAS BEEN GRANTED FOR A METHOD OF ELECTROLYTIC TREATMENT OF INDUSTRIAL WASTE WATER. THE ELECTROLYSIS IS CONDUCTED BY INTRODUCING THE INDUSTRIAL WASTE WATER AS THE ELECTROLYTE INTO AN ELECTROLYTIC CELL EQUIPPED WITH VERTICALLY SUSPENDED ANODES AND HORIZONTAL CATHODES POSITIONED NEAR THE BOTTOM OF THE CELL. THE SCUM ARISING FROM THE ELECTROLYSIS OF THE HEAVY METAL IONS, FATS AND OILS INCLUDING ANIMAL, VEGETABLE AND MINERAL OILS, VARIOUS FINE, SOLID FLOATING MATTERS IS REMOVED FROM THE UPPER PART OF THE ELECTROLYTIC CELL. THE ELECTROLYTICALLY PURIFIED WASTE WATER IS REMOVED FROM THE LOWER PART OF THE ELECTROLYTIC CELL. (SANDOSKI-FIRL)
Descriptors: *WASTE WATER TREATMENT ; *INDUSTRIAL WASTES ; *PATENTS ; *ELECTROLYSIS; HEAVY METALS ; ELECTROLYTES ; ELECTRODES ; OIL WASTES ; ANODES ; CATHODES
Section Heading Codes: 5D (Water Quality Management and Protection--Waste Treatment Processes)

257

11/5/32 (Item 22 from file: 117)
DIALOG(R)File 117:Water Resour.Abs.
(c) format only 1994 Dialog Info.Svcs. All rts. reserv.

095532 W76-05300
METHOD OF ELECTROLYTIC TREATMENT OF WASTE WATER
ICHIKI, M.; MASAHITO, I.
CANADIAN PATENT 958,373. ISSUED NOVEMBER 26, 1974. PATENT OFFICE RECORD, VOL. 102, NO. 48, P 47, NOVEMBER, 1974.,
Journal Announcement: SWRA0911
A NEW METHOD FOR THE ELECTROLYTIC TREATMENT OF INDUSTRIAL WASTE WATER HAS BEEN PATENTED. THE ELECTROLYSIS IS PERFORMED BY INTRODUCING THE INDUSTRIAL WASTE WATER AS THE ELECTROLYTE INTO AN ELECTROLYTIC CELL EQUIPPED WITH VERTICALLY SUSPENDED ANODES AND CATHODES POSITIONED HORIZONTALLY NEAR THE BOTTOM OF THE CELL. SCUM FORMS FROM THE ELECTROLYSIS OF HEAVY METAL IONS, FATS AND OIL INCLUDING ANIMAL, VEGETABLE AND MINERAL OILS AND/OR VARIOUS FINE, SOLID FLOATING MATERIAL. THIS SCUM IS REMOVED FROM THE UPPER PART OF THE ELECTROLYTIC CELL; THE ELECTROLYTICALLY PURIFIED WASTE WATER IS REMOVED FROM THE LOWER PART OF THE ELECTROLYTIC CELL. (ORR-FIRL)
Descriptors: *PATENTS ; *ELECTROLYSIS ; *INDUSTRIAL WASTES ; *WASTE WATER TREATMENT; SCUM ; CATHODES ; ANODES ; SEPARATION TECHNIQUES
Section Heading Codes: 5D (Water Quality Management and Protection--Waste Treatment Processes)

11/5/33 (Item 23 from file: 117)
DIALOG(R)File 117:Water Resour.Abs.
(c) format only 1994 Dialog Info.Svcs. All rts. reserv.

094453 W76-03998
CHROMATOGRAPHIC DETERMINATION OF CONSTITUENTS IN ETHERAL EXTRACTS FROM INDUSTRIAL WASTE WATERS (DEL CONSTITUENTI L'ESTRATTO ETEREO DI ACQUE INDUSTRIALI)
GORETTI, G.; MARSELLA, I.; PETRONIO, B. M.
LA RIVISTA ITALIANA DELLE SOSTANZE GRASSE, VOL 51, NO 2, P 66-69, FEBRUARY, 1974. 4 FIG, 1 TAB, 11 REF.,
Journal Announcement: SWRA0908
ANIMAL, VEGETABLE, AND MINERAL OIL CONSTITUENTS OF INDUSTRIAL WASTE WATERS CAN BE QUANTITATIVELY DETERMINED. THIS IS ACCOMPLISHED BY A TYPE OF THIN-LAYER CHROMATOGRAPHY USING SILICA GEL PLATES. A 1:3 MIXTURE OF CHLOROFORM AND BENZENE WAS EMPLOYED AS ELUTION. THE PURPOSE WAS TO ASSAY COMPONENTS OF ETHEREAL EXTRACTS IN INDUSTRIAL WASTE WATERS. (MURPHY-FIRL)
Descriptors: *WASTE WATER TREATMENT ; *INDUSTRIAL WASTES ; *POLLUTANT IDENTIFICATION; ANALYTICAL TECHNIQUES ; CHROMATOGRAPHY ; CHEMICAL ANALYSIS ; OIL
Section Heading Codes: 5A (Water Quality Management and Protection--Identification of Pollutants); 5D (Water Quality Management and Protection--Waste Treatment Processes)

11/5/34 (Item 24 from file: 117)
DIALOG(R)File 117:Water Resour.Abs.
(c) format only 1994 Dialog Info.Svcs. All rts. reserv.

087637 W75-09340
EXPERIMENTAL INVESTIGATION OF THE WET OXIDATION DESTRUCTION OF SHIPBOARD WASTE STREAMS
SCHATZBERG, P.; JACKSON, D. F.; KELLY, C. M.
NAVAL SHIP RESEARCH AND DEVELOPMENT CENTER, ANNAPOLIS, MD.
AVAILABLE FROM THE NATIONAL TECHNICAL INFORMATION SERVICE, SPRINGFIELD, VA 22161 AS AD-787 061, $4.25 IN PAPER COPY, $2.25 IN MICROFICHE. REPORT 4416 (AD 787061), OCT 1974. 38 P, 24 FIG, 10 TAB, 12 REF, 4 APPEND.,
Journal Announcement: SWRA0818

BEST AVAILABLE COPY

INCREASINGLY STRINGENT WATER QUALITY REGULATIONS ANTICIPATE THE NEED FOR TREATING ALL SHIPBOARD WASTE STREAMS CONTAINING COMBUSTIBLE MATTER. ULTIMATE DISPOSAL/DESTRUCTION MUST INCLUDE LAUNDRY, SHOWER, GALLEY, BILGE, AND SANITARY (HUMAN) WASTES AS WELL AS GARBAGE AND REFUSE. WET AIR OXIDATION OR PRESSURIZED AQUEOUS COMBUSTION CONDUCTED AT 475-600 F AT OPERATING PRESSURES FROM 600 TO 1850 LB/SQ INCH GAGE WAS INVESTIGATED AS ONE MEANS FOR THE ULTIMATE DESTRUCTION OF ORGANIC WASTES. THIS PROCESS WAS INVESTIGATED BY CONDUCTING EXPERIMENTS IN A 1-GALLON PRESSURE VESSEL WITH A VARIETY OF WASTES (SANITARY, FOOD, OIL, MUNICIPAL SLUDGE, GLUCOSE, AND CELLULOSE) UNDER DIFFERENT CONDITIONS. RESULTS SHOWED THAT THE WET OXIDATION PROCESS OBEYS FIRST-ORDER KINETICS WITH AN INITIAL FAST REDUCTION FOLLOWED BY A SLOWER SECOND REACTION. CATALYSTS HAVE THEIR MAIN INFLUENCE ON THE FAST REACTION, INCREASING ITS RATE BY A FACTOR OF THREE. APPLYING WET OXIDATION TO DESTROY WATERBORNE ORGANIC WASTES CONSISTS OF TAKING ADVANTAGE OF THE FAST REACTION. REDUCTION IN ORGANIC WASTE CONTENT, EXPRESSED AS COD, RANGED FROM 60 TO 85%, DEPENDING ON THE WASTE MATERIAL, AFTER 15 MIN OF REACTION TIME. THE USE OF CATALYSTS CAN INCREASE THIS FIGURE TO 95%. ADDITIONAL REMOVAL OF ORGANIC MATTER CAN BE ACHIEVED BY FURTHER PROCESSING THE WET OXIDATION EFFLUENT THROUGH A REVERSE OSMOSIS MEMBRANE. THE WIDE RANGE OF MATERIALS CAPABLE OF BEING DESTROYED BY WET AIR OXIDATION, THE INNOCUOUS STERILE NATURE OF THE EFFLUENT, AND ITS POTENTIAL TO BE RECYCLED WITH LITTLE OR NO POST-TREATMENT MAKE THIS PROCESS A CANDIDATE FOR THE ULTIMATE DESTRUCTION OF SHIPBOARD WASTES. (WITT-IPC)

Descriptors: *WASTE WATER TREATMENT ; *SEWAGE TREATMENT; BURNING ; CHEMICAL REACTIONS ; ORGANIC WASTES ; KINETICS ; LABORATORY TESTS ; CATALYSTS ; CHEMICAL OXYGEN DEMAND ; REVERSE OSMOSIS ; WATER POLLUTION SOURCES ; WATER POLLUTION TREATMENT ; WASTES ; SHIPS ; OXIDATION ; DISINFECTION ; WATER POLLUTION CONTROL

Section Heading Codes: 5D (Water Quality Management and Protection--Waste Treatment Processes)

11/5/35 (Item 25 from file: 117)
DIALOG(R)File 117:Water Resour.Abs.
(c) format only 1994 Dialog Info.Svcs. All rts. reserv.

073485 W74-08468

DISPOSAL OF INDUSTRIAL TRADE EFFLUENTS FROM THE FOOD INDUSTRIES

HUI BOON, TAN
SINGAPORE INST. OF STANDARDS AND INDUSTRIAL RESEARCH.

IN: WATER RESOURCES, ENVIRONMENT AND NATIONAL DEVELOPMENT--VOLUME II: SELECTED PAPERS; PROCEEDINGS OF REGIONAL WORKSHOP BY SCIENCE COUNCIL OF SINGAPORE AND NATIONAL ACADEMY OF SCIENCES OF THE USA, SINGAPORE, MARCH 13-17, 1972: SCIENCE COUNCIL OF SINGAPORE, P 181-188, 1972. 2 TAB, 15 REF.,
Journal Announcement: SWRA0716

THE PROBLEMS OF TRADE EFFLUENT DISPOSAL FACED BY THE FOOD INDUSTRIES IN SINGAPORE ARE DISCUSSED. THE FOOD INDUSTRY INCLUDES MANUFACTURE OF MEAT, VEGETABLE, DAIRY, OIL AND FERMENTED PRODUCTS. PARTLY BECAUSE OF THE CHARACTER OF THE TRADE EFFLUENTS, IT MAY BE POSSIBLE TO CHANNEL SUCH WASTES DIRECTLY INTO SEWERS SUBJECT TO A LEVY IMPOSED BY THE RELEVANT AUTHORITY. (SEE ALSO W74-08454) (KNAPP-USGS)

Descriptors: *WASTE WATER TREATMENT ; *SEWAGE TREATMENT ; *FOOD PROCESSING INDUSTRY; INDUSTRIAL WASTES ; ORGANIC MATTER ; HEAVY METALS

Section Heading Codes: 5D (Water Quality Management and Protection--Waste Treatment Processes); 5G (Water Quality Management and Protection--Water Quality Control); 3E (Water Supply Augmentation and Conservation--Conservation in Industry)

259

11/5/36 (Item 26 from file: 117)
DIALOG(R)File 117:Water Resour.Abs.
(c) format only 1994 Dialog Info.Svcs. All rts. reserv.
070717 W74-05980
RECYCLING URBAN EFFLUENTS ON LAND USING ANNUAL CROPS
DAY, A. D.
ARIZONA UNIV., TUCSON. DEPT. OF AGRONOMY AND PLANT GENETICS.
IN: RECYCLING MUNICIPAL SLUDGES AND EFFLUENTS ON LAND; PROC OF JOINT CONFERENCE, JULY 9-13, 1973, CHAMPAIGN, ILL: NATIONAL ASSOCIATION OF STATE UNIVERSITIES AND LAND-GRANT COLLEGES, WASHINGTON, D C, P 155-160, 1973. 19 REF.,
Journal Announcement: SWRA0712
BECAUSE MUNICIPAL WASTEWATER CONTAINS MORE FERTILIZER ELEMENTS (NITROGEN, PHOSPHORUS, AND POTASSIUM) THAN DO MOST OTHER FORMS OF IRRIGATION WATER, IT OFFERS AN AGRICULTURAL POTENTIAL THAT SHOULD BE EXPLOITED. HIGH YIELDS OF FOOD, FEED, FORAGE, OIL, AND FIBER PLANT PRODUCTS MAY BE OBTAINED FROM CROP PLANTS UTILIZING MUNICIPAL WASTEWATER AS A SOURCE OF IRRIGATION WATER AND PLANT NUTRIENTS. SOIL IRRIGATED WITH WASTEWATER HAD A LOWER INFILTRATION RATE, HIGHER MODULUS OF RUPTURE, AND MORE SOLUBLE SALTS, NITRATES, AND PHOSPHATES THAN DID SOIL IRRIGATED WITH WELL WATER AND FERTILIZED WITH SUGGESTED AMOUNTS OF NITROGEN, PHOSPHORUS, AND POTASSIUM. IRRIGATION WITH WASTEWATER (SEWAGE EFFLUENT) FOR 14 YEARS DID NOT DECREASE FIELD CROP YIELDS OR RESULT IN ANY ADVERSE EFFECTS ON SOIL THAT COULD NOT BE CORRECTED WITH MINOR CHANGES IN FIELD CROP CULTURE. (SEE ALSO W74-05963) (KNAPP-USGS)
Descriptors: *IRRIGATION WATER ; *WASTE WATER DISPOSAL ; *RECYCLING ; *SEWAGE DISPOSAL ; *WATER REUSE; NUTRIENTS ; FERTILIZERS ; CROPS ; CROPS RESPONSE ; SOIL-WATER-PLANT RELATIONSHIPS
Section Heading Codes: 5D (Water Quality Management and Protection--Waste Treatment Processes); 3F (Water Supply Augmentation and Conservation--Conservation in Agriculture); 5E (Water Quality Management and Protection--Ultimate Disposal of Wastes)

11/5/37 (Item 27 from file: 117)
DIALOG(R)File 117:Water Resour.Abs.
(c) format only 1994 Dialog Info.Svcs. All rts. reserv.

062124 W73-12668
TREATMENT OF SOYBEAN OIL SOAPSTOCK TO REDUCE POLLUTION
BEAL, R. E.; SOHNS, V. E.; MENGE, H.
AGRICULTURAL RESEARCH SERVICE, PEORIA, ILL. NORTHERN REGIONAL RESEARCH LAB.
J AM OIL CHEM SOC. VOL 49, NO 8, P 447-450. 1972.,
Journal Announcement: SWRA0620
OFTEN SOAPSTOCK IS ACIDULATED TO CONVERT THIS BYPRODUCT OF VEGETABLE OIL REFINING TO A SALABLE COMMODITY. THE ACIDIC WASTE WATER FROM THIS TREATMENT CONSTITUTED A SIGNIFICANT PART OF THE ENVIRONMENTAL POLLUTION FROM REFINERIES. A PROCESS OF NEUTRALIZING AND DRYING WAS INVESTIGATED AS A NONPOLLUTING METHOD FOR UPGRADING SOYBEAN OIL SOAPSTOCK. NEUTRALIZATION WITH SULFURIC ACID WAS CONDUCTED IN A RIBBON BLENDER. THE NEUTRAL SOAPSTOCK WAS DIRED TO 4% MOISTURE, EITHER BATCHWISE IN A NATURAL CIRCULATION EVAPORATOR OR CONTINUOUSLY IN A SCRAPED FILM EVAPORATOR. THE PRODUCT IS LIQUID WHILE HOT BUT SOLIDIFIES TO A WAXY SOLID WHEN COOLED TO ROOM TEMPERATURE. WHEN ADDED TO A STANDARD BROILER RATION, THE FEED EFFICIENCY AND RATE OF GAIN OF CHICKENS EQUALED THAT OBTAINED WITH A COMMERCIAL FEED FAT ADDED AT THE SAME LEVEL. THE SOAPSTOCK PRODUCTS FEED, WHICH CONTAINED 200-300 PPM XANTHOPHYLL, GAVE SIGNIFICANTLY BETTER SHANK PIGMENTATION THAN THE COMMERCIAL FAT, WHICH CONTAINED 3 PPM.--COPYRIGHT 1973, BIOLOGICAL ABSTRACTS, INC.
Section Heading Codes: 5D (Water Quality Management and Protection--Waste Treatment Processes)

BEST AVAILABLE COPY

11/5/38 (Item 28 from file: 117)
DIALOG(R)File 117:Water Resour.Abs.
(c) format only 1994 Dialog Info.Svcs. All rts. reserv.

059879 W73-11575
PETROLEUM HYDROCARBONS AND FATTY ACIDS IN WASTEWATER EFFLUENTS
FARRINGTON, J. W.; QUINN, J. G.
WOODS HOLE OCEANOGRAPHIC INSTITUTION, MASS.
JOURNAL WATER POLLUTION CONTROL FEDERATION, VOL 45, NO 4, P 704-712, APRIL 1973. 2 FIG, 2 TAB, 28 REF.,
Journal Announcement: SWRA0618
SAMPLES OF THE EFFLUENT FROM THREE SECONDARY TREATMENT PLANTS WERE SURVEYED TO DETERMINE FATTY ACID AND HYDROCARBON DISTRIBUTIONS AND CONCENTRATIONS. THE SAMPLES WERE OBTAINED IN GLASS CONTAINERS WITH ALUMINUM-LINED CAPS. LIPID EXTRACTS WERE OBTAINED BY EITHER (1) EXTRACTING THE ACIDIFIED EFFLUENT WITH CHLOROFORM, SAPONIFYING THE LIPID RESIDUES WITH 0.5 N KOH IN (1:1) BENZENE:METHANOL, ACIDIFYING THE SAPONIFIED EXTRACT, AND PARTITIONING THE LIPIDS INTO PETROLEUM ETHER; OR (2) REFLUXING SUBSAMPLES WITH 0.5 N KOH IN (1:1) BENZENE:METHANOL, ACIDIFYING THE EXTRACT AND PARTITIONING THE LIPIDS INTO PETROLEUM ETHER. FATTY ACID ANALYSIS WAS CARRIED OUT USING FLAME IONIZATION GAS CHROMATOGRAPHY. HYDROCARBONS WERE ALSO ANALYZED BY GAS CHROMATOGRAPHY AFTER ISOLATION FROM THE EFFLUENT LIPID EXTRACTS BY COLUMN AND THIN-LAYER CHROMATOGRAPHY. THE ANALYSES CONFIRM THAT THE PREDOMINANT FATTY ACIDS RATIOS IN EFFLUENTS ARE 16:0, 18:0, 18:1. THE RELATIVE ABUNDANCE OF THESE ACIDS SUGGESTS ANIMAL FATS AND VEGETABLE OILS AS THEIR SOURCES. CONCENTRATIONS OF FATTY ACIDS RANGED FROM 0.73 TO 43.05 MG/L. PETROLEUM HYDROCARBONS ARE DISCHARGED BY TWO OF THE TREATMENT PLANTS STUDIED. HYDROCARBON CONCENTRATIONS RANGED FROM NONE DETECTED FOR THE EFFLUENT OF ONE TREATMENT PLANT TO 16.2 MG/L FOR THE EFFLUENT OF ANOTHER. THESE RESULTS CONFIRM SUGGESTIONS THAT SIGNIFICANT AMOUNTS OF PETROLEUM HYDROCARBONS ARE DISCHARGED IN EFFLUENTS. (HOLOMAN-BATTELLE)
Descriptors: *WASTE WATER(POLLUTION) ; *SEWAGE EFFLUENTS ; *POLLUTANT IDENTIFICATION ; *SEWAGE TREATMENT ; *OIL; SEPARATION TECHNIQUES ; TREATMENT FACILITIES ; ORGANIC COMPOUNDS ; SOLVENT EXTRACTIONS ; LIPIDS ; WATER SAMPLING ; GAS CHROMATOGRAPHY ; ORGANIC ACIDS
Section Heading Codes: 5B (Water Quality Management and Protection--Sources of Pollution); 5A (Water Quality Management and Protection--Identification of Pollutants); 5D (Water Quality Management and Protection--Waste Treatment Processes)

11/5/39 (Item 29 from file: 117)
DIALOG(R)File 117:Water Resour.Abs.
(c) format only 1994 Dialog Info.Svcs. All rts. reserv.

049903 W73-00081
THE IMPACT OF OILY MATERIAL ON ACTIVATED SLUDGE SYSTEMS
HYDROSCIENCE, INC., WESTWOOD, N.J.
COPY AVAILABLE FROM GPO SUP DOC AS SN5501-0088, $1.25; MICROFICHE FROM NTIS AS PB-212 422, $0.95. ENVIRONMENTAL PROTECTION AGENCY, WATER POLLUTION CONTROL RESEARCH SERIES, MARCH 1971, 110 P, 29 FIG, 10 TAB, 38 REF. EPA PROGRAM 12050 DSH 03/71.,
Journal Announcement: SWRA0601
THE PREFORMANCE OF SMALL SCALE CONTINUOUS ACTIVATED SLUDGE SYSTEMS WAS OBSERVED AFTER BEING EXPOSED TO A VARIETY OF OILY COMPOUNDS SUCH AS CRANKCASE OIL, CRUDE OIL AND VEGETABLE OIL, AT SEVERAL LOADING LEVELS. BATCH STUDIES WERE CONDUCTED TO DETERMINE BIODEGRADABILITY AND THE EFFECT OF EMULSIFICATION AND TEMPERATURE ON THE RATE OF BIOLOGICAL REACTION. OILS ARE ABSORBED ON THE FLOC AND SLOWLY DEGRADE WHEN THEY ARE INTRODUCED INTO AN ACTIVATED SLUDGE SYSTEM. THE OIL ACCUMULATES ON THE SLUDGE CAUSING A LOSS OF DENSITY AND ACCEPTABLE SETTLING CHARACTERISTICS IF THE LOADING RATE IS HIGHER THAN THE DEGRADATION WASTAGE. THE ABILITY OF THE MICROBIAL SYSTEM TO REMOVE OTHER SUBSTRATES IS NOT INHIBITED ALTHOUGH THE BIOLOGICAL SYSTEM FAILS DUE TO THE LOSS OF SLUDGE. 0.10 POUNDS PER DAY PER POUND OF SLUDGE

UNDER AERATION SHOULD BE THE MAXIMUM CONTINUOUS FEED LEVEL OF OILS TO ACTIVATED SLUDGE. SHOCK LOADS SHOULD NOT EXCEED 5% OF THE WEIGHT OF THE SLUDGE UNDER AERATION. (SMITH-TEXAS)

Descriptors: *OIL WASTES ; *ACTIVATED SLUDGE ; *SEWAGE TREATMENT ; *WASTE WATER DISPOSAL; BIOLOGICAL TREATMENT ; OIL ; BIODEGRADATION ; ABSORPTION ; SLUDGE TREATMENT

Section Heading Codes: 5D (Water Quality Management and Protection--Waste Treatment Processes)

11/5/40 (Item 30 from file: 117)
DIALOG(R)File 117:Water Resour.Abs.
(c) format only 1994 Dialog Info.Svcs. All rts. reserv.

045456 W72-10927

EXPERIENCES IN POLYMER APPLICATIONS TO SEVERAL SOLIDS-LIQUIDS SEPARATION PROCESSES

MOGELNICKI, S. J.

DOW CHEMICAL CO., MIDLAND, MICH.

IN: PROCEEDINGS, TENTH SANITARY ENGINEERING CONFERENCE, WASTE DISPOSAL FROM WATER AND WASTEWATER TREATMENT PROCESSES, UNIVERSITY OF ILLINOIS, URBANA, FEB 6-7, 1968, P 47-62. 9 FIG, 24 TAB.,

Journal Announcement: SWRA0518

THE EARLY UTILITY OF POLYMERS IN THE MINING, METAL, AND PAPER INDUSTRIES IS CITED. DATA ARE TABULATED ON THE EFFECTIVENESS OF SYNTHETIC, ORGANIC, HIGH MOLECULAR WEIGHT, WATER SOLUBLE POLYMERS TO SEPARATE SOLIDS IN INDUSTRY. THE POLYMERS DEPEND ON ADSORPTION, CHARGE NEUTRALIZATION, AND INTER-PARTICLE BRIDGING TO AGGLOMERATE SMALL COLLOIDAL SUSPENSIONS INTO LARGE COLONIES. TYPICAL CATIONIC POLYMINE, ANIONIC, AND NONIONIC POLYMER FORMULAE ARE PRESENTED POLYMERS FUNCTION AS PRIMARY FLOCCULANTS, FLOCCULANT AIDS, FILTER AIDS, AND SLUDGE CONDITIONING AGENTS. DATA ARE TABULATED FOR POLYMER APPLICATION IN SEDIMENTATION, FLOTATION, FILTRATION, AND CENTRIFUGATION PROCESSES. WASTEWATER CLARIFICATION WITH POLYMER ADDITION IS DESCRIBED FOR AN ALUMINUM INDUSTRY EFFLUENT, STEEL MILL FLUE DUST, ELECTROPLATING STREAMS, TANNERY WASTE, STEEL MILL SCALE, AND RAW SEWAGE FLOCCULATION AT AN ACTIVATED SLUDGE AND TRICKLING FILTER PLANT. FLOTATION DATA ARE PRESENTED FOR BREWERY, VEGETABLE OIL PROCESSING, MEAT PACKING, WASTE ACTIVATED SLUDGE AND PETROLEUM REFINERY WASTES. DATA ARE PRESENTED FOR SAND BED DRYING AND VACUUM FILTRATION OF TEXTILE INDUSTRY, ELUTRIATED DIGESTED PRIMARY, AND PRIMARY-SECONDARY ELUTRIATED DIGESTED WASTES. CENTRIFUGATION STUDIES WERE CONDUCTED ON CHEMICAL AND SEWAGE SLUDGES. POLYMER ADVANTAGES INCLUDE REDUCED HANDLING AND CHEMICAL STORAGE, EASILY CONTROLLED DOSE LEVELS, INCREASED SUSPENDED SOLIDS CAPTURE, HIGHER HYDRAULIC CAPACITY, AND REDUCED COSTS. (NARDOZZI-AWWARF)

Descriptors: *POLYMERS ; *DEWATERING ; *WASTE WATER TREATMENT ; *FLOCCULATION ; *INDUSTRIAL WASTES ; *SLUDGE TREATMENT; INDUSTRIAL WASTES ; SEDIMENTATION ; CENTRIFUGATION ; FLOTATION ; FILTRATION ; SOLID WASTES ; SEPARATION TECHNIQUES

Section Heading Codes: 5D (Water Quality Management and Protection--Waste Treatment Processes); 5F (Water Quality Management and Protection--Water Treatment and Quality Alteration)

11/5/41 (Item 31 from file: 117)
DIALOG(R)File 117:Water Resour.Abs.
(c) format only 1994 Dialog Info.Svcs. All rts. reserv.

036551 W72-02208

PROBLEMS OF INDUSTRIAL RESIDUAL WATERS IN THE HOOGHLY ESTUARY ZONE (INDIA), CONCRETELY THE ONES FROM PAPER PULP AND HYDROGENATED VEGETABLE OIL INDUSTRIES (PROBLEMES D'EAUX RESIDUAIRES INDUSTRIELLES DANS LA ZONE DU HOOGHLY ESTUARY (INDE), NOTAMENT DES FABRIQUES DE PATE A PAPIER ET D'HUILE VEGETALE HYDROGENEE)

BASU, A. K.

BEST AVAILABLE COPY

INSTUTUT CENTRAL DE RECHERCHES SUR LES PECHES INTERIEURES, BARRACKPORE (INDIA).
LA TRIBUNE DE CEBEDEAU, VOL 22, NO 309-310, P 452-456, AUGUST-SEPTEMBER 1969. 6 TAB, 3 FIG, 6 REF.,
Journal Announcement: SWRA0504
THE INDUSTRIAL CONCENTRATION IS VERY DENSE BETWEEN TRIBENI AND BIRLAPUR ON BOTH SIDES OF THE HOOGHLY ESTUARY. JUTE, FABRIC, TANNING, SHELLAC, CHEMICAL PRODUCTS, PAINTS AND CHLORINE INDUSTRIES ARE ARRANGED ALONG 85 KILOMETERS ON BOTH BANKS. WASTE WATERS ARE DIRECTLY OR INDIRECTLY DISPOSED INTO THE ESTUARY, MOST OF THE TIME WITHOUT HAVING ANY KIND OF PRE-TREATMENT; THIS CREATED A SERIOUS PROBLEM TO THE REGIONAL SERVICES OF PUBLIC HEALTH. THE ARTICLE DEALS WITH THE POLLUTION WHICH OCCURS DUE TO THE ACTIVITIES OF PAPER PULP AND HYDROGENATED VEGETABLE OIL (MARGARINE) INDUSTRIES. THE TREATMENT DESCRIBED IS BASED ON CHEMICAL PRECIPITATION, ANAEROBIC DIGESTION AND SEDIMENTATION PROCESSES. (MINGUEZ-ARIZONA)
Descriptors: *WATER POLLUTION SOURCES ; *PULP AND PAPER INDUSTRIES ; *PULP WASTES ; *ANAEROBIC DIGESTION ; *SEDIMENTATION ; *SETTLING BASINS ; *CHEMICAL PRECIPITATION ; *COAGULATION; PLASTICS
Section Heading Codes: 5B (Water Quality Management and Protection--Sources of Pollution); 5D (Water Quality Management and Protection--Waste Treatment Processes); 2L (Water Cycle--Estuaries)

11/5/42 (Item 32 from file: 117)
DIALOG(R)File 117:Water Resour.Abs.
(c) format only 1994 Dialog Info.Svcs. All rts. reserv.

025244 W71-05389
OPTIMIZING LIPID BIOSTABILIZATION
GARNER, W.
MIDWEST RESEARCH INST., KANSAS CITY, MO.
COPY AVAILABLE FROM GPO SUP DOC AS I67.13/4:ORD-17050FIMDS170, $0.60; MICROFICHE FROM NTIS AS PB-197 893, $0.95. FEDERAL WATER QUALITY ADMINISTRATION, WATER POLLUTION CONTROL SERIES, ORD-17050 FIM 05/70, MAY 1970. 57 P, 14 TAB, 11 FIG, 23 FIG, 2 APPEND. FWQA PROGRAM 17050 FIM.,
Journal Announcement: SWRA0411
LABORATORY SCALE ANAEROBIC DIGESTION STUDIES WERE CARRIED OUT TO DETERMINE THE EFFECT OF HIGH-SHEAR MIXING ON THE DEGRADATION OF LIPIDS. THE STUDIES SHOWED THAT THE INTENSITY OF MIXING MUST BE CAREFULLY TAILORED TO THE RATE AND TYPE OF FEED IF BENEFITS ARE TO BE REALIZED. DOG FOOD, COTTONSEED OIL, AND MOTOR OIL WERE FED TO THE DIGESTERS DAILY AS SLUG LOADS. WHEN PROPERLY OPERATED, THE 15 REPLICATE DIGESTERS GAVE REPRODUCIBLE RESULTS WITH GOOD PRECISION. HIGH-SHEAR MIXING HAS LITTLE EFFECT ON DEGRADATION OF DOG FOOD AND WAS DELETERIOUS TO LIME-BUFFERED SOLUTIONS HEAVILY LOADED WITH COTTON SEED OIL. WHEN SODA ASH WAS USED AS A BUFFERING AGENT, HEAVY LOADS OF OIL CAUSED THE DIGESTER TO 'GO SOUR' REGARDLESS OF THE MIXING SYSTEM. UNDER SOME CONDITIONS HOMOGENIZATION LED TO SERIOUS FOAMING IN THE DIGESTORS. KINETIC DATA AND CHEMICAL ANALYSIS OF DRAWDOWN SAMPLES CONFIRMED THE HYPOTHESIS THAT HOMOGENIZATION OR SODA ASH BUFFERING CAN ACCELERATE THE HYDROLYSIS OF A HEAVY LOAD OFFAT TO A POINT WHERE THE SAPONIFICATION PRODUCTS OVER LOAD THE METHANE FERMENTATION. MOTOR OIL WAS NOT READILY DIGESTED BUT DID NOT APPEAR TO INFLUENCE THE DIGESTION OF COTTONSEED OIL OR DOG FOOD. OTHER OBSERVATIONS WERE: (1) MORE RAPID GASIFICATION OCCURS AS THE FEED RATE INCREASES; (2) LIME AND SODA ASH CANNOT BE USED INTERCHANGEABLY AS BUFFERS; AND (3) FEED COD CANNOT BE USED TO PREDICT METHANE YIELD. (ELLIS-TEXAS)
Descriptors: *OPTIMIZATION ; *LIPIDS ; *ANAEROBIC CONDITIONS ; *WASTE WATER TREATMENT; DIGESTION ; ANAEROBIC DIGESTION ; DEGRADATION ; LIME ; CHEMICAL OXYGEN DEMAND
Section Heading Codes: 5D (Water Quality Management and Protection--Waste Treatment Processes)

11/5/43 (Item 33 from file: 117)
DIALOG(R)File 117:Water Resour.Abs.
(c) format only 1994 Dialog Info.Svcs. All rts. reserv.

022686 W71-02714
THE VALUE OF HYDROLYZED AND DRIED POULTRY WASTE AS A FEED FOR RUMINANT ANIMALS
LONG, T. A.; BRATZLER, J. W., FREAR, D. E. H.
PENNSYLVANIA STATE UNIV., UNIVERSITY PARK.
IN: ANIMAL WASTE MANAGEMENT, PROCEEDINGS CORNELL UNIVERSITY CONFERENCE ON AGRICULTURAL WASTE MANAGEMENT, 1969, P 98-104. 12 TAB.,
Journal Announcement: SWRA0405
INFORMATION WAS PRESENTED CONCERNING THE VALUE OF HEAT TREATED POULTRY WASTE AS A SOURCE OF NUTRIENT FOR RUMINANT ANIMALS. IN A METABOLISM TRIAL, WHETHERS WERE FED A SEMI-PURIFIED RATION IN WHICH THE NITROGEN WAS SUPPLIED BY HYDROLIZED POULTRY WASTE, COOKED POULTRY WASTE, OR SOYBEAN OIL MEAL. THE DIGESTION COEFFICIENTS FOR CRUDE PROTEIN DIFFERED SIGNIFICANTLY (P .05) BETWEEN ALL RATIONS. NITROGEN EXCRETED IN THE FECES WAS SIGNIFICANTLY LOWER FOR THE SOYBEAN OIL MEAL RATION THAN FOR THE POULTRY WASTE RATION. NO OTHER SIGNIFICANT DIFFERENCES WERE OBSERVED. IT WAS FOUND IN A FATTENING TRIAL WITH STEERS THAT RATE OF GAIN, FEED EFFICIENCY, AND CARCASS GRADE WERE NOT SIGNIFICANTLY DIFFERENT FOR BEEF STEERS FED RATIONS IN WHICH THE SUPPLEMENTAL NITROGEN WAS SUPPLIED AS SOY BEAN OIL MEAL, HYDROLIZED POULTRY WASTE OR DRIED POULTRY WASTE. RATE OF GAIN WAS HIGHER (P .05) FOR THE STEERS FED THE RATION CONTAINING UREA. THE TREATED POULTRY WASTE RATIONS WERE READILY CONSUMED BY THE STEER*`@N jZuNDESIRABLE EFFECT ON CARCASS CHARACTERISTICS WERE FOUND. (WHITE-IOWA STATE)
Descriptors: *FARM WASTES ; *FEEDS ; *NITROGEN; POULTRY ; CATTLE ; SHEEP ; WASTE WATER TREATMENT
Section Heading Codes: 5D (Water Quality Management and Protection--Waste Treatment Processes); 5E (Water Quality Management and Protection--Ultimate Disposal of Wastes)

11/5/44 (Item 34 from file: 117)
DIALOG(R)File 117:Water Resour.Abs.
(c) format only 1994 Dialog Info.Svcs. All rts. reserv.

015975 W70-06897
AERATION SWEETENS HARBOR BASIN IN LOS ANGELES
CRUSE, HENRY
POMEROY, JOHNSTON AND BAILEY, PASADENA, CALIF.
WATER AND POLLUTION CONTROL, VOL 108, NO 4, P 42-44, APRIL 1970. 1 FIG.,
Journal Announcement: SWRA0317
A VEGETABLE OIL REFINERY IS DISCHARGING ABOUT 10,000 POUNDS OF BOD PER DAY TO SLIP NUMBER 5 IN THE LOS ANGELES HARBOR. THIS, ALONG WITH AN ESTIMATED 14,000 POUNDS OF BOD PER TIDAL CHANGE CAUSED A POLLUTION PROBLEM. IN 1968 A WIDER PROGRAM OF WATER QUALITY CONTROL WAS ENFORCED AND IT WAS NECESSARY TO PROVIDE TREATMENT. THE COST OF ON-SITE BOD TREATMENT WAS PROHIBITIVE, ON THE ORDER OF A QUARTER OF A MILLION DOLLARS, AND FORCED MAIN PUMPING TO THE NEAREST TREATMENT PLANT WOULD COST $420,000 FOR CONSTRUCTION AND $40,000 ANNUALLY. FINALLY IT WAS DECIDED TO TREAT THE ENTIRE BODY OF POLLUTED WATER. THE AVOIDANCE OF NAVIGATIONAL PROBLEMS ELIMINATED THE USE OF A SURFACE AERATOR AND A NOVEL AIR DIFFUSER HAD TO BE USED. THE AIR DIFFUSER IS ANCHORED TO THE BOTTOM OF THE BODY OF WATER AND IS HELD ERECT BY THE VERTICAL FLOW OF AIR. WHEN THE AIR FLOW IS SHUT OFF THE DIFFUSER WILL SINK TO THE BOTTOM AND THUS ALLOW SHIPS TO PASS OVER. NOT THE LEAST OF THE CONSIDERATIONS WAS THE ESTIMATED COST OF $130,000 CAPITAL COST, AND $20,000 ANNUAL COST, VERY MUCH LOWER THAN THE OTHER METHODS CONSIDERED. SLIP NUMBER 5 SHOWED AN UNEQUIVOCAL AND MARKED IMPROVEMENT. THIS ACHIEVEMENT WAS FOUND TO BE DUE TO TWO DIFFERENT EFFECTS EXERTED BY THE SYSTEM. FIRST, IT ACTED AS A MIXING DEVICE INCREASING THE DILUTION FACTOR TEN FOLD, AND SECOND, IT INCREASED SUPPLY OF DISSOLVED OXYGEN IN THE ORDER OF 1 LB OXYGEN PER HORSEPOWER HOUR. (HANCUFF-TEXAS)

BEST AVAILABLE COPY

Descriptors: *AERATION ; *WASTE WATER DISPOSAL ; *INDUSTRIAL WASTE ; *DISSOLVED OXYGEN; WASTE TREATMENT ; PERFORMANCE ; BIOCHEMICAL OXYGEN DEMAND ; COSTS
Section Heading Codes: 5D (Water Quality Management and Protection--Waste Treatment Processes)

11/5/45 (Item 35 from file: 117)
DIALOG(R)File 117:Water Resour.Abs.
(c) format only 1994 Dialog Info.Svcs. All rts. reserv.

011804 W70-02424
THE PROBLEM OF MAKING WASTE WATER SAFE AND ITS USE IN IRRIGATING LIGHT CHESTNUT SOILS IN THE POVOLZHYE AREA
SHUBIN, V. F.
VOLGOGRAD AGRICULTURAL INST. (USSR).
INTERNATIONAL CONGRESS OF SOIL SCIENCE, 9TH, ADELAIDE, AUSTRALIA, TRANSACTIONS, VOL I, P 405-413, 1968. 2 TAB.,
Journal Announcement: SWRA0306
THE AUTHOR REPORTS OF EXPERIMENTAL USE OF INDUSTRIAL AND URBAN WASTES TO IRRIGATE MILDLY ALKALINE SOILS IN THE SEMIARID LOWER VOLGA IN THE USSR. THE WATERS USED WERE THOSE WASTES NOT EMITTED FROM CHEMICAL INDUSTRIAL PROCESSES SUCH AS THOSE FROM SYNTHETIC RUBBER PLANTS. THE AUTHOR CONCLUDES THAT IT IS HIGHLY DESIRABLE TO RUN PILOT TESTS WITH THE WASTE WATERS AND SOILS OF ANY GIVEN REGION TO DEVELOP SUITABLE IRRIGATION PRACTICES BEFORE EMBARKING ON LARGE SCALE IRRIGATION PROJECTS. THE WASTE WATERS WERE FOUND USEFUL FOR IRRIGATION AND FERTILIZING AND THESE USES ALSO HELPED PURIFY THE WATERS. FOOD, FIBER, OIL-PRODUCING, FRUIT AND TOBACCO CROPS WERE SUCCESSFUL. IF THE WASTE WATERS WERE FREE OF TOXIC PROPERTIES, IT WAS FOUND THAT THEY COULD BE USED IF THEY WERE PROPERLY MIXED WITH SEWAGE AND CONDITIONALLY CLEANED WATERS. NO PROBLEM OF CONTAMINATION OF RIVERS, LAKES, PONDS AND OTHER NATURAL WATER RESOURCES WAS FOUND. (CROUSE-ARIZONA)
Descriptors: *WASTES ; *ARID LANDS ; *IRRIGATION PRACTICES ; *WATER REUSE ; *WATER POLLUTION TREATMENT; ALKALINE SOILS ; SOIL CHEMICAL PROPERTIES ; WATER POLLUTION SOURCES ; IRRIGABLE LAND ; WATER UTILIZATION ; WATER CONSERVATION
Section Heading Codes: 3C (Water Supply Augmentation and Conservation--Use of Water of Impaired Quality); 5D (Water Quality Management and Protection--Waste Treatment Processes)

11/5/46 (Item 1 from file: 8)
DIALOG(R)File 8:Ei Compendex*Plus(TM)
(c) 1994 Engineering Info. Inc. All rts. reserv.

03794089 E.I. No: EIP94011177478
Title: Home grown remedies cure Malaysia's mill waste pollution
Author: Kumarasivam, K.; Sornalingham, Mohan
Corporate Source: KTA Tenaga Sdn Bhd, Malays
Sourc~~Water Quality International~~ n 2 1993. p 32-33
Publication Year: 1993
CODEN: WQINEV ISSN: 0892-211X
Language: English
Document Type: JA; (Journal Article) Treatment: A; (Applications)
Journal Announcement: 9403W4
Abstract: Malaysian palm oil mills, once major polluters, have cleaned up their discharges with on-site *wastewater* *treatment*. To reach this stage the industry had to develop its own *treatment* technologies, spurred by government regulations and a national drive for *wastewater* *recycling*.
Descriptors: *Wastewater* *treatment*; *Recycling*; *Vegetable oils*; *oils*^Water pollution control
Identifiers: Mill waste; Palm oil industry; Malaysia
Classification Codes:
453.2 (Water Pollution Control); 822.1 (Food Products Plants &

265

Equipment)
453 (Water Pollution); 804 (Chemical Products); 822 (Food Technology)
45 (POLLUTION & SANITARY ENGINEERING); 80 (CHEMICAL ENGINEERING); 82 (AGRICULTURE & FOOD TECHNOLOGY)

11/5/47 (Item 2 from file: 8)
DIALOG(R)File 8:Ei Compendex*Plus(TM)
(c) 1994 Engineering Info. Inc. All rts. reserv.

03552296 E.I. Monthly No: EI9302018042
Title: *Recycling* of table olive brine using ultrafiltration and activated carbon adsorption.
Author: Garrido, A.; Garcia, P.; Brenes, M.
Corporate Source: Unidad Estructural de Investigacion de Biotecnologia de Alimentos, Sevilla, Spain
Source: Journal of Food Engineering v 17 n 4 1992 p 291-305
Publication Year: 1992
CODEN: JFOEDH ISSN: 0260-8774
Language: English
Document Type: JA; (Journal Article) Treatment: A; (Applications); X; (Experimental)
Journal Announcement: 9302
Abstract: Brines from green table olive *processing* are a highly polluted *waste* *water* which, at present, are discarded with the other liquid residues of the packing factories. They are thus difficult to treat at both plant and municipal *treatment* facilities. Their *recycling* could eliminate about 80% of the total pollution and facilitate *treatment* of the remaining liquid wastes. Field tests showed that *recycling* of such brines after *treatment* with both 0.6% (w/v) of activated carbon and ultrafiltration through a polysulphone membrane of 1000 daltons pore size can produce quantities of brine that, with minor composition adjustments, can be added to the solution employed for packing the final product. This can then be used in other operations where brine is required. A possible design of the regeneration *process* is also proposed. (Author abstract)
Descriptors: FOOD *PROCESSING*; *RECYCLING*; *VEGETABLE* *OILS*; BRINES; ULTRAFILTRATION; ACTIVATED CARBON; ADSORPTION
Identifiers: TABLE OLIVES; OLIVE *PROCESSING* BRINES; SDFIELD TESTS; LIQUID WASTES; POLYSULPHONE MEMBRANES; REGENERATION
Classification Codes
822 (Food Technology); 804 (Chemical Products); 802 (Chemical Apparatus & Plants)
82 (AGRICULTURE & FOOD TECHNOLOGY); 80 (CHEMICAL ENGINEERING)

11/5/48 (Item 3 from file: 8)
DIALOG(R)File 8:Ei Compendex*Plus(TM)
(c) 1994 Engineering Info. Inc. All rts. reserv.

03049317 E.I. Monthly No: EIM9104-013234
Title: Case study on sunflower seed oil industries waste characterization, classification and *treatment*.
Author: Senguel, Fuesun
Corporate Source: Dokuz Eyluel Univ, Bornova, Turk
Conference Title: Proceedings of the IAWPRC Symposium on Waste Management Problems in Agro-Industries
Conference Location: Istanbul, Turk Conference Date: 1989 Sep 25-27
Sponsor: IAWPRC; Istanbul Water and Sewerage Administration; Istanbul Technical Univ; Undersecretariat for the Environment, Turkey; Instanbul Chamber of Industry; et al
E.I. Conference No.: 13814
Source: ~~Water Science and Technology~~ v 22 n ~~5 1990~~. Publ by Pergamon Press Inc, Elmsford, NY, USA. p 241-248
Publication Year: 1990

BEST AVAILABLE COPY

CODEN: WSTED4 ISSN: 0273-1223
Language: English
Document Type: JA; (Journal Article) Treatment: X; (Experimental); A; (Applications)
Journal Announcement: 9104
Abstract: The sunflower seed oil industry is one of the most important industrial sectors. As a part of the agro-industry, sunflower seed oil production makes a significant contribution to environmental pollution in Turkey. A lot of research studies are known to be performed on the characterization and *treatment* of olive oil production wastes in Turkey, but the nature, amount, waste loads and *treatment* of the *wastewaters* produced by sunflower seed oil industries have not been studied to a great extent. In this study, a typical sunflower seed oil *refinery* in the city of Izmir was selected as representative of this sector. Method of production is evaluated and the *refinery* is investigated for the characterization of its *wastewaters*. During the first part of the test program, quality of combined and separate raw effluents was investigated. Possible physical-chemical *treatment* alternatives were studied using bench-scale laboratory models. Based on these studies, the most practicable and efficient combination of *treatment* operations and *processes* were pointed out. Waste segregation possibilities for minimization of *wastewater* quantities are investigated. In these investigations treated effluent quality has been evaluated with respect to the discharge parameters set by the present Turkish environmental legislation. (Author abstract) 10 Refs.
Descriptors: *VEGETABLE* *OILS*--*Wastes; FOOD PRODUCTS PLANTS--Effluent *Treatment*; INDUSTRIAL WASTES--Analysis; SANITARY ENGINEERING--Turkey
Identifiers: SUNFLOWER SEED OIL; WASTE CHARACTERIZATION; WASTE CLASSIFICATION; PHYSICOCHEMICAL *TREATMENT*; *WASTE* *MANAGEMENT*
Classification Codes:
804 (Chemical Products); 822 (Food Technology); 452 (Sewage & Industrial Wastes Treatment); 802 (Chemical Apparatus & Plants); 801 (Chemical Analysis & Physical Chemistry)
80 (CHEMICAL ENGINEERING); 82 (AGRICULTURE & FOOD TECHNOLOGY); 45 (POLLUTION & SANITARY ENGINEERING)

11/5/49 (Item 4 from file: 8)
DIALOG(R)File 8:Ei Compendex*Plus(TM)
(c) 1994 Engineering Info. Inc. All rts. reserv.

02746144 E.I. Monthly No: EI8906051100
Title: Biological *treatment* of Palm Oil Mill Effluent using Trichoderma viride.
Author: Abdul Karim, Mohamed Ismail; Ahmad Kamil, Ahmad Qalam
Corporate Source: Univ Pertanian Malaysia, Serdang, Malays
Source: ~~Biological Wastes~~ v 27 n 2 1989 p 143-152
Publication Year: 1989
CODEN: BIWAED ISSN: 0269-7483
Language: English
Document Type: JA; (Journal Article) Treatment: X; (Experimental)
Journal Announcement: 8906
Abstract: Research was undertaken to investigate the *treatment* of palm oil mill effluent (POME) using the fungus Trichoderma viride to reduce its *wastewater* strength, and to recover the microbial mass. More than 95% reduction in Chemical Oxygen Demand (COD) of the POME was achieved after 10-14 days of fermentation. The fungal biomass produced from the POME was 1.37-1.42 g/litre (dry weight) of mycelium with a crude protein content of 37.6-40.7%. (Author abstract) 16 Refs.
Descriptors: FOOD PRODUCTS PLANTS--*Effluent *Treatment*; *WASTEWATER*--Biological *Treatment*; FUNGI--Applications; *VEGETABLE* *OILS*--Wastes
Identifiers: PALM OIL; TRICHODERMA VIRIDE
Classification Codes:
822 (Food Technology); 452 (Sewage & Industrial Wastes Treatment); 804

11/5/50 (Item 5 from file: 8)
DIALOG(R)File 8:Ei Compendex*Plus(TM)
(c) 1994 Engineering Info. Inc. All rts. reserv.

01416919 E.I. Monthly No: EI8309080533 E.I. Yearly No: EI83102584
Title: SOLVENT RECOVERY.
Author: Myers, N. W.
Corporate Source: Myers Engineering, Decatur, Ill, USA
Source: JAOCS, Journal of the American Oil Chemists' Society v 60 n 2 Feb 1983, Proc of the World Conf on Oilseed and Edible Oil Process, The Hague, Neth, Oct 3-8 1982 p 224-225
Publication Year: 1983
CODEN: JJASDH ISSN: 0003-021X
Language: ENGLISH
Journal Announcement: 8309
Abstract: A brief overview is presented of the economic significance of solvent recovery in the oilseed extraction industry. The present solvent recovery practices in oilseed plants are outlined with addition of operating techniques since 1976. Also, industry trends are noted in terms of improved equipment. Information is presented on the expected solvent losses in various recovery steps in the normal solvent plant operation. Techniques for measuring solvent losses in vent gas effluent, *waste* *water* effuent and extracted oil production stream are outlined. The areas of greatest solvent loss are the desolventizer-toaster (DT) meal outlet stream and the various mechanical leaks in the *process* manchinery. 7 refs.
Descriptors: *VEGETABLE* *OILS*--*Extraction; SOLVENTS--*Recycling*; ECONOMICS; CHEMICAL OPERATIONS; CHEMICAL EQUIPMENT--Design
Identifiers: SOLVENT RECOVERY; OILSEED EXTRACTION
Classification Codes:
804 (Chemical Products); 822 (Food Technology); 802 (Chemical Apparatus & Plants); 601 (Mechanical Design); 911 (Industrial Economics)
80 (CHEMICAL ENGINEERING); 82 (AGRICULTURE & FOOD TECHNOLOGY); 60 (MECHANICAL ENGINEERING); 91 (ENGINEERING MANAGEMENT)

11/5/51 (Item 6 from file: 8)
DIALOG(R)File 8:Ei Compendex*Plus(TM)
(c) 1994 Engineering Info. Inc. All rts. reserv.

01273254 E.I. Monthly No: EIM8301-006399
Title: INDUSTRIAL *WASTEWATER* *MANAGEMENT* BY CONTROL AT SOURCE AND BY RECLAMATION OF USEFUL MATERIALS.
Author: Appleyard, Colin J.
Corporate Source: Binnie & Partners, London, Engl
Conference Title: [redacted].
Conference Location: Exeter, Engl Conference Date: 1981 Sep 23-24
Sponsor: Inst of Chem Eng, Rugby, Engl; Eur Fed of Chem Eng
E.I. Conference No.: 01431
Source: EFCE Publication Series (European Federation of Chemical Engineering) n 24 Publ by Inst of Chem Eng (Symp Ser n 67), Rugby, Warwickshire, Engl p 121-132
Publication Year: 1981
CODEN: EPSEDI ISBN: 0-85295-142-6
Language: English
Document Type: PA; (Conference Paper)
Journal Announcement: 8301
Descriptors: *WASTEWATER*
Identifiers: APPLICATION OF AT-SOURCE TECHNOLOGY TO CONSERVE WATER; *MINIMIZATION* OF *WASTE*; CONVERSION OF WASTE MATERIALS TO BYPRODUCTS; APPLICATIONS IN FOOD INDUSTRY, INCLUDING FRUIT AND *VEGETABLE* *PROCESSING* ; EDIBLE *OIL* *REFINING* AND FISH *PROCESSING*; APPLICATIONS IN METAL FINISHING AND ENGINEERING INDUSTRIES; APPLICATIONS IN MEATS, HIDES AND SKINS INDUSTRY; FACTORS GOVERNING *WATER* REQUIREMENTS AND *WASTE*

BEST AVAILABLE COPY

GENERATION
Classification Codes:
453 (Water Pollution); 452 (Sewage & Industrial Wastes Treatment)
45 (POLLUTION & SANITARY ENGINEERING)

11/5/52 (Item 7 from file: 8)
DIALOG(R)File 8:Ei Compendex*Plus(TM)
(c) 1994 Engineering Info. Inc. All rts. reserv.

00468849 E.I. Monthly No: EI7507045554 E.I. Yearly No: EI75037202
Title: NATIONAL SYMPOSIUM ON FOOD *PROCESSING* WASTES.
Author: Symp
Source: Environ Prot Technol Ser EPA 660/2-74-058, Jun 1974, for Meet, Monterey, Calif, Apr 17-19 1974, 321 p
Publication Year: 1974
CODEN: EPTSBT ISSN: 0092-8054
Language: ENGLISH
Journal Announcement: 7507
Abstract: The Proceedings contains copies of 19 of the 20 papers presented at the two and one-half day symposium. Typical papers include: *wastewater* characterization for the specialty food industry; *treatment* of shrimp *processing*, rum distillery, *vegetable* *oil* *refinery*, and meat *processing* *wastewaters*; *process* modifications for cleaning and peeling of tomatoes, and blanching and cooling of vegetables; by-product recovery from meat *processing* wastes, fish *processing* wastes, and waste activated sludge; *wastewater* *reuse* in poultry *processing*; and economics of treating fruit and vegetable *processing* *wastewaters*. References accompany individual papers.
Descriptors: INDUSTRIAL WASTES; FOOD PRODUCTS--*Processing*; WATER POLLUTION
Classification Codes:
452 (Sewage & Industrial Wastes Treatment); 453 (Water Pollution); 822 (Food Technology)
45 (POLLUTION & SANITARY ENGINEERING); 82 (AGRICULTURE & FOOD TECHNOLOGY)

11/5/53 (Item 1 from file: 6)
DIALOG(R)File 6:NTIS
Comp. & distr. 1994 NTIS, US Dept of Commerce. All rts. reserv.

482744 NTIS Accession Number: PB-247 490/6
Use of Chitosan for the Reduction and Recovery of Solids in Poultry Processing Waste Effluents
Bough, Wayne A. ; Shewfelt, A. L. ; Salter, W. L.
Georgia Univ., Experiment. Div. of Food Science
Corp. Source Codes: 406783
Sponsor: National Oceanic and Atmospheric Administration, Rockville, Md. Office of Sea Grant.
Report No.: NOAA-75111305
6 Sep 74 10p
Document Type: Journal article
Journal Announcement: GRAI7605
Pub. in Poultry Science, v54 p992-1000 1975.
NTIS Prices: PC A02
Contract No.: NOAA-04-5-158-4
Treatment of poultry processing wastes with chitosan as a coagulating agent reduced suspended solids in the composite effluents by 74-94%. The combined effects of chitosan and dissolved air flotation (DAF) reduced suspended solids and COD in the chiller effluent by 82% and 62%, respectively, and in the scalder effluent by 77% and 46%. The dry coagulated solids from the chiller effluent contained an average of 36.5% crude protein and 54.2% fat. Corresponding values for the scalder effluent

were 67.9% crude protein and 0.7% fat. The value of coagulated by-products as animal feed supplements, the reduction in total waste load, and the possibility of recycling clarified chiller and scalder effluents commend coagulation pretreatment and by-product recovery. Since chitosan is derived from shrimp and crab solid wastes, the coagulated solids could feasibly be rendered with other poultry by-products into feed supplements if official approval for use is obtained.

Descriptors: *Materials recovery; *Water pollution control; Coagulants; Chitin; Crustacea; Waste water; Circulation; Water treatment; Solids; Vegetable oils; Food industry; Poultry; Flotation; Dissolved gases

Identifiers: *Chitosan; *Poultry food processing; Dissolved air flotation ; Sea Grant program; NTISCOMNOA

Section Headings: 13B (Mechanical, Industrial, Civil, and Marine Engineering--Civil Engineering), 68D (Environmental Pollution and Control--Water Pollution and Control); 98H (Agriculture and Food--Food Technology)

11/5/54 (Item 1 from file: 399)
DIALOG(R)File 399:CA Search(R)
(c) 1994 American Chemical Society All rts reserv.

117051149 CA: 117(6)51149x PATENT

The use of compounds containing polyether chains, prepared from epoxidized carboxylic acid derivatives, in deinking of wastepaper and paper wastewaters

INVENTOR(AUTHOR): Daute, Peter; Schreck, Berthold; Hornfeck, Klaus

LOCATION: Germany,

ASSIGNEE: Henkel K.-G.a.A.

PATENT: Germany Offen. ; DE 4032050 A1 DATE: 920416

APPLICATION: DE 4032050 (901009)

PAGES: 5 pp. CODEN: GWXXBX LANGUAGE: German CLASS: D21C-005/02A

SECTION:

CA243007 Cellulose, Lignin, Paper, and Other Wood Products

CA260XXX Waste Treatment and Disposal

IDENTIFIERS: deinking agent wastepaper wastewater, polyoxyalkylene deinking agent, soybean oil epoxidized deinking agent

DESCRIPTORS:

Paper,waste-...
deinking agents for, polyoxyalkylene derivs. as
Recycling...
of wastepaper, deinking agents for use in
Alcohols,tallow, ethoxylated,compounds...
reaction products, with epoxidized oils, deinking agents, for wastepaper and wastewater
Inks,printing...
removal of, from wastepaper and wastewater, agents for
Polyoxyalkylenes,reaction products,compounds...
with epoxidized oils, deinking agents, for wastepaper and wastewater
Soybean oil,epoxidized, reaction products...
with polyoxyalkylenes, deinking agents, for wastepaper and wastewater

CAS REGISTRY NUMBERS:

9004-74-4D 9004-99-3D 25322-68-3D 26635-92-7D reaction products with epoxidized soybean oil, deinking agents, for wastepaper and wastewater

BEST AVAILABLE COPY

270

11/5/55 (Item 2 from file: 399)
DIALOG(R)File 399:CA Search(R)
(c) 1994 American Chemical Society. All rts. reserv.

114011696 CA: 114(2)11696e PATENT
Recovery of oil and clean water from wash water in refining of vegetable oils
INVENTOR(AUTHOR): Martins, Edson Rodrigues
LOCATION: [redacted]
PATENT: Brazil Pedido ; BR 8805270 A DATE: 900529
APPLICATION: BR 885270 (881013)
PAGES: 5 pp. CODEN: BPXXDX LANGUAGE: Portuguese CLASS: C02F-001/40A
SECTION:
CA260003 Waste Treatment and Disposal
CA217XXX Food and Feed Chemistry
CA261XXX Water
IDENTIFIERS: vegetable oil wash water purifn
DESCRIPTORS:
Wastewater treatment,recycling...
of wash water, from vegetable oil prodn , coagulation and centrifugation in
Wastewater treatment,coagulation...
oil and clean water recovery by, of wash water in vegetable oil prodn.
Wastewater treatment,centrifugation...
oil recovery by, of wash water in vegetable oil prodn.
Oils,glyceridic, vegetable...
prodn. of, wash water recycling in, coagulation and centrifugation for

11/5/56 (Item 3 from file: 399)
DIALOG(R)File 399:CA Search(R)
(c) 1994 American Chemical Society. All rts. reserv.

104067476 CA: 104(9)67476u JOURNAL
Effect of three-stage culture of fodder yeasts on molasses vinasse enriched by waste fats from vegetable oil manufacture on reduction of wastewater pollution
AUTHOR(S): Kramarz, Marek; Ziobrowski, Jerzy
LOCATION: Inst. Technol. Przem. Chem. Spozyw., Akad. Ekon., Wroclaw, Pol.
JOURNAL: Przem. Ferment. Owocowo-Warzywny DATE: 1985 VOLUME: 29
NUMBER: 4 PAGES: 19-21 CODEN: PFOWDZ ISSN: 0137-2645 LANGUAGE: Polish
SECTION:
CA116007 Fermentation and Bioindustrial Chemistry
CA160XXX Waste Treatment and Disposal
IDENTIFIERS: vinasse COD yeast culture waste, fat vinasse COD yeast culture
DESCRIPTORS:
Yeast,fodder...
cultivation of, on vinasse, waste fats in
Wastes...
fats, from vegetable oil manuf., in yeast cultivation on vinasse
Fats,biological studies...
from vegetable oil manuf., in yeast cultivation on vinasse
Oils...
vegetable, waste fats from manuf. of, in yeast cultivation on vinasse
Vinasse and Distillery slops...
yeast cultivation on, waste fats in

11/5/57 (Item 4 from file: 399)
DIALOG(R)File 399:CA Search(R)
(c) 1994 American Chemical Society. All rts. reserv.

94086086 CA: 94(12)86086h PATENT
Refining animal or vegetable oils and fats
INVENTOR(AUTHOR): Watanabe, Haruo; Watanabe, Mutsuhito; Arima, Takao
~~LOCATION: Japan~~,
ASSIGNEE: Showa Sangyo Co., Ltd.
[redacted] Germany Offen. DE 3023589 DATE: 810122
APPLICATION: Japan JP 7979127 DATE: 790625
PAGES: 19 pp. CODEN: GWXXBX LANGUAGE: German CLASS: C11B-003/00;
SECTION:
CA045002 Fats and Waxes
CA017XXX Foods
IDENTIFIERS: refining fat oil wastewater redn, soybean oil refining, rape oil refining, corn oil refining, tallow refining
DESCRIPTORS:
Corn oil... Oils... Rape oil... Soybean oil... Tallow...
refining of, with reduced formation of wastewater

11/5/58 (Item 5 from file: 399)
DIALOG(R)File 399:CA Search(R)
(c) 1994 American Chemical Society. All rts. reserv.

82021318 CA: 82(4)21318t JOURNAL
Water management and waste water purification
AUTHOR(S): Csomos, Laszlo
LOCATION: Hung.
[redacted]. DATE: 1973 VOLUME: 22 NUMBER: 3
PAGES: 86-9 CODEN: OSZKAT [redacted]
SECTION:
CA960000 Sewage and Wastes
CA945XXX Fats and Waxes
CA946XXX Surface-Active Agents and Detergents
CA961XXX Water
IDENTIFIERS: review wastewater purifn, vegetable oil wastewater review, soap manuf wastewater review
DESCRIPTORS:
Waste water treatment Waters,potable...
management of

BEST AVAILABLE COPY