PN-ABY-036
Report 3114-95-26-25
ISN 98413

The Hashemite Kingdom of Jordan

Ministry of Water and Irrigation

Water Quality Improvement and Conservation Project

Industrial Audit:

Al-Hussein Thermal Electric Power Station

Harza Environmental Services, Inc.

Development Alternatives, Inc.

USAID

The Technical Assistance Team Includes:

Development Alternatives, Inc.
Science Applications International Corp.
Harza Environmental Services, Inc.
Development Associates, Inc.

United States Agency for International Development
Contract No. 278-0288-00-C-4026-00

March 1995

AUDIT REPORT
AL HUSSEIN THERMAL ELECTRIC POWER STATION
JORDAN

Submitted to:
United States Agency
for International Development

Submitted by:
Development Alternatives, Inc.

Prepared for:
Amman Chamber of Industry, Jordan
Ministry of Water and Irrigation, Jordan

Prepared by:
Harza Consulting Engineers and Scientists
Chicago, Illinois, USA
in association with
Royal Scientific Society
Amman, Jordan

b

PREFACE/ACKNOWLEDGMENTS

This report is the result of a 4-week study/audit/evaluation of the Al Hussein Thermal Electric Power Plant, Jordan. The purpose of the study was to evaluate and identify potential pollution prevention/waste minimization and water conservation techniques which are appropriate. The executive summary on the following pages outlines the consultants findings and actions during the study/audit/evaluation.

Several individuals on the Water Quality Improvement and Conservation Project contributed to this report. Dr. Usama Mudallal of the Amman Chamber of Industry (Chamber); Engineer Rania Abdul Khaleq of the Ministry of Water and Irrigation (MWI); Mr. Nabil Hejazin, of the Water Authority of Jordan (WAJ); and Dr. Riyad Musa and Eng. Rafat Assi of the Royal Scientific Society of Amman; plant managerial and technical staff including Eng. Rashid Al-Tineh, Plant Manager, Eng. Safi Al-Ali, Operation Section Head, and Eng. Faisal Hamid, Chemical Section Head; shared their knowledge with Dr. Jeffrey Cline, of Harza Consulting Engineers and Scientists (Harza), Chicago, USA. These technical staff worked under the direction of Dr. Shawn R. Niaki, P.E., Pollution Prevention Program Director, of Harza, who heads the WQIC component under which the study/audit/evaluation was housed. It is from their combined expertise that this report was possible.

Special appreciation is given to Dr. Mohammed Bani Hani, Secretary General of MWI; Eng. Koussai Quteishat, Secretary General of WAJ; Mr. Khaldun Abuhassan, Chairman of the Chamber; Mr. Walid Al-Khathib, Director General of the Chamber; Dr. Muwaffaq Saqqar of MWI, Project Coordinator of MWI; Dr. Raja Gadoun, Director of theWAJ Laboratories; Eng. Randa Dufaha of theWAJ Laboratories; the members of the PP/WM working group from WAJ including Eng. Abdul Wahab Matar, Eng. Marwan Al-Tal, Eng. Mohamad Lafi; and to Development Alternatives, Inc., as represented by Edwin D. Stains, Chief of Party; for their cooperation and confidence.

C

TABLE OF CONTENTS

1.0 INTRODUCTION 1
- 1.1 Background 1
- 1.2 Objective 1
- 1.3 Report 2

2.0 PROCESS AND FACILITY DESCRIPTION 3
- 2.1 General 3
- 2.2 Facility Description 3
- 2.3 Power Generation Process 3
- 2.4 Environmental Regulations and Guidelines 4

3.0 AUDIT PROCESS 5
- 3.1 Audit Coordination 5
- 3.2 PP/WM Background Material Report 5
- 3.3 Pre-Inspection Meeting 6
- 3.4 Audit 6
- 3.5 Post-Inspection Meeting 7

4.0 AUDIT FINDINGS 8
- 4.1 Overall Water Usage and Balance 8
  - 4.1.1 Process Water 8
  - 4.1.2 Cooling Water 9
  - 4.1.3 Domestic Uses 9
- 4.2 Wastewater Sources and Discharges 9
  - 4.2.1 Wastewater Sources 9
  - 4.2.2 Wastewater Discharges 11
- 4.3 Storm Water 11
- 4.4 Chemicals 12
- 4.5 Solid Waste 12
- 4.6 Air Emissions 12
- 4.7 Data Gaps 13

5.0 POLLUTION PREVENTION AND WASTE MINIMIZATION POTENTIAL . . 14
- 5.1 General 14
- 5.2 Wastewater 14
  - 5.2.1 Cooling Water 14
  - 5.2.2 RO Reject/IX Regenerant Wastewater 15
  - 5.2.3 Brine Disposal 16
  - 5.2.4 Washdowns/Floor Drains 17
  - 5.2.5 Spills and Leaks 18
  - 5.2.6 Boiler Tube and Turbine Cleaning Wastewater 18

5.2.7 Domestic Wastewater 18
5.2.8 Process Support Systems 19
5.2.9 Storm Water 19
5.3 Solid Wastes 20
5.4 Air Emissions 20
5.5 Summary of PP/WM Measures 21

6.0 WATER CONSERVATION POTENTIAL 22
6.1 General 22
6.2 Alternative Processes 22
6.2.1 Air Cooling Systems 22
6.2.2 Combination Steam/Gas Driven Generators 22
6.3 Vented Steam 22
6.4 Process Support Systems 23
6.5 Process Wastewater 23
6.5.1 Boiler Water Blowdown 23
6.5.2 Cooling Water Blowdown 23
6.5.3 Water Treatment 23
6.6 Washdowns 23
6.7 Boiler Tube Cleaning Wastewater 24
6.8 Domestic Water 24
6.9 Storm Water 24
6.10 Process Optimization and Maintenance 24
6.11 Conceptual Water Balance 25

7.0 CONCLUSIONS AND RECOMMENDATIONS 26
7.1 Conclusions 26
7.2 Recommendations 27
7.3 Success Stories 30

8.0 FOLLOW-UP ACTIONS 31

APPENDICES

Appendix A. Audit Questionnaire
Appendix B. Follow-up Questionnaire
Appendix C. Support Data Provided by the Industry
Appendix D. Background Material Report
Appendix E. Applicable Water Quality Criteria: Jordanian Standard 202 and FAO Guidelines
Appendix F. Al Hussein Thermal Electric Power Station Photos

TABLES

Table 1: Analytical Data for Wastewater Discharged to As Samra, 1994
Table 2: HTPS Water Balance
Table 3: Groundwater Quality Data
Table 4: HTPS Water Consumption and Potential Water Conservation

FIGURES

Figure 1: The Al Hussein Thermal Power Station Schematic
Figure 2: The Steam Cycle: Al Hussein Thermal Power Station
Figure 3: Generalized Waste and Water Diagram for a Typical Oil-Fired Steam Electric Power Plant
Figure 4: Overall Water Balance
Figure 5: Water Balance With Recycle and Reuse

ABBREVIATIONS

Organizations

API	American Petroleum Institute
CHAMBER	Amman Chamber of Industry
DAI	Development Alternatives, Inc.
FAO	Food and Agricultural Organization
HTPS	Al Hussein Thermal Power Station
JPRC	Jordan Petroleum Refining Company
MWI	Ministry of Water and Irrigation
RSS	Royal Scientific Society
USAID	United State Agency for International Development
WAJ	Water Authority of Jordan
WQICP	Water Quality Improvement and Conservation Project

General Terms

IWDPP	Industrial Wastewater Discharge Prevention Program
PP/WM	Pollution Prevention/Waste Minimization

Engineering Terms

Processes

RO	Reverse Osmosis
IX	Ion Exchange

Chemicals

SO_2	Sulfur dioxide
HCl	Hydrochloric acid
NaOH	Sodium Hydroxide (Caustic soda)
TDS	Total dissolved solids

Units

m^3/h	Cubic meters per hour
g/l	Grams per liter
Kg	Kilograms
μS/cm	Micro siemens per centimeter
MW	Mega Watt
bbl	Barrel, equivalent to 42 gallons
km	Kilometers
t	Metric ton
h	Hour

EXECUT 'E SUMMARY

Development Alternatives, Inc. (DAI) under Contract No. 278-0288-00-C-4026-00 with the United States Agency for International Development (USAID) is performing an Industrial Wastewater Discharge Prevention Program (IWDPP) in Amman, Jordan. This Program is one of four components of the Water Quality Improvement and Conservation Project (WQICP) funded by USAID. This program is being performed by DAI with full coordination between the Ministry of Water and Irrigation (MWI) and the Amman Chamber of Industry (Chamber). Harza Consulting Engineers and Scientists (Harza), Chicago, United States (US), was retained by DAI to lead the IWDPP. The Royal Scientific Society (RSS) of Amman, Jordan was selected as a local consultant to assist Harza with the IWDPP. This program includes conducting the PP/WM audits, feasibility studies and designing demonstration facilities at selected industrial facilities.

Based on a ranking methodology, the PP/WM Committee has selected ten industries with potential needs for PP/WM audits. The purpose of the audits is to assist the industries in the Amman-Zarqa Basin in assessing pollution problems and developing alternative solutions to achieve desired levels of PP/WM, water conservation, and wastewater treatment appropriate for the selected industry. One of these industries is the Thermal Electric Power Industry. The Harza/RSS team conducted an audit of the Al Hussein Thermal Electric Power Station, representing the first step of the IWDPP. This report summarizes the results of the audit.

FACILITY AND PROCESS DESCRIPTIONS

The Al Hussein Thermal Power Station began operation in 1975. The facility contains housing for 300 people, a substation for transmitting electricity, seven power generating units, a fuel storage tank farm, a water storage area, a workshop area, wastewater tanks, pumping stations, an irrigation area and a wastewater treatment and holding area.

The facility generates 350 MW of electricity. The HTPS uses fuel oil as the energy source to generate steam. The facility has a total of seven units, each with its own turbine for power generation. Usually all seven units are in operation and generate power.

The HTPS uses No. 4 fuel oil (approximately 2,000 t/day) as its energy source for the boilers. The HTPS receives fuel oil directly from the Jordanian Petroleum Refinery Company (JPRC). The fuel oil has a caloric value of 10,600 Kcal/kg and a high sulfur content of 3.6 percent. The fuel oil is stored in 12 primary storage tanks such that 35,000 tons of fuel oil are usually in reserve.

The power generation process includes the following support systems:

- Plant Air Systems;
- Closed Bearing Cooling Water Systems;
- Turbine Lube Oil Systems;
- Fuel Oil Systems;
- Water Demineralizing System using Reverse Osmosis (RO) and Ion Exchange (IX);
- Boiler Chemical Feed System including Amine, Hydrazine, and Phosphate Injection for Treating Boiler Water; and
- Auxiliary Boiler Steam System.

ENVIRONMENTAL REGULATIONS AND GUIDELINES

Jordan currently has no comprehensive law to control water, air and soil pollution. However, industrial wastewater discharges are regulated by the Jordanian Standard 202, adopted in 1981 by the Department of Standards and Specifications and revised in 1990. Standard 202 regulates industrial wastewater discharges to rivers, wadis, groundwater, the sea, and reuse for irrigation.

Drinking water quality is regulated by Jordanian Standard 286. Moreover, it is a common practice to use the Food and Agriculture Organization (FAO) guidelines as a reference.

AUDIT

The initial facility audit was conducted on October 29 and 31, 1994. The audit team, accompanied by two HTPS representatives, toured and inspected the facility. An audit questionnaire was used to address the specific details of the procedure. Due to the complexity of the processes and water management system at the power station, additional visits were conducted on November 5 and 12, 1994.

AUDIT FINDINGS

Water Usage

The total water consumption at HTPS is approximately 130 m^3/h. This water usage can be broken down into the three main categories listed below:

- Process Water (70 m^3/h);
- Cooling Water (25 m^3/h); and
- Domestic Water (35 m^3/h).

A schematic detailing the overall water balance for HTPS is provided on Figure ES-1 and is summarized in Table ES-1.

- 2'

Wastewater Sources

The main wastewater sources are:

- RO Reject (20 m^3/h);
- IX Regenerant (10 m^3/h);
- Cooling Water Blowdown (5 m^3/h);
- Boiler Blowdown (7 m^3/h);
- Domestic Wastewater (20 m^3/h);
- Washdowns, Spills and Leaks (15 m^3/h);
- Soot Blowing Wastewater (4 m^3/h);
- Sampling Panel Wastewater (5 m^3/h);
- Storm Water; and
- Boiler Tube Cleaning Wastewater.

Wastewater Discharges

All process wastewater is discharged to a large, underground concrete oil/water separator. The majority of process wastewater from the oil/water separator is pumped to the As Samra Wastewater Treatment Plant, along with the domestic wastewater. The volume of wastewater discharged to As Samra is estimated to be 71 m^3/h, however, the exact amount is not known due to the lack of quantitative wastewater monitoring.

A small portion of the wastewater (10 m^3/h) is used for irrigation. Approximately 12 acres of trees are irrigated using process wastewater. Trees which have been receiving wastewater appeared to be dying in some instances.

Approximately 44 m^3/h of wastewater is evaporated and about 5 m^3/h is estimated to be lost due to infiltration.

Storm Water

There is no storm water management program currently in place at the HTPS. All storm water is either collected by the surface drains, runs off the surface to the Wadi or infiltrates through the ground. The water that is collected by the sewer system flows to the oil/water separator and is eventually discharged to the As Samra Wastewater Treatment Plant.

Solid Waste

Solid wastes generated at the HTPS include domestic wastes, laboratory wastes, solids from the plant, paint wastes and scrap metals. Most of these wastes are apparently shipped to the local domestic landfill for disposal. A significant amount of scrap metal is stored in a scrap yard located on the grounds behind the facility.

'3'

Air Emissions

Air emissions at the facility are not measured or monitored. However, the following three types of air emissions are assumed present at the facility:

- Sulfur Dioxide;
- Steam; and
- Nitrous Oxide.

PP/WM AND WATER CONSERVATION OPPORTUNITIES

Several PP/WM and water conservation opportunities exist at the HTPS facility. By implementing the following measures, total water usage can be reduced to 98 m^3/h (25 percent reduction), and fresh water usage can be reduced to 52 m^3/h (56 percent reduction). Figure ES-2 presents the proposed water usage plan.

Wastewater

- Reduce the quantity and improve the quality of cooling water blowdown by providing make up water pretreatment;
- Reduce the volume of RO reject and IX regenerant wastewater through process optimization and alternative technologies;
- Contain and evaporate concentrated brine to avoid off-site discharges;
- Improve housekeeping protocols and procedures to prevent water lost to washdowns, spills and leaks;
- Treat, recycle and reuse domestic and process wastewater;
- Reduce domestic water consumption by installing meters and flow control devices;
- Install a boiler tube cleaning wastewater treatment system and recycle treated water;
- Reduce process water consumption through implementing process optimization measures;
- Recycle and reuse boiler blowdown; and
- Capture and reuse vented steam.

4

Storm Water

- Develop and implement a storm water management plan to collect and reuse storm water for facility processes.

Solid Waste

- Develop a policy to maximize the potential for recycling of domestic solid wastes and to classify and dispose of industrial solid wastes.

Air Emissions

- Consider a plan for reduction in SO_2 emissions by purchasing low sulfur fuel or installing SO_2 scrubbers.

RECOMMENDATIONS

To achieve PP/WM and water conservation objectives, our recommendations are:

1. Implement PP/WM and water conservation measures discussed above.

2. Immediately initiate a wastewater monitoring program to determine the quality and quantity of wastewater discharged.

3. Develop an environmental management program to include:

   - Establishing an Environmental Department with dedicated personnel and sufficient resources;

   - Writing an environmental policy with mission, goals, and plan of action;

   - Developing training and incentive programs for all HTPS personnel.

4. Carefully monitor the use of high TDS wastewater for irrigation purposes and initiate a groundwater monitoring program to document groundwater quality.

5. Consider the following items for possible PP/WM feasibility studies:

   - Optimization of RO and IX processes and cooling water blowdown;
   - Treatment and recycling of domestic and process wastewater;
   - Reduction of domestic water use; and
   - Implementation of process water monitoring.

5

6. Publicize program success stories and reward employees that identify cost-effective PP/WM and water conservation opportunities.

7. Perform periodic assessments of PP/WM and water conservation progress by key management personnel and independent experts.

6

TABLE ES-1
HTPS WATER CONSUMPTION AND POTENTIAL WATER CONSERVATION

Water Use Center	Current Fresh Water Consumption (m^3/h)	Proposed Water Consumption (m^3/h)			Measures
		Total Process Consumption	Recycle Potential	Net Fresh Water Consumption	
Process Water	**70**	**53**	**19**	**34**	
Sampling Panel	5	3	0	3	Modify procedure
Soot Blowing	4	1	0	1	Use high pressure air
Auxiliary Boilers	5	5	0	5	
Bearing Cooling	1	1	0	1	
Fuel Atomizing	6	3	0	3	Use high pressure steam
Boiler Blowdown	7	7	7	0	Recycle
Vented Steam	12	12	12	0	Condense and recycle
Ion Exchange Regenerant	10	7	0	7	Optimization
RO Reject	20	14	0	14	Optimization
Cooling Water	**25**	**27**	**22**	**5**	
Evaporation Losses	20	20	20	0	Condense and Recycle
Blowdown	5	3	2	1	Pretreat and Recycle
RO Reject	0	4	0	4	
Domestic Uses	**35**	**18**	**0**	**18**	
Washdowns/Spills/Leaks	15	8	0	8	Good Housekeeping, Better Control
Domestic Water	20	10	0	10	Tighter Control/Better Management/Recycle
TOTAL	130	98	41	57	

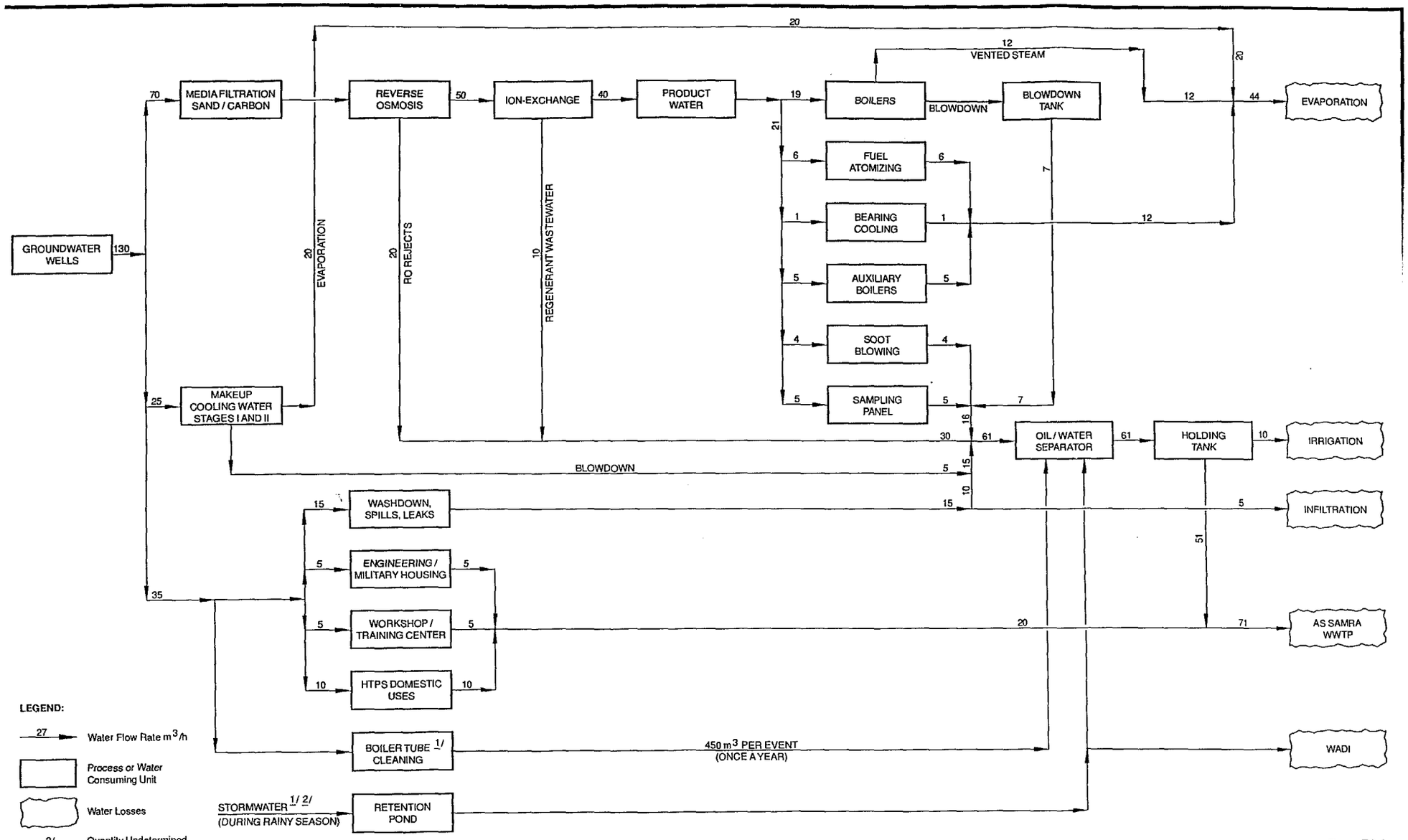

HARZA Consulting Engineers and Scientists

Figure ES-1
OVERALL WATER BALANCE
AL HUSSEIN THERMAL POWER STATION
Amman, Jordan

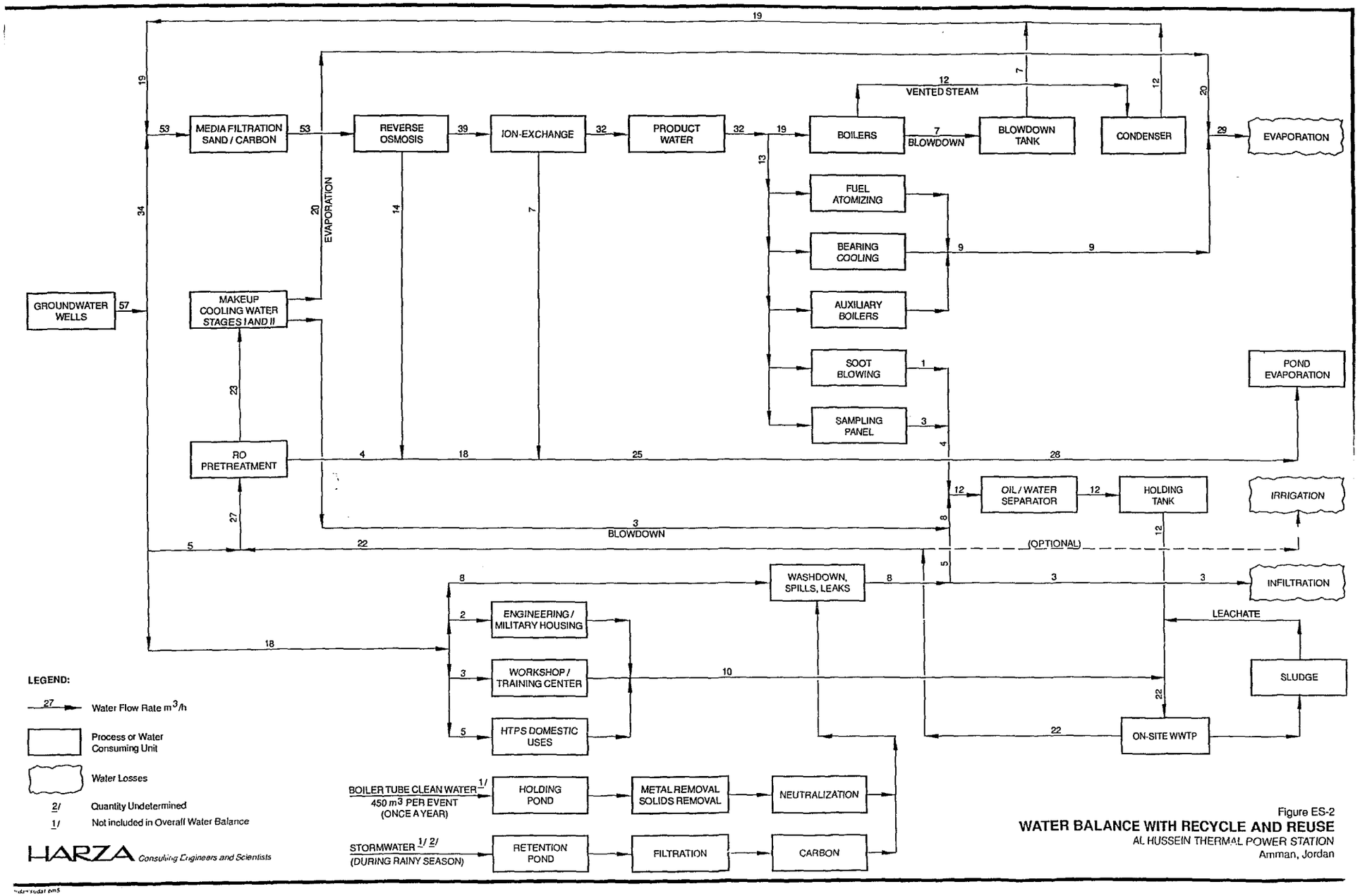

Figure ES-2
WATER BALANCE WITH RECYCLE AND REUSE
AL HUSSEIN THERMAL POWER STATION
Amman, Jordan

1.0 INTRODUCTION

This report presents the findings of an audit for pollution prevention, waste minimization (PP/WM) and water conservation for the thermal electric power industry in Jordan using the Al Hussein Thermal Electric Power Station (HTPS) as the basis. The report includes a project background and objectives, brief process descriptions, audit process details, potential for PP/WM and water conservation, conclusions, recommendations and follow-up actions.

1.1 Background

Development Alternatives, Inc. (DAI) under Contract No. 278-0288-00-C-4026-00 with the United States Agency for International Development (USAID) is performing an Industrial Wastewater Discharge Prevention Program (IWDPP) in Amman, Jordan. This Program is one of four components of the Water Quality Improvement and Conservation Project (WQICP) funded by USAID. This program is being performed by DAI with full coordination between the Ministry of Water and Irrigation (MWI) and the Amman Chamber of Industry (Chamber). Harza Consulting Engineers and Scientists (Harza), Chicago, United States (US), was retained by DAI to lead the IWDPP. The Royal Scientific Society (RSS) of Amman, Jordan was selected as a local consultant to assist Harza with the IWDPP. This program includes conducting the PP/WM audits, feasibility studies and designing demonstration facilities at selected industrial facilities.

The PP/WM techniques are defined as any techniques to prevent or reduce waste generation by source reduction or recycling activities. These activities must reduce either the volumes or the concentrations of pollutants generated prior to treatment, storage, or disposal of the waste.

Based on a ranking methodology, the PP/WM Committee has selected ten industries with potential needs for PP/WM audits. The purpose of the audits is to assist the industries in the Amman-Zarqa Basin in assessing pollution problems and developing alternative solutions to achieve desired levels of PP/WM, water conservation, and wastewater treatment appropriate for the selected industry. One of these industries is the Thermal Electric Power Industry. The Harza/RSS team conducted an audit of the Al Hussein Thermal Electric Power Station, representing the first step of the IWDPP. This report summarizes the results of the audit.

1.2 Objective

The objective of conducting a PP/WM audit of the Al Hussein Thermal Power Station was to understand the water, wastewater and associated waste management practices currently employed at the HTPS and to identify opportunities for PP/WM and water conservation that may exist at the facility.

The findings of the audit were used to develop recommendations and follow-up actions to assist the HTPS in assessing the extent of pollution. Suggested approaches for water conservation and process modifications to achieve additional PP/WM and water conservation are provided.

1.3 Report

This report contains a description of the thermal electric power generating process, audit procedures, audit findings, opportunities for PP/WM and water conservation and conclusions derived from the audit finding. Recommendations and follow-up actions necessary to assess the extent of pollution as well as to implement PP/WM and water conservation measures at the HTPS facility are also included.

Appendices attached to this report include support information obtained during the audit and additional information provided by the industry. Appendices A, B and C of the report contain information collected during the audit; an audit questionnaire, a follow-up questionnaire prepared to collect additional facility specific information, and support documentation including the process details and water balance information provided by the HTPS, respectively. A copy of the Background Material Report is included in Appendix D, the reference material collected by Harza in the US, as part of this audit program. Applicable regulatory standards for water quality are included as Appendix E. Photographs taken at the HTPS facility during the audit are included as Appendix F.

This audit report provides the information required to conduct a PP/WM and water conservation feasibility study of the thermal electric power industry in Jordan, using the HTPS as the basis. The findings of the PP/WM and water conservation audit conducted on the HTPS are presented herein.

11

2.0 PROCESS AND FACILITY DESCRIPTION

2.1 General

The Al Hussein Thermal Power Station began operation in 1975. The facility contains housing for approximately 300 people, a substation for transmitting electricity, seven power generating units, fuel storage tank farm, water storage area, workshop area, wastewater tanks, pumping stations, irrigation area and a wastewater treatment and holding area (Figure 1).

The facility generates 350 MW of electricity. The HTPS uses fuel oil as the energy source to generate steam (Figure 2). The facility has a total of seven units, each with its own turbine for power generation. Usually all seven units are in operation and generate power.

The HTPS uses No. 4 fuel oil (approximately 2,000 t/day) as its energy source for the boilers. The HTPS receives fuel oil directly from the Jordan Petroleum Refinery Company (JPRC). The fuel oil has a caloric value of 10,600 Kcal/kg and incidentally, a high sulfur content of 3.6%. The fuel oil is stored in 12 primary storage tanks such that 35,000 tons of fuel oil are usually in reserve.

2.2 Facility Description

The HTPS is located southeast of the town of El Hashimiya and 3 km northeast of Zarqa. The HTPS is 1 km to the east of the JPRC and 6 km to the southwest of As Samra Wastewater Treatment Plant. The HTPS was constructed and upgraded during the years 1973 to 1984. It is on 35 acres of land, which includes an area of trees and vegetation irrigated by facility wastewater. Figure 1 illustrates the main production facilities, oil storage facilities and buildings associated with the HTPS. Photographs taken at the HTPS during the audit are presented in Appendix G.

All of the water needs for the HTPS and the living quarters (300 people) are satisfied by groundwater (130 m^3/h) obtained from an underlying aquifer.

2.3 Power Generation Process

The HTPS has a total of seven oil-fired steam turbine power generating units having a rated capacity of 363 MW of electric power. Four large units each have a generating capacity of 66 MW with a boiler pressure of 90 kg/cm^2, a boiler temperature of 510° C and a rate of steam generation of 300 t/h/unit. Three superheaters are associated with these units. Three smaller units each have a 33 MW capacity with a boiler pressure of 60 kg/cm^2, a boiler temperature of 482° C and generates steam at a rate of 160 t/h/unit. There are two superheaters associated with these units. In addition to the seven primary power generating units, there are two backup diesel-fired generators each having a capacity of 32 MW. These units, however, are generally used as backup in emergencies.

- 12

The steam-condensate-feed water cycle (Figure 3) is similar for all the steam turbine generating units. The steam generators are pressurized furnace, water tube, natural circulation units. Other components of the steam cycle include: steam coil air pre-heaters, Ljungstrom type air heaters, controls, and soot blowers. The turbine generators are single casing, condensing type machines designed with five extraction points for feed water heating. Each turbine is equipped with a direct generator and exciter.

Most of the cooling is performed using closed loop air cooled systems. Plant wide, about 50 large fans continuously blow air over elements to cool the water flowing through the cooling system. In addition, there are two water cooling towers used for handling the water used to cool the pumps located throughout the facility.

The power generation process includes the following support systems:

- Plant Air Systems;
- Closed Bearing Cooling Water Systems;
- Turbine Lube Oil Systems;
- Fuel Oil Systems;
- Water Demineralizing System Using Reverse Osmosis (RO) and Ion Exchange (IX);
- Boiler Chemical Feed System Including Amine, Hydrazine, and Phosphate Injection for Treating Boiler Water; and
- Auxiliary Boiler Steam System.

2.4 Environmental Regulations and Guidelines

Jordan currently has no comprehensive law to control water, air and soil pollution. However, industrial wastewater discharges are regulated by the Jordanian Standard 202 adopted in 1981 by the Department of Standards and Specifications and revised in 1990. Standard 202 regulates industrial wastewater discharges to rivers, wadis, groundwater, the sea and reuse for irrigation.

Drinking water quality is regulated by Jordanian Standard 286. Moreover, it is a common practice to use the Food and Agriculture Organization (FAO) guidelines as a reference.

Appendix E includes further discussion and summary tables of these regulations and guidelines. The WAJ monitors the wastewater discharged to the sewer on a monthly basis. Past monitoring data for 1994 are presented in Table 1.

13

3.0 AUDIT PROCESS

The objective of the audit was to identify the potential for PP/WM, wastewater cleanup and opportunities for water conservation appropriate for the HTPS. The following subtasks were undertaken to complete the audit:

- Audit Coordination;
- PP/WM Background Material Report;
- Pre-Inspection Meeting;
- Audit;
- Post-Inspection Meeting; and
- Audit Evaluation Report.

The activities conducted under each of the subtasks are briefly described below.

3.1 Audit Coordination

The Chamber informed the HTPS about the intent and schedule of the audit. An audit questionnaire specifically developed for this PP/WM project (Appendix B) was forwarded to the HTPS prior to the audit visit. Responses to the audit questionnaire were completed prior to the audit visit. The HTPS was also requested to furnish an overall water balance, process description and facility layout. The HTPS staff furnished the audit team the following support data prior to conducting the site inspection:

- Drainage Plan;
- Well Water and Fuel Oil Supply Piping Plans, Sections and Details;
- Out-door Plumbing System Drawing;
- Wastewater Holding Tank Layout;
- Groundwater Flow Plan; and
- Schematics of the Process and Water Balance.

Copies of these items are included in Appendix C.

3.2 PP/WM Background Material Report

The objective of the Background Material Report was to identify the currently available techniques and "state-of-the-art" technologies being practiced for PP/WM and water conservation by other thermal electric power plants elsewhere in the world. Harza, the lead American consultant, achieved this objective by performing a comprehensive literature review in preparation for the audit in Jordan.

The literature review included PP/WM related articles and conference proceedings, and books on pollution types and controls. In addition to the literature review, in-house technical expertise contributed to the content of this report. Based upon the facility operation information that was

14

made available to the audit team and information gathered through available literature, Harza prepared the Background Material Report (Appendix D). The report included general information on the thermal electric power industry as well as available information on the process used by the HTPS.

Harza also prepared a report including appropriate reference material gathered during the literature search. This report, submitted separately, contains processes and waste management practices used in similar facilities, primarily in the US.

3.3 Pre-Inspection Meeting

The HTPS facility audit, including the pre-inspection meeting, was conducted on October 29, 1994. The initial audit team consisted of the following personnel:

Dr. Usama H. Mudallal	Chamber of Industry
Eng. Rania Abdul Khaleq	Ministry of Water and Irrigation
Eng. Nabeel Hijazeen	Water Authority of Jordan
Dr. Shawn Niaki	Program Director, DAI (Harza)
Dr. Jeffrey Cline	Lead American Consultant (Harza)
Dr. Riyad Musa	Local Consultant (RSS)
Eng. Rafat Assi	Local Consultant (RSS)

The representatives of the HTPS facility included:

Eng. Rashid Al-Tineh	HTPS Manager
Eng. Safi Al-Ali	Operation Section Head
Eng. Faisal Hamid	Chemical Section Head
Eng. Nabil Abu-Zeid	Statistics and Studies Section
Eng. Mustafa Al-Tamimi	Deputy Operation Section Head

The pre-inspection meeting was held at the HTPS on October 29, 1994. The intent of this meeting was to inform the HTPS staff about the objective of the audit and also for HTPS staff to present information regarding process details as they relate to fresh water utilization, wastewater generation, wastewater treatment and disposal, water recycling and reuse and the overall water management at the facility. The audit team explained the purpose of the audit to the HTPS personnel. The HTPS staff responded with a concise process description, adding their major environmental and health concerns.

3.4 Audit

The facility audit was conducted on October 29 and 31, 1994. The HTPS facility designated Eng. Faisal Hamid and Eng. Nabil Abu-Zeid to accompany the audit team. The HTPS representatives and audit team toured and inspected the facility including the water supply wells, water treatment systems, wastewater holding tank, oil/water separator, fuel storage tanks, fire

15

house, cooling towers, steam generators, irrigation area and the process control room.

Upon completion of the facility tour, discussion continued on the overall water usage and wastewater management practices currently employed. Some of the specific details, however, remained unanswered.

Dr. Jeffrey Cline, Dr. Riyad Musa, and Eng. Rania Abdel Khaleq visited the facility on October 31, 1994. During the visit, a follow-up questionnaire (Appendix B) was furnished to help answer questions and resolve data gaps, if possible.

Dr. Riyad Musa visited the facility again on November 5 and 12, 1994. During these two visits, additional data gaps were resolved and the plant engineers offered comments on the audit team's initial thoughts for PP/WM and water conservation. The plant engineers stated that they recognized PP/WM and water conservation opportunities with respect to vented steam, boiler water blowdown and the sampling panel.

3.5 Post-Inspection Meeting

The post-inspection meeting was held on October 31, 1994. The HTPS staff and audit team members reviewed and discussed the preliminary impressions regarding PP/WM and water conservation opportunities at the facility. The HTPS staff were responsive to the audit team's requests and agreed to help with any additional data gathering requests.

16

4.0 AUDIT F...INGS

The information collected during the facility audit through personnel interviews, discussion... th HTPS staff, visual observations, and technical data provided by HTPS staff was compiled and thoroughly reviewed. Our findings are presented below.

4.1 Overall Water Usage and Balance

Water used in the facility is derived entirely from groundwater pumped from five functional water supply wells. The water wells supply a total of approximately 130 m^3/h of water to the facility. A water meter is installed on each well to monitor water pumping rates.

Groundwater is pumped from the water supply wells to a large above ground storage tank with a capacity of 3,700 m^3. From the storage tank, water is pumped to a 43 meter high water tower to primarily satisfy facility water requirements. Additionally, water used for fire fighting is obtained from the water tower on an as needed basis. The fire water is not a continuous water consuming source and therefore is not discussed as part of the overall water balance.

A schematic detailing the overall water balance for HTPS is provided on Figure 4 and is summarized in Table 2. Figure 4 is not intended to reflect actual pipe routings or physical locations of facilities, rather, it categorizes water consuming activities into general groups. For the purposes of this discussion, the HTPS water usage is separated into three main categories. They are:

- Process Water;
- Cooling Water; and
- Domestic Water.

These three main water consuming sources are discussed below.

4.1.1 Process Water

Process water is used at a rate of approximately 70 m^3/h, equivalent to 54% of the total HTPS water use. Process water is primarily used for the following:

- Steam Production; and
- Process Support Systems

Raw groundwater is pumped to the water treatment system at a rate of approximately 70 m^3/h to produce boiler feed water. Water treatment consists of a 3-stage system; sand and carbon filtration followed by reverse osmosis (RO) and ion exchange (IX). Of the 70 m^3/h water input, 20 m^3/h is lost as RO rejects and 10 m^3/h as IX regenerant water. The remaining 40 m^3/h is used for steam production and process support systems, which are discussed below.

17

Steam Production: The steam generation cycle (Figure 3) uses approximately 19 m^3/h of treated water as boiler feed water. Some of the waste steam from the boilers is collected by a condenser. From the condenser it is pumped to low pressure heaters, a de-aerator to remove oxygen (hydrazine added), high pressure heaters, an economizer and finally returned to the boilers.

Process Support Systems: As illustrated on Figure 4, process support systems consume water at an approximate rate of 21 m^3/h. Process support systems include:

- Sampling Panel - monitoring the conductivity of boiler feed water (5 m^3/h);
- Soot Blowing - removal of fly ash from stacks (4 m^3/h);
- Auxiliary Blowers (5 m^3/h);
- Bearing Cooling - cooling of pump bearings (1 m^3/h); and
- Fuel Atomizing - vaporizing fuel into an easily combusted form (6 m^3/h).

4.1.2 Cooling Water

The cooling system uses a total of approximately 25 m^3/h of raw well water, or 19% of the total HTPS water requirements. Approximately 20 m^3/h is lost due to evaporation and 5 m^3/h is discharged as cooling water blowdown. Cooling water makeup is currently obtained directly from the groundwater supply wells.

4.1.3 Domestic Uses

The total domestic water consumption rate is approximately 35 m^3/h, or 27% of the total HTPS water requirements. Engineering/military housing and the workshop/training center are estimated to consume water at an estimated rate of 10 m^3/h. The HTPS plant personnel consume 10 m^3/h. Approximately 15 m^3/h is assumed to be consumed by leaks, spills and washdowns. This water use has been included with domestic water uses solely for the purpose of discussing the overall water balance.

4.2 Wastewater Sources and Discharges

4.2.1 Wastewater Sources

The following wastewater sources were identified:

- RO Reject;
- IX Regenerant;
- Boiler Blowdown;
- Process Support System Wastes;
- Cooling Water Blowdown;
- Domestic Wastewater; and
- Spills and Leaks, Washdowns.

18

RO Reject: RO reject is generated at a rate of approximately 20 m^3/h, which is discharged to a holding tank and ultimately discharged either to the As Samra Wastewater Treatment Plant or used for irrigation. The RO reject is characterized as a high TDS wastewater (12,600 mg/l) which has a conductivity of 10,000 to 40,000 μS/cm. The calculated TDS contribution from Reverse Osmosis is estimated to be approximately 6,400 kg/d.

IX Regenerant: IX regenerant is produced at an approximate rate of 10 m^3/h. A 5% solution of NaOH is used to regenerate the anion exchanger and a 5% solution of HCl is used to regenerate the cation exchanger, which produce the high TDS wastewater. The calculated TDS contribution from Ion Exchange is estimated to be approximately 1,100 kg/d.

Boiler Blowdown: Boiler blowdown occurs on a continuous basis and is generated at a rate of 7 m^3/h and is discharged to the oil/water separator. The blowdown water is typically high in conductivity (10,000 to 40,000 μS/cm and has TDS concentrations of approximately 6 to 24 mg/l. Approximately 12 m^3/h of the remaining boiler makeup water is lost as vented steam.

Process Support System Wastes: Process support systems consume approximately 21 m^3/h of treated groundwater. Approximately 9 m^3/h is discharged from the sampling panel and soot blowing to the oil/water separator. The remaining 12 m^3/h from the auxiliary blowers, bearing cooling and fuel atomizing systems is lost to evaporation. Although wastewater discharges are not monitored, wastewater from the sampling panel is considered to be low in conductivity and TDS and soot blowing wastewater likely contains high levels of solids.

Cooling Water Blowdown: Cooling Water Blowdown is generated at a rate of approximately 5 m^3/h and is sent to the oil/water separator. Cooling water makeup is generally high in TDS (2,200 mg/l). The blowdown is concentrated due to evaporation losses to approximately 4,000 mg/l. The calculated TDS discharge to the oil/water separator is approximately 480 kg/day. Approximately 20 m^3/h is lost to evaporation.

Domestic Wastewater: Approximately 20 m^3/h of domestic wastewater is discharged directly to the As Samra Wastewater Treatment Plant. Losses to irrigation, evaporation and spills are estimated to be approximately 15 m^3/h.

Miscellaneous, Spills and Leaks, Washdowns: Additional wastewater (480 m^3/cleanup) is generated when the boilers, pre-heat tubes and turbine systems are cleaned about once per year. A weak hydrochloric acid solution (with detergent) is used for cleaning. This wastewater is sent to the oil/water separator before it is sent to the wastewater treatment plant.

Water is lost due to spills, leaks and washdowns at an approximate rate of 15 m^3/h.

Leaks from chemical and oil tanks/piping were visually observed by the audit team in many areas of the HTPS. Spills from direct use containers appeared frequent and common. These leaks are cleaned up using wet washing techniques with the washwater being directed into the sewer. There were many locations where water was leaking from pumps, lines, etc. A continuous discharge was observed at a boiler water conductivity meter, which appeared to be a significant water loss that is discharged to the oil/water separator. In another location, significant water was leaking from piping directly onto the ground.

Filters are used to remove solids from the fuel oil before combustion. When these filters become dirty, they are washed and reused. This oily washwater is discharged to the oil/water separator.

General washdown and cleanup procedures in the plant are very simple and generate significant wastewater. Cold water is normally used to cleanup and soap is used to enhance cleaning. Oil spills are washed into the sewer. There was no evidence of steam cleaning. In addition, there were no flow controls on hoses used during cleaning.

4.2.2 Wastewater Discharges

All process wastewater is discharged to a large, underground concrete oil/water separator. About 10 to 12 bbl per week of oil is removed from the oil/water separator. The majority of process wastewater from the oil/water separator is pumped to the As Samra Wastewater Treatment Plant, along with the domestic wastewater. The volume of wastewater discharged to As Samra is estimated to be 71 m^3/h. The exact amount of process wastewater discharge to As Samra is not known due to the lack of monitoring of water consumption and wastewater discharge rates.

A small portion of the wastewater (10 m^3/h) is used for irrigation. Approximately 12 acres of trees are irrigated using process wastewater. Trees which have been receiving wastewater appeared to be dying in some instances.

The chemical makeup of the wastewater, some of which is used for irrigation, is monitored by the WAJ. Averaged analytical data obtained during 1994 wastewater monitoring is contained in Table 1.

Approximately 44 m^3/h of water is lost due to evaporation and about 5 m^3/h is estimated to be lost due to infiltration.

4.3 Storm Water

There is no storm water management program currently in place at the HTPS. All storm water is either collected by the surface drains, runs off the surface to the Wadi or infiltrates through the ground. The water that is collected by the sewer system flows to the oil/water separator and

is eventually discharged to the As Samra Wastewater Treatment Plant.

Fuel oil storage tanks are surrounded by earthen berms sufficient to contain a spill from a ruptured tank. However, there were no apparent drain systems and no apparent liners on the bottom of the tank containment areas. Therefore, any storm water trapped inside the containment areas can infiltrate into the soil along with any spilled oil.

4.4 Chemicals

There is significant chemical usage at the facility. All of the chemicals arrive in drums or smaller containers. Small storage tanks contain chemicals such as amine, hydrazine, phosphate, caustic soda and manganese oxide. The chemical storage tanks have no secondary containment to control spills. All spills and leaks drain directly into the ground. Several large bulk tanks are set up for injection of manganese into the boiler burners to control sulfur dioxide emissions. The manganese oxide arrives at the HTPS in 55 gal drums. Due to the significant use of manganese oxide, a large number of empty drums are located throughout the facility property. It is unknown whether there are PCB oils in the transformers located on-site.

4.5 Solid Waste

Solid wastes generated at the HTPS include domestic wastes, laboratory wastes, solids from the plant, such as scrap metal, and paint wastes. All solid wastes, except for scrap metal, are apparently shipped to the local domestic landfill for disposal.

During the site inspection, there were piles of solid wastes observed in the back area of the plant next to the irrigation area. The waste materials were placed on the ground surface and included steel tubing, batteries, steel drums (over 1,000), scrap steel, scrap wood, stone and concrete rubble. The steel and batteries are apparently recycled occasionally. In 1994, 576 empty steel drums were sent to a local steel plant for recycling.

In addition, fly ash generated during the combustion process is collected in drums and disposed of at the domestic waste landfill at a rate of 40 bbl/year. The fly ash may contain leachable heavy metals and should be handled safely. Other solid wastes such as laboratory wastes, paint wastes, PCBs, and aerosols are all typically generated at an electric power plant and may represent a potential environmental hazard.

4.6 Air Emissions

Air emissions at the facility are not measured or monitored. However, three air emissions are expected to be present. They are:

- Sulfur Dioxide;
- Steam; and
- Nitrous Oxide.

21'

Sulfur Dioxide: Sulfur Dioxide is generated by burning No. 4 fuel oil in facility boilers. The No. 4 fuel oil is black in appearance, similar in nature to many crude oils, and has an average sulfur content of approximately 3.6 percent. Based upon the consumption rate of fuel oil, sulfur emissions are estimated at 72 t/day. The sulfur odor was constantly detected by the audit team during the site inspection. The sulfur emissions are not controlled, except partially by the addition of powdered Manganese Oxide to the fuel oil prior to combustion. The Manganese Oxide reacts with the Sulfur Dioxide to produce Manganese Sulfate and thereby reduce Sulfur Dioxide emissions.

Apparently, the sulfur emissions create a human health nuisance (neighbor and worker complaints) and a health hazard at the plant. Reportedly, plant operators at times cannot go up onto the boiler stack due to high concentrations of sulfur dioxide.

Steam: There is a large steam emission associated with each boiler. The quantity of vented steam is equivalent to 12 m^3/hr of water.

Nitrous Oxide: Nitrous Oxide emissions are also suspected and are likely to be significant. The emissions appear usually as white smoke.

During the audit, black smoke was observed blowing from one of the stacks for about 5 minutes. This was apparently incomplete combustion due to a temporary lack of oxygen.

4.7 Data Gaps

Data gaps exist with respect to water quality and quantity. The data gaps include:

- Process Water Inflow;
- Cooling Water Inflow;
- Domestic Water Inflow;
- Water Treatment Plant Effluent;
- Boiler Blowdown;
- Process Support Systems Effluent;
- Domestic Wastewater Effluent;
- Effluent to the As Samra Wastewater Treatment Plant; and
- Effluent to Irrigation.

Other data gaps include:

- Air Emissions Data;
- Quantity and Quality of Waste Oils, Domestic Solid Wastes and Scrap Metal.

Although data gaps exist for water quality and quantity, HTPS personnel provided educated estimates based upon their understanding of the process, familiarity with process capacities and water consumption, and current operation levels to develop water and material balances.

5.0 POLLUTION PREVENTION AND WASTE MINIMIZATION POTENTIAL

5.1 General

The HTPS was chosen for this PP/WM study due to its large consumption of groundwater and its high TDS discharge to the As Samra Wastewater Treatment Plant and to irrigation. Wastewater is being generated in Zarqa basin at a rate far above the treatment capacity of the As Samra Wastewater Treatment Plant, which has a design capacity of 2,800 m^3/h and a current average inflow rate of 5,200 m^3/h . The HTPS contributes about 1.3% of the inflow or approximately 71 m^3/h . This wastewater contains high TDS concentrations from RO reject, IX regenerant and various treatment chemicals. The dissolved solids will persist through the As Samra Wastewater Treatment Plant to the final discharge receiving body, the King Talal Reservoir.

The wastewater discharge from the HTPS is regulated by the Jordanian Standard 202, presented in Appendix E. Effluent data collected during the 1994 WAJ wastewater discharge monthly monitoring (Table 1), indicates that averaged monthly contaminant levels are below the Jordanian Standard 202 levels for wastewater discharged to the sewer. However, given the increase in TDS levels in groundwater over time (Table 3), the HTPS discharge in excess of the Jordanian Standard 202 will become more common place, if operations remain the same.

5.2 Wastewater

During this audit, opportunities to reduce the TDS discharge, as well as other pollutants, from the HTPS have been identified. Suggested PP/WM opportunities are discussed below.

5.2.1 Cooling Water

The cooling water for most of the facility is a closed system in which fans are used to air cool the elements and no associated water losses occur. However, two cooling towers are used to cool pump-cooling water. The use of the cooling towers results in evaporative losses (20 m^3/h) and blowdown (5 m^3/h). The rate at which blowdown occurs is proportional to the initial TDS concentration of the cooling water. Therefore, initial TDS concentration in raw groundwater (2,200 mg/l) and temperatures of air and water may affect evaporative losses and the number of cooling cycles before blowdown occurs. Cooling water blowdown can be minimized by several methods:

- Pretreatment of Cooling Makeup Water by RO and/or Cold Lime Softening;
- Substitution by a Closed-Loop Heat Exchange; and
- On-site Treatment and Reuse.

<u>RO and/or Cold Lime Softening Technology</u>: RO and/or cold lime softening technology could be applied to the incoming feed water to decrease the initial TDS and hardness concentrations, permitting more water cycles before blowdown is necessary. For

23

example, reducing makeup water TDS concentrations and hardness can increase the water cycles from 4 to 8, thereby decreasing the blowdown rate by 50 percent, while maintaining the same blowdown TDS concentration. However, such pretreatment may generate RO reject and softening sludge which would require disposal. Additionally, chemical costs will also increase.

Closed-Loop Heat Exchanger: The feasibility of substituting direct contact cooling towers with a non-contact type heat exchanger using air cooling should be explored.

On-site Treatment: Cooling water blowdown could be treated and reused. This alternative is in lieu of the pretreatment option.

5.2.2 RO Reject/IX Regenerant Wastewater

RO and IX wastewater contribute as much as 7,500 kg/day of TDS to the overall wastewater discharge of the facility. The majority of this wastewater is discharged to the As Samra Wastewater Treatment Plant, however, the TDS persists through the treatment process and are ultimately discharged to the environment.

The HTPS intermittently uses this wastewater for irrigation of a forested area located on HTPS property. High TDS concentrations in the wastewater may have some impact on the dead trees observed during the site inspection. In this desert environment, irrigation water will evaporate from the soil surface resulting in a buildup of salts in the soil. During periods of rain, these salts can infiltrate through soils and result in an increase in TDS concentrations in groundwater. Therefore, the practice of using wastewater for irrigation purposes needs careful evaluation.

Several PP/WM opportunities for RO reject and IX regenerant are:

- Increasing treatment efficiency to minimize high TDS wastewater generation;
- Using alternative technologies to reduce/eliminate TDS concentrations; and
- Using proper disposal methods to manage the brine.

Treatment Efficiency: The RO reject quantity (20 m^3/h) seems excessive for the inflow of 70 m^3/h. By carefully reviewing and optimizing the RO operation by installing proper membranes, the reject flow may be reduced to approximately 11 to 14 m^3/h. In addition, there are alternatives to minimize the volume of RO reject and IX regenerant wastes, such as the use of alternative technologies. One such alternative technology to reduce the volume or RO reject and IX regenerant is electrodialysis. An electrodialysis module may be added to reduce the volume of wastewater but with higher TDS. This technology is capital intensive, but requires low maintenance.

Alternative Technologies: Alternatively, the TDS concentration can be minimized in IX regenerant by using alternative technologies which minimize or eliminate the use of regeneration chemicals. Such technologies include:

Electrodeionization: This system is a combination of IX and electrodialysis and is often used as a replacement for IX. The system contains an IX resin with an electric field applied across it to remove ions on a continuous basis and is capable of producing high purity water. The system has an advantage over IX by elimination of the use of regeneration chemicals (sodium hydroxide and hydrochloric acid). US Filters located in Rockford, Illinois (US) is now marketing a new electrodeionization process called IONPURE.

New IX Resins and Regenerating Chemicals: A series of ion-exchange resins have been developed to improve demineralization, improve performance and reduce chemical use in IX modules. The resins are characterized by excellent physical strength as well as high capacity and regeneration efficiency. These resins could potentially reduce chemical usage and TDS loading. With these resins, the current practice of using HCl and NaOH for regeneration can be substituted with more environmentally friendly chemicals like acetic acid and ammonium hydroxide. Sybron Chemicals of Birmingham, New Jersey (US) has developed such resins.

New IX Systems: New compact IX systems have been introduced into the market which require less chemicals and generate less regenerant wastewater. ECOTECH and Canota have developed such a system. HTPS should explore the feasibility of installing such as a system.

5.2.3 Brine Disposal

PP/WM opportunities exist by implementing proper methods for brine (RO reject and IX regenerant wastewater) management. The practice of using brine for irrigation can be eliminated and all brine wastewater can be managed by one of the following methods:

Pond Evaporation: Brine can be discharged to engineered lined, shallow ponds where natural evaporation concentrates them. Following evaporation, the remaining salts are transported off-site for disposal at a permitted, well designed solid waste management facility.

Thermal Brine Concentrating Evaporators (Water Distillation Units): Water distillation units are being used increasingly to concentrate high TDS wastewater. Evaporation involves application of waste heat derived from facility processes to evaporate the water and leave behind the concentrate. The concentrates can be transported to evaporation ponds for final disposal. These units have the added advantage in that the condensed evaporated water can be condensed and reused as high quality water.

25

5.2.4 Washdowns/Floor Drains

Washdowns can generate large quantities of wastewater. Cleaning is often performed with fresh water containing soaps and detergents. These soaps and detergents carry dirt and oils into the sewer and to the As Samra Wastewater Treatment Plant. The following PP/WM opportunities may reduce the volume of wastewater generated due to washdowns:

- Substitute pressurized steam cleaning methods for existing washdown techniques. Pressurized steam will effectively clean oily surfaces and perform cleaning at lower water consumption rates;

- Use dry vacuum techniques to clean up chemical and oil spills instead of washing them down the drain;

- Use timer controlled valves for controlling washwater. This will help control the amount of water used for each washing.

- Utilize water saving equipment as much as possible. Different types of water saving equipment include:

  Flow regulation Devices. When these devices are inserted into a water line, increasing pressure restricts flow to a constant needed rate.

  Flow Shut-Off Devices. The most useful devices are finger operated shut-off valves, or guns with nozzles on the ends of cleanup hoses. When finger pressure is released, water flow stops.

  Nozzles. Nozzles use less water than drilled pipe sprays. For faster, more efficient cleaning, a "Vee" type nozzle is preferred.

  Overflow Preventors. These devices are employed to prevent overflowing of containers, tanks, or reservoirs, thus minimizing spills.

- Minimize oily wastewater by discarding oil filters rather than washing them for reuse.

- Perform washdowns on an as-needed basis.

- Improve housekeeping by developing and implementing operating protocols.

5.2.5 Spills and Leaks

The following PP/WM opportunities exist to reduce wastewater resulting from spills and leaks:

- Improve housekeeping by establishing good operating protocols and procedures;
- Develop and implement efficient spill prevention, control and counter measure programs, to minimize the incidence of spills and leaks;
- Purchase chemicals in bulk tanks to minimize the use of small containers from which frequent spills can occur;
- Construct dikes around chemical tanks, drums and injection systems to contain spills which can be vacuum cleaned or adsorbed and disposed;
- Install an impermeable liner around the oil storage tanks and install a drain system to manage storm water collected inside the containment areas. Collected water will need to be chemically analyzed prior to disposal or reuse;
- Install double walled oil storage tanks and pipe lines;
- Dispose contaminated soils resulting from chemical and oil spills by off-site transportation to a hazardous waste management facility, if available, or to an on-site facility designed and designated to store such wastes; and
- Recycle spilled oil with waste lube oils. These waste oils can be sold to an oil recycling company or the JPRC.

5.2.6 Boiler Tube and Turbine Cleaning Wastewater

At present, the boiler tube and turbine cleaning wastewater (480 m^3 per event) is treated through the oil/water separator. This wastewater, which commonly contains high levels of dissolved metals and suspended solids, requires a more extensive treatment process. Such additional treatment consists of equalization, coagulation, hydroxide precipitation, neutralization, and filtration. Following this treatment process, the treated water can be reused for floor washing prior to being discharged to the As Samra Wastewater Treatment Plant.

5.2.7 Domestic Wastewater

Domestic wastewater is generated from housing, workshop areas and the training center

21

at an estimated rate of approximately 20 m^3/h. This seems excessively high considering the wastewater is generated from a community of approximately 300 people. In the US, the water consumption per capita is approximately 100 gallons per day (0.016 $m^3/h/capita$). The resulting wastewater, assuming 80% water consumption, is about 0.013 $m^3/day/capita$. Based upon this rate, the total domestic flow from the 300 domestic water users at the HTPS is expected to be about 92 m^3/day or 3.84 m^3/h. If the figure of 20 m^3/h is assumed to be accurate, the domestic water consumption is approximately 5 to 6 times higher than what is normally anticipated. Therefore, a 50 percent reduction in domestic wastewater appears to be a reasonable expectation.

To control water use, meters should be installed for all water users to identify excessive water users. The water use can be minimized using aerated shower heads, that control water flow but provide the same pleasure of high water flow shower heads. Toilets can be modified to control the flush water volume by providing a partition and adjusting the float height. Drip or trickle irrigation techniques can be used to irrigate gardens. All plumbing, faucets and other outlets can be checked routinely and repaired to prevent leaky pipes, valves and faucets.

The HTPS could install an on-site wastewater treatment plant to treat all domestic and process wastewater. The treated wastewater can then be reused as makeup water for cooling, thus completely eliminating discharge to the As Samra Wastewater Treatment Plant and use for irrigation.

5.2.8 Process Support Systems

Wastewater is generated through a series of small secondary processes but, cumulatively contribute to significant water consumption. These secondary water consumption areas include: sampling panel (5 m^3/h), soot blowing (4 m^3/h), auxiliary boilers (5 m^3/h), bearing cooling water (1 m^3/h), and fuel atomizing (7 m^3/hr).

The following PP/WM opportunities exist:

- Soot blowing may be done with high pressure air or alternatively with vacuums.
- Reduce sample water consumption allowing flow only when a measurement is taken.

5.2.9 Storm Water

The HTPS currently has no storm water management systems. The storm water may potentially contain oil, residual chemicals, and other contaminants resulting from spills and leaks.

During a storm event, all the surface water that enters the surface sewers is ultimately directed to the wastewater treatment facility. The storm water that is not collected by the sewer system runs off into the Wadi. This water may ultimately reach the King Talal reservoir and recharge the regional groundwater. In either case, potentially contaminated storm water discharge can cause problems for water users locally as well downstream.

To prevent pollution resulting from storm water runoff, it should be collected, treated and reused in the facility. The facility area can be properly graded and stormwater can be directed through ditches to detention ponds. Storm water detention ponds can be constructed to collect the storm water for use as process water. Storm water can be held in the detention ponds until the water is required. The feasibility of implementing such a plan should be evaluated against the low rainfall (15-24 cm/year) and the capital costs to construct the piping systems, storage ponds and treatment facilities.

5.3 Solid Wastes

There is potential for improvement to the solid waste management practices currently used by the HTPS. Recycling, storage and disposal practices can be improved. The following PP/WM opportunities exist to reduce solid waste:

- Waste Segregation and Recycling; and
- Waste Classification and Controlled Disposal.

Waste Segregation and Recycling: Domestic solid wastes such as paper, aluminum cans and bottles can be segregated and recycled instead of landfilled.

Waste Classification and Disposal: Wastes can be safely separated as hazardous and non-hazardous wastes and disposed of separately based upon the potential impact that these wastes may have to the environment. If no suitable hazardous waste disposal facility exists in Jordan, the hazardous wastes can be either appropriately stored on-site or exported to a suitable disposal facility.

5.4 Air Emissions

Although air emissions were not the focus of this study, several emissions were observed during the audit. The current calculated emissions of 72 kg/day of sulfur gases results in a strong, pungent SO_2 odor. To date however, there have not been any measurements of the air emissions. The following PP/WM opportunities exist to reduce sulfur emissions:

- Use of Low Sulfur Fuels;
- Application of Alternative Technologies; and
- Use of Process Control.

Low Sulfur Fuel: Use low sulfur fuel oil as fuel for the boilers. If possible desulfurized fuel may be obtained from the refinery before shipment.

Alternative Technologies: Sulfur emissions are generally controlled by flue gas desulfurization and filtration (lime scrubbing) to remove particulates. However, due to the significant amount of wastes generated during these processes, magnesium-enhanced scrubbing, dry scrubbing and selective catalytic reduction are emerging as potential and cost effective alternatives to traditional treatment methods.

In some systems, the typical lime scrubber may be replaced by a magnesium enhanced lime scrubber system which is more efficient and requires less water. Additionally, there are certain additives which may be added to the system to enhance NO_x removal as well as the SO_2 removal, but at a higher cost.

Two other technologies with good potential for combined SO_2 and NO_x removal are Dry Scrubbing and Selective Catalytic Reduction. The latter is of particular interest because it reduces air emissions while producing a commercial grade sulfuric acid which is marketable.

Process Controls: Computer based process management systems are now emerging which can help plant operators balance heat rate with emissions. Electric Power Research Institute, for example, has developed a software package called Advisory Plant and Environmental Control. This program assists plant operators to control fuel quality, heat rate, SO_2 and NO_x emissions, and waste generation. Similar programs have enabled plants to reduce emissions an additional 27% beyond standard pollution controls.

5.5 Summary of PP/WM Measures

The recommended PP/WM options could eliminate 100 percent of the discharge to the As Samra facility and that for irrigation.

6.0 WATER CONSERVATION POTENTIAL

6.1 General

This section presents potential water conservation opportunities at the HTPS. Such opportunities exist with respect to blowdown systems, water treatment systems, alternative water sources, alternative technologies and general process improvements and optimization.

It will be important as a next step to weigh the benefits and associated costs together with environmental and human health considerations. For example, any water conservation measure that results in a cost or water savings and also prevents pollution from occurring, should be implemented first. Engineering studies will need to be performed on any of these concepts to determine their feasibility prior to implementation. The basis for this discussion is the overall water balance of HTPS, depicted in the schematic shown in Figure 4.

6.2 Alternative Processes

The following alternative processes have water conservation benefits:

6.2.1 Air Cooling Systems

With the current cooling system, the Stage I and Stage II cooling towers lose water at a rate of about 20 m^3/h due to evaporation. Cooling towers could potentially be replaced with a forced air cooling system. With such a conversion, cooling tower evaporation losses can be eliminated.

6.2.2 Combination Steam/Gas Driven Generators

Combination steam/gas driven power generator systems are being developed that are more efficient than conventional steam driven turbines. In this system, high temperature exhaust from the gas turbines produce steam which is used in a heat recovery steam generator. The combination system is reported to require less water and is discussed further in Appendix D, the Background Material Report.

6.3 Vented Steam

Steam is continuously vented from the boiler blowdown resulting in an equivalent water loss of 12 m^3/h. Vented steam can be readily condensed and the water returned to the process. This condensed water would be essentially ion free and could be used directly as process water without undergoing treatment. The heat released during condensing can be recovered and reused, if feasible.

31

6.4 Process Support Systems

About 30 percent reduction in water consumption in this area appears to be possible if the following PP/WM measures are implemented:

- Completely recycle and reuse sampling panel water;
- Perform fuel atomization by mechanical means; and
- Reduce auxiliary boiler water needs by process optimization.

6.5 Process Wastewater

Significant water conservation can potentially be achieved simply by recycling process wastewaters. Opportunities for water conservation exist with respect to boiler water blowdown, cooling water blowdown and pretreatment of process water, as discussed below.

6.5.1 Boiler Water Blowdown

Boiler water blowdown is currently generated at a rate of 7 m^3/h and is lost as discharge to the As Samra Wastewater Treatment Plant and/or to irrigation. This water has low TDS concentrations (6 to 24 mg/l) compared to water obtained from the groundwater supply wells (2,200 mg/l). Untreated boiler blowdown can therefore be recycled for use in any process. The blowdown water could be recycled through the water treatment plant, to be used again for boiler feed water. Alternatively, this water can be used directly (without treatment) as cooling water makeup, washdown water or fire water.

6.5.2 Cooling Water Blowdown

Cooling water blowdown is generated at a rate of 5 m^3/h. This water can be recycled. Direct uses of cooling water blowdown include: bearing flush water, pump-seal water and should a sulfur scrubber be installed, the blowdown water can be used as demisting water for the flue gas desulfurization scrubbers.

6.5.3 Water Treatment

Implementing PP/WM opportunities as discussed in Sections 5.2.1 and 5.2.2 for RO reject, IX regenerant and cooling tower blowdown could result in conserving approximately 11 m^3/h of water.

6.6 Washdowns

Implementing PP/WM opportunities as discussed in Section 5.2.4 could result in conserving about 7 m^3/h of water.

- 32

6.7 Boiler Tube Cleaning Wastewater

Boiler tube cleaning water, although generated only once per year, can be treated, recycled and reused.

6.8 Domestic Water

Domestic water uses need to be metered to identify specific areas of excessive water consumption. Once identified, water consumption reduction measures should be implemented as soon as practical. However, basic water conservation opportunities as discussed for PP/WM in Section 5.2.7, including the installation of aerated shower heads, drip sprinklers and water meters, will certainly provide a large degree of water conservation. However, by monitoring domestic water consumption, excessive water consumption areas can be identified and appropriate water conservation measures can be developed.

Additionally, opportunities exist for potential reuse of domestic wastewater. Power generating stations in arid regions in the US have used domestic wastewater as cooling water makeup. This is possible at the HTPS if an on-site domestic wastewater treatment system is constructed. Alternatively, the HTPS and the neighboring JPRC could construct a single shared treatment plant and recycle the treated water back to the process.

We estimate that with proper water usage, savings of 50% water consumption (10 m^3/h) can be obtained and by recycling this water an additional 1 m^3/h of fresh water can be saved.

6.9 Storm Water

By designing and constructing a drain system and collection ponds, storm water can be collected and used as process water or cooling water.

6.10 Process Optimization and Maintenance

Process optimization can be achieved through proper monitoring of process variables including: temperature, pressure, feed water quality, frequency of blowdown and frequency of regenerating ion-exchange resins. Proper application of optimum operating conditions could result in energy and water conservation. Process water consumption can be minimized by installing flow-control valves and timers to regulate water use in various processes. Water flow rates in and out of each process unit should be monitored to ensure controlled water consumption.

A properly instituted maintenance program encompassing preventative maintenance can conserve energy and water. The preventative maintenance should reduce leak occurrences. It may be necessary to monitor critical water pressures and quantities in order to effectively detect leaks.

6.11 Conceptual Water Balance

PP/WM and water conservation solutions integrated into a single program will offer the greatest water savings. Using the current estimates for HTPS water usage (Figure 4), a proposed conceptual water management plan was developed (Figure 5). This scenario illustrates an approximate 56 percent reduction (57 m^3/h) in fresh water consumption by implementing the following PP/WM and water conservation opportunities:

- Use water saving equipment to reduce the volume of water used by the sampling panel;
- Use high pressure air for soot blowing instead of water;
- Use high pressure steam for fuel atomizing;
- Condense vented steam and recycle as process water;
- Recycle boiler blowdown;
- Minimize RO reject and IX regenerant by increasing treatment efficiency;
- Use water saving equipment to minimize losses due to washdowns, spills and leaks;
- Use alternative technologies to pretreat makeup cooling water; and
- Use water saving equipment to reduce domestic water consumption;
- Treat domestic and process wastewater and recycle as makeup cooling water;
- Treat and recycle stormwater; and
- Treat and recycle boiler tube and turbine cleaning wastewater.

Furthermore, the total HTPS water usage will be reduced to 98 m^3/h from 130 m^3/h (25 percent reduction). A summary of the projected water conservation for individual water consumers for this scenario is presented in Table 4.

This conceptual water balance illustrates a scenario which we believe is feasible and can be implemented with relatively low capital investment. However, it should be noted that this water balance is not the only possibility. Other possibilities may include PP/WM and water conservation opportunities which require relatively higher capital investment or may be relatively more difficult to implement. However, PP/WM and water conservation opportunities not included in this scenario should not be eliminated from consideration, as their feasibility can only be determined through more intensive study and evaluation.

7.0 CONCLUSIONS AND RECOMMENDATIONS

Water plays a critical role in the thermal electric power generation process. Approximately 54 percent (70 m^3/h) of the total water consumed (130 m^3/h) is used as process water for steam production. The remaining 46 percent (60 m^3/h) is used for equipment cooling, domestic uses and washdowns.

7.1 Conclusions

Based on the audit findings, the following conclusions were made:

1. Three main categories of water use at the HTPS are:

   - Process Water (70 m^3/h);
   - Cooling Water (25 m^3/h); and
   - Domestic Uses (35 m^3/h).

2. The main wastewater sources are:

   - RO Reject (20 m^3/h);
   - IX Regenerant (10 m^3/h);
   - Cooling Water Blowdown (5 m^3/h);
   - Boiler Blowdown (7 m^3/h);
   - Domestic Wastewater (20 m^3/h);
   - Washdowns, Spills and Leaks (15 m^3/h);
   - Soot Blowing Wastewater (4 m^3/h);
   - Sampling Panel Wastewater (5 m^3/h);
   - Storm Water; and
   - Boiler Tube Cleaning Wastewater.

3. High TDS wastewater is discharged without treatment to either the As Samra Wastewater Treatment Plant or is used for irrigation.

4. Information obtained regarding the characteristics of the wastewater used for irrigation and the observations made during the inspection of the irrigated area indicates that the wastewater is not suitable for irrigation purposes.

5. The HTPS has no storm water management program. Storm water runoff is discharged directly to the environment.

6. Measures to contain and prevent oil and chemical spills and leaks are generally inadequate.

7. Not all water quality and quantity parameters are monitored.

35

8. Air emissions are not monitored and for the most part are not controlled.

9. Several PP/WM opportunities exist at the HTPS facility. They are:

- Cooling water blowdown quantity can be reduced;
- RO rejects and IX regenerant wastewater volume can be reduced. The TDS concentrations in the wastes can be reduced through process optimization and alternative technology implementation;
- Concentrated brine can be contained, and subject to on-site evaporation with no off-site discharge;
- Washdowns, spills and leaks can be substantially reduced through improved housekeeping and planned water management;
- Domestic and process wastewater can be treated, recycled and reused. The volume of wastewater can be reduced through better management practices;
- Boiler tube cleaning wastewater can be treated, recycled and reused;
- Storm water can be collected and reused;
- Air emissions can be substantially reduced; and
- Solid wastes can be segregated and recycled.

10. Most PP/WM opportunities will also result in water conservation. In addition, water conservation can be achieved through recycling blowdown water, implementation of alternative processes, capture of vented steam, improved water management and process optimization, and treatment and recycling of all facility wastewater.

11. By implementing the suggested PP/WM and water conservation measures, total water usage can be reduced to 98 m^3/h (25 percent reduction), and fresh water usage can be reduced to 52 m^3/h (56 percent reduction).

7.2 Recommendations

1. Immediately initiate a wastewater monitoring program to determine the quality and quantity of wastewater discharged. The process wastewater should be monitored for oil and grease, suspended solids, pH, phenols, selected metals, total dissolved solids, and other parameters required by regulations. In addition, domestic wastewater should be monitored for biological oxygen demand, chemical oxygen demand, ammonia, and phosphate.

36

2. Minimize the volume of RO reject and IX regenerant wastewater. Consider the following:

   - Installing improved RO membranes;
   - Using alternative IX resins and regeneration chemicals;
   - Using alternative technologies such as dialysis or electrodeionization with the existing treatment system.
   - Replace the existing IX system with a more efficient system.

3. Contain and concentrate high TDS wastewater using pond evaporation. The final disposal should be a combination of evaporation and solids landfilling.

4. Minimize water losses from washdowns by implementing the following:

   - Substitute pressurized steam cleaning methods for existing washdown techniques;

   - Use dry vacuum techniques instead of washing spills down the drain;

   - Utilize water conservation equipment as much as possible including flow regulation devices, automatic shut off valves, timer control valves, nozzles and overflow preventors; and

   - Perform washdowns on a planned schedule with established protocols and procedures.

5. Minimize wastewater generation due to spills and leaks by implementing the following:

   - Improve housekeeping;

   - Develop and implement an efficient spill prevention, control and countermeasures program to minimize the incidence of spills and leaks; and

   - Provide secondary containment for piping and bulk chemical and oil storage tanks;

6. Reduce domestic water consumption and wastewater generation by performing the following:

   - Meter all water users to identify areas of excessive use;
   - Utilize flow control devices on shower heads and gardens;
   - Adjust float height in toilets to reduce flush volume; and
   - Inspect plumbing routinely and repair leaky pipes, valves and faucets.

7. Use high pressure air instead of water for soot blowing.

8. Use alternative methods for fuel atomizing which do not require water.

9. Develop and implement a storm water management policy. Storm water can be collected on-site with graded ponds to eliminate discharge to the Wadi and provide water for the process.

10. Design and install a boiler tube cleaning wastewater treatment system and recycle treated water.

11. Develop a policy to maximize the potential recycling for domestic solid wastes. Industrial solid wastes should be classified and disposed based upon their potential environmental impact. Therefore, consideration should be given to establishing proper methods of handling and disposal of hazardous wastes. The hazardous wastes could be classified using USEPA standards.

12. Consider a plan for reduction (99%) in SO_2 emissions by purchasing low sulfur fuel or installing SO_2 scrubbers.

13. The HTPS should develop an environmental management program to include:

    - Establishing an Environmental Department with dedicated personnel and sufficient resources;

    - Writing an environmental policy complete with missions, visions, goals, policies and a future work plan. PP/WM and water conservation goals need to be established to achieve the PP/WM program, in line with Ministry goals; and

    - Developing of training and incentive programs for all HTPS personnel.

14. Initiate a groundwater quality monitoring program. Observation wells or clusters should intercept underlying aquifers. We recommend that groundwater quality be monitored quarterly for the first two years and then bi-annually for the subsequent three years to identify any trends in groundwater quality.

15. Carefully monitor the use of high TDS wastewater for irrigation purposes.

16. Consider the following PP/WM items for feasibility level studies:

    - Optimization of RO, IX and cooling water processes;
    - Treatment and recycling of domestic and process wastewater and storm water;
    - Reduction of domestic water use; and
    - Implementation of a water monitoring and conservation plan.

7.3 Success Stories

Harza has developed wastewater management plans for fossil fuel and nuclear power stations. These projects include: 4 coal-fired, 2 oil-fired, 1 gas-fired and 6 nuclear power stations. In all of these projects Harza successfully designed and installed wastewater systems, complete with recycling and reuse capabilities, typically reducing water consumption by 70 to 90 percent.

8.0 FOLLOW-UP ACTIONS

This section contains our recommendation to the HTPS concerning follow-up action required to meet the objectives of the PP/WM and water conservation objective. Although PP/WM is generally given priority over water conservation, due to the limited water resources in Jordan, PP/WM and water conservation measures should be given equal importance. With this philosophy, the following actions are recommended in order of their priority.

1. Develop and implement a plan to monitor all wastewater flows by installing flow measuring devices and establishing sample collection procedures and protocols. All flows should be monitored monthly for a period of at least one year and quarterly thereafter. Discharge rates should be recorded daily.

2. Install flow monitoring devices at all key locations to monitor fresh water usage.

3. Study, evaluate and implement options recommended for PP/WM and water conservation. Set priority to items recommended for feasibility level studies.

4. Utilize water conservation equipment as much as possible such as flow regulation devices, automatic shut-off valves, nozzles and overflow preventors.

5. Reduce domestic water consumption by employee awareness and using water saving equipment.

6. Design and construct a boiler tube cleaning wastewater treatment system.

7. Develop a PP/WM and water conservation policy as part of the HTPS management operating philosophy and distribute it to all departments.

8. Implement a PP/WM and water conservation through the established goals and objectives.

9. Train employees to identify PP/WM and water conservation opportunities that relate to their job.

10. Designate a PP/WM and water conservation coordinator to implement the program.

11. Publicize success stories and reward employees that identify cost effective PP/WM opportunities.

12. Illustrate management efficiency by implementation of the above actions. Reinforce PP/WM policy through continued education at work and company functions.

13. Perform a periodic assessment of the PP/WM and water conservation program by key management personnel, the coordinator and independent experts.

14. Design and install groundwater monitoring wells, to determine if underlying aquifers are contaminated.

15. Review the groundwater monitoring results, if the data indicate groundwater contamination or increasing trends in contaminant levels, appropriate remedial actions should be undertaken.

16. Study, evaluate, design, and implement systems to reduce air pollution primarily due to SO_2 and NO_x.

41

TABLES

42

TABLE 1

ANALYTICAL DATA FOR WASTEWATER DISCHARGED TO AS SAMRA, 1994[1]

Parameter	Average Concentration (mg/l)[2]	Maximum Concentration (mg/l)[2]	Jordanian Regulatory Limits[3]			
			Discharge to Sanitary Sewer	Groundwater Recharge	Reuse for Irrigation	Disposal to Wadis
Biological Oxygen Demand	10	19	800	50M[4]	-	50M[4]
Chemical Oxygen Demand	46.5	105	2,100	150M[4]	-	150M[4]
Total Suspended Solids	27	51	1,100	-	100	50
Total Dissolved Solids	890	1040	-	1,500	2,000	3,000
pH	7.5	8.4	5.5-9.5	6.5-9.0	6.5-8.4	6.5-9.0
Ammonia	1.87	3.5	-	5	5	5
Phosphate	6.5	12	-	-	-	15
Methylene Blue Active Substances	0.05	0.95	26	15	-	25
Iron	0.23	0.81	50	1	5	1
Manganese	0.0033	0.01	10	0.2	0.2	0.2
Copper	0.0	0.0	4.5[5]	2	0.2	2
Zinc	0.2	0.3	15[5]	15	2	15
Chromium	0.05	0.16	5[5]	0.05	0.1	0.1
Cadmium	0.023	0.05	1[5]	0.02	0.01	0.01
Nickel	0.033	0.06	4[5]	0.1	0.2	0.2
Lead	0.073	0.22	0.65[5]	0.1	1	0.1

1 WAJ monthly averages
2 mg/l = milligrams per liter
3 Jordanian Standards 202
4 M = Monthly average
5 The total concentration of all noted compounds should not exceed 10 mg/l.
6 (-) = Not Determined

TABLE 2

HTPS WATER BALANCE

WATER INFLOW		WATER OUTFLOW	
Source	**Rate (m^3/h)**	**Use**	**Rate (m^3/h)**
Groundwater Wells	130	**Process Water**	
		Sampling Panel	5
		Soot Blowing	4
		Auxillary Boilers	5
		Bearing Cooling	1
		Fuel Atomizing	6
		Boiler Blowdown	7
		Vented Steam	12
		IX Regenerant	10
		RO Reject	20
		Cooling Water	
		Evaporative Losses	20
		Blowdown	5
		Domestic Uses	
		Washdowns, Spill, Leaks	15
		Domestic Water	20
Total	130		130

TABLE 3

GROUNDWATER QUALITY DATA

YEAR	1977	1979	1981	1983	1985	1986	1989	1991	1993
Ec μS/cm	600	1000	1200	1150	1650	1800	2100	2200	2300

1. Data are yearly averages.
2. Analytical results are representative of groundwater supplied to the HTPS from water supply wells during 1977-1994.

TABLE 4

HTPS WATER CONSUMPTION AND POTENTIAL WATER CONSERVATION

Water Use Center	Current Fresh Water Consumption (m^3/h)	Proposed Water Consumption (m^3/h)			Measures
		Total Process Consumption	Recycle Potential	Net Fresh Water Consumption	
Process Water	**70**	**53**	**19**	**34**	
Sampling Panel	5	3	0	3	Modify procedure
Soot Blowing	4	1	0	1	Use high pressure air
Auxiliary Boilers	5	5	0	5	
Bearing Cooling	1	1	0	1	
Fuel Atomizing	6	3	0	3	Use high pressure steam
Boiler Blowdown	7	7	7	0	Recycle
Vented Steam	12	12	12	0	Condense and recycle
Ion Exchange Regenerant	10	7	0	7	Optimization
RO Reject	20	14	0	14	Optimization
Cooling Water	**25**	**27**	**22**	**5**	
Evaporation Losses	20	20	20	0	Condense and Recycle
Blowdown	5	3	2	1	Pretreat and Recycle
RO Reject	0	4	0	4	
Domestic Uses	**35**	**18**	**0**	**18**	
Washdowns/Spills/Leaks	15	8	0	8	Good Housekeeping, Better Control
Domestic Water	20	10	0	10	Tighter Control/Better Management/Recycle
TOTAL	130	98	41	57	

FIGURES

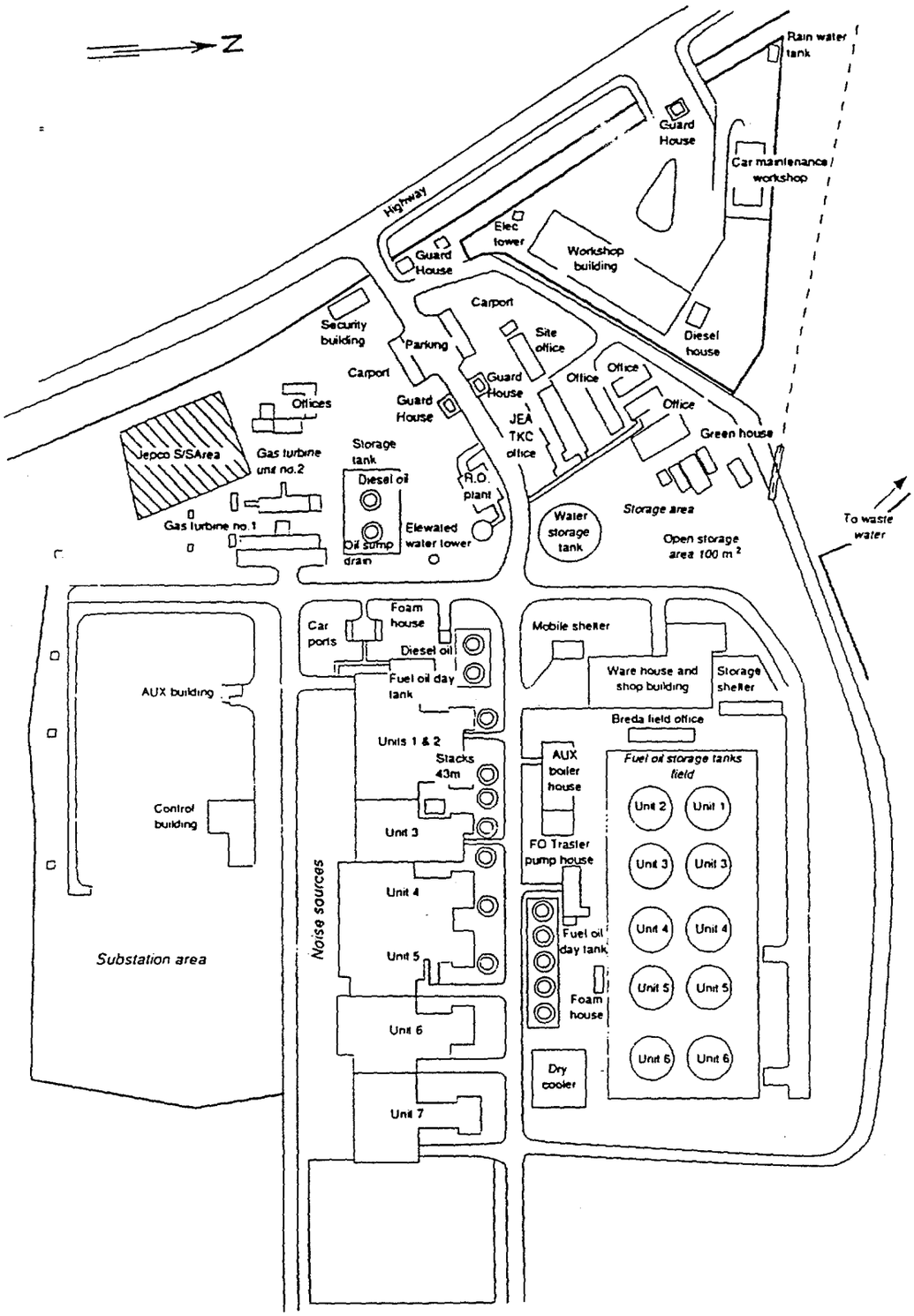

SOURCE:
Industrial Pollution Control Project, Jordan
Project Component No. 2, Chapter 19
COWIconsult and RSS

HARZA *Consulting Engineers and Scientists*

Figure 1
AL HUSSEIN THERMAL POWER STATION
INDUSTRIAL WASTEWATER DISCHARGE PREVENTION
WATER QUALITY IMPROVEMENT AND CONSERVATION PROJECT
Amman, Jordan

e:\jordan\titles1.pm5

48

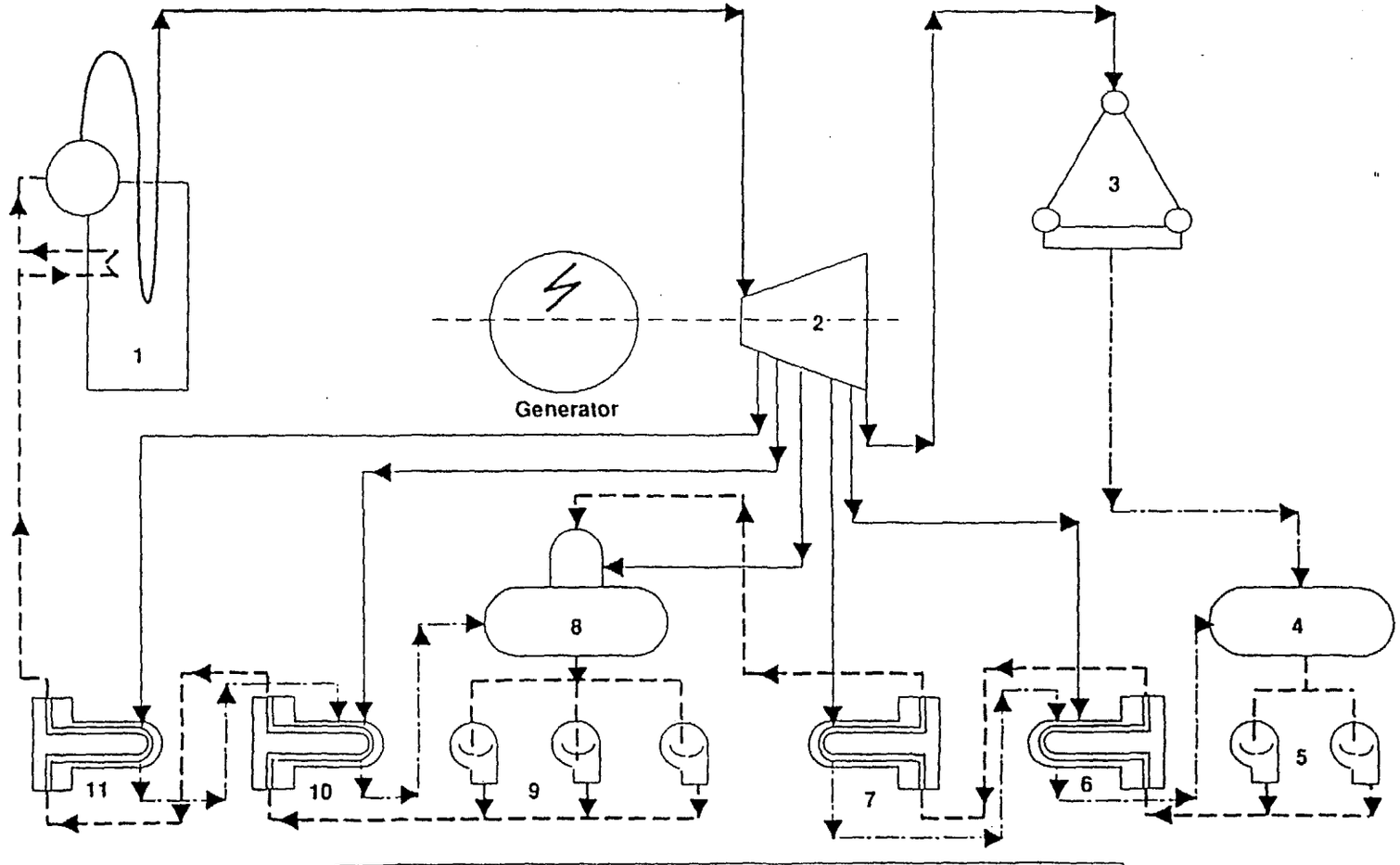

1. Boiler	7. Low pressure Heater No. 4	Main Steam
2. Turbine	8. Deaerating Heater	Feed Water
3. Air Cooled Condenser	9. Feed Water Pumps	Exhaust Steam
4. Condensate return tank	10. High pressure Heater No. 2	Condensate Water
5. Condensate Extraction Pumps	11. High pressure Heater No. 1	
6. Low pressure Heater No. 5		

SOURCE:
Industrial Pollution Control Project, Jordan
Project Component No. 2, Chapter 19
COWIconsult and RSS

Figure 2
THE STEAM CYCLE:
AL HUSSEIN THERMAL POWER STATION
INDUSTRIAL WASTEWATER DISCHARGE PREVENTION
WATER QUALITY IMPROVEMENT AND CONSERVATION PROJECT
Amman, Jordan

HARZA *Consulting Engineers and Scientists*

49

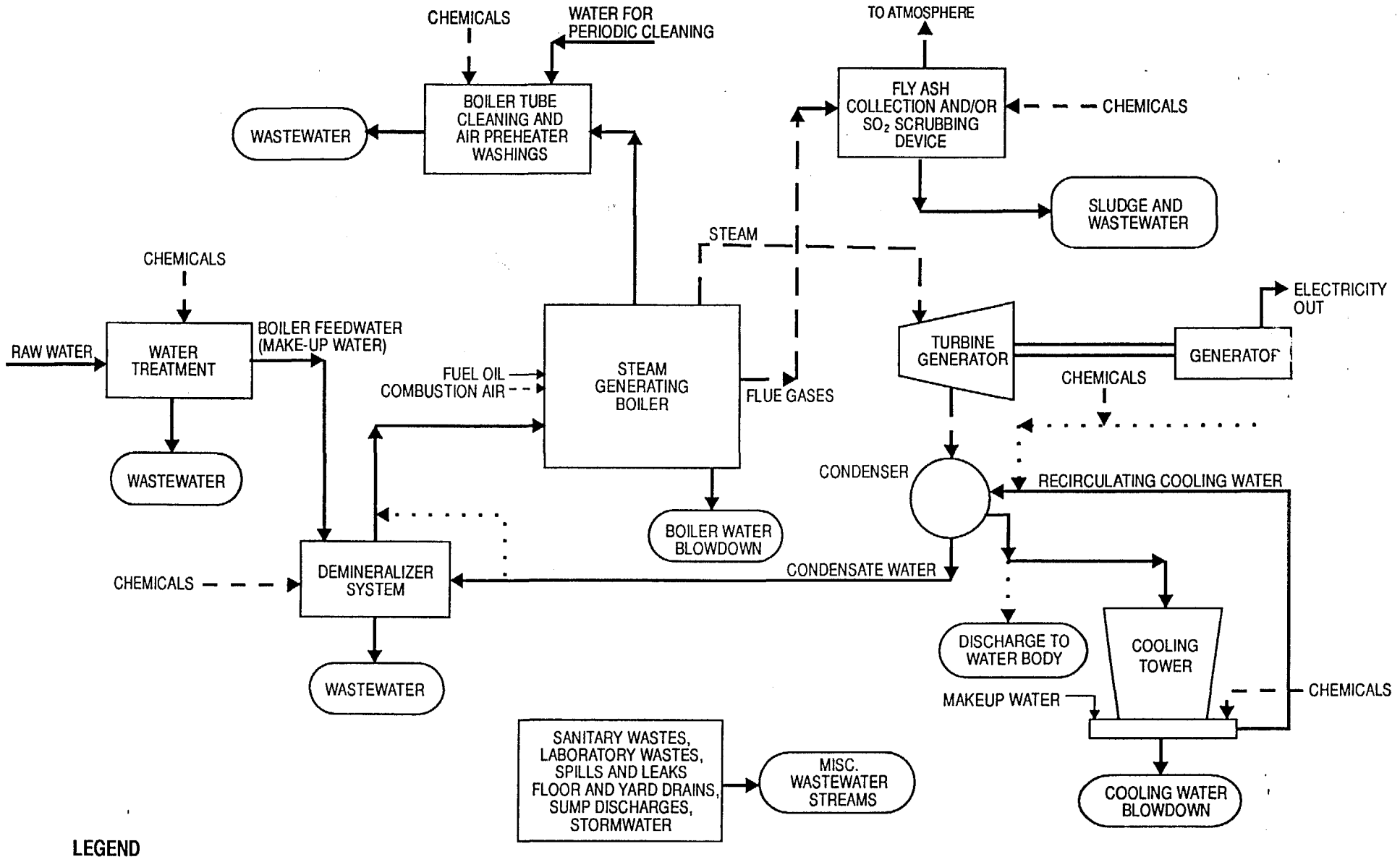

Figure 3

GENERALIZED WASTE AND WATER DIAGRAM FOR A TYPICAL OIL-FIRED STEAM ELECTRIC POWER PLANT

INDUSTRIAL WASTERWATER DISCHARGE PREVENTION
WATER QUALITY IMPROVEMENT ANC CONSERVATION PROJECT
Amman, Jordan

HARZA *Consulting Engineers and Scientists*

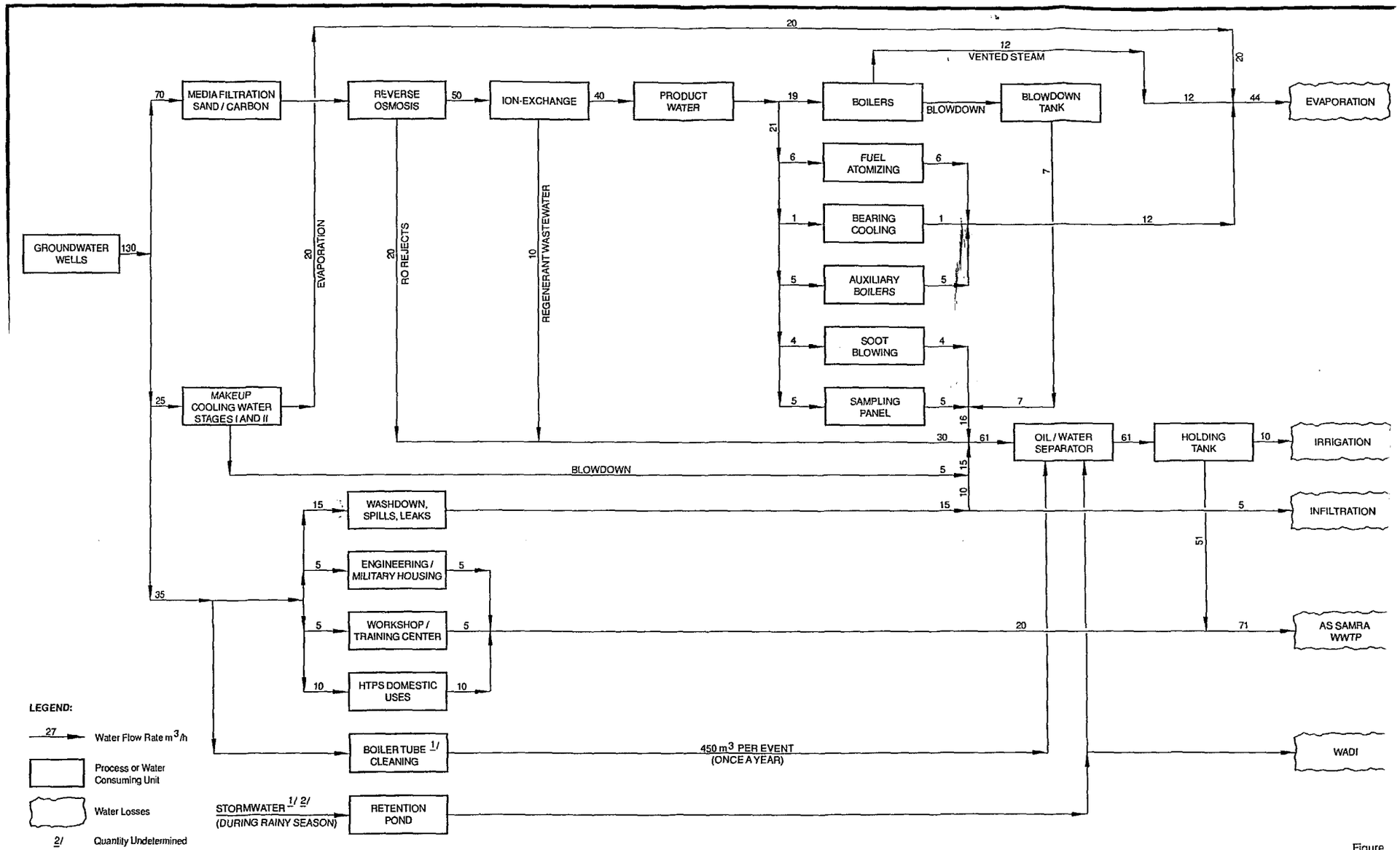

HARZA Consulting Engineers and Scientists

Figure
OVERALL WATER BALANC
AL HUSSEIN THERMAL POWER STATIC
Amman, Jord

31

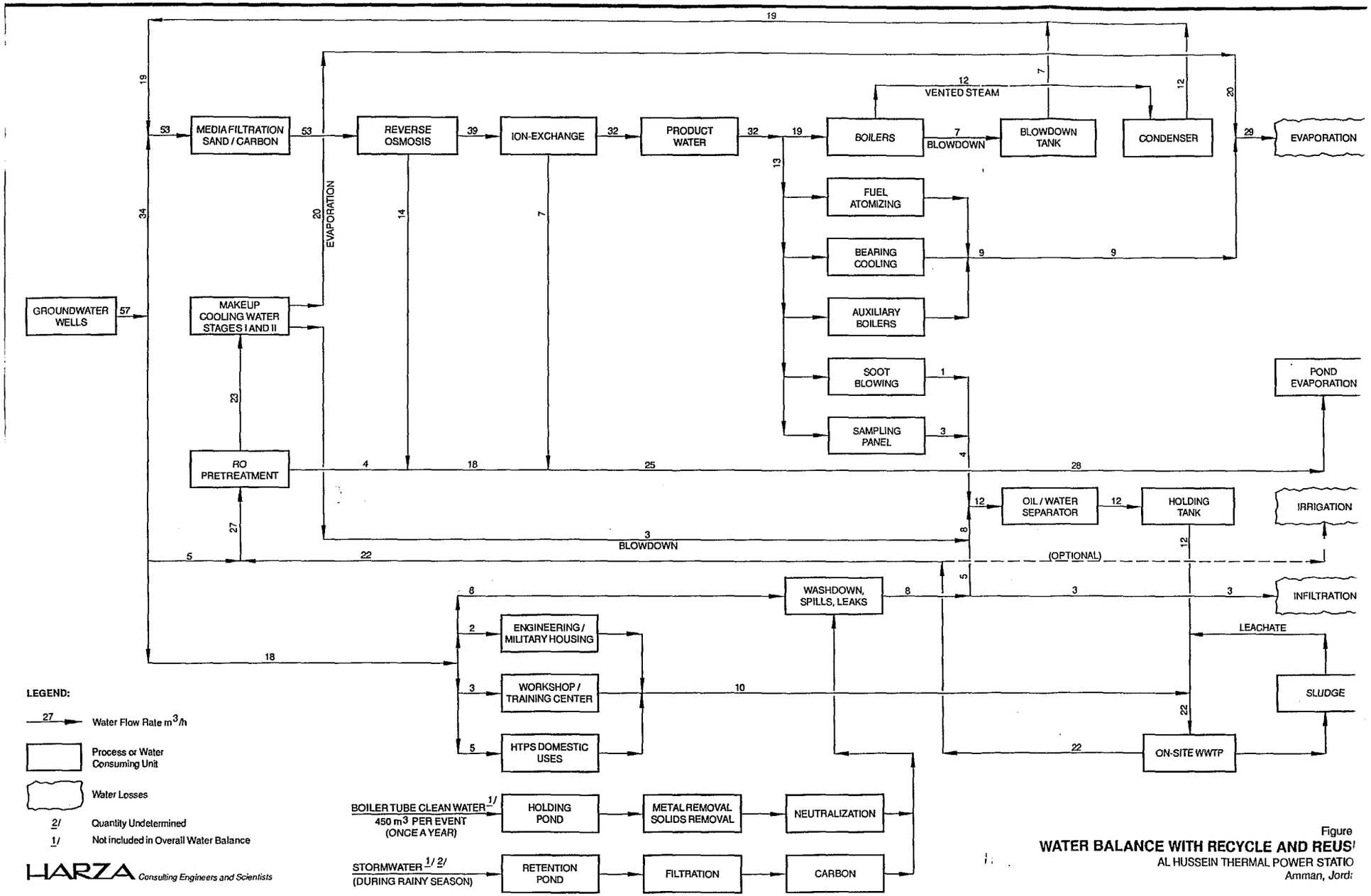

Figure
WATER BALANCE WITH RECYCLE AND REUS
AL HUSSEIN THERMAL POWER STATIO
Amman, Jord

APPENDICES

APPENDIX A

AUDIT QUESTIONNAIRE

BEST AVAILABLE COPY

WQICP WASTE MINIMIZATION AUDIT

Facility Name: AL Hussein Thermal Power Station (HTPS) Auditor/Firm: HARZA / RSS

Date: 10/29/1994

ATTACHMENT A

AUDIT QUESTIONAIRE*

SITE DESCRIPTION

Facility Name: AL Hussein Thermal Power Station (HTPS)

Area: 350 donums

Address: Zarqa - Jordan, P.O. Box 633

Telephone: 09 - 911 201

Major Products: electric energy

Production Rate: 398 MW

SIC Codes:

Major Sources of Wastewater Discharges:

Industrial: R.O reject, I.E regeneration effluent, Cooling tower blowdown, and Boiler Continuous blowdown.

Domestic: Sanitary wastewater

Major Processes: 1. Steam Production units

2. Water Treatment Units

Facility/Equipment Age: 19 yrs / 19 - 9 yrs

* The information in this questionaire was supplied by HTPS Engineers.

BEST AVAILABLE COPY

WQICP WASTE MINIMIZATION AUDIT

Facility Name: HTPS Auditor/Firm: HARZA/RSS

Date: 10/29/1994

INPUT MATERIALS SUMMARY

Material	DESCRIPTION[1]		
	Stream No.	Stream No.	Stream No.
Name Fuel Oil			
Source/Supplier JPR			
Component of Concern			
Annual Consumption Rate 730,000 L/yr			
Overall			
Component(s) of Concern			
Purchase Price, $ per			
Overall Annual Cost			
Delivery Mode[2] Pipline			
Shipping Container Size & Type[3]			
Storage Mode[4] Tanks according to API Specs.			
Transfer Mode[5] pipelines			
Empty Container Disposal/Management No			
Shelf Life N.A			
Supplier Would			
- accept expired material (Y/N) N.A			
- accept shipping containers (Y/N) N.A			
Acceptable Substitute(s), if any N.A			
Alternate Supplier(s) N.A			
Product Inventory Records N.A			

1. Stream number, if applicable, should correspond to those used on process flow diagram
2. e.g., pipeline, tank truck, etc.
3. e.g., drum, paper bag, tank, etc.
4. e.g., outdoor, warehouse, underground, aboveground, etc.
5. e.g., pump, forklift, conveyor, etc.
6. e.g., crush and dump, clean and recycle, return to supplier, etc.

N.A : not applicable

BEST AVAILABLE COPY

WQICP WASTE MINIMIZATION AUDIT

Facility Name: HTPS

Auditor/Firm: HARZA/RSS

Date: 10/29/1994

PROCESS INFORMATION

Operation Type: -- Continuous -- Discrete
-- Batch or Semi-Batch -- Other_____

Document	Complete? (Y/N)	Current? (Y/N)	Document Number
Process Flow Diagram	Y	Y	
Material/Energy Balance	Y	Y	
Design	Y	Y	
Operating	Y	Y	
Flow/Amount Measurements			
Stream			
Analyses/Assays	Y	Y	
Stream			
Plant Layout	Y	Y	
Process Description	Y	Y	
Operating Manuals	Y	Y	
Equipment List/Age	Y	Y	
Equipment Specifications	Y	Y	
Piping & Instrument Diagrams	Y	Y	
Plot and Elevation Plan(s)	Y	Y	
Environmental Audit Report	Y	Y	
Permit/Permit applications	Y	Y	
Raw Material Inventory Records	Y	Y	
Product Inventory Records			
Management method practiced for	Y	Y	
each wastewater stream			
Wastewater treatment facilities	Y	Y	
Waste management practice			
Ancillary facilities			
Annual cost for management of	No	No	
the wastewater discharge			
Photographic records			

BEST AVAILABLE COPY

APPENDIX B

FOLLOW-UP QUESTIONNAIRE

BEST AVAILABLE COPY

Al Hussein Thermal Power Station

Date: 10/31/1994

Additional Checklist:

1- Holding Tank and Oil- seperator Diagrams, capacities.??

2- Water Balance, cooling water balance? Where does 20 m3/hr cooling water go . What do the two wet cooling towers consume???

3- Drain System in the plant???

4- Actual water quality data???

5- Is oil and grease monitored by HTPS or WAJ???

6- Water table depths ???

7- IE unit discharge analysis???

8- Domestic Line analysis??? Check the possibility of recycling???

9- Workshop and housing, are they connected with the same sewer line ???

10-Lab waste???

11-PCBs in transformers?? are they onsite???

12-How are the boilers, preheat coolers cleaned???. are acid and soaps used??? *Does this line drain directly to the waste water tank*???

13-Is there any autamatic sprinkler system???

14-Cooling Towers: bearing, make-up.....???

15-Lubricating Oil, what happens to taht???

16-CBD: analyses?? any side streams coming in contact with it???

17-Are their any specs for R.O input or Cooling tower input????

18-What is the water balance of the pump system??? (leaks , cooling evaporation, wastewater)

BEST AVAILABLE COPY

APPENDIX C

SUPPORT DATA PROVIDED BY THE INDUSTRY

BEST AVAILABLE COPY

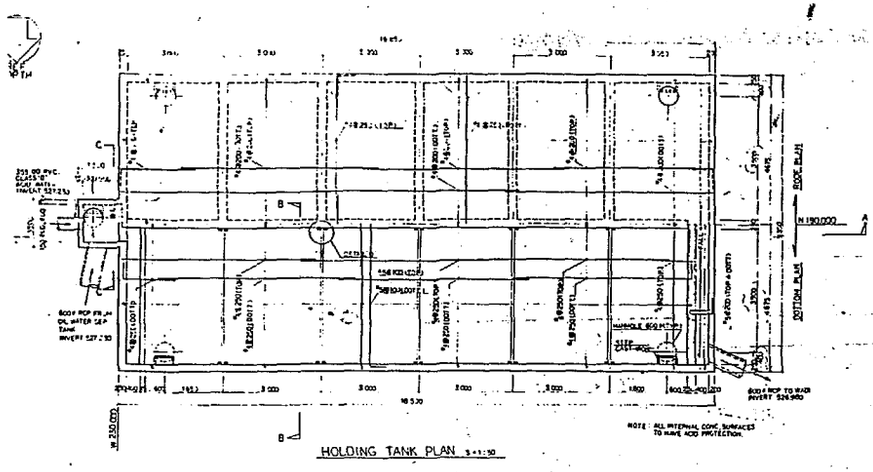

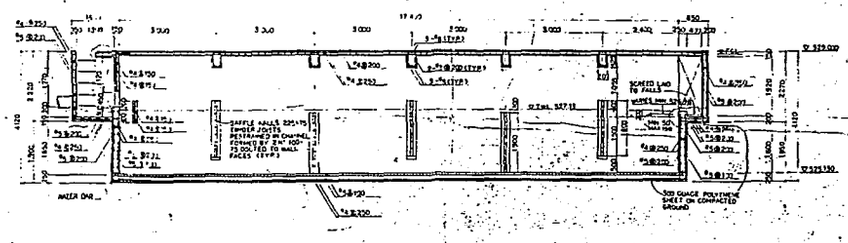

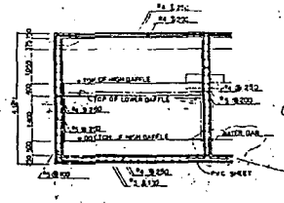

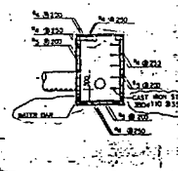

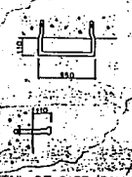

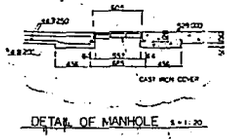

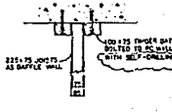

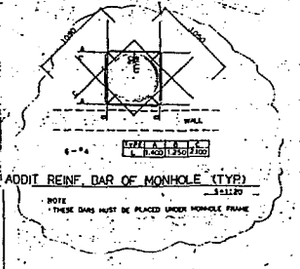

SCHEDULE OF MANHOLES

M.H.	POSITION NORTH	POSITION WEST	INVERTS DRAIN	INVERTS COVER	TYPE	CONFIG	REF.	NOTE
102	141.46	140.00	540.860	546.23	C			
31	170.210	143.00	529.500	532.810	B			
5.4	170.810	155.214	528.500	532.810	C		MSA-200	UNDER CONSTRUCTION
PC1	199.140	99.94 / 100.24	528.225	529.00	-		18-057	
101	212.100	155.214	528.08	529.480	B		MSA-219	
64	150.420	240.493	541.650	545.500	B		MSA-212	
85	168.393	240.493	531.250	533.625	B		MSA-210	
4.4	172.210	156.644	528.500	532.810	C		MSA-200	
102	139.58	141.430	541.480	546.23	C			IN ABEYANCE
36	139.54	153.95	541.650	546.23	B			EXISTING MH - CONNECT
125	139.56	166.750	541.330	546.85	C			
62	171.36	166.750	531.250	532.250	B			
134	150.200	166.750	530.050	531.125	B			
41	193.200	225.430	531.230	534.120	3/4		72-19	
PC2	206.820	225.64	527.450 / 527.850	528.780	3/4		74-102	

- MANHOLE NUMBERS 76-81 & 83-92 N.G. CANCELLED. NUMBERS 97-99 INC. NOT USED.
- THE INFORMATION SHOWN HERE SUPERSEDES THE EQUIVALENT ON R.2145-PC1.
- THIS SCHEDULE: ANNOLES MAY BE CHANGED BY SITE INVESTIGATION

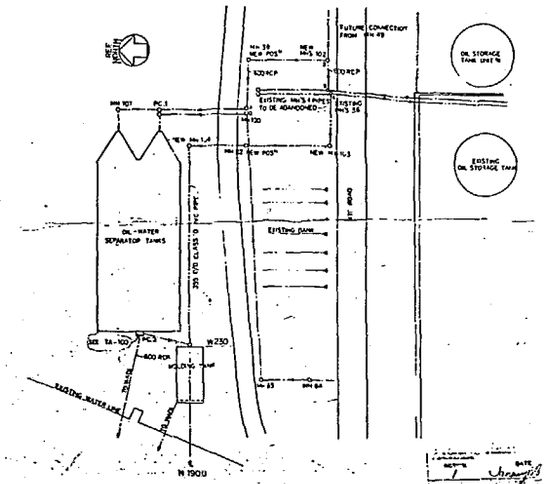

MICROFILMED

FOR DISTRIBUTION

DRAWING SCALES

NO.	DATE	REVISION
1	13-JAN-1970	ISSUED BY ACT. E
2	13-JAN-1970	ISSUED BY ACT. E

JORDAN ELECTRICITY AUTHORITY
HUSSEIN THERMAL POWER STATION
1-60MW UNIT NO.6 STAGE II

HOLDING TANK PLAN, SECTION & DETAILS

THE KUL-RAN CORPORATION PHILADELPHIA, PA. U.S.A.

C. ITOH & CO., LTD TOKYO JAPAN

TOKYO ELECTRIC CO. MEIWA-CO. LTD TOKYO JAPAN

JOB No.: H-514

SCALE: 00-

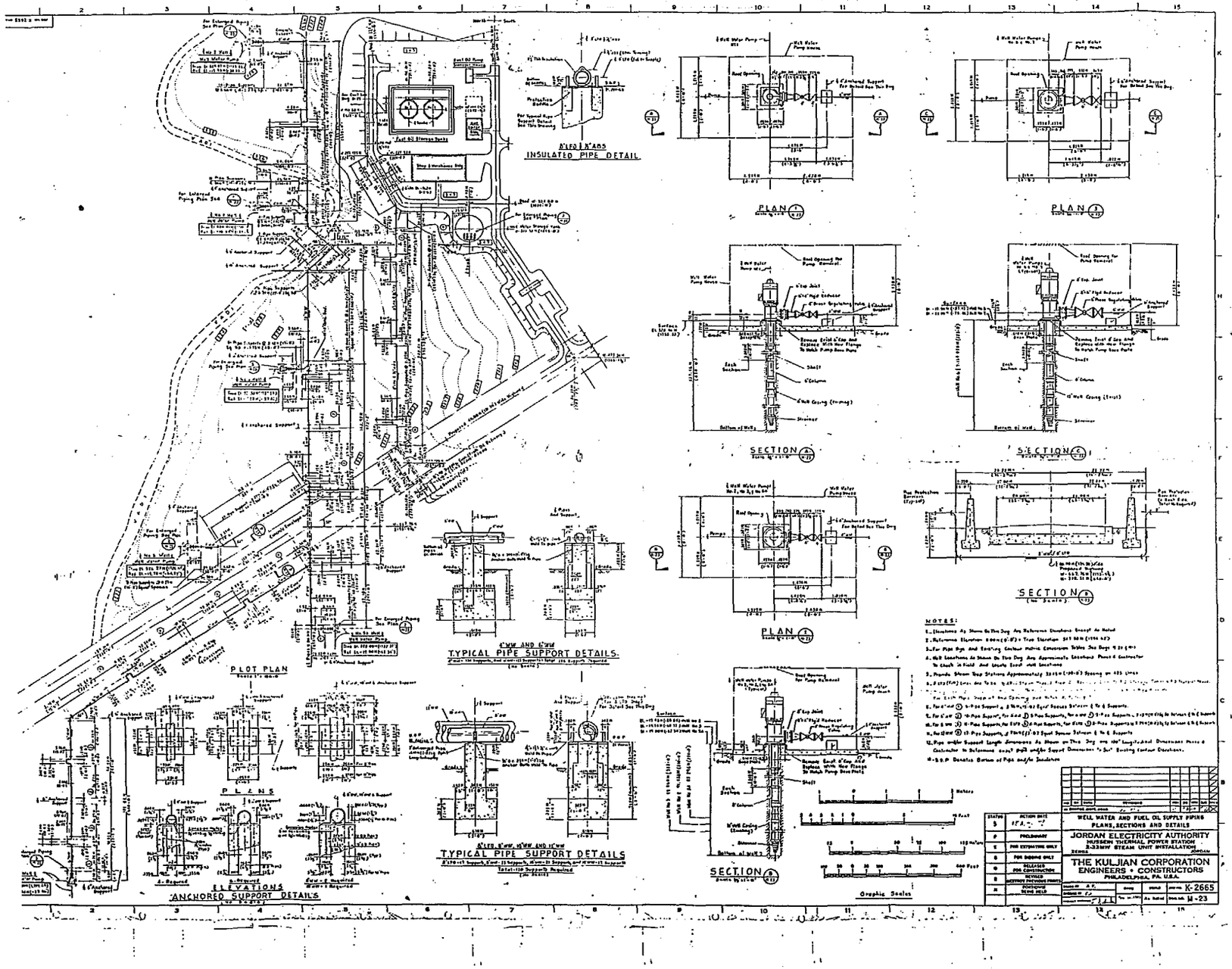
8"LEG 1"ABS
INSULATED PIPE DETAIL
PLAN
PLAN
SECTION
SECTION
PLAN
SECTION
PLOT PLAN
4"WW AND 6"WW
TYPICAL PIPE SUPPORT DETAILS
PLANS
ELEVATIONS
ANCHORED SUPPORT DETAILS
8"LEG, 6"WW, 10"WW AND 12"WW
TYPICAL PIPE SUPPORT DETAILS
SECTION
Graphic Scales
NOTES:
WELL WATER AND FUEL OIL SUPPLY PIPING
PLANS, SECTIONS AND DETAILS
JORDAN ELECTRICITY AUTHORITY
HUSSEIN THERMAL POWER STATION
2-33MW STEAM UNIT INSTALLATION
THE KULJIAN CORPORATION
ENGINEERS • CONSTRUCTORS
PHILADELPHIA, PA. U.S.A.
K-2665
M-23

BEST AVAILABLE COPY

BEST AVAILABLE COPY

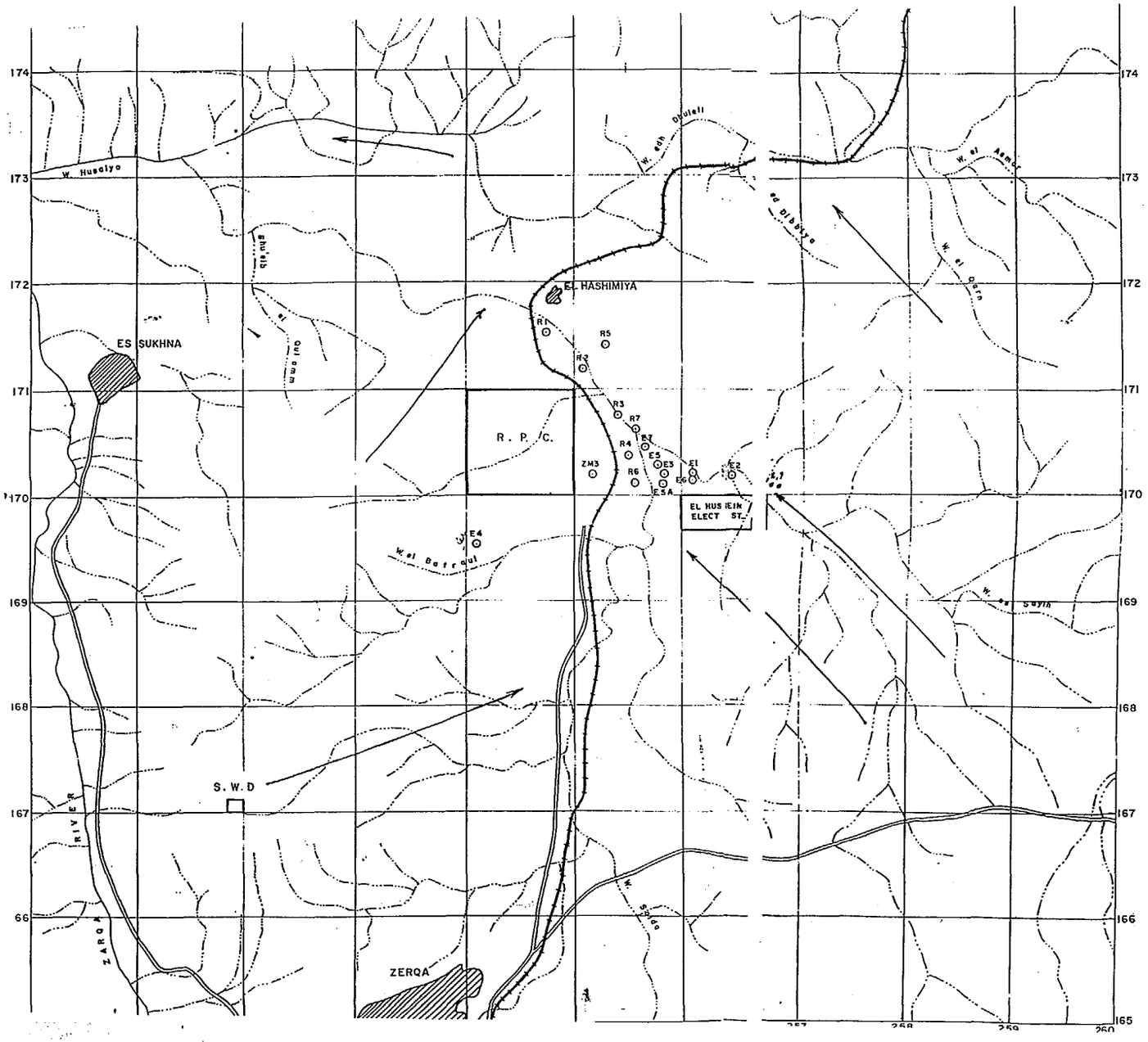

LEGEND

TOWN OR VILLAGE	
ROAD 1ST. CLASS	
RIALWAY	
RIVER	
WADI	
WELL NAME AND NO.	R.E.5
REFINERY PETROLUM Co.	R.P.C.
SEWAGE WASTE DISPOSAL	S.W.D
REFINERY Co.	R
ELECTRICITY AUTHORITY	E
GROUND WATER FLOW DIRECTION	

THE
HASHEMITE KINGDOM
OF
JORDAN

N. R. A. — W. R. D.

REFINERY AREA WELL LOCATION MAP

SCALE 1: 25.000

Prep. by : A. M. Hemud
Drafting by: N. S. Dubayah

21/10/1978

* FUEL OIL/ANNUAL CONSUPTION RATE (600,000 -650,000 TON/Y

: RAW WATER ANNUAL CONSUMPTION RATE (1123200 M^3/Y

: TOTAL PRODUCT/ REVERSE OSMOSIS PLANT (483840 M^3/Y

: TOTAL PRODUCT/ WATER TREATMINT PLANTS / 414720 M^3/Y

: ANNUAL WASTE WATER DISCHARGE 336960 M^3/Y

NAME OF CHEMICALS USED

CHEMICAL NAME	FORMULA	CONSUMTION/MONTH
COUSTIC SODA	NaOH	21.20 ton
HYDRAZIENE	N2H4	80.00 Kg
TRI SODIUM PHOSPHATE	Na3PO4	90.00 Kg
HEXAMETA SODIUM PHOSPHATE	(NaPO3)6	200.0 Kg
MORPHOLINE	C4H9NO	90.00 Kg
HYDROCHLORIC ACID	HCL	27.28 ton
SULFURIC ACID	H2SO4	6.650 ton
SODIUM HYBO CHLORID	NaOcL	820.0 Kg

* Trisodium Phospha e : Injected on drum boiler . To Increases P H. Value, and to Combines rapidly with scale product,

* Hydraziene :- injected on feed water to increase P H. Value, and to Reacte with O_2

$$N_2 H_4 + O_2 \longrightarrow N_2 + 2H_2o.$$

Morpholine :- Injected on condensate water to React with CO_2 .

Naoel :- Used in (R.O) - In feed water to Protecte (Membrans)

JORDAN ELECTRICITY AUTHORITY

HUSSEIN THERMAL POWER STATION

CHEMICAL SECTION

((DEPOSITE ANALYSIS))

SAMPLE : UNIT (2)

LOCATION : FURNACE (FLOOR) DATE :13/ 4 / 1994

T E S T	RESULT	REMARKS
PH FOR 1% SOLU.	6.5	
IRON Fe AS Fe2O3	0.62 % W/W	
MAGNESIUM Mg AS MgO	26.50% W/W	
VANADIUM V AS V2O5	14.28% W/W	
CALCIUM AS CaO	2.55% W/W	
SULFATES AS SO4	35.0% W/W	

ANALYST : CHEMICAL ENG. :

JORDAN ELECTRECITY ATHORITY

HUSSEIN THERMAL POWER

==========

DEEP WELL ANALISIS

****

WATER QULITY USED DURING 1977 __1994

==========

YEAR	1977	1978	1979	1980	1981	1982	1983	1984
COND-MM/CM	600	700	1000	1100	1200	1100	1150	1200

YEAR	1985	1986	1987	1988	1989	1990	1991	1992
	1500	1650	1800	1900	2000	2100	2150	2200	2300

YEAR	1993	1994
COND-MM/CM	2300	2800

*** FUEL ANALSIS ***

TYPE ANALSIS	RESULTS
DENSITY @ 15 C , gm/cm3	0.9586
VISCOSITY @ 100F REDWOOD.1 SEC	2940.9
ASH	0.0140
FLASH POINT P.M.,C	112.00
SULPHUR %wt	3.7 - 4.0
HYDROGEN %wt.	9 - 11
CARBON %wt.	85 - 86
OXYGEN %wt.	*******
WATER BY dist%wt.	0.050
VANADIUM ppm	60
SODUIM ppm	30
HEATING VALUE Gross btu/lb	18340 - 18700

JORDAN ELECTRICITY AUTHORITY

HUSSEIN THERMAL POWER STATION

** WATER ANALSIS **

SAMPLE LOCATION	PH	COND- ms/cm	TDS ppm	SiO2 ppm	NH3 ppm	PO4 ppm	CL- ppm	TH ppm	Fe ppm
WESTE WATER	7.3	2315	1689	10.70	0.21	0.81	438.6	175	---
R.O PRODUCT	6.9	420	215	1.3	---	---	68	20	---
R.O BRINE	6.7	21000	12600	24.5	---	---	1825	680	---
WATER TRET-MENT. PROD-	6.8	1.2	0.72	0.02	---	---	---	NIL	---
CONTENUOUS BLOW DOWN	9-9.7	10-40	6-24	<0.5	0.4	0.5-3	<0.1	NIL	<0.04

actual

units

CHEMICAL FUEL ADDITIVES

Since 1985 , Hussein Thermal Power Station has been using chemical fuel additives to treat the burnt fuel oil in all seven steam boilers . The additive is injected directly in combustion chambers using separate system. The currently used fuel additive is a magnesium base slurry type. It has the following specifications as were given by the contractor :-

DENSITY	1.7 Kg PER LITER , NOMINAL
MgO CONTENT	1 Kg LITER , NOMINAL
OTHER OXIDES	0.1 Kg PER LITER SIO_2, $A1_2O_3$, CaO
PARTICLE SIZE	2.5 MIRCRONS (90% MINIMUM)
VISCOSITY	800 - 1200 CP, NOMINAL
POUR POINT	UP TO - 10 C^o
HEAT VALUE	6.100 KCal / LITER
FIRE POINT	111 C^o CLEVELAND OPEN CUP
FLASH POINT	65 C^o DIN 53213 OPEN CUP
SETTLING	NONE, FOR THE BRIST 3 MONTHS
EROSIVENESS	NONE

The specifications of the feed equipments used for injecting the additives are [illegible] consist of:-

- One complete feed unit to treat units 1,2 and 3 . It consists of three dosing pumps and two injectors per boiler .
- One complete unit to supply units 4 and 5
- One complete unit to supply units 6 and 7
- The additve is atomized by dry air and injectors are cooled with water circulation .

JEA intends to continue fuel oil treatment for all seven steam boilers , which have the following main specification :-

../2..

MANUFACTURES	KAWASAKI HEAVY INDUSTRIES(JAPAN)	ANSALDO (ITALY)
TYPE	NATURAL CIRCULATION DRUM BOILER WITH ECO.	NATURAL CIRCULATION DRUM BOILER
CAPACITY AT FULL LOAD	299.4 TON /hr	159 TON/hr
PRESSURE	150 Jg/CM^2	63 Kg/CM^2
FUEL SPECIFIC CONSUMPTION	260 gm/KW hr	300 gm/KW hr
NO. OF BURNERS	6	4
TYPE OF BURNERS	STEAM ATOMIZING	MECHANICAL ATOMIZING
FLUE GAS OUTLET TEMPERATURE C^o	150	150
EXCESS OXYGEN % VOL.	0.8 - 2.0	0.8 - 2.0
COMBUSTION AIR TEMP . C^o	270	230
SUPERHEATER ARRANGEMENT	HORIZONTOL	VERTICAL

FUEL ADDITVE ARE EXPECTED TO SOLVE THE FOLLOWING PROBLEMS :-

1) SO_3 - RELATED PROBLEMS , SUCHAS :-

   a) Cold and corrosion

   b) Fouling of convective passages

   c) Corrosive emissions ,such as acid smuts

2) High temperature corrosion and fouling

3) Reduction of NO_x emission

/3..

FLOW DIAGRAM AROUND MgO DOSING EQUIPMENT

JICA / M. MURAMATSU

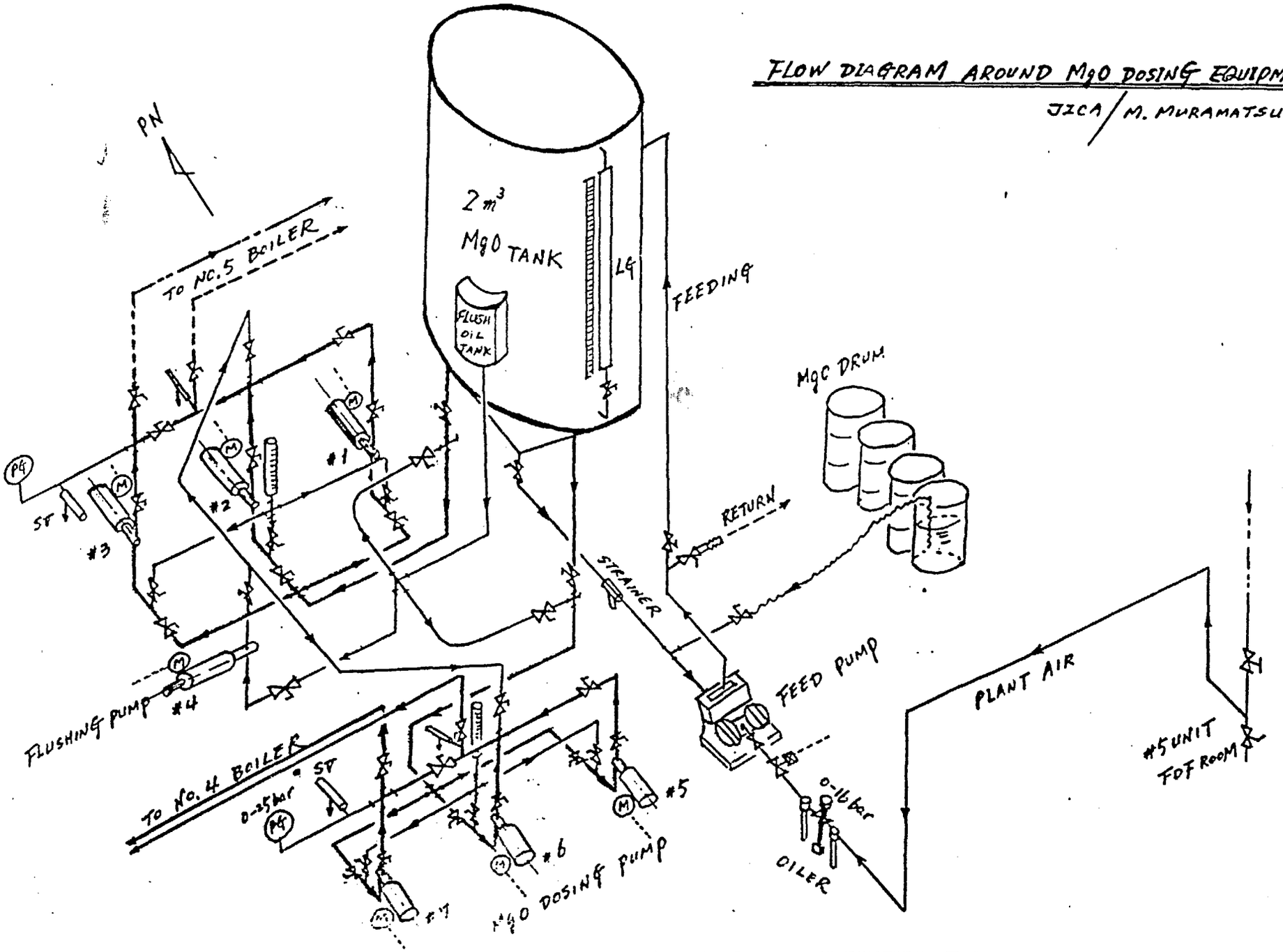

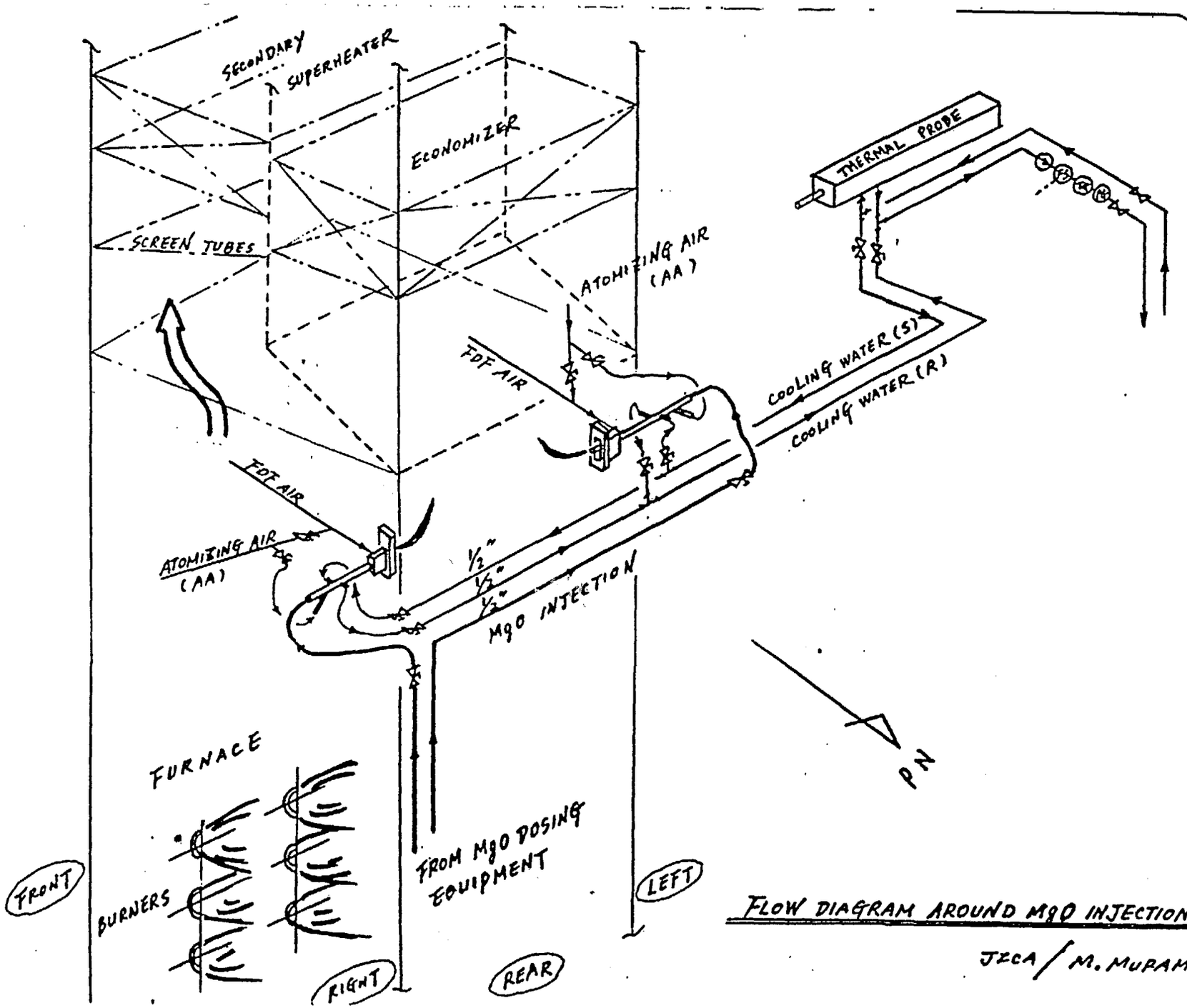

FLOW DIAGRAM AROUND MgO INJECTION NOZZLES

JICA / M. MURAMATSU

76

JEA/HTPS No.4 BOILER

3 November, 1986

CHEMICAL INJECTION INTO THE FURNACE

— DUST SAMPLE COLLECTOR —

MATERIAL : CARBON STEEL

JICA

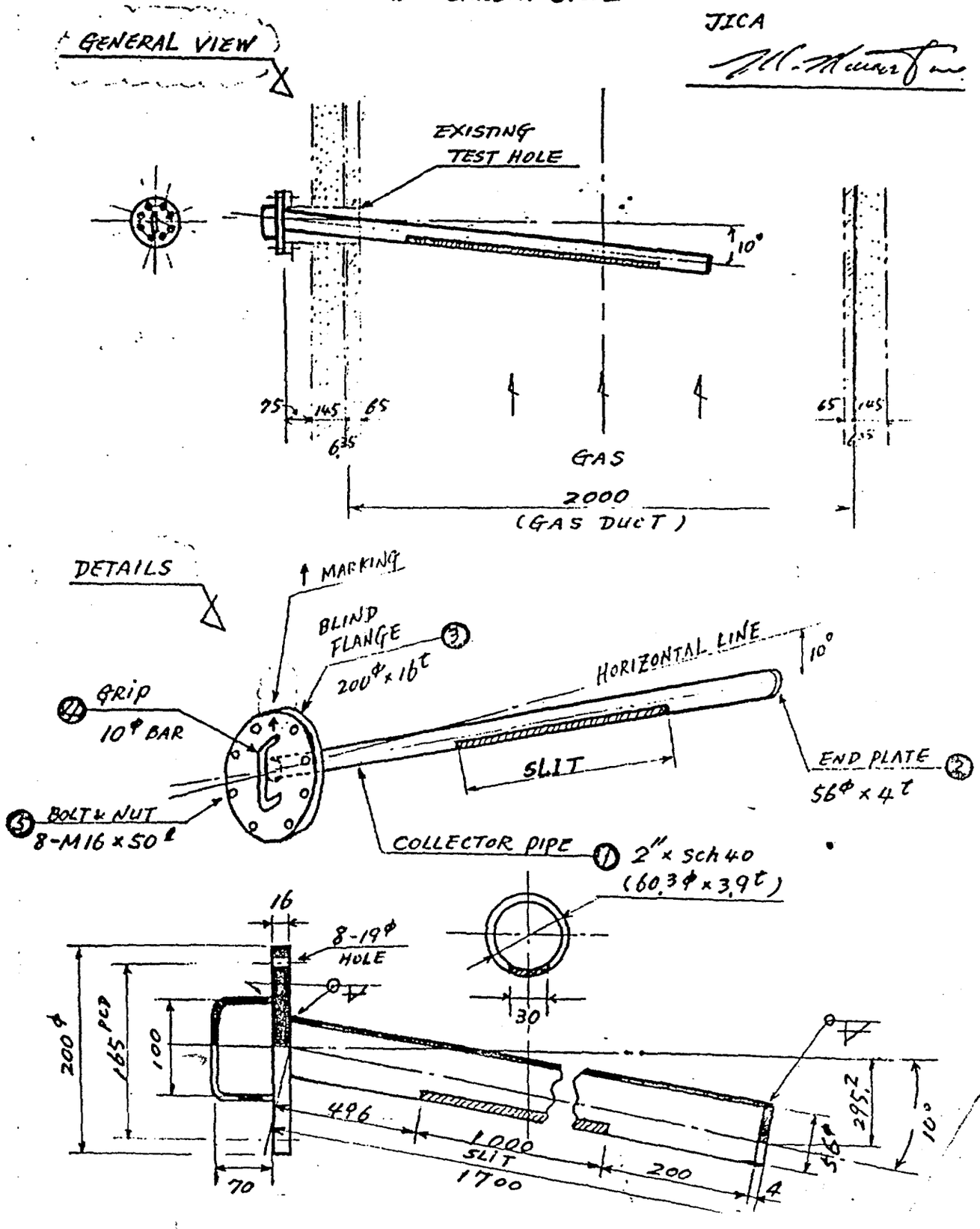

77

UNIT NOS. 4, 5, 6 & 7

2nd December, 1986

JEA / HTPS : CHEMICAL INJECTION INTO THE FURNACE

SUPPORT FLANGE FOR SAMPLING PROBE OF ASH, SO_3 AND DEW POINT MEASUREMENTS

JICA M. MURAMATSU

1. MATERIAL : CARBON STEEL

2. QUANTITY : 2 SETS / BOILER

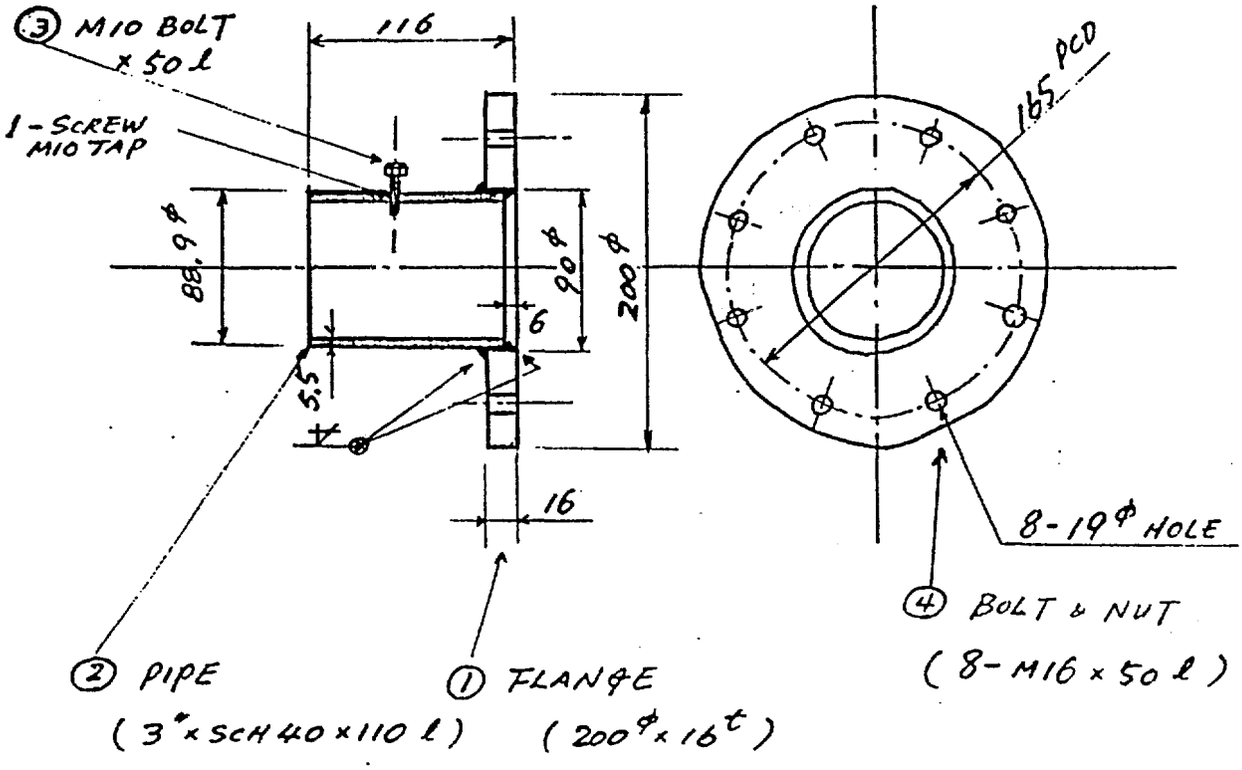

3. USE FOR : SAMPLING NOZZLES ON THE GAS DUCT TO THE STACK

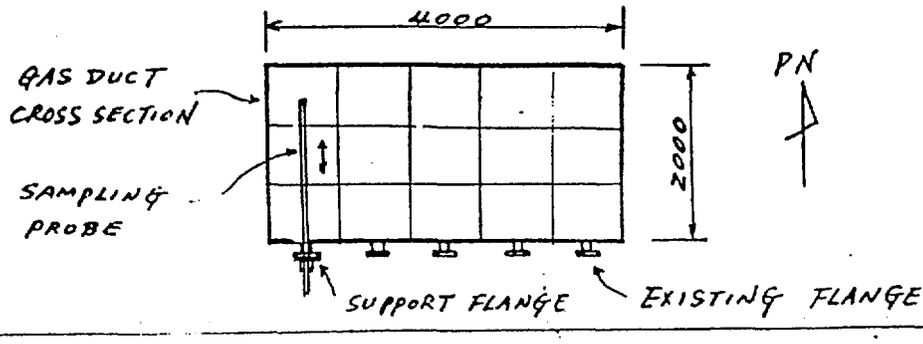

1. Outline

This equipment is the water treatment equipment for JORDAN ELECTRICITY AUTHORITY FUSSEIN THERMAL POWER STATION UNIT No.4 ~ No.6.

1.1 Outline Flow Sheet

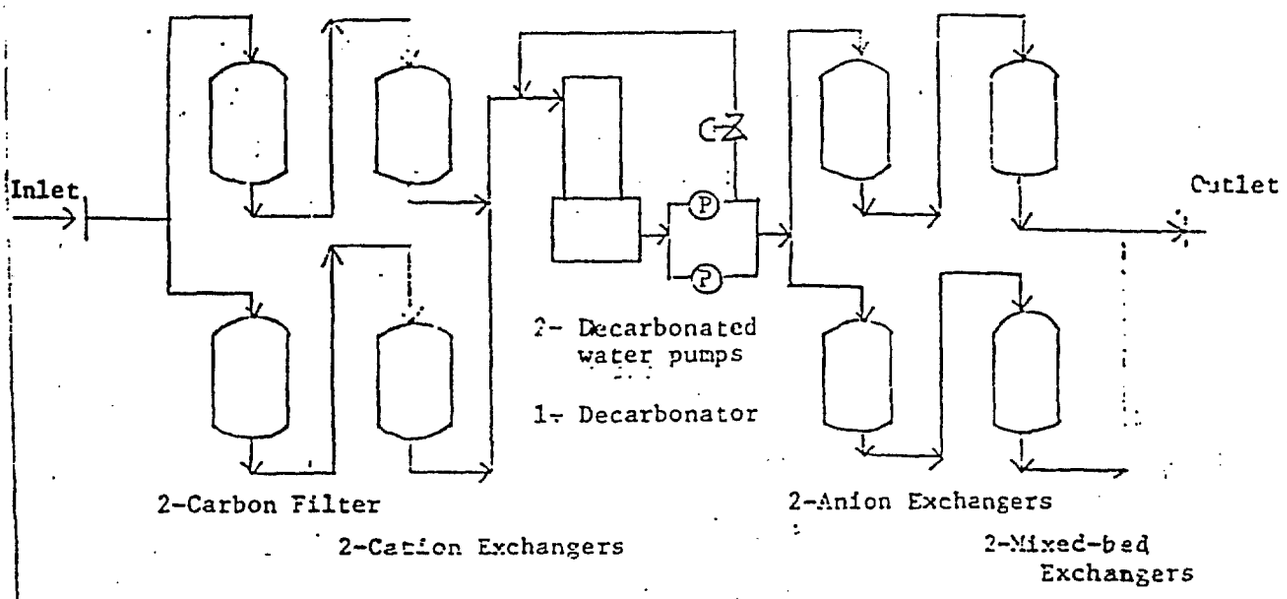

1.2 Descriptions

The R.O water, connected to the water treatment chamber, flows into the carbon filter in which residual chlorine is removed. Moreover, some of turbidity substances are also removed. The filtered water then enters the cation exchanger in which cations contained in the water are removed. The deionized water is sent to the decarbonator in which carbonic acid compounds such as CO_2, HCO_3, etc. contained in the water are removed through contacting with the air which is supplied under pressure. Other anions, which can not be removed in the decarbonator, are removed in the following anion exchanger.

The effluent from the anion exchanger removed of both from cations and anions but still containes trace of ions which have leaked out. In order to remove them, the mixed-bed exchanger is provided.

The mixed-bed exchanger is packed with a mixture of cation-resin and anion-resin, so it follows that the functions of cation exchanger and anion exchanger are included unlimitedly in this exchanger.

1.3 Basis of Design

1.3.1 Capacities per one cycle

Cation and Anion outlet :	144,000 gal/cycle
Mixed-bed exchanger :	1,000,000 gal/cycle

Describe how The waste is generated?

The rinse water of part desalting plants are neutralized in neutralization Pit with Hcl or NaoH to reach pH7, and Then draind.

1.2 Functions of Equipments

a. Pretreatment System

1) Dual media filters

For preventing the RO element from clogging and for maintaining its performance, SS (suspended solids) contained in the raw water will be removed by the filters, aiming at maintaining the FI value of treated water under four (4) ~ five (5).

2) Backwash system

This system will be for washing filters. Backwash will take two steps. In the 1st step, air scouring will be made. In the 2nd step, rinsing (water backwash) will be made using water.

Brine from the RO module will be used as the backwash water.

3) Cartridge filters

Cartridge filters will be provided to protect the RO element by catching up fine materials which pass through sand filters.

4) Alum dosing equipment

Alum will be used as the coagulant to enhance SS removal in the filtration process.

5) HCl dosing equipment

HCl will be used to condition pH to 5.5 - 6.0 maximum for the purpose of maintaining the efficient operation and performance of the RO element.

6) NaOCl dosing equipment

Into the raw water, NaOCl will be dosed at 0.5 to 1.0 mg/ℓ as Cl_2. The dosing point will be either one of two points, one before the dual media filter and the other before the cartridge filter.

Cl_2 dosing will be intended to prevent generation of bacteria and slime, which are detrimental to the RO module.

7) SHMP dosing equipment

SHMP will be used for preventing scale accumulation

81

on the membrane surface.

b. Reverse Osmosis Control Blocks

1) High pressure pumps

The pretreated water will be boosted up enough for supply to the RO modules.

2) RO modules

The RO module will consist of RO membrane elements and be skidded with feed water pipes, brine pipes, product water pipes and valves for cleaning, etc.

3) Flushing pump

Flushing is done so that the concentrated brine retained in membrane vessels may be replaced with feed water when the RO control block is stopped.

Turbid and/or scale substances attached to membrane surface will be flushed out by pumps.

Flushing will be done under any of the following four conditions.

(1) RO control block is stopped.

(2) RO plant is emergency stopped.

(3) Flushing of RO control block is done arbitrarily while the block is in operation.

(4) By manual operation, flushing is done periodically one or two times per month.

c. Product Treatment

1) Decarbonator

The raw water fed to the RO module will be conditioned by acid dosing for keeping pH at about 5.5 - 6.0.

The CO_2 removal rate in the RO module is small as compared with HCO_3^- and pH of the product water of the RO module will become about 5.

The decarbonator will be provided to remove CO_2 remaining in the product water of the RO module. The value of pH of the decarbonator effluent will be about 6.

2) Decarbonated water Tank

The decarbonated water well will be installed under

the decarbonator tower, and be used as the suction well for the product water pumps.

3) Decarbonator fans

The decarbonator fan will be used to supply air to the decarbonator. The air flow will be twenty-two times the water flow by volume.

4) NaOH dosing equipment

NaOH will be used to adjust pH of the product water from the decarbonator to 8.0.

d. Product Pumps

1) Product water pumps

The product pumps will be used to transfer the decarbonated water to the product water tank.

2) Product service pumps

The product service pumps will be used to distribute the product water stored in the product water tank to the existing demineralizing plant.

e. Cleaning System

If the RO module scales, its production capacity will be decreased, and further, the product water quality may be degraded, the pressure loss may be increased, etc. For preventing these troubles, a SHMP solution and/or citric acid solution will be dosed.

f. Electrical and Instrumentation

For plant operation, control and monitoring.

- Boiler chemical feed systems including amine injection for neutralization of carbon dioxide, hydrazine addition for oxygen removal, and phosphate for prevention of boiler scaling.

- Auxiliary boiler steam system.

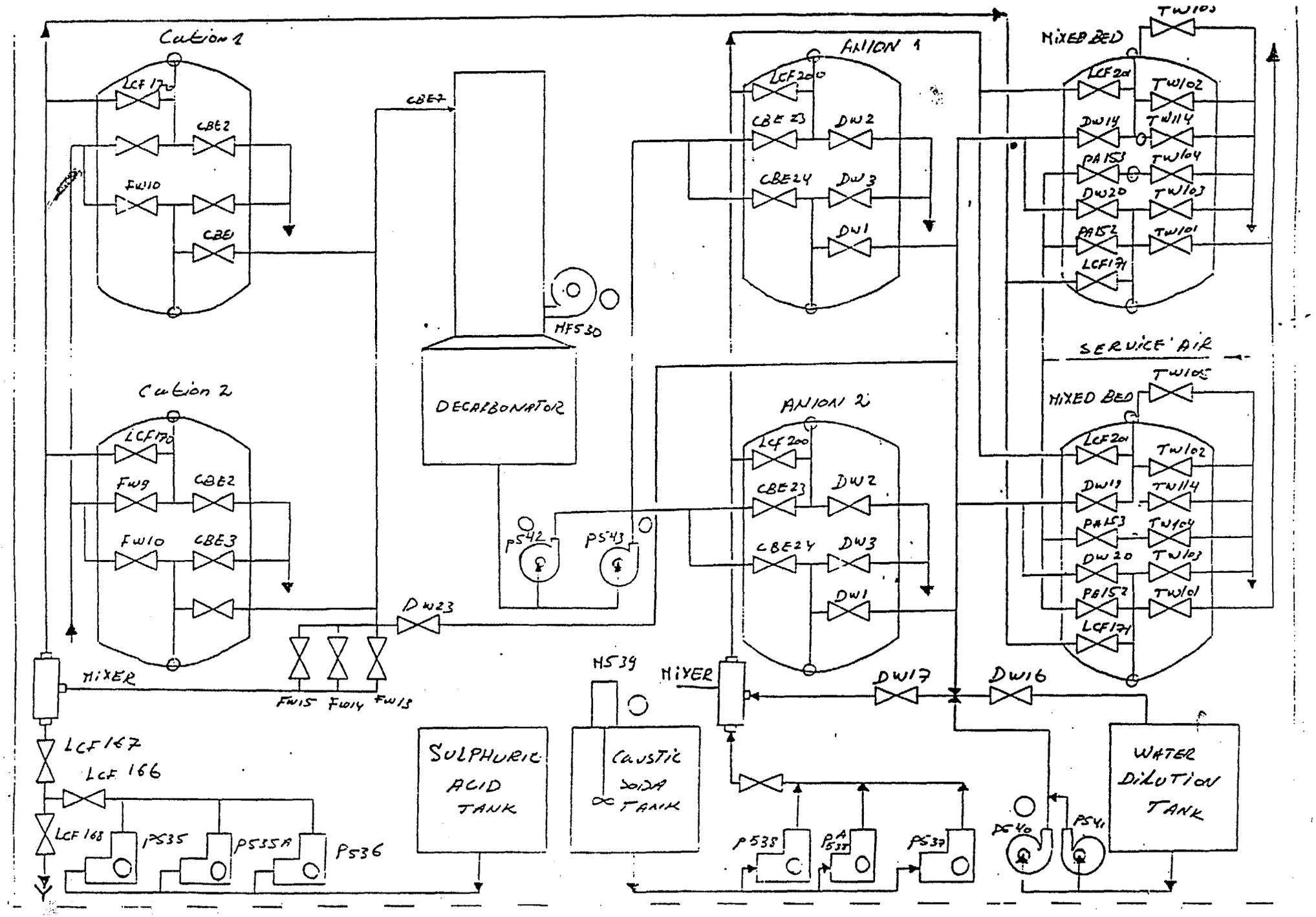
Cation 1
LCF 170
CBE2
FW10
CBE
CBE7
HF530
DECARBONATOR
Cation 2
LCF170
FW9
CBE2
FW10
CBE3
DW23
FW15
FW14
FW13
MIXER
LCF 167
LCF 166
LCF 168
PS35
PS35A
PS36
SULPHURIC ACID TANK
HS39
CAUSTIC SODA TANK
ANION 1
LCF200
CBE 23
DW2
CBE24
DW3
DW1
ANION 2
LCF 200
CBE23
DW2
CBE24
DW3
DW1
PS42
PS43
MIXER
DW17
DW16
PS38
PS37
PS40
PS41
WATER DILUTION TANK
MIXED BED
TW105
LCF201
TW102
DW19
TW114
PA153
TW104
DW20
TW103
PA152
TW101
LCF171
SERVICE AIR
MIXED BED
TW105
LCF201
TW102
DW19
TW114
PA153
TW104
DW20
TW103
PA152
TW101
LCF171

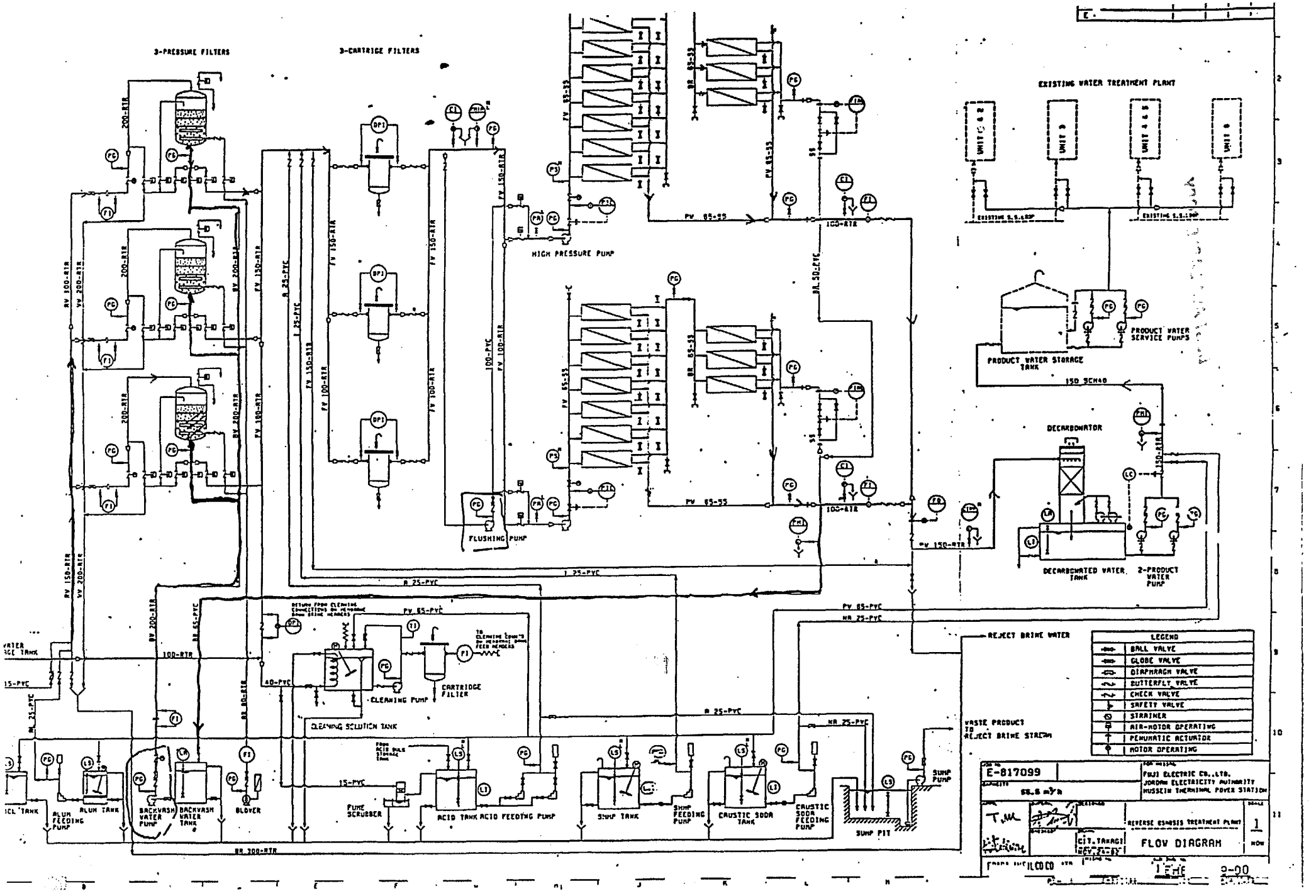
3-PRESSURE FILTERS
3-CARTRIDGE FILTERS
EXISTING WATER TREATMENT PLANT
UNIT 6 & 7
UNIT 3
UNIT 4 & 5
UNIT 1
HIGH PRESSURE PUMP
FLUSHING PUMP
PRODUCT WATER STORAGE TANK
PRODUCT WATER SERVICE PUMPS
DECARBONATOR
DECARBONATED WATER TANK
2-PRODUCT WATER PUMP
CLEANING PUMP
CARTRIDGE FILTER
CLEANING SOLUTION TANK
ALUM FEEDING PUMP
ALUM TANK
BACKWASH WATER PUMP
BACKWASH WATER TANK
BLOWER
FUME SCRUBBER
ACID TANK
ACID FEEDING PUMP
SUMP TANK
SUMP FEEDING PUMP
CAUSTIC SODA TANK
CAUSTIC SODA FEEDING PUMP
SUMP PIT
SUMP PUMP
REJECT BRINE WATER
WASTE PRODUCT TO REJECT BRINE STREAM
LEGEND
BALL VALVE
GLOBE VALVE
DIAPHRAGH VALVE
BUTTERFLY VALVE
CHECK VALVE
SAFETY VALVE
STRAINER
AIR-MOTOR OPERATING
PENUMATIC ACTUATOR
MOTOR OPERATING
E-817099
FUJI ELECTRIC CO.,LTD.
JORDAN ELECTRICITY AUTHORITY
HUSSEIN THERMAL POWER STATION
REVERSE OSMOSIS TREATMENT PLANT
FLOW DIAGRAM
CIT.TAKAGI
9-00

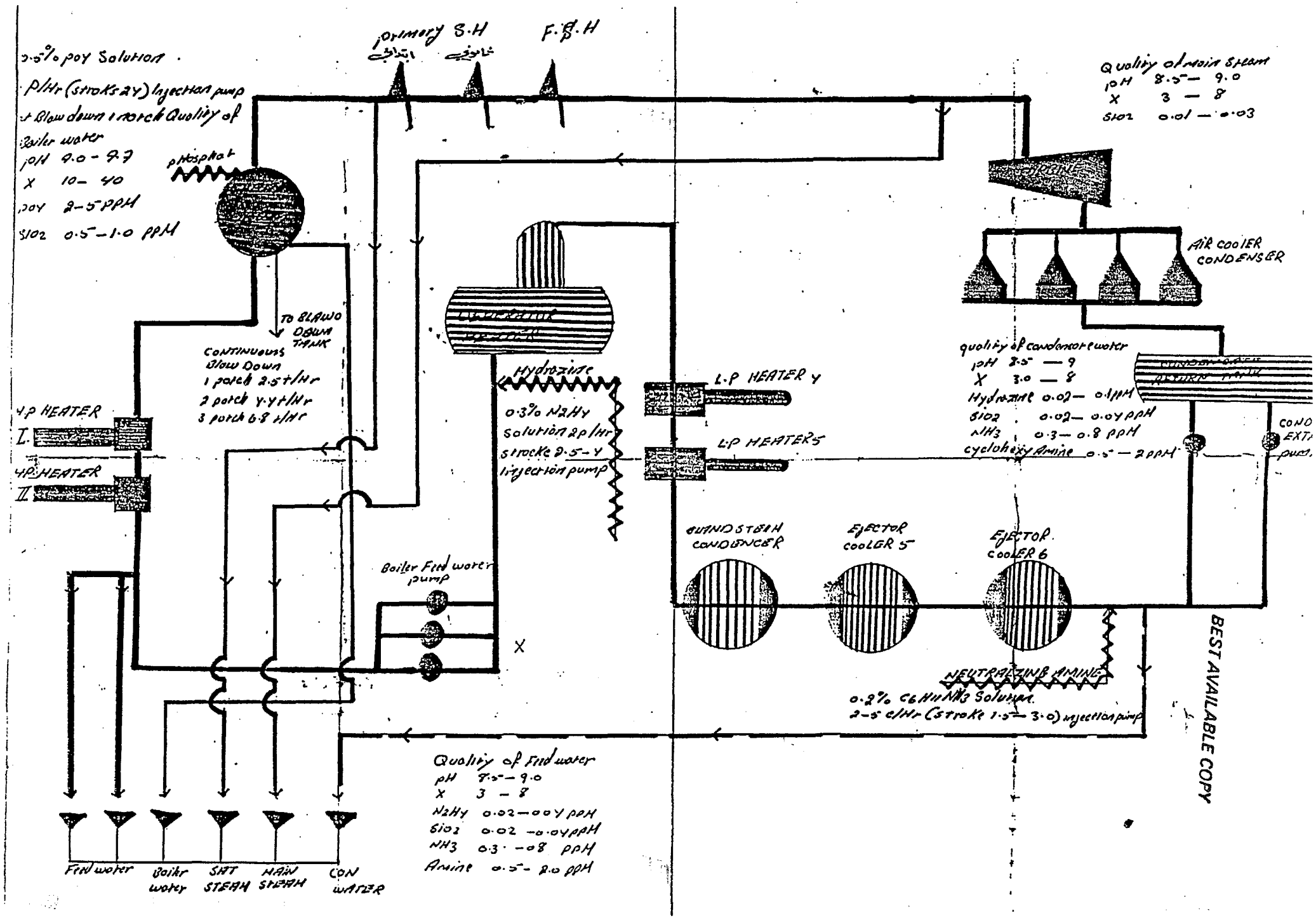

BEST AVAILABLE COPY

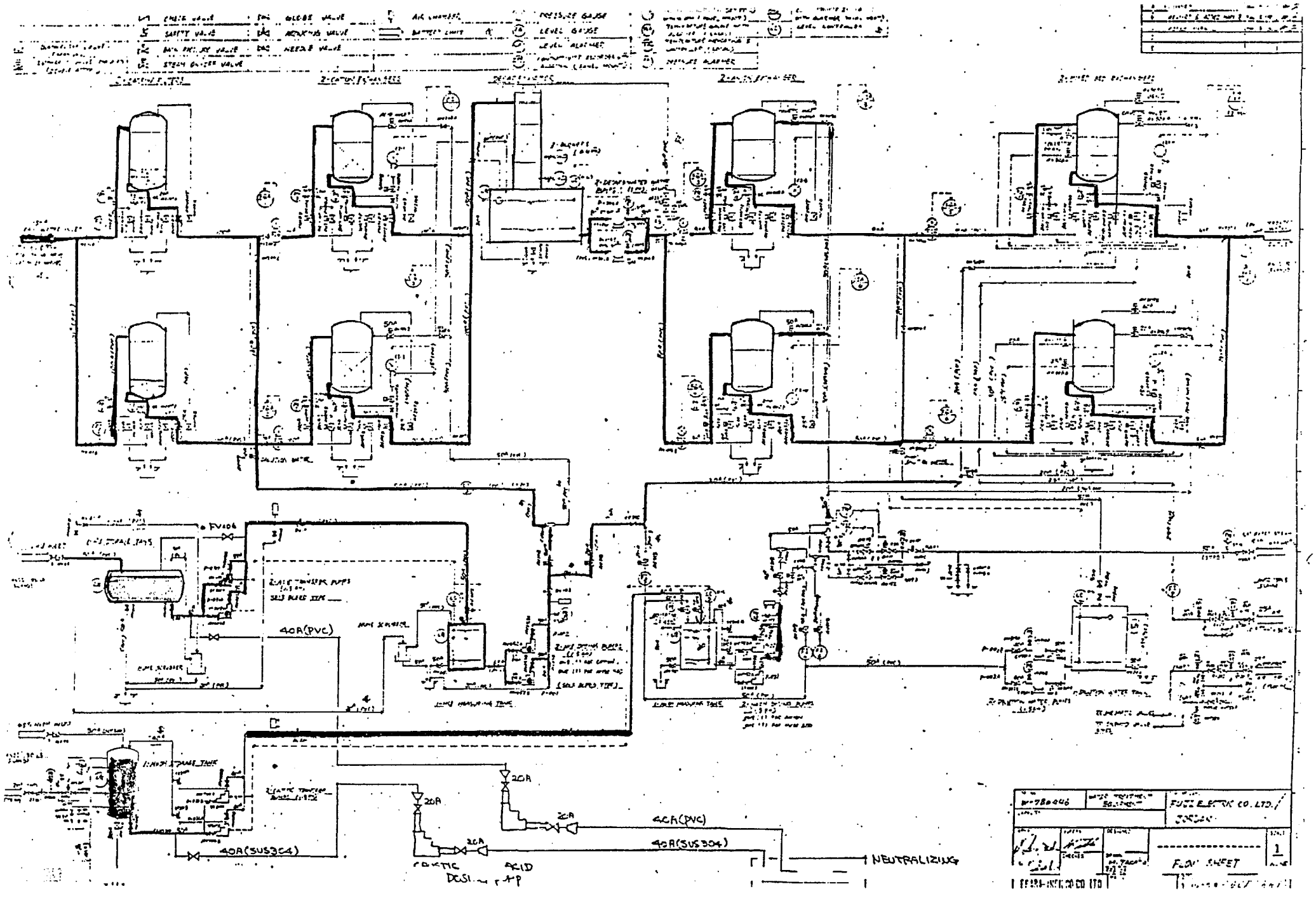

BEST AVAILABLE COPY

88

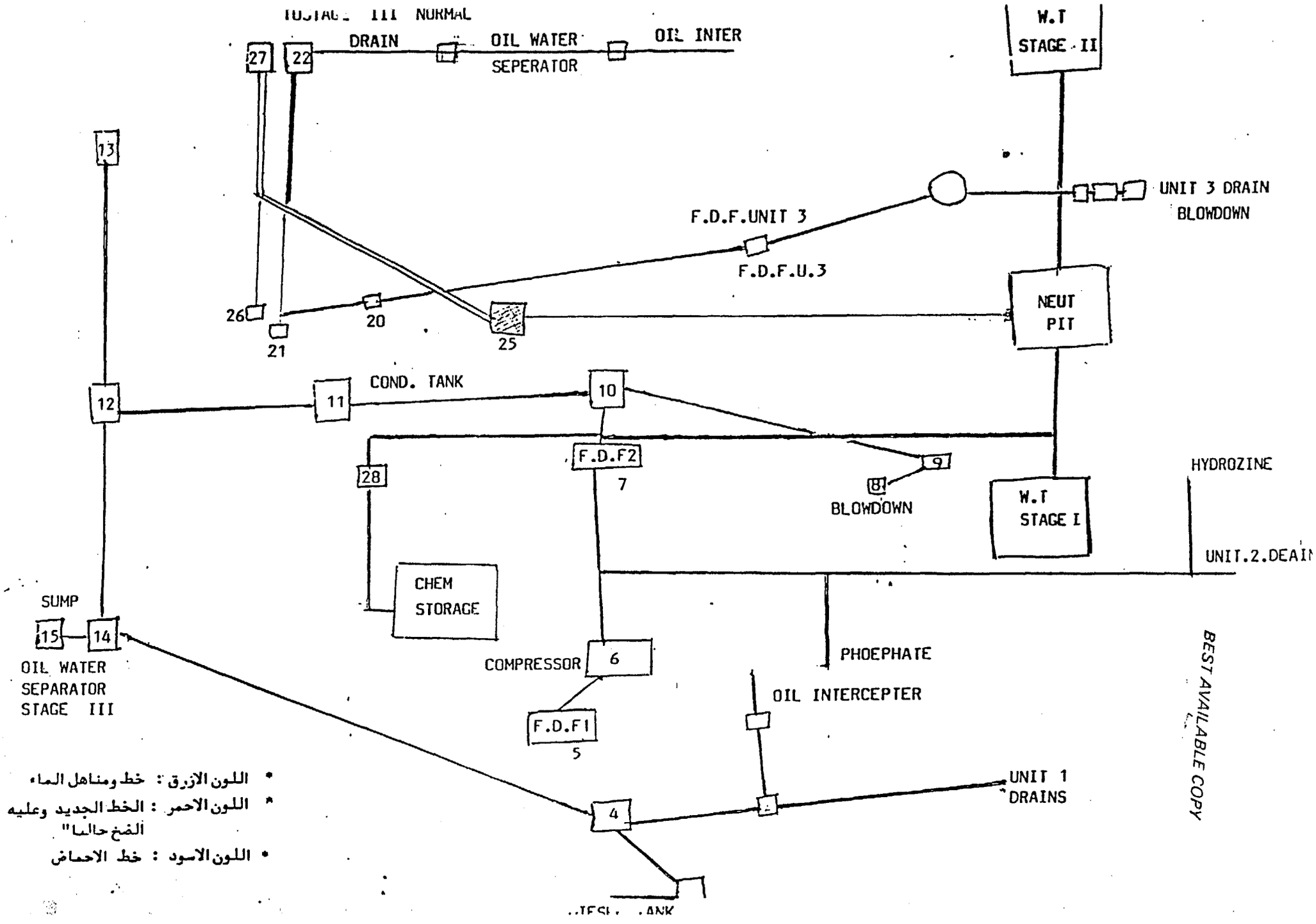

* اللون الازرق : خط ومناهل الماء
* اللون الاحمر : الخط الجديد وعليه الضخ حاليا"
* اللون الاسود : خط الاحماض

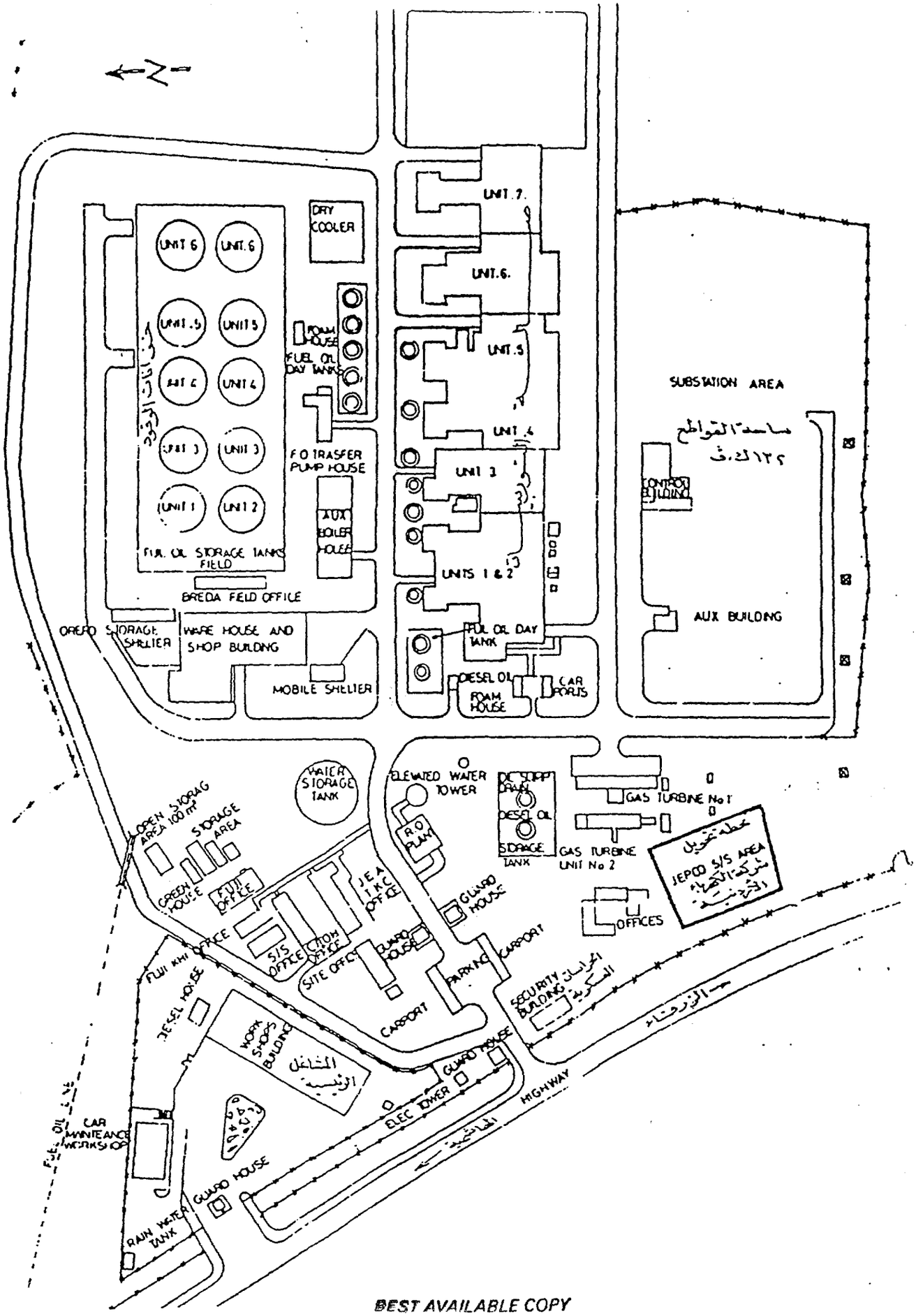

BEST AVAILABLE COPY

90

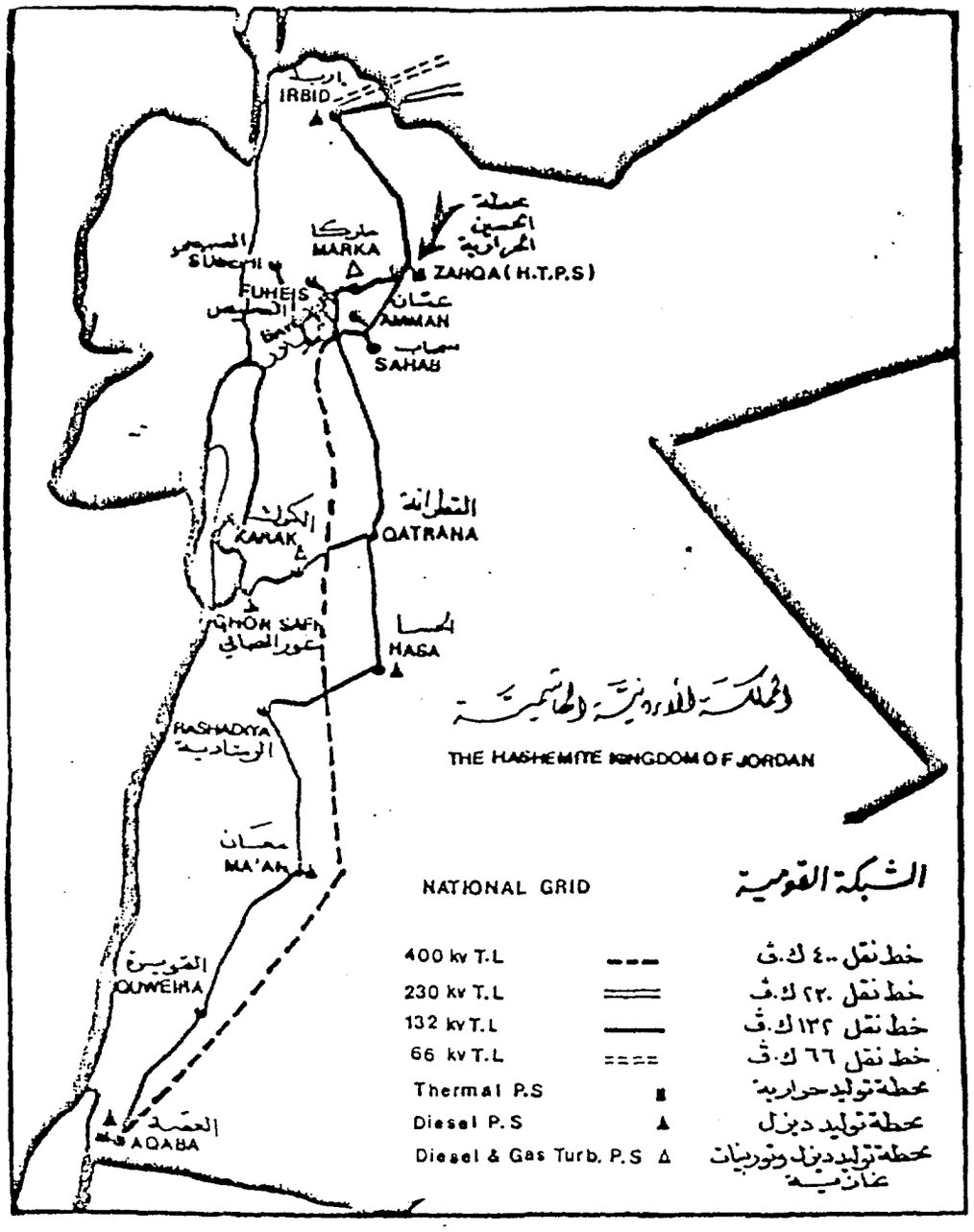

INTRODUCTION

The Jordan Electricity Authority (J.E.A.) is responsible for connecting the defferent areas of the Kingdom together in an integrated electric system , in order to meet the country's demand for electric power .

In the system , Hussein Thermal Power Station (H.T.P.S.) generates a big proportion of the Kingdom's electric power requirments .This Thermal Power Station is one of the biggest stations in the world to use the air cooled condensers .

LOCATION

* The location of Hussein Thermal Power Station (HTPS) was selected for the following reasons :-

  1) The presence of deep well water which is necessary for the operation of the boilers .

  2) It is adjacent to Jordan Petroleum Refinery , therefore, fuel delivery is easy and economical .

  3) It is located close to Jordan's main centre of population and industry .

* The construction of the first stage of HTPS started in 1973 .

* HTPS is divided into two parts , according to the prime movers of the generators :-

  1) Gas turbines (Two units) .
  2) Steam turbines (seven units) .

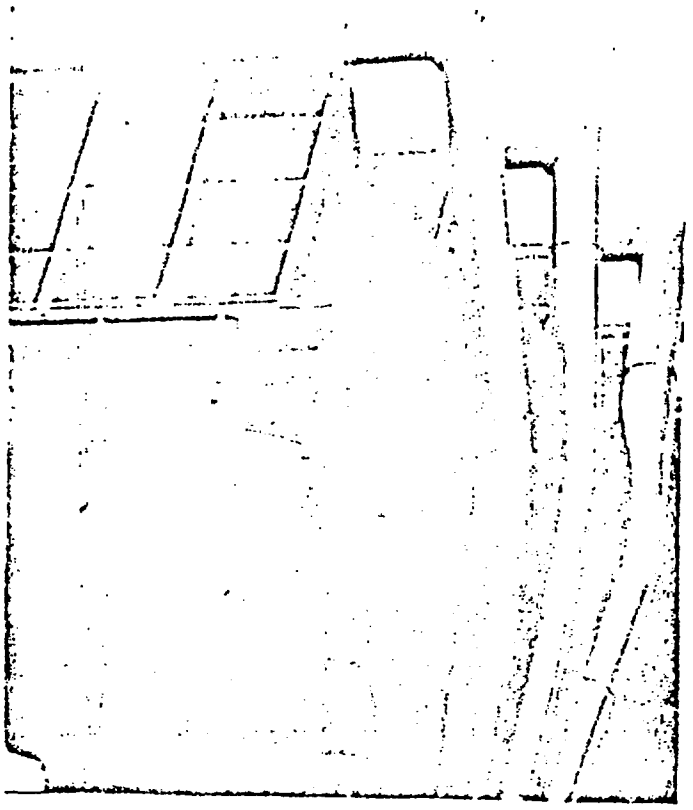

BEST AVAILABLE COPY

(4) STEAM UNITS (4x66MW)

BOILER

MANUFACTURER	Kawasaki Heavy Indust./Japan
TYPE	Natural circulation for water
STEAM FLOW	299 T/H
STEAM PRESSURE	94 Kg/Cm²
STEAM TEMPERATURE	515 C°
MAIN OIL	Heavy fuel oil No.(5)
STARTING OIL	Diesel Oil No. (2)
SPECIFIC FUEL CONSU.	260g /K.W.H.
NO. OF BURNERS	(6)
GAS AIR HEATER	Lungstrom

TURBINE

MANUFACTURER	Fuji Electric / Japan
CAPACITY	66MW
NO. OF STAGES	1 Impulse , 35 reaction
SPEED	3000 R.P.M.
STEAM CAPACITY	274.8 T/H
STEAM PRESSURE	87.89 Kg/Cm²
STEAM TEMPERATURE	510 C°
NO. OF EXTRACTION	(5)

GENERATOR

MANUFACTURER	Fuji Electric / Japan
CAPACITY	66 MW (77.65 MVA)
VOLTAGE	13.8 KV
POWER FACTOR	0.85 LAG.
SPEED	3000 R.P.M.

(3) STEAM UNITS (3x33MW)

BOILER

MANUFACTURER	Breda Thermomecanica/Italy
TYPE	Natural circulation for water, two drums
STEAM FLOW	159 T/H
STEAM PRESSURE	63 Kg/Cm²
STEAM TEMPERATURE	482 C°
MAIN OIL	Heavy fuel oi No.(5)
STARTING OIL	Diesel oil NO.(2)
SPECIFIC FUEL CONSU.	300 g/K.W.H.
NUMBER OF BURNERS	(4)
GAS AIR HEATER	Lungstrom

TURBINE

MANUFACTURER	DE-Pretto Escherwyss/Italy
CAPACITY	33MW
NO. OF STAGES	16 Impulse
SPEED	3000 R.P.M.
STEAM CAPACITY	154.9 T/H
STEAM PRESSURE	60.78 Kg/Cm²
STEAM TEMP.	482 C°
NO. OF EXTRACTIONS	(5)

GENERATOR

MANUFACTURER	Technomasio Italiano Brown Boveri/Italy
CAPACITY	33MW(38.825 MVA)
VOLTAGE	13.8 KV
POWER FACTOR	0.85 LAG.
SPEED	3000 R.P.M.

THE TECHNICAL DATA FOR THE GENERATION UNITS OF HTPS

(1) GAS UNIT NO. 1

MANUFACTURER	WESTINGHOUSE CANADA LTD.
CAPACITY	14.35MW
FUEL	NO.2 DISTILLATE OIL
NO. OF COMBUSTORS	(6) six
STARTING UNIT	DIESEL ENGINE 435 HP
COMBUSTION CYCLE	SIMPLE CYCLE ,
TURBINE SPEED	4830 R.P.M.
GENERATOR SPEED	750 R.P.M.
GENERATOR VOLTAGE	10 000 VOLT
POWER FACTOR	0.85 LAG.

(2) GAS UNIT NO. 2

MANUFACTURER	AEG-KANIS W.GERMANY
CAPACITY	20MW
FUEL	NO.2 DISTILLATE OIL
NO. OF COMBUSTORS	10
STARTING UNIT	DIESEL ENGINE 500 HP
COMBUSTION CYCLE	SIMPLE CYCLE ,
TURBINE SPEED	5112 R.P.M.
GENERATOR SPEED	3000 R.P.M.
GENERATOR VOLTAGE	10500 VOLT
POWER FACTOR	0.80 LAG.

STEAM CYCLE دورة البخار

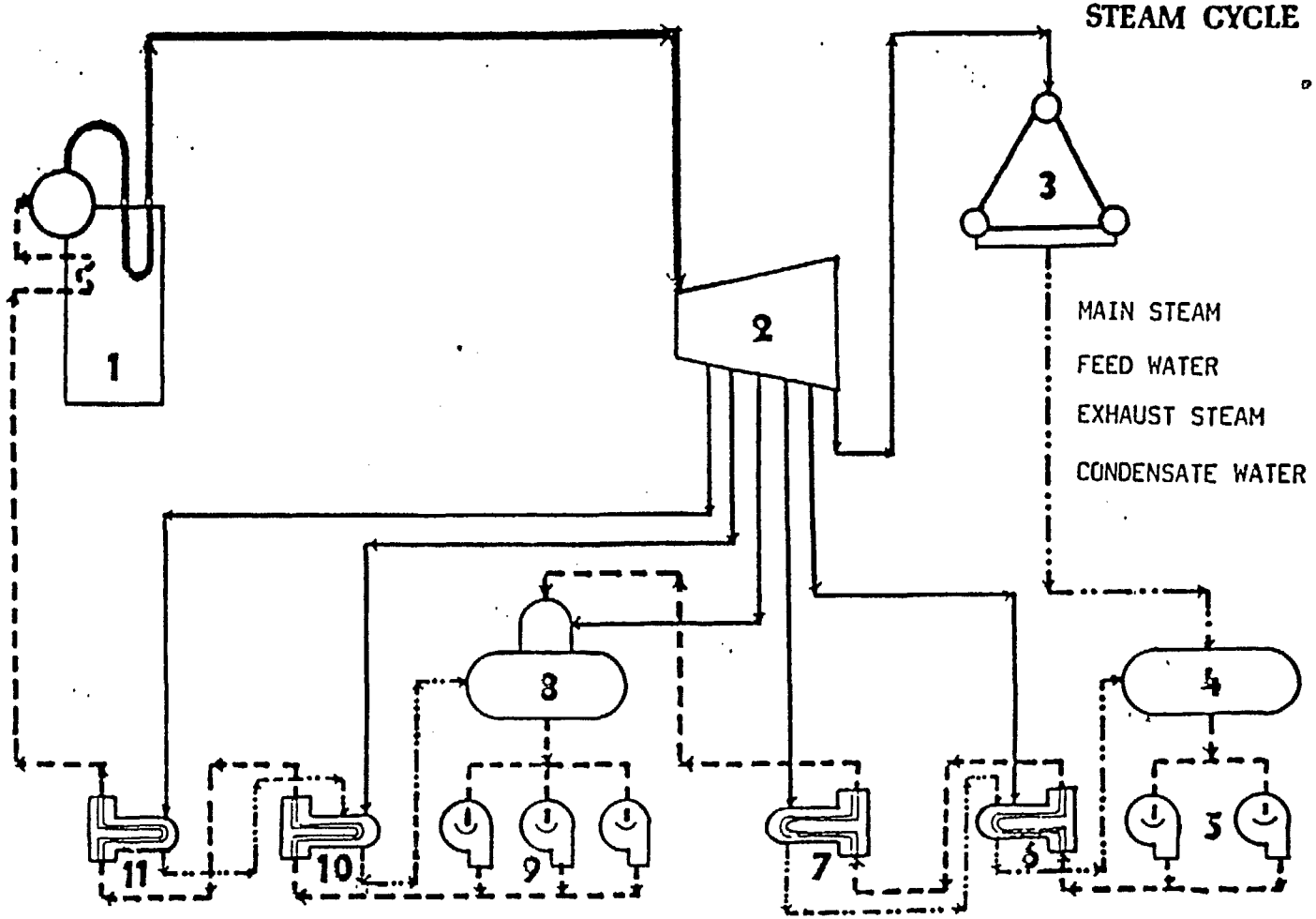

1. BOILER المرجل
2. TURBINE التوربين
3. AIR COOLED CONDENSER مكثفات البخار
4. CONDENSATE RETURN TANK خزان المياه المكثفه الراجعه
5. CONDENSATE EXTRACTION PUMPS مضخات استخلاص المتكاثف
6. LOW PRESSURE HEATER NO. 5 مسخن مياه الضغط المنخفض رقم ٥
7. LOW PRESSURE HEATER NO.4 مسخن مياه الضغط المنخفض رقم ٤
8. DEAERATING HEATER فاصل الغازات
9. FEED WATER PUMPS مضخات تغذية المياه للمرجل
10 HIGH PRESSURE HEATER NO. 2 مسخن مياه الضغط العالي رقم ٢
11 HIGH PRESSURE HEATER NO. 1 مسخن مياه الضغط العالي رقم ١

DATE OF FIRST SYNCHRONIZING

1st Gas Unit 14MW	5/5/1975
2nd Gas Unit 20MW	28/6/1976
1st Steam Unit 33MW	19/5/1977
2nd Steam Unit 33MW	23/6/1977
3rd Steam Unit 33MW	9/11/1978
4th Steam Unit 66MW	14/9/1981
5th Steam Unit 66MW	17/12/1981
6tn Steam Unit 66MW	6/5/1982
7th Steam Unit 66MW	21/10/1984

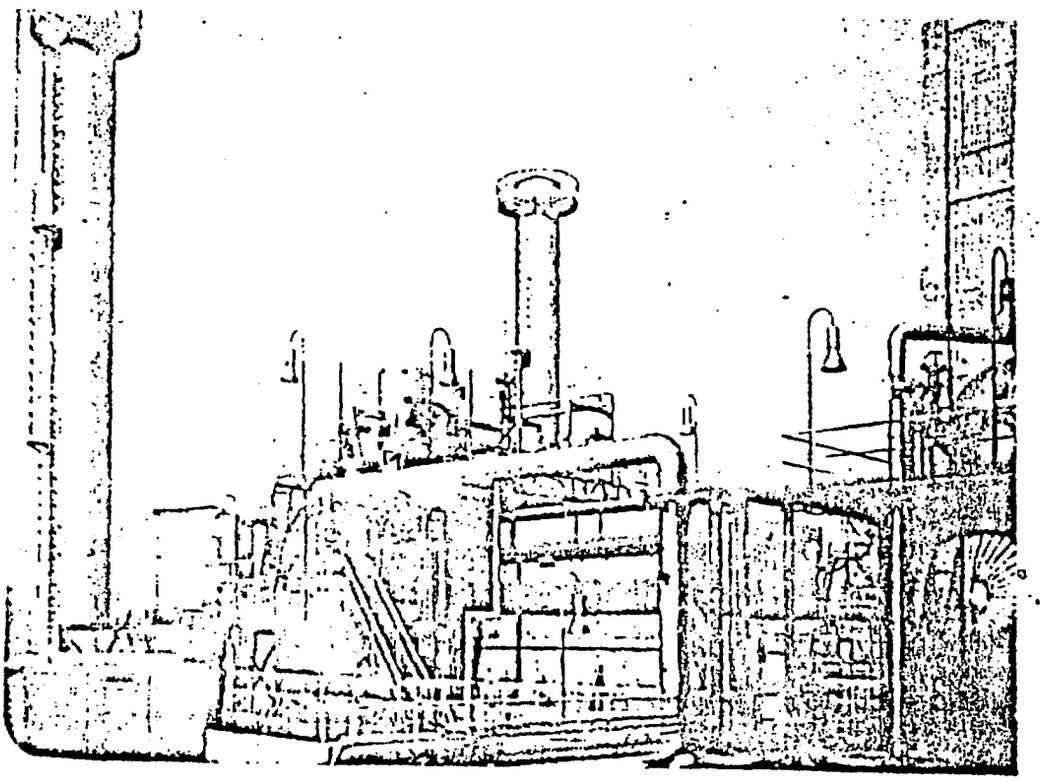

FINANCING

STAGE	FINANCERS
1st STAGE :-	
1 x 14 MW 1st Gas Unit 1 x 20 MW 2nd Gas Unit 2 x 33 MW 1st & 2nd Steam Unit	Kuwait fund World Bank Jordan Government
2nd STAGE :-	
1 x 33 MW 3rd Steam Unit	Arab Fund World Bank Jordan Government
3rd STAGE :-	
2 x 66 MW & 5th Steam Unit	Saudi Fund Kuwait Fund Arab Fund Jordan Government
1 x 66 MW 6th Steam Unit	Jordan Government
4th STAGE :-	
1 x 66 MW 7th Steam Unit	Jordan Government

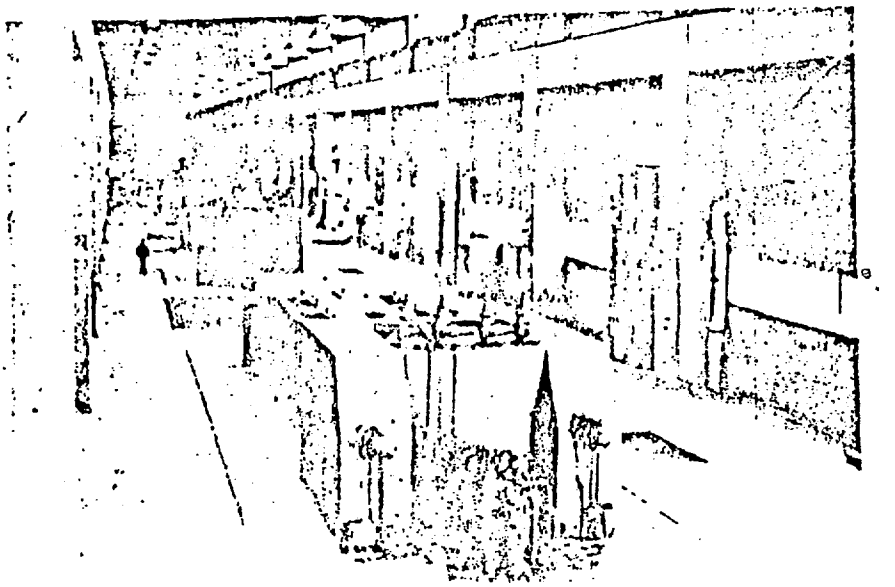

APPENDIX D

BACKGROUND MATERIAL REPORT

99

THERMAL ELECTRIC POWER PLANT INDUSTRY
BACKGROUND MATERIALS

INDUSTRIAL WASTEWATER DISCHARGE PREVENTION PROGRAM
WATER QUALITY IMPROVEMENT AND CONSERVATION PROJECT

Amman, Jordan

TABLE OF CONTENTS

1.0 INTRODUCTION 1
- 1.1 Background 1
- 1.2 Objectives 1

2.0 INDUSTRIAL OVERVIEW 3
- 2.1 Typical Processes of Steam Electric Power Plants 3
  - 2.1.1 Fuel Management 4
  - 2.1.2 Steam Production 4
  - 2.1.3 Steam Expansion 4
  - 2.1.4 Steam Condensation 4
  - 2.1.5 Electricity Generation 4
  - 2.1.6 Miscellaneous Operations 5
- 2.2 Alternative Power System: Combined Cycles 5
- 2.3 Wastes, Emissions, and Water Usage 5
  - 2.3.1 Fuel Management 5
  - 2.2.3 Steam Production 6
  - 2.3.3 Steam Expansion 7
  - 2.3.4 Steam Condensation 7
  - 2.3.5 Electricity Generation 8
  - 2.3.6 Water Treatment 9
  - 2.3.7 Miscellaneous Operations 9

3.0 THERMAL ELECTRIC POWER PLANT IN JORDAN 10

4.0 AREAS FOR POTENTIAL IMPROVEMENT 12
- 4.1 Pollution Prevention/Waste Minimization 12
  - 4.1.1 Water Treatment Wastes 12
  - 4.1.2 Flue Gas Desulfurization System Wastes 14
  - 4.1.3 NO_x Emissions 15
  - 4.1.4 Fly Ash 17
  - 4.1.5 Odor Problems 17
  - 4.1.6 General PP/WM Techniques 18
- 4.2 Water Conservation 18
  - 4.2.1 Flue Gas Desulfurization System Water Conservation 19
  - 4.2.2 Blowdown System Water Conservation 19
  - 4.2.3 Water Treatment System Water Conservation 20

100

TABLE OF CONTENTS (Continued)

4.2.4 Alternative Water Sources 20
4.2.5 General Water Conservation Techniques 20
4.3 Conclusions 21

5.0 REFERENCES 22

FIGURES

Figure 1 : Generalized Unit Process Diagram for a Typical Oil-Fired Steam Electric Power Plant

Figure 2: Generalized Waste and Water Diagram for a Typical Oil-Fired Steam Electric Power Plant

Figure 3: Al Hussein Thermal Power Station Site Plan

Figure 4: The Steam Cycle: Al Hussein Thermal Power Station

Figure 5: The Water Cycle: Al Hussein Thermal Power Station

1.0 INTRODUCTION

This document presents the materials collected as background information for a pollution prevention, waste minimization, and water conservation audit of Jordan's Al Hussein Thermal Power Station.

1.1 Background

Development Alternatives, Inc. (DAI) under a contract with the United States Agency for International Development (USAID) is performing an Industrial Wastewater Discharge Prevention Program (IWDPP) in Amman, Jordan. The IWDPP is one of the four components of the Water Quality Improvement and Conservation project, funded by the USAID. The IWDPP is being performed by DAI with full coordination between the Ministry of Water and Irrigation and the Amman Chamber of Industry. The IWDPP includes conducting audits, performing feasibility studies, and designing for demonstration activities at selected industrial facilities.

Pollution prevention and waste minimization (PP/WM) techniques are defined as any techniques to prevent or reduce waste generation by source reduction or recycling activities. These activities must reduce either the volumes or the concentrations of pollutants generated prior to treatment, storage, or disposal of the waste.

Based on a ranking methodology, the PP/WM Committee has selected ten industries with potential needs for PP/WM audits. One of these industries is the "thermal electric power plant." Harza Consulting Engineers and Scientists (Harza), Chicago/USA, has been retained by DAI to lead the PP/WM audit for this industry.

The purpose of these audits is to assist the industries in the Amman-Zarqa Basin to assess PP/WM problems and suggest alternative solutions to achieve desired levels of PP/WM, water conservation, and wastewater treatment under the following subtasks:

- Subtask 1.1 - Audit Coordination;
- Subtask 1.2 - PP/WM Background Materials Preparation;
- Subtask 1.3 - Pre-Investigation Meeting;
- Subtask 1.4 - Audit;
- Subtask 1.5 - Post-Inspection Meeting; and
- Subtask 1.6 - Audit Evaluation Report.

1.2 Objectives

In this document, background information has been assembled by performing a comprehensive literature review. The purpose of the literature review was to identify the available techniques and clean technologies being practiced for PP/WM and water conservation for the thermal electric power plant industry. To best address the industry practices in Jordan, the specific focus of the review is on the oil-fired steam electric segment of the industry.

The literature review included published literature and personal contacts with industry representatives and authorities. Persons contacted included researchers at the Massachusetts Institute of Technology, the United States Argonne National Laboratory, and the United States Environmental Protection Agency. The literature consisted of PP/WM related articles, industry journal articles and conference proceedings, power plant operations manuals, and books on pollution and controls.

Section 2.0 of this report provides a world-wide overview of the oil-fired steam electric power plant industry, while section 3.0 details the processes used at Jordan's Al Hussein Thermal Power Station. Section 4.0 describes areas for potential improvement in regards to PP/WM and water conservation. Finally, section 5.0 lists the main references consulted during the literature search. Copies of the appropriate sections of these references are provided under a separate cover.

2.0 INDUSTRIAL OVERVIEW

In this section, the processes and wastes, emissions and water usage of typical power plants will be presented. This will be compared to the Jordan Al Hussein Power Plant in the section entitled "Areas for Potential Improvement."

Steam electric power plants are production facilities of the thermal electric power industry. A steam electric power plant's product is electrical energy, and its primary raw materials are fuel, air, and water.

Currently, four fuels are used in a steam electric power plant: three fossil fuels - coal, natural gas, and fuel oil - and uranium, the basic fuel of commercial nuclear power. Reclaimed refuse is burned at some facilities, but is not likely to have a substantial impact on the industry within the foreseeable future. Jordan's largest power plant, the Al Hussein Thermal Power Station (HTPS), is primarily oil-fired. To best address the industry in Jordan, the focus of this report is on oil-fired steam electric plants and their water usage.

The commercial production of electrical energy requires the utilization and conversion of another form of energy. Present day steam electric power plants utilize the chemical energy of fossil fuels or the atomic energy of nuclear fuels to produce electrical energy in four stages. The first stage consists of burning the fuel in a boiler unit and converting water into steam with the heat of combustion. In the second stage the high-temperature, high-pressure steam enters a turbine where energy in the form of shaft work is removed; the turbine shaft is coupled to a generator which converts the mechanical energy into electrical energy. In the third stage the steam leaving the turbine is condensed to water (condensate), transferring heat to the cooling medium, which is typically water. Finally, the condensate is reintroduced into the boiler to complete the cycle.

2.1 Typical Processes of Steam Electric Power Plants

In this section, the major components of a typical power plant and the processes within those plants are briefly discussed.

Five major unit processes are associated with the four production stages of a steam electric power plant:

(1) The storage and handling of fuel related materials both before and after use;
(2) The production of steam;
(3) The expansion of the steam in a turbine which drives the electricity generator;
(4) The condensation of the steam leaving the turbine and its return to the boiler; and
(5) The generation of electrical energy from the rotating mechanical energy.

In addition, other miscellaneous operations, such as plant sanitation and water treatment, are associated with power plants. The unit processes are described for a typical oil-fired plant in the following subsections and illustrated in Figure 1, "Generalized Unit Process Diagram for a Typical Oil-Fired Steam Electric Power Plant."

2.1.1 Fuel Management

Three types of fuel oil are used in utility power plants: crude oil, distillate oil, and residual oil. Fuel oil must be delivered to the plant site, stored until used, combusted in the plant boiler, and the residual and spent fuel oil material stored on the premises or removed.

2.1.2 Steam Production

The heat produced by the combustion of fuel oil with air is transferred to water by radiation and convection to produce high-pressure steam. For maximum thermal efficiency the following steps are typically required, at a minimum.

First, high purity feed water enters the boiler through a series of tubes near the point where hot gases exit from the boiler. There it is heated to near the boiling point. Then the heated water flows to one or more drums connected by a number of tubes. The tubes are arranged in rows along the walls of the boiler. The water flows through the tubes and is vaporized to saturated steam by the radiant heat of combustion. The saturated steam is then further heated, primarily by convection of the hot gases. Finally, the gases are passed through a heat exchanger in order to preheat the air being blown into the boiler for fuel combustion.

2.1.3 Steam Expansion

The steam produced in the boiler is expanded in the turbine to produce mechanical energy by flowing through a succession of passages made up of blades mounted on alternately rotating and stationary discs. As the steam passes from disc to disc, it gives up its energy to turn the rotating blades and in the process loses pressure and increases in volume.

2.1.4 Steam Condensation

Steam electric power plants use a condenser to maintain a low turbine exhaust pressure by condensing the steam which is leaving the turbine, and then recovering the condensate for return to the boiler. Alternatively, the spent steam could be released directly to the atmosphere, thus avoiding the requirement for condenser systems. This would result in poor cycle efficiency and a requirement of large quantities of high purity boiler feed water.

The cooling medium supplied to condensers is typically water, but is sometimes air. The condenser system may have extensive auxiliary systems associated with it to release the heat absorbed by the cooling medium before discharging the medium to the environment. A common example is the evaporative wet cooling tower. Heated cooling water cascades down the open-air tower to release its heat to the atmosphere before discharging to a receiving water body or recycling to the condenser.

2.1.5 Electricity Generation

The actual generation of electrical energy is accomplished in a generator, usually directly connected to the turbine. The generator consists of a rotating element called a rotor revolving in a stationary frame. During the revolutions, electric current is generated and output for transmission.

2.1.6 Miscellaneous Operations

Power plant miscellaneous operations include sanitary and laboratory operations, general housekeeping, and construction activities.

2.2 Alternative Power System: Combined Cycles

Steam turbines are combined with gas turbines in what's known as a combined - cycle power plant. High temperature exhaust from the gas turbine produces steam in a heat-recovery steam generator. Usually several gas turbines are combined with a steam turbine because the commercial sizes are less than 200 MW.

The combined cycle is probably the most efficient commercial power system available. Most are fueled by natural gas or fuel oil. Fuel to power efficiencies are nominally 45% and could top 50%. Reheat is being applied in units as small as 10 MW. The small generators may even operate at the supercritical steam conditions of some of the large power plants. These systems tend to be more environmentally compatible.

Today, environmental considerations usually bear directly on steam-turbine design. More efficient units mean lower environmental impact/unit of power produced.

2.3 Wastes, Emissions, and Water Usage

The following sections describe the typical waste streams and water requirements associated with each unit process in an oil-fired steam electric plant, as indicated in the literature. The waste streams and water requirements are organized according to the six unit processes described above: fuel management, steam production, steam expansion, steam condensation, electricity generation, and miscellaneous operations. When the waste streams or water requirements are associated with more than one unit process, they have been categorized in the process in which they are first generated or are most significant. The streams are illustrated in Figure 2, "Generalized Waste and Water Diagram for a Typical Oil-Fired Steam Electric Power Plant."

2.3.1 Fuel Management

The fuel management unit process includes the transport, storage, and handling of fuel oil. Oil spills during this operation can result in significant power plant waste streams and water consumption. Spillage and subsequent washdown can contaminate the plant drainage system and consume large volumes of water.

Conventional power plants get their energy typically from:

A) Fuel oil
B) Gas
C) Coal
D) Nuclear
E) Geothermal

Fossil fuel combustion products can be a significant fuel management waste. Fossil fuel combustion results in gaseous products, called flue gas, and non-gaseous, non-combustible residues called ash. A portion of the ash is carried along with the flue gas. This portion is called fly ash. The remainder of the ash settles to the bottom of the furnace and is called bottom ash. The amount and characteristics of each type of ash produced depends on the type of fuel and boiler. Coal produces a relatively large amount of both ashes, while oil produces little bottom ash but more fly ash, and gas produces little of either ash.

Ash contains the non-combustible constituents of the fuel, many of which may be toxic. For example, fuel oil fly ash may contain vanadium and other noncombustible and potentially toxic chemicals that may have been in the oil. Fly ash is typically removed from flue gas by means of mechanical dust collectors or electrostatic precipitators. If the fly ash is to be used in the manufacture of pozzolanic material or another commercial use, it is generally collected dry and handled with an air conveyor. If it is to be disposed of in an ash pond or settling basin, it is sluiced hydraulically.

Scrubbers are typically installed on plants burning fuel containing sulfur to remove sulfur oxide emissions, as well as fly ash, from the flue gas. Sulfur oxides are harmful when released to the atmosphere because they can cause lake acidification when dissolved in rainwater and can cause human respiratory problems. Scrubber sludges are typically dewatered, fixated, and landfilled.

Nitric oxide and nitrogen dioxide, or NO_x, are also air pollutants that may be present in the flue gas. NO_x is formed during combustion in three ways: the nitrogen content of the fuel is oxidized; the nitrogen content of the air is oxidized at high temperature; and intermediate hydrocarbons present in the combustion flames are oxidized. As a pollutant, NO_x is thought to be harmful as a contributor to so-called acid rain and as a greenhouse gas. At low elevations, nitric oxide also reacts with sunlight to create smog. NO_x is typically removed from the flue gas by improving combustion time and temperature control techniques.

2.2.3 Steam Production

Combustion efficiency depends largely on the cleanliness of the boiler heat transfer surfaces. Cleaning of this equipment usually requires strong chemicals to remove fuel residues and metal oxides and scales formed on these surfaces. The cleaning is not successful unless the surfaces are cleaned to bare metal, and this means that some metal (such as copper or iron) must be dissolved in the cleaning solution. The chemicals used

for cleaning are typically acids, alkalis, and chelating compounds. The cleaning agents and dissolved metals typically are collected and treated to remove metals.

Power plants are usually designed to recycle condensed steam for boiler feedwater as a means of conserving water. Efficient plant operation requires boiler feedwater to be highly pure. However, dissolved solids concentrate in the recycled condensate as a result of evaporative water loss. To maintain total dissolved solids below allowable limits for boiler operation, a controlled amount is sometimes bled off. This volume, called boiler blowdown, is treated as wastewater and must be replaced with high purity make-up water.

Water treatment for make-up water has typically included suspended solids and hardness removal, scale and corrosion control, and demineralization. Suspended solids removal usually requires such operations as clarification and filtration. Hardness removal is typically accomplished by lime-soda softening, which requires the addition of lime and caustic soda. Ammonia and phosphate are typically added for corrosion control. Demineralization usually involves ion exchange and membrane processes, such as reverse osmosis. Residues of all of these processes may flow to the wastewater treatment system along with the rejected brine water. The treatment sludges are typically landfilled.

2.3.3 Steam Expansion

There are no major chemical effluents or water use requirements associated with the steam expansion process. However, the significance of the process lies in its effect on plant efficiency and, therefore, on the thermal discharge. When a water-steam cycle is used to convert steam heat to the mechanical work of the turbines, the maximum theoretical efficiency that can be obtained is limited by the difference in temperatures at which the heat can be absorbed by the steam and discarded after passing through the turbines. Thus to achieve any degree of power plant efficiency, it is inevitable that heat must be discharged from the plant to some compartment of the environment.

Heat discharged to the environment can be a pollutant due to its potentially negative effect on ecosystems, particularly aquatic ecosystems. Temperature determines those species that may be present in an ecosystem. It activates the hatching of young, regulates their activity, and stimulates or suppresses their growth and development. Temperature also attracts organisms, and may kill them when the water becomes too hot or becomes chilled too suddenly. Warmer water generally accelerates activity and may be a primary cause of aquatic plant nuisances when other environmental factors are suitable. Therefore, thermal discharge is a significant pollutant when heat is transferred to water, as in water cooled condensers which are described in the following section.

2.3.4 Steam Condensation

Condensers and cooling towers are key equipment in the power plant's circulating water system. The steam condensation process can produce significant water demands and wastes if water cooled condensation is employed. Air cooled condensers do not require water or generate wastewater, but have a very low cooling efficiency. A water cooled

system is illustrated in Figure 2.

The two most common types of water cooled systems are once-through and closed-loop, the main difference being that once-through systems consume more water than do closed-loop systems. Once-through systems take cooling water from a natural source, pump it through the condenser, and discharge the heated cooling water to the same body of water from which it was drawn. The water temperature rise can be a disruptive pollutant to the ecosystem of the water body.

In addition to thermal pollution, once-through systems may also pollute receiving waters with chemical residue. Chemicals may be added to the cooling water before it enters the condenser to prevent or minimize scaling, corrosion, and fouling in the condenser pipes. Chemicals added typically include phosphate, lime, chromium, aluminum, and zinc. It is also common practice to add some type of biocide, including chlorine, to the water to control the growth of slimes. Residues of these chemicals will be discharged from the condenser with the cooling water.

If sufficient water for a once-through system is not available, cooling water must be recirculated within the plant in a closed-loop condenser. Closed-loop water cooled condenser systems employ some form of cooling device, such as an artificial pond or a cooling tower, as an intermediate device to transfer waste heat to the atmosphere. The relatively cool water can then be recirculated in the condensers.

In addition to increased water conservation, closed-loop systems also effectively eliminate the problem of thermal pollution to aquatic ecosystems since they transfer waste heat to the atmosphere instead of to a water body. Closed-loop condenser systems include mechanical draft, natural draft, and fan-assisted natural draft wet and dry cooling towers, cooling ponds, and spray ponds.

Although closed-loop systems do not require as great a quantity of feedwater as do once-through systems, they are not completely "closed." A make-up water system is required to replace the circulating water lost through blowdown, evaporation, liquid carryover (drift), and leakage. Circulating water blowdown is required periodically for demineralization, as is boiler feedwater blowdown, even though circulating water is not required to be of as high of purity as is boiler feedwater. Like the once-through system cooling water discharge, the blowdown may contain water treatment chemical residues. The blowdown is typically treated as wastewater.

Cooling towers are installed to avoid thermal pollution of natural bodies of water, or to assure adequate cooling in "water short" areas. The three types of towers are: wet (evaporative), dry and combination wet/dry designs. Wet towers, the usual choice, are further divided into natural-draft and mechanical draft. Dry cooling towers have attracted attention lately, especially in "water-short" locations like Jordan. They are less expensive to maintain than wet towers, which require chemical additives and periodic cleaning because of the presence of water. In contrast to conventional cooling, the air-cooled condenser has no plume or blowdown. Also, rising activity in cogeneration has sparked

interest in dry cooling. Cogeneration plants often tap the thermal energy, usually in the form of steam, at an already existing facility. Finally, use of dry cooling permits plant sitting without regard for large supplies of cooling water. The disadvantage with dry cooling though is the decrease in thermal efficiency relative to the wet cooling.

Cooling towers have become a staple of plant operation in place of once-through cooling. Zero discharge is the next phase, which means tower blowdowns will be cleaned and the water reused; an expense that makes wet/dry and dry towers more attractive than wet ones.

2.3.5 Electricity Generation

Mechanical energy is converted to electric energy at almost 100% efficiency, and, therefore, produces an insignificant amount of waste heat. No other waste streams or water requirements are attributed to this unit process.

2.3.6 Water Treatment

Underlying most turbine corrosion problems are effects that tend to concentrate impurities. Therefore, impurity levels in feedwater and steam must be kept down to a few ppb. Control of impurity sources, compatible system design and materials, adequate treatment to remove impurities and proper sampling and chemical analysis are essential to corrosion control. There is general agreement that monitoring and analysis should be done at many points of the water/steam cycle and that impurities must be limited to a few ppb. Water treatment will include adding chemicals such as phosphates and caustic to give better alkalinity control. The most important water treatment of course is the removal of impurities with ion exchange, media filtration and reverse osmosis.

2.3.7 Miscellaneous Operations

Miscellaneous operation waste streams and water requirements are primarily those generated from sanitary, laboratory, housekeeping and construction operations. The wastewaters, which include floor drain and sump discharge, rainfall runoff, and spills and leaks, are discharged to the sewer. The solid wastes, like most plant wastes, are typically disposed of in a landfill or ponding operation.

3.0 THERMAL ELECTRIC POWER PLANT IN JORDAN

The Al Hussein Thermal Power Station (HTPS), owned and operated by the Jordan Electricity Authority, is the largest power plant in Jordan. This facility is the focus of the thermal electric power plant audit. The information assembled in this section is limited to that available to Harza in Chapter 19 of the COWIconsult and Royal Scientific Society manual titled Industrial Pollution Control Project, Jordan, Project Component No. 2: Industrial Wastewater Pretreatment Requirements.

HTPS was constructed and upgraded during the years 1973 to 1984. The plant has four fuel oil-fired burners with a total rated capacity of 363 MW plus four standby diesel turbines with a total capacity of 32 MW. The plant is located immediately southeast of the town of El Hashimiya, which is three km northeast of Zarqa. The plant is less than one km east of the Jordan Petroleum Refinery and 6 km southwest of the As Samra Wastewater Treatment Plant. The surrounding area is densely populated.

A plan of the HTPS site showing the main production facilities, oil storage facilities, and buildings is provided as Figure 3. A schematic of the facility's steam cycle is shown in Figure 4, and the water cycle is shown in Figure 5. A significant way that these schematics differ from Figure 2, the waste and water schematic for a typical plant, is that they do not include a water cooled condenser system. Instead, to conserve scarce water, the HTPS condensers are air cooled, dry systems.

Raw water for the plant is drawn from five deep wells at a combined rate of 100 cubic meters per hour. The water is used as a coolant for bearings and other equipment, as boiler feedwater, and for various plant services, including water supply for the HTPS housing estate. The water used to cool equipment is recirculated through a cooling tower.

The raw water is highly saline: an average of 2,200 mg/l total dissolved solids, and increasing over time as the water table drops. To be purified for use as boiler feedwater the water is treated in a two-stage reverse osmosis plant and in an ion exchange plant. The reverse osmosis reject water and the ion exchange regeneration water are discharged to the facility process wastewater treatment plant. All other process wastewater, such as cooling tower blowdown, is discharged to the treatment plant as well. In addition to being saline, the process water contains oil residues, usually from leaking lubricating oil, spilled fuel oil and leaking fuel oil.

The process wastewater treatment plant basically consists of an equalization tank and an oil separator. The effluent either goes to the sewer connected to the As Samra Wastewater Treatment Plant or, generally during the dry season, to irrigation of trees in a green area outside the power plant. Following treatment in a septic tank, sanitary wastewater effluent is also discharged to the sewer or to irrigation.

The wastewater effluent parameters do not exceed sewer system limits, but often do exceed irrigation standards, particularly in regards to salinity (2000 mg/l). The two primary sources of salinity in the plant wastewater are the raw water salinity and the ion exchange plant chemicals: about 1,100 kilograms of hydrochloric acid and sodium hydroxide are used daily for regeneration

112

of the ion exchange units.

HTPS may be modified in the future to separate the reverse osmosis unit, ion exchange unit, and cooling tower blowdown saline streams. These saline streams may instead be pumped to a brine deep-well injection pumping station. Also, the capacity of the reverse osmosis plant may be increased to reduce the use of the ion exchange unit. The consumption of hydrochloric acid and sodium hydroxide would, therefore, be reduced significantly.

The plant had experienced excessive soot formation in the flue gas, apparently due to a combination of inefficient combustion and the use of fuel oil with a high ash and sulfur content. After introduction of a fuel additive containing manganese oxide, most soot problems appear to have been solved. However, high sulfur emissions does remain a serious air pollution problem. This sulfur as $S0_2$ is not only an odor problem, but a health and environmental problem as well.

No other information regarding the HTPS was available to Harza at the time this report was written. For example, Harza does not have documented information on HTPS oil storage, plant spills and leaks, floor drain discharges, storm water runoff, ash sluice water, or flue gas scrubber wastes.

4.0 AREAS FOR POTENTIAL IMPROVEMENT

Beyond assembling background information regarding thermal electric power plants, the primary purpose of this document is to present information gathered from the literature search regarding the latest advances in pollution prevention, waste minimization (mainly for water), and water conservation.

The subjects can be defined as follows:

> Pollution prevention and waste minimization (PP/WM): reducing the volume or concentration of air, water, and solid waste discharges from a facility. PP/WM can be accomplished by implementing process improvements to actually reduce the amount of wastes generated or by developing a beneficial reuse for the waste and transforming it into a marketable by-product.
>
> Water conservation: reducing the process, clean-up, and domestic water use requirements of a facility.

The PP/WM has been defined in general. The focus of this project will be on water, but, air and solid wastes will be mentioned secondarily. The PP/WM will include source reduction, in-process recycling, clean technology, raw material substitution and preventative maintenance. The following sections present state-of-the-art techniques identified as areas for potential improvement at the Al Hussein Thermal Power Station. The improvements have been categorized in the following sections according to their goal: PP/WM or water conservation. In cases where an improvement may accomplish more than one goal, it is listed in the category in which it would be expected to have the greatest impact.

Because the focus of this report is on state-of-the-art technology, information regarding the more mature technologies have been omitted which are typically standard at power plants, i.e. electrostatic precipitators to reduce air emissions. Also, the areas for improvement listed are only suggestions for a typical oil-fired plant; their applicability and net benefit to the Al Hussein Thermal Power Station depends on plant specific factors.

4.1 Pollution Prevention/Waste Minimization

All state-of-the-art PP/WM opportunities identified in the literature for oil-fired power plants apply primarily to the fuel management process, particularly to the reduction of NO_x air emissions. However, techniques that apply to water treatment systems and general facility operations have also been documented.

4.1.1 Water Treatment Wastes

Ozonation and the reuse and/or improvement of ion-exchange resins are two state-of-the-art techniques for minimizing water treatment wastes that have been documented in the literature.

Ozonation: The use of ozone as a sole treatment for water is emerging as a reliable alternative to traditional multi-chemical treatment methods because it; (A) effectively controls scale, corrosion, and biogrowth, (B) conserves water, and (C) eliminates the use, storage, and discharge of otherwise necessary treatment chemicals. Ozonation is, however, energy intensive.

An allotrope of oxygen, ozone is the strongest commercially available oxidizing agent. Unlike chlorination, ozonation produces no residual. Instead, ozone has a very short half-life in water (measured in minutes), with simple O_2 as its decomposition product. Ozone is not stored for later use; it is immediately injected into the treated water as it is produced on-site by an ozone generator. The raw materials needed for generating ozone are air and electrical energy.

Ion-Exchange: The disposal of ion-exchange resins used for process water demineralization is a growing concern. However, because spent ion-exchange resins typically retain at least half their original capacity, they can be reused in applications other than demineralization.

For example, the resins can be beneficially applied to soil. Adding spent ion-exchange resins to soil improves its cation-exchange capacity, thus enhancing the soil's ability to retain fertilizer. The benefits are magnified during periods of rain and irrigation. At these times, soil nutrients are lost through leaching into groundwater and through runoff. Because soils have little or no natural ion exchange capacity, these losses can be excessive. Plants are unable to absorb nutrients as fast as they leach from the soil. Farmers, in turn, add more fertilizer to replace that lost to runoff or leaching. Adding spent ion exchange resins to cultivated soil helps overcome this cycle of waste. The resins act like a huge sponge that can retain nutrients until they are needed by the plants. However, it must be noted that these highly cross-linked-polymer resins are essentially non-biodegradable.

Sybron Chemicals of Birmingham, New Jersey, has developed a series of ion-exchange resins designed to improve water demineralization system performance and reduce chemical waste. The resins are characterized by excellent physical strength as well as high capacity and regeneration efficiency.

Techniques for Wastewater Treatment: The cooling water waste and contaminated process water wastes can be treated by many different methods:

- Isolate and separately treat waste streams, i.e. oily water from clean brines and domestic wastes.
- Reuse treated irrigation water in the processes.
- Direct reverse osmosis and ion exchange and filtration backwash for separate treatment.
- Treat and reuse condensates.
- Evaluate use of Wadi water as non-contact, one pass cooling water.
- Minimize washdown water usage and detergent additives.

- Consider treating domestic waste onsite and using the water discharge in the process.
- Evaluate recycling the reverse osmosis reject and ion exchange regeneration effluents.
- Perform filtration and reverse osmosis in stages to enable reuse in process.
- Deep-well inject brines which are too costly treat further.
- Reuse water from the equalization oil separator.
- Catch stormwater, treat for oil and solids removal and reuse as boiler water feed.

The actual waste-water treatments can be summarized as filtration (media and reverse osmosis), oil skimming, sewage treatment, flow control, deep-well injection.

4.1.2 Flue Gas Desulfurization System Wastes

The simplest way to reduce sulfur oxide emissions is to burn fuel containing relatively less sulfur; Middle Eastern crudes are relatively low in sulfur in their original state. Beyond that, sulfur oxide emissions are typically reduced in a flue gas desulfurization system. Because a significant amount of wastes can be generated in that process, magnesium-enhanced scrubbing, dry scrubbing, and selective catalytic reduction are emerging as alternatives to lime scrubbing.

Lime/Limestone Scrubber Systems: The typical flue gas desulfurization system is a lime or limestone slurry scrubber with a supplementary sludge disposal system. In the scrubber, the sulfur dioxide reacts with the lime or limestone and forms sulfite or sulfate solids that remain in solution or suspended in the slurry. The solids are separated from the slurry in conventional sludge settling tanks, and the liquid containing some suspended solids is enriched by adding more lime or limestone and is then recirculated. The sulfite gel may be stored in basins or ponds, or it may be converted to a sulfate solid, called gypsum, by oxidizing in aeration tanks.

Some lime and limestone scrubber wastes can be reused: gypsum can be used in the building and agricultural trades unless it is contaminated by other compounds or substances, in which case it is landfilled. Also, lime-based reagent can be added to scrubber sludge and fly ash in a pozzolanic stabilization reaction process to create a mineral product suitable for roadway base course.

Magnesium-Enhanced-Lime Scrubber Systems: Magnesium-enhanced lime scrubbing is replacing typical lime scrubbers at many plants. It is perhaps considered the most efficient commercial process available. In this process the presence of magnesium oxide increases the absorption capacity of the slurry by 10 to 15 times that of a limestone slurry. The principal advantage of this process is that sulfur dioxide removal is governed by the degree of gas/liquid contact in the absorber, not on solids dissolution, as it is with limestone systems. Thus, sulfur dioxide removal efficiencies of at least 98% can be achieved with significantly less liquid waste. In addition, compounds are available that can be added to magnesium-enhanced-lime scrubbers that accomplish NO_x removal as well as sulfur dioxide removal. The principal disadvantage of this process is that magnesium-enhanced lime is an expensive reagent.

Dry Scrubber Systems: The concept of dry scrubbing to remove sulfur dioxide from flue gas has been gaining acceptance. In dry scrubbers, liquid slurry drops containing very little water are sprayed into a hot gas stream. The liquid evaporates as chemical reactions and absorption of sulfur dioxide takes place in reactions similar to those in wet scrubbers. The solid particles can be collected with fly ash in the precipitator or baghouse. The advantages of dry scrubbers over wet scrubbers are that a dry powder is produced, avoiding disposal of a liquid slurry or wet sludge and much less water is required.

Selective Catalytic Reduction Systems: Selective Catalytic Reduction (SCR), although typically applied for NO_x removal, can also be used successfully for sulfur dioxide waste minimization. A system in Denmark is demonstrating not only 94% removal of NO_x, but also 95% removal of sulfur dioxide and the production of a projected 25,000 tons of commercial-grade sulfuric acid. No water is consumed, nor are other residual waste materials generated. It is believed to be the largest flue gas treatment process with by-product recovery operating worldwide.

The Denmark process is derived from sulfuric-acid production technology. Following the existing electrostatic precipitator, flue gas passes a fabric filter to ensure that the gas is free of fly ash. The gas temperature is raised to 750° Fahrenheit using process heat. Ammonia is injected into the flue gas upstream of a conventional SCR unit. The flue gas proceeds to a sulfur dioxide-to-sulfur trioxide catalytic converter coupled to a novel acid condensing unit. In the condensing unit, the acid-laden flue gas condenses inside 50,000 glass tubes. In addition to high removal efficiency, the process consumes only 0.5% of station power output.

Another type of SCR which can remove over 80% NO_x and 95% $S0_2$, uses zeolite to absorb the $S0_2$ and NO_x. After capturing the contaminant gases, zeolite is regenerated and reused.

4.1.3 NO_x Emissions

The basic tools for reducing NO_x emissions have not changed much in the past twenty years, but the manner in which they are being applied has. Categories of NO_x PP/WM options receiving the most attention in the literature include combustion modifications and postcombustion control devices, such as selective catalytic reduction and selective noncatalytic reduction systems. Computerized systems for total plant process control can also be effective methods of PP/WM.

Combustion Modifications: Control of nitrogen oxide emissions from combustion processes provides a good example of air pollution control by reducing the amount of pollutant produced. Reducing the formation of NO_x depends on carefully controlling the combustion temperature and fuel-air mixture in various parts of the flame.

Ideally, combustion takes place in two stages. During the first stage, the oxygen supply is limited so that the fuel is pyrolyzed and releases nitrogen in its innocuous molecular form. In a second, oxygen-rich stage, combustion of the remaining fuel is completed.

However, creating such staged combustion is tricky. U.S. utility applications of oil-fired low NO_x burners typically experience difficulties in achieving predicted NO_x reductions without excessive carbon monoxide emissions.

However, researchers at the Massachusetts Institute of Technology (MIT) have discovered a novel way to improve low NO_x burners. In laboratory tests the MIT scientists have been able to reduce NO_x emissions to about 15% of uncontrolled levels. This success is based on elongating the flame by swirling air around it. A longer flame promotes fuel pyrolysis and delays fuel combustion. Commercialization of the burner, which can be used to burn oil, is expected in late 1995.

It is important to note that any air in-leakage, which can be significant at older boilers, can quickly negate low-NO_x retrofit gains.

Postcombustion Controls: Selective catalytic reduction (SCR) and selective noncatalytic reduction (SNCR) are two types of postcombustion NO_x controls. Technology demonstrations have yielded mixed results. Pilot SCR demonstrations in oil-fired units indicated greater than 80% NO_x removal; however, several of the catalysts tested were plugged by premature activity decay and fly ash binding. Full-scale SNCR applications have achieved as much as 50% NO_x reductions in some instances and only up to 30% in others.

The basic objective of the SCR process is to use ammonia as a reagent and reduce NO_x to water and elemental nitrogen. Because the pertinent reactions normally proceed at temperatures greater than 1900° Fahrenheit, a catalyst is used to promote the reactions at lower temperatures. SCR systems are fixed bed reactors with catalyst formulations extruded into parallel plate or honeycomb arrangements. The primary design objective is to maximize exposure of the catalyst surface to the gas flow. SCR is considered the most effective method of post-combustion NO_x control when high removal efficiencies are required.

New catalyst formulations and fabrication techniques have extended the temperature range of the SCR process and make them more resistant to decay and ash binding. Aluminum oxide serves as the primary catalyst in many older SCR systems. Today, other basic compounds in catalyst formations are vanadium pentoxide and titanium dioxide and, to a much lesser extent, tungsten trioxide and silicon dioxide. Zeolites are another class of compound that are being introduced into SCR systems. A zeolite is a porous, complex crystalline solid generally made up of oxides of aluminum and silicon combined with alkali and alkali earth metals.

Catalysts, by definition, are not consumed in catalytic reaction. In theory, they can last forever when properly selected, designed, and applied. In practice, many compounds in flue gas and fly ash have been found to poison catalysts. Nevertheless, catalysts are guaranteed for a specific life, sometimes up to ten years.

SNCR is a generic label that refer o several distinct processes. It is a relatively simple though highly sensitive operation. The processes involve injection of urea, ammonium hydroxide, anhydrous ammonia, or aqueous ammonia into the furnace within the appropriate temperature window to reduce NO_x to N_2 and water. Urea dissociates quickly in the furnace to ammonia. A potential problem with SNCR is that some of the NO is converted into N_2O, a so-called greenhouse gas.

The distinction between SCR and SNCR is blurring: catalyst is being placed wherever it can fit and ammonia, urea, or other reagents are being injected in multiple locations to meet process requirements.

A potential drawback to SCR and SNCR systems is that although they reduce the NO_x air emission waste stream, they create other waste streams. Spent catalyst: disposal often presents hazardous waste concerns. Several catalyst suppliers offer catalyst recycling and disposal services. Zeolite catalysts are attractive in this respect since they contain less metals than do traditional catalysts. Additionally, the use of SCR and SNCR processes may require additional plant wastewater treatment for ammonia compounds: ammonia or urea injection may result in residual ammonia finding its way into the wastewater stream continuously, or in ammonium compounds intermittently washed from component surfaces and requiring batch treatment.

Computerized Process Control: Controlling NO_x emissions has emerged as an area in which advanced process control has become desirable, and almost necessary. Organizations like the Electric Power Research Institute (EPRI) have recognized that software can help plant operators balance heat rate with emissions. EPRI is combining individual software programs developed to help plant operators control fuel quality, heat rate, sulfur dioxide and NO_x emissions, and solid waste into one package called Advisory Plant and Environmental Control System. The package intends to automatically compute the control systems' set points needed to achieve environmental dispatch. Similar programs have enabled plants to reduce NO_x emissions an additional 27% beyond what standard pollution controls had accomplished. Ultimately, the goal is to have the system predict and optimize the process set points continuously in real time and automatically regulate flows, temperatures, and pressures.

Computerized process control can be used for wastewater control as well if continuous readout monitoring can be successfully installed on wastewater streams. This is usually not done, but is a good process control as well as waste control.

4.1.4 Fly Ash

Although the most common ash disposal methods are ponding and landfilling, partial utilization of ash as fill for roads, runways, and construction sites, and as cement and brick admixtures, has become more commonly practiced. Some possible fly ash applications are:

- Utilization as a Portland cement admixture or partial replacement.
- Utilization as a light aggregate for producing lightweight concrete blocks and structural lightweight concrete.
- Utilization as road bed material, loose aggregate, soil stabilizer, clean fill, or soil nutrient.
- Recovery of the metallic components of fly ash, such as aluminum, vanadium, titanium, and iron.
- Production of mineral wool.

4.1.5 Odor Problems

Odor problems in a power plant usually result from fuel burning. Cleanup of sulfur dioxide, nitrous oxides, and volatile organic carbon stack emissions usually eliminates the problem. Occasionally, the cooling tower can grow odor-causing bacteria, which, can be controlled with ozone treatment or chlorination. Another method to reduce power plant odors is to switch fuels to natural gas. Finally, odors may originate from solid waste not properly handled and disposed.

4.1.6 General PP/WM Techniques

Several general techniques for reducing or eliminating facility wastes, particularly hazardous wastes are identified in the literature. The techniques range from simple material handling changes to the installation of new equipment and training of personnel. Noted techniques include:

- Recovery of spent solvent.
- Recycle of cardboard, plastic, paper, glass, motor oil, metals, and other materials.
- Replacement of disposable items with reusable items.
- Routine inspection and maintenance of valves, pipe joints, pumps, tanks, etc., to prevent waste generation due to leaks and spills and to lengthen equipment life.
- Utilization of seal-less pumps.
- Maximization of welded pipe joints.
- Utilization of oil-absorbent pads to reclaim both the pads and used oil, instead of using granulated absorbents.
- Installation of spill basins or dikes in storage areas.
- Installation of splash guards and drip boards on tanks and faucets.
- Installation of overflow control devices on process and storage tanks.
- Utilization of trained and qualified personnel to maintain optimum operating conditions.
- Water usage optimization.

As an example, the Los Angeles Department of Water & Power was able to generate 70% less hazardous solvent waste than it had in 1990 by making general process changes. Specifically, the Department minimized its waste by successfully employing nonhazardous

solvents as substitutes for hazardous solvents used for parts cleaning. The usual solvents are typically chlorinated or otherwise hazardous solvents. Part of this reduction was accomplished through solvent recycling, but the bulk of it resulted from a switch to nonhazardous solvents, primarily citrus-based.

Finally, computer software is available to assist power plants implement a waste minimization program. For example, one soon-to-be-released tool developed by EPRI is a software program that will help utilities determine the volume of particular wastes that they generate. The program-Accounting Software Application for Pollution Prevention-tracks the origin and destination of various waste streams and monitors the costs involved. The process is similar to financial accounting, only the software user is counting not only dollars but also pounds of waste.

4.2 Water Conservation

Where water is scarce, water conservation is a necessity. Water conservation improvements identified in the literature apply to flue gas desulfurization systems, and blowdown systems, water treatment systems, and alternative water sources. Also, as with PP/WM, water conservation can be realized through general process improvements.

4.2.1 Flue Gas Desulfurization System Water Conservation

Flue gas emissions control devices, particularly wet lime and limestone scrubbers, are large consumers of water. However, because they do not require high purity water, they can receive low-quality water recycled from, for example, cooling tower blowdown; this low-quality water is otherwise typically considered wastewater.

Another method to conserve water in the flue gas desulfurization system is being developed by the Consolidated Edison Company of New York. The company plans to demonstrate a unique process that has the potential to recover both waste and energy, in addition to removing such compounds as air toxics and fine particulates from flue gas emissions. The process will use condensing heat exchangers for flue gas treatment and could be adapted for removal of significant quantities of sulfur dioxide as well.

Finally, use of low-sulfur fuel oil will eliminate the need to even treat the emissions, thereby conserving the treatment water.

4.2.2 Blowdown System Water Conservation

Blowdown systems have the potential for water conservation through reuse. For example, since the boiler feedwater supply has the highest water quality requirements of any system in the power plant, the boiler blowdown is generally of higher purity than the original source of supply. Thus untreated boiler blowdown can efficiently be recycled for almost any other use in the plant.

Treated cooling tower blowdown also has the potential for reuse. It has been documented to be a good source of make-up and misting water for flue gas desulfurization scrubbers and may also be used for bearing flush water and pump-seal water. Characteristically, the blowdown must go through a lime-softening process for treatment; reverse osmosis or ion exchange may also be appropriate.

Additionally, the frequency of blowdown and its associated treatment can be minimized to conserve water. However, there are upper limits at which it is not possible or practical to continue operating the boiler or cooling tower without blowdown due to excessive amounts of corrosion, scaling, and fouling due to high concentrations of certain contaminants in the recirculating water. While the levels at which it is practicable to operate can be raised by using make-up water treatment, corrosion resistant materials, and scaling, corrosion and fouling inhibitors, there are still upper bounds to the permissible cycles of water due to ion concentration.

One way to obtain the maximum cycles of water is by treatment of make-up water and recirculating it. Side stream filtration can effectively control the suspended solids level. Side stream treatment consists of treating a portion of the circulating water and returning it to the system. By-product streams, such as sludge or filter backwash, are not returned to the system and their volume must be replaced with additional make-up water. Make-up water treatment is primarily lime-soda softening.

4.2.3 Water Treatment System Water Conservation

Reverse osmosis demineralization systems have also been targeted as a means of water conservation. These systems typically divert approximately 25% of boiler feedwater flow to the drain as concentrated brine. A system has been devised by Arrowhead Industrial Water, Enron Power, and Calgon Corporation which recovers all of the reverse osmosis effluent stream for partial makeup to the cooling tower. The water that is now being pumped to the sewer and irrigation could be treated similarly, to return a high percentage of it to the process system. Irrigation water could be treated similarly, to return a high percentage of it to the system. Ultimately the brine backwash from the reverse osmosis unit could be deep-well injected (10,000-15,000 ft. deep).

4.2.4 Alternative Water Sources

One way to conserve water is to generate process water from sources that would otherwise be considered wastewater. For example, a few power plants have utilized sea water or sewage treatment plant effluent as make-up water. In this case then, the effluent from the AS Samra wastewater treatment plant would be a source of plant water.

The primary effect of sea water on power plant systems is to increase the corrosion rate of metals and concrete within the condensation system. Special construction materials, such as high-sulfate cement, are required to construct saltwater circulating water systems. Otherwise, the saline make-up water requires no special pretreatment other than screening. An additional benefit is that the utility can produce sodium hypochlorite from the sea

water by electrolysis.

Both municipal sewage effluent and on-site sanitary wastewater can be recycled for make-up water. In some instances, more advanced treatment is required to remove nitrogen and phosphorous or reduce suspended solids and BOD to very low levels. These treatment techniques supplement conventional municipal treatment of effluents with chlorination or ozonation.

The As Samara wastewater treatment plant may discharge water that is either directly useable or useable after simple treatment in the power plant. The quality of this discharge is critical. If the sewage treatment plant effluent is sufficiently low in salinity, consideration should be given to the use of the effluent as cooling water in the power plant. The water needs to be low in BOD as well so that the power plant would not need to construct its own biological treatment facility to treat the incoming sewage plant water. The possibilities of conserving the sewage treatment plant water by using it in the power plant can be evaluated in the feasibility studies in the next phase of this study.

4.2.5 General Water Conservation Techniques

General techniques for conserving facility water have been identified in the literature. Most techniques involve equipment changes, and include:

- Utilization of high-pressure/high temperature washing equipment.
- Installation of flow-control valves and timers to control process water usage.
- Measurement of water flow rates from each unit process to control water usage.
- Treatment and recycle of floor drain and sump discharges.
- Collection and use of storm water.

4.3 Conclusion

Relative to other thermal electric power plants using fuel oil in an arid environment, there appears to be some significant potential for water conservation and WM/PP at the Al Hussein Thermal Electric Power Plant.

There is significant water pumped from the plant to the sewage plant and to irrigation. Much of this wastewater could be treated by filtration, including reverse osmosis, and recycled in the plant as process water. The salty filtration and ion exchange backwash will need to be deep-well injected or disposed at the sewage treatment plant. Even the discharge from the sewage treatment plant could potentially be recycled into the plant.

Water can very likely be conserved in the power plant by good operating practices such as preventative maintenance, good housekeeping, spill prevention, controlled storm runoff, cleaning techniques using minimum water, and a good training program to ensure program success. The need for any or all of these in the Al Hussein Thermal Electric Power Plant will be evaluated with the audit.

Since water conservation is essential in Jordan, long term plans should include consideration of changing the basic steam turbine technology to either the combined system, or, gas and/or diesel driven turbines at this power plant.

Gaseous emissions of sulfur dioxide, nitrous oxides and volatile organic carbon are apparently a substantial air pollution problem. If switching to natural gas fuel is not possible, consideration needs to be given to burning only low sulfur fuel oil and installing low NO_x emissions burners and/or turbines.

Further comparison can be made during the audit since at this time the information on the Al Hussein thermal electric power plant is very limited.

5.0 REFERENCES

The following documents were reviewed to prepare this report. With the exception of references 16 and 17, the essential components of each are included as an appendix to this report under a separate cover.

1. Center for Hazardous Materials Research. "Pollution Prevention: Strategies for Fossil Fuel Electric Power Generation." Fact Sheet.

2. COWIconsult and Royal Scientific Society. Industrial Pollution Control Project, Jordan. Project Component No. 2: Industrial Wastewater Pretreatment Requirements. Chapter 19 ("Enterprise No. 11: Al Hussein Power Station"), June, 1994.

3. "Fuel Staging." Power, p. 30, May, 1993.

4. "Full-Scale SCR Retrofit is First at US Power plant." Power, p. 30, May, 1993.

5. "High-Strength Resins Reduce Chemical Waste." Power, p. 30, December, 1993.

6. Jones, Cate. "Consider SCR an Integral Part of the Combustion Process." Power, p. 32, December, 1993.

7. Kokkinos, A., *et al.* "NO_x Controls for Utility Boilers: Highlights of the EPRI July 1992 Workshop." Journal of the Air Waste Management Association, Vol. 42, No. 11, p. 1498, November 1992.

8. Lamarre, Leslie. "Digging Into Pollution Prevention." EPRI Journal, p. 6, September, 1993.

9. Livengood, C. David (Argonne National Laboratory). Information on Advances in Power Plant Emission Control Devices. Personal Communication. 1994.

10. Makanski, Jason; editor. "Amend Soils with Residues from Water-Treatment Processes." Power, September, 1993.

11. Makanski, Jason; editor. "Controlling SO_2 Emissions." Power, p. 23, March, 1993.

12. Makanski, Jason; editor. "Integrated Control Concepts Minimize Environmental Impact." Power, p. 21, August, 1993.

13. Makanski, Jason; editor. "Process Control Plays Quiet But Huge Role in CAA Compliance." Power, p. 57, January, 1994.

14. Makanski, Jason; editor. "Reducing NO_x Emissions from Today's Power Plants." Power, p. 11, May, 1993.

15. Minnesota Office of Waste Management. "Waste Source Reduction Checklist." Fact Sheet. April, 1991.

16. Nichols, Charles R. "Development Document for Effluent Limitations Guidelines and New Source Performance Standards for the Steam Electric Power Generating Point Source Category." U.S. Environmental Protection Agency, Office of Water and Hazardous Materials, Washington, D.C. 1974.

17. Senges, D.C., *et al.* "Closed-Cycle Cooling Systems for Steam-Electric Power Plants: A State-of-the-Art Manual." Mackell, Inc., Woodbury, NJ, Sponsored by U.S. Environmental Protection Agency, Industrial Environmental Research Laboratory. 1979.

18. Shreve, R. Norris and Joseph A. Brink, Jr. Chemical Process Industries, 4th Edition, p. 49-62. McGraw-Hill, Inc., New York, NY, 1977.

19. State of Michigan, Departments of Commerce and Natural Resources. "Waste Reduction Checklist." Fact Sheet.

20. Strauss, Sheldon D. "Water Treatment." Power, p. 17, June, 1993.

21. "Steam Turbines". Power. pp. S 1-560. June, 1989.

22. Tabors, Richard (Massachusetts Institute of Technology). Background Information on State-of-the-Art Steam Electric Power Plants. Personal Communication. 1994.

23. "Ultralow-NO_x Burner Based on Swirling Air." EPRI Journal, p. 5, January/February, 1994.

24. U.S. Environmental Protection Agency, Region III. "Pollution Prevention Opportunities in Fossil Fuel Electric Power Generation." Pamphlet. October, 1990.

25. "Use of RO Concentrate Conserves Plant Water." Power, p. 171, November, 1993.

FIGURES

\proposal\ordenlsr3.cdr

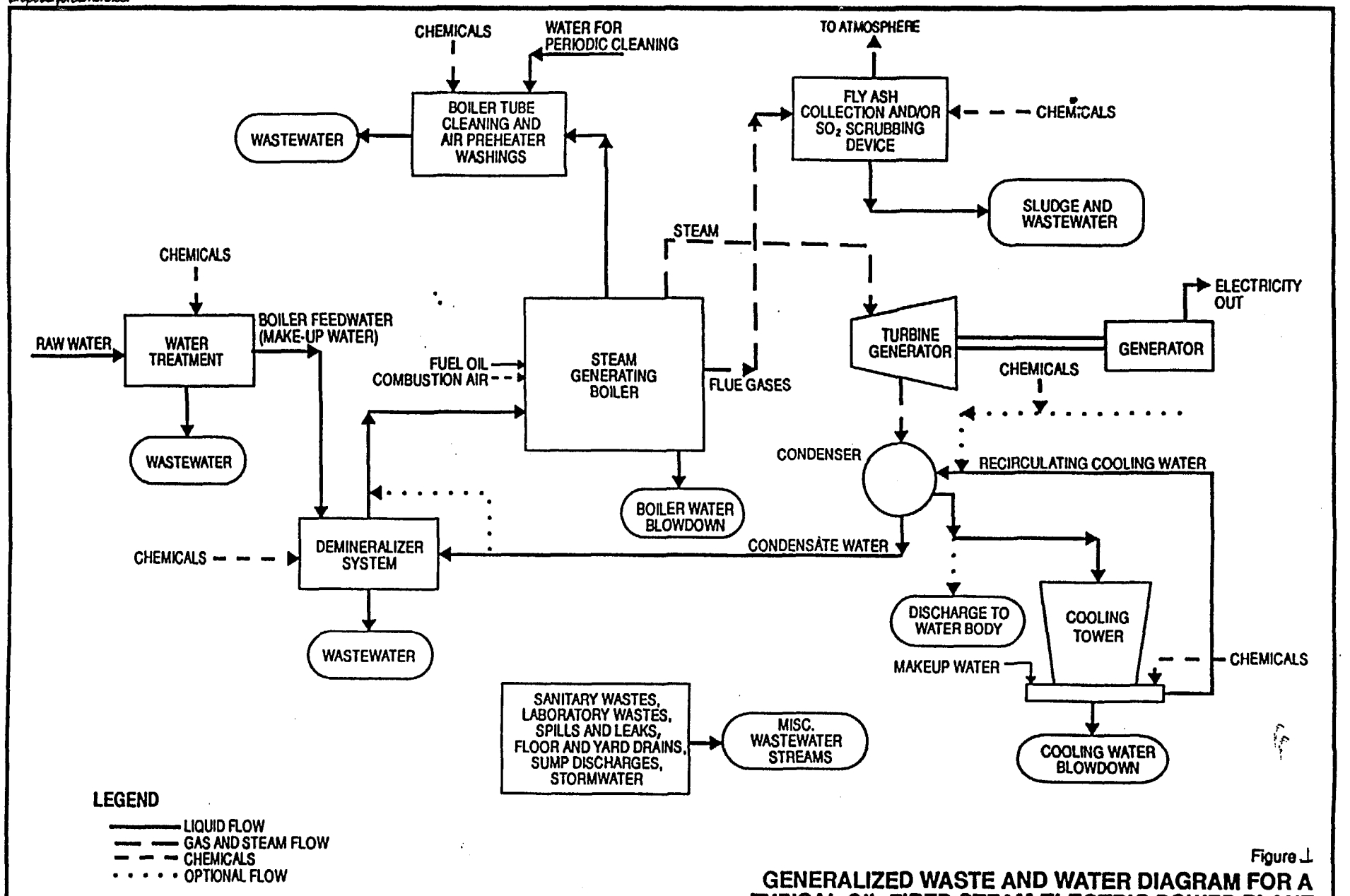

Figure 1

GENERALIZED WASTE AND WATER DIAGRAM FOR A TYPICAL OIL-FIRED STEAM ELECTRIC POWER PLANT

INDUSTRIAL WASTEWATER DISCHARGE PREVENTION

WATE... QUALIT... ...PRO...ENT ... CONS...ATIC... ...OJE...

Consulting Engineers and Scientists

128

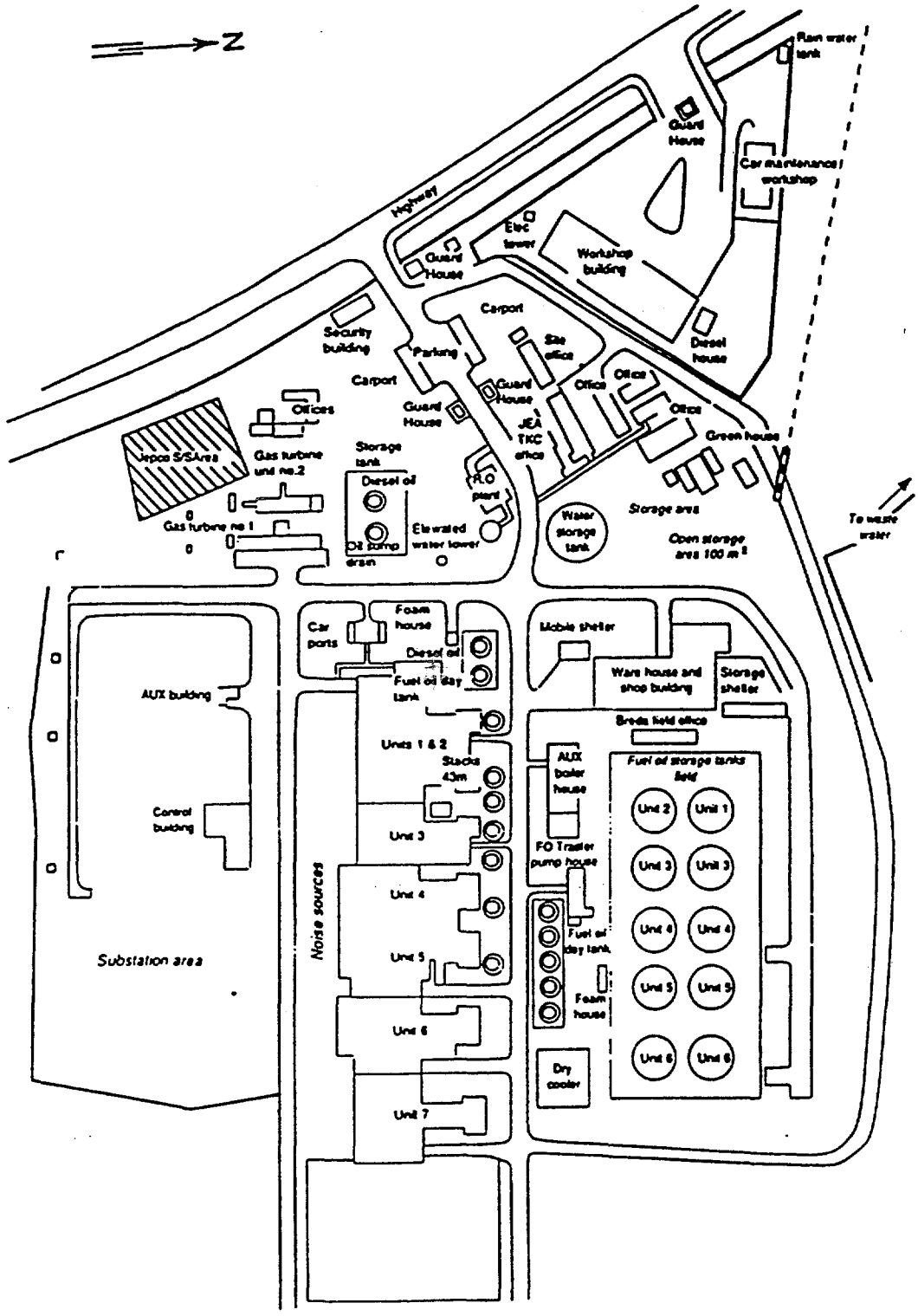

SOURCE:
Industrial Pollution Control Project, Jordan
Project Component No. 2, Chapter 19
COWIconsult and RSS

HARZA Consulting Engineers and Scientists

Figure 2
AL HUSEIN THERMAL POWER STATION
INDUSTRIAL WASTEWATER DISCHARGE PREVENTION
WATER QUALITY IMPROVEMENT AND CONSERVATION PROJECT
Amman, Jordan

APPENDIX E

APPLICABLE WATER QUALITY CRITERIA

APPLICABLE REGULATORY CRITERIA

Current Status of Environmental Regulations in Jordan:

In order to assess the Al Hussein Thermal Power Station (HTPS) compliance with applicable Jordanian standards and regulations, it is of importance at this stage to present an overview of Jordan's environmental protection control laws, standards, and regulations. Interestingly, Jordan has no comprehensive law to control water, air, and soil pollution. However, a Jordanian Environment Act (JEA) was drafted two years ago to achieve the principle objectives mentioned in the National Environment Strategy (NES) for Jordan. JEA is currently awaiting approval from the Parliament.

In general, the nature of water pollution standards and regulations in Jordan vary according to sources. Industrial wastewater discharges are regulated by the Jordanian standard specification number 202 (Table E-1) adopted in 1981 by the Department of Standards and Specifications (DSS) and revised in 1990. Standard 202 regulates industrial wastewater discharges to rivers, wadis, groundwater, the sea, and reuse for irrigation. This standard covers 37 pollutant parameters and sets maximum allowable concentration limits of pollutants in the discharged industrial wastewater effluents. Moreover, the standard also contains narrative conditions to protect public health, aquatic life, worker health; and groundwater quality. The standard is not associated with a permitting mechanism and therefore is self-implementing.

Drinking water quality is regulated by the Jordanian standard number 286. Tables C-2a - C-2e present quantitative requirements of pertinent characteristics including physical, chemical , radiation , and health related issues. Moreover,it is a common practice to use the Food and Agriculture Organization (FAO) and World Health Organization (WHO) Guidelines as a reference .Tables E-3 through E-5 are related to the quality of treated domestic wastewater effluents to be reused in irrigating agricultural crops. The remaining tables E-6 - E-12 present the tolerance and sensitivity of crops to salinity and other specific ions like Sodium, Boron and Chloride. These are adapted from the FAO Guidelines (1985). Treated domestic wastewater is regulated by the Jordanian Standard 893 (Table E-13) adopted in

1994 by DSS. Discharge of Industrial and Commercial Wastewaters into the public sanitary Sewer System is regulated by the Water Authority Law, Law Number 18, of 1988, Annex (B-4). The regulations stipulated herein are presented in table E-14. Regarding air pollution, Jordan does not have any existing standards or regulations to control air pollution.

Regulations Applicable to the HTPS Discharges:

During the course of conducting an environmental pollution prevention/ waste minimization audit of the HTPS, the audit team identified two major continually discharged effluents. These discharges are industrial and domestic wastewater effluents disposed into the public sanitary sewer system.

The first effluent corresponds to industrial wastewater produced from R.O reject, I.E regeneration, Cooling Tower blowdown, and boiler continuous blowdown, While the second wastewater discharge, is domestic wastewater produced by regular human activities at the HTPS.

Pertinent Jordanian standards regulating disposition into the Public Sewer System are governed by the Jordanian regulations presented in table E-14.

Results of analyses conducted by the central laboratories of WAJ for grab samples taken from a point before these streams are mixed and discharged to As samra treatment plant show that most parameters of concern (e.g. BOD5,TSS,FOG) do not exceed maximum allowable limits stipulated in the Jordanian regulations presented in table E-14. These results are presented in table 2.

It is highly recommended that HTPS institutes a monitoring program in order to test for the quality of their wastewater effluents. This action, if adopted, will enable HTPS to be prepared when the new JEA will be passed.

Table E-1

Summary of requirements of Jordan Standard 202/1991 for disposal of industrial effluents.

Parameter	Maximum Allowable Limit, (mg/l)+			
	Disposal To			
	Wadis & Rivers	Sea	Groundwater Recharge	Reuse for Irrigation**
BOD5	50M	-	50M	-
COD	150M	200	150M	-
DO	1*	5*	1*	1*
TDS	3000(1)	-	1500 (1)	2000 (2)
TSS	50	-	-	100 (3)
pH (su)	6.5-9.0	5.5-9.0	6.5-9.0	6.5-8.4
Color (unit)	15	75	15	-
TC	-	4	-	-
FOG	5	10	Absent	5
Phenol	0.002	1	0.002	0.002
MBAS	25		15	-
NO3-N	12 (4)	-	12 (4)	30
NH3	5	12	5	5
T-N	-	125	-	50
PO4-P	15	-	-	-
Cl	500	-	500	350 (3)
SO4	500	-	500	400
F	1.5	-	1.5	-
HCO3	-	-	-	500
Na	-	-	400	-
Mg	-	-	-	-
Ca	-	-	-	-
SAR	-	-	-	9
Al	5	-	0.3	5
As	0.05	0.1	0.05	0.1
B	1	-	1	1 (5)
Cr	0.1	0.3	0.05	0.1
Cu	2	0.1	2	0.2
Fe	1	2	1	5
Mn	0.2	0.2	0.2	0.2
Ni	0.2	0.02	0.1	0.2
Pb	0.1	0.1	0.1	1
Se	0.02	0.02	0.05	0.02
Cd	0.01	0.07	0.02	0.01
Zn	15	-	15	2
CN	0.1	1	0.1	0.1
Hg	0.001	0.001	0.001	0.001
TCC MPN/100ml		5000	-	-
TFCC MPN/100ml	1000(6)	-	1000 (6)	1000 (6)
Nematodes	< 1	-	-	< 1

(+) All units are in mg/l except where noted.
(*) Minimum value.
(**) Depends upon, type and quantity of crops, irrigation methods,soil type, climate & groundwater in the area concerned.
(-) Undetermined.
(M) Monthly average.

Notes:
(1) TDS allowable limit is subject to the TDS concentration in the water supply and the water basin affectd.
(2) Allowable limits of wastewater reuse determine the degree of restriction (none, slight to moderate, or severe).
(3) Method of irrigation is determined by wastewater quality being used.
(4) Nitrate concentrations allowed are determined by its concentrations in the affected water basin.
(5) Could reach 3 mg/l.
(6) Geometric mean.

Table E-2a
Jordanian Drinking Water Standards
A: Physical characterstics

Parameter	Permissible Limit	Max. allowable conc. in case no better source is available
Taste	aesthetically acceptable	-
Odor	aesthetically acceptable	-
Color	10 units	15 units
Turbidity	1 unit (JCU)	5 units
pH	6.5 < pH < 9	-
Temperature	8 - 25 c	-

Table E-2b

Jordanian Drinking Water Standards

B: Chemical Charecterstics

Parameter	Max. Allowable Conc. mg/l
Pb	0.05
Se	0.01
As	0.05
Cr	0.05
CN	0.1
Cd	0.005
Hg	0.001
Sb	0.01
Ag	0.01

Table E-2c
Jordanian Drinking Water Standards
C: Health related

Parameter	Permissible Limit mg/l	Max. allowable conc. in case no better source is avialable	Effects within max. allowable limits
TDS	500	1500	aesthetic
TH(CaCO3)	100	500	aesthetic
ABS	0.5	1	indicator
Al	0.2	0.3	aesthetic
Fe	0.3	1	aesthetic
Mn	0.1	0.2	aesthetic
Cu	1	1.5	aesthetic
Zn	5	15	aesthetic
Na	200	400	aesthetic
Ni	0.05	0.1	health
Cl	200	500	aesthetic
F	1	1.5	health
SO4	200	500	aesthetic
NO3	45	70	health

Table E-2d

Jordanian Drinking Water Standards
D: Radiation

Parameter	Maximum limit Bq/l
Alpha-emitters (except for Radon)	0.1
Beta-emitters	1

Table E-2e

Jordanian Drinking Water Standards
E: Organic pollutants*

Parameter	Max. Permissible Conc. mg/l
A) Chlorinted Hydrocarbons	
Endrin	0.0002
Lindane	0.004
Methoxychlor	0.1
Toxaphene	0.005
B) Chlorophenoxys	
2,4-D	0.1
2,4,5-TP (Trichlorophenoxy propionic acid)	0.01

* Other organic pollutants should not exceed the max. allowable limit set by WHO.

Table E-3

Guidelines for interpretations of water quality for irrigation (1)

Potential irrigation problems	Units	Degree of restriction on use: None	Slight to moderate	Severe
Salinity (affects crop water availability) (2)				
EC_w (or)	dS/m	< 0.7	0.7 - 3.0	> 3.0
TDS	mg/l	< 450	450 - 2000	> 2000
Infiltration (affects infiltration rate of water into the soil. Evaluate using (EC_w and SAR together) (3)				
SAR = 0-3 and EC_w	=	> 0.7	0.7 - 0.2	< 0.2
= 3-6	=	> 1.2	1.2 - 0.3	< 0.3
= 6-12	=	> 1.9	1.9 - 0.5	< 0.5
= 12-20	=	> 2.9	2.9 - 1.3	< 1.3
= 20-40	=	> 5.0	5.0 - 2.9	< 2.9
Specific ion toxicity (affects sensitive crops)				
Sodium (Na) (4)				
Surface irrigation	SAR	< 3	3 - 9	> 9
Sprinkler irrigation	me/l	< 3	> 3	
Chloride (Cl) (4)				
Surface irrigation	me/l	< 4	4 - 10	> 10
Sprinkler irrigation	me/l	< 3	> 3	
Boron (B) (5)	mg/l	< 0.7	0.7 - 3.0	> 3.0
Trace elements(see table E4)				
Miscellaneous effects (affects susceptible crops)				
Nitrogen (NO3-N) (6)	mg/l	<5	5 - 30	> 30
Bicarbonate (HCO3) (Overhead sprinkling only)	me/l	< 1.5	1.5 - 8.5	> 8.5
pH			Normal range 6.5 - 8.4	

(1) Adapted from University of California Committee of Consultants 1974.
(2) ECw means electrical conductivity, a measure of the water salinity, reported in deciSiemens per metre at 25C^0 (dS/m) or in units millimhos per centimeter (mmho/cm). Both are equivalent. TDS means total dissolved solids, reported in milligrams per liter (mg/l.).
(3) SAR means sodium adsorption ratio. SAR is sometimes reported by the symbol RNa. At a given SAR, infiltration rate increase as water salinity increases. Evaluate the potential infiltration problem by SAR as modified by ECw.
(4) For surface irrigation, most tree crops and woody plants are sensitive to sodium and chloride; use the values shown. Most annual crops are not sensitive. With overhead sprinkler irrigation and low humidity (<30 percent), sodium and chloride may be absorbed through the leaves of sensitive crops.
(5) For borm tolerances, see Tables 16 and 17.
(6) NO3-N means nitrate nitrogen reported in terms of elemental nitrogen (NH4-N and Organic-N should be included when wastewater is being tested).

Assumptions in the Guidelines

The water quality guidelines in Table 1 are intended to cover the wide range of conditions encountered in irrigated agriculture. Several basic assumptions have been used to define their range of usability. If the water is used under greatly different conditions, the guidelines may need to be adjusted. Wide deveations from the assumptions might result in wrong judgements on the usability of a particular water supply, especially if it is a borderline case. Where sufficient experience, field trials, research or observations are available, the guidelines may be modified to fit local conditions more closely.

The basic assumptions in the guidelines are:

Yield Potential: Full production capability of all crops, without the use of special practices, is assumed when the guidelines indicate no restrictions on use. A "restriction on use" indicates that there many be a limitation in choice of crop, or special management may be needed to maintain full production capability. A "restriction on use" does not indicate that the water is unsuitable for use.

Site Conditions: Soil texture ranges from sandy-loam to clay-loam with good internal drainage. The climate is semi-arid to arid and rainfall is low. Rainfall does not play a significant role in meeting crop water demand or leaching requirement. (In a monsoon climate or areas where precipitation is high for part or all of the year, the guideline restrictions are too severe. Under the higher rainfall situations, infiltrated water from rainfall is effective in meeting all or part of the leaching requirement.) Drainage is assumed to be good, with no uncontrolled shallow water table present within 2 metres of the surface.

Methods and Timing of Irrigations: Normal surface or sprinkler irrigation methods are used. Water s applied infrequently, as needed, and the crop utilizes a considerable portion of the available stored soil-water (50 percent or more) before the next irrigation. At least 15 percent of the applied water percolates below the root zone (leaching fraction [LF] ≥ 15 percent). The guidelines are too restrictive for specialized irrigation methods, such as localized drip irrigation, which results in near daily or frequent irrigations, but are applicable for subsurface irrigation if surface applied leaching satisfies the leaching requirements.

Water Uptake by Crops: Different crops have different water uptake pattern, but all take water from wherever it is most readily available within the rooting depth. On average about 40 percent is assumed to be taken from the upper quarter of the rooting depth, 30 percent quarter, 20 percent from the third quarter, and 10 percent from the lowest quarter. Each irrigation leaches the upper root zone and maintains it at a relatively low salinity. Salinity increases with depth and is greatest in the lower part of the root zone. The average salinity of the soil-water is three times that of the applied water and is representative of the average root zone salinity to which the crop responds. These conditions result from a leaching fraction of 15-20 percent and irrigations that are timed to keep the crop adequately watered at all times.

Salts leached from the upper root zone accumulate to some extent in the lower part but a salt balance is achieved as salts are moved below the root zone by sufficient leaching. The higher salinity in the lower root zone becomes less important if adequate moisture is maintained in the upper, "more active" part of the root zone and long-term leaching is accomplished.

Restriction on Use: The "Restriction on Use" shown in Table 1 is divided into three degrees of severity: none, slight to moderate, and severe. The divisions are somewhat arbitrary since change occurs gradually and there is no clear-cut breaking point. A change of 10 to 20 percent above or below a guideline value has little significance if considered in proper perspective with other factors affecting yield. Field studies, research trials and observations have led to these divisions, but management skill of the water user can alter them. Values shown are applicable under normal field conditions prevailing in most irrigated areas in the arid and semi-arid regions of the world.

BEST AVAILABLE COPY

Table E-4
Recommended maximum concentrations of trace elements in irrigation water (1)

Element	Recommended maximum concentration(2) (mg/L)	Remarks
Al (aluminium)	5.0	Can cause non-productivity in acid soils (pH < 5.5). but more alkaline soils at pH > 7.0 will precipitate the ion and eliminate any toxicity.
As (arsenic)	0.10	Toxicity to plants varies widely, ranging from 12 mg/L. for Sudan grass to less than 0.05 mg/L for rice.
Be (beryllium)	0.10	Toxicity to plants varies widly, raning from 5 mg/L for kale to 0.5 mg/L for bush beans.
Cd (cadmium)	0.01	Toxic to beans beets and turnips at concentrations as low as 0.1 mg/L in nutrient solutions. Conservative limits recommended due to its potential for accumulation in plants and soils to concentrations that may be harmful to humans.
Co (cobalt)	0.05	Toxic to tomato plants at 0.1 mg/L in nutrient solution. Tends to be inactivated by neutral and alkaline soils.
Cr (chromium)	0.10	Not generally recognized as an essential growth element. Conservative limits recommended due to lack of knowledge on its toxicity to plants.
Cu (copper)	0.20	Toxic to a number of plants at 0.1-1.0 mg/L in nutrient solutions.
F (fluoride)	1.0	Inactivated by neutral and alkaline soils.
Fe (iron)	5.0	Not toxic to plants in aerated soils. but can contribute to soil acidification and loss of availability of essential phosphorus and molybdenum. Overhead sprinkling may result in unsightly deposits on plants, equipment and buildings.
Li (lithium)	2.5	Tolerated by most crops to 5 mg/L, mobile in soil. Toxic to citrus at low concentrations (<0.075 mg/L). Acts similarly to boron.
Mn (manganeses)	0.20	Toxic to a number of crops at a few-tenths to a few mg/L., but usually only in acid soils.
Mo (molybdenum	0.01	Not toxic to plants at normal concentrations in siol and water. Can be toxic to livestock if forage is grown in siols with high concentrations of available molybdenum.
Ni (nickel)	0.20	Toxic to a number of plants at 0.5-1.0mg/L.; reduced toxicity at neutral or alkaline pH.
Pd (lead)	5.0	Can inhibit plant cell growth at very high concentrations.
Se (selenium)	0.02	Toxic to plants at concentrations as low as 0.025 mg/L. and toxic to livestock if forage is grown in soils with relatively high levels of added selenium. An essential element to animals but in very low concentrations.
Sn (tin)		
Ti (titanium)		Effectively excluded by plants; specific tolerance unknown.
W (tungsten)		
V (vanadium)	0.1	Toxic to many plants at relatively low concentrations.
Zn (zinc)	2.0	Toxic to many plants atwidely varying concentrations, reduced toxicity at pH > 6.0 and in fine textured or organic soils.

1- Adapted from National Academy of Sciences (1972) and Pratt (1972).
2- The maximum concentration is based on a water application rate which is consistent with good irrigation practices (10000 m3/ha per years). If the water application rate greatly exceeds this, the maximum concentrations should be adjusted downward accordingly. No adjustment should be made for application rates lease than 10 000 m3/ha per year. The values given are for water used on a continuous basis at one site.
Source: FAO Guidelines, R.S. Ayers & D.w. Westcot (1985).

Table E-5

Recommended microbiological quality guidelines for wastewater use in agriculture (a)

Category	Reuse conditions	Exposed group	Intestinal nematodes (b) (arithmetic mean no. of eggs per litre (c))	Faecal coliforms (geometric mean no. per 100ml) (c)	Wastewater treatment expected to achieve the required microbiological quality
A	Irrigation of crops likely to be eaten uncooked. sports fields, public parks, (d)	Workers, Consumer, public	<1	< 1000 (d)	A series of stabilization ponds designed to achieve the microbiological quality indicated, or equivalent treatment
B	Irrigation of cereal crops, industrial crops, fodder crops, Pasture and trees (e)	Workers	<1	No standard recommended	Retention in stabilization ponds for 8-10 days or equivalent helminth and faecal coliform removal
C	Localized irrigation of crops in category B if exposure of workers and the public does not occur	None	Not applicable	Not applicable	Pretreatment as required by the irrigation technology, but not less than primary sedimentation.

(a) In specific cases, local epidemiological, sociocultural and environmental factors should be taken into account, and the guidelines modified accordingly.
(b) Ascaris and Trichuris species and hookworms.
(c) During the irrigation period.
(d) A more stringent guideline (< 200 faecal coliforms per 100 ml) is appropriate for public lawns, such as hotel lawns. With which the public may come into direct contact.
(e) In the case of fruit trees, irrigation should cease two weeks before fruit is picked, and no fruit should be picked off the ground. Sprinkler irrigation should not be used.
Source: Scientific group on health aspects of use of treated wastewater for agricultural and aquaculture-W.H.O.- Geneva 18-23 Nov. 1987.

Table E-6

Chloride tolerance of some fruit crop cultivars and rootstocks.(a)

Crop	Rootstock or cultivar	Maximum permissible Cl in water without leaf injury (b),(c) (mg/L)
	Rootstocks	
Avocado (Persea americana)	West indian	180
	Guatemalan	145
	Mexican	110
Citrus (Citrus spp.)	Sunki mandarin, grapefruit	
	Cleopatra mandarin, Rangpur lime	600
	Sampson tangelo, rough lemon, sour orange, Ponkan mandarin	355
	Citrumelo 4475, trifolate orange, Cuban shaddock, Calamondin, Sweet orange, Savage citrange, Rusk citrange, Troyer citrange	250
Grape (Vitis spp.)	Salt Creek, 1613-3	960
	Dog ridge	710
Stone fruit (Prunus spp.)	Marianna	600
	Lovell, Shalil	250
	Yunnan	180
	Cultivars	
Berries (Rubus spp.)	Boysenberry	250
	Olallie blackberry	250
	Indian Summer raspberry	110
Grape (vitis spp.)	Thompson seedless, Perlette	460
	Cardinal, black rose	250
Strawberry (Fragaria spp.)	Lassen	180
	Shasta	110

(a) Data are adapted from Haas (13)
(b) For some crops, the concentrations given may exceed the overall salinity tolerance of that crop and cause some yield reduction before chloride ion toxicities. Values given are for the maximum concentration in the irrigation water. The values were derived from saturation extract data (ECe) by the following relationship : saturation extraction concentration = 1.5 water concentration.
(c) The maximum permissible values apply only to surface irrigated crops. Sprinkler irrigation may cause excessive leaf burn at values far below these, (see Table 3-10).

Source : FAO Guidelines, R.S. Ayers & D.W. Westcot (1985).

Table E-7

GUIDLINES FOR INTERPRETING LABORATORY DATA ON WATER SUITABILITY FOR GRAPES

Potential Irrigation Problem	Unita	Degree of Restriction on Use		
		None	Slight to Moderate	Severe2
Salinity[3] *(affects water availability to crops)*				
ECw	dS/m	< 1	1.0 - 2.7	> 2.7
Toxicity *(Specific ions which affect growth of crop)*				
Sodium (Na^+)[4]	mc/l	< 20	-	-
Chloride (Cl^-)[4]	mc/l	< 4	4 - 15	> 15
Boron (B)	mg/l	< 1	1 - 3	> 3
Miscellaneous				
Bicarbonate ($HCO3^-$)[5]	mc/l	< 1.5	1.5 - 7.5	> 7.5
Nitrate-nitrogen (NO3-N)	mg/l	< 5	5 - 30	> 30

1. Adapted from Neja et al. 1978.
2. Special management practices and favorable soil conditions are required for successful production.
3. Assumes that rainfall and extra water applied owing to inefficiencies of normal irrigation will supply the crop need plus about 15 percent extra for salinity control.
4. With overhead sprinkler irrigation, sodium or chloride in excess of 3 me/l under extreme drying conditions may result in excessive leaf absorption, leaf burn and crop damage. If overhead sprinklers are used for cooling by frequent on-off cycling, damage may occur even at lower concentrations.
5. Bicarbonate (HCO3) in water applied by overhead sprinklers may cause white deposits on fruit and leaves which reduces market acceptability, but is not toxic to the plant.

Table E-8

PELATIVE SALT TOLERANCE OF VARIOUS CROPS AT GERMINATION[1]

Crop		50 percent Emergence reduction (ECe in dS/m)
Barley	*(Hordeum vulgare)*	16 - 24
Cotton	*(Gossypium hirsutum)*	15.5
Sugarbeet	*(Beta vulgaris)*	6 - 12.5
Sorghum	*(Sorghum bicolor)*	13
Safflower	*(Carthomus tinctorius)*	12.2
Wheat	*(Triticum aestivum)*	14 - 16
Beet, red	*(Beta vulgaris)*	13.8
Alfalfa	*(Medicago sativa)*	8.2 - 13.4
Tomato	*(Lycopersicon Lycopersicum)*	7.6
Rice	*(Oryza sativa)*	18
Cabbage	*(Brassica oleracea capitata)*	13
Muskmelon	*(Cucumis melo)*	10.4
Maize	*(Zea mays)*	21 - 24
Lettuce	*(Lactuca sativa)*	11.4
Onion	*(Allium cepa)*	5.6 - 7.5
Bean	*(Phaseolus vulgaris)*	8.0

[1] Data taken from Maas (1984).

Table E-9

Relative boron tolerance of agricultural crops (1), (2)

Very Sensitive (<0.5 mg/L)

Lemon	*Citrus Limon*
Blackberry	*Rubus spp.*

Sensitive (0.5-0.75 mg/L)

Avocado	*Persea americana*
Grapefruit	*Citrus X paradisi*
Orange	*Citrus sinensis*
Apricot	*Prunus armeniaca*
Peach	*Prunus persica*
Cherry	*Prunus avium*
Plum	*Prunus domestica*
Persimmon	*Diospyros Kaki*
Fig, Kadota	*Ficus carica*
Grape	*Vitis vinifera*
Walnut	*Juglans regia*
Pecan	*Carya illnoiensis*
Cowpea	*Vigna unguiculata*
Onion	*Allium cepa*

Sensitive (o.75-1.0 mg/L)

Garlic	*Allium sativum*
Sweet potato	*Ipomoea batatas*
Wheat	*Triticum eastivum*
Barley	*Hordeum vulgare*
Sunflower	*Helianthus anraius*
Bean, mung	*Vigna radiata*
Sesame	*Sesamum indicum*
Lupine	*Lupinus hartwegii*
Strawberry	*Fragaria spp.*
Artichoke, Jerusalem	*Helianthus tuberosus*
Bean, Kidney	*Phaseolus vulgaris*
Bean, lima	*Phaseolus lunatus*
Groundnut/Peanut	*Arachis hypogaea*

Moderately Sensitive (1.0-2.0 mg/L)

Pepper, red	*Capsicum crucum*
Pea	*Pisum sativa*
Carrot	*Daucus carota*
Radish	*Raphanus sativus*
Potato	*Solanum tuberosum*
Cucumber	*Cucumis sativus*

Moderately Tolerant (2.0-4.0 mg/L)

Lettuce	*Lactuca sativa*
Cabbage	*Brassica oleracea capitata*
Celery	*Apium graveolens*
Turnip	*Brassica rapa*
Bluegrass, Kentucky	*Poa pratensis*
Oats	*Avena sativa*
Maize	*Zea mays*
Artichoke	*Cynara scolymus*
Tobacco	*Nicotiana tabacum*
Mustard	*Brassica juncea*
Clover, sweet	*Melilotus indica*
Squash	*Cucurbita pepo*
Muskmelon	*Cucumis melo*

Tolerant (4.0-6.0 mg/L)

Sorghum	*Sorghum bicolor*
Tomato	*Lycopersicon Lycopersicum*
Alfalfa	*Medicago sativa*
Vetch, purple	*Vicia benghalensis*
Parsley	*Petroselinum crispum*
Beet, red	*Beta vulgaris*
Sugarbeet	*Beta vulgaris*

Very Tolerant (6.0-15.0 mg/L)

Cotton	*Gossypium hirsutum*
Asparagus	*Asparagus officinalis*

---

(1) Data taken from Maas (1984)
(2) Maximum concentrations tolerated in soil-water without yield or vegetative growth reductions. Boron tolerance: vary depending upon climate, soil conditions and crop varieties. Maximum concentrations in the irrigation wate are approximately equal to these values or slightly less.

Source: FAO Guidelines, R.S. Ayers & D.W. Westcot (1985).

Table E-10

Relative tolerance of selected crops to exchangeable sodium (1).

Sensitive (2)	Semi-tolerant(2)	Tolerant(2)
Avocado	Carrot	Alfalfa
(Persea americana)	*(Daucus carota)*	*(Medicago sativa)*
Deciduous Fruits	Clover, Ladino	Barley
Nuts	*(Trifolium repens)*	*(Hordeum vulgare)*
Bean, green	Dallisgrass	Beet, garden
(Phaseolus vulgaris)	*(Paspalum dilatatum)*	*(Beta vulgaris)*
Cotton *(at germination)*	Fescue, tall	Beet, sugar
(Gossypium hirsutum)	*(Festuca arundinacea)*	*(Beta vulgaris)*
Maize	Lettuce	Bermuda grass
(Zea mays)	*(Lactuca sativa)*	*(Cynodon dactylon)*
Peas	Bajara	Cotton
(Pisum sativum)	*(Pennisetum typhoides)*	*(cossypium hirsutum)*
Grapefruit	Sugarcane	Paragrass
(Citrus paradisi)	*(Saccharum officinarum)*	*(Brachicria mutica)*
Orange	Berseem	Rhodes grass
(Citrus sinensis)	*(Trifolium alexandrinum)*	*(Chloris gayana)*
Peach	Benji	Wheatgrass, crested
(Prunus persica)	*(Melilotus parviflora)*	*(Agropyron cristatum)*
Tangerine	Raya	Wheatgrass, fairway
(Citrus reticulata)	*(Brassica juncea)*	*(Agropyron cristatum)*
Mung	Oat	Wheatgrass, fairway tall
(Phaseolus aurus)	*(Avena sativa)*	*(Agropyron slongatum)*
Mash	Onion	Karnal grass
(Phaseolus mungo)	*(Allium cepa)*	*(Diplachra fusca)*
Lentil	Radish	
(Lens culinaris)	*(Raphanus sativus)*	
Groundnut *(peanut)*	Rice	
(Arachis hypogaea)	*(Oryza sativus)*	
Cram	Rye	
(Cicer arietirum)	*(Secale cereale)*	
Cowpeas	Ryegrass, Italian	
(Vigna sinensis)	*(Lolium multiflorum)*	
	Sorghum	
	(Sorghum vulgare)	
	Spinach	
	(Spinacia oleracea)	
	Tomato	
	(Lycopersicon esculentum)	
	Vetch	
	(Vicia sativa)	
	Wheat	
	(Triticum vulgare)	

Adapted from data of FAO-Unesco (1973); Pearson (1960); and Abrol (1982).
Source: FAO Guidelines, R.S. Ayers & D.W. Westcot (1985).

Table E-11

LABORATORY DETERMINATIONS NEEDED TO EVALUATE COMMON IRRIGATION WATER QUALITY PROBLEMS

Water parameter	Symbol	Unit[1]	Usual range in irrigation water	
SALINITY				
Salt Content				
Electrical Conductivity	EC_w	dS/m	0 - 3	dS /m
(or)				
Total Dissolved Solids	TDS	mg/l	0 - 2000	mg/l
Cations and Anions				
Calcium	Ca^{++}	me/l	0 - 20	me/l
Magnesium	Mg^{++}	me/l	0 - 5	me/l
Sodium	Na^{+}	me/l	0 - 40	me/l
Carbonate	CO_3^{--}	me/l	0 - .1	me/l
Bicarbonate	HCO_3^{-}	me/l	0 - 10	me/l
Chloride	Cl^{-}	me/l	0 - 30	me/l
Sulphate	SO_4^{--}	me/l	0 - 20	me/l
NUTRIENTS[2]				
Nitrate - Nitrogen	NO_3 - N	mg/l	0 - 10	mg/l
Ammonium - Nitrogen	NH_4 - N	mg/l	0 - 5	mg/l
Phosphate - Phosphorus	PO_4 - P	mg/l	0 - 2	mg/l
Potassium	K^{+}	mg/l	0 - 2	mg/l
MISCELIANEOUS				
Boron	B	mg/l	0 - 2	mg/l
Acid / Basicity	pH	1 - 14	6.0 - 8.5	
Sodium Adsorption Ratio[3]	SAR	(me/l)[1,2]	0 - 15	

1. dS/m = desiSiemen/meter in S.I. units (equivalent to 1 mmho / cm - 1 millimmho / centimeter)
   mg/l = milligram per litre ~ parts per million (ppm).
   me/l = milliequivalent per litre (mg/l ÷ equivalent weight = me/l); in SI units, 1 me/l = 1 millimol / litre adjusted for electron charge.
2. NO_3-N means the laboratory will analyse for NO_3 but will report the NO_3 in terms of chemically equivalent nitrogen. Similarly, for NH_4-N, the laboratory will analyse for NH_4 but report in terms of chemically equivalent elemental nitrogen. The total nitrogen available to the plant will be the sum of the equivalen elemental nitrogen.
   The same reporting method is used for phosphorus.
3. SAR is calculated from the Na, Ca and Mg reported in me/l.

Table E-12

Crop tolerence and yield potential of selected crops as influenced by irrigation water salinity (ECw) or soil salinity (ECe)

	Yield potential (2)									
	100%		90%		75%		50%		0% maximum(3)	
	ECe	ECw	ECe	ECw	ECe	ECw	ECe	ECw	ECe	ECw
Field crops										
Barley *(Hordeum Vulgare)* (4)	8.0	5.3	10	6.7	13	8.7	18	12	28	19
Cotton *(Gossypium hirsutum)*	7.7	5.1	9.6	6.4	13	8.4	17	12	27	18
Sugarbeet *(Beta vulgaris)* (5)	7.0	4.7	8.7	5.8	11	7.5	15	10	24	16
Sorghum *(Sorghum bicolor)*	6.8	4.5	7.4	5.0	8.4	5.6	9.9	6.7	13	8.7
Wheat *(Triticum aestivum)* (4), (6)	6.0	4.0	7.4	4.9	9.5	6.3	13	8.7	20	13
Wheat durum *(Triticum turgidum)*	5.7	3.8	7.6	5.0	10	6.9	15	10	24	16
Soyabean *(Glycine max)*	5.0	3.3	5.5	3.7	6.3	4.2	7.5	5.0	10	6.7
Cowpea *(Vigna unguiculata)*	4.9	3.3	5.7	3.8	7.0	4.7	9.1	6.0	13	8.8
Groundnut *(peanut)* *(Arachis hypogaea)*	3.2	2.1	3.5	2.4	4.1	2.7	4.9	3.3	6.6	4.4
Rice *(paddy)* *(Oriza sativa)*	3.0	2.0	3.8	2.6	5.1	3.4	7.2	4.8	11	7.6
Sugarcane (Saccharum officinarum)	1.7	1.1	3.4	2.3	5.9	4.0	10	6.8	19	12
Corn *(maize)* *(Zea mays)*	1.7	1.1	2.5	1.7	3.8	2.5	5.9	3.9	10	6.7
Flax *(Linum usitatissimum)*	1.7	1.1	2.5	1.7	3.8	2.5	5.9	3.9	10	6.7
Broadbean *(Vicia faba)*	1.5	1.1	2.6	1.8	4.2	2.0	6.8	4.5	12	8.0
Bean *(phaseolus vulgaris)*	1.0	0.7	1.5	1.0	2.3	1.5	3.6	2.4	6.3	4.2
Vegetable crops										
Squash zucchini *(courgette)* *(Cucurbita pepo melopepo)*	4.7	3.1	5.8	3.8	7.4	4.9	10	6.7	15	10
Beet, red *(Beta vulgaris)*(5)	4.0	2.7	5.1	3.4	6.8	4.5	9.6	6.4	15	10
Squash, scallop *(Cucurbita pepo melopepo)*	3.2	2.1	3.8	2.6	4.8	3.2	6.3	4.2	9.4	6.3
Broccoli *(Brassica oleracea botrytis)*	2.8	1.9	3.9	2.6	5.5	3.7	8.2	5.5	14	9.1
Tomato *(Laycopersicon esculentum)*	2.5	1.7	3.5	2.3	5.0	3.4	7.6	5.0	13	8.4
Cucumber *(Cucumis sativus)*	2.5	1.7	3.3	2.2	4.4	2.9	6.3	4.2	10	6.8
Spinach *(Spinacia olerucea)*	2.0	1.3	3.3	2.2	5.3	3.5	8.6	57	15	10
Celery *(Apium graveolens)*	1.8	1.2	3.4	2.3	5.8	3.9	9.9	66	18	12
Cabbage *(Brassica oleracea capitata)*	1.8	1.2	2.8	1.9	4.4	2.9	7.0	4.6	12	8.1
Potato *(Solanum tuberosum)*	1.7	1.1	2.5	1.7	3.8	2.5	5.9	3.9	10	6.7
Corn, sweet *(maize)* *(Zea mays)*	1.7	1.1	2.5	1.7	3.8	2.5	5.9	3.9	10	6.7
Sweet potato *(Impomoea batatas)*	1.5	1.0	2.4	1.6	3.8	2.5	6.0	4.0	11	7.1
Pepper *(Capsicum annuum)*	1.5	1.0	2.2	1.5	3.3	2.2	5.1	3.4	8.6	5.8
Lettuce *(Lactuca sativa)*	1.3	0.9	2.1	1.4	3.2	2.1	5.1	3.4	9.0	6.0
Radish *(Raphanus sativus)*	1.2	0.8	2.0	1.3	3.1	2.1	5.0	3.4	8.9	5.9
Onion *(Allium cepa)*	1.2	0.8	1.8	1.2	2.8	1.8	4.3	2.9	7.4	5.0
Carrot *(Daucus carota)*	1.0	0.7	1.7	1.1	2.8	1.9	4.6	3.0	8.1	5.4
Bean *(Phaseolus vulgaris)*	1.0	0.7	1.5	1.0	2.3	1.5	3.6	2.4	6.3	4.2
Turnip *(Phaseolus vulgaris)*	0.9	0.6	2.0	1.3	3.7	2.5	6.5	4.3	12	8.0
Forage crops										
Wheatgrass, tall *(Agropyron elongatum)*	7.5	5.0	9.9	6.6	13	9.0	19	13	31	21
Wheatgrass, fairway crested *(Agropyron oristatum)*	7.5	5.0	9.0	6.0	11	7.4	15	9.8	22	15
Bermuda grass *(Cynodon dactylon)* (7)	6.9	4.6	8.5	5.6	11	7.2	15	9.8	23	15
Barley *(forage)* *(Hordeum vulgare)* (4)	6.0	4.0	7.4	4.9	9.5	6.4	13	8.7	20	13
Ryegrass, perennial *(Lolium perenne)*	5.6	3.7	6.9	4.6	8.9	5.9	12	8.1	19	13
Trefoil, narrowleaf birdsfoot (8) *(Lotus corniculatus tenuifolium)*	5.0	3.3	6.0	4.0	7.5	5.0	10	6.7	15	10

Table E-12 Continued

	Yield potential									
	100%		90%		75%		50%		0%maximum (3)	
	ECe	ECw	ECe	ECw	ECe	ECw	ECe	ECw	Ece	ECw
Harding grass *(Phalaris tuberosa)*	4.6	3.1	5.9	3.9	7.9	5.3	11	7.4	18	12
Fescue, tall *(Festuca elatior)*	3.9	2.6	5.5	3.6	7.8	5.2	12	7.8	20	13
_Wheatgrass, standard crested *(Agropyron sibiricum)*	3.5	2.3	6.0	4.0	9.8	6.5	16	11	28	19
Vetch, common *(Vicia angustifolia)*	3.0	2.0	3.9	2.6	5.3	3.5	7.6	5.0	12	8.1
Sudan grass *(Sorghum sudanense)*	2.8	1.9	5.1	3.4	8.6	5.7	14	9.6	26	17
Wildrye, beardless *(Elymus truicoides)*	2.7	1.8	4.4	2.9	6.9	4.6	11	7.4	19	13
Cowpea *(forage)* *(Vigna unguiculata)*	2.5	1.7	3.4	2.3	4.8	3.2	7.1	4.8	12	7.8
Trefoil, big *(Lotus uliginosus)*	2.3	1.5	2.8	1.9	3.6	2.4	4.9	3.3	7.6	5.0
Sesbania *(Sesbania exaltata)*	2.3	1.5	3.7	2.5	5.9	3.9	9.4	6.3	17	11
Sphaerophysa *(Sphaerophysa salsula)*	2.2	1.5	3.6	2.4	5.8	3.8	9.3	6.2	16	11
Alfalfa *(Medicago sativa)*	2.0	1.3	3.4	2.2	5.4	3.6	8.8	5.9	16	10
Lovegrass *(Eragrostis sp.)* (9)	2.0	1.3	3.2	2.1	5.0	3.3	8.0	5.3	14	9.3
Corn *(forage)* *(maize)* *(Zea mays)*	1.8	1.2	3.2	2.1	5.2	3.5	8.6	5.7	15	10
Clover, berseem *(Trifolium alexundrinum)*	1.5	1.0	3.2	2.2	5.9	3.9	10	6.8	19	13
Orchard grass *(Dactylis glomerata)*	1.5	1.0	3.1	2.1	5.5	3.7	9.6	6.4	18	12
Foxtail, meadow *(Alopecurus pratenis)*	1.5	1.0	2.5	1.7	4.1	2.7	6.7	4.5	12	7.9
Clover, red *(Trifolium pratense)*	1.5	1.0	2.3	1.6	3.6	2.4	5.7	3.8	9.8	6.6
Clover, alsika *(Trifolium hybridum)*	1.5	1.0	2.3	1.6	3.6	2.4	5.7	3.8	9.8	6.6
Clover, ladino *(Trifolium repens)*	1.5	1.0	2.3	1.6	3.6	2.4	5.7	3.8	9.8	6.6
Clover, strawberry *(Trifolium fragiferum)*	1.5	1.0	2.3	1.6	3.6	2.4	5.7	3.8	9.8	6.6
_Fruit crops (10)										
Date palm *(Phoenix dactylifera)*	4.0	2.7	6.8	4.5	11	7.3	18	12	32	21
Grapefruit *(Citrus paradisi)* (11)	1.8	1.2	2.4	1.6	3.4	2.2	4.9	3.3	8.0	5.4
Orange *(Citrus sinensis)*	1.7	1.1	2.3	1.6	3.3	2.2	4.8	3.2	8.0	5.3
Peach *(Prunus persica)*	1.7	1.1	2.2	1.5	2.9	1.9	4.1	2.7	6.5	4.3
Apricot *(Prunus armeniaca)* (11)	1.6	1.1	2.0	1.3	2.6	1.8	3.7	2.5	5.8	3.8
Grape *(Vitus sp.)* (11)	1.5	1.0	2.5	1.7	4.1	2.7	6.7	4.5	12	7.9
Almond *(Prunus dulcis)* (11)	1.5	1.0	2.0	1.4	2.8	1.9	4.1	2.8	6.8	4.5
Plum, prune *(Prunus domestica)* (11)	1.5	1.0	2.1	1.4	2.9	1.9	4.3	2.9	7.1	4.7
Blackberry *(Rubus sp.)*	1.5	1.0	2.0	1.3	2.6	1.8	3.8	2.5	6.0	4.0
Boysenberry *(Rubus ursinus)*	1.5	1.0	2.0	1.3	2.6	1.8	3.8	2.5	6.0	4.0
Strawberry *(Fragaria sp.)*	1.0	0.7	1.3	0.9	1.8	1.2	2.5	1.7	4.0	2.7

(1) Adapted from Maas and Hoffman (1977) and Maas (1984). These data should only serve as a guide to relative tolerances among crops. Absolute tolerances vary depending upon climate, soil conditions and cultural practices. In gypsiferous soils, plants will tolerate about 2ds/m higher soil salinity (ECe) than indicated but the water salinity (ECw) will remain the same as shown in this tabel.

(2) ECe means average root zone salinity as measured by electrical conductivity of the saturation extract of the soil, reported in decisiemens per meter (ds/m) at 25C. ECw means electical conductivity of the irrigation water in deci Siemens per meter (ds/m). The relationship between soil salinity and water salinity (ECe=1.5 ECw) assumes a 15-20 leaching fraction and a 40-30-20-10% water use pattern for the upper to lower quarters of the root zone.

(3) The zero yield potential or maximum ECe indicates the theoretical soil salinity (ECe) at which crop growth ceases.

(4) Barley and wheat are less tolerant during germination and seedling stage : ECe should not exceed 4 - 5 dS/m in the upper soil during this period.

(5) Beets are more sensitive during germination : ECe should not exceed 3 ds/m in the seedling area for garden beets and sugar beets.

(6) Semi-dwarf, short cultivars may be less tolerant.

(7) Tolerance given is an average of several varieties : Suwannee and Coastal Bermuda grass are about 20% more tolerant, while common and Greenfield Bermuda grass are about 20% less tolerant.

(8) Broadleaf Birdsfoot Trefoil seems less tolerant than Narrowleaf Birdsfoot Trefoil.

(9) Tolerance given is an average for boer. Wilman, Sand and Weeping Lovegrass ; Lehman Lovegrass seems about 50% more tolerant.

(10) These data are applicable when rootstocks are used that do not accumulate Na^+ and Cl^- rapidly or when these ions do not predominate in the soil.

(11) Tolerance evaluation is based on tree growth and not on yeild.

Source: FAO Guidelines, R.S. Ayers & D.W. Westcot (1985).

Table E-13
Summary of requirements of Jordanian Standard 893/1994 for treated domestic wastewater.

Parameter	Maximum allowable limit (mg/L)*	
	Disposed to wadis, rivers, surface water bodies, and groundwater recharge	Reuse for irrigation
pH	6.5-9	6.5-9
Temperature change (C°)	<3	-
D.O	≥1	-
TDS	3000	2000 (1)
TSS	50(3) / 200(4)	100 (1)
BOD5	50(3) / 50(4)	-
COD	150(3) / 150(4)	-
NH3	30	-
FOG	15	15
ABS	6	-
Cl2	0.5 (5)	-
Phenol	0.5	-
TFCC MPN/100mL	<1000	<1000 (6)
Intestinal nematodes	<1	<1 (6)

* All units are in mg/L except where noted.

(1) Depends on degree of restriction (none, slight to moderate, or severe).

(2) Depends on method of irrigation.

(3) Conventional wastewater treatment plants.

(4) Waste stabilization ponds.

(5) This is a minimum limit of residual chlorine and it should be linked with total faecal coliform count.

(6) FAO and WHO guidelines and their amendments should be taken into consideration.

Table E-14

Summary of Jordanian Regulations Governing Discharge of Industrial and Commercial Wastewater Into the Sanitary Sewer System.*

Parameter	Unit	Maximum Allowable Limit
pH	Su	5.5-9.5
BOD	mg/1	800
COD	mg/1	2100
TSS	mg/1	1100
P	mg/1	50
FOG	mg/1	50
MBAS	mg/1	26
Phenol	mg/1	10
Cr**	mg/1	5
Cu**	mg/1	4.5
Zn**	mg/1	15
Sn	mg/1	10
Be	mg/1	5
Ni**	mg/1	4
Cd**	mg/1	1
As	mg/1	5
Ba	mg/1	10
Pb**	mg/1	0.6
Mn	mg/1	10
Ag**	mg/1	1
B	mg/1	5
Hg**	mg/1	0.5
Fe	mg/1	50
S (as H_2S)	mg/1	10
Temp	°C	65
Chlorinated Solvents	mg/1	0

* Published in the Official Gazette, September 17, 1988

** The total concentration of all the double asterisked materials should not exceed 10 mg/1

It is not permitted to dispose any liquids or materials which have cyanides in a concentration which can produce 1 mg/1 HCN or more

It is not permitted to dispose any radioactive material without written approval from WAJ.

APPENDIX F

AL HUSSEIN THERMAL ELECTRIC POWER STATION PHOTOS

AL HUSSIEN THERMAL ELECTRIC POWER STATION PHOTOS

AUDIT REPORT
Thermal Power Industry
Amman, Jordan

View of the HTPS from the scrap metal yard

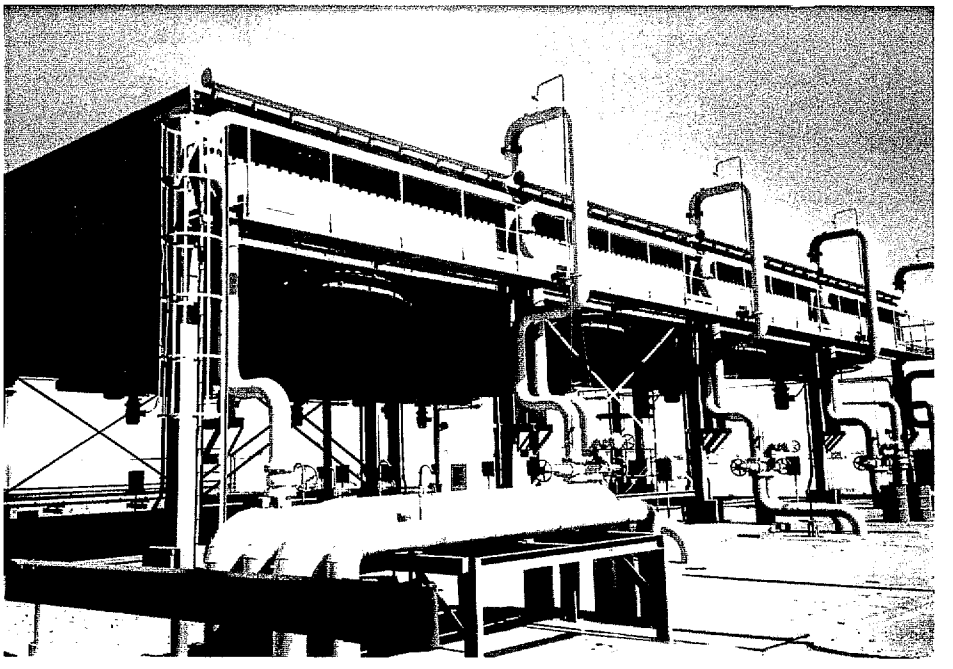

Forced Air Cooling System

AL HUSSIEN THERMAL ELECTRIC POWER STATION PHOTOS

AUDIT REPORT
Thermal Power Industry
Amman, Jordan

Oil/Water Separator

Used batteries located in scrap yard

153

AL HUSSIEN THERMAL ELECTRIC POWER STATION PHOTOS

AUDIT REPORT
Thermal Power Industry
Amman, Jordan

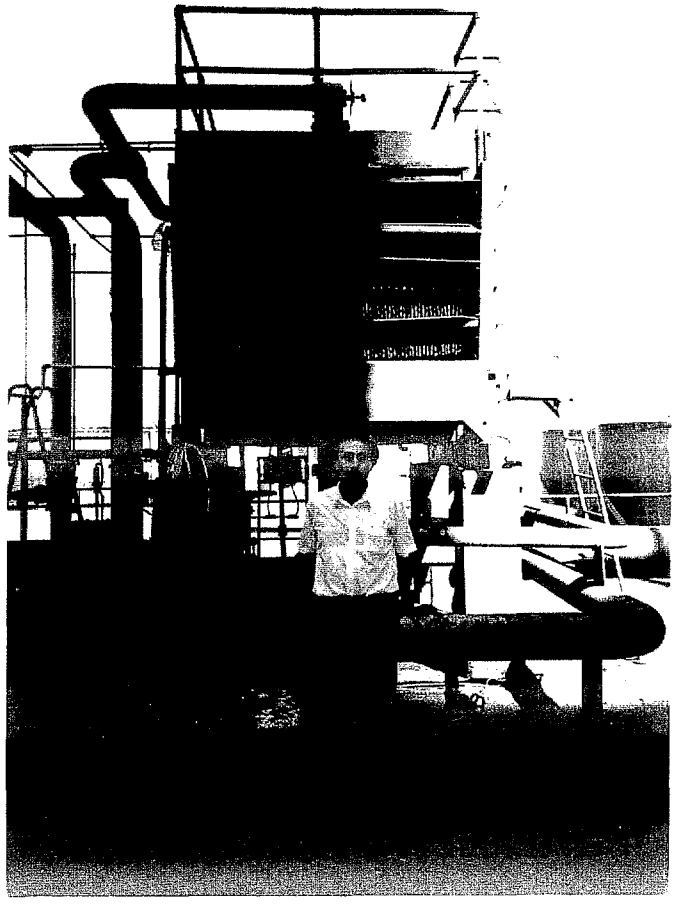

Wet Cooling Tower

Trees located in irrigation area