PN-ABY-035

98412

AFR 3114-77-2b-10

The Hashemite Kingdom of Jordan

Ministry of Water and Irrigation

Water Quality Improvement and Conservation Project

AUDIT REPORT:

Jordan Sulpho-Chemicals Company

Science Applications International Corp.

Development Alternatives, Inc.

USAID

The Technical Assistance Team Includes:

Development Alternatives, Inc.
Science Applications International Corp.
Harza Environmental Services, Inc.
Development Associates, Inc.

United States Agency for International Development
Contract No. 278-0288-00-C-4026-00

December 1994

PREFACE/ACKNOWLEDGMENTS

This report is the result of a 4-week study/audit/evaluation of the Jordan Sulpho-Chemicals Company (JSC), Jordan. The purpose of the study was to evaluate and identify potential pollution prevention/waste minimization and water conservation techniques which are appropriate. The executive summary on the following pages outlines the consultants findings and actions during the study/audit/evaluation.

Several individuals on the Water Quality Improvement and Conservation Project contributed to this report. Dr. Usama Mudallal of the Amman Chamber of Industry (Chamber); Engineer Rania Abdul Khaleq of the Ministry of Water and Irrigation (MWI); Mr. Hamed Abu Obeid, of the Water Autority of Jordan (WAJ); and Dr. Riyad Musa and Eng. Rafat Assi of the Royal Scientific Society of Amman; shared their knowledge with Mr. David Hair, of Science Application International Corp., Falls Church, VA, USA. These technical staff worked under the direction of Dr. Shawn R. Niaki, P.E., Pollution Prevention Program Director, of Harza Consulting Engineers and Scientists (Harza), Chicago, USA., who heads the WQIC component under which the study/audit/evaluation was housed. It is from their combined expertise that this report was possible.

Special appreciation is given to Dr. Mohammed Bani Hani, Secretary General of MWI; Eng. Qusai Qushad, Secretary General of WAJ; Mr. Kaldun Abuhassan, Chairman of the Chamber; Mr. Walid Al-Khathib, Director General of the Chamber; Dr. Muwaffaq Saqqar, Project Coordinator; Dr. Raja Gadoun, Director of the WAJ Laboratories; Eng. Randa Dufaha of theWAJ Laboratories; the members of the PP/WM working group from WAJ including Eng. Abdul Wahab Matar, Eng. Marwan Al-Tal, Eng. Nabeel Hejazeen, Eng. Mohamad Lafi; and to Development Alternatives, Inc., as represented by Edwin D. Stains, Chief of Party; for their cooperation and confidence.

Also, special appreciation is given to the JSC management and staff for their cooperation during the conduct of the audit. In particular, Mr. Hatem Abbas, Technical Manager, and Mr. Said Abdullah, provided detailed facility information and assisted the audit team during all phases of the site visits.

TABLE OF CONTENTS

PAGE

ACKNOWLEDGEMENTS . . . . . **i**

EXECUTIVE SUMMARY **ES-1**

1.0 INTRODUCTION **1**

1.1 BACKGROUND 1
1.2 OBJECTIVES 2
1.3 REPORT CONTENTS 3

2.0 PROCESS OVERVIEW **4**

2.1 TYPICAL INDUSTRY PRACTICES 4

2.1.1 Sulfonation/Sulfation 4
2.1.2 Saponification 4
2.1.3 Sodium Silicate Production 5
2.1.4 Sodium Toluene Sulfonate Production 6
2.1.5 Alkanolamides Production 6

2.2 PROCESS OPERATIONS AT THE JORDAN SULPHO-CHEMICALS COMPANY FACILITY 6

2.2.1 Sulfonation/Sulfation 6
2.2.2 Saponification 8
2.2.3 Sodium Silicate Production 9
2.2.4 Sodium Toluene Sulfonate Production 9
2.2.5 Alkanolamides Production 10

3.0 AUDIT PROCESS **11**

3.1 AUDIT COORDINATION 11
3.2 PP/WM BACKGROUND MATERIALS 11
3.3 PRE-INSPECTION MEETING 11
3.4 AUDIT 12
3.5 POST-INSPECTION MEETING 12

PAGE

4.0 AUDIT FINDINGS 13

4.1 WATER USE AND BALANCE 13

4.1.1 Sulfonation/Sulfation 13
4.1.2 Saponification 14
4.1.3 Sodium Silicate Production 15
4.1.4 Sodium Toluene Sulfonate Production 15
4.1.5 Alkanolamides Production 16
4.1.6 Cooling, Steam, and Other Water Uses 16

4.2 WASTEWATER DISCHARGES 16

4.2.1 Process Wastestreams 17
4.2.2 Materials Handling and Storage 21
4.2.3 Waste Collection Basin 23

4.3 AIR EMISSIONS AND SOLID WASTES 24
4.4 DATA GAPS 26

5.0 POLLUTION PREVENTION AND WASTE MINIMIZATION OPPORTUNITIES . . 28

5.1 PROCESS CONTROL 29
5.2 MATERIALS HANDLING AND STORAGE 31
5.3 CONTROL OF OTHER WASTE GENERATING ACTIVITIES 32

5.3.1 Solid and Drummed Wastes 32
5.3.2 Utilities Wastes 33
5.3.3 Waste Collection Basin 34

6.0 WATER CONSERVATION OPPORTUNITIES 35

6.1 PROCESS CONTROL 35
6.2 COOLING AND BOILER WATER 37
6.3 FLOOR WASH AND CLEANING ACTIVITIES 37

7.0 CONCLUSIONS AND RECOMMENDATIONS 38

7.1 CONCLUSIONS 38
7.2 RECOMMENDATIONS 39

7.2.1 Process Operations 39
7.2.2 Materials Handling and Storage 41
7.2.3 Control of Other Waste Generating Activities 42

8.0 FOLLOW-UP ACTIONS 44

APPENDICES

Appendix A	Audit Questionnaire
Appendix B	Information Provided by the JSC Facility
Appendix C	Overview of the Regulations Applicable to the JSC Discharge
Appendix D	Site Visit Photographs
Appendix E	References
Appendix F	PP/WM Background Report

TABLES

Table 1	Products Manufactured at the JSC Facility
Table 2	Wastewater Discharges to the Waste Collection Basin
Table 3	Waste Collection Basin Sampling Results
Table 4	Water Consumption at the JSC Facility
Table 5	Potential Water Savings for the JSC Facility

FIGURES

Figure 1	Process Flow Diagram of the Sulfonation Plant
Figure 2	Sulfonation Exhaust Gas Treatment Unit
Figure 3	Process Flow Diagram of the Saponification Plant
Figure 4	Process Flow Diagram of the Sodium Silicate Melting Plant
Figure 5	Process Flow Diagram of the Sodium Silicate Dissolution Plant
Figure 6	Process Flow Diagram of Sodium Toluene Sulfonate Production
Figure 7	Process Flow Diagram of Alkanolamides Production
Figure 8	Facility Water Balance
Figure 9	Facility Location Plan

EXECUTIVE SUMMARY

Introduction

Under contract number 278-0288-00-4026-00 with the United States Agency for International Development (USAID), Development Alternatives, Inc. (DAI) is performing an Industrial Wastewater Discharge Prevention (IWDP) Program in Amman, Jordan. The IWDP Program is one of the four components of the Water Quality Improvement and Conservation (WQIC) project funded by USAID. The Program is being performed by DAI with full coordination between the Jordanian Ministry of Water and Irrigation (MWI) and the Amman Chamber of Industry (Chamber).

This report provides the findings of the audit conducted at the Jordan Sulpho-Chemicals Company (JSC) facility on September 20, 1994, and the results of the subsequent discharge monitoring conducted by the audit team on September 25, 1994. The report provides recommendations for the development of a site-specific program that meets the specific needs and goals of the JSC facility. Audit recommendations include both pollution prevention and waste minimization (PP/WM) techniques (e.g., water conservation techniques, housekeeping practices, alternate waste disposal practices, etc.) and suggestions for PP/WM training for facility staff and follow-up studies to assess program successes.

Process Overview

The JSC facility produces a variety of chemical products used to manufacture soaps, detergents and cleaning products. Most of the chemicals produced are sulfur-based; however, the facility also produces sodium silicate and fatty acid amides which do not contain sulfur. The major production plants in the JSC facility include the following:

- Sulfonation/Sulfation Plant
- Saponification Plant
- Sodium Silicate Melting and Dissolution Plant
- Sodium Toluene Sulfonate (STS) Plant
- Alkanolamides Plant

Audit Findings

Water Use and Balance

The JSC facility's total water requirement was dependent on whether water was supplied by tanker or drawn from JSC's private well. Where water was received from tankers, the facility required approximately 90 m^3 per day of fresh water for all uses except potable water. When the RO unit was in operation, the facility water use increased to approximately 110 m^3/day due to the RO reject and membrane washing streams.

The specific water uses for each of the major plant areas of the JSC operation are described below.

Sulfonation/Sulfation

Excluding the central cooling and steam systems, the total water used in the sulfonation plant was approximately 9.7 m^3/day, or 11 percent of the total facility water consumption. Water was used in the sulfonation/sulfation plant for the following purposes:

- Raw Material Dissolution
- Scrubber Water
- Product Stabilization
- Contact Cooling
- Cleaning

In addition to these process specific uses, the sulfonation plant also used non-contact cooling water and steam from the facility-wide recirculated cooling system, and the steam was from the central boiler system.

Saponification

Excluding the central cooling and steam systems, the saponification plant used approximately 6.5 m^3/day of fresh water, or about 7 percent of the total facility consumption. Water was used in the saponification plant for the following purposes:

- Raw Material Dissolution
- Process
- Cooling and Steam
- Cleaning

In addition to these process specific uses, the saponification plant also used non-contact cooling water and steam from the facility-wide recirculated cooling system, and the steam was from the central boiler system.

Sodium Silicate Production

The total water consumption for the sodium silicate plant (melting and dissolution) was estimated to be 20.8 m^3/day, or 23 percent of the total facility water consumption. Water was used in the sodium silicate plant for the following purposes:

- Dust Control
- Contact Cooling
- Product Dissolution
- Filter Washing
- Cleaning

Sodium Toluene Sulfonate Production

Water consumption in the STS plant was estimated to be 1.7 m^3/day, or about 2 percent of the total facility consumption. Water was used in the STS plant for the following purposes:

- Raw Material Dissolution
- Process
- Cleaning

In addition to these process specific uses, the STS plant used non-contact cooling water and steam from the facility-wide recirculated cooling system, and the steam was from the central boiler system.

Alkanolamides Production

In general, the processes used for manufacturing alkanolamides did not use water.

Cooling, Steam, and Other Water Uses

The JSC facility utilized a recirculated cooling system for process temperature control, and other various uses, for all plant operations except sodium silicate melting and dissolution. Make-up water was added as needed for losses due to blowdown, evaporation, and leakage, and was estimated at 6 m^3/day.

The JSC facility also used a central boiler system to generate all of the steam used for process throughout the operation. The JSC facility staff indicated that approximately 36 m^3/day of make-up water, or about 40 percent of the total water consumption at the JSC facility, was needed to maintain the steam system.

The JSC facility reported that water was also used for cleaning tanker trucks, domestic uses, and for limited irrigation for landscaping. These uses were considered minimal and did not significantly effect water consumption.

Wastewater Discharges

All routine discharges of process wastewater from the JSC facility were collected and directed to the central wastewater collection basin. Discharges to the basin included all process wastestreams, cooling water system blowdown, boiler blowdown, cleaning and maintenance discharges, and leaks and spills within the plant processing areas. The waste collection basin reportedly has no effluent discharge to the wadi or groundwater; however, its proper operation and maintenance are imperative for protecting local surface and groundwater resources.

While all wastestreams flow to the collection basin during normal operations, the facility reported that in wet weather, all process and stormwater flows are directed directly to the wadi. Based on general drainage characteristics of the facility, many of the areas where solid and liquid wastes are stored would also drain directly to the wadi.

Process Wastestreams

Sulfonation

The following wastestreams were identified by the audit team:

- Cooling Water and Condensate
- Contact Cooling Water
- Cyclone Discharge
- ESP Discharge
- Scrubber Discharge
- Dryer Condensate
- Cleaning Water

Saponification

The audit team determined that during normal operation there was no discharge of wastewater from the saponification process. A wastestream, however, was generated during cleaning and maintenance activities.

Sodium Silicate Production

The processes involved in the production and dissolution of sodium silicate resulted in the generation of several wastestreams. The following discharges were identified:

- Contact Cooling Water
- Storage Tank Sediment
- Filtered Solids
- Cleaning Water

Sodium Toluene Sulfonate Production

The STS manufacturing plant generated wastewater during the reaction process as well as from product drying and area maintenance. The following wastestreams were identified:

- Process Wastestream
- Dryer Condensate
- Cleaning Water
- Contaminated Cooling Water

Alkanolamides Production

The production of alkanolamides from fatty acids generated a wastestream during the reaction process. Vapor from the reactor was condensed, cooled, and separated into two phases; aqueous, and "pasty waste."

When alkanolamides were produced from methyl esters, the vapors generated by the process contained methanol. The methanol produced by the reaction was collected by JSC and sold as a useful by-product.

Cooling Water, Boilers and Other Waste Generating Activities

The JSC facility maintained a water treatment system, a centralized cooling water system, a centralized steam generation unit, and had several other miscellaneous water uses. Several of these activities generated significant wastewater discharges. These wastestreams included:

- Groundwater Well Sediment
- RO Reject
- Softener Regenerate
- Boiler Blowdown
- Oil Spill Clean-up
- Cooling System Blowdown
- Tanker Washing
- Domestic Wastewater

Materials Handling and Storage

During the site visit to the JSC facility, the audit team noted several areas within the JSC facility where protection against spills and accidental discharges had been provided. These included containment structures around storage tanks, covered areas for raw materials storage, and concrete

pads and berms designed to prevent spills to the soil. In addition, the JSC technical manager indicated that a new materials storage hanger had recently been constructed, and that three larger hangers would soon be built. These buildings will reportedly be used to house raw materials, intermediates, products, and wastes, and will help to prevent contamination of soils and stormwater runoff.

While certain PP/WM measures were in place at the JSC facility, the audit team noted several areas where storage, handling, loading, unloading, or waste disposal practices provided opportunities for spills, leaks, and contamination of soil and groundwater. Materials observed in these areas included raw materials, intermediates, final products and solid and liquid wastes.

Waste Collection Basin

The centralized waste collection basin provided no treatment to the wastes collected. The JSC technical manager reported that there had been no discharge from the basin during its 4 years of operation. In addition, the manager also reported that neither liquid nor solid waste has been removed from the basin by waste hauler. The technical manager indicated that evaporation accounted for significant losses from the basin; however, an actual flow balance had not been performed around the collection basin to determine the fate of the various wastestreams. Without such a flow balance, it was unclear whether any of the wastewater in the basin had seeped into the surrounding soils.

Results of the analyses performed following the audit indicated that the basin contains high concentrations of oxygen demanding organic pollutants, suspended and dissolved solids, nitrogen, surfactants, and some toluene. These pollutants and concentrations were consistent with the types of wastes known to be discharged to the basin. The oxygen demanding pollutants also appeared to be generally biodegradable due to the relatively low COD/BOD ratio (approximately 2).

While toluene was determined to be present in the basin, its concentration at the time of sampling was not particularly high. However, its presence indicated that some amount of toluene was entering the wastestream and collecting in the basin. It is also possible that other toxic organic pollutants may be present due to the breakdown of toluene or other organic material in the basin.

Air Emissions and Solid Wastes

While the focus of the PP/WM and water conservation audit was related to water use and wastewater generation, the solid wastes generated, and the pollutants discharged to the atmosphere were also examined.

Air Emissions

The principal atmospheric discharge generated at the JSC facility, was the SO_2 wastestream from the sulfonation plant. In addition to the SO_2 emission, the burners for facility's boiler operation, sodium silicate kiln, and multi-purpose dryer, also generated an air emission. The JSC facility also reported that it had burned waste sulfur to reduce its quantity of solid waste. This open burning of sulfur resulted in emissions of SO_2.

Silica and sodium carbonate dust was generated during the measuring and blending process, and sodium silicate dust was generated following the melting process from handling and storage of rock sodium silicate. Dust control was provided by a water spray in mixing of raw materials, and workers were reportedly provided with filters.

Although the STS plant was not in operation during the audit, it was reported that toluene fumes were occasionally present in this area.

Solid and Drummed Wastes

The JSC facility operations resulted in the generation of significant quantities of solid and drummed waste. The JSC staff indicated that approximately 645 drums had accumulated at the facility at the time of the audit. In addition, the facility reported that an additional 10 tons of solid sulfur waste, and 10 tons of solid sodium sulfate waste were also stored on site.

Recommendations

During the audit conducted at the JSC facility, JSC staff and management were extremely helpful in providing access to facility operations and in providing requested information. The staff and management of the JSC facility also expressed a sincere concern regarding current wastewater generation and water consumption practices at their facility. Based on the process evaluation and the assessment of PP/WM and water conservation opportunities conducted during the audit, the audit team identified the following recommendations, grouped into three categories:

- Process Operations;
- Materials Handling and Storage; and
- Other Waste Generating Activities.

Process Operations

Water Conservation and PP/WM opportunities recommended in this section relate to practices directly attributable to a specific plant operation. The following recommendations are provided:

1. Sulfonation/Sulfation

   - Sulfonator Optimization - The JSC facility should evaluate and optimize, if possible, the operation of the sulfonation film reactor to eliminate or minimize the generation of unreacted or charred materials.
   - Reduction in Use of Branched Alkylbenzene - The JSC facility should evaluate the economic aspects of reducing or eliminating the use of branched alkylbenzene.
   - Utilization of Sealless Pump - The JSC facility should investigate the possibility of using a sealless pump for transporting molten sulfur. This would prevent contamination of cooling water.
   - Leak Control - The JSC facility should provide additional maintenance to minimize leaks within this plant.

- Spill Prevention - The JSC facility should develop measures and provide training to staff in order to reduce the potential for spills within the plant.
- Sulfur Quality Control - The JSC facility should investigate the cost/benefit of obtaining a cleaner sulfur supply to reduce the volume of solid sulfur waste generated by the sulfur filters.
- Catalytic Converter Optimization - The JSC facility should evaluate the operation of the catalytic converter to optimize operation and reduce SO_2 emissions.
- Leak Prevention - JSC should provide additional maintenance to prevent or repair leaks as soon as possible.
- Elimination or Minimization of Contact Cooling for Sulfur Pumps - Contact cooling water for sulfur pumps should be replaced by a non-contact cooling water system or by sealless pumps.
- Minimization of Scrubber Water - The JSC facility should maximize the air to water ratio in the scrubber unit in order to minimize water use necessary for this unit to operate effectively.

2. Saponification

- Reactor Optimization - The saponification reaction temperature should be optimized to avoid line blockages and unnecessary product wasting during cleaning (unblocking) operations.
- Leak Control - The equipment in the saponification plant should be maintained more rigorously to reduce steam leaks. This will reduce discharge of contaminated condensate, and reduce the need for boiler make-up water.
- Production Schedule Optimization - The production schedule should be modified and optimized to prevent frequent changes of products and reduce start-up losses.

3. Sodium Silicate Production

- Elimination or Minimization of Contact Cooling - The JSC facility should investigate the opportunity for using non-contact cooling water, or minimizing cooling water use, for the casting belt. This would eliminate the discharge of contaminated cooling water, and reduce the need for make-up water.
- Sediment/Filter Solids Control - The JSC facility should investigate possible ways to minimize sediment in the dissolved sodium silicate storage tanks. Methods to reduce sediment generation could include:

  - Increase the purity of its raw materials;
  - Optimize the operation of the kiln; and
  - Optimize the dissolving conditions in the autoclave.

- Dust Control - The JSC facility should implement additional dust control measures to reduce opportunities for worker exposure to silica dust.
- Maximization of Cooling Water Reuse - The JSC facility should maximize its use of the casting belt cooling water for dissolution of rock sodium silicate.

4. Sodium Toluene Sulfonate Production

- Elimination of Toluene Discharge - Water remaining following separation of toluene from the toluene/water mixture, should be stored and fully reused in the process in lieu of discharge to the collection basin. Storage and reuse efforts may require construction of an additional storage tank in the STS facility. Alternatively, the water contaminated with toluene could be treated by activated carbon, air stripping, or other means, and reused, or in some way segregated from other plant discharges.
- STS Cooling Water Segregation - The use of the central cooling water system for the STS plant could be eliminated by constructing an STS specific cooling system. Additionally, a toluene leak detection system could be installed to minimize the loss of toluene to the cooling circuit. This practice would eliminate the discharge of contaminated cooling water to the basin, and would reduce the need for cooling system make-up water.
- Leak Control - The equipment in the STS plant should be maintained more rigorously to reduce or eliminate possibilities for the cooling water and steam to become contaminated by toluene due to leaks.
- Dryer Condensate Reuse - The JSC facility could investigate possible in-plant uses, such as equipment or floor cleaning, for the condensed vapors from the STS drying unit.

5. Alkanolamides Production

- Elimination of Pasty Waste Discharge - The JSC facility should ensure that all of the pasty wastes generated at the plant are drummed, and not discharged to basin.

Materials Handling and Storage

During the audit site visit, the audit team noted a variety of materials handling and storage practices at the JSC facility that could result in the discharge of pollutants to the wadi during a storm event. The following PP/WM and water conservation opportunities were identified by the audit team to address these findings.

1. Concrete loading and unloading areas should be constructed utilizing containment berms and rain covers to isolate spills, prevent soil contamination, and eliminate stormwater runoff.
2. Drummed and bagged raw materials, intermediates, products and wastes should be stored in covered areas with concrete floors and spill containment berms.
3. The drainage hole cut in the wall of the sulfur melting room should be sealed.
4. Leaks and spills throughout the JSC facility should be removed by absorbent materials or other dry cleaning methods and not rinsed to the collection basin. In addition, where barrels are used to collect overflow from process units, these collection vessels should be replaced more frequently to ensure they do not overflow to the collection basin.
5. Containment structures constructed to prevent spills from reaching bare ground or the wadi should be repaired and maintained to ensure their proper operation. Where drains are located in these containment structures, they should be closed under normal circumstances, and opened only to remove uncontaminated stormwater or washwater.
6. Tanker truck and barrel washing should be performed off site at a suitable location, or within an area of the JSC facility designed to contain truck and barrel washing discharges.

8

3. Waste Collection Basin

- Optimize Operation of the Collection Basin - The JSC facility should carefully study the operation of the waste collection basin to ensure that wastewater does not leak or drain from the basin to the ground or to the wadi.
- Prevent Seepage from the Collection Basin - The JSC facility should evaluate the possible migration of wastewater from the basin to the soil and groundwater. To perform the evaluation, monitoring wells could be constructed near the basin to determine if leakage has occurred, and if so, the extent of the migration.

Follow-up Actions

To ensure the success of a PP/WM or water conservation project, a facility implementing specific actions must follow-up on these actions to ensure that the goals of the project are achieved. It is imperative, therefore, that the JSC facility follow-up implementation of any of the recommendations of this report with activities such as increased monitoring of water use and disposal, ongoing maintenance and upkeep of new equipment, and conduct of periodic training and instruction for management and production line staff.

Increased monitoring of water use and disposal is particularly important for the JSC facility due to the current lack of data in these areas. Specifically, the JSC facility should begin routine monitoring of key water usage activities and wastewater discharge streams, including the wastewater collection basin. This will assist the facility in more accurately targeting areas of concern, and will provide baseline data for overall plant performance. In addition, prior to initiating specific PP/WM activities, JSC should evaluate the baseline characteristics of the wastestream (or water consumption activity) to be corrected. This baseline data can then be used to measure the initial success of the PP/WM or water conservation technique, and can also be used to ensure that the technique continues to perform successfully over time.

With respect to the PP/WM and water conservation techniques recommended in Section 7.0, the JSC facility should follow-up on all of the elements that it determines are productive. Implementation of these recommendations will reduce water consumption, pollutant loadings, and may result in the recovery of additional by-products. In particular, the JSC facility should follow-up on the following recommendations:

PP/WM Recommendations

1. Materials Handling and Storage - During the audit site visit, the audit team noted a variety of materials handling and storage practices at the JSC facility that could result in the discharge of pollutants to the wadi during a storm event, or which could contaminate surrounding soils. The JSC facility indicated that several large hangers would soon be constructed and used for materials storage. The JSC facility should review all current practices for materials handling and storage in order to minimize impact to the wadi.

2. Operation of the Waste Collection Basin - The waste collection basin operated by JSC should be fully evaluated to assess influent and effluent flows. In particular, monitoring of influent flow should be evaluated fully in order to perform a proper flow balance. Possible leakage from the basin should also be evaluated by the installation of one or more sampling wells.

Control of Other Waste Generating Activities

1. Solid and Drummed Wastes

- Utilization of Sulfur Wastes - The JSC facility should promote the use by outside firms of the solid sulfur waste generated by the sulfonation process.
- Utilization of Charred Material - The JSC facility should investigate the re-introduction of additional charred material, generated in the sulfonation reactor and removed by the cyclone, to the final product.
- Utilization of Sodium Silicate Sediment - The JSC facility should investigate alternative uses for the sediment collected in the dissolved sodium silicate storage tanks, and for the solids removed from the plate filters used to remove impurities during transfer from the storage tanks to the final product tank.
- Utilization of Sodium Sulfate Wastes - The JSC facility should investigate the use by other companies of the waste sodium sulfate generated by the STS process. Additionally, the process should be optimized to reduce the generation of this material to the extent possible.

2. Utilities Wastes

- Utilization of RO Reject - RO reject and membrane filter water should be removed from use in irrigation of adjacent farm land. The reject water should instead be evaporated, or treated, to prevent TDS contamination of soil.
- Utilization of Recovered Fuel Oil - The JSC facility should revise boiler maintenance procedures to prevent the discharge of waste fuel oil to the waste collection basin. Alternatively, an oil water separator should be installed prior to the waste collection basin to prevent waste fuel oil from contaminating the basin.
- Leak and Spill Prevention - Leaks and spills throughout the JSC facility should be minimized to reduce contamination of the centralized cooling and steam systems.
- Domestic Waste Treatment - The JSC facility should construct an engineered septic tank with a suitable leach field to treat the domestic wastes generated by the facility.
- Pre-treatment of Cooling Water - The JSC facility should use RO water or softened water for cooling water make-up. Use of treated water would decrease blowdown frequency and reduce the need for make-up water.
- Reduction of Steam Losses - The JSC facility should provide additional maintenance to prevent steam leaks. Steam losses account for a substantial portion of total water consumption at the JSC facility.
- Maximization of Heat Recovery - All means should be investigated for heat recovery prior to release of any waste gases/steam to the atmosphere. This may result in conservation of energy and reduce water consumption through the need for less make-up water for steam generation.
- Replace Wet Cleaning with Dry Cleaning Methods - The JSC facility should use absorbent materials and brooms for cleaning wherever possible. In addition, low pressure hoses should by replaced by a high pressure system.
- Truck Cleaning - The JSC facility should provide additional draining of product prior to washing tankers, and use a high pressure washing system to reduce water use.

1.0

INTRODUCTION

1.0 INTRODUCTION

This report presents the findings of an audit conducted to evaluate the Pollution Prevention Waste Minimization (PP/WM) and water conservation opportunities for the Jordan Sulpho-Chemicals Company (JSC) facility located near Zarqa, Jordan. Additionally, this report provides documentation of the on-site evaluation of the facility's current operations, discusses water use and disposal practices, and provides recommendations for PP/WM opportunities. Additional information including industry background, audit procedures, and an overview of the facility's operations, are provided to support the audit findings and recommendations.

1.1 BACKGROUND

Under Contract No. 278-0288-00-4026-00 with the United States Agency for International Development (USAID), Development Alternatives, Inc. (DAI) is performing an Industrial Wastewater Discharge Prevention (IWDP) Program in Amman, Jordan. The IWDP Program is one of the four components of the Water Quality Improvement and Conservation (WQIC) project funded by USAID. The Program is being performed by DAI with full coordination between the Jordanian Ministry of Water and Irrigation (MWI) and the Amman Chamber of Industry (Chamber).

The IWDP will be performed in three phases. The first phase requires completion of ten PP/WM audits by DAI and its sub-contractors. The second phase requires completion of Feasibility Studies (FS) for four of the audited facilities. Finally, demonstration projects will be completed for two selected FS facilities.

Harza Consulting Engineers and Scientists (Harza), Chicago, Illinois, USA, and Science Applications International Corporation (SAIC), Falls Church, Virginia, USA, have been retained as the subcontractors to lead the audits. The Royal Scientific Society (RSS) of Jordan, was selected as the local consultant to assist the lead consultants in the audit site visits and report development. The PP/WM audit for the JSC facility was conducted by the SAIC/RSS team.

Due to the scarcity of water in the Zarqa Basin, as well as the need to minimize the release of pollutants into waters of the basin, it is in the best interest of industries to conserve water and implement effective PP/WM practices. Companies practicing PP/WM and water conservation programs will more efficiently utilize scarce resources and minimize their impact on these resources. The hierarchy of PP/WM and water conservation practices includes:

1. Reduce waste generation

   - Substitution of less polluting raw materials in product manufacture;
   - Alteration of products manufactured to eliminate need for use of polluting materials;
   - Replacement or upgrading of outdated or inefficient process equipment; and
   - Development of employee training programs to ensure employees can efficiently manage raw materials and resources.

13

2. Reuse waste materials prior to disposal

   - Reuse of uncontaminated raw materials and resources (including water);
   - Reprocessing of previously discarded materials (e.g., off-spec materials, used materials); and
   - On site recovery of reusable materials (e.g., used solvents, waste heat, scrap).

3. Recycle waste materials.

4. Treat wastes and dispose of residues.

The PP/WM audits performed during this program will identify and evaluate available PP/WM and water conservation opportunities and will provide site specific recommendations to assist the study industry in developing a comprehensive water conservation and PP/WM strategy.

1.2 OBJECTIVES

The facility PP/WM audits are designed to assess the potential techniques for PP/WM and water conservation at the study facilities. The goal of each audit is to evaluate and identify all possible PP/WM, wastewater clean-up, and water conservation techniques that are appropriate for the study facility.

The specific objectives of this audit are as follows:

1. Review general industry background data and identify "state-of-the-art" wastewater management and processing practices.

2. Work on-site with industry representatives, MWI and the Chamber officials, and other interested parties, to review current processing procedures and identify possible options for PP/WM and water conservation.

3. Prepare a report that evaluates possible PP/WM and water conservation alternatives and provides recommendations to the industry.

In order to complete the first objective, a comprehensive literature review was performed. This review included searches of the U.S. EPA Pollution Prevention Information Clearinghouse (PPIC) repository (and its corresponding database PIES), on-line library catalog databases, pollution PP/WM bibliographical references, and personal contacts with pollution prevention specialists. The review resulted in the identification of numerous references with a range of very general to very specific PP/WM techniques. Source documents were assessed to determine their applicability to this project and categorized appropriately. The findings of the background document are included in Appendix F.

Following completion of the literature review, the audit team performed the on-site audit of the JSC facility. The audit was performed with close consultation of industry representatives to ensure that they were aware of and supported proposed actions. Audit activities included the careful gathering of baseline water use and waste generation data, identification and assessment of potential PP/WM and water conservation options, and solicitation of ideas and proposals from management and production line staff.

14

1.3 REPORT CONTENTS

This report provides the findings of the audit conducted at the JSC facility on September 20, 1994, and the results of the subsequent discharge monitoring conducted by the audit team on September 25, 1994. The report provides recommendations for the development of a site-specific program that meets the specific needs and goals of the JSC facility. Audit recommendations include both PP/WM techniques (e.g., water conservation techniques, housekeeping practices, alternate waste disposal practices, etc.) and suggestions for PP/WM training for facility staff and follow-up studies to assess program successes.

The report is organized into eight sections that provide an overview of the sulfur chemicals industry, as it applies to the JSC operation, (Section 2), a description of the audit procedures and documentation (Section 3), a description of the water use practices at the facility (Section 4), a description of the waste generation activities at the facility (Section 5), a discussion of possible PP/WM opportunities (Section 6), the audit conclusions and recommendations (Section 7), and the suggested follow-up actions (Section 8).

Several appendices are also included in the report to provide supporting documentation and reference materials. The appendices include a copy of the audit questionnaire (Appendix A), information provided by the JSC facility (Appendix B), an overview of regulations applicable to the discharge from JSC (Appendix C), site visit photographs (Appendix D), references used to prepare the audit report (Appendix E), and the text portion of the PP/WM Background Report (Appendix F).

2.0

PROCESS OVERVIEW

2.0 PROCESS OVERVIEW

The sulfur chemicals industry produces a wide variety of organic and inorganic chemicals containing sulfur and sulfur compounds. The JSC facility produces sulfur- and non-sulfur-based chemicals used in soap and detergent manufacture. This section provides an overview of the typical industry practices for this industrial sector and a description of the specific processes used at the JSC facility.

2.1 TYPICAL INDUSTRY PRACTICES

The particular processes applicable to the sulfur chemicals industry in Jordan include: sulfonation and sulfation, saponification (soap making), sodium silicate production, sodium toluene sulfonate (STS) production and alkanolamides production. A description of each of these processes is provided in the following sections.

2.1.1 Sulfonation/Sulfation

The group of chemicals referred to as sulfonic acids include acids that are derived from sulfuric acid by replacement of a hydroxyl group by either an inorganic anion or a univalent organic radical. Sulfonic acids are, therefore, characterized by the chemical formula: $-SO_2OH$ or $-SO_3H$. Where the substitution involves an inorganic ion (e.g., chlorine or fluorine) the general formula is represented by $X-SO_2OH$. Where the substitution involves an organic radical, the general formula is represented by $R-SO_2OH$. The properties of sulfonic acids are affected significantly by the characteristics of the "R" group. The majority of sulfonic acids, however, are characterized as strong acids and are generally hygroscopic, nonvolatile, soluble in water, and chemically stable.

Sulfonates (salts of sulfonic acids) linked to alkyl, aryl, or alkylaryl hydrophobes are effective in detergent manufacturing. Sulfonic acids are relatively strong acids and their associated salts are not generally affected by pH. The alkylbenzene sulfonate (ABS) group is an effective surfactant and is widely used in soap and detergent manufacturing.

Sulfonates are produced by reactions of sulfuric acid and the inorganic or organic functional group under prescribed conditions. The ABS group are generally produced by the reaction of sulfuric acid and linear (or branched) alkyl-benzene. In this process the by-product of the reaction is water (Kirk-Othmer 1983).

2.1.2 Saponification

Soaps are the salts of long chain fatty acids. Sodium and potassium are commonly used as the cation in these salts. The surface activity of soaps is the result of the hydrophilic functional group at one end of the long chain molecule combined with the hydrophobic group at the other. In solution, these molecules aggregate as micelles which result in the emulsifying and dispersing characteristics of soaps.

17

The common raw materials used in soap production are naturally occurring fatty acids and inorganic alkalies. Fatty acid feedstocks may include the following:

- **Tallow** - Animal fat rendered from the body fat of cattle and sheep;
- **Coconut Oil** - Extracted from crushed fruit of the coconut palm;
- **Palm Oil** - Extracted from the crushed fruit of the tropical palm tree; and
- **Palm Kernel Oil** - Extracted from the nut of the tropical palm tree.

Common alkali used in the manufacturing process include sodium hydroxide (NaOH) and potassium hydroxide (KOH). These chemicals can be used alone or in combination to yield specific characteristics in the final soap product.

The manufacturing processes used in soap production vary depending on the raw materials and final products being generated. In general, however, the process includes three basic steps: saponification, washing, and fitting. Saponification involves the mixing and reaction of the fatty acids and alkali feedstocks in a heated environment. In most processes the alkali is added slowly during the reaction until the point where it is no longer consumed by the reaction. The unreacted waste alkali (lye) is then removed from the reaction vessel for washing and glycerol recovery. Washing involves the series of steps that result in the removal of lye from the soap product. Fitting is the process where additional impurities are removed, additives are incorporated and final processing is performed. These manufacturing processes can be accomplished in very simple open tanks or in large fully automated systems.

In the process described by Kirk-Othmer, fatty acids, obtained from natural oils by hydrolysis or by acidification, are readily neutralized with caustic alkali or carbonate to form soap. Glycerol recovery is eliminated and, since fatty acids are usually distilled before use, nigre separation may also be avoided. Thus, where high purity raw materials are used, the process generates essentially no by-products (Kirk-Othmer 1983).

2.1.3 Sodium Silicate Production

Silicates, both naturally occurring and commercially manufactured, are salts composed of silicon dioxide and an alkali metal. The alkali metal is usually sodium or potassium. Chemically, sodium silicates are the salts of a strong base and a weak acid. In solution, these salts form highly alkaline solutions and are useful in the manufacture of soaps and detergents.

Sodium silicates are widely used as soap builders in soap and detergent manufacturing. In the soap and detergent formulation, sodium silicates act as alkalies and aid in the saponification of oils and fats due to their alkaline nature and buffering capacity. Silicates are also effective in controlling the corrosive action of detergents on metallic washing machine parts and are effective in the sequestering of magnesium hardness ions in solution. Commercially available silicates are characterized by the ratio of SiO_2 to Na_2O in the silicate molecule. In detergent formulae, the ratio is typically 2.4:1.

Sodium silicate is produced commercially through the reaction of quartz sand (silica) and sodium carbonate (soda ash) at a high temperature. To ensure a high quality glass, the sand and soda ash should be of high purity. The resultant molten sodium silicate is extremely caustic and can damage equipment if not handled properly. The molten glass is formed into lumps for subsequent dissolving or can be drawn directly into a dissolving unit.

2.1.4 Sodium Toluene Sulfonate (STS) Production

STS is a sodium salt of toluene sulfonic acid. The general reaction chemistry for sulfonic acids and sulfonates is provided in Section 2.1.1, above.

STS is produced by the reaction of toluene and sulfuric acid to produce toluene sulfonic acid and water, followed by a neutralization reaction with NaOH to produce STS. It is generally produced as a white pasty substance and formed into bars or pellets. STS is used widely in the production of detergents, paints and other applications.

2.1.5 Alkanolamides Production

Fatty acid amides are generally produced by the reaction of a fatty acid with ammonia or an amine and have the chemical formula: $R\text{-}CONH_2$, where R may be a saturated or unsaturated alkyl chain derived from a fatty acid. Fatty acid amides are generally insoluble in water.

Fatty acid amides are produced most commonly by the reaction of a fatty acid with anhydrous ammonia. These materials are combined and heated under slightly increased pressure for approximately 10 to 12 hours. During the reaction, ammonia and water are constantly vented to ensure completion of the reaction. Various materials can be used to catalyze the reaction including boric acid, and titanium and zinc alkoxides.

Alkanolamide fatty acids are also of considerable commercial interest in the production of detergents. Coconut fatty acids or esters and amino alcohols, most commonly, diethanolamine, are used to produce these products. Where the fatty acid is used, the by-product of the reaction is water. Where the methylester is used, the reaction by-product is methanol.

2.2 PROCESS OPERATIONS AT THE JORDAN SULPHO-CHEMICALS COMPANY FACILITY

The JSC facility produces a variety of chemical products used to manufacture soaps, detergents and cleaning products. Most of the chemicals produced are sulfur-based; however, the facility also produces sodium silicate and fatty acid amides which do not contain sulfur. Table 1 provides a list of the products manufactured at the JSC facility, the production area where the product is manufactured, and, where available, the production capacity.

This section focuses on the flow of raw materials and the generation of intermediates and final products at the JSC facility. Where water is used as a raw material, is generated in the process, or is an integral part of the manufacturing process, the description includes a brief description of water use and disposal practices. Other water uses, such as cooling water, steam generation, and cleaning waters, and the disposal practices for wastestreams generated at the facility, are discussed in detail in Section 4.0.

2.2.1 Sulfonation/Sulfation

The sulfonation/sulfation plant at the JSC facility was developed by the Ballestra Company of Italy. This plant operates on continuous basis utilizing a film reactor and gaseous sulfur trioxide (SO_3). The JSC facility uses this process to produce branched and linear sulfonic acids, and sodium lauryl

19

ether sulfate. A process flow diagram of the sulfonation process, including raw materials used and water use and disposal, is provided in Figure 1.

The JSC sulfonation/sulfation plant utilizes the following unit operations:

Air Drying

The air drying unit operations are located in the sulfonation building. Atmospheric air is filtered, blown by a low pressure blower, and cooled to remove moisture. The cooled, partially dried air then flows to one of two silica gel towers, connected in parallel. The active tower provides additional moisture removal, while the inactive tower undergoes regeneration. Silica gel regeneration is accomplished by steam, with condensate returned to the boiler. After drying, the air flows to the sulfur combustion furnace.

Sulfur Burning

Elemental sulfur is stored in a small building adjacent to the sulfonation plant. The sulfur melting unit is also located in this building. Elemental sulfur is melted in this building, filtered to remove impurities, and pumped to the molten sulfur storage tank in the sulfonation plant. From the storage tank, the molten sulfur is pumped to the combustion furnace.

SO_2 and SO_3 Production

The combustion furnace combines the molten sulfur and dry air to produce SO_2 gas. The SO_2 gas is cooled by an air heat exchanger to ensure that it reaches the catalytic converter unit at the required temperature. The catalytic converter uses vanadium pentoxide (V_2O_5) as the catalyst to convert the SO_2 to SO_3. The temperature within the catalytic converter is controlled by a series of air heat exchangers in order to maximize the conversion process. The SO_3 gas produced in the catalytic converter is filtered to remove impurities, and flows to the sulfonation reactor. No water is added to or generated from this process.

Sulfonation or Sulfation

The sulfonation unit consists of a tubular film reactor and a raw material storage and feed system. Raw materials and SO_3 gas are fed to the reactor in stoichiometric quantities for complete reaction. Non-contact cooling water is circulated outside the reaction tubes to control the reaction temperature. The resultant acid (linear or branched alkyl benzene sulfonic acid, or sodium lauryl ether sulfuric acid) passes through a liquid gas separator to collect the sulfonic acid product (or intermediate).

Aging and Hydrolysis

The aging and hydrolysis unit is used to stabilize certain sulfonated intermediates such as dodecylbenzene sulfonic acid. Water is added to the product during stabilization; however, no wastestream is generated. The sulfonated product overflows into the aging unit and is then conveyed to the stabilizer. From these units the aged and stabilized material is either transferred to the neutralization unit, or sold as a final product.

Exhaust Gas Treatment

The gas stripped from the liquid in the separator passes through a separating cyclone to remove liquid droplets entrained in the gaseous flow. The off-gas from the cyclone is then passed through an electrostatic precipitator (ESP) for additional aerosol removal. The liquid wastes generated by the cyclone and ESP units are collected in barrels and stored for reprocessing or disposal. Information provided by the plant supplier indicates that the cyclone and ESP wastes generated by the sulfonation of dodecylbenzene (DDB) raw material can normally be recovered, while those from the sulfation of alcohol and ethylated alcohol raw materials are not normally recovered.

Following the ESP unit, the off-gas passes through a scrubber system which uses a spray of water and caustic soda. The wastestream is generated by the scrubber, and is discharged to the waste collection basin. A diagram of the gas treatment unit is provided in Figure 2.

Neutralization

Where the end product is to be a sulfonate or sulfate, the acid produced in the sulfonation/sulfation reactor is pumped to the two-step film neutralization unit. In the first stage of the reactor, the acid is combined with an excess of NaOH and dilution water. The contents of the vessel are continuously recirculated and allowed to react. When the vessel is full, it overflows into a second reactor and final homogenizer. Additional sulfonic acid is added to the second vessel to neutralize the excess NaOH and complete the reaction. The neutralization reaction is exothermic and temperature is controlled by water cooled tube plate heat exchanger. The resultant sulfonates or sulfates are either sold as a solution, containing 70 percent product, or are sent to the drying unit for final processing. The multi-purpose drying unit is described in the saponification section.

2.2.2 Saponification

The saponification plant at the JSC facility is designed to produce soap paste from fatty acids, and utilizes a multipurpose drying unit for the production of soap chips. The fatty acid saponification unit is designed to produce neat soap at 72 - 74 percent concentration, suitable for feeding directly to the drying unit. The drying unit is designed to dry part of the neat soap paste produced in the saponification unit and produce soap chips with a maximum water content of 10 percent. The drying unit is also used to produce flakes from other surfactants produced at the JSC facility including linear ABS and sodium lauryl sulfate (future product). A process flow diagram of the saponification operation, including raw materials used and water use and disposal, is provided in Figure 3.

In the saponification process, the raw materials (fatty acids, caustic soda, salt solution, and additives) are added proportionally to the reactor. Process water is fed to the reactor based on the desired characteristics of the soap. The ingredients are mixed in the reactor and the reaction is carried out to completion. Excess caustic soda is controlled by addition of fatty acid to attain the desired level of free alkalinity. Neat soap is sent to a storage vessel prior to drying or packaging.

The drying unit is based on a film evaporator and is operated under reduced pressure. The material to be dried is fed to the top of the unit, and the dried product is emitted from the bottom. The dried product is cooled and discharged as flakes or chips by an ethylene glycol chilled roller mill.

21

2.2.3 Sodium Silicate Production

The JSC facility produces sodium silicate by reacting sand and soda ash (sodium carbonate) in a rotary kiln. The sodium silicate produced may be sold in the rock form, or may be dissolved for sale as a sodium silicate solution. A process flow diagram of the sodium silicate melting operation is provided in Figure 4, and a diagram of the dissolution plant is provided in Figure 5.

The sand and soda ash are fed from storage silos to weighing units where the correct proportions are determined. The materials are then discharged to a blender for mixing. A water spray is used for dust control during blending. From the mixer, the raw materials enter the rotary kiln where the temperature is raised to approximately 1,500 degrees Celsius (°C). The raw materials then react in the kiln to produce molten sodium silicate with CO_2 as a by-product. Any moisture from the dust control spray or contained in the raw materials is evaporated in this process. The molten sodium silicate is then discharged to a steel casting belt cooled from below with contact cooling water. At the end of the casting belt, the rock sodium silicate is shoveled to the storage area.

While some of the sodium silicate rock is sold in the solid form, approximately 40 percent is dissolved in the dissolution unit and sold as a solution. The process involves, addition of the rock sodium silicate, water, and steam to a rotary autoclave under 6 bars pressure. The sodium silicate dissolves in the autoclave and is transferred to three storage tanks. During storage, impurities in the dissolved sodium silicate settle out and collect in the bottom of these tanks and must be removed periodically for recovery or disposal. The liquid sodium silicate product is then discharged from the storage tanks and filtered via a plate filter. The filtered product then flows to a final storage tank for distribution to consumers.

2.2.4 Sodium Toluene Sulfonate Production

Sodium Toluene Sulfonate (STS) is produced by the JSC facility in the building referred to as the "alkanolamides" plant. Production is performed on a batch basis by first reacting toluene and sulfuric acid in the reaction vessel, followed by neutralization with NaOH, and finally drying and packaging. A process flow diagram of the STS operation, including raw materials used and water use and disposal, is provided in Figure 6. The process sequence is as follows:

Toluene is added to the reaction vessel in stoichiometric excess in order to produce the desired yield. Concentrated sulfuric acid is then slowly added to the vessel to initiate the reaction. As the exothermic reaction proceeds, water is added to vessel and the generated heat causes the toluene and water to boil. The toluene/water vapors are extracted from the reactor and are condensed and collected in a separate vessel. The toluene and water separate in the vessel and the toluene is recovered for subsequent reaction. The water remaining in the vessel is generally discarded to the collection basin. The sulfonation reaction continues for several hours.

When the required sulfonation has occurred, caustic soda is added to the reaction vessel in stoichiometric quantity to produce sulfonate. This reaction is also exothermic and again raises the temperature of the material to above the boiling point for toluene. All excess toluene, therefore, is removed from the product in this step. After proper aging has occurred, the product is cooled and fed either to the dryer or to storage.

The drying of STS is performed in a spray tower. The aqueous product is pumped under high pressure to nozzles in the spray tower. Steam is fed into the tower to remove moisture from the liquid STS. The dried product leaves the tower through the bottom and is collected in storage silos. The product then flows from the silos and is packaged for distribution. The liquid condensed from the dryer vapors contains significant quantities of product, and is discharged to the collection basin.

2.2.5 Alkanolamides Production

The JSC facility produces coco diethanolamide and coco monoethanolamide through the reaction of coconut fatty acids with mono- or di- ethanolamine in batch reactors. A process flow diagram of the alkanolamides operation, including raw materials used and water use and disposal, is provided in Figure 7.

In this reaction, the fatty acid and the ethanolamine are pumped to the reaction vessel in stoichiometric proportions. The reactor temperature is raised to approximately 100°C and the pressure is reduced by vacuum pump to advance the reaction. During the reaction, water is evolved and is condensed and removed from the reactor.

Following the reaction, the product is either directly drummed (diethanolamide) or stored in an intermediate tank (monoethanolamide). The monoethanolamide is transferred from the intermediate tank to a belt cooler that is sprayed with cooling water from below. The product is then cooled, flaked and packaged for distribution.

The JSC facility also indicated that alkanolamides are sometimes produced using fatty acid methylesters. During this reaction, methanol is generated as a by-product. The methanol is collected and sold as a useful product.

3.0

AUDIT PROCESS

3.0 AUDIT PROCESS

The initial site visit to the JSC facility was conducted on September 20, 1994. This visit was conducted to evaluate process operations, identify PP/WM and water conservation opportunities, and solicit input from facility staff. The audit was coordinated through the MWI and the Chamber. This section describes the preparation and conduct of the audit.

3.1 AUDIT COORDINATION

The Chamber informed the JSC facility about the intent and schedule of the audit prior to the site visit. An audit questionnaire, specifically developed for this PP/WM project (Appendix A), was included with the request, and JSC staff were asked to complete the questionnaire prior to the audit. The JSC facility was also requested to furnish an overall flow balance, process flow diagram, and facility layout. This information, where available, was furnished to the audit team during the site visit.

3.2 PP/WM BACKGROUND MATERIALS

In order to review general industry background data and identify " state-of-the-art " processing and waste management practices pertinent to PP/WM, a comprehensive literature review was performed by the Lead American Consultant prior to his visit to Jordan. The review included searches of the U.S. EPA Pollution Prevention Information Clearinghouse (PPIC) repository, on-line library catalogue databases, review of PP/WM bibliographical references, and personal contacts with pollution prevention specialists. A copy of the text of background report is provided in Appendix F.

3.3 PRE-INSPECTION MEETING

The JSC facility audit, including the pre-inspection meeting, was conducted on September 20, 1994. The initial audit team consisted of the following personnel:

Dr. Usama Mudallal	Amman Chamber of Industry
Ms. Rania Abdul Khaleq	Ministry of Water & Irrigation
Mr. Mohamad Lafi	Water Authority of Jordan
Dr. Shawn Niaki	Program Director, DAI (Harza)
Mr. David Hair	Lead American Consultant (SAIC)
Dr. Riyad Musa	Local Consultant (RSS)
Mr. Rafat Assi	Local Consultant (RSS)

The representatives for the JSC facility included:

Dr. Marwan Muasher	General Manager
Mr. Sami Dabas	Administrative Manager
Mr. Hatem Abbas	Technical Manager
Mr. Said Abdullah	Process Engineer

The pre-inspection meeting was held at the JSC facility on September 20, 1994. The intent of this meeting was to inform the JSC facility staff about the conduct and the objective of the audit, and to familiarize the audit team with JSC's process as it related to the fresh water utilization, wastewater generation, treatment and disposal, water recycle and reuse and the overall water management at the facility. The audit team explained to the JSC facility staff the purpose of the audit, and facility staff furnished the audit team with the following:

- Facility process diagrams;
- Facility process descriptions;
- Analyses of groundwater quality;
- Cooling and boiler water additives; and
- Miscellaneous facility documents.

Copies of these materials are included in the Appendix B of this report.

3.4 AUDIT

The facility audit was conducted on September 20, 1994. The JSC facility designated the facility's technical manager to accompany the audit team. The JSC representative and the audit team members toured and inspected the facility starting at the sulfonation plant. and continued through the entire JSC operation. Although several sections of the plant were not operating during the site visit, the JSC representative and the audit team toured and discussed all plant operations.

Upon completion of the facility tour, the audit team and facility representatives continued discussions regarding overall water usage and wastewater management practices currently employed. The Audit team requested that the technical manager provide additional water use and disposal data, and he kindly agreed to provide estimates.

Mr. David Hair and Mr. Rafat Assi visited the facility again on September 25, 1994, to collect additional follow-up information. During this visit, several unanswered questions were resolved and samples from the wastewater collection basin were obtained. Grab samples of the collection basin supernatant were collected for BOD, COD, ABS, TSS, TDS, TKN, SO_4, toluene and an organics scan. Two grab samples of the basin sludge were also collected to determine if toluene or other toxic organic pollutants might be present. Samples were taken to the Water Authority of Jordan (WAJ) laboratory in Amman for analysis. The results of these analyses are discussed in Section 4.0.

Two additional follow-up visits were performed by Mr. Rafat Assi, on September 29, and October 8, 1994, in order to complete the facility water balance and to resolve additional questions. The facility technical manager provided the requested information.

3.5 POST-INSPECTION MEETING

Following the data gathering effort, the audit team met with the JSC representatives to discuss data gaps and the team's preliminary impressions regarding PP/WM and water conservation opportunities. The facility staff were responsive to the team's suggestions and agreed to help with any additional data gathering requests.

4.0

AUDIT FINDINGS

4.0 AUDIT FINDINGS

The principal focus of the audit site visit was to evaluate the water use and waste disposal practices at the JSC facility and to identify opportunities for PP/WM and water conservation. The findings of the audit team regarding water use and waste disposal are provided in this section.

4.1 WATER USE AND BALANCE

During the initial site visit to the JSC facility, and during follow-up visits, the JSC staff provided data describing total water use at the facility. The JSC facility monitors total water use from purchase records and groundwater well operation logs. However, monitoring of water use for individual process operations was not performed.

In order to develop a comprehensive water balance, the technical manager and audit staff used process diagrams to calculate and estimate specific water uses. These estimates were generally based on plant capacity. A water balance diagram, summarizing water use and discharge information obtained during the audit, is provided in Figure 8. Water uses at the facility included: process water (including cleaning and maintenance), cooling water, steam generation, domestic (sanitary) and irrigation. Potable water was provided by a separate water tanker, with consumption estimated as 2 m^3/day. Since potable water use is not related to the processes, its use was not evaluated in this report.

Based on information provided by the facility staff, the JSC facility's total water requirement was dependent on whether water was supplied by tanker or drawn from JSC's private well. Where water was received from tankers, the facility required approximately 90 m^3 per day of fresh water for all uses except potable water. However, water from the JSC groundwater well was very high in TDS and required treatment by a reverse osmosis (RO) unit prior to use. When the RO unit was in operation, the facility water use increased to approximately 110 m^3/day due to the RO reject and membrane washing streams. Table 4 presents a summary of the water consumption practices at the JSC facility based on the water source. The selection of the source was based primarily on cost. When tanker water could be obtained for a cost lower than the cost of operating the well and RO unit, tanker water was used.

When the RO unit was not in operation, tanker water used for process operations and boiler feed was treated by a water softener system to reduce scaling. However, regardless of the source (i.e., well or tanker), the facility did not pre-treat the make-up water for its closed-circuit cooling system. The technical manager indicated that while pre-treatment would reduce the need for cooling system blowdown, the RO and softener systems did not have the capacity to treat this stream.

The specific water uses for each of the major plant areas of the JSC operation are described below.

4.1.1 Sulfonation/Sulfation

Water use and discharge quantities are provided on the sulfonation process flow diagram in Figure 1. Excluding the central cooling and steam systems, the total water used in the sulfonation plant was approximately 9.7 m^3/day, or 11 percent of the total facility water consumption. Water was used in the sulfonation/sulfation plant for the following purposes:

- Raw Material Dissolution - Water was used to produce NaOH solution from flakes for use in neutralization and for the scrubber spray water. The dissolution was conducted at a central location.
- Scrubber Water - The operation of the off-gas scrubber unit required approximately 7 m^3/day of fresh water. This water was sprayed with the NaOH solution for control emission of SO_2.
- Product Stabilization - Water was used in product manufacture for stabilization. All water utilized in the stabilization process was contained in the product.
- Contact Cooling - Contact cooling water was used for the two molten sulfur pump.
- Cleaning - Water was used intermittently for cleaning and flushing of lines during product changeover, and for equipment cleaning and floor washing.

In addition to these process specific uses, the sulfonation plant also used non-contact cooling water and steam for temperature control. The cooling water used in this plant was from the facility-wide recirculated cooling system, and the steam was from the central boiler system. These systems are described in Section 4.1.6.

4.1.2 Saponification

Water use and discharge quantities are provided on the saponification process flow diagram in Figure 3. Excluding the central cooling and steam systems, the saponification plant used approximately 6.5 m^3/day of fresh water, or about 7 percent of the total facility consumption. Water was used in the saponification plant for the following purposes:

- Raw Material Dissolution - Water was used to produce chemical solutions of sodium chloride (NaCl), ethylene diamine tetracetic acid (EDTA), and NaOH from dry raw materials. Dissolution of the NaOH was performed at a central location, while NaCl and EDTA were dissolved at the saponification plant.
- Process - Water was added to the reaction vessel during the manufacturing process. All water used in this process was contained in the product.
- Cooling and Steam - While the saponification plant used the centralized cooling and steam systems (Section 4.1.6), leaks within this plant caused contamination of these streams. Due to the contamination, approximately 1 m^3/day of make-up water was required to replace the contaminated steam and cooling water that was wasted to the collection basin.
- Cleaning - Water was used extensively for cleaning and maintenance of the saponification process including the following operations:

  - Cleaning of the dryer for product changeover
  - Equipment cleaning
  - Floor wash

In addition to these process specific uses, the saponification plant also used non-contact cooling water and steam for temperature control. The cooling water used in this plant was from the facility-wide recirculated cooling system, and the steam was from the central boiler system. These systems are described in Section 4.1.6.

29

4.1.3 Sodium Silicate Production

Water use and discharge quantities are provided on the sodium silicate melting process flow diagram in Figure 4 and for the dissolution plant in Figure 5. The total water consumption for the sodium silicate plant (melting and dissolution) was estimated to be 20.8 m^3/day, or 23 percent of the total facility water consumption. Water was used in the sodium silicate plant for the following purposes:

- Dust Control - Water was sprayed for dust control during the blending of the silica sand and sodium carbonate raw materials. Water added here was subsequently lost through evaporation in the rotary kiln.
- Contact Cooling - Significant quantities of contact cooling water were used to cool the casting belt containing the molten sodium silicate. Approximately 40 percent of this water was lost due to evaporation. The remainder was collected and used for sodium silicate dissolution or discharged to the collection basin. The cooling system for the sodium silicates plant was not part of central cooling circuit. Make-up water for this cooling system was from the fresh water system.
- Product Dissolution - The sodium silicate dissolution process, conducted in an autoclave, used either water from the casting belt cooling system or fresh water, as the solute. Steam, supplied by the central boiler system, was also used in the autoclave.
- Filter Washing - Following dissolution, water was used to wash the plate filter used to filter the dissolved sodium silicate as it was transferred from the storage tanks to the final product tank.
- Cleaning - Water was also used in the silicate melting plant for general cleaning and maintenance activities.

4.1.4 Sodium Toluene Sulfonate Production

Water use and discharge quantities are provided on the STS manufacturing process flow diagram in Figure 6. Water consumption in the STS plant was estimated to be 1.7 m^3/day, or about 2 percent of the total facility consumption. Water was used in the STS plant for the following purposes:

- Raw Material Dissolution - Water was used to dissolve dry NaOH flakes. This was conducted at a central location.
- Process - Process water was added to the STS reactor to assist in removal of excess toluene during reaction of toluene and sulfuric acid.
- Cleaning - Water was also used periodically for routine cleaning and maintenance activities.

In addition to these process specific uses, the STS plant used non-contact cooling water and steam for temperature control. The cooling water used in this plant was from the facility-wide recirculated cooling system, and the steam was from the central boiler system. These systems are described in Section 4.1.6, below.

4.1.5 Alkanolamides Production

Water use and discharge quantities are provided on the alkanolamides manufacturing process flow diagram in Figure 7. In general, the processes used for manufacturing alkanolamides did not use water.

4.1.6 Cooling, Steam, and Other Water Uses

The JSC facility utilized a recirculated cooling system for process temperature control, and other various uses, for all plant operations except sodium silicate melting and dissolution. The pumps and equipment for the cooling system were centrally located within the facility and contained approximately 50 m^3 of water. The water in the system was continuously recirculated and cooled by one cooling tower. Make-up water was added as needed for losses due to blowdown, evaporation, and leakage, and was estimated at 6 m^3/day. A flow balance for the cooling water system is provided in the facility water balance in Figure 8.

The JSC facility also used a central boiler system to generate all of the steam used for process throughout the operation. The facility had 3 boilers available although only one was typically used. Condensate from the steam heating system was collected throughout plant operations and was recirculated to boiler. Make-up water was added to the boiler system to account for steam losses to leaks and evaporation. The JSC facility staff indicated that approximately 36 m^3/day of make-up water, or about 40 percent of the total water consumption at the JSC facility, was needed to maintain the steam system. A flow balance for the boiler water system is provided in Figure 8.

The JSC facility reported that water was also used for cleaning tanker trucks. The tankers cleaned at the facility were used primarily for transporting liquid products. When the tankers were used for the same product, cleaning was generally not needed; however, when a tanker switched products it was rinsed with approximately 2 m^3 of fresh water. The JSC staff indicated that approximately 120 trucks per year were washed at the facility, requiring a water consumption of approximately 0.8 m^3/day.

In addition to water use related to process operations, the JSC facility also used water for domestic uses, including the canteen, employee washrooms, and wash basins, and for limited irrigation for landscaping. These uses, estimated at 3 m^3/day for domestic and 2 m^3/day for irrigation, were considered minimal and did not significantly effect water consumption.

4.2 WASTEWATER DISCHARGES

All routine discharges of wastewater from the JSC facility, except those wastestreams specifically identified below, were collected and directed to the central wastewater collection basin. Discharges to the basin included all process wastestreams, cooling water system blowdown, boiler blowdown, cleaning and maintenance discharges, and leaks and spills within the plant processing areas. A discussion of the process discharges that reach the basin is provided in Section 4.2.1.

The only wastestreams <u>not</u> directed to the collection basin were domestic (sanitary flows) and RO reject and membrane filter washwater. The domestic (sanitary) wastestream was discharged to an unlined excavation, and the RO reject was discharged to a holding tank for irrigation use by a local farmer.

While all wastestreams flow to the collection basin during normal operations, the facility reported that in wet weather, all process and stormwater flows are directed directly to the wadi. Based on general drainage characteristics of the facility, many of the areas where solid and liquid wastes are stored would also drain directly to the wadi. Due to their potential impact on both surface and groundwater quality, a discussion of discharges related to materials handling and storage is provided in Section 4.2.2.

Additionally, a discussion of the operation of the JSC facility waste collection basin is provided in Section 4.2.3. The waste collection basin reportedly has no effluent discharge to the wadi or groundwater; however, its proper operation and maintenance are imperative for protecting local surface and groundwater resources.

4.2.1 Process Wastestreams

Sulfonation

The facility audit determined that the operation of the sulfonation plant generated several wastewater discharges. The following wastestreams were identified by the audit team:

- Contaminated Cooling Water and Condensate - In the sulfur melting room, adjacent to the sulfonation plant, cooling water from sulfur pumps, and condensate from the heating steam, were seen collecting on the floor. While no drains were located in this area, a small hole (approximately 5 cm) had been cut in the wall to allow the cooling water to exit the building. The wastestream observed was a very low flow (0.05 m^3/day), but contained elemental sulfur. This stream collected on the bare ground outside of the melting room.
- Contact Cooling Water - In the sulfonation plant, contact cooling water was used to cool the proportional pump for the molten sulfur. The cooling water discharge, as well as condensate from the heating steam, collected near the pump and flowed into a floor drain leading to the basin. This flow was small (0.05 m^3/day), but contained some elemental sulfur.
- Cyclone Discharge - Following separation of liquid product and waste SO_2/SO_3 gas in the separator, the off-gas wastestream, which contained SO_3, SO_2, and active matter, flowed to the cyclone for additional separation of liquid and gases. The cyclone produced liquid waste containing active matter (sulfonic acid) and a high percentage of free oil. When alkylbenzene sulfonic acid was the product, the liquid waste was recycled to the reactor (approximately 150 kg/day); however, if the product was lauryl alcohol sulfuric acid or lauryl ether sulfuric acid, the liquid waste could not be recycled and was drummed for storage and disposal (approximately 50 kg/day).
- ESP Discharge - Waste gas from the cyclone was sent to an electrostatic precipitator (ESP) for initial treatment prior to atmospheric discharge. The liquid wastestream generated by the ESP contained sulfuric acid, sulfonic acid, organics and water. Most of the material removed by the ESP was collected in plastic drums for storage and disposal; however, during the audit, spills and leaks were observed flowing to floor drains.
- Scrubber Discharge - Following the ESP unit, the waste gas flowed to the scrubber. The scrubber used an NaOH spray to remove additional SO_2 gas prior to venting to the atmosphere. The wastewater generated by the scrubber contained sodium sulfite and sodium sulfate and was discharged to the waste collection basin.

- Dryer Condensate - [Not yet in operation] For final products that required drying, an additional wastestream will be generated by the drying unit. Vapors collected during the drying process will be condensed and discharged to the collection basin. The contaminants in the condensate will depend on product produced. Products will include SLS and branched or linear ABS. Concentrations of these materials in the condensate will be in the range of 1-1.5 percent product.
- Cleaning Water - Wastewater was also generated intermittently during cleaning operations. Cleaning operations included:

  - Cleaning of the filter that followed the catalytic converter. This wastestream contained impurities removed from the SO_3 stream produced in the catalytic converter.
  - Cleaning of the sulfonator during product changeover or maintenance. This wastestream contained raw materials and reaction products.
  - Cleaning of the cyclone. This wastestream contained reaction products.
  - Cleaning of the neutralizer unit. This wastestream contained neutralized products.
  - Clean-up of leaks and spills, and floor washing activities. This wastestream contained raw materials and products.

Saponification

The audit team determined that during normal operation there was no discharge of wastewater from the saponification process. The facility used the process of saponification of fatty acids; thus, no glycerol or nigre was produced. During product drying, however, condensate from the vapor condensers was wasted to the collection basin intermittently. This discharge contained residual product material.

A wastestream was also generated during cleaning and maintenance activities. Cleaning was necessary during product changeover, and to maintain proper operation of equipment. Cleaning operations included:

- Dryer Cleaning - The wastewater generated from dryer cleaning contained 20-25 percent product. This wastestream was discharged to the collection basin.
- Equipment Cleaning - This wastestream contained 2-5 percent product, and was discharged to the waste collection basin.
- Mechanical Seal Cooling Water and Dryer Condensate Overflow - This wastestream contained traces of product and was discharged to the waste collection basin.
- Floor Wash and General Cleanup - This wastestream contained 1-2 percent product and was discharged to the waste collection basin.

Sodium Silicate Production

The processes involved in the production and dissolution of sodium silicate resulted in the generation of several wastestreams. The following discharges were identified:

- Contact Cooling Water - As noted in Section 4.1.3, the sodium silicate manufacturing operation used its own contact cooling water system. Water used to cool the sodium silicate casting belt was either evaporated or collected in a storage tank located just outside the melting building. Water in the collection tank was intermittently discharged to the collection

basin when it became contaminated. Wastewater generated from reject of contaminated cooling water contained sodium silicate, reaction impurities, and high pH.

- Storage Tank Sediment - Following the dissolution of the rock sodium silicate, the solution is stored in three storage tanks. Undissolved sodium silicate and impurities, including iron and aluminum, settle to the bottom of the storage tanks and must be removed periodically. To remove the sediment, the tanks were drained and the remaining sediment was flushed to the collection basin. The flushed material contained undissolved silicates, other impurities, and high pH.
- Filtered Solids - Prior to distribution, the dissolved sodium silicate was filtered to remove remaining solids. Solids removed by the filter under normal operation, and washing of plate filter for maintenance generated a wastestream that was discharged to the collection basin. The wastestream contained sodium silicate, impurities, and high pH.
- Cleaning Water - A wastestream was also generated in this process during routine maintenance and cleaning activities. The cleaning wastestream was discharged to the basin and contained sodium silicate, sodium carbonate, and silica sand.

Sodium Toluene Sulfonate Production

The STS manufacturing plant generated wastewater during the reaction process as well as from product drying and area maintenance. The following wastestreams were identified:

- Process Wastestream - The reaction of toluene and sulfuric acid generated a wastestream containing toluene and water. Toluene was recovered from the water/toluene mixture; however, a small amount of toluene remained in the process water. This water was partly reused in the STS process; however, most was discharged to basin. This wastestream contained toluene and STS.
- Dryer Condensate - Following reaction and neutralization, the STS was transferred to the vacuum dryer. Vapors from the dryer were collected and sent to a condenser. Condensate generated from this process contained STS and was discharged to the waste collection basin.
- Cleaning Water - A wastestream was also generated in this process during routine maintenance and cleaning operations. The cleaning wastestream was discharged to the basin and contained raw materials and STS.
- Contaminated Cooling Water - Although the cooling water and steam used in this plant were part of the centralized systems, described below, there was potential for contamination of these systems during STS production. Facility representatives indicated that while the cooling water did not come into direct contact with the reaction products, it was possible for the cooling water and steam to become contaminated by toluene due to leaks.

Alkanolamides Production

The production of alkanolamides from fatty acids generated a wastestream during the reaction process. Vapor from the reactor was condensed, cooled, and separated into two phases; aqueous, and "pasty waste." The aqueous phase contained from 0.2 to 1 percent product and was discharged to basin. The "pasty" phase contained 10 percent product and was either drummed for storage and

When alkanolamides were produced from methyl esters, the vapors generated by the process contained methanol. The methanol produced by the reaction was collected by JSC and sold as a useful by-product.

Cooling Water, Boilers and Other Waste Generating Activities

As indicated in Section 4.1, the JSC facility maintained a water treatment system, a centralized cooling water system, a centralized steam generation unit, and had several other miscellaneous water uses. Several of these activities generated significant wastewater discharges. These wastestreams included:

- Groundwater Well Sediment - During the operation of its groundwater well, the JSC facility generated sediments in its well water storage tank. This sediment was periodically flushed to the collection basin. The discharge was estimated at 10 m^3/month (0.4 m^3/day)
- RO Reject - During operation of the RO system for treating its groundwater supply, the JSC facility generated an RO reject wastestream. The operation also required periodic washing of the RO membrane filter. These wastestreams, which contained high TDS, were diverted to a holding tank on a neighboring farm and used for irrigation. The flow of reject and membrane filter wash was estimated at 21 m^3/day. In addition to these wastestreams, the operation of the RO unit also required periodic backwashing of the sand and carbon filters. Backwash streams were estimated at 0.5 m^3/day, and were discharged to the collection basin.
- Softener Regenerate - The JSC facility used water softeners to treat its water supply when the RO unit was not in operation. Periodic regeneration of softeners produced a wastestream containing high salt and TDS concentrations. This wastestream (approximately 2 m^3/day) was discharged to the waste collection basin.
- Boiler Blowdown - Operation of the boiler for steam generation required periodic blowdown to remove contaminated water. The blowdown wastestream contained chemicals added for corrosion control, high concentrations of TDS, and contamination from the condensate collected from the manufacturing processes. This wastestream was discharged to the waste collection basin.
- Oil Spill Clean-up - Maintenance of the boiler operation also resulted in losses of fuel oil to the boiler wastestream. Facility staff reported that fuel oil entered the system due to spills, primarily during loading and unloading operations, and clean-up activities. Wasted oil was clearly visible as a thick black coating on the surface of the waste collection basin. It was observed that this oil film likely reduced the evaporation rate from the collection basin.
- Cooling System Blowdown - Operation of the centralized cooling water system resulted in periodic blowdown to the waste collection basin. The cooling water blowdown contained biofouling control chemicals, high TDS, and contamination from manufacturing processes.
- Tanker Washing - The JSC facility performed tanker washing operations in open areas of the facility. The tankers were primarily used for product transfer. Wastewater generated during the washing operation was discharged directly to the street and eventually drained to the waste collection basin. The wastestream contained primarily product material.
- Domestic Wastewater - The canteen, washrooms, and sinks located throughout the facility produced a domestic (sanitary) wastestream. The sanitary sewer system was separate from all other drains, and was discharged to an unlined excavation for disposal. Neither a septic system nor drain field was utilized.

4.2.2 Materials Handling and Storage

During the site visit to the JSC facility, the audit team noted several areas within the JSC facility where protection against spills and accidental discharges had been provided. These included containment structures around storage tanks, covered areas for raw materials storage, and concrete pads and berms designed to prevent spills to the soil. In addition, the JSC technical manager indicated that a new materials storage hanger had recently been constructed, and that three larger hangers would soon be built. These buildings will reportedly be used to house raw materials, intermediates, products, and wastes, and will help to prevent contamination of soils and stormwater runoff.

While certain PP/WM measures were in place at the JSC facility, the audit team noted several areas where storage, handling, loading, unloading, or waste disposal practices provided opportunities for spills, leaks, and contamination of soil and groundwater. Materials observed in these areas included raw materials, intermediates, final products and solid and liquid wastes. The locations of areas where problems were identified during the site visit are indicated on Figure 9. A description of the identified problem corresponding to the number shown on Figure 9 is provided below.

Item 1 The area where oil was unloaded from tankers to storage tank was observed to have oil spills. There was no containment structure or concrete pad at the unloading area; thus, oil spills were discharged directly to the soil. Oil was observed on the soil in this area; however, the extent of the contamination could not be determined [Photos 1 and 2].

Item 2 Drum storage in the area near the liquid sodium silicate storage area was on bare ground on a steep hillside with no cover or containment. Drainage (during a rain storm) would likely flow to the collection basin [Photos 3 and 4].

Item 3 The area between the sulfur melting room and the sulfonation plant contained spilled sulfonic acid on bare ground. Also drainage of water from the sulfur melting room (containing elemental sulfur) was discharged to the ground in this area. Soil was contaminated; however the extent could not be determined.

Item 4 The loading area for raw materials and products near the sulfonation plant was observed to contain spills. Spills were from both raw materials and products manufactured in this area. The loading and unloading area was not lined; thus, spills were to the soil. The drainage (during rain) from this area appeared to flow toward the waste collection basin [Photos 5 and 6].

Item 5 Within sulfonation plant, sulfonic acid spills were observed on floor. These spills were reported to be generated by leaks and from sampling performed for product control. Spilled material was rinsed to drain leading to the waste collection basin.

Item 6 During the operation of the scrubber unit, the discharge was collected in barrels; however, some of the material was observed to overflow to the drain leading to the waste collection basin. The overflow contained sodium sulfite and sodium sulfate [Photo 7].

Item 7 The sulfur melting room was fully contained with no floor drains; however, condensate from the steam heating jacket and cooling water for the sulfur pump collected on the floor of the room and flowed through a hole in the wall to the ground. This discharge is described in Item 3, above [Photo 8].

Item 8 Scores of drums of sulfonic acid were stored on bare ground near the sulfur melting room and on a hillside nearby. The storage was on bare ground with no cover or containment. Both areas appeared to drain toward the waste collection basin [Photo 9].

Item 9 The dissolved sodium silicate storage tanks were located on a concrete pad with a wall around the tanks and loading area. However, an entrance for truck loading was constructed in the wall near the waste collection basin. Since there was no berm at the truck entrance, the containment would not contain large spills. In addition, there were floor drains located within the walled area to service filter cleaning and other cleaning and maintenance activities. Any spills in this area would reach the drain leading to the waste collection basin. Any large spills would reach the ground outside the wall and eventually drain to the waste collection basin.

Item 10 Hundreds of empty steel drums were stored in an area between the waste collection basin and the groundwater well. These drums had contained dry caustic soda delivered to the facility. Storage is on bare ground and is not covered or contained. Any drainage from this area (during rain) would go to the wadi.

Item 11 A large number of bags of sodium carbonate (used for manufacture of sodium silicate) were stored on the ground outside of the silicate melting plant. Several of these bags were torn open with dry material spilled on the ground. This area was not covered or contained. During a rain storm this area would drain directly to the wadi [Photo 10].

Item 12 Scores of drums were stored on the ground on the hillside near the sulfonation plant. Drums in this area were used for waste storage or were empty. No cover or containment was provided in this area. During a rain storm, this area would drain directly to the wadi.

Item 13 Several large bags of solid waste, including sodium sulfate generated by the STS plant and elemental sulfur from the sulfur filter, were stored on the hillside near the drums described in Item 12. Storage was on bare ground with no cover or containment. During a rain storm, this area would drain directly to the wadi [Photo 11].

Item 14 During the site visit, a tanker truck was being washed on the street near the sulfonation plant. Water drained from the tanker to the street and subsequently to the waste collection basin. The contents of the tanker were not determined.

Item 15 Fatty acids were sometimes delivered to the storage tanks at an unloading area above the STS plant. Spills of fatty acids were observed in the street at the unloading point. Although the street was paved, it appeared that some of the material had penetrated the pavement and reached the soil. Loose soil had also been used to soak up spills in this area. A large spill in this area would reach the street drains leading to the waste collection basin.

Item 16 The toluene storage tanks were contained on a concrete pad with a fully intact containment wall. However, within the containment area, a drain was observed that lead to the waste collection basin. This drain was reportedly open under normal operation; thus, any spill would not be contained, but instead would drain directly to the basin.

Item 17 Fatty acids were often loaded from an area between the toluene storage tanks and the STS building. Raw material spills were observed on the ground in this area. There was no cover or containment in this area.

4.2.3 Waste Collection Basin

The JSC facility had constructed a centralized "waste collection basin" [Photos 12 and 12] to collect nearly all wastewater generated by facility operations. Discharges to the basin included all process discharges, cooling water and boiler blowdown, softener regeneration water, and all floor and surface drains throughout the facility. The only discharges not directed to the basin were domestic wastes and RO reject.

The wastewater collection basin was constructed at the site in 1990 to prevent the direct discharge of untreated wastewater into the wadi. The basin was reportedly constructed of concrete blocks and lined with concrete to prevent seepage.

The basin was an irregular rectangular shape with rough dimensions, provided by JSC staff, of 32 m by 17 m. The average depth, from the top of the wall to the bottom of the basin, was reported to be approximately 8 m. Based on these dimensions, the capacity was calculated to be about 4,350 m^3. During the audit, the basin was observed to have approximately 1.5 - 2 m of freeboard remaining. This corresponded to a remaining storage capacity of about 950 m^3. Of the approximately 3,400 m^3 of waste material in the basin, the technical manager indicated that about one third to one half was comprised of solids (sediment), and the remainder was liquid.

As previously indicated, all drains in the facility, except domestic (sanitary) and RO reject, flowed to the basin. All wastestreams leading to the basin, except for surface discharges in the area of the silicates dissolution plant, combined at an open manhole near the basin, and flowed from this manhole through a single pipe into the basin.

The waste collection basin provided no treatment to the wastes collected. The JSC technical manager reported that there had been no discharge from the basin during its 4 years of operation. In addition, the manager also reported that neither liquid nor solid waste has been removed from the basin by waste hauler. The technical manager indicated that evaporation accounted for significant losses from the basin; however, an actual flow balance had not been performed around the collection basin to determine the fate of the various wastestreams. Without such a flow balance, it was unclear whether any of the wastewater in the basin had seeped into the surrounding soils.

Following the initial site visit, two members of the audit team returned to the site to collect samples of supernatant and sediment in the basin. The liquid samples collected were observed to be slightly cloudy and dark and exhibited a slightly "detergent-like" aroma. The sediments samples were multi-

38

colored and textured, and appeared to contain materials such as soap, sodium silicate, sand, active matter, and fuel oil adsorbed to solids. The samples collected were taken to the WAJ laboratories in Amman for analysis.

Based on the types of materials handled and produced by the JSC facility, the audit team requested analyses of the waste collection basin supernatant to be performed for BOD5, COD, TSS, TDS, TKN, SO_4, ABS, and toluene. The audit team also wished to perform a scan for volatile and semi-volatile organic pollutants; however, due to technical difficulties, the analysis was unavailable. Samples of the basin sediment were also collected for analyses; however, technical difficulties prevented their analyses.

Results of the analyses are presented in Table 3, and indicated that the basin contains high concentrations of oxygen demanding organic pollutants, suspended and dissolved solids, nitrogen, surfactants, and some toluene. These pollutants and concentrations were consistent with the types of wastes known to be discharged to the basin. The oxygen demanding pollutants also appeared to be generally biodegradable due to the relatively low COD/BOD ratio (approximately 2).

While toluene was determined to be present in the basin, its concentration at the time of sampling was not particularly high. Because toluene is a volatile pollutant, and because the STS plant had been inoperative for some time prior to the audit, it was expected that the toluene concentration in the basin would be low. However, its presence indicated that some amount of toluene was entering the wastestream and collecting in the basin. It is also possible that other toxic organic pollutants may be present due to the breakdown of toluene or other organic material in the basin.

4.3 AIR EMISSIONS AND SOLID WASTES

While the focus of the PP/WM and water conservation audit was related to water use and wastewater generation, the solid wastes generated, and the pollutants discharged to the atmosphere were also examined. The brief overview of the air emissions and solid wastes generation and disposal practices identify key wastestreams and discharge practices observed during the audit.

Air Emissions

The principal atmospheric discharge generated at the JSC facility, was the SO_2 wastestream from the sulfonation plant. The SO_2 in the combustion unit was converted to SO_3 in the catalytic converter at a 98 percent efficiency. Following the sulfonation reactor, most of the residual SO_3 was removed by the cyclone and the ESP unit, and the residual SO_2 was removed in the scrubber. The exhaust from the scrubber contained trace amounts of SO_2 (reported as less than 5 ppm) and approximately 15 ppm of SO_3. There was no routine monitoring of this emission; however, the facility indicated that the ESP and scrubber were oversized for this wastestream and should provide adequate treatment. A process diagram of the ESP and scrubber units is provided in Figure 2.

In addition to the SO_2 emission, the burners for facility's boiler operation, sodium silicate kiln, and multi-purpose dryer, also generated an air emission. The JSC facility burned approximately 100 tons/month of heavy fuel oil which resulted in emissions of hydrocarbons, particulates and SO_2. No monitoring of this emission had been performed.

The JSC facility also reported that it had burned waste sulfur to reduce its quantity of solid waste. This open burning of sulfur resulted in emissions of SO_2. No monitoring of emissions was performed.

An additional area of atmospheric contamination was observed in the sodium silicate production area. Silica and sodium carbonate dust was generated during the measuring and blending process, and sodium silicate dust was generated following the melting process from handling and storage of rock sodium silicate. Dust control was provided by a water spray in mixing of raw materials, and workers were reportedly provided with filters.

Although the STS plant was not in operation during the audit, it was reported that toluene fumes were occasionally present in this area. Toluene storage tanks were fitted with vapor traps to control fumes in the storage area, however, some fumes were generated during loading and unloading operations, and by minor spills and leaks in the production area.

Solid and Drummed Wastes

The JSC facility operations resulted in the generation of significant quantities of solid and drummed waste. These wastes were generally drummed or bagged and stored indefinitely on the facility grounds. The JSC staff indicated that approximately 645 drums had accumulated at the facility at the time of the audit. Assuming approximately 80 kg/drum, this represents over 50 tons of stored wastes. In addition, the facility reported that an additional 10 tons of solid sulfur waste, and 10 tons of solid sodium sulfate waste were also stored on site. The storage and handling of these wastes was discussed, in part, in Section 4.2.2. Wastes generated by the facility include:

Sulfonation:

- Off-Spec Material - Approximately 10 tons per year of off-spec materials were generated by the sulfonation plant. The off-spec materials were primarily sulfonic acid and were generally stored in plastic drums at several locations around the facility.
- Sulfur Waste - Sulfur rejected from the sulfur filters following melting generated approximately 12 tons of solid waste per year. The waste was bagged and stored in open areas around the JSC facility. Facility staff reported that some waste sulfur had been sold to farmers and that some had been burned at the site. Current accumulated quantities were reported to be approximately 10 tons.
- Cyclone Discharge - The liquid separated in cyclone was either recycled to the process, or was drummed and stored on site. This material was stored in open areas at the facility.
- ESP Discharge - The ESP unit discharged "oleum" that was collected in barrels for storage and disposal. The waste oleum was stored in open areas at the JSC facility.

STS Production:

The STS process generated an estimated 10 tons per year of solid sodium sulfate wastes (combined with some STS). This waste material was bagged and stored on site.

Alkanolamides Production:

The alkanolamides plant generated a small amount of "pasty" waste during the production of both monoethanolamide and diethanolamide. Some of the pasty waste was stored on site in drums, while the remainder was discharged to the waste collection basin. In addition, methanol, recovered from the processing of methyl esters, was drummed and sold as a useful by-product.

Saponification:

Start-up of saponification unit generates large quantities of off-spec soap. Solids are generally recovered and reprocessed; however, a portion was disposed of as solid waste. Although the precise amount of waste was not known, it was reported to be a small quantity.

Other:

- Leaks and Spills - Miscellaneous wastes (from leaks, spills, etc.) were drummed in the various plants and stored at the JSC facility. Many of the drums were not labeled; thus, identification was difficult.
- Empty Drums - The facility also stored many empty drums from which raw materials had been removed. These empty drums resulted in additional solid wastes.
- Empty Sacks - Empty and partly empty sacks of dry raw materials (e.g., soda ash) were stored at several locations throughout the facility. Sacks and spilled product generated an additional solid waste at the facility.

4.4 DATA GAPS

The audit of the JSC facility resulted in the collection of a large volume of information regarding process operations, water use and disposal practices, and other waste generation practices. The JSC facility staff were extremely helpful in providing process information and in characterizing water use practices and wastewater discharges and contributed significant time and effort to the project. While the information obtained during the audit was useful, and provided sufficient basis for identifying PP/WM and water conservation opportunities, several data gaps were identified. These included:

- Facility Water Balance - Since no water balance existed for the facility, unit process flow estimates were developed by the JSC technical manager and audit team members during the audit. These estimates were based on the best professional judgement of the JSC staff and were the basis for the process flow diagrams presented in this report. While these estimates provided a sound basis for identifying PP/WM and water conservation opportunities, data was not sufficient to perform a complete mass balance or to accurately predict specific water savings.
- Plant Operational Practices - An additional difficulty encountered during the audit, was the lack of operational units at the JSC facility. During the initial site visit (September 20, 1994), only the sulfonation plant was operating, and during the subsequent visit (September 25, 1994) none of the plants were operating. While the audit team was able to utilize process and flow balance information provided by JSC staff as the basis for identifying PP/WM and water conservation opportunities, it was not possible to identify PP/WM opportunities related to observations of actual operation and maintenance activities. In addition, monitoring performed during the

follow-up visit could not be performed at any of the unit process operations. This prevented the team from assessing the potential impact of individual processes on the overall wastestream.

- Waste Collection Basin - Little documentation was available regarding operation of the waste collection basin. The JSC facility had not previously monitored influent or effluent flow to the basin. Calculations performed using discharge data provided by JSC staff, indicated that approximately 27 m^3/day of wastes were sent to the basin. Assuming an evaporation rate of 10 mm/day (5.4 m^3/day), and 300 day/yr operation, this would result in an annual net discharge to the basin of over 6,000 m^3. Since the capacity of the basin is only 4,350 m^3, and it currently holds over 3,400 m^3 of wastes, a discrepancy clearly exists. If, as reported, wastewater is not removed from the waste collection basin, then leaks or some other mechanism must be contributing to the observed losses. Additional data should be collected to more accurately assess the operation of this basin.
- Solid and Drummed Wastes - The JSC facility stored over 600 drums of off-spec product, intermediates, and wastes throughout its facility. An estimate of the numbers of drums and the mass of the stored material was provided during the audit. However, the drums at the facility are not generally marked or labeled and no tracking system for these material exists. Solid wastes in bags and drums was handled similarly.

42

5.0

POLLUTION PREVENTION AND WASTE MINIMIZATION OPPORTUNITIES

5.0 POLLUTION PREVENTION AND WASTE MINIMIZATION OPPORTUNITIES

During the audit of the JSC facility, conducted on September 20, 1994, and during several subsequent visits, the audit team identified a variety of PP/WM opportunities. While the focus of the audit was on PP/WM activities related to wastewater discharges, several opportunities related to air emissions, and solid wastes were also identified. The audit findings related to PP/WM activities are provided in this section.

While the JSC facility reportedly does not normally discharge a process wastestream to the wadi, it does route its total facility discharge to the wadi during storm events. The discharge from the JSC facility to the wadi, under any circumstance, is governed by Jordanian Standard 202, which limits industrial point source discharges to wadis and rivers. A comprehensive overview of the Jordanian Standard 202, and other applicable regulations, is provided in Appendix C. A comparison of these standards with the characteristics of the supernatant in the JSC waste collection basin is provided in Table 3. While the contents of the basin are not directly discharged, the facility's wastestream during a storm event would likely contain similar types of contaminants and concentrations. Assuming that the supernatant and the wet weather discharge have similar characteristics, the comparison indicated that the JSC facility may not be able to meet the applicable standards during a discharge event. It should be noted, however, that no actual discharge data had been collected since construction of the basin.

The audit team evaluated the JSC facility operation and identified potential opportunities to reduce loadings from the facility to the collection basin and, under storm conditions, to the wadi. In addition, several PP/WM techniques described in this report could result in the recovery of useful materials by the JSC facility.

While the literature defines "pollution prevention" as the elimination of pollution before it is created and "waste minimization" as the reduction of the amount of waste generated, this report will use the terms interchangeably. Regardless of the terminology, the PP/WM opportunities identified in this report will focus on reducing the impact of the discharges from the JSC facility on the waste collection basin, groundwater, and the wadi.

In general, the PP/WM opportunities identified for the JSC facility could be arranged in three general categories:

- Process Control;
- Materials Handling and Storage; and
- Control of Other Waste Generating Activities.

A description of these categories, and the PP/WM opportunities identified for each is provided in the following sections.

5.1 PROCESS CONTROL

During the audit, the audit team identified a number of PP/WM opportunities directly related to the operation of the unit processes at the JSC facility. PP/WM opportunities in this category included, optimization of raw material use, modifications to equipment maintenance practices, optimization of process operations (including reactors), and modification of routine cleaning and maintenance operations. While the PP/WM opportunities identified in this section are intended to reduce waste generated, the audit team is aware that changes to process operations may result in unanticipated consequences. The JSC facility, should fully evaluate the options presented before modifying process operations.

Sulfonation/Sulfation

Several PP/WM opportunities were identified for the sulfonation plant at the JSC facility. These included:

- Reduction in Use of Branched Alkylbenzene - The JSC facility could evaluate the opportunity for reducing or eliminating the use of branched alkylbenzene. Branched alkylbenzene products are not as susceptible to biodegradation as their linear counterparts. Minimization of the use of this raw material, therefore, would enhance the treatability of the wastes generated in the sulfonation plant.
- Sulfonator Optimization - The JSC facility could evaluate and optimize the operation of the sulfonation film reactor to eliminate the generation of unreacted or charred materials. Film thickness in the reactor could be maintained at the optimum thickness by precise control of raw material feed rate. Temperature must also be carefully controlled to reduce the generation of charred material that is separated in the cyclone. Reactor optimization will also reduce SO_3 waste that is removed by the ESP.
- Utilization of Sealless Pump - The JSC facility could investigate the possibility of using a sealless pump for transporting molten sulfur. This would prevent contamination of cooling water.
- Leak Control - The JSC facility could provide additional maintenance to minimize leaks within this plant.
- Spill Prevention - The JSC facility could develop measures and provide training to staff in order to reduce the potential for spills within the plant.
- Sulfur Quality Control - The JSC facility could investigate the cost/benefit of obtaining a cleaner sulfur supply to reduce the volume of solid sulfur waste generated by the sulfur filters. In addition, more careful raw material handling in the sulfur storage area could result in introduction of fewer impurities from cleanup of spillage.
- Catalytic Converter Optimization - The JSC facility could evaluate the operation of the catalytic converter to optimize operation and reduce SO_2 emissions. Temperature control within the converter could be carefully monitored and optimized in order to maximize SO_3 generation and minimize the residual SO_2.

Saponification

PP/WM opportunities identified for the saponification plant included:

- Reactor Optimization - The saponification reaction temperature could be optimized to avoid line blockages and unnecessary product wasting during cleaning (unblocking) operations.

45

- Leak Control - The equipment in the saponification plant could be maintained more rigorously to reduce steam leaks. Audit findings indicated that steam leaks were causing soap contamination of steam condensate, resulting in its discharge to the basin instead of recycling to the condensate recovery system.
- Production Schedule Optimization - The production schedule could be modified and optimized to prevent frequent changes of products and reduce start-up losses. Practices observed during the audit resulted in the generation of significant quantities of off-spec soap during start-up operations. While the JSC facility stored the material for reprocessing, its storage capacity was limited, and it appeared that some quantity of soap would be wasted.

Sodium Silicate Production

PP/WM opportunities identified for the sodium silicate melting and dissolution operations included the following:

- Elimination or Minimization of Contact Cooling - The JSC facility could investigate the opportunity for using a non-contact cooling water stream, or measures to minimize use of contact cooling water, for the casting belt. Use of a non-contact system would eliminate the periodic wasting of the contaminated cooling water wastestream (7.33 m^3/day) to the collection basin. Alternatively, JSC could minimize the contamination of the contact cooling water and more effectively use the stream for product dissolution. The current wastestream was reported to contain 5 -10 percent sodium silicate.
- Sediment/Filter Solids Control - The JSC facility could investigate possible ways to minimize sediment in the dissolved sodium silicate storage tanks. Less sediment in these tanks would result in less waste from the tank and filter to be removed, and flushed to the waste collection basin, and higher quality product. With respect to product quality, residual solids in the dissolved sodium silicate can damage pumps in powder detergent plants; thus, reducing the attractiveness of the JSC product. Methods to reduce sediment generation could include:

  - Increasing the purity of raw materials, and in particular, the silica sand. Impurities in the silica sand result in unreacted material in the rock sodium silicate that will not be dissolved in the dissolution process.
  - Optimizing the operation of the kiln to maximize reaction of raw materials and reduce unreacted by-products sent to the dissolution unit.
  - Optimizing the dissolving conditions in the autoclave to ensure that dissolution occurs to the highest extent possible.

- Dust Control - The JSC facility could implement additional dust control measures to reduce opportunities for worker exposure to silica dust. Exposure to silica dust can result in silicosis; a significant long-term respiratory disorder.

Sodium Toluene Sulfonate Production

PP/WM opportunities for the STS operation included the following:

- Elimination of Toluene Discharge - Water remaining following separation of toluene from the toluene/water mixture, could be stored and fully reused in the process in lieu of discharge to the collection basin. Storage and reuse efforts may require construction of an additional storage tank

in the STS facility. Alternatively, the water contaminated with toluene could be treated by activated carbon, air stripping, or other means, and reused, or in some way segregated from other plant discharges. Audit findings indicated that the waste collection basin contained detectable concentrations of toluene (0.45 mg/l). Based on JSC plant operations, the STS unit is the only source of toluene to the basin. Confining all wastes generated by the STS operation, and segregating STS wastestreams from other plant discharges, would prevent toluene contamination from affecting overall plant wastewater characteristics.

- STS Cooling Water Segregation - The use of the central cooling water system for the STS plant could be eliminated by constructing an STS specific cooling system. Additionally, a toluene leak detection system could be installed to minimize the loss of toluene to the cooling circuit. Use of a system specifically for the STS plant would prevent contamination of the entire central cooling system (50 m^3).
- Leak Control - The equipment in the STS plant could be maintained more rigorously to reduce or eliminate possibilities for the cooling water and steam to become contaminated by toluene due to leaks. Audit findings indicated that JSC must periodically blowdown the central cooling system, due in part to leaks of toluene to the system. This results in a discharge of 50 m^3 of toluene contaminated wastewater to the collection basin, and requires refilling of the cooling circuit with fresh water.

Alkanolamides Production

The operations at the Alkanolamides facility did not result in the generation of significant amounts of waste; however one PP/WM opportunity was identified by the audit team. This opportunity related to the discharge of "pasty" wastes to the collection basin. To reduce the discharge of this wastestream to the collection basin, the JSC facility could ensure that all of the pasty wastes generated are drummed. Audit findings revealed that some of the pasty waste is currently discharged to the basin; however, the quantity was reported to be quite small.

5.2 MATERIALS HANDLING AND STORAGE

During the audit site visit, the audit team noted a variety of materials handling and storage practices at the JSC facility that could result in the discharge of pollutants to the wadi during a storm event, or which could contaminate surrounding soils. The findings of the audit team regarding these practices were provided in Section 4.2.2, and their locations indicated on Figure 9. The following PP/WM opportunities were identified by the audit team to address these findings.

1. Concrete loading and unloading areas could be constructed utilizing containment berms and rain covers to isolate spills, prevent soil contamination, and eliminate stormwater runoff. Items 1, 4, 15, and 17 of Section 4.2.2 identified spills to the bare ground in the areas of truck loading and unloading. In each of these areas, the loading and unloading facilities were in areas that were not paved, bermed, or covered. Spills in these areas were allowed either to soak into the soil, or were simply covered with soil to soak up spilled material.

2. Drummed and bagged raw materials, intermediates, products and wastes could be stored in covered areas with concrete floors and spill containment berms. Storage in this manner would isolate spills and prevent stormwater contamination. Items 2, 8, 10 and 12 of Section 4.2.2 identified drum storage on bare ground with no cover or containment. Many of the drums were

leaking and had contaminated soil in these areas. The drainage in several of the storage areas appeared to flow directly to the wadi. Additionally, Items 11 and 13 identified large bags of raw material (sodium carbonate) and solid waste (sulfur and sodium sulfate) stored in the open on bare ground.

3. The drainage hole cut in the wall of the sulfur melting room could be sealed. This would prevent the discharge of pump cooling water and condensate from the heating jacket from reaching the bare ground near the sulfonation plant. Additionally, the waste sulfur accumulating in the area of the melting unit could be periodically removed by dry methods to lessen the sulfur contamination of the water collecting in this area. Items 3 and 7 of Section 4.2.2, identified the current practice of providing drainage from the sulfur melting room to the ground.

4. Leaks and spills throughout the JSC facility could be removed by absorbent materials, or other dry cleaning methods, and not rinsed to the collection basin. In addition, where barrels are used to collect overflow from process units, these collection vessels could be replaced more frequently to ensure they do not overflow to the collection basin. Items 5 and 6 of Section 4.2.2 described spills and overflows in the sulfonation plant.

5. Containment structures constructed to prevent spills from reaching bare ground or the wadi could be repaired and maintained to ensure their proper operation. Where drains are located in these containment structures, they should be closed under normal circumstances, and opened only to remove uncontaminated stormwater or washwater. Items 9 and 16 of Section 4.2.2 describe the audit findings regarding various containment structures.

6. Tanker truck and barrel washing could be performed off site at a suitable location, or within an area of the JSC facility designed to contain truck and barrel washing discharges. Item 14 of Section 4.2.2 describes the findings of the audit regarding truck washing activities.

5.3 CONTROL OF OTHER WASTE GENERATING ACTIVITIES

The audit team identified several additional PP/WM actions that did not relate directly to process operations, or to the handling and storage of materials. Instead, these opportunities addressed the disposition and treatment of the solid and drummed liquid wastes generated by various processes, the operation of central utilities, such as the cooling and steam systems, and operation of the waste collection basin. Opportunities in these specific areas are provided in the following sections.

5.3.1 Solid and Drummed Wastes

[redacted]

- Utilization of Charred Material - The JSC facility could investigate the re-introduction of additional charred material, generated in the sulfonation reactor and removed by the cyclone, to the final product. While the charred material is off-color, it can be combined with the product in small quantities without affecting product quality. This practice is currently conducted on a small scale; however, it should be maximized to decrease the wasting of excess charred material.

- Utilization of Sodium Silicate Sediment - The JSC facility could investigate alternative uses for the sediment collected in the dissolved sodium silicate storage tanks and for the solids removed from the plate filters used to remove impurities during transfer from the storage tanks to the final product tank. The audit findings indicated that some of these solids were used for building construction purposes. As the material is solid, and relatively inert, it should be collected as a solid and used, where possible, or collected and disposed of as a solid waste.
- Utilization of Sodium Sulfate Wastes - The JSC facility could investigate the use by other companies of the waste sodium sulfate generated by the STS process. Additionally, the process should be optimized to reduce the generation of this material to the extent possible. Audit findings indicated that approximately 10 tons/yr of this solid waste was generated by JSC. While the sodium sulfate is slightly contaminated by STS product, other firms may be able to use this material.

Each of the above suggestions relate to the use of "waste" materials generated by the JSC facility by other individuals or companies. While these materials are considered wastes by JSC, they may be of use as raw materials for others. Industries and trade organizations in the US and other nations have developed "waste exchange" programs to facilitate the identification of such opportunities. A waste exchange program identifies wastes generated by industries and notifies other industries of the availability of these materials at little or no cost. Governments may also play a role in the waste exchange program by acting as a clearinghouse for this type of information. Utilization of these materials as useful products will reduce not only the cost of disposal for the generators, but provides a source of low cost raw materials for others.

5.3.2 Utilities Wastes

PP/WM opportunities related to the operation of central utilities at the JSC facility included:

- Utilization of RO Reject - RO reject and membrane filter water could be removed from use in irrigation of adjacent farm land. The reject water could instead be evaporated, or disposed of in an environmentally sound manner, to prevent TDS contamination of soil. Audit findings indicated that approximately 21 m^3/day of RO reject, which contained a TDS concentration exceeding 7,000 mg/l, was provided to a local farmer for irrigation. Although the farmer reportedly mixed the RO reject with additional well water, it is likely that the irrigation water would exceed the 202.
- Utilization of Recovered Fuel Oil - The JSC facility could revise boiler maintenance procedures to prevent the discharge of waste fuel oil to the waste collection basin. In addition, an oil water separator could be installed prior to the waste collection basin to prevent waste fuel oil from contaminating the basin. The audit findings indicated that a thick film of waste oil was present on the surface of the waste collection basin and that oil was also present in the sediment sample withdrawn from the basin. Recovered oil could be used for low quality burning purposes at the facility.

- Leak and Spill Prevention - Leaks and spills throughout the JSC facility could be minimized to prevent contamination of the centralized cooling and steam systems. Audit findings indicated that contamination of the cooling system by toluene and other materials, and of the condensate return system by various raw materials and products, resulted in periodic wasting of these systems to the collection basin.
- Domestic Waste Treatment - The JSC facility could construct an engineered septic tank with a suitable leach field to treat the domestic wastes generated by the facility. Audit findings indicated that the current practices involved discharge of domestic wastes to an open excavation.

5.3.3 Waste Collection Basin

Although the waste collection basin does not "generate" wastes, the proper operation of this unit is critical to the prevention of pollution at the JSC facility. The following PP/WM opportunities are provided to ensure proper operation of the basin:

- Optimize Operation of the Collection Basin - The JSC facility could carefully study the operation of the waste collection basin to ensure that wastewater does not leak or drain from the basin to the ground or to the wadi. Information provided by the JSC facility indicated that the net discharge to the basin, accounting for evaporation (10 mm/day), was over 6,000 m^3/yr. Because the total capacity of the basin is only 4,350 m^3, and because the basin has been in operation since 1990, a considerable volume of wastewater is unaccounted for.
- Prevent Seepage from the Collection Basin - The JSC facility could evaluate the possible migration of wastewater from the basin to the soil and groundwater. To perform the evaluation, monitoring wells could be constructed near the basin to determine if leakage has occurred, and if so, the extent of the migration.

A general assessment of the local hydrogeological conditions, provided by MWI, indicated that the depth to the upper aquifer was approximately 60 m. The geology in the immediate vicinity of the JSC facility has not been fully explored; however, it consists primarily of limestones, chalky limestones, marls and clays. Geological features including cracks and flexures intersperse the area and generally control the movement of groundwater. Since hydrogeological information for the area immediately surrounding the JSC facility was not available, and because no estimate of potential leakage from the basin had been developed, an evaluation of the potential for groundwater contamination was not developed for this report. It is likely, however, that contaminants in the upper, unsaturated, soils near the JSC facility, would be flushed toward the wadi during a storm event.

6.0

WATER CONSERVATION OPPORTUNITIES

6.0 WATER CONSERVATION OPPORTUNITIES

Water conservation is an extremely important concern in the Zarqa Basin and throughout Jordan. The limited water resources require that businesses and industry view water as a valuable raw material and optimize its use. In order to optimize water use, business and industry should carefully monitor flows and uses within facility operations and develop a written strategy to coordinate water conservation activities.

While water conservation is an important concern, the use of water at the JSC facility is necessary for the production of a high quality product. The water conservation opportunities identified in this report, therefore, should be evaluated by the JSC facility to assess possible adverse impacts on production processes. While current water use is relatively low at the JSC facility, the audit team is confident that opportunities for water use reductions are available. A summary of the water conservation opportunities identified by the audit team is provided in Table 5, and indicates that a total water savings of 22 percent may be possible for JSC.

Additionally, it is possible for the JSC facility to treat its wastewater using a combination of physical, chemical and biological treatment units in order to completely recycle or reuse its process wastestreams. Due to the significant costs involved in developing such a system, and the difficulty of producing an effluent of sufficient quality to meet the needs of the JSC operation, this option is not developed further in this report.

6.1 PROCESS CONTROL

[redacted]

- Minimization of Scrubber Water - The JSC facility could maximize the air to water ratio in the scrubber unit in order to minimize water use necessary for this unit to operate effectively. Based on current flow estimates, approximately 7 m^3/day of spray water is used by the unit.

Saponification

- Leak Prevention/Condensate Reuse - JSC could provide additional maintenance for the saponification process to prevent wasting of cooling water and steam condensate due to contamination. Currently contamination by soap is requiring wasting of 1 m^3/day of cooling water and condensate to the collection basin instead of returning it to the condensate recovery system. Assuming that leak maintenance would reduce the required wasting by 75 percent, this would result in the elimination of the need for 0.75 m^3/day of make-up water.

Sodium Silicate Production

- Elimination of Contact Cooling for Casting Belt - Contact cooling of casting belt could be replaced by a non-contact system. Current practice results in evaporative loss of about 7 m^3/day and a discharge to the collection basin of about 7 m^3/day (approximately 16 percent of total facility consumption). Assuming that a non-contact system would reduce this by approximately 75 percent, this would save 11 m^3/day, or about 12 percent of the total water consumed at the JSC facility.
- Maximization of Cooling Water Reuse - The JSC facility could maximize its use of the casting belt cooling water for dissolution of rock sodium silicate. This would result in the need for less make-up water, and less overall water use, in the sodium silicate production and dissolution plant.

STS Production

- Process Water Reuse - JSC could recycle all water following toluene recovery and reduce the need for fresh make-up water. Current practices identified during the audit indicated a discharge of 0.07 m^3/day of toluene contaminated process water. Recycling of this stream, therefore, would eliminate the need for 0.07 m^3/day of fresh water.
- Cooling Water Segregation - The cooling water system for the STS plant could be segregated from the central cooling system to prevent contamination. Current practice requires periodic blowdown of central cooling system due, in part, to toluene contamination. Complete refilling of the cooling system requires approximately 50 m^3 of fresh water. Assuming that the need for complete refilling of the system due to toluene contamination occurs once every 3 weeks a water savings of 2.4 m^3/day would be achieved.
- Dryer Condensate Reuse - The JSC facility could investigate possible in-plant uses, such as equipment or floor cleaning, for the condensed vapors from the STS drying unit. The wastestream was discharged to the collection basin; however, it was relatively clean, containing approximately 3 percent STS. Assuming 25 percent of the condensate could be used in place of fresh water, a water savings of approximately 0.21 m^3/day would be anticipated.

6.2 COOLING AND BOILER WATER

Additional water conservation opportunities were identified by the audit team for the central cooling and boiler systems. These opportunities included:

- Pre-treatment of Cooling Water - The JSC facility could use RO water or softened water for cooling water make-up. Current practice used untreated well water, or tanker water, containing high TDS. As water was lost from the system, TDS concentrations increased and resulted in frequent blowdown. Use of treated water would decrease blowdown frequency and reduce the need for make-up water. The JSC facility estimates that 1 m^3/day is sent to the basin as blowdown. Assuming a 50 percent reduction in the need for blowdown due to use of pre-treated make-up water, a savings of 0.5 m^3/day would be expected.
- Maximization of Heat Recovery - All means could be investigated for heat recovery prior to release of any waste gases/steam to the atmosphere. This may result in conservation of energy and reduce water consumption through the need for less make-up water for steam generation.
- Reduction of Steam Losses - The JSC facility could provide additional maintenance to prevent steam leaks. Evaporative losses are estimated to be approximately 33 m^3/day throughout the facility. Assuming a 15 percent reduction due to improved maintenance, a savings of 5 m^3/day would be anticipated.

6.3 FLOOR WASH AND CLEANING ACTIVITIES

The audit team identified several opportunities for water conservation related to general cleaning and maintenance activities. The following suggestions are provided:

- Floor Washing and Equipment Cleaning - The JSC facility indicated that approximately 2 m^3/day of fresh water was used for floor washing and equipment cleaning activities throughout all plant areas. The audit team observed that low pressure hoses were used for simple cleaning tasks. The JSC facility could replace the low pressure hoses with a high pressure system. Assuming that the high pressure system would reduce overall cleaning water use by 15 percent, a savings of 0.3 m^3/day would be anticipated.
- Truck Cleaning - The JSC facility could provide additional draining of product prior to washing tankers, and use a high pressure washing system to reduce water use. Truck cleaning operations at the JSC facility used approximately 2 m^3/truck, and washed approximately 120 trucks per year. This resulted in a fresh water consumption of about 0.8 m^3/day. Assuming that the additional draining time, and use of high pressure hoses would result in a 50 percent reduction in water use, a savings of 0.4 m^3/day would be expected.

7.0

CONCLUSIONS AND RECOMMENDATIONS

55

7.0 CONCLUSIONS AND RECOMMENDATIONS

During the audit conducted at the JSC facility, JSC staff and management were extremely helpful in providing access to facility operations and in providing requested information. The staff and management of the JSC facility also expressed a sincere concern regarding current wastewater generation and water consumption practices at their facility. During the audit, and subsequent sampling visit, the audit team collected baseline information and conducted an initial assessment of the opportunities for the application of PP/WM and water conservation techniques. The findings of the audit were presented in Sections 4.0, 5.0, and 6.0 of this report.

Based on the process evaluation and the assessment of PP/WM and water conservation opportunities conducted during the audit, the audit team identified the following conclusions and recommendations. The audit conclusions are provided in Section 7.1 and the recommendations for PP/WM and water conservation techniques are provided in Section 7.2.

7.1 CONCLUSIONS

Based on the findings of the audit conducted on September 20, 1994, and subsequent follow-up visits, the audit team developed the following conclusions regarding the operation of the JSC facility:

1. The JSC facility produces a variety of sulfur and non-sulfur based products for use in the soap and detergent manufacturing industry. Products are consumed by end users in Jordan and are exported to other countries in the region.

2. The JSC facility is sub-divided into five major production plants where similar types of products are produced. The major plants are:

   - Sulfonation/Sulfation Plant;
   - Saponification Plant;
   - Sodium Silicate Production Plant;
   - Sodium Toluene Sulfate (STS) Production Plant; and
   - Alkanolamides Production Plant.

3. In addition to specific production plants, the JSC facility operates a groundwater well with an RO treatment system, a centralized cooling water system, a central steam boiler, and a water softener unit.

4. The JSC facility uses approximately 90 m^3/day of fresh water for process operations. The water source for the facility is either its groundwater well, or a tanker supply when the well is not in operation. When the well is in operation, an additional 21 m^3/day of water is required for the reject stream and to wash the membrane filter.

5. Water is used at the JSC facility for a wide variety of purposes. Major uses include process reaction water, contact and non-contact cooling water, steam generation, and cleaning and maintenance activities. In general, water use at the facility is not excessive; however, opportunities for PP/WM conservation were observed.

6. Waste generation at the facility occurs in nearly all production areas. Wastes include liquids, solids, and gases. Contaminants in the wastes include raw materials, intermediates, products and product impurities. Typical pollutant parameters include: BOD5, COD, TSS, TDS, TKN, ABS, SO_4 and toluene.

7. Liquid wastes are discharged primarily to the centralized waste collection basin; however, some smaller streams are drummed and stored for disposal. The domestic wastestream is segregated from the process stream, and is discharged to an open excavation.

8. The centralized waste collection basin is a concrete structure designed to hold all facility wastestreams. No treatment is provided by the basin. The facility reports that the basin was constructed in 1990 and that no discharge from the basin has been necessary. No flow monitoring has been performed to determine the operational characteristics of the basin; however, flow estimates indicate that more water (and solids) enter the basin than can be accounted for.

9. During storm events, the entire discharge from the JSC facility is diverted away from the collection basin and discharged directly to the wadi. While this is an infrequent occurrence, it results in the discharge of untreated wastewater to the wadi.

10. Solid and drummed wastes are stored throughout the JSC facility. While some containment measures have been provided, many of the wastes were stored on bare ground, with drainage directly to the wadi. Leaks and spills due to loading and unloading practices, and discharges from tanker truck washing were also observed.

7.2 RECOMMENDATIONS

Based on the PP/WM and water conservation opportunities identified and discussed in Sections 5.0 and 6.0 of this report, the audit team provides the following recommendations. These recommendations are grouped into three categories:

- Process Operations;
- Materials Handling and Storage; and
- Other Waste Generating Activities.

The opportunities recommended in this section relate to both PP/WM and water conservation techniques. Generally, the PP/WM opportunities are listed first, followed by the water conservation opportunities.

7.2.1 Process Operations

Water Conservation and PP/WM opportunities recommended in this section relate to practices directly attributable to a specific plant operation. The recommendations are grouped under the heading of the specific operation. The following recommendations are provided:

5

1. Sulfonation/Sulfation

- Sulfonator Optimization - The JSC facility should evaluate and optimize, if possible, the operation of the sulfonation film reactor to eliminate or minimize the generation of unreacted or charred materials.
- Reduction in Use of Branched Alkylbenzene - The JSC facility should evaluate the economic aspects of reducing or eliminating the use of branched alkylbenzene.
- Utilization of Sealless Pump - The JSC facility should investigate the possibility of using a sealless pump for transporting molten sulfur. This would prevent contamination of cooling water.
- Leak Control - The JSC facility should provide additional maintenance to minimize leaks within this plant.
- Spill Prevention - The JSC facility should develop measures and provide training to staff in order to reduce the potential for spills within the plant.
- Sulfur Quality Control - The JSC facility should investigate the cost/benefit of obtaining a cleaner sulfur supply to reduce the volume of solid sulfur waste generated by the sulfur filters.
- Catalytic Converter Optimization - The JSC facility should evaluate the operation of the catalytic converter to optimize operation and reduce SO_2 emissions.
- Leak Prevention - JSC should provide additional maintenance to prevent or repair leaks as soon as possible.
- Elimination or Minimization of Contact Cooling for Sulfur Pumps - Contact cooling water for sulfur pumps should be replaced by a non-contact cooling water system or by sealless pumps.
- Minimization of Scrubber Water - The JSC facility should maximize the air to water ratio in the scrubber unit in order to minimize water use necessary for this unit to operate effectively.

2. Saponification

- Reactor Optimization - The saponification reaction temperature should be optimized to avoid line blockages and unnecessary product wasting during cleaning (unblocking) operations.
- Leak Control - The equipment in the saponification plant should be maintained more rigorously to reduce steam leaks. This will reduce discharge of contaminated condensate, and reduce the need for boiler make-up water.
- Production Schedule Optimization - The production schedule should be modified and optimized to prevent frequent changes of products and reduce start-up losses.

3. Sodium Silicate Production

- Elimination or Minimization of Contact Cooling - The JSC facility should investigate the opportunity for using non-contact cooling water, or minimizing cooling water use, for the casting belt. This would eliminate the discharge of contaminated cooling water, and reduce the need for make-up water.
- Sediment/Filter Solids Control - The JSC facility should investigate possible ways to minimize sediment in the dissolved sodium silicate storage tanks. Methods to reduce sediment generation could include:

- Increase the purity of its raw materials;
- Optimize the operation of the kiln; and
- Optimize the dissolving conditions in the autoclave.

- Dust Control - The JSC facility should implement additional dust control measures to reduce opportunities for worker exposure to silica dust.
- Maximization of Cooling Water Reuse - The JSC facility should maximize its use of the casting belt cooling water for dissolution of rock sodium silicate.

4. Sodium Toluene Sulfonate Production

- Elimination of Toluene Discharge - Water remaining following separation of toluene from the toluene/water mixture, should be stored and fully reused in the process in lieu of discharge to the collection basin. Storage and reuse efforts may require construction of an additional storage tank in the STS facility. Alternatively, the water contaminated with toluene could be treated by activated carbon, air stripping, or other means, and reused, or in some way segregated from other plant discharges.
- STS Cooling Water Segregation - The use of the central cooling water system for the STS plant could be eliminated by constructing an STS specific cooling system. Additionally, a toluene leak detection system could be installed to minimize the loss of toluene to the cooling circuit. This practice would eliminate the discharge of contaminated cooling water to the basin, and would reduce the need for cooling system make-up water.
- Leak Control - The equipment in the STS plant should be maintained more rigorously to reduce or eliminate possibilities for the cooling water and steam to become contaminated by toluene due to leaks.
- Dryer Condensate Reuse - The JSC facility could investigate possible in-plant uses, such as equipment or floor cleaning, for the condensed vapors from the STS drying unit.

5. Alkanolamides Production

- Elimination of Pasty Waste Discharge - The JSC facility should ensure that all of the pasty wastes generated at the plant are drummed, and not discharged to basin.

7.2.2 Materials Handling and Storage

During the audit site visit, the audit team noted a variety of materials handling and storage practices at the JSC facility that could result in the discharge of pollutants to the wadi during a storm event. The following PP/WM and water conservation opportunities were identified by the audit team to address these findings.

1. Concrete loading and unloading areas should be constructed utilizing containment berms and rain covers to isolate spills, prevent soil contamination, and eliminate stormwater runoff.
2. Drummed and bagged raw materials, intermediates, products and wastes should be stored in covered areas with concrete floors and spill containment berms.
3. The drainage hole cut in the wall of the sulfur melting room should be sealed.

59

4. Leaks and spills throughout the JSC facility should be removed by absorbent materials or other dry cleaning methods and not rinsed to the collection basin. In addition, where barrels are used to collect overflow from process units, these collection vessels should be replaced more frequently to ensure they do not overflow to the collection basin.
5. Containment structures constructed to prevent spills from reaching bare ground or the wadi should be repaired and maintained to ensure their proper operation. Where drains are located in these containment structures, they should be closed under normal circumstances, and opened only to remove uncontaminated stormwater or washwater.
6. Tanker truck and barrel washing should be performed off site at a suitable location, or within an area of the JSC facility designed to contain truck and barrel washing discharges.

7.2.3 Control of Other Waste Generating Activities

The audit team identified several additional PP/WM and water conservation actions that did not relate directly to process operations, or to the handling and storage of materials. Opportunities in these specific areas are provided in the following sections.

1. Solid and Drummed Wastes

- Utilization of Sulfur Wastes - The JSC facility should promote the use by outside firms of the solid sulfur waste generated by the sulfonation process.
- Utilization of Charred Material - The JSC facility should investigate the re-introduction of additional charred material, generated in the sulfonation reactor and removed by the cyclone, to the final product.

- Utilization of Sodium Silicate Sediment - The JSC facility should investigate alternative uses for the sediment collected in the dissolved sodium silicate storage tanks, and for the solids removed from the plate filters used to remove impurities during transfer from the storage tanks to the final product tank.
- Utilization of Sodium Sulfate Wastes - The JSC facility should investigate the use by other companies of the waste sodium sulfate generated by the STS process. Additionally, the process should be optimized to reduce the generation of this material to the extent possible.

2. Utilities Wastes

- Utilization of RO Reject - RO reject and membrane filter water should be removed from use in irrigation of adjacent farm land. The reject water should instead be evaporated, or treated, to prevent TDS contamination of soil.
- Utilization of Recovered Fuel Oil - The JSC facility should revise boiler maintenance procedures to prevent the discharge of waste fuel oil to the waste collection basin. Alternatively, an oil water separator should be installed prior to the waste collection basin to prevent waste fuel oil from contaminating the basin.
- Leak and Spill Prevention - Leaks and spills throughout the JSC facility should be minimized to reduce contamination of the centralized cooling and steam systems.
- Domestic Waste Treatment - The JSC facility should construct an engineered septic tank with a suitable leach field to treat the domestic wastes generated by the facility.

- Pre-treatment of Cooling Water - The JSC facility should use RO water or softened water for cooling water make-up. Use of treated water would decrease blowdown frequency and reduce the need for make-up water.
- Reduction of Steam Losses - The JSC facility should provide additional maintenance to prevent steam leaks. Steam losses account for a substantial portion of total water consumption at the JSC facility.
- Maximization of Heat Recovery - All means should be investigated for heat recovery prior to release of any waste gases/steam to the atmosphere. This may result in conservation of energy and reduce water consumption through the need for less make-up water for steam generation.
- Replace Wet Cleaning with Dry Cleaning Methods - The JSC facility should use absorbent materials and brooms for cleaning wherever possible. In addition, low pressure hoses should by replaced by a high pressure system.
- Truck Cleaning - The JSC facility should provide additional draining of product prior to washing tankers, and use a high pressure washing system to reduce water use.

3. Waste Collection Basin

- Optimize Operation of the Collection Basin - The JSC facility should carefully study the operation of the waste collection basin to ensure that wastewater does not leak or drain from the basin to the ground or to the wadi.
- Prevent Seepage from the Collection Basin - The JSC facility should evaluate the possible migration of wastewater from the basin to the soil and groundwater. To perform the evaluation, monitoring wells could be constructed near the basin to determine if leakage has occurred, and if so, the extent of the migration.

8.0

FOLLOW-UP ACTIONS

8.0 FOLLOW-UP ACTIONS

To ensure the success of a PP/WM or water conservation project, a facility implementing specific actions must follow-up on these actions to ensure that the goals of the project are achieved. It is imperative, therefore, that the JSC facility follow-up implementation of any of the recommendations of this report with activities such as increased monitoring of water use and disposal, ongoing maintenance and upkeep of new equipment, and conduct of periodic training and instruction for management and production line staff.

Increased monitoring of water use and disposal is particularly important for the JSC facility due to the current lack of data in these areas. Specifically, the JSC facility should begin routine monitoring of key water usage activities and wastewater discharge streams, including the wastewater collection basin. This will assist the facility in more accurately targeting areas of concern, and will provide baseline data for overall plant performance. In addition, prior to initiating specific PP/WM activities, JSC should evaluate the baseline characteristics of the wastestream (or water consumption activity) to be corrected. This baseline data can then be used to measure the initial success of the PP/WM or water conservation technique, and can also be used to ensure that the technique continues to perform successfully over time.

With respect to the PP/WM and water conservation techniques recommended in Section 7.0, the JSC facility should follow-up on all of the elements that it determines are productive. Implementation of these recommendations will reduce water consumption, pollutant loadings, and may result in the recovery of additional by-products. In particular, the JSC facility should follow-up on the following recommendations:

PP/WM Recommendations

1. Materials Handling and Storage - During the audit site visit, the audit team noted a variety of materials handling and storage practices at the JSC facility that could result in the discharge of pollutants to the wadi during a storm event, or which could contaminate surrounding soils. The JSC facility indicated that several large hangers would soon be constructed and used for materials storage. The JSC facility should review all current practices for materials handling and storage in order to minimize impact to the wadi.

2. Operation of the Waste Collection Basin - The waste collection basin operated by JSC should be fully evaluated to fully assess influent and effluent flows. In particular, monitoring of influent flow should be evaluated fully in order to perform a proper flow balance. Possible leakage from the basin should also be evaluated by the installation of one or more sampling wells. Additionally, the JSC facility should follow-up this evaluation with an assessment of the need for treatment of the basin wastes. This assessment should also evaluate the need to treat process wastewater and stormwater runoff that are currently discharged directly to the wadi during a storm event.

3. Segregation of STS Plant Wastes - Current practices at the STS plant result in the discharge of toluene to the waste collection basin. Several recommendations were provided in Section 7.0 to reduce or segregate the discharge.

Water Conservation Recommendations

1. Elimination of Contact Cooling for Casting Belt - Contact cooling of casting belt should be replaced, if possible, by a non-contact system. Current practice results in evaporative loss of about 7 m^3/day and a discharge to the collection basin of about 7 m^3/day (approximately 16 percent of total facility consumption). Assuming that a non-contact system would reduce this by approximately 75 percent, this would save 11 m^3/day, or about 12 percent of the total water consumed at the JSC facility.

2. Reduction of Steam Losses - The JSC facility could provide additional maintenance to prevent steam leaks. Evaporative losses are estimated to be approximately 33 m^3/day throughout the facility. Assuming a 15 percent reduction due to improved maintenance, a savings of 5 m^3/day would be anticipated.

3. Optimization of Water Use - Optimization of water use should be practiced for all process operations. Optimization could include slowly reducing water use at a given unit process until negative impacts are observed. Water use would then be maintained at the minimum effective flow rate.

4. Reduce Spills - Elimination of spills will reduce the need for washwater.

Where new equipment or processes are implemented to achieve a PP/WM or water conservation objective, the JSC facility should provide ongoing maintenance and upkeep of this equipment. The success of any PP/WM project can be compromised if new equipment falls into disrepair, or if new processes are not correctly applied. Establishment of a long term maintenance schedule will help to ensure successful operation.

No PP/WM program will be successful if employees are not aware of the program goals and trained to effectively implement these goals. Employee training should include periodic refresher courses regarding the JSC facility's PP/WM and water conservation policies and procedures and proper training in the use of new equipment or practices. Staff should also have the opportunity to provide input regarding additional PP/WM or water conservation activities and should be provided with incentives for program successes.

To ensure that JSC management are kept updated on "state-of-the-art" technologies, the Ministry of Water and Irrigation and the Chamber of Industry should be consulted on a regular basis. Periodic site visits should be arranged for Ministry and Chamber staff so that they might provide additional input and suggestions.

TABLES

Table 1 - Products Manufactured at the JSC Facility

Product	Composition	Manufacturing Process	Production Capacity
FAZonic HA01	Branched Sulfonic Acid	Sulfonation Plant - Continuous Process	22 tons/day
FAKZonic SA02	Linear Sulfonic Acid	Sulfonation Plant - Continuous Process	22 tons/day
FAKZonate HN03500	Dodecylbenzene Sulphonate, Sodium Salt	Sulfonation Plant - Continuous Process	35 tons/day
FAKZonate 2LEN0570	Sodium Lauryl Ether Sulfate	Sulfonation Plant - Continuous Process	25 tons/day
FAKZicate RNS07	Neutral Rock Sodium Silicate	Sodium Silicate - Melting Plant	ND
FAKZicate RAS 06	Alkaline Rock Sodium Silicate	Sodium Silicate - Melting Plant	ND
FAKZicate LAS	Alkaline Liquid Sodium Silicate	Sodium Silicate - Dissolution Plant	ND
FAKZicate LNS 10	Neutral Liquid Sodium Silicate	Sodium Silicate - Dissolution Plant	ND
FAKZid CD21	Coconut Diethanol Amide	Alkanolamides Plant	ND
FAKZid CM22	Coconut Monoethanol Amide	Alkanolamides Plant	ND
FAKZonate ST 23	Sodium Toluene Sulfonate	Sodium Toluene Sulfonate Plant	ND
Soap	Soap Noodles	Saponification	ND

"ND" = Not Determined
Source: JSC Product Brochure

Table 2 - Wastewater Discharges to the Waste Collection Basin

Wastewater Generating Process	Discharge Volume (m^3/day)[a]	Percent of Total Flow to Basin
Sulfonation/Sulfation Plant	8.59	31.5
Sodium Silicate Melting Plant	7.33	26.9
Sodium Silicate Dissolution Plant	2.6	9.5
STS Production Plant	1.3	4.8
Alkanolamides Plant	0.15	0.6
Saponification Plant	1.74	6.4
Cooling and Boiler Systems	2.03	7.4
Water Softening System	1.62	5.9
RO System	1.1	4.0
Tanker Truck Cleaning	0.8	2.9
Total	**27.26**	**100**

[a] Based on information provided by the JSC Technical Manager

Table 3 - Waste Collection Basin Sampling Results

Parameter	202 Standards (mg/l)	Waste Collection Basin[a] (mg/l)
BOD5	50[b]	3,544
COD	150[b]	6,856
TSS	50	455
TDS	3,000[c]	9,277
TKN	NA	17.5
SO_4	500	88.4
ABS	25	3,200
Toluene	NA	0.45

[a] Supernatant from basin collected on September 25, 1994.
[b] Monthly Average.
[c] TDS limit is subject to the TDS concentration in the water supply and the water basin affected.

Table 4 - Water Consumption at the JSC Facility [a,b]

Location of Water Use	Tanker Water (m^3/day)	Well Water (m^3/day)
All Process Water	38.9	38.9
Boiler Make-Up	36	36
Boiler Cleaning	0.8	0.8
Softener Regeneration	1.6	1.6
Cooling Tower Make-Up	6	6
Tanker Truck Cleaning	0.8	0.8
Domestic	3	3
Irrigation	2	2
RO Reject	-	21.3
Membrane Washing	-	1
RO Filter Backwash and Sediment Flushing	-	0.7
Storage Tank Flushing	-	0.4
Totals	89.1	112.5

[a] Based on information provided by the JSC Technical Manager
[b] Water consumption is based on <u>either</u> on tanker truck, or well water as the water source

Table 5 - Potential Water Savings for the JSC Facility

Production Operation	Water Conservation Technique	Current Water Consumption (m^3/day)	Projected Water Consumption (m^3/day)	Projected Water Savings (m^3/day)	Percent Decrease in Total Water Consumption
Sulfonation	Leak Prevention	0.12	0.06	0.06	0.07
Sulfonation	Elimination of Contact Cooling of Sulfur Pumps	0.1	0.0	0.1	0.1
Saponification	Leak Prevention/ Condensate Reuse	1.0	0.3	0.7	0.8
Sodium Silicate	Elimination of Contact Cooling for Casting Belt	14.0	3.5	10.5	11.7
STS	Process Water Reuse	0.07	0.0	0.07	0.08
STS	Cooling Water Segregation	2.4	0.0	2.4	2.7
STS	Dryer Condensate Reuse	0.2	0.0	0.2	0.2
Cooling System	Pretreatment of Cooling Water	1.0	0.3	0.7	0.8
Steam System	Reduction of Steam Leaks	33.0	28.0	5.0	5.6
Maintenance	Use of Additional Dry Cleaning Methods	2.0	1.7	0.3	0.3
Truck Washing	Additional draining and Pressure Hoses	0.4	0.4	0.4	0.4
Total Savings	-	-	-	20.4	22.7

FIGURES

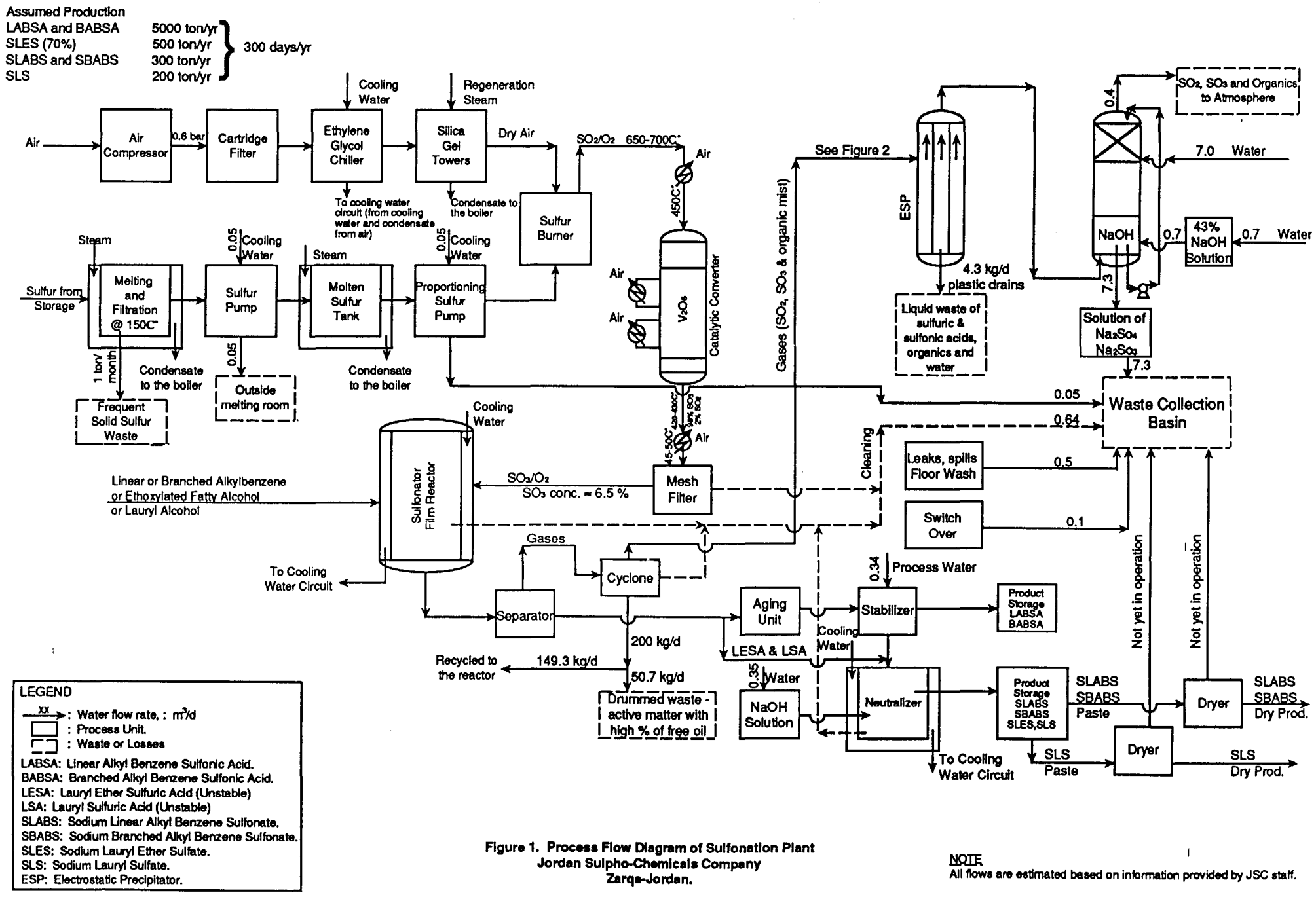

Figure 1. Process Flow Diagram of Sulfonation Plant
Jordan Sulpho-Chemicals Company
Zarqa-Jordan.

NOTE
All flows are estimated based on information provided by JSC staff.

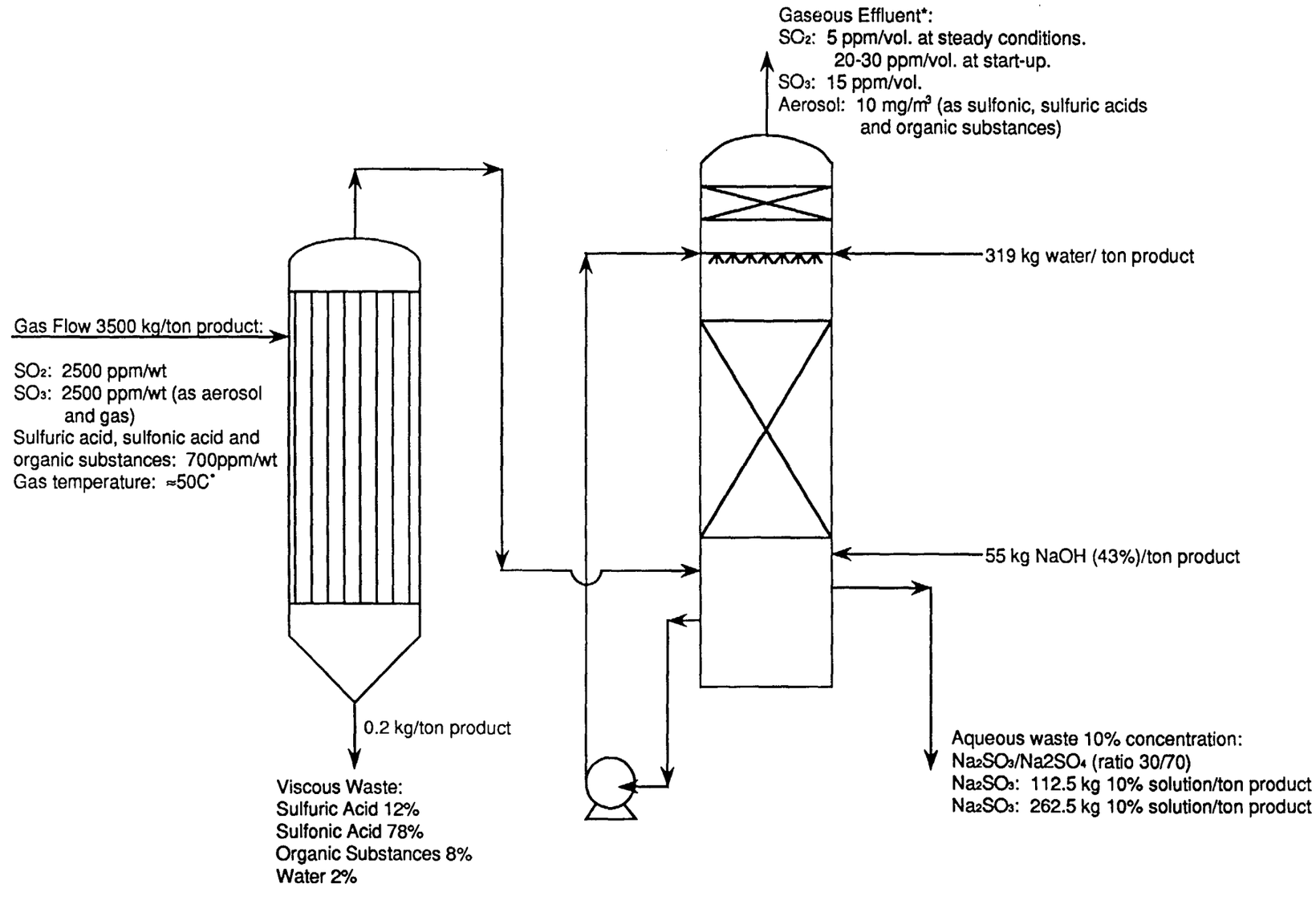

NOTE:
*Information from the unit supplier, no gas monitoring.

Figure 2. Sulfonation Exhaust Gas Treatment Unit Jordan Sulpho-Chemicals Company (JSC). Zarqa, Jordan

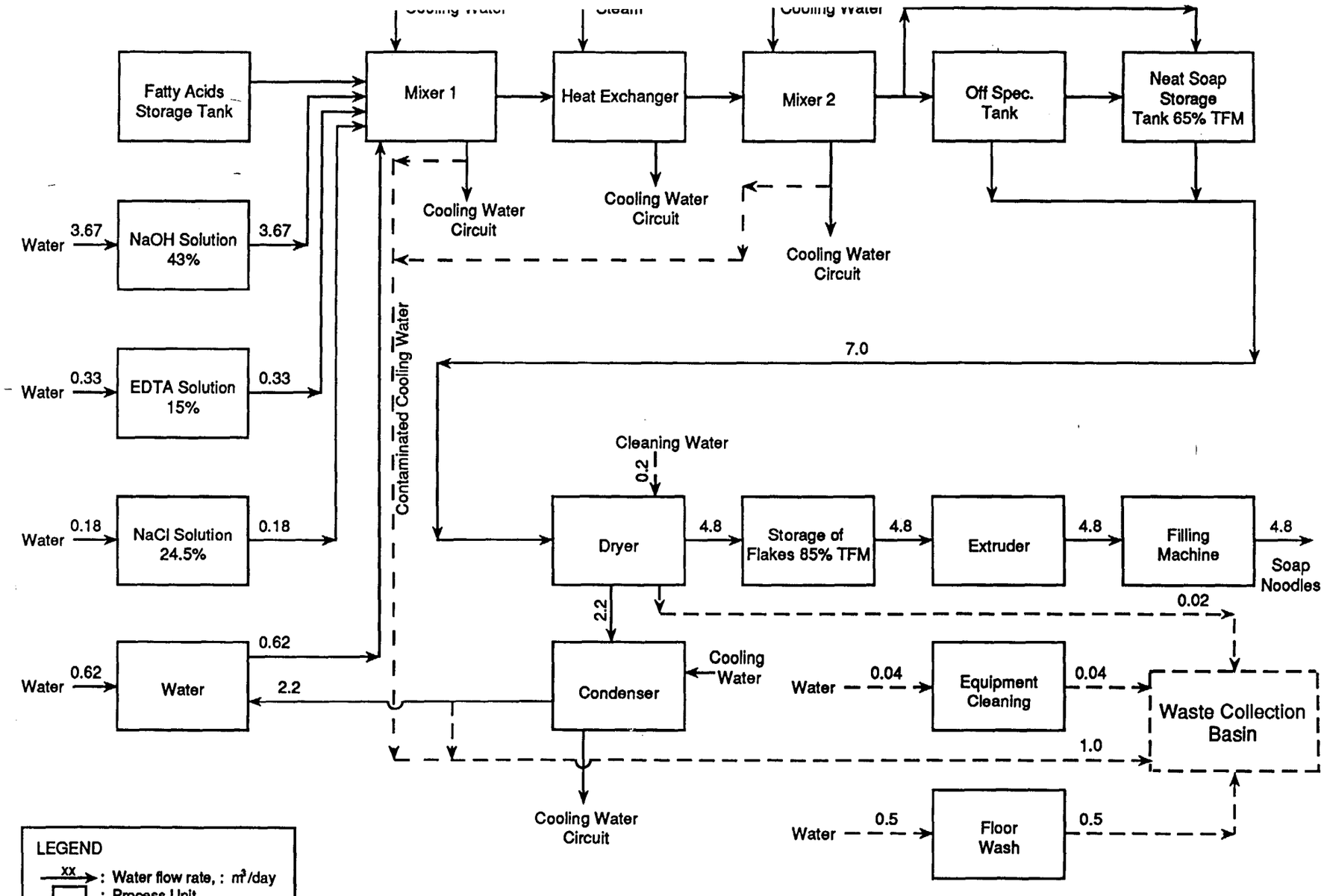

Figure 3. Process Flow Diagram of Saponification Plant Jordan Sulpho-Chemicals Company (JSC) Zarqa-Jordan.

NOTES
- All flows are estimated based on information provided by JSC staff.
- Basis: 7000 ton/yr of product, 300 days/yr

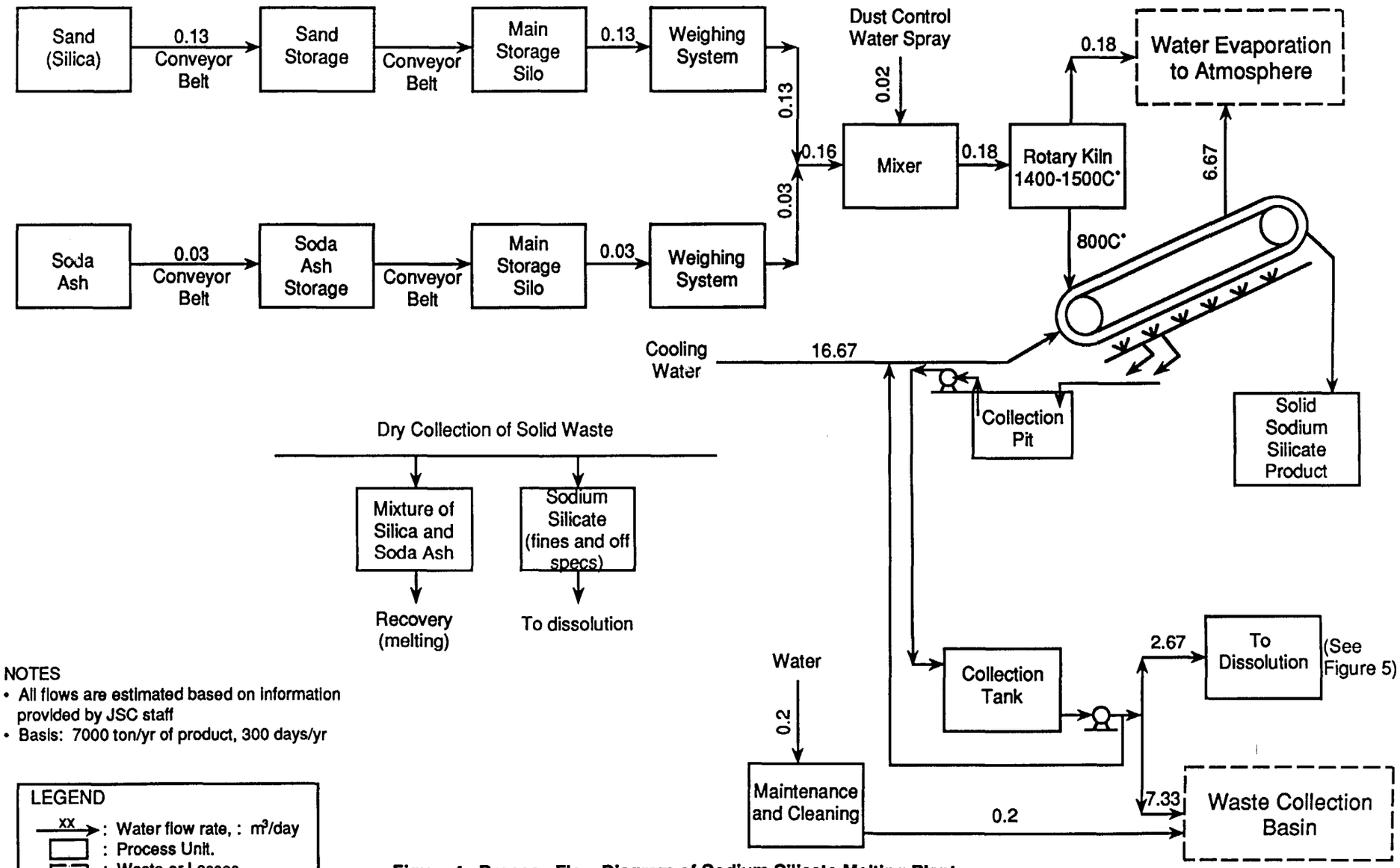

Figure 4. Process Flow Diagram of Sodium Silicate Melting Plant Jordan Sulpho-Chemicals Company (JSC) Zarqa-Jordan.

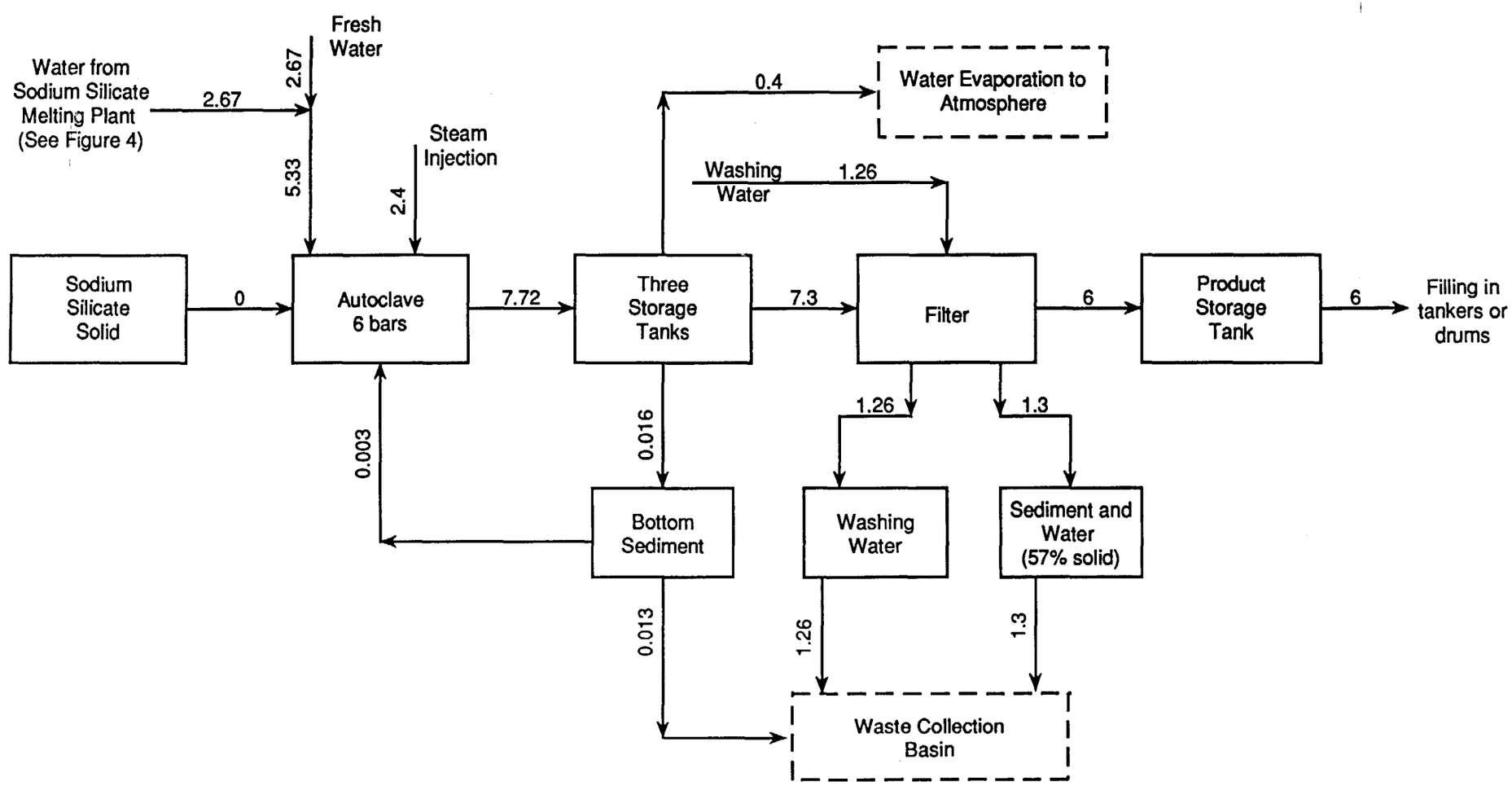

NOTES
- All flows are estimated based on information provided by JSC staff
- Basis: 7000 ton/yr of product, 300 days/yr

LEGEND
xx → : Water flow rate, : m^3/day
: Process Unit.
: Waste or Losses

Figure 5. Process Flow Diagram of Sodium Silicate Dissolution Plant Jordan Sulpho-Chemicals Company Zarqa-Jordan.

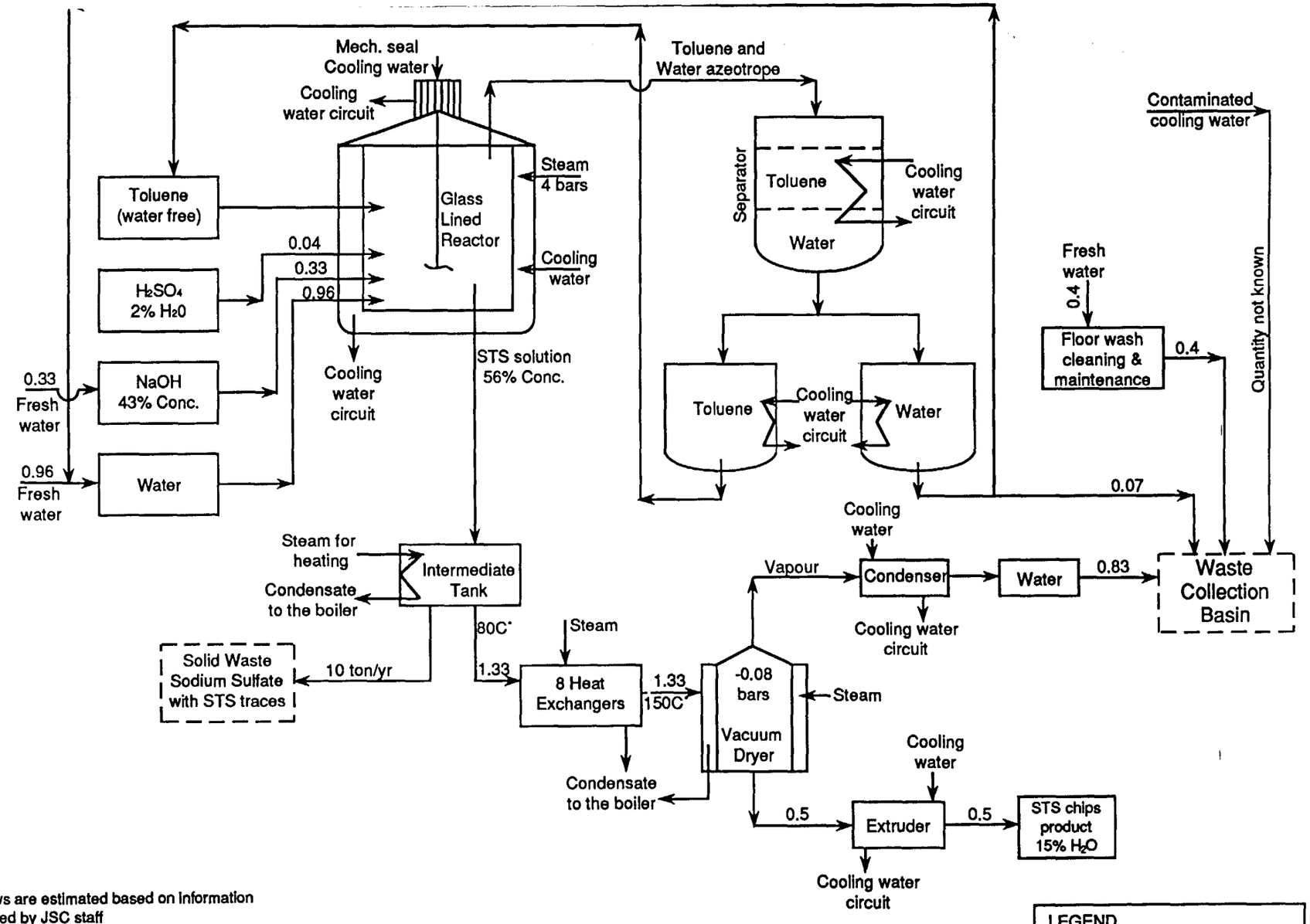

NOTES
- All flows are estimated based on information provided by JSC staff
- Basis: 7000 ton/yr of product, 300 days/yr

LEGEND
- xx → : Water flow rate, : m^3/day
- ▭ : Process Unit.
- ⬚ : Waste or Losses

Figure 6. Process Flow Diagram of Sodium Toluene Sulfonate (STS) Production
Jordan Sulpho-Chemicals Company
Zarqa-Jordan.

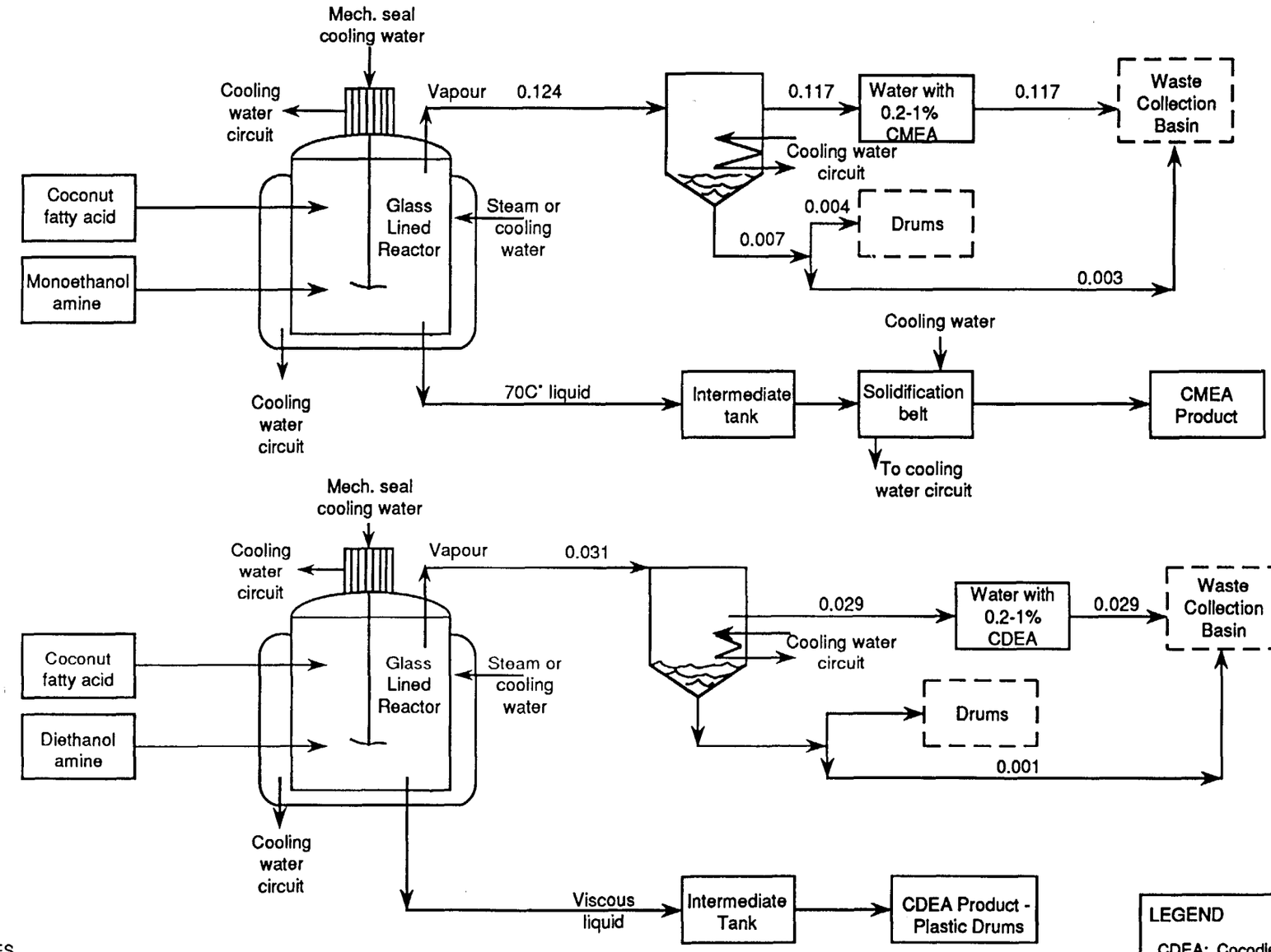

NOTES
- All flows are estimated based on information provided by JSC staff
- Basis: CMEA production 500 ton/yr.
  CDEA production 125 ton/yr.

Figure 7. Process Flow Diagram of Alkanolamides Production Jordan Sulpho-Chemicals Company (JSC) Zarqa-Jordan.

LEGEND
CDEA: Cocodiethanolamide
CMEA: Cocomonotheanolamide
xx → : Water flow rate, : m^3/day
: Process Unit.
: Waste or Losses

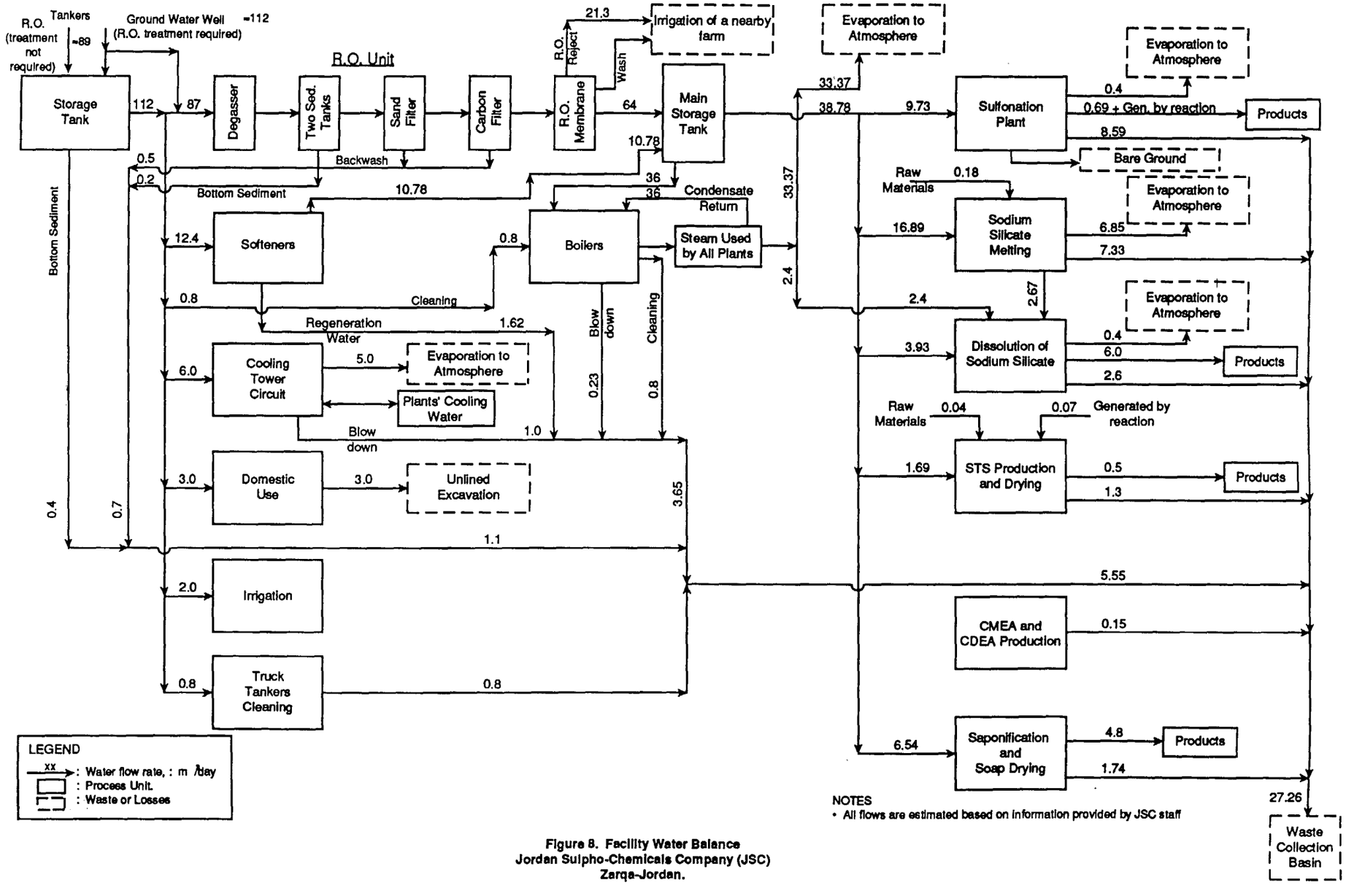

NOTES
• All flows are estimated based on information provided by JSC staff

Figure 8. Facility Water Balance
Jordan Sulpho-Chemicals Company (JSC)
Zarqa-Jordan.

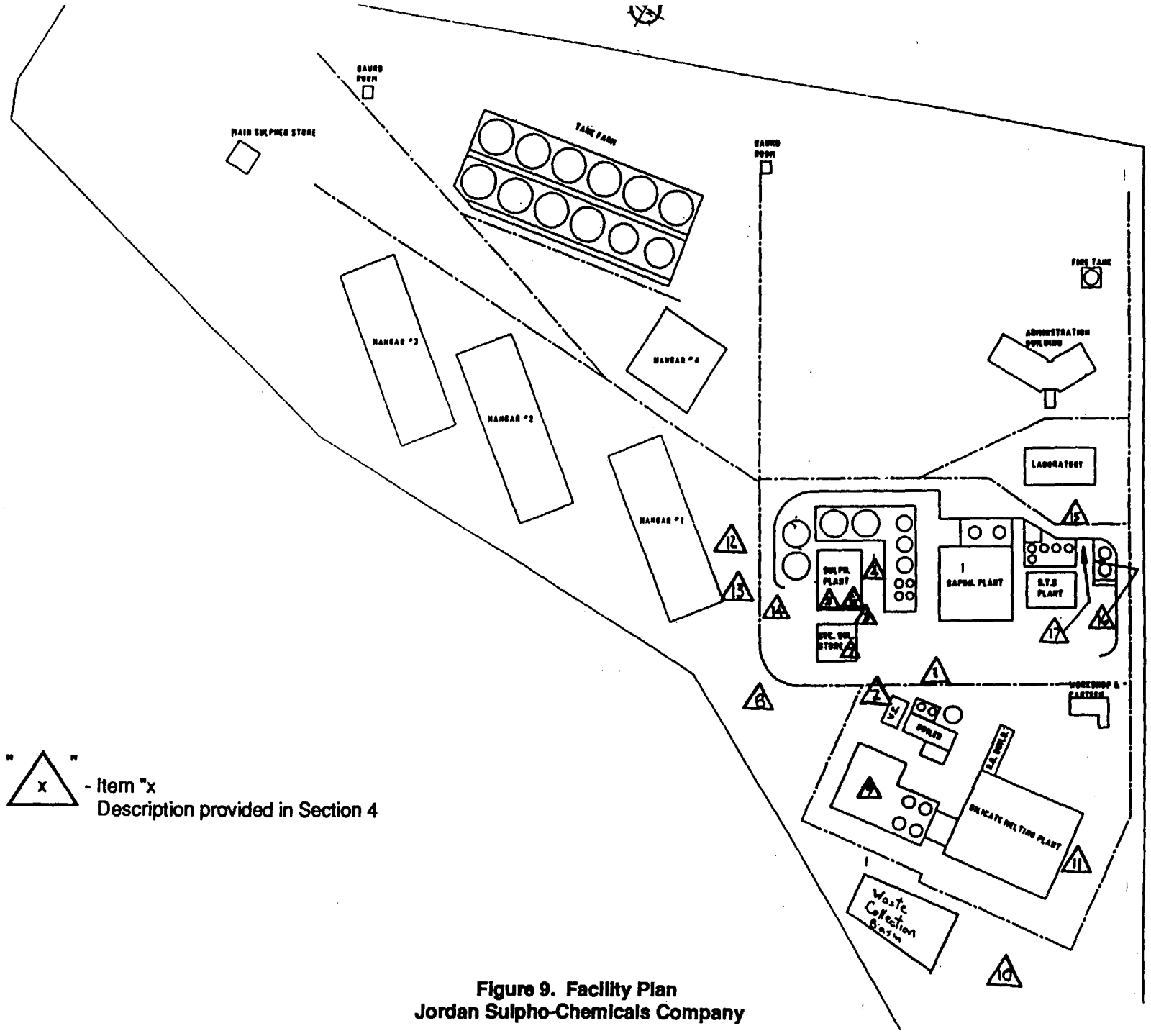

Figure 9. Facility Plan
Jordan Sulpho-Chemicals Company

Appendix A

Audit Questionnaire

WQICP WASTE MINIMIZATION AUDIT
Facility Name: Jordan Sulpho-Chemicals Auditor/Firm: SAIC / RSS
Date: 9/20/1994

ATTACHMENT A
AUDIT QUESTIONAIRE

SITE DESCRIPTION

Facility Name: Jordan Sulphochemicals
Area:

Address: Wadi Al-ush Zerka. "P.O. Box 811643 - Amman"
Telephone: 09-991434 / 09-991435

Major Products: Raw materials for detergents.

Production Rate:
SIC Codes:

Major Sources of Wastewater Discharges:
- R.O Reject - Domestic wastewater.
- Industrial wastewater effluent originating from various production units of JSC including blowdowns, softeners regeneration and filters' backwash

Major Processes:
Sulfonation, sulfation, neutralization, amidation, sodium silicate melting, sodium silicate dissolution and saponification

Facility/Equipment Age: 11 years, except drying and saponification unit 1 year.

92

WQICP WASTE MINIMIZATION AUDIT

Facility Name: Jordan Sulpho-Chemicals Auditor/Firm: SAIC/ RSS

Date: 9/20/1994

PROCESS INFORMATION

Operation Type*: -- Continuous -- Discrete

-- Batch or Semi-Batch -- Other_____

Document	Complete? (Y/N)	Current? (Y/N)	Document Number
Process Flow Diagram	Y	Y	
Material/Energy Balance	Y*	Y*	
Design	Y*	Y*	
Operating	Y*	Y*	
Flow/Amount Measurements+	+	+	
Stream			
Analyses/Assays	Y+	Y+	
Stream			
Plant Layout	Y	Y	
Process Description	Y	Y	
Operating Manuals	Y*	Y*	
Equipment List/Age	Y*	Y*	
Equipment Specifications	Y*	Y*	
Piping & Instrument Diagrams	Y	Y	
Plot and Elevation Plan(s)	Y*	Y*	
Environmental Audit Report	N.A	N.A	
Permit/Permit applications	N.A	N.A	
Raw Material Inventory Records	Y*	Y*	
Product Inventory Records	Y*	Y*	
Management method practiced for each wastewater stream	N	N	
Wastewater treatment facilities	N	N	
Waste management practice	N	N	
Ancillary facilities	Y	Y	
Annual cost for management of the wastewater discharge	N.A	N.A	
Photographic records during construction.	Y	Y	

* Sulfonation / Sulfation plant : Continuous.
Saponification: Discrete.
Sodium Silicate melting, Sodium silicate dissolution and Alkanolamide : Batch.

Y*: The company has it, but was not made available to the audit team.

+: Flow/Amount of raw materials is usually measured but water and wastewater flow/amount is not usually measured.

Y+: Products analyses and boiler and cooling water analyses.

N.A: Not Applicable.

WQICP WASTE MINIMIZATION AUDIT

Facility Name: Jordan Sulpho-Chemicals Auditor/Firm: SAIC / RSS

Date: 9/20/1994

INPUT MATERIALS SUMMARY*

Material	DESCRIPTION[1]		
	Stream No.	Stream No.	Stream No.
Name			
Source/Supplier			
Component of Concern			
Annual Consumption Rate			
Overall			
Component(s) of Concern			
Purchase Price, $ per			
Overall Annual Cost			
Delivery Mode[2]			
Shipping Container Size & Type[3]			
Storage Mode[4]			
Transfer Mode[5]			
Empty Container Disposal/Management			
Shelf Life			
Supplier Would			
- accept expired material (Y/N)			
- accept shipping containers (Y/N)			
Acceptable Substitute(s), if any			
Alternate Supplier(s)			
Product Inventory Records			

1. Stream number, if applicable, should correspond to those used on process flow diagram
2. e.g., pipeline, tank truck, etc.
3. e.g., drum, paper bag, tank, etc.
4. e.g., outdoor, warehouse, underground, aboveground, etc.
5. e.g., pump, forklift, conveyor, etc.
6. e.g., crush and dump, clean and recycle, return to supplier, etc.

* The following table shows the available information

Raw Material	Other Information	Raw Material	Other Information
Elemental Sulfur.	Packing: 50 Kg bags	Soda Ash	Bags
Dodecyl benzene.	N.A	Silica	Bulk by trucks
Branched benzene.	N.A	Soap Blends of Fatty Acids	Bulk or iron drums
Fatty Alcohol	N.A	EDTA	Bags
Lauryl Alcohol	N.A	Nacl	25 Kg polythene bags
Palm Oil Fatty Acid	Bulk or iron drums	Fuel Oil	Bulk by tankers,
Coconut Oil Fatty Acid	Bulk or iron drums		Consumption 100 ton/month
Methyl Ester	N.A		Price 65 JD/ton
Mono Ethanol Amine	N.A		

[redacted]

WQICP WASTE MINIMIZATION AUDIT

Facility Name: Jordan Sulpho-Chemicals Auditor/Firm: SAIC/RSS

Date: 9/20/1994

INDIVIDUAL WASTE STREAM CHARACTERIZATION

(page 1 of 4)

1. Waste Stream Name/ID: R.O. Reject Stream No. _____

2. Waste Characterization (attach additional sheets with composition data, as necessary)

   --- Gas ✓ Liquid --- Solid --- Mixed phase

   Density kg/M³ _____ High Heating Value Cal/kg _____
   pH _____ Flash Point _____ % Water _____

3. Waste Leaves Process as:

   -- air emission ✓ wastewater -- solid waste

4. Occurrence:
   ✓ continuous
   -- discrete
   discharge triggered by -- chemical analysis _____
   -- other (describe) _____

   Type -- periodic _____ length of period _____
   -- sporadic

5. Generation Rate:

Annual	6390	m^3	~~kg~~ per year
Maximum	25	m^3	~~kg~~ per day
Average	21	m^3	~~kg~~ per day
Frequency			batches per _____

Batch Size _____ average _____ range

85

WQICP WASTE MINIMIZATION AUDIT

Facility Name: Jordan Sulpho-Chemicals Auditor/Firm: SAIC / RSS

Date: 9/20/1994

INDIVIDUAL WASTE STREAM CHARACTERIZATION

6. Waste Origins/Sources

Fill out this worksheet to identify the origin of the waste. If the waste is a mixture of waste streams, fill out a sheet for each of the individual waste streams.

Is the waste mixed with other wastes? ---- Yes ✓--- No

Describe how the waste is generated.

The facility groundwater well has a high TDS. R.O unit is used to treat this water prior to be used in steam generation and other uses. The R.O Reject Stream is produced from the R.O unit

Example: Formation and removal of an undesirable compound, removal of an unconverted input material, depletion of a key component, equipment cleaning waste, obsolete input material, spoiled batch and production run, spill or leak cleanup, evaporative loss, venting losses, etc.

WQICP WASTE MINIMIZATION AUDIT
Facility Name: Jordan Sulpho-Chemicals Auditor/Firm: SAIC/RSS
Date: 9/20/1994

INDIVIDUAL WASTE STREAM CHARACTERIZATION
(page 3 of 4)

Waste Stream R.O. Reject

7. Management Method

Leaves site in ✓ bulk
--- 55 gal drum
--- other (describe)

Disposal Frequency Continuous

Applicable Standards/Regs Jordanian Standard 202

Managed --- onsite ✓ offsite
--- other (describe)

Recycling N.A --- direct use/re-use
--- energy recovery
--- redistilled
--- other (describe)

reclaimed material returned to site?

--- Yes --- No --- used by others

residue yield
residue disposal

Treatment N.A --- biological
--- oxidation/reduction
--- pH adjustment
--- precipitation
--- other (describe)

Final Disposition --- Dump
--- pond
✓ other (describe) Used for irrigation by a nearby farm.

N.A : Not Applicable

INDIVIDUAL WASTE STREAM CHARACTERIZATION
(page 4 of 4)

97

WQICP WASTE MINIMIZATION AUDIT

Facility Name: Jordan Sulpho-Chemicals Auditor/Firm: SAIC / RSS

Date: 9/20/1994

cost as of N.A (quarter and year)

Cost Element	Unit Price JD per ____	Reference/Source
Onsite Storage & Handling		
Pretreatment		
Container		
Transportation Fee		
Disposal Fee		
Taxes		
Total disposal Cost		

N.A : Not Applicable

WQICP WASTE MINIMIZATION AUDIT

Facility Name: Jordan Sulpho-Chemicals Auditor/Firm: SAIC / RSS

Date: 9/20/1994

WASTE STREAM INFORMATION

(one form for each stream)

Stream ID: _____

1. Streamname: R.O. Reject
   (wastewater, waste oil, still bottoms, etc.)

2. Discharge Identification: R.O. Unit
   (Enter process or equipment from which stream is discharged)

3. Stream flow/quality:

   minimum flow: _____ L/min
   maximum flow: _____ L/min
   average flow: 21 ~~L/min~~ m^3/d

4. Is stream continuous orintermittent? Continuous.

5. Which of following is the cause of the waste?

   a. Process chemistry = (Reaction stoichiometry, kinetic, yield).
      Describe: _____

   b. Engineering Design (capacity, pressure, temperature limitations, etc.). Describe: _____

   c. Operations = (operating rates, order of addition, etc.) Describe:
      The R.O Reject Stream is separated since it has a high TDS value.

   d. Maintenance = (leaks, spills, corrosion, etc.)
      Describe: _____

6. Are the components of the waste stream a raw material (RM), product (P), useful byproduct (UPB), nonuseful byproduct (NBP), solvent (S), catalyst (C), or an impurity (I) in the raw material?

   (Attach analysis records if possible)

   Fill out attached Figure 1 for each waste stream

WQICP WASTE MINIMIZATION AUDIT

Facility Name: Jordan Sulpho-chemicals Auditor/Firm: SAIC / RSS

Date: 9/20/1994

Component Name	Conc (mg/L)	Check One						
		RM	P	UBP	NBP	S	C	I

7. Waste stream characteristics -- pH: N.K TSS: ____ TDS: ____
Color: ____ Hardness: ____ Odor: ____ TOC: ____ Other: ____

8. Current disposition of the stream: ____

9. Current effluent criteria and disposal limitation: ____
Jordanian Standard 202

10. Permits relevant to the waste stream disposition: ____
N.A

11. Current cost of disposal and/or treatment for this waste stream:
N.A

12. If stream is currently being treated, list: No treatment is performed.

a. Current treatment parameters (chemical consumption, treatment conditions, etc.): ____

b. Existing treatment equipment (identify, size and type of equipment): ____

N.K : Not Known. No available analysis
N.A : Not Applicable

WQICP WASTE MINIMIZATION AUDIT

Facility Name: Jordan Sulpho-Chemicals Auditor/Firm: SAIC/RSS

Date: 9/20/1994

Other pertinent information: None

WQICP WASTE MINIMIZATION AUDIT

'acility Name: Jordan Sulpho-Chemicals Auditor/Firm: SAIC/RSS

Date: 9/20/1994

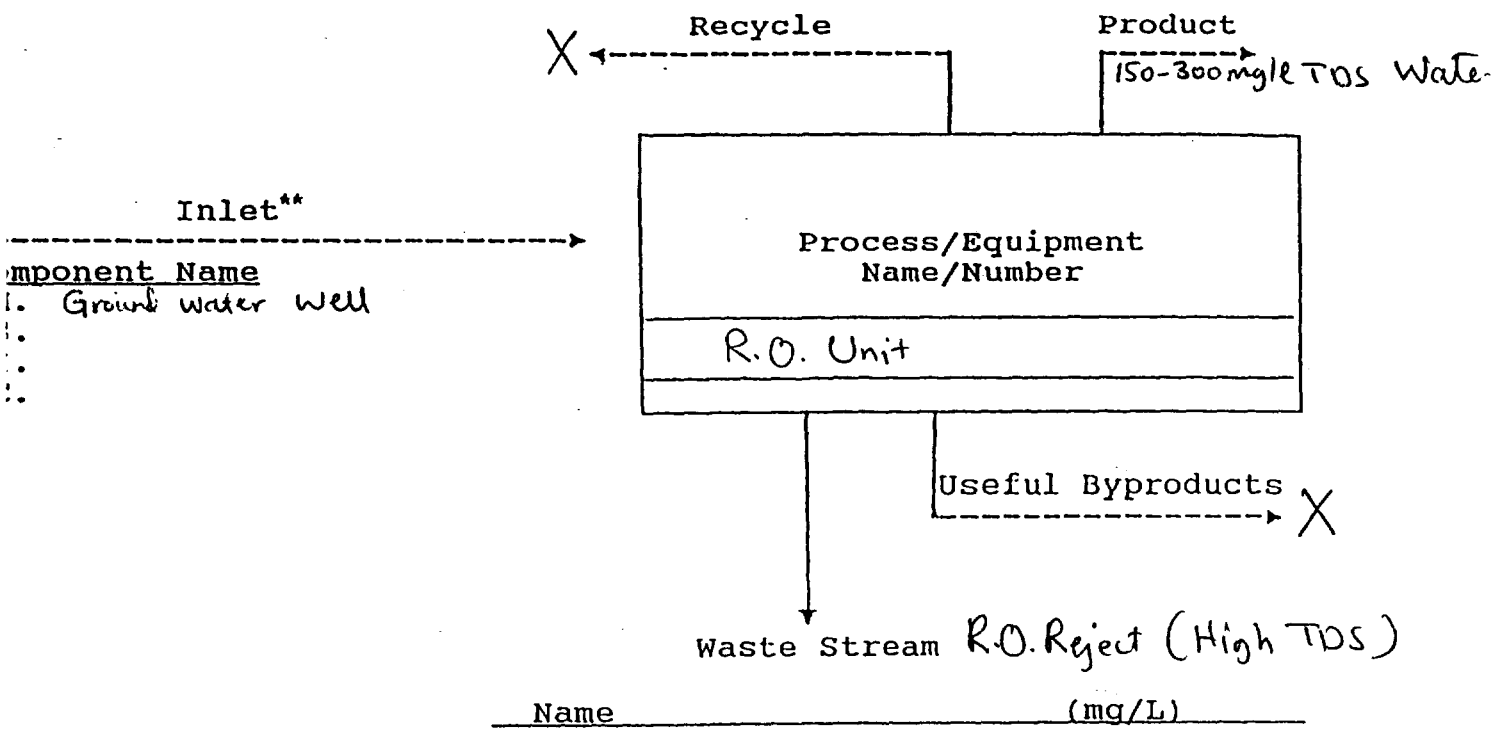

X: Non existance

WQICP WASTE MINIMIZATION AUDIT

Facility Name: Jordan Sulphe-Chemicals Auditor/Firm: SAIC / RSS

Date: 9/20/1994

INDIVIDUAL WASTE STREAM CHARACTERIZATION

(page 1 of 4)

1. Waste Stream Name/ID: Industrial wastewater Stream No. _____

2. Waste Characterization (attach additional sheets with composition data, as necessary)

   --- Gas --✓ Liquid --- Solid --- Mixed phase

   Density kg/M³ _____ High Heating Value Cal/kg _____
   pH _____ Flash Point _____ % Water _____

3. Waste Leaves Process as:

   -- air emission -- wastewater -- solid waste

4. Occurrence:
   ✓-- continuous
   -- discrete
   discharge triggered by -- chemical analysis _____
   -- other (describe) _____

   Type -- periodic _____ length of period _____
   -- sporadic

5. Generation Rate:
   Annual ≈ 8000 m³ ~~kg~~ per year
   Maximum _____ kg per _____
   Average 27 m³ ~~kg~~ per day
   Frequency _____ batches per _____
   Batch Size _____ average _____ range

93

WQICP WASTE MINIMIZATION AUDIT

Facility Name: Jordan Sulpho Chemicals Auditor/Firm: SAIC/RSS

Date: 9/20/1994

INDIVIDUAL WASTE STREAM CHARACTERIZATION

(page 2 of 4)

6. Waste Origins/Sources

Fill out this worksheet to identify the origin of the waste. If the waste is a mixture of waste streams, fill out a sheet for each of the individual waste streams.

Is the waste mixed with other wastes? -✓- Yes ---- No

Describe how the waste is generated.

This wastewater is originating from all production unit and collected in the waste collection basin. It contains process wastewater, wash water, equipment cleaning and switch over and maintenance water. The stream also contains wastewater generated through backwash of sand and carbon filter of R.O unit, cooling circuit and boiler blowdown and truck tankers cleaning. See figure 8 in the text.

Example: Formation and removal of an undesirable compound, removal of an unconverted input material, depletion of a key component, equipment cleaning waste, obsolete input material, spoiled batch and production run, spill or leak cleanup, evaporative loss, venting losses, etc.

94

WQICP WASTE MINIMIZATION AUDIT

Facility Name: Jordan Sulpho-Chemicals Auditor/Firm: SAIC / RSS

Date: 9/20/1994

INDIVIDUAL WASTE STREAM CHARACTERIZATION

(page 3 of 4)

Waste Stream Industrial Wastewater

7. Management Method

Leaves site in
- ✓ bulk
- --- 55 gal drum
- --- other (describe)

Disposal Frequency Continuous

Applicable Standards/Regs 202 Standard

Managed
- --- onsite --- offsite
- ✓ other (describe) Collected in Concreat basin

Recycling N.A
- --- direct use/re-use
- --- energy recovery
- --- redistilled
- --- other (describe)

reclaimed material returned to site?

--- Yes --- No --- used by others

residue yield

residue disposal

Treatment
- --- biological
- --- oxidation/reduction
- --- pH adjustment
- --- precipitation
- --- other (describe)

No treatment is performed.

Final Disposition
- --- Dump
- --- pond
- ✓ other (describe) Concrete basin. Waste water during rain fall to the Wad.

N. A : Not Applicable

INDIVIDUAL WASTE STREAM CHARACTERIZATION

(page 4 of 4)

WQICP WASTE MINIMIZATION AUDIT

Facility Name: Jordan Sulpho-Chemicals Auditor/Firm: SAIC /RSS

Date: 9/20/1994

cost as of N.A (quarter and year)

Cost Element	Unit Price JD per ___	Reference/Source
Onsite Storage & Handling		
Pretreatment		
Container		
Transportation Fee		
Disposal Fee		
Taxes		
Total disposal Cost		

N.A : Not Applicable.

WQICP WASTE MINIMIZATION AUDIT

Facility Name: Jordan Sulpho-Chemicals Auditor/Firm: SAIC / RSS

Date: 9/20/1994

WASTE STREAM INFORMATION

(one form for each stream)

Stream ID: _____

1. Streamname: Industrial Wastewater-
(wastewater, waste oil, still bottoms, etc.)

2. Discharge Identification: All production units and Utilities
(Enter process or equipment from which stream is discharged)

3. Stream flow/quality:

minimum flow: _____ L/min
maximum flow: _____ L/min
average flow: 27 ~~L/min~~ m^3/d

4. Is stream continuous orintermittent? Continuous

5. Which of following is the cause of the waste?

a. Process chemistry = (Reaction stoichiometry, kinetic, yield).
Describe: Wastewater is produced in Sulfonation plant mainly from the scrubber used to clean the effluent gas stream from SO2 gas.

b. Engineering Design (capacity, pressure, temperature limitations, etc.). Describe: Cooling water in Sodium Silicate melting plant is a contact water and hence part of this water should be disposed of.

c. Operations = (operating rates, order of addition, etc.) Describe:

d. Maintenance = (leaks, spills, corrosion, etc.)
Describe: Water is used for leaks and spills wash out and equipment cleaning.

6. Are the components of the waste stream a raw material (RM), product (P), useful byproduct (UPB), nonuseful byproduct (NBP), solvent (S), catalyst (C), or an impurity (I) in the raw material?
For Analysis See table (2) in the text
(Attach analysis records if possible)

Fill out attached Figure 1 for each waste stream

WQICP WASTE MINIMIZATION AUDIT

Facility Name: Jordan Sulpho-Chemicals Auditor/Firm: SAIC / RSS

Date: 9/20/1994

Component Name	Conc (mg/L)	Check One						
		RM	P	UBP	NBP	S	C	I

7. Waste stream characteristics -- pH: ____ TSS: ____ TDS: ____
Color: ____ Hardness: ____ Odor: ____ TOC: ____ Other: ____
See table (2) in the report text

8. Current disposition of the stream: Collection in a concrete basin Some of it is evaporated. During rain fall wastewater is diverted to the nearby wadi.

9. Current effluent criteria and disposal limitation:
Jordanian Standard 202

10. Permits relevant to the waste stream disposition:
Not Applicable

11. Current cost of disposal and/or treatment for this waste stream:
Not Applicable

12. If stream is currently being treated, list: No treatment is performed

a. Current treatment parameters (chemical consumption, treatment conditions, etc.):

b. Existing treatment equipment (identify, size and type of equipment):

WQICP WASTE MINIMIZATION AUDIT

Facility Name: Jordan Sulpho-Chemicals Auditor/Firm: SAIC / RSS

Date: 9/20/1994

Other pertinent information: None

WQICP WASTE MINIMIZATION AUDIT

ıcility Name: Jordan Sulpho-Chemicals Auditor/Firm: SAIC / RSS

Date: 9/20/1994

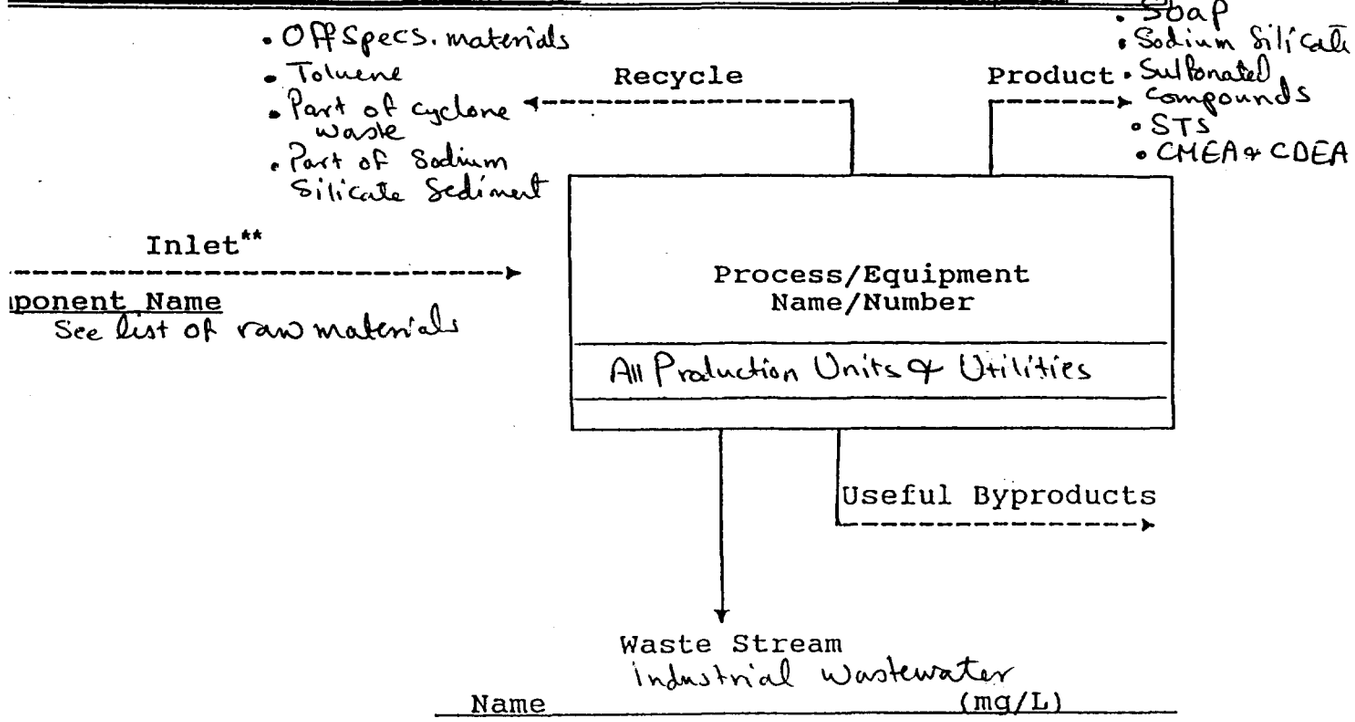

100

WQICP WASTE MINIMIZATION AUDIT

Facility Name: Jordan Sulpho-Chemicals Auditor/Firm: SAIC / RSS

Date: 9/20/1994

INDIVIDUAL WASTE STREAM CHARACTERIZATION

(page 1 of 4)

1. Waste Stream Name/ID: Domestic Wastewater Stream No. _____

2. Waste Characterization (attach additional sheets with composition data, as necessary)

   --- Gas --- ✓ Liquid --- Solid --- Mixed phase

   Density kg/M³ _____ High Heating Value Cal/kg _____
   pH _____ Flash Point _____ % Water _____

3. Waste Leaves Process as:

   -- air emission ✓ wastewater -- solid waste

4. Occurrence:
   ✓ continuous
   -- discrete
   discharge triggered by -- chemical analysis _____
   -- other (describe) _____

   Type -- periodic _____ length of period _____
   -- sporadic

5. Generation Rate:
   Annual 900 m³ ~~kg~~ per year
   Maximum _____ kg per _____
   Average 3 m³ ~~kg~~ per day
   Frequency _____ batches per _____
   Batch Size _____ average _____ range

101

WQICP WASTE MINIMIZATION AUDIT

Facility Name: Jordan Sulpho-Chemicals Auditor/Firm: SAIC/RSS

Date: 9/20/1994

INDIVIDUAL WASTE STREAM CHARACTERIZATION

(page 2 of 4)

6. Waste Origins/Sources

Fill out this worksheet to identify the origin of the waste. If the waste is a mixture of waste streams, fill out a sheet for each of the individual waste streams.

Is the waste mixed with other wastes? ---- Yes ✓--- No

Describe how the waste is generated.

Domestic (sanitary) wastewater is produced from the canteen, washrooms and sinks located throughout the facility.

Example: Formation and removal of an undesirable compound, removal of an unconverted input material, depletion of a key component, equipment cleaning waste, obsolete input material, spoiled batch and production run, spill or leak cleanup, evaporative loss, venting losses, etc.

WQICP WASTE MINIMIZATION AUDIT

Facility Name: Jordan Sulpho-chemicals Auditor/Firm: SAIC / RSS

Date: 9/20/1994

INDIVIDUAL WASTE STREAM CHARACTERIZATION

(page 3 of 4)

Waste Stream Domestic wastewater

7. Management Method

Leaves site in ✓ bulk
--- 55 gal drum
--- other (describe)

Disposal Frequency Continuous

Applicable Standards/Regs Jordanian Standard 893

Managed ✓ onsite --- offsite
--- other (describe)

Recycling N.A
--- direct use/re-use
--- energy recovery
--- redistilled
--- other (describe)

reclaimed material returned to site?

--- Yes --- No --- used by others

residue yield
residue disposal

Treatment
--- biological
--- oxidation/reduction
--- pH adjustment
--- precipitation
--- other (describe)

Final Disposition ✓ Dump Discharged into unlined excavation
--- pond
--- other (describe)

N.A : Not Applicable

INDIVIDUAL WASTE STREAM CHARACTERIZATION

(page 4 of 4)

WQICP WASTE MINIMIZATION AUDIT

Facility Name: Jordan Sulpho-Chemicals Auditor/Firm: SAIC / RSS

Date: 9/20/1994

cost as of N.A (quarter and year)

Cost Element	Unit Price JD per ____	Reference/Source
Onsite Storage & Handling		
Pretreatment		
Container		
Transportation Fee		
Disposal Fee		
Taxes		
Total disposal Cost		

N.A: Not Applicable.

WQICP WASTE MINIMIZATION AUDIT

Facility Name: Jordan Sulpho-chemicals Auditor/Firm: SAIC / RSS

Date: 9/20/1994

WASTE STREAM INFORMATION

(one form for each stream)

Stream ID: _____

1. Streamname: Domestic (sanitary) wastewater.
   (wastewater, waste oil, still bottoms, etc.)

2. Discharge Identification: _____
   (Enter process or equipment from which stream is discharged)

3. Stream flow/quality:
   minimum flow: _____ L/min
   maximum flow: _____ L/min
   average flow: 3 m^3/d ~~L/min~~

4. Is stream continuous orintermittent? Continuous.

5. Which of following is the cause of the waste? Not Applicable

   a. Process chemistry = (Reaction stoichiometry, kinetic, yield).
      Describe: _____

   b. Engineering Design (capacity, pressure, temperature limitations, etc.). Describe: _____

   c. Operations = (operating rates, order of addition, etc.) Describe: _____

   d. Maintenance = (leaks, spills, corrosion, etc.)
      Describe: _____

6. Are the components of the waste stream a raw material (RM), product (P), useful byproduct (UPB), nonuseful byproduct (NBP), solvent (S), catalyst (C), or an impurity (I) in the raw material?

   (Attach analysis records if possible)

   Fill out attached Figure 1 for each waste stream

WQICP WASTE MINIMIZATION AUDIT

Facility Name: Jordan Sulpho-Chemicals Auditor/Firm: SAIC / RSS

Date: 9/20/1994

Component Name	Conc (mg/L)	Check One						
		RM	P	UBP	NBP	S	C	I

7. Waste stream characteristics -- pH:____ TSS: ____ TDS: ____
Color: ____ Hardness: ____ Odor: ____ TOC: ____ Other;____

8. Current disposition of the stream: Unlined excavation

9. Current effluent criteria and disposal limitation:

Jordanian Standard 893

10. Permits relevant to the waste stream disposition:

Not Applicable

11. Current cost of disposal and/or treatment for this waste stream:

Not Applicable

12. If stream is currently being treated, list: No

a. Current treatment parameters (chemical consumption, treatment conditions, etc.):

b. Existing treatment equipment (identify, size and type of equipment):

100

WQICP WASTE MINIMIZATION AUDIT

Facility Name: Jordan Sulpho-Chemicals Auditor/Firm: SAIC / RSS

Date: 9/20/1994

Other pertinent information: None.

WQICP WASTE MINIMIZATION AUDIT

Facility Name: Jordan Sulphochemicals Auditor/Firm: SAIC / RSS

Date: 9/20/1994

INDIVIDUAL WASTE STREAM CHARACTERIZATION

(page 1 of 4)

1. Waste Stream Name/ID: Scrubber gas effluent Stream No._____

2. Waste Characterization (attach additional sheets with composition data, as necessary)

   ✓ Gas --- Liquid --- Solid --- Mixed phase

   Density kg/M³ _____ High Heating Value Cal/kg_____
   pH _____ Flash Point _____ % Water_____

3. Waste Leaves Process as:

   ✓ air emission -- wastewater -- solid waste

4. Occurrence:
   ✓ -- continuous
   -- discrete
   discharge triggered by -- chemical analysis_____
   -- other (describe)_____

   Type -- periodic_____length of period_____
   -- sporadic

5. Generation Rate:
   Annual Not Known kg per year
   Maximum _____ kg per _____
   Average _____ kg per _____
   Frequency _____ batches per _____
   Batch Size_____ average _____ range

108

WQICP WASTE MINIMIZATION AUDIT

Facility Name: Jordan Sulpho-Chemicals Auditor/Firm: SAIC / RSS

Date: 9/20/94

INDIVIDUAL WASTE STREAM CHARACTERIZATION

(page 2 of 4)

6. Waste Origins/Sources

Fill out this worksheet to identify the origin of the waste. If the waste is a mixture of waste streams, fill out a sheet for each of the individual waste streams.

Is the waste mixed with other wastes? ---- Yes ✓ No

Describe how the waste is generated.

Gaseous Stream from the sulfonater film reactor is separated from liquid products and treated in an electrostatic precipitator and then in a scrubber. Caustic soda solution is used to get rid of SO_2 and converting it into Na_2SO_3, Na_2SO_4. However, some SO_2, SO_3 aerosol are emitted to the atmosphere.

Example: Formation and removal of an undesirable compound, removal of an unconverted input material, depletion of a key component, equipment cleaning waste, obsolete input material, spoiled batch and production run, spill or leak cleanup, evaporative loss, venting losses, etc.

WQICP WASTE MINIMIZATION AUDIT

Facility Name: Jordan Sulpho-Chemicals Auditor/Firm: SAIC/RSS

Date: 9/20/1994

INDIVIDUAL WASTE STREAM CHARACTERIZATION

(page 3 of 4)

Waste Stream Scrubber gas effluent (Sulfonation plant)

7. Management Method

Leaves site in
--- bulk
--- 55 gal drum
✓ - other (describe) through 12-15mhight Stack

Disposal Frequency Continuous

Applicable Standards/Regs No air Jordanian Standards.

Managed
--- onsite --- offsite
--- other (describe)

Recycling
--- direct use/re-use
--- energy recovery
Not Applicable --- redistilled
--- other (describe)

reclaimed material returned to site?

--- Yes --- No --- used by others

residue yield
residue disposal

Treatment
--- biological
--- oxidation/reduction
--- pH adjustment
--- precipitation
✓ - other (describe) Reaction with NaOH to form aqueous solution of Na_2SO_4, Na_2SO_3

Final Disposition
--- Dump
--- pond
✓ - other (describe) To Atmosphere

INDIVIDUAL WASTE STREAM CHARACTERIZATION

(page 4 of 4)

WQICP WASTE MINIMIZATION AUDIT

Facility Name: Jordan Sulpho-Chemicals Auditor/Firm: SAIC / RSS

Date: 9/20/1994

cost as of Not Applicable (quarter and year)

Cost Element	Unit Price JD per ____	Reference/Source
Onsite Storage & Handling		
Pretreatment		
Container		
Transportation Fee		
Disposal Fee		
Taxes		
Total disposal Cost		

WQICP WASTE MINIMIZATION AUDIT

Facility Name: Jordan Sulpho-Chemicals Auditor/Firm: SAIC / RSS

Date: 9/20/1994

WASTE STREAM INFORMATION

(one form for each stream)

Stream ID: _____

1. Streamname: Scrubber gas effluent (Sulfonation Plant)
   (wastewater, waste oil, still bottoms, etc.)

2. Discharge Identification: Gas Scrubber (Sulfonation Plant)
   (Enter process or equipment from which stream is discharged)

3. Stream flow/quality: Not Known.
   minimum flow: _____ L/min
   maximum flow: _____ L/min
   average flow: _____ L/min

4. Is stream continuous orintermittent? Continuous

5. Which of following is the cause of the waste?

   a. Process chemistry = (Reaction stoichiometry, kinetic, yield).
   Describe: Reaction of SO2 gas with NaOH to form Na2SO3 and NaSO4 aquous solution

   b. Engineering Design (capacity, pressure, temperature limitations, etc.). Describe: _____

   c. Operations = (operating rates, order of addition, etc.) Describe: _____

   d. Maintenance = (leaks, spills, corrosion, etc.)
   Describe: _____

6. Are the components of the waste stream a raw material (RM), product (P), useful byproduct (UPB), nonuseful byproduct (NBP), solvent (S), catalyst (C), or an impurity (I) in the raw material?

(Attach analysis records if possible)

Fill out attached Figure 1 for each waste stream

112

WQICP WASTE MINIMIZATION AUDIT

Facility Name: Jordan Sulpho-Chemicals Auditor/Firm: SAIC / RSS

Date: 9/20/1994

Component Name	Conc ~~(mg/L)~~	Check One RM	P	UBP	NBP	S	C	I
SO2	5 ppm /vol.				✓			
SO3	15 ppm /vol.	✓						
Aerosol (Sulfonic, Sulfuric Acids and Organic Substances)	10 mg/m³							✓

7. Waste stream characteristics -- pH:____ TSS: ____ TDS: ____
Color: ____ Hardness: ____ Odor: ____ TOC: ____ Other;____

8. Current disposition of the stream: To the atmosphere.

9. Current effluent criteria and disposal limitation:

No Jordanian Standard to regulate air pollution.

10. Permits relevant to the waste stream disposition:

Not Applicable.

11. Current cost of disposal and/or treatment for this waste stream:

Not Applicable.

12. If stream is currently being treated, list:

a. Current treatment parameters (chemical consumption, treatment conditions, etc.):

See Figure 2

b. Existing treatment equipment (identify, size and type of equipment):

See figure 2

WQICP WASTE MINIMIZATION AUDIT

Facility Name: Jordan Sulpho-Chemicals Auditor/Firm: SAIC / RSS

Date: 9/20/1994

Other pertinent information: None

WQICP WASTE MINIMIZATION AUDIT

Facility Name: Jordan-Sulphochemical Auditor/Firm: SAIC / RSS

Date: 9/20/1994

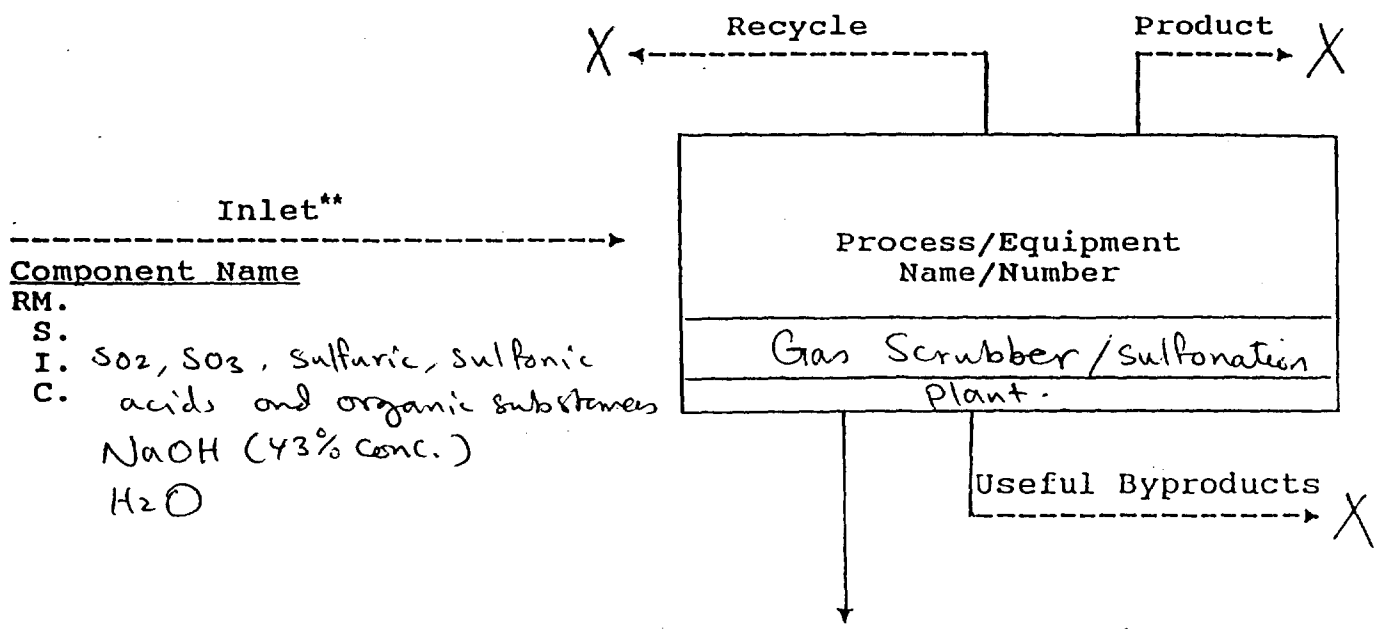

Waste Stream Gas Stream

Name	(mg/L)
SO_2	5 ppm/vol. at steady conditi 20-30 ppm/vol. at start-up.
SO_3	15 ppm/vol.
Aerosol	10 mg/m^3 (As sulfonic, sulfuric acids and organic substances)

X: None existance.

WQICP WASTE MINIMIZATION AUDIT

Facility Name: Jordan-Sulpho-Chemicals Auditor/Firm: SAIC/RSS

Date: 9/20/94

INDIVIDUAL WASTE STREAM CHARACTERIZATION

(page 1 of 4)

1. Waste Stream Name/ID: Solid Sulfur Waste Stream No._____

2. Waste Characterization (attach additional sheets with composition data, as necessary)

   --- Gas --- Liquid ✓ Solid --- Mixed phase

   Density kg/M³ _____ High Heating Value Cal/kg_____
   pH _____ Flash Point _____ % Water_____

3. Waste Leaves Process as:

   -- air emission -- wastewater ✓ solid waste

4. Occurrence:
   ✓ continuous
   -- discrete
   discharge triggered by -- chemical analysis_____
   -- other (describe)_____

   Type -- periodic_____length of period_____
   -- sporadic

5. Generation Rate:
   Annual ≈ 1,000 kg per ~~year~~ month
   Maximum _____ kg per _____
   Average ≈ 1000 kg per Month.
   Frequency _____ batches per _____
   Batch Size_____ average _____ range

116

WQICP WASTE MINIMIZATION AUDIT

Facility Name: Jordan Sulpho-Chemicals Auditor/Firm: SAIC / RSS

Date: 9/20/1994

INDIVIDUAL WASTE STREAM CHARACTERIZATION

(page 2 of 4)

6. Waste Origins/Sources

Fill out this worksheet to identify the origin of the waste. If the waste is a mixture of waste streams, fill out a sheet for each of the individual waste streams.

Is the waste mixed with other wastes? ---- Yes ✓ - No

Describe how the waste is generated.

Solid sulfur waste is generated during filtration of molten elemental sulfur.

Example: Formation and removal of an undesirable compound, removal of an unconverted input material, depletion of a key component, equipment cleaning waste, obsolete input material, spoiled batch and production run, spill or leak cleanup, evaporative loss, venting losses, etc.

117

WQICP WASTE MINIMIZATION AUDIT

Facility Name: Jordan Sulpho-Chemicals Auditor/Firm: SAIC / RSS

Date: 9/20/1994

INDIVIDUAL WASTE STREAM CHARACTERIZATION

(page 3 of 4)

Waste Stream Solid Sulfur Waste (sulfonation plant)

7. Management Method

Leaves site in
--- bulk
--- 55 gal drum
-✓- other (describe) Stored on site, sold to farmers and burned on site.

Disposal Frequency Continuous

Applicable Standards/Regs Not Applicable.

Managed
✓- onsite --- offsite
✓- other (describe)

Recycling
--- direct use/re-use By farmers (part of it)
--- energy recovery
--- redistilled
--- other (describe)

reclaimed material returned to site?

--- Yes --- No --- used by others

residue yield
residue disposal

Treatment
--- biological
✓- oxidation/~~reduction~~ Part of it burned on site
--- pH adjustment
--- precipitation
--- other (describe)

Final Disposition
--- Dump
--- pond
-✓- other (describe) Stored on site, burned on site and sold to farmers

INDIVIDUAL WASTE STREAM CHARACTERIZATION

(page 4 of 4)

WQICP WASTE MINIMIZATION AUDIT

Facility Name: Jordan Sulpho-Chemicals Auditor/Firm: SAIC / RSS

Date: 9/20/1994

cost as of Not Applicable (quarter and year)

Cost Element	Unit Price JD per ____	Reference/Source
Onsite Storage & Handling		
Pretreatment		
Container		
Transportation Fee		
Disposal Fee		
Taxes		
Total disposal Cost		

WQICP WASTE MINIMIZATION AUDIT

Facility Name: _____ Auditor/Firm: _____

Date: _____

WASTE STREAM INFORMATION

(one form for each stream)

Stream ID: _____

1. Streamname: Solid Sulfur Waste
   (wastewater, waste oil, still bottoms, etc.)

2. Discharge Identification: Sulfur Melting and Filtration Unit
   (Enter process or equipment from which stream is discharged)

3. Stream flow/quality:

   minimum flow: _____ L/min
   maximum flow: _____ L/min
   average flow: 1 ton/month ~~L/min~~

4. Is stream continuous orintermittent? Continuous

5. Which of following is the cause of the waste?

   a. Process ~~chemistry~~ = (Reaction stoichiometry, kinetic, yield).
      Describe: Separation of impurities in the molten Sulfur

   b. Engineering Design (capacity, pressure, temperature limitations, etc.). Describe: _____

   c. Operations = (operating rates, order of addition, etc.) Describe: _____

   d. Maintenance = (leaks, spills, corrosion, etc.)
      Describe: _____

Are the components of the waste stream a raw material (RM), product (P), useful byproduct (UPB), nonuseful byproduct (NBP), solvent (S), catalyst (C), or an impurity (I) in the raw material?

(Attach analysis records if possible)

Fill out attached Figure 1 for each waste stream

20

WQICP WASTE MINIMIZATION AUDIT

Facility Name: _____ Auditor/Firm: _____

Date: _____

Component Name	Conc (mg/L)	Check One						
		RM	P	UBP	NBP	S	C	I

7. Waste stream characteristics -- pH: ____ TSS: ____ TDS: ____ Not Known
Color: ____ Hardness: ____ Odor: ____ TOC: ____ Other; ____

8. Current disposition of the stream: Stored on site. Part of it is sold to farmers and part of it is burned on site.

9. Current effluent criteria and disposal limitation:

Not Applicable

10. Permits relevant to the waste stream disposition:

Not Applicable

11. Current cost of disposal and/or treatment for this waste stream:

Not Applicable

12. If stream is currently being treated, list: No

a. Current treatment parameters (chemical consumption, treatment conditions, etc.):

b. Existing treatment equipment (identify, size and type of equipment):

WQICP WASTE MINIMIZATION AUDIT

Facility Name: _____ Auditor/Firm: _____

Date: _____

Other pertinent information: None

WQICP WASTE MINIMIZATION AUDIT

Facility Name: _____ Auditor/Firm: _____

Date: _____

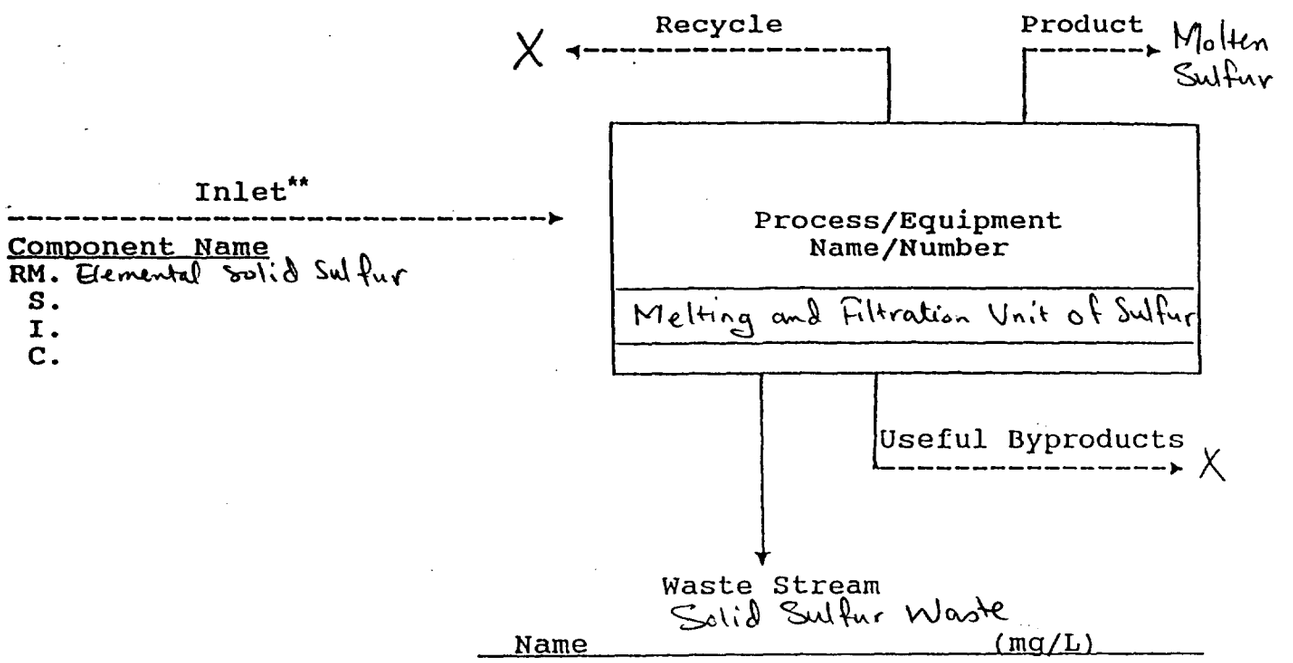

X: None existance.

WQICP WASTE MINIMIZATION AUDIT

Facility Name: Jordan Sulpho-Chemicals Auditor/Firm: SAIC/RSS

Date: 9/20/1994

INDIVIDUAL WASTE STREAM CHARACTERIZATION

(page 1 of 4)

1. Waste Stream Name/ID: Sodium Sulfate Solid ~~stream~~ Waste No. _____

2. Waste Characterization (attach additional sheets with composition data, as necessary)

   --- Gas --- Liquid --- [Solid] --- Mixed phase

   Density kg/M³ ___/___ High Heating Value Cal/kg_____
   pH _____ Flash Point _____ % Water_____

3. Waste Leaves Process as:

   -- air emission -- wastewater -- solid waste

4. Occurrence:
   -- continuous
   -- discrete
   discharge triggered by -- chemical analysis_____
   -- other (describe)_____

   Type -- periodic_____length of period_____
   -- sporadic

5. Generation Rate:
   Annual 10 ton/yr kg per year
   Maximum _____ kg per _____
   Average _____ kg per _____
   Frequency _____ batches per _____
   Batch Size_____ average _____ range

124

WQICP WASTE MINIMIZATION AUDIT

Facility Name: Jordan Sulpho-Chemicals Auditor/Firm: SAIC and RSS

Date: 9/20/1994

INDIVIDUAL WASTE STREAM CHARACTERIZATION

(page 2 of 4)

6. Waste Origins/Sources

Fill out this worksheet to identify the origin of the waste. If the waste is a mixture of waste streams, fill out a sheet for each of the individual waste streams.

Is the waste mixed with other wastes? ---- Yes ---- [NO]

Describe how the waste is generated.

This solid waste is generated as a result of the chemical reaction between excess H_2SO_4 and NaOH, Seperation takes place in the intermediate tank.

Example: Formation and removal of an undesirable compound, removal of an unconverted input material, depletion of a key component, equipment cleaning waste, obsolete input material, spoiled batch and production run, spill or leak cleanup, evaporative loss, venting losses, etc.

125

WQICP WASTE MINIMIZATION AUDIT

Facility Name: Jordan Sulpho-Chemicals Auditor/Firm: SAIC and RSS

Date: 9/20/1994

INDIVIDUAL WASTE STREAM CHARACTERIZATION

(page 3 of 4)

Waste Stream Sodium Sulfate Solid Waste

7. Management Method

Leaves site in --- bulk ____
--- 55 gal drum ____
--- other (describe) Large-size bags (500 kg)

Disposal Frequency intermittent

Applicable Standards/Regs Not applicable

Managed (Stored) -✓- onsite --- offsite
--- other (describe) ____

Recycling -✗- direct use/re-use ____
-✗- energy recovery ____
-✗- redistilled ____
-✗- other (describe) ____

reclaimed material returned to site?

--- Yes --- No --- used by others

residue yield ____
residue disposal ____

Treatment -✗- biological ____
-✗- oxidation/reduction ____
-✗- pH adjustment ____
-✗- precipitation ____
-✗- other (describe) ____

Final Disposition --- Dump ____
--- pond ____
--- other (describe) Stored on-site in large size bags.

INDIVIDUAL WASTE STREAM CHARACTERIZATION

(page 4 of 4)

126

WQICP WASTE MINIMIZATION AUDIT

Facility Name: Jordan Sulpho-Chemicals Auditor/Firm: SAIC and RSS

Date: 9/20/1994

cost as of* _____ (quarter and year) *

Cost Element	Unit Price JD per ____	Reference/Source
Onsite Storage & Handling		
Pretreatment		
Container		
Transportation Fee		
Disposal Fee		
Taxes		
Total disposal Cost		

* Not applicable.

WQICP WASTE MINIMIZATION AUDIT

Facility Name: Jordan Sulpho-Chemicals Auditor/Firm: SAIC and RSS

Date: 9/20/1994

WASTE STREAM INFORMATION

(one form for each stream)

Stream ID: _____

1. Streamname: Sodium Sulfate Solid waste
(wastewater, waste oil, still bottoms, etc.)

2. Discharge Identification: Stored onsite in large-size bags
(Enter process or equipment from which stream is discharged)

3. Stream flow/quality: Annual Generation rate: 10 ton/yr
minimum flow: _____ L/min
maximum flow: _____ L/min
average flow: _____ L/min

4. Is stream continuous orintermittent? intermittent

5. Which of following is the cause of the waste?

[a] Process chemistry = (Reaction stoichiometry, kinetic, yield).
Describe: The reaction of H_2SO_4 and NaOH lead to the production of Na_2SO_4

b. Engineering Design (capacity, pressure, temperature limitations, etc.). Describe: _____

c. Operations = (operating rates, order of addition, etc.) Describe: _____

d. Maintenance = (leaks, spills, corrosion, etc.)
Describe: _____

6. Are the components of the waste stream a raw material (RM), product (P), useful byproduct (UPB), nonuseful byproduct (NBP), solvent (S), catalyst (C), or an impurity (I) in the raw material?

(Attach analysis records if possible)

Fill out attached Figure 1 for each waste stream

128

WQICP WASTE MINIMIZATION AUDIT

Facility Name: Jordan Sulphs-Chemicals Auditor/Firm: SAIC and RSS

Date: 9/20/1994

Component Name	Conc (mg/L)	Check One						
		RM	P	UBP	NBP	S	C	I

7. Waste stream characteristics -- pH:____ TSS: ____ TDS: ____
Color: ____ Hardness: ____ Odor: ____ TOC: ____ Other;____

8. Current disposition of the stream: stored on-site in large-size bags

9. Current effluent criteria and disposal limitation: None

10. Permits relevant to the waste stream disposition: None

11. Current cost of disposal and/or treatment for this waste stream: Not applicable

12. If stream is currently being treated, list: Not applicable

a. Current treatment parameters (chemical consumption, treatment conditions, etc.):

b. Existing treatment equipment (identify, size and type of equipment):

WQICP WASTE MINIMIZATION AUDIT

Facility Name: Jordan Sulpho-Chemicals Auditor/Firm: SAIC and RSS

Date: 9/20/1994

Other pertinent information: None

139

WQICP WASTE MINIMIZATION AUDIT

Facility Name: Jordan Sulpho-Chemicals Auditor/Firm: SAIC and RSS

Date: 9/20/1994

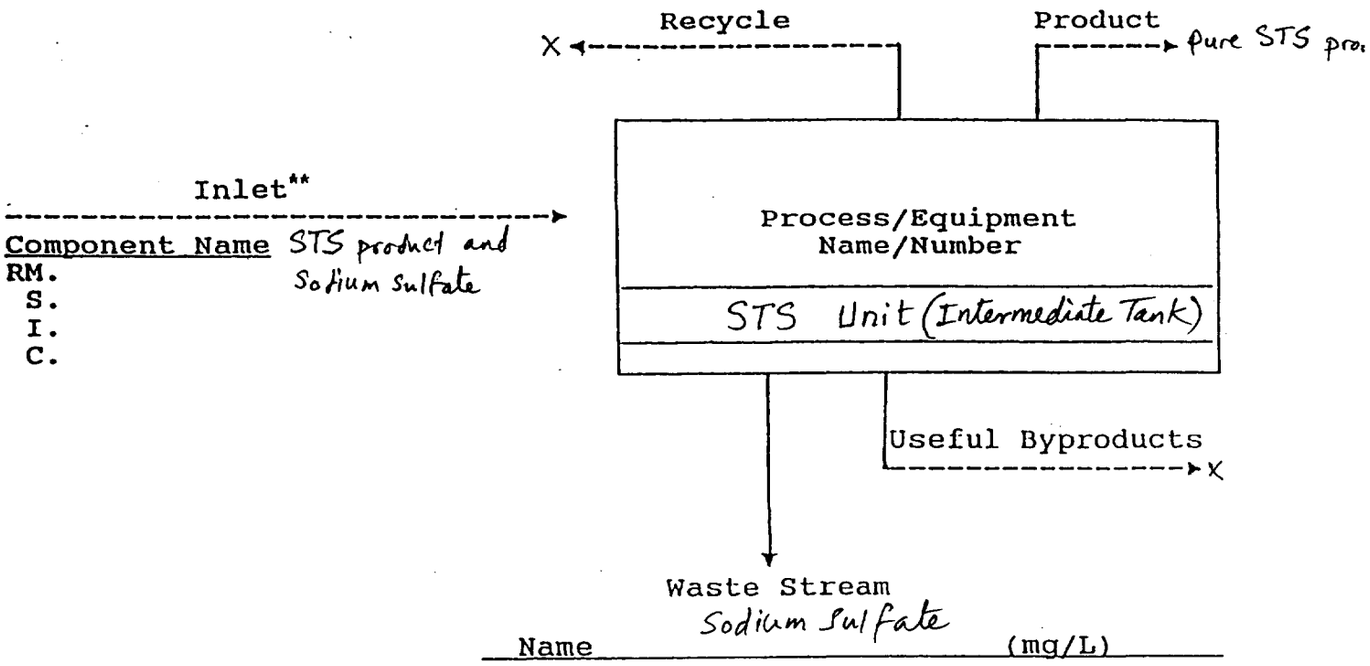

WQICP WASTE MINIMIZATION AUDIT

Facility Name: Jordan Sulpho-Chemicals Auditor/Firm: SAIC / RSS

Date: 9/20/1994

WASTE STREAM SUMMARY

Component of Concerns		Stream No[1]		Stream No		Stream No	
Waste ID/Name		R.O Reject		Industrial ww		Gas Emission	
Source/Origin		R.O Unit		Prod. Units		Scrubber	
Annual Generation Rate (units m^3)		6390		8000		Not Known	
Overall							
Component(s) of Concern							
Cost of Disposal		N.A		N.A		N.A	
Unit Cost (JD per _____)							
Overall (per Year)							
Method of Management[2]		Waste Coll. Basin		Waste Coll. Basin		To Atmosphere	
Priority Rating Criteria[3] *	W	Rating (R)	R*W	Rating (R)	R*W	Rating (R)	R*W
Regulatory Compliance							
Treatment/Disposal Cost							
Waste Quantity Generated							
Waste Hazard							
Safety Hazard							
Minimization Potential							
Potential Byproduct Recovery							
Sum of Priority Ranking Scores							
Priority Rank							

1. Stream number, if applicable, should correspond to those used on process flow diagrams.
2. For example, sanitary dump, onsite recycle, dewatering, etc.
3. Rate each stream (W) in each category on a scale from 0 to 10.

OPTION DEVELOPMENT

Meeting Format (e.g., brainstorming, nominal group technique) _____

Meeting Coordinator _____

* Further investigation needed.

N.A : Not Applicable

13

WQICP WASTE MINIMIZATION AUDIT

Facility Name: Jordan Sulpho-Chemicals Auditor/Firm: SAIC / RSS

Date: 9/20/1994

WASTE STREAM SUMMARY

Component of Concerns		Stream No[1]		Stream No		Stream No	
Waste ID/Name		Domestic WW		Solid Sulfur		Na2SO4 Waste	
Source/Origin		Human Activities		Melting & Filt. Unit		STS Unit	
Annual Generation Rate (units m3 or ton)		900 m3		12 ton		10 ton	
Overall							
Component(s) of Concern							
Cost of Disposal		N.A		N.A		N.A	
Unit Cost (JD per _____)							
Overall (per Year)							
Method of Management[2]		Unlined		Stored on site		Stored	
		Excavation		Burned or sold		on site.	
Priority Rating Criteria[3]	W	Rating (R)	R*W	Rating (R)	R*W	Rating (R)	R*W
Regulatory Compliance							
Treatment/Disposal Cost							
Waste Quantity Generated							
Waste Hazard							
Safety Hazard							
Minimization Potential							
Potential Byproduct Recovery							
Sum of Priority Ranking Scores							
Priority Rank							

1. Stream number, if applicable, should correspond to those used on process flow diagrams.
2. For example, sanitary dump, onsite recycle, dewatering, etc.
3. Rate each stream (W) in each category on a scale from 0 to 10.

OPTION DEVELOPMENT

Meeting Format (e.g., brainstorming, nominal group technique) _____

Meeting Coordinator _____

N.A: Not Applicable.

WQICP WASTE MINIMIZATION AUDIT

Facility Name: Jordan Sulpho-Chemicals Auditor/Firm: SAIC / RSS

Date: 9/20/1994

OPTION DEVELOPMENT *

Option Name: _____

Briefly describe the option _____

Waste Stream(s) Affected; _____

Input Material(s) Affected: _____

Product(s) Affected: _____

Indicate Type;--- Source Reduction
- --- Equipment-Related Change
- --- Personal/Procedure-Related Change
- --- Material-Related Change

--- Recycling/Reuse
- --- Onsite --- Material reused for original Purpose
- --- Offsite --- Material used for lower-quality Purp.
  - --- Material sold
  - --- Material burned for heat recovery

* Refer to the report, chapters 5, 6, 7, and 8

WQICP WASTE MINIMIZATION AUDIT

Facility Name: Jordan Sulpho-Chemicals Auditor/Firm: SAIC / RSS

Date: 9/20/1994

OPTION EVALUATION BY WEIGHTED SUM METHOD

35

Appendix B

Information Provided by the JSC Facility

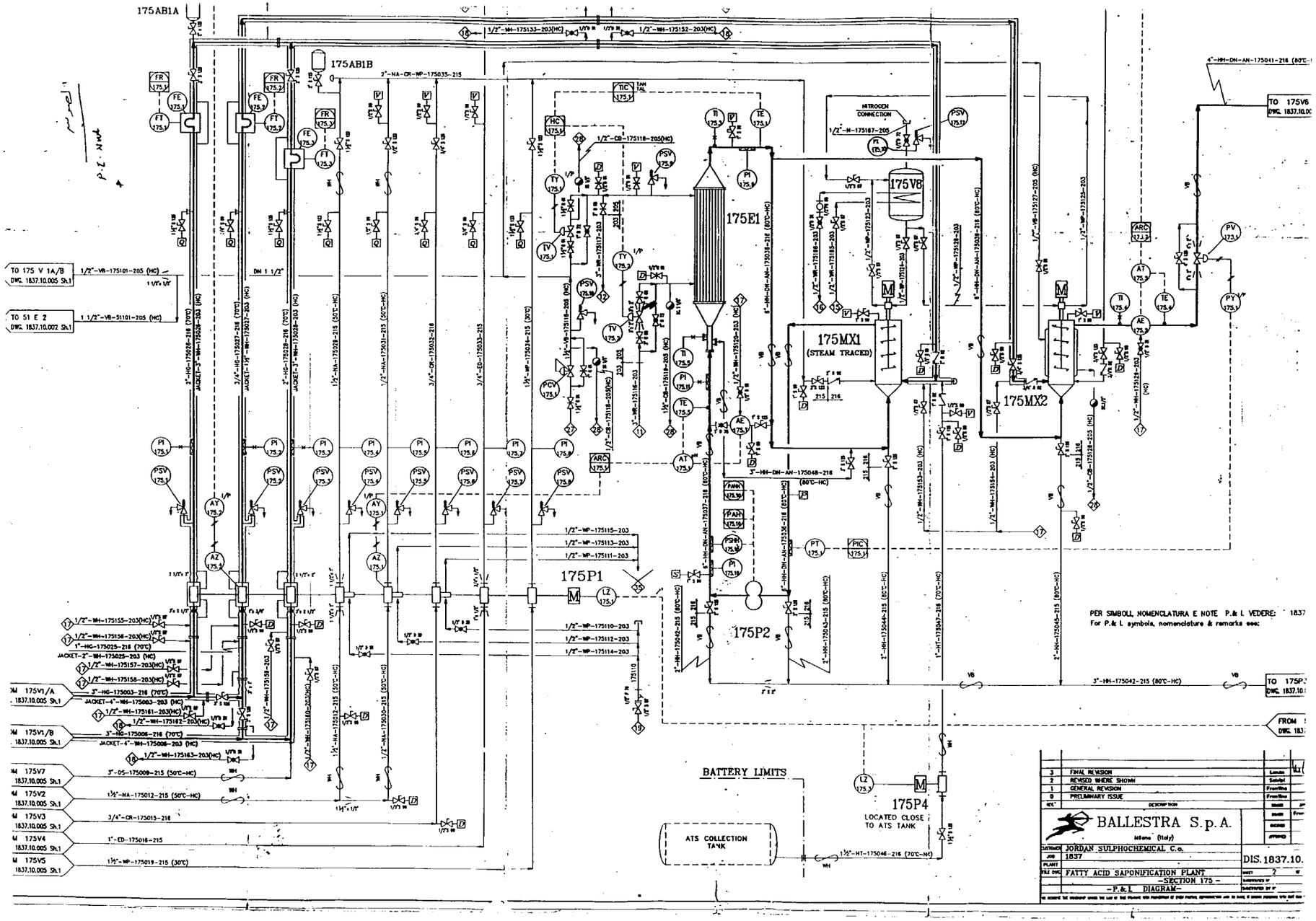
175AB1A
175AB1B
175E1
175V8
175MX1
(STEAM TRACED)
175MX2
175P1
175P2
175P4
LOCATED CLOSE TO ATS TANK
BATTERY LIMITS
ATS COLLECTION TANK
NITROGEN CONNECTION
TO 175 V 1A/B DWG. 1837.10.005 Sh.1
TO 51 E 2 DWG. 1837.10.002 Sh.1
TO 175V6 DWG. 1837.10.0
TO 175P2 DWG. 1837.10.
FROM DWG. 1837
PER SIMBOLI, NOMENCLATURA E NOTE P.& L VEDERE: 1837
For P.& L symbols, nomenclature & remarks see:
3 FINAL REVISION
2 REVISED WHERE SHOWN
1 GENERAL REVISION
0 PRELIMINARY ISSUE
BALLESTRA S.p.A.
Milano (Italy)
JORDAN SULPHOCHEMICAL Co.
1837
DIS.1837.10.
FATTY ACID SAPONIFICATION PLANT
-SECTION 175 -
-P.& I. DIAGRAM-

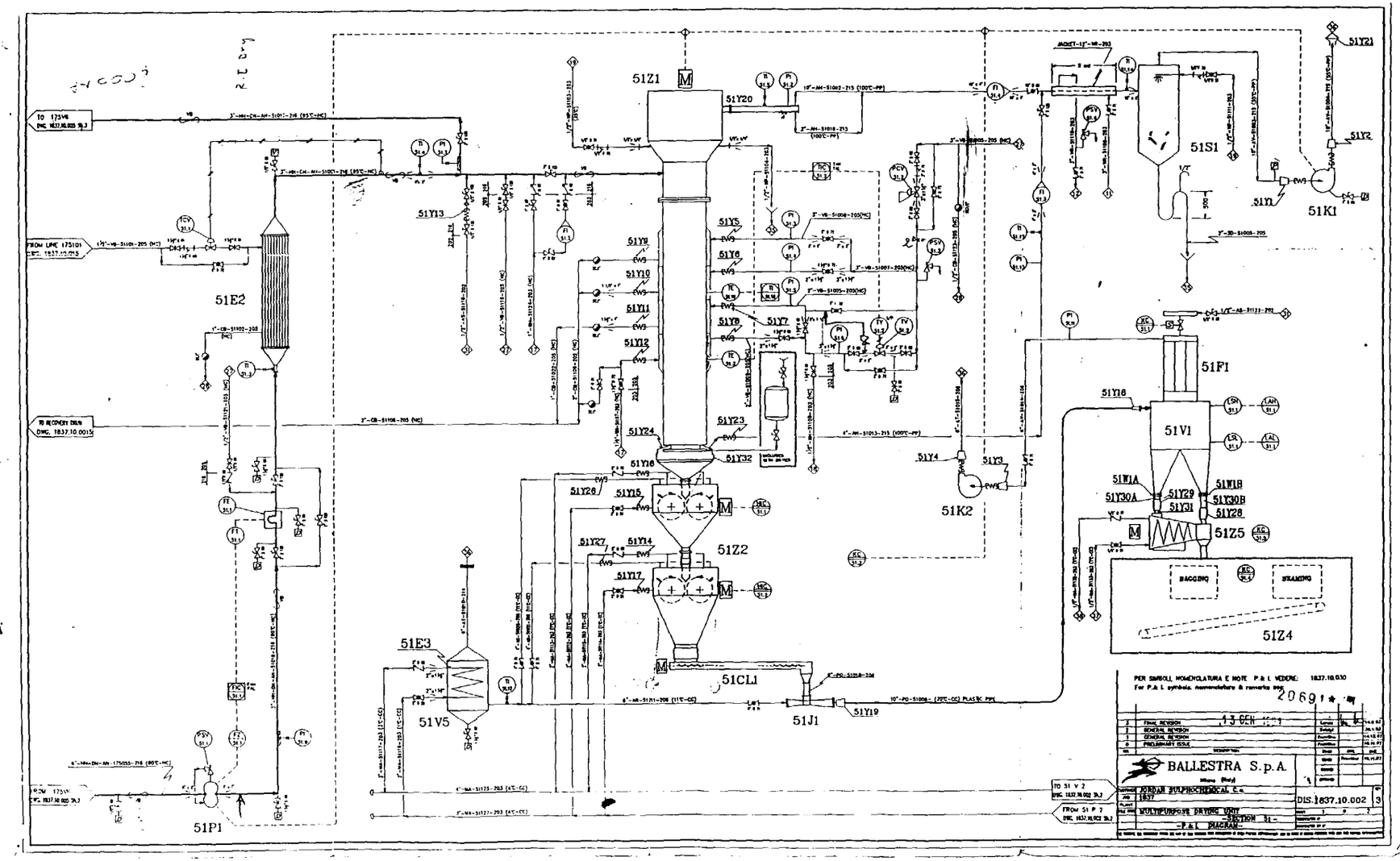
51Z1
51Y20
51S1
51Y21
51Y2
51Y1
51K1
51E2
51Y13
51Y5
51Y6
51Y9
51Y10
51Y11
51Y12
51Y7
51Y8
51Y23
51Y24
51Y32
51Y16
51Y26
51Y15
51Y27
51Y14
51Z2
51Y17
51Y4
51Y3
51K2
51F1
51Y18
51V1
51W1A
51Y30A
51Y29
51Y30B
51Y31
51W1B
51Y28
51Z5
BAGGING
STAKING
51Z4
51E3
51V5
51CL1
51J1
51Y19
51P1
TO 175V6
FROM LINE 175101
TO RECOVERY DRUM
DWG. 1837.10.0015
TO 51 V 2
FROM 51 P 3
PER SIMBOLI, NOMENCLATURA E NOTE P & I VEDERE: 1837.10.030
For P.& I. symbols, nomenclature & remarks see
BALLESTRA S.p.A.
JORDAN SULPHOCHEMICAL Co.
1837
MULTIPURPOSE DRYING UNIT
-SECTION 51-
-P.& I. DIAGRAM-
DIS.1837.10.002
3
FINAL REVISION
GENERAL REVISION
GENERAL REVISION
PRELIMINARY ISSUE

BEST AVAILABLE COPY

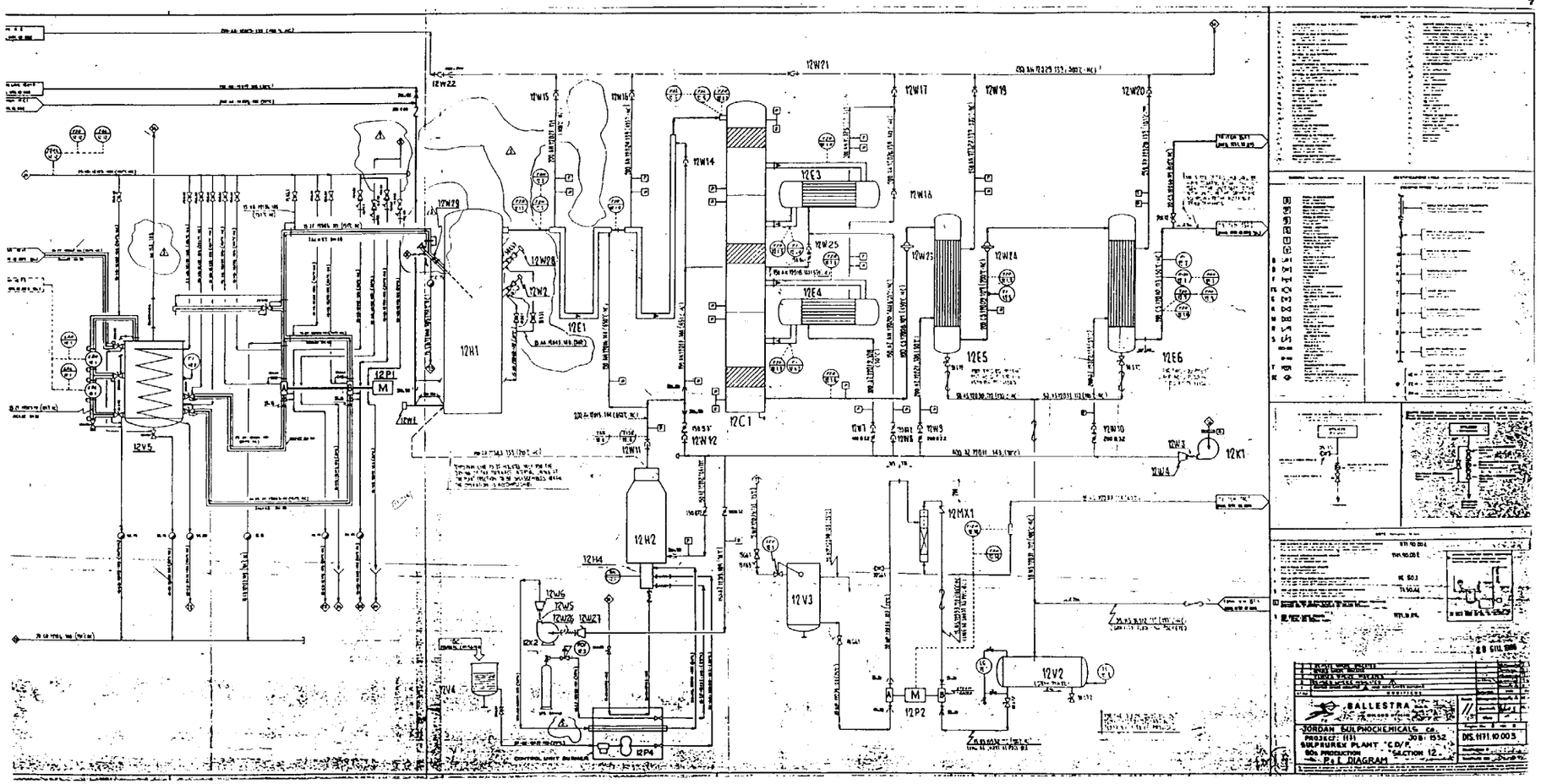

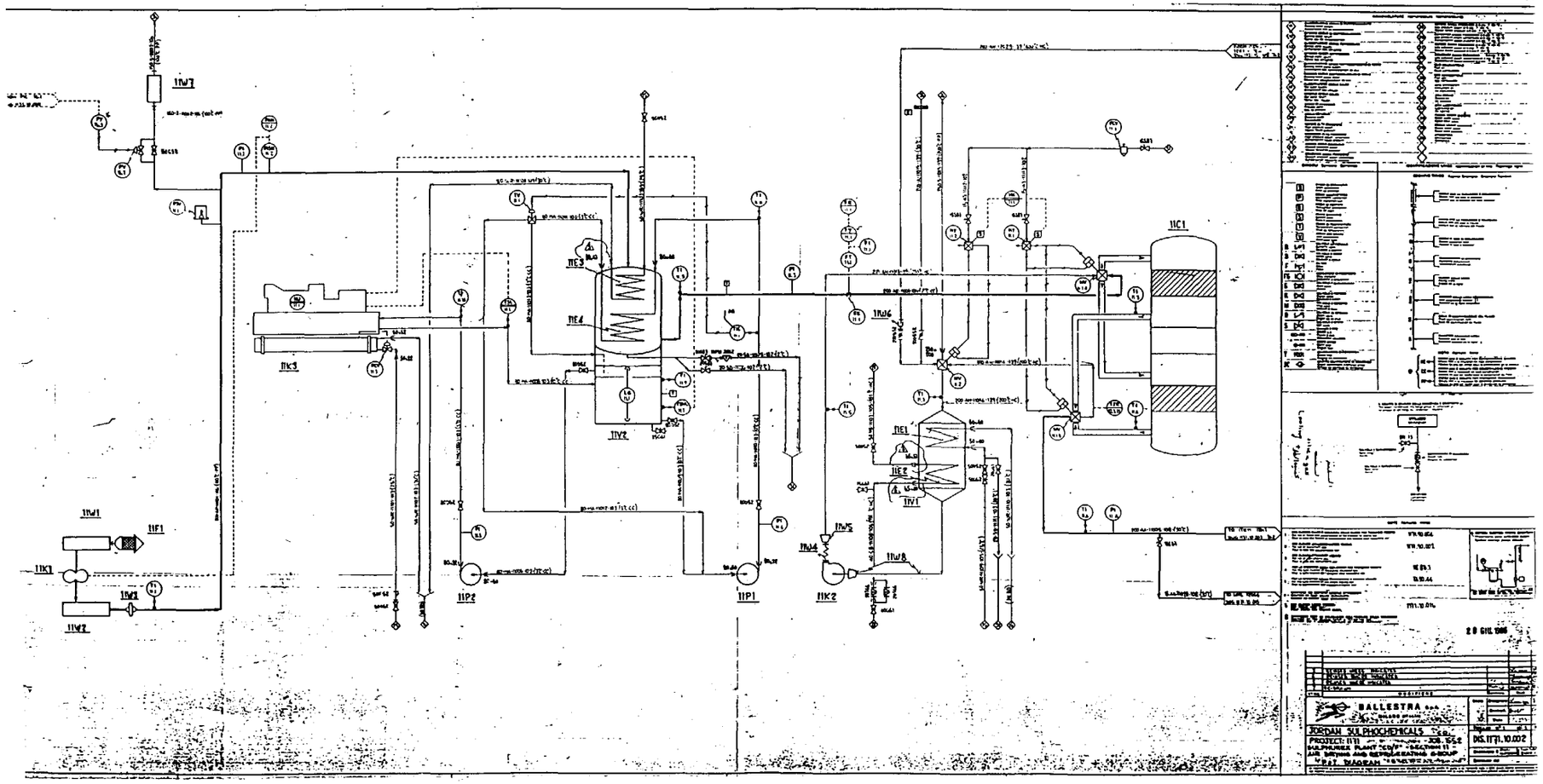

BEST AVAILABLE COPY

BEST AVAILABLE COPY

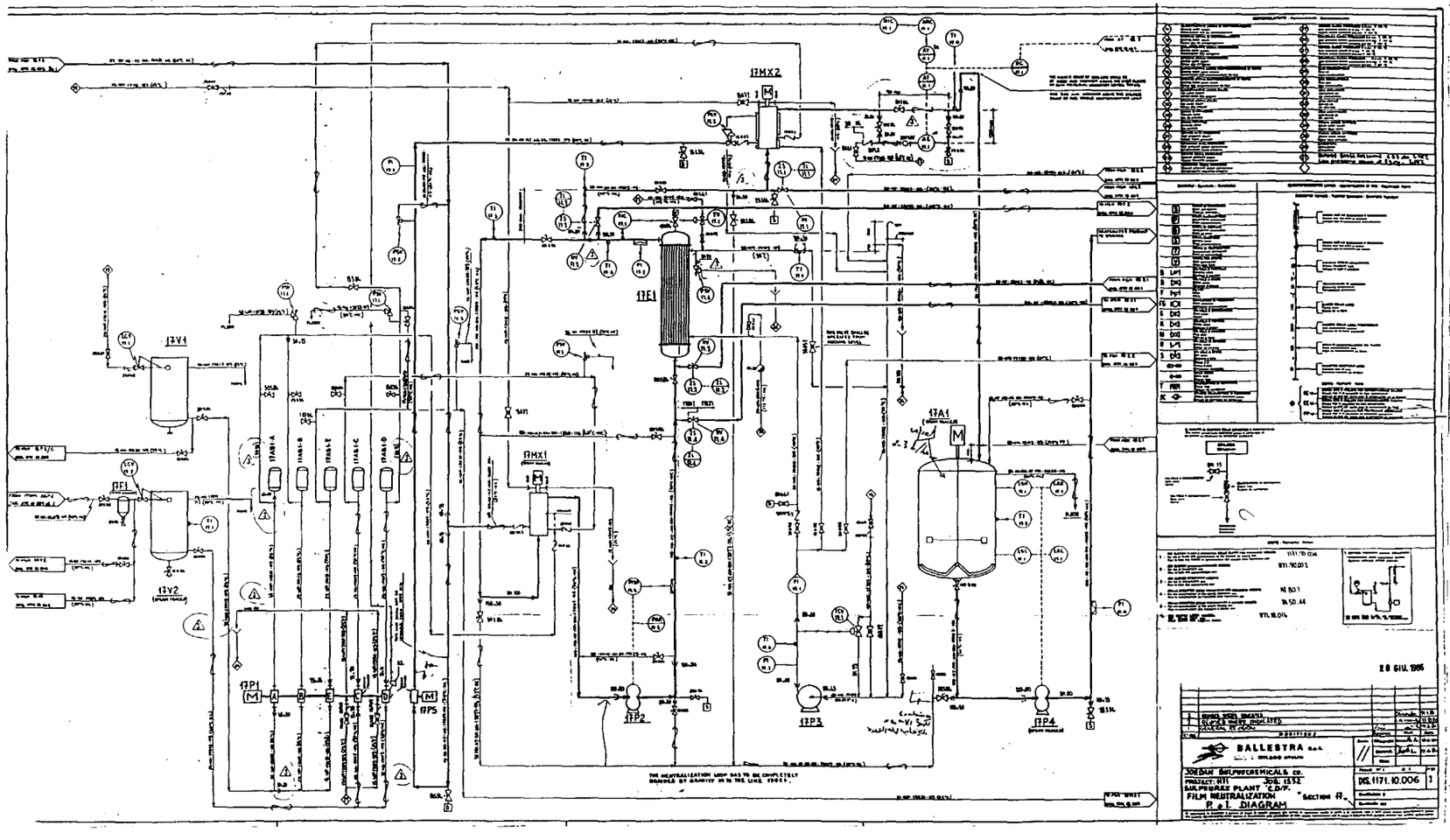

BEST AVAILABLE COPY

BEST AVAILABLE COPY

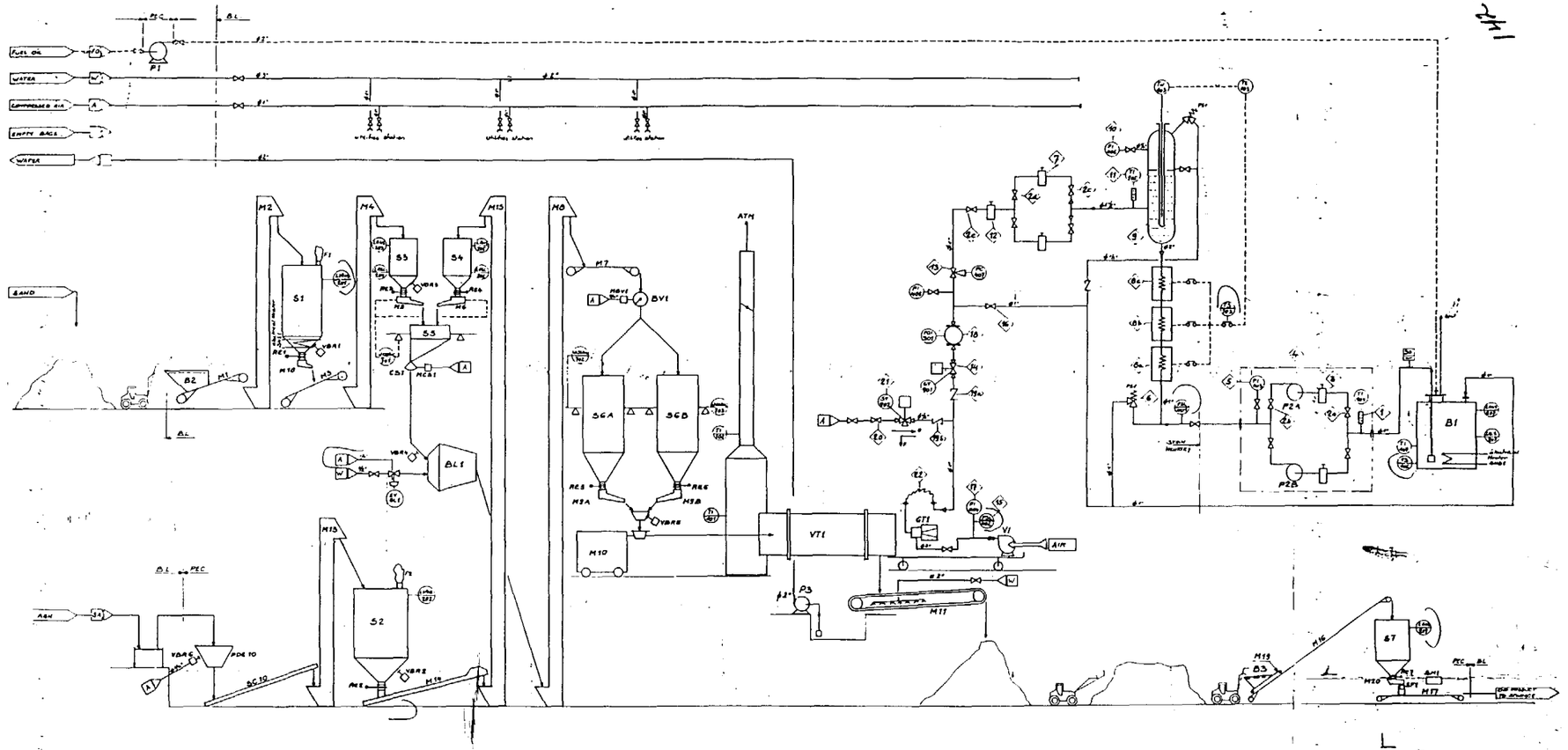

C	R.G.D	Hold valve pipes	G.H.
B	R.G.D	Tracking information	
A	R.G.D	BRINGING UP TO DATE	

PEC ENGINEERING

SULPHO CHEMICAL JORDAN
SODIUM SILICATE
ENGINEERING LINE DIAGRAM (Piping + instrumentation)

A0.40054.000.S.003

BEST AVAILABLE COPY

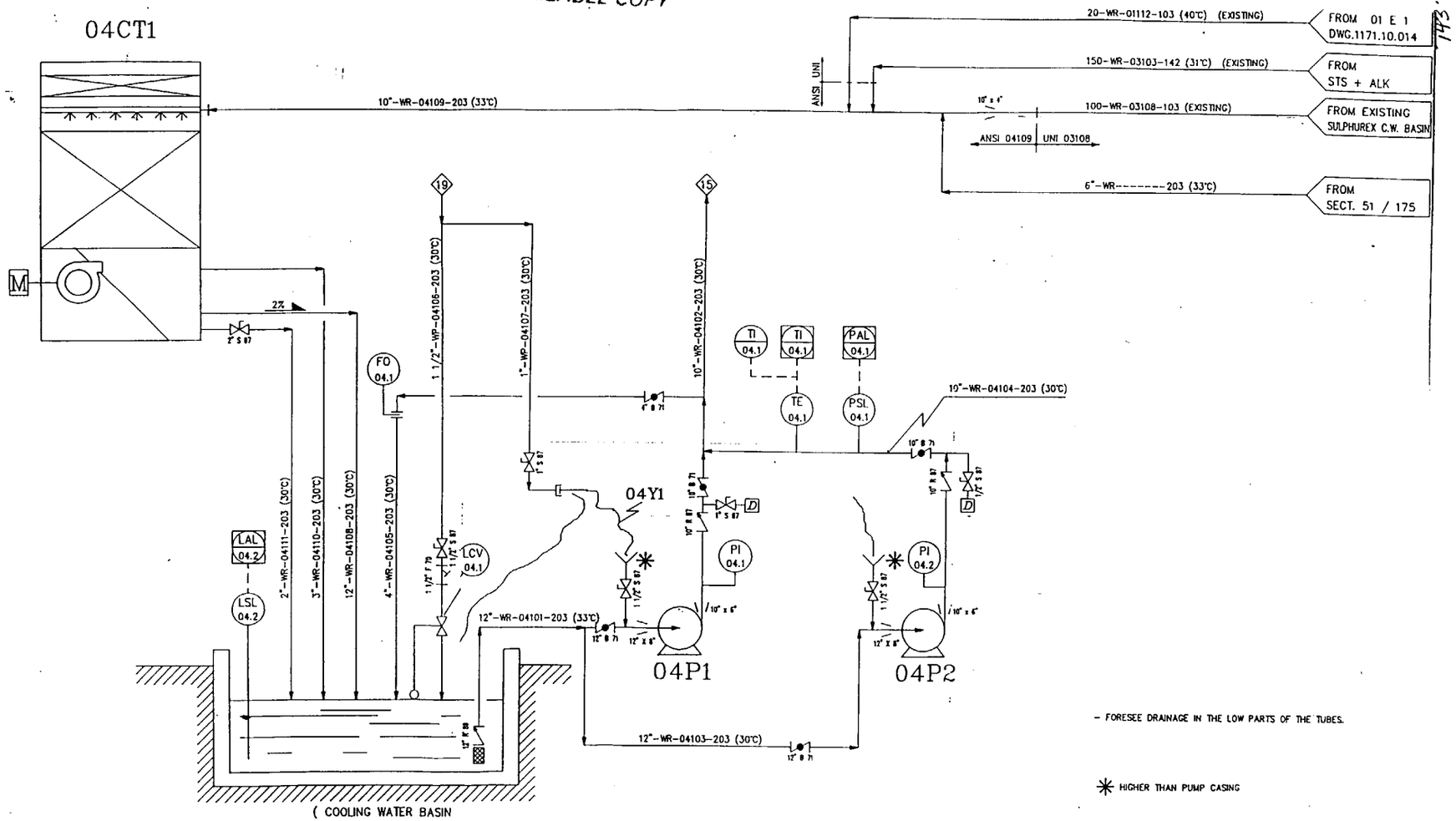

- FORESEE DRAINAGE IN THE LOW PARTS OF THE TUBES.

✳ HIGHER THAN PUMP CASING

PER SIMBOLI, NOMENCLATURA E NOTE P.& I. VEDERE: 1837.10.030
For P.& I. symbols, nomenclature & remarks see:

REV	DESCRIPTION			
2	FINAL REVISION	Lanza		14.6.1
1	GENERAL REVISION	Frontino		14.12.
0	PRELIMINARY ISSUE	Frontino		13.11.

BALLESTRA S.p.A.
Milano (Italy)

CUSTOMER: JORDAN SULPHOCHEMICAL C.o.
JOB: 1837

DIS.1837.10.004

- All flows are estimated based on information provided by JSC Staff.
- Basis: CMEA production 500 ton/yr. CDEA production 125 ton/yr
  300 days/yr.

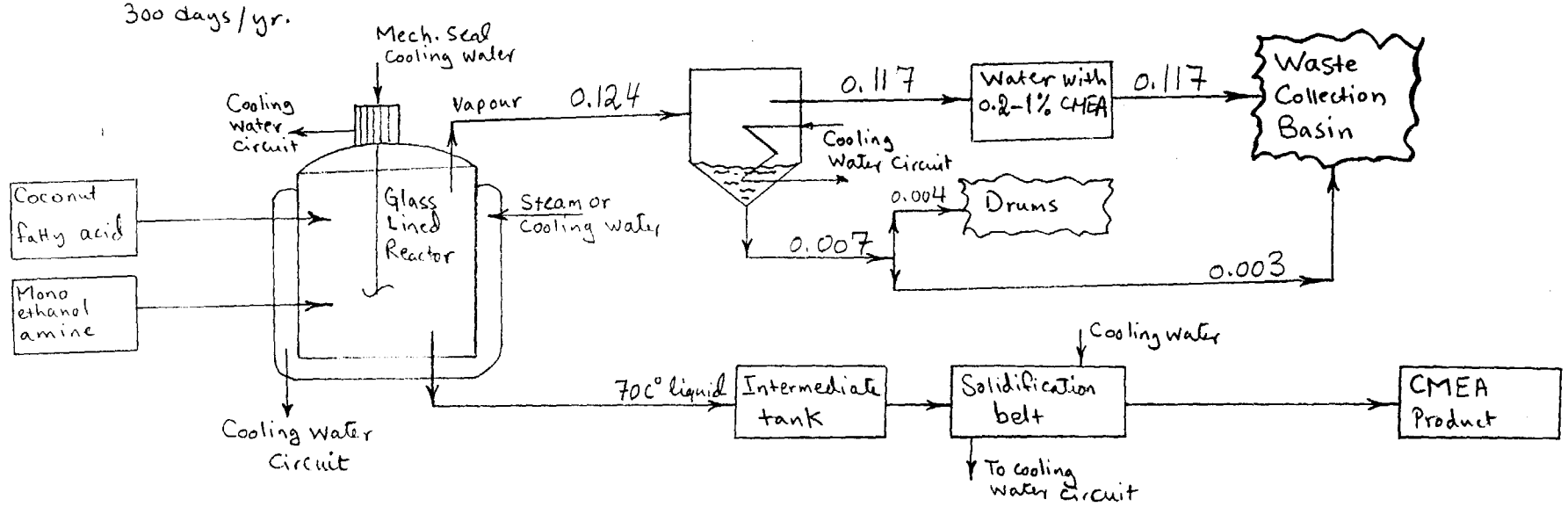

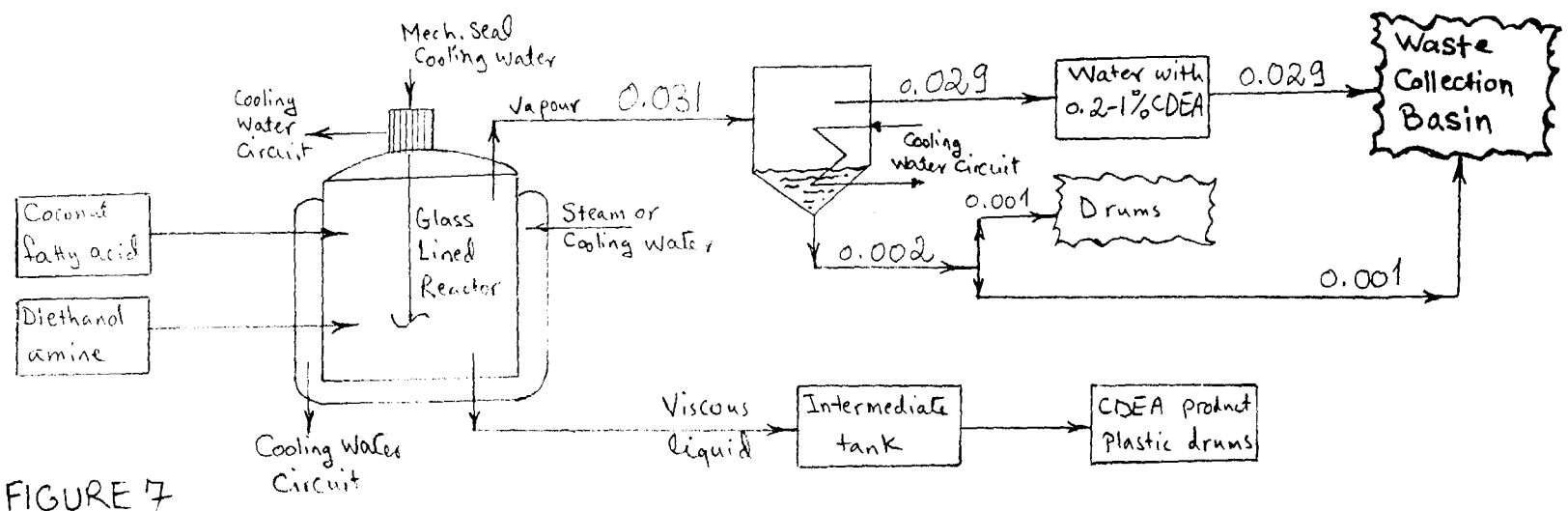

LEGEND

CDEA: Cocodiethanolamide.

CMEA: Cocomonoethanolamide

xx →: Water Flow Rate, m³/

[ ]: Process Unit.

[ ]: Waste Or Losses

FIGURE 7

Process Flow Diagram of Alkanolamides Production

Jordan Sulpho-Chemicals Company (JSC)

Zerka - Jordan.

BEST AVAILABLE COPY

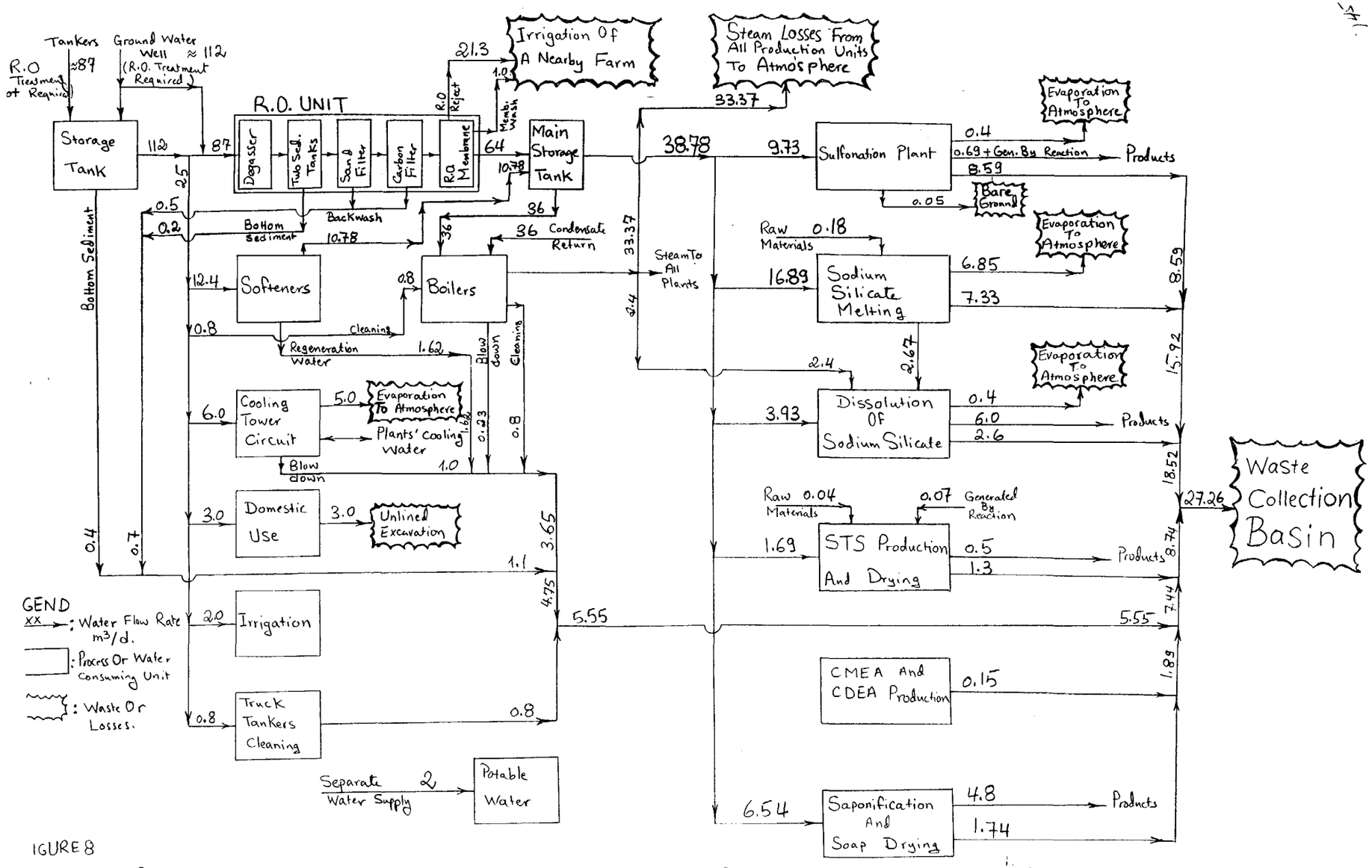

IGURE 8

acility Water Balance

ordan Sulpho-Chemicals Company (JSC)

erka – Jordan

NOTE

All flows are estimated based on information provided by JSC staff.

BEST AVAILABLE COPY

Sulfonation/Sulfation plant

ANNEX 1

EXHAUST GAS TREATMENT

1. PROCESS DESCRIPTION
Re Dwg. 020.00.405

The exhaust gas stream coming from sulphonation is treated before being sent to the atmosphere in order to remove any possible organic, unreacted SO3 traces and unconverted SO2.

The organic and part of SO3 traces, which are normally present in form of aerosol, are separated in an electrostatic precipitator, based on a bundle of tubes arranged in parallel, where in the axis of each of them an electrode is installed.

A potential difference, originated between the electrodes and the pipes internal wall, charges with electricity the impurities contained in the gas stream.

The electric charge of the impurities is opposite in sign to the one of the pipes, therefore the impurities attracted and drained along the pipe walls, are collected into the bottom of the electrostatic precipitator and drained in drums.

The gaseous stream containing the unconverted SO2 is treated in a packed scrubbing column, where water and caustic soda solution are continuously added and recycled.

The SO2 reacts with the caustic soda to obtain an aqueous solution of sodium sulphite; part of the sulphite is oxidated to sulphate in the column it self by the oxygen contained in the exhaust gas.

The exhaust gas stream is saturated with water and sent to the atmosphere.

The caustic soda solution feeding is effected automatically in accordance with the sulphites solution pH.

EQUIPMENT LIST - Unit 014 SX.PLANT - EXHAUST GAS TREATMENT

ITEM	DESCRIPTION	POWER KW	PROCESS-SIDE MATERIAL	WEIGHT Kg	CHARACTERISTICS
401	SO2 SCRUBBER COLUMN		EBONIZED C.S.	2500	
401	ESP FLUSH AIR HEATER		C.S.	50	
401	ELECTROSTATIC PRECIPITATOR	11,00	C.S.	12600	
401	ESP FLUSH AIR FAN	1,10	C.S.	200	
401	SO2 SCRUBBER RECIRCULATION PUMP	3,00	S.S. 316	250	

147

3. PERFORMANCES

The characteristics of the gas stream (as your request) sent to the exhaust gas treatment are the following:

Gas flow : 3500 Kg/h

Composition:

- SO_2 : 2500 ppm/wt
- SO_3 : 2500 ppm/wt (as aerosol and gas)
- Sulphuric, sulphonic and organic substances: 700 ppm/wt

Gas temperature: (°C): 50 approx.

3.1 Liquid Effluents

Two liquid effluents are produced: the ESP acid waste discharged from the electrostatic precipitator and the solution from the SO_2 scrubbing.

ESP waste

The waste coming from the electrostatic precipitator is a relatively viscous liquid composed of sulphonic acid, sulphuric acid and free oil.

Characteristics, quality and composition in accordance with the different raw materials are listed in the attached table.

TYPE OF RAW MATERIALS

	DDB	Alcohol	Ethoxylated alcohol
Possibility of recovery	normally yes	normally no	normally no
Sulphonic acid content	80-90%	50-90%	50-90%
H_2SO_4 content	5-15%	15-25%	15-25%
Free oil content	5-15%	5-40%	5-40%
Color	200-500°K	200-500°K	200-500°K
Dioxane content	-	-	1000-10000 ppm wt
Quantity per 1 ton of 100% active matter	1-2 Kg	1-3 Kg	1-3 Kg

149

Discharge solution of SO2 scrubbing column

The unconverted SO2 is treated in the scrubbing column with NaOH and transformed into Na2SO3; part of the Na2SO3 is then oxydated to Na2SO4 in the column itself by the oxygen contained in the exhaust gas.

The Na2SO3/Na2SO4 salts are drained as an aqueous solution at about 10% concentration having a pH maintained constant (about 8.5); its quantity is directly proportional to the sulphur burnt and to the unconverted SO2.

When 100 Kg/h of sulphur are burnt and the conversion yield is 98%, the SO2 column will discharge approx 80 Kg/h of solution containing 62.5 moles/h of Na2SO3/Na2SO4 (Na2SO3/Na2SO4 typical ratio is 60/40 but when SO3 at low concentration is utilized and, consequently, the oxygen content in the exhaust gas is higher, the Na2SO3 to Na2SO4 oxidation in the scrubbing column can reach a 70% yield and the ratio becomes 30/70)

3.2 Gaseous Effluents

The equipment foreseen in the gas treatment unit is designed to clean the gas to a level actually accepted everywhere in the world, even if the plant is installed in urban areas.

During the normal operation, the composition of the treated gas stream will be:

- SO2 : 5 ppm by vol. at steady condition (20-30 ppm at start-up)

- SO3 : 15 ppm/vol

- Aerosol : 10 mg/m3 (as sulphonic, sulphuric and organic substances)

- no visible plume

An expected value of 10 ppm of SO2 in the gas stream can be reached also during start-up, if it is done in the best possible way and with an over-dimensioned SO2 scrubber column.

4. CONSUMPTIONS

The following estimated consumptions based on max normal operating conditions are foreseen:

4.1 Raw-materials

caustic soda (as 100%):	24 Kg/h max.
process water:	0.35 m3/h max.

4.2 Utilities

saturated steam (at 4 Kg/cm2):	10 Kg/h
instrument air:	1 Nm3/h
installed electric power:	15 Kw
absorbed electric power (average):	12 Kw

BEST AVAILABLE COPY

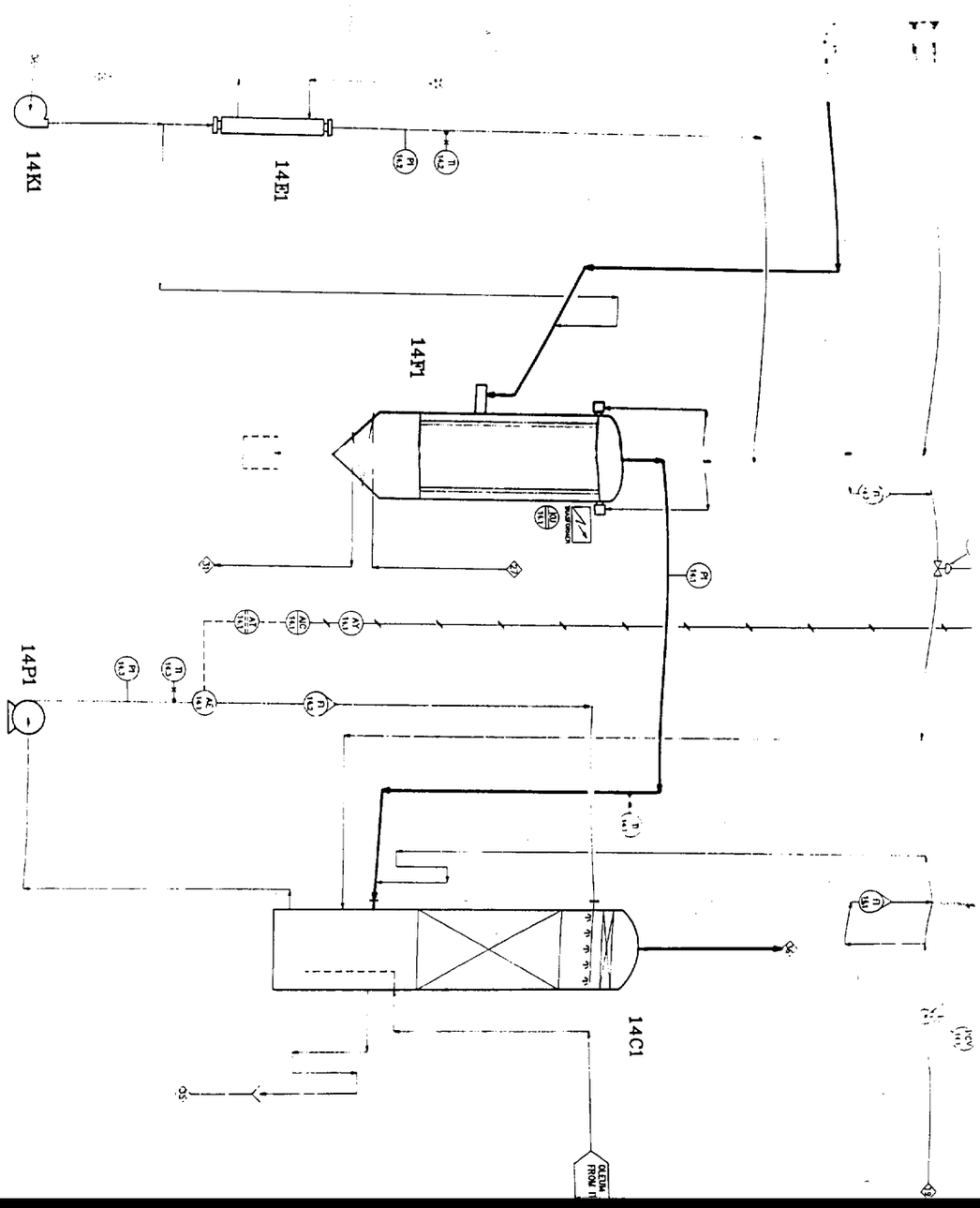

Sulfation / Sulfonation Plant

PROCESS DESCRIPTION

See dwg.	1171.10.002	Air drying
	1171.10.003	SO3 production
	1171.10.004	Gas-scrubbing
	1171.10.005	Film sulph(on)ation and ageing and hydrolysis
	1171.10.006	Film neutralization
	1171.10.007	Alpha olefine hydrolysis
	1171.10.008	STS and Alkanolamides production
	1171.10.009	Liquid raw materials storage
	1171.10.010	Hot water production
	1171.10.012	Cooling water system
	1171.10.013	Steam production
	1171.10.014	Compressed air
	1171.10.015	Bench scale sulphonation
	1171.10.017	Process & utilities interconnecting
	1171.10.018	Sulphurex plant - zone "A" - "B"
	1171.10.019	STS Plant - Zone "F"

The Ballestra sulphonation/sulphation plant based on the film reactor is a continuous automatic plant by which it is possible to sulphonate or sulphate all the raw materials utilized in the field of detergency, such as: dodecylbenzene, linear alkylbenzene, alpha-olefines, natural and synthetic fatty alcohols and ethoxylated alcohol, methylesters, etc.

The process is based on the sulphonation or sulphation by means of gaseous SO_3 obtained by burning sulphur.
The plant is composed of the following sections:

- air drying
- sulphur burning
- SO_2 and SO_3 production
- sulphonation or sulphation
- ageing and hydrolysis
- exhaust gas scrubbing - SO_3 absorption and sulphite oxidation
- neutralization

The general term "Sulphonation" will be used throughout, to mean both sulphonation and sulphation. When sulphation only is concerned the specific term will be used.

Air drying

The air requested for sulphur combustion and SO_3 production is filtered, blown by a low pressure blower and cooled in order to condense the moisture, obtaining a constant air flow which is conveyed to one of the two silicagel driers connected in parallel, while the other one is under regeneration.
The silicagel regeneration is accomplished by circulation of hot air, coming from SO_2/SO_3 generation cooling system or by steam.

SO2 AND SO3 PRODUCTION

The sulphur combustion furnace has been designed for this special service.

In the furnace, the sulphur is fed through a pipe and falls on a surface of refractory balls, while the combustion air is supplied in countercurrent, thus obtaining the complete combustion of sulphur without its spraying through a nozzle, which might often clog owing to the sulphur impurities.

This system is quite simple, it does not require any maintenance, and the gas composition does not change.

The temperature of the gas at the burner outlet is around 700°C (1300°F) (corresponding approximately to a SO2 concentration of 7% by volume), thereafter a heat exchanger cools the gas so that it reaches the conversion tower at the required temperature.

The conversion tower is composed of three layers of vanadium pentoxide catalyst.

The gas, passing from a layer to the next one, crosses a heat exchanger to take the gas temperature to optimum conversion values on every stage.

In order to allow a quick start-up, a preheating system has been provided.

The main characteristics of Ballestra pre-heating system has been provided.

156

The main characteristics of Ballestra pre-heating system is that no electric preheater is required, because if it were used, being in presence of SO_3, it would be corroded very quickly.

Moreover, with Ballestra system there is no need to either cut-off or regulation valves in the circuit of conversion lines, which should operate at temperature of about 500°C in presence of SO_2/SO_3, thus being easily corroded.

The gas temperature is of course too high to be suitable for sulphonation, therefore some heat exchangers in series are used to cool the gas down the proper sulphonation temperature.

The hot air coming from SO_3 coolers, is utilized for silicagel regeneration.

SULPHONATION AND SULPHATION

This group is composed by a film reactor, multitube type, having dimensions and number of tubes proportional to the plant capacity.

The sulphonation gas is automatically fed on the reactor top and distributed in part strictly equal on each of the pipes composing the reactor.

The raw material to be sulphonated is fed in co-current with the gas.

Outside the reaction tubes, in the reactor jacket the cooling water circulates in co-current with the film, thus allowing a control of the reaction temperature by heat removing.

The distribution of the gas and the product to be sulphonated is designed in order to assure a constant ratio between the two phases, inside each reaction tube.

The sulphonated or sulphate product, coming out of the reactor is suitably degassed, (and aged and stabilized according to the fed raw material); then it is fed to the neutralization unit.

In this connection the Ballestra sulphonation/sulphation system by film reactor has great advantages towards the other existing systems on the market since in case of power failure an emergency system, included in the supply, avoids any damage to the product and the necessity of cleaning the reactor before resuming the operation.

This system can be also used during plant start-up: the material to be sulphonated is fed and recycled to the reactor until the optimum SO_2-SO_3 conversion is reached.

A great care must be taken when handling and keeping this substance.

If it contacts the skin or the eyes, wash abudantly with 10% boric solution and when the case is important, undergo a medical inspection.

It is advisable to use protective glasses and gloves and eventually antigas masks with proper filter for SO3 if this gas happens to leak in the atmosphere.

5 - Caustic soda

It is a product available in the market either as a solid or as a liquid.

In our plants, caustic soda is used in 40-45% aqueous solution.

This product is highly agressive and when contacting the skin may cause scalds long to be cured.

When handling this product use protective gloves and glasses; in case of accidental contact with the skin wash abudantly with water and with a 10% boric acid dermic solution.

PROCESS TECHNICAL DESCRIPTION

Air treatment (see dwg. 1171.10.002)

The air required for sulphur combustion and for the SO_3 production is filtered and dehumidified to a dew point around -60°C.

The air, suitably filtered to eliminate the dust, flows to the process air compressors that conveys it to the cooling unit.

Here the air is brought to a temperature of +3°C.

The process air compressors operates at a pressure of 0,6 atm max. 0.6.

This pressure is however quite sufficient to convey the air not only through the SO_3 production unit but also through the film unit and the exhaust gas treatment.

The process air cooling units consists of an heat exchangers with ethylene glycol circulation at a temperature below 0°C (range -6° to -2°C).

This unit is designed to condense the process air humidity in a constant way, independently of the climate conditions.

At this stage the air is cooled and partially dehydrated.

From the cooling unit the air gets to the final silicagl dehumidifier which is composed of two drying units connected in parallel, one of which is absorbing moisture from the process air while the other bed is regenerating.

The commutation of the absorption phase into regeneration phase can be effected either manually or automatically; however, always at constant time intervals.

SO_2/SO_3 PRODUCTION

(See dwg. 1171.10.003)

The dried air is conveyed to the sulphur combustion furnace where it meets in countercurrent the liquid sulphur, which is converted into SO_2 by burning.
The sulphur melting and combustion unit is composed of a melting tank provided with a set of filters for molten sulphur and by a special proportioning pump.
The sulphur proportioning is always at controlled temperature in order to keep constant and optimum values of viscosity: 6.5/6.8 cps at 149-151°C.
In the Sulphurex plants of large capacities the sulphur melting is carried out generally in a room that is adjacent to the plant.
In such case, in the plant a storage tank for molten sulphur only will be required.
The sulphur dioxide, having a temperature of about 650°C when coming out of the sulphur combustion furnace, is cooled to about 430°C by means of an air heat exchanger.
At this temperature SO_2/air enters the catalyst tower to be converted into SO_3.

The catalysis tower consists of different layers of vanadium pentoxide catalyst, in between some intermediate heat exchangers are placed, in which the conversion heat is suitably removed by cooling air.
For further cooling and gas dilution, if necessary, a dehumidified air inlet is provided upstream the third catalyst bed and/or upstream the first SO_3 exchanger.
The SO_3/air coming out of the catalysis tower is cooled to about 50°C by one or more air-cooled heat exchangers.
Before every plant start-up a catalyst preheater takes the catalyst to the right conversion temperature.

SULPHATION/SULPHONATION

(See dwg. 1171.10.005)

The sulphation section consists of a tubular reactor, a raw material proportioning group, a partial exhaust gas treatment and an acid transfer pump to the neutralization (owing to the need to neutralize immediately the acids produced by alcohols, alcohol ethers, alpha-olefins etc.).
The raw material is sulphated in the tubular reactor by the gas suitably diluted using dried air coming from the silicagel group.
The special location and construction of the raw material distributing heads allow to have in every reaction tube the stoichiometric quantity of liquid coming into contact with the gas (which is also regulated automatically in stoichiometric quantity).
Along the reaction tube the sulphation reaction is accomplished and the acid coming out of the reactor passes through a first liquid-gas separator from which, through a pump with a motor-variator, is conveyed directly to the neutralization, or for DDB is conveyed

to the ageing and stabilization section and then to the neutralization.

The gas stripped from the liquid passes into a separating cyclone (to eliminate the drops of liquid entrained by the gaseous flow) before flowing to the exhaust gas treatment section.
The liquid coming from the cyclone is discharged by an hydraulic seal.
The section is moreover provided with an emergency system suitable to operate when occurring a voltage drop; when failing the current.

EXHAUST GAS SCRUBBING

Scrubbing of the exhaust sulphonation gases

The exhaust gas stream coming from sulphonation, is treated before getting to the atmosphere in order to separate any possible organic traces, and to eliminate the non-converted SO_2 and SO_3 traces.

The organic and SO_3 traces, that are eventually present in form of aerosol, are separated and eliminated in the electrostatic precipitator.

In this unit a potential difference originates between the electrodes and discharge pipes, which charges with the electricity the impurities contained in the gas stream.

Being the electric charge of the impurities opposite in sign to the one of the pipes, the impurities are attracted and run along the pipe walls, then discharging from the bottom of the electrostatic precipitator.

The gaseous stream containing the non-converted SO_2 is absorbed in a fill-up scrubbing column, in which a water and soda solution is continuously recycled.

In this column the residual SO_2 is fully absorbed (to less than 5 ppm SO_2) and the exhaust gas stream is saturated with water is discharged to atmosphere.

Liquid solution is continuously discharged from the column.

AGEING AND HYDROLYSIS

(See dwg. 1171.10.005)

Description

This section is used to stabilize the sulphonated DDB; it is composed by an ageing unit and a stabilizer.
The product after beeing sulphonated, overflows into the bottom of the ageing unit.
It is then conveyed into the stabilizer, togheter with water added by means of a dosing pump.
Afterwards it is transferred, by means of a pump, to the neutralization unit.

167

FILM NEUTRALIZATION

(See dwg. 1171.10.006)

The acid produced by the sulphation plant is pumped to the new double-step neutralization circuit; into a first reactor the acid in stoichiometric defect, stoichiometric caustic soda and dilution water are pumped.

In the first circuit, consisting of one reactor, tube-plate exchanger with thermostatic control and Mono pump, the neutralized paste is continuously recycled and well amalgamated: when this circuit is full, the paste (with excess of caustic soda) overflows into a second circuit consisting of a 2nd reactor and a final homogenizer.

The remaining quantity of acid is conveyed into the 2nd reactor to complete the reaction and to neutralize the soda that is still free in the mass.

At the outlet of the second reactor a pH control unit, that is directly connected to the pumping element of the NaOH for the 2nd reactor, analyzes continuously the neutralized paste and varies consequently the NaOH quantity in order to obtain in the final homogenizer the quite neutralized paste and constant pH, ready to be utilized.

168

ANNEX "1"

CONTINUOUS FATTY ACIDS

SAPONIFICATION AND DRYING PLANT

شركة السلفوكيماويات الاردنية
الصادرة
الرقم ٢٧٨
التاريخ ١٢/٤/٩٢

TECHNICAL PROPOSAL
N. 92068

الأصل

INDEX

Section 1 BASIC INFORMATIONS

1.1 Scope of the proposal

1.2 Ambient conditions and utilities characteristics

Section 2 PROCESS UNITS

2.1 Plant capacity

2.2 Raw materials and products characteristics

2.3 Consumptions

2.4 Process description

2.5 Equipment and machinery

Section 3 GENERAL SPECIFICATIONS

3.1 Engineering

3.2 Piping

3.3 Instrumentation

3.4 Electric system

3.5 Steel structures

3.6 Thermal insulation

3.7 Painting

Section 4 DRAWINGS

Section 5 ENGINEERING AND CONSTRUCTION STANDARDS

All information and technical data herein contained are the property of Ballestra S.p.A. and can be used only to evaluate the technical proposal with the understanding that it will not be made known to third parties without our previous written authorization.

SECTION 1

BASIC INFORMATION

1.1 Scope of the proposal

1.2 Ambient conditions and utilities characteristics

i92068/oft

172

1.1 SCOPE OF THE PROPOSAL

The present technical proposal concerns a plant for the production of soap paste starting from fatty acids and multipurpose drying unit for the production of soap chips.

The plant is composed by the following units:

UNIT 75: FATTY ACIDS SAPONIFICATION

This unit is designed to produce neat soap at 72-74% concentration as TFA, already additivated and suitable to be fed directly to the drying.

Its capacity is 2160 Kg/h of neat soap, corresponding to 2000 Kg/h of final soap bar (78-80% concentration as TFA)

It is designed to process a wide range of fatty acids

..2 AMBIENT CONDITIONS AND UTILITIES CHARACTERISTICS

In the design and selection of the materials it has been taken into consideration the following climatic conditions and utilities characteristics:

Ambient air

- relative humidity:	50% max at 30°C
- temperature	min 0°C/max 40°C
Height above sea level	0 - 500 m
Electric power:	3 phases, 380 V - 50 Hz
Saturated steam:	pressure 7 Kg/cm2
Service air:	dry and oil free min. pressure 7 Kg/cm2
Instrument air:	dry and oil free dew point - 20°C min. pressure 7 Kg/cm2

Cooling water:

- Temperature:	25°C
- Pressure:	3 kg/cm2

Hot water:

- Temperature (in/out)	70/60°C
- Pressure:	2 Kg/cm2

Process water:

- Pressure:	2 Kg/cm2 min.

SECTION 2

PROCESS UNITS

2.1 Plant capacity

2.2 Raw materials and products characteristics

2.3 Consumptions

2.4 Process description

2.5 Equipment and machinery

2.1 PLANT CAPACITY

2.1.1 Fatty acids saponification

This unit has a capacity of 2160 Kg/h of neat soap 72-74% as TFA corresponding to 2000 Kg/h of dry soap 78-80% concentration as TFA (85-87% as pure soap).

2.1.2 Multipurpose drying unit

Its capacity is the following referred to the different feed stocks:

- 1200 Kg/h of SOAP chips (90% soap content)
- 1200 Kg/h of LABSNa flakes (95% dry product content)
- 1200 Kg/h of SLS flakes (95% dry product content)
- 800 Kg/h of STS flakes (90% dry product content)

Feedstocks: Active Matter at 70% concentration for LABSNa or SLS and 60% for STS.
For soap drying the capacity is referred to the processing of soap solution at 72-74% TFA content (as achievable by continuous FFA saponification plant).

2.2 RAW MATERIAL AND PRODUCT CHARACTERISTICS

2.2.1 Fatty acids saponification

Raw materials characteristics

The following raw materials have been considered as basis for this proposal.

FFA for saponification

Titre (°C)	37-40	38-43	22-26
A.V. (mg. KOH/g)	210-215	200-206	264-274
Sap. value (mg. KOH/g)	211-216	201-206	265-275
J2 Value (g. J2/100 g.)	45-54	50-58	8-11
Colour Loviband	2.5Y+0.6R	5.0Y+1.0R	8Y+1.5R
	Blend 75/25 Tallow/Coco	Tallow	Coco/PK

It has been assumed a content of unsaponificable matter equal to 0.5% max by weight.

Caustic soda

50% weight solution, as per soap industry standards.

Brine

25% wt sodium chloride solution.

Process water

Softened water - hardness 20° F.

Product characteristics

The saponification process is performed at a temperature below 100°C and with no contact with air.

Consequently oxydizing degradation reactions can be excluded.

The neat soap will have the following main characteristics:

- TFA content	72 min
- Free alkalinity as NaOH	0.07%
- Sodium chloride (1)	1.1%
- Unsaponified matter (2)	0.11% max
- Specific additives	1.0% max

NOTES:

1) According to the required characteristics of the final soap bars.

2) Referred to the saponifiable matter.

.2.2 Multipurpose drying unit

Product characteristics:

- Physical aspect: free flowing flakes/chips.
- Thickness: 1 - 2 mm
- Water content: 5% for LABSNa
  10% for STS
  5% for SLS
  10% for SOAP
- Max. Hydrolisis (*): (expressed as free oil increase) 0,5% (0% expected when fed solution free alkali is 0,5% min.)
- Colour: no more than 20 °Klett higher than °Klett colour in the feedstock

(*) referred only to SLS product

2.3 CONSUMPTIONS

2.3.1 Fatty acids saponifications

Raw materials consumptions

Assuming as raw materials fatty acids having a saponification number equal to 215 and an unsaponificable matter content of 0.5%, the following consumptions are expected (referred to 1 ton of soap noodles 78% TFA produced).

- Fatty Acids	786 Kg
- Caustic soda (100%)	122 Kg

Utilities consumptions

The consumptions referred to 1 ton of neat soap are:

- Steam (1)	30 kg
- Electric power	16 kw

2.3.2 Multipurpose drying unit

Utilities consumption

- Steam (2 bar pressure)	Kg/h	100
- Cooling water (30°C inlet temperature, 3 bar pressure)	m3/h	60
- Instrument air (-20°C dew point, 6 bar pressure)	Nm3/h	10
- Installed power (estimated)	Kw	100

2.4 PROCESS DESCRIPTION

2.4.1 Fatty acids Saponification
(Ref.: Dwg. 92068.00.002)

The raw materials (fatty acids, caustic soda, salt solution and additives) are dosed by means of the multihead dosing pump 75P1 in the saponification loop.

The flow rate of each component is controlled by adjusting the piston strokes according to the raw materials characteristics and the final product (soap) characteristics.

The process water is dosed according to the desired content of fatty acids and the relevant operating conditions.

The saponification loop is constituted by the reactor 75MX1, the heat exchanger 75E1, the recycling pump 75P2.

The ingredients are mixed in the reactor 75MX1 where the saponification ration is carried out completely.

The excess of caustic soda is automatically controlled by the first pHmeter in the saponification loop.

The purpose of the heat exchanger is to supply to the reaction mixture the heat necessary to reach the optimum operating temperature.

The solution flows from the loop to the 2nd reactor 75MX2 where a small amount of fatty acids is added in order to obtain the required content of free alkalinity.

The amount of fatty acids is controlled by pH meter located at the outlet of the 2nd reactor.

A pressure control valve keeps the whole plant in pressure in order to avoid the evaporation of the water contained.

Downstream the pressure control valve, part of the water flashes due to the pressure drop.

The soap is delivered to neat soap tank 75V6 in order to be fed to the vacuum drying section to be concentrated at 78-80% as fatty acids.

The plant is extremely flexible due to the low residence time inside the saponification loop.

It is very easy to shift the production to a different kind of product by simply modifying the feeding composition.

It is very easy to reduce or increase the plant capacity by simply reducing or increasing the RPM of the metering pump.

2.4.2 Multipurpose drying unit
(Ref. dwg. No 92068.00.003)

This unit is based on a scraped film evaporator and operates under reduced pressure.

The feedstock is fed to the top of the machine; the product, dischanged from the bottom, is cooled and discharged as flakes/clips by a chilled roller mill.

Ballestra has developed this technology based on the use of scraped film evaporator for the concentration and drying of anionic surfactants (as such or preformulated). This technology has been already implemented in several projects in the Far East for the specific application of drying coconut-based fatty alcohol sulphates (CFAS).

In the pilot plant installed in Ballestra headquarters in Milan (approx. 100 Kg/h capacity), an extensive work has been carried out also on the following applications:

- Drying of "pure" and formulated ABSNa (i.e. 80% Active - 20% Builders)
- Concentration and drying of detergent slurries and anionic surfactants pastes
- Refining of SLES diluted/concentrated pastes (i.e.: for 1.4 Dioxane stripping)
- Drying/refining of various organic feedstocks
- Drying of soap

Other applications are also under investigation (preliminary tests already performed with positive results), including:

- Concentration/drying of methylester sulphonates
- Drying/flaking of tallow alcohol sulphates

The main advantages of this technology are the following:

- High efficiency in concentration/drying with minimum delta T between heating medium and process fluid
- Minimum residence time with narrow time distribution and homogeneous product phase.
- No side reactions
- High degree of drying of finished product (typical values of 5% and in same case, when required, less than 2% residual moisture)
- Easy operation (start-up/shut down/change over in few minutes thanks to minimized process residence time)
- High efficiency and reliability of mechanical equipment and process control
- Optimized thermal/energy efficiency
- Substantially no process losses (and possibility of partial/total reprocessing of condensed water)

CHAPTER V

PROCESS DESCRIPTION

Sodium Silicate Plant.

SUMMARY

1 - SOLID RAW MATERIALS FEED SYSTEMS

2 - LIQUID RAW MATERIALS AND UTILITIES FEED SYSTEMS

3 - MANUFACTURING SECTION

1 - SOLID RAW MATERIALS FEED SYSTEMS

(diagram AO 40054 000 S 003)

The solid raw materials are : sand and soda ash.

1.1. Sand section

The product reaches the silo S3 via the general feed circuit :

- feed hopper	B2
- conveyor belt	M1
- elevator	M2
- silo	S1
- vibrating extractor	M18
- conveyor belt	M3
- elevator	M4
- silo	S3

The loop can be decomposed in two parts :

The first one will permit the loading of the silo S1 ; the second will permit the loading of the hopper S3.

1.1.1. Loading of the silo S1

The limit is fed from the raw materials storage by means of a mechanical shower.

This silo is fitted with :

- one filter F1,
- one high level indicator LI 201,
- one high level alarm, consisting of the sensing element LSH 201 and of the alarm device LAH 201,
- one electrical heater SH S1,
- one vibrator VBR1,
- one register RE1.

The output of the silo is fitted with a vibrating extractor **M18** fitted with its vibrator, feeding the belt conveyor **M3**.

The control chain for the feeding of this silo consists of the following devices :

- **M1** : Belt conveyor
- **M2** : Elevator

During normal output operation, you don't use the vibrator **VBR1** and the electrical heater **SH S1**.

You will start manually this vibrator **VBR1** only if you have difficulties for the output of the sand.

You will start manually this electrical heater only if you have difficulties for the output and if the humidity of the sand is too much important.

The register **RE1** is only used if you have to isolate the silo from the vibrating extractor **M18**.

These equipments are used only for particular and exceptional conditions.

During normal operation, it is better to stop the feeding before you attain the high level.

This alarm is only a security.

If you unlock the signal, the loop will instantaneously stop.

1.1.2. Loading of the hopper S3

This hopper is fitted with :

- one high level alarm consisting of the sensing element LSH 203 and of the alarm device LAH 203,
- one low level alarm consisting of the sensing element LSL 204 and of the alarm device LAL 204,
- one vibrator VBR3,
- one register RE3.

The output of this hopper is fitted with a vibrating extractor M5 fitted with its vibrator feeding the weighing silo S5.

The control chain for the feeding of this hopper consists of the following devices :

- M18 : Vibrating extractor
- M 3 : Belt conveyor
- M 4 : Elevator

The register RE3 is only used if you have to isolate the hopper from the vibrating extractor M5.

This equipment is used only for particular and exceptional conditions.

The high level alarm stops the loop.

The low level alarm starts it again.

Remark : You can start the feeding of the hopper when the product is located between the high and low levels.

1.2. Soda ash section

The product reaches the silo S4 via the general feed circuit :

- big bags opener PDE 10
- screw conveyor SC10
- elevator M 13
- silo S2
- redler M 14
- elevator M 15

The loop can be decomposed in two parts :

The first one will permit the loading of the silo S2 ; **the second** will permit the loading of the hopper **S4.**

1.2.1. Loading of the silo S2

The unit is fed from the raw matérials storage by means of a mechanical shovel.

The storage of the soda ash is realized into big bags.

After taking the big bags to the storage, the mechanical shover will bring them up to the big bags openers **PDE 10.**

This silo is fitted with :

- one filter F2,
- one high level indicator LI 202,
- one high level alarm consisting of the sensing element LSH 202 and of the alarm device LAH 202,
- one vibrator VBR2,
- one register RE2.

The output of the silo is fitted with the redler **M14.**

The control chain for the feeding of this silo consists of the following devices :

- **SC 10** : Screw conveyor
- **M 13** : Elevator

During normal operation you start manually the vibrator **VBR6** before you begin the feeding of the big bag opener **PDE 10.**

When you decide to stop the feeding of this silo, you must stop this vibrator.

The register **RE2** is only used if you have to isolate the silo from the redler **M 14.**

During normal output operation, you don't use the vibrator **VBR2.**

You will start manually this vibrator **VBR2** only if you have difficulties for the output of the soda ash.

During normal operation it is better to stop the feeding before you attain the high level.

This alarm is only a security.

1.2.2. Loading of the hopper S4

This hopper is fitted with :

- one high level alarm consisting of the sensing element LSH 205 and of the alarm device LAH 205,
- one low level alarm consisting of the sensing element LSL 206 and of the alarm device LAL 206,
- one register RE4.

The output of this hopper is fitted with a vibrating extractor M6 fitted with its vibrator feeding the weighing silo S5.

The control chain for the feeding of this hopper consists of the following devices :

- **M 14** : Redler
- **M 15** : Elevator

The register **RE4** is only used if you have to isolate the hopper from the vibrating extractor **M6**.

This equipment is only used for particular and exceptional conditions.

The high level alarm stops the loop.

The low level alarm starts it again.

<u>Remark</u> : You can start the feeding of this hopper when the product is located between the high and low levels.

2 - LIQUID RAW MATERIALS AND UTILITIES FEED SYSTEMS

(diagram AO 40054 000 S 003)

2.1. Filtered water

Reaches the battery limits at a pressure of 3 bar and notably feeds the following :

- blender BL1
- solidification belt M11

A small part of this water is to damp down dust during the blending.

The most important part is used for the forced cooling of the solidification belt.

The pressure gauge PI 410 indicates the pressure of the line.

The valve at the battery limit makes it possible to cut off this feed line.

2.2. Compressed air

Reaches the battery limits at a pressure of 5 bar and notably feeds the following :

- shutter box BV1
- vibrator VBR 6
- casque CS1
- pneumatic valve EV BL1
- burner GT1

Refer to the pressure gauge PI 411 for the pressure of the line.

The valve at the battery limit makes it possible to cut off this feed line.

2.3. Fuel oil

Coming from the factory pipe, the fuel oil enters the plant to the storage tank B1 from the general storage plant via the pump P1.

The temperature of this fuel oil is about 50-60°C and the pressure 3 bar (effective).

This pipe will be fitted with tracing and heat insulation.

The storage tank B1 is fitted with :

- one outside level indicator LI 210,
- one high level alarm consisting of the sensing element LSH 207 and of the alarm device LAH 207,
- one low level alarm consisting of the sensing element LSL 208 and of the alarm device LAH 208,
- one electrical heater SHB 1,
- one temperature indicator TI 107,
- one thermostat TS 106.

The high level alarm stops the pump P1.

The low level alarm starts it again.

So, it is necessary to maintain the tracing to the feeding pipe.

Remark : You can start the feeding of this tank when the liquid is located between the high and low levels.

The electrical heater will maintain the temperature between 50 and 60 degrees.

3 - MANUFACTURING SECTION

3.1. Mixture conditioning and storage section

This section includes :

- the weighing,
- the blending,
- the storage of the mixture.

3.1.1. Description of the installation

The weighing system is designed to weigh batches of raw materials soda ash and sand.

After selecting the weight ratio, the two raw materials are successively weighed automatically by the two extracting vibrators M6 and M5.

The weighing silo S5 receive, at first the soda ash, and then the sand.

When a batch is weighed, the products fall down into the blender BL1 where they are mixed.

After a few minutes of blender rotation, the blender changes its direction of rotation and the mixture come off the blender.

The mixture is then conveyed by the handling line to the blend silos S6A or S6B.

3.1.2. Functioning of the installations

In normal operation select the blend silo with the slide box BV1 before starting the weighing system.

The weighing silo S5 is fitted with one cask CS1.

When the vibrating extractors are in operation, the cask is closed.

At first the soda ash vibrating extractor M6 starts. When it stops, after a time delay, the sand vibrating extractor M5 starts. When it stops, the weighing is finished.

After the blender BL1 starts in the blending rotation direction the cask will be open.

All these operations are made automatically.

The weight ratio is made with the two coding wheels on the board of the control room.

The blender BL1 is fitted with :

- two rotation way,
- one vibrator VBR4 on the inlet chute,
- one spraying system for water,
- one grill to the lumps output.

At first the blender starts for the mixture rotation way :

- the cask CS1 opens,
- the spraying system starts,
- the vibrator VBR4 starts.

When the weighing silo S5 is empty, the weighing section gives the order for the cask closing. The vibrator VBR4 stops also.

The weighing system can start again.

The blending made, after a time delay, the blender will start in the discharge rotation direction.

The mixture is rehandled by elevator M8 and conveyor M7 to the blender silos S6A or S6B.

These two silos S6A and S6B are fitted with :

Silo S6A :
- one high level alarm, consisting of the sensing element WIQSH 702 and of the alarm device WIQAH 702.
- one very high level alarm, consisting of the sensing element WIQSHH 702 and of the alarm device WIQAHH 702
- one register RE5.

Silo S6B :
- one high level alarm consisting of the sensing element WIQSH 703 and of the alarm device WIQAH 703
- one very high level alarm consisting of the sensing element WIQSHH 703 and of the alarm device WIQAHH 703
- one register RE6

The output of these two silos are fitted respectively with a vibrating extractor M9A and M9B each one fitted with its vibrator, loading the feeding machine M10.

The control chain for the feeding of these silos consists of the following devices.

- BV1 slide box
- WIQ 701 weighing system
- M6 soda ash vibrating extractor with VBR3 vibrator
- M5 sand vibrating extractor
- CS1 cask
- BL1 blender
- VBR4 vibrator
- EV BL1 water electrovalve
- M8 elevator
- M7 belt conveyor

The complete cycle wear is about seven (7) minutes. After the first cycle, the weighing is done in the same time than the mixting and the discharge.

For details of the working, refer to the electricity technical specification 40054 B EL 801 MP 001.

In permanence you have in the control room the weight of mixture contained in the silos S6A and S6B.

So, before you start a new melting cycle, you must check you have enough mixture.

The registers RE5 and RE6 are only used if you have to isolate the blender silos S6A or S6B respectively from the vibrating extractor M9A or M9B.

The level control and safeties are as follow :

- the light of the signal high level in control room forestalls the operator he has to stop the feeding soon,

- the very high level stops the chain after

3.2. Manufacturing section

(P & I AO 40054 000 S 003)

3.2.1. General data

The HOECHST process for the manufacturing sodium silicate can be summed up by the equation :

$$nSiO_2 + Na_2CO_3 \longrightarrow nSiO_2, Na_2O + CO_2$$

This reaction takes place in the rotary kiln **VT1.**

The neutralization ratio is given by the weight ratio :

$$\frac{SiO_2}{Na_2O}$$

3.2.2. General diagram

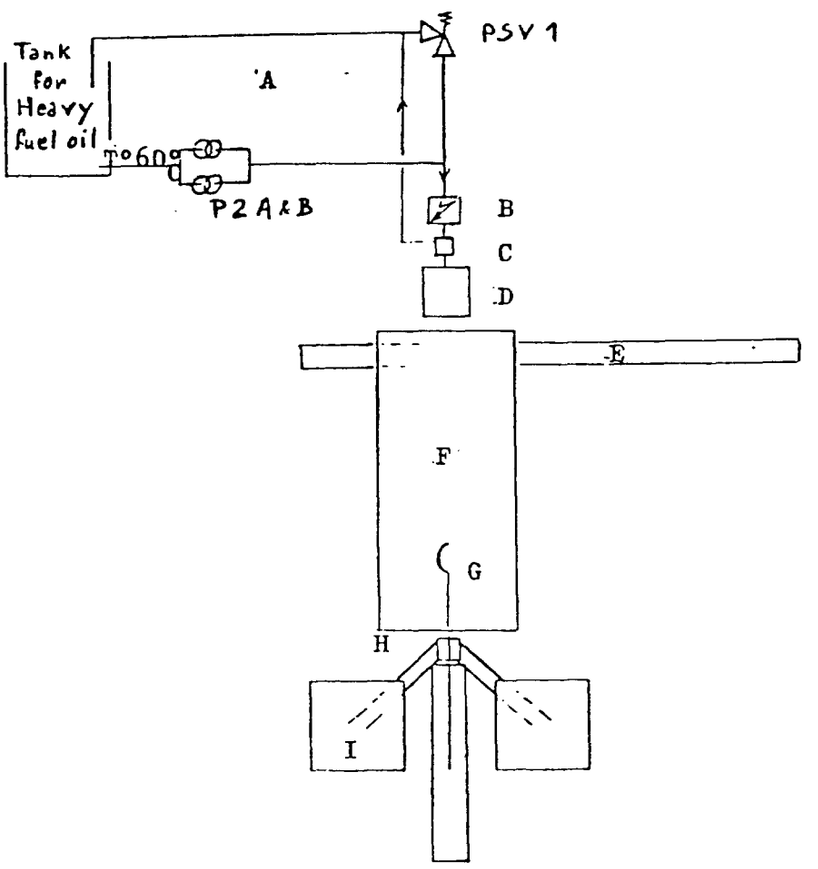

A	=	Heavy fuel oil loop, with electrical tracing
P2A&B	=	Booster pumps, fuel-oil circuit and filtration
PSV1	=	Taring valve, fuel oil circuit
B	=	Filtration and electric heater
C	=	Pressure reducing unit and fuel oil metering - compressed air injection and scavenging (PC 407)
D	=	Burner on trolley (GT1)
E	=	Casting line (M11)
F	=	Rotary kiln (VT1)
G	=	Feeding machine (M10)
H	=	Vibrating chutes (M9A & M9B)
I	=	Loading hoppers (S6A & S6B)

3.2.3. Rotary kiln VT1

The furnace receives :

- the blender from the feeding machine in one side
- the hot gas from the burner GT1 in the other side.

3.2.3.1. Description of the rotary kiln

- diameter : 2.6 m
- length : 10.6 m
- rotation speed : 0.55 rpm

For more technical characteristics, refer to the technical specification 40054 GC 801 ST 001.

It is fitted with :

- internal equipment composed of refractory concrete and bricks (see technical specification 40054 GC 801 ST 110)
- four casting holes for the discharge of silicate production
- one reinforcing plate for receiving the burner
- one smoke box fitted with a chimney an with an air blast regulator.

This regulator allows to obtain a lower smoke temperature (about 400°C).

The driving system is designed use the two rotation way.

Remark : An emergency manual drive is mounted on a available shaft of the reducer.

Stand-by manual device for the kiln rotation

Diagram

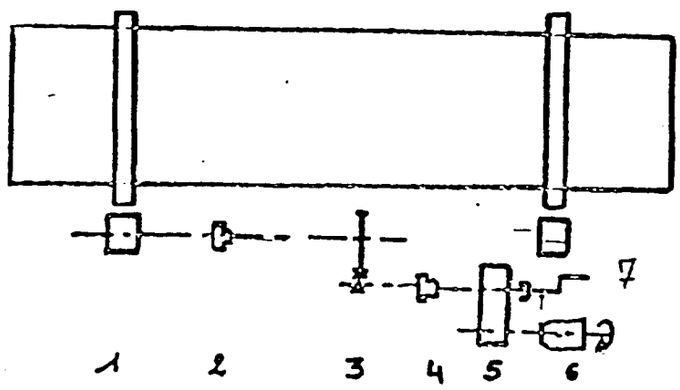

(1) Kiln driving roller
(2) Coupling
(3) Reducing gear
(4) Coupling
(5) Reducer
(6) Motor
(7) Crank

Should an incident occur, it could be necessary to change the kiln, as follows :

1) Switch off the driving motor
2) Insert the tappet of the crank
3) Turn the crank
4) Disengage the crank as the kiln is positioned.

The temperature of the smoke box (TI 101) and of the stack (TI 102) are given in the control room.

They are very important and they permit to know if we have a good melting.

The kiln is also equipped with heat proof panels particularly used as screen in the casting area.

see : Corrections of the. 24 march 1986.

3.2.3.2. Operating process

- Duration of the cycle : 4 hours
- Tonnage of mixture loaded into the kiln :

SILICATE W.R	2.15	3.35
- tonnage of total mixture/24 h	42	40
- tonnage per 4 h cycle	7	6.7

Above-indicated values have been round up.

Melting Process :

EVENT	Time	Fuel-oil flowrate (in l/hr)	Burner index*	
			Fuel-oil	Air
Loading				
. Mini burner	0'	165 to 175	4.25	2
. Average burner	10'	235 to 245	5.5	3.25
. Maxi burner	20'	295 to 305	6.7	4.25
End of loading	45'			
Casting	2h30			
. average burner	2h40	235 to 245	5.5	3.25
. mini burner	3h20	165 to 175	4.25	2
Loading	4h			

Times indicated can be subject to changes. They depend on the kind of mixture, of the viscosity of the bath, of the viscosity of the casting chain and of the general state of the kiln during the casting.

- Fuel-oil pressure in burner : approximately ~~0.5 bar~~ 0,7/0,8
- Shape of the flame : long
- Air inlet throttle (V4) : total opening
- Burner positioning : 1.5 to 2 cm of rotary throat
- Casting holes : diameter 60 to 45 for Na 2.15
  80 to 65 for Na 3.35

* Data concerning AIR and FUEL-OIL index are simply given as indication and corresponds to the burner operation under some conditions : viz. - internal clearance movable nose/stationary nose
  - fuel-oil feed pressure as a function of its quality

3.2.3.3. Loading of the rotary kiln

The feeding machine M10 is designed to load batches of blending.

The moving cup, of the feeding machine, collects the blend at the outlet of the blending silo S6A and S6B via the vibrating extractor M9A or M9B.

Then the cup introduces the mixture into the rotary kiln, (the lilting will occur on the last meter of its stoke), and after will come back to the loading position for a new cycle.

For the technical characteristics of this feeding machine, refer to the technical specification 40054 GC 801 ST 103.

All these operations are made automatically.

The starting is given from a local control board TB 04.

The control chain for the loading of the furnace VT1 consists of the following devices :

- M9A or M9B Vibrating extractors
- VBR5 Vibrator
- M10 Feeding machine

Remark : In case of immobilization of the loading cup inside the kiln, it will be necessary to remove it manually.

Arrangement for extraction by hand of the loading arm of the feeding machine

Diagram

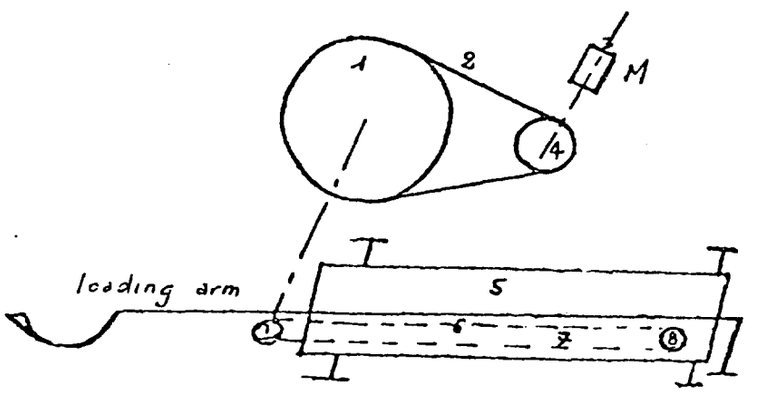

(1) Main pulley
(2) Belt
(3) Brake motor
(4) Driving pulley
(5) Trolley
(6) Trolley driving chain
(7) Link Chain/Trolley
(8) Pinion - belt tension/return

For doing this :

1) Switch off the motor (3)
2) Remove the casing protecting the main pulley (1).

Note : This casing must be simply fastened so as to be very quickly removable without any tool.

3) Remove the belts
4) By means of a bar engaged in the spokes of the pulley (1), cause the backward move of the loading arm.

3.2.3.4. Discharge of the rotary kiln

Once correct melting of the blend, is obtained,open one or two casting hole on the rotary kiln.

The melted sodium silicate falls on the M11 solidification belt which is cooled by means of water.

This water cods the solidification belt and allows good solidification of the silicate.

In fact, the cooling of the solidification belt ensures that the temperature of the silicate will fall under the setting point.

Description of the solidification belt :

- length = 16.8 m
- linear speed = 4.4 m/min.

For more technical characteristics, refer to the technical specification 40054 GC 801 ST 112.

This solidification belt is fitted with :

- lubrification box on each driving chain
- spraying nozzles on the return strand (each spraying lin will be fitted with its shut off valve)
- two systems of fixation
- one steel plate at the silicate output

At the output, the glass fragments are picked up by the mechanical shovel and brought to the storage area.

The cooling water is collected in a sump. The vertical pump P3 allows this water to be discharged to the battery limit of the plant.

Remark : - Near to the driving system, the solidification belt has a local panel fitted with a speed variator.
If necessary, use it for adjusting the linear speed of the solidification belt during the silicate casting.

- For the opening of the casting holes, the operator will use a pick (refer chapter VIII, § 2.3.1).

- For the discharge of the rotary kiln it may be necessary to moderate the casting in introducing the end of a bar into the casting hole (refer to chapter VIII , § 2.3.1).

3.3. Hot gas generator GT1

3.3.1. General data

The hot gas generator GT1 is fed with heavy fuel oil N°2 via the pumps P2A and P2B (one in operation, one in stand by) at the proper conditions of pressure and temperature and with ambient air coming via the blower V1.

3.3.2. Burner

Proportioning burner STEIN consist of the burner with :

- furnace mounting plate
- mounting bracket
- protecting shutter
- induced air control sleeve
- air shut off valve
- micrometering oil regulating valve
- control level connection
- oil pressure gauge
- oil pressure regulator

For more details, refer to STEIN operating instructions.

With this kind of burner, it's possible to obtain a turndown ratio of 5 to 1 in fixing capacity, and maintain perfectly the oil atomization over this entire range.

The fuel flow rate is controlled with the automatic valve SV 901.

The feeding lines of the burner are fitted with two safety devices, which can close this valve.

They consist of the following instruments :

- **PSL 401** Pressure control switch on the fuel line
- **PSL 402** Pressure control switch on the air circuit.

If the air pressure is too low (for example with current failure) :

The instrument **PSL 402** Pressure control switch :

- close the valve **SV 901**
- open the air automatic valve **SV 902**

for the cleaning of the fuel line.

Remark : The burner is connected with the fuel feeding line with a flexible hose **FL1** . Between the furnace and the burner, we find two refractory blocks, one **G1** is associate with the burner the other **G2** , with the rotary kiln (refer to the diagram of the fuel preparating unit).

3.3.2.1. Fuel conditioning

From the storage tank B1, fuel arrives to the burner via the pumps P2A or P2B, one of them as stand by.

Booth pumps are provided with a safety valve.

In case the fuel oil pressure would be too low, a safety set up consisting of the pressure controller PSL 401 would closed the valve SV 901.

The manometer PI 403 show the pump discharge pressure.

Further along the line there is the preheating system.

It consists of the electrical heaters R1,R2 and R3 where the following set up adjusts the fuel oil temperature :

- **TS 103** Temperature switch
- **TW 103** Thermometer

The local indicator TI 405 gives the temperature.

The fuel oil viscosity must be maintained constant as much as possible from 2.4 to 2.6° Engler, that will require to regulate the temperature of the fuel-oil between 100 and 125°C depending on its quality.

The temperature of the fuel oil is consequently an important characteristics of the proper operation of the burner, as regards the constancy of flow rates and of the injection, therefore of the combustion.

This line is also fitted with :

- Filters F3,F4,F5
- Safety valves PSV 1 and PSV 2
- Air trap B4
- One pressure reducer PC 407
- One flow meter FQI 301
- One air inlet line fitted with the solenoïd valve SV 902
- One fuel oil solenoïd valve SV 901
- One recycled fuel line to the storage tank.

The fuel preparating line is fitted as follow :

The temperature of the line is maintained by the electrical tracing.

A signalisation in the control room prevent if insufficiency.

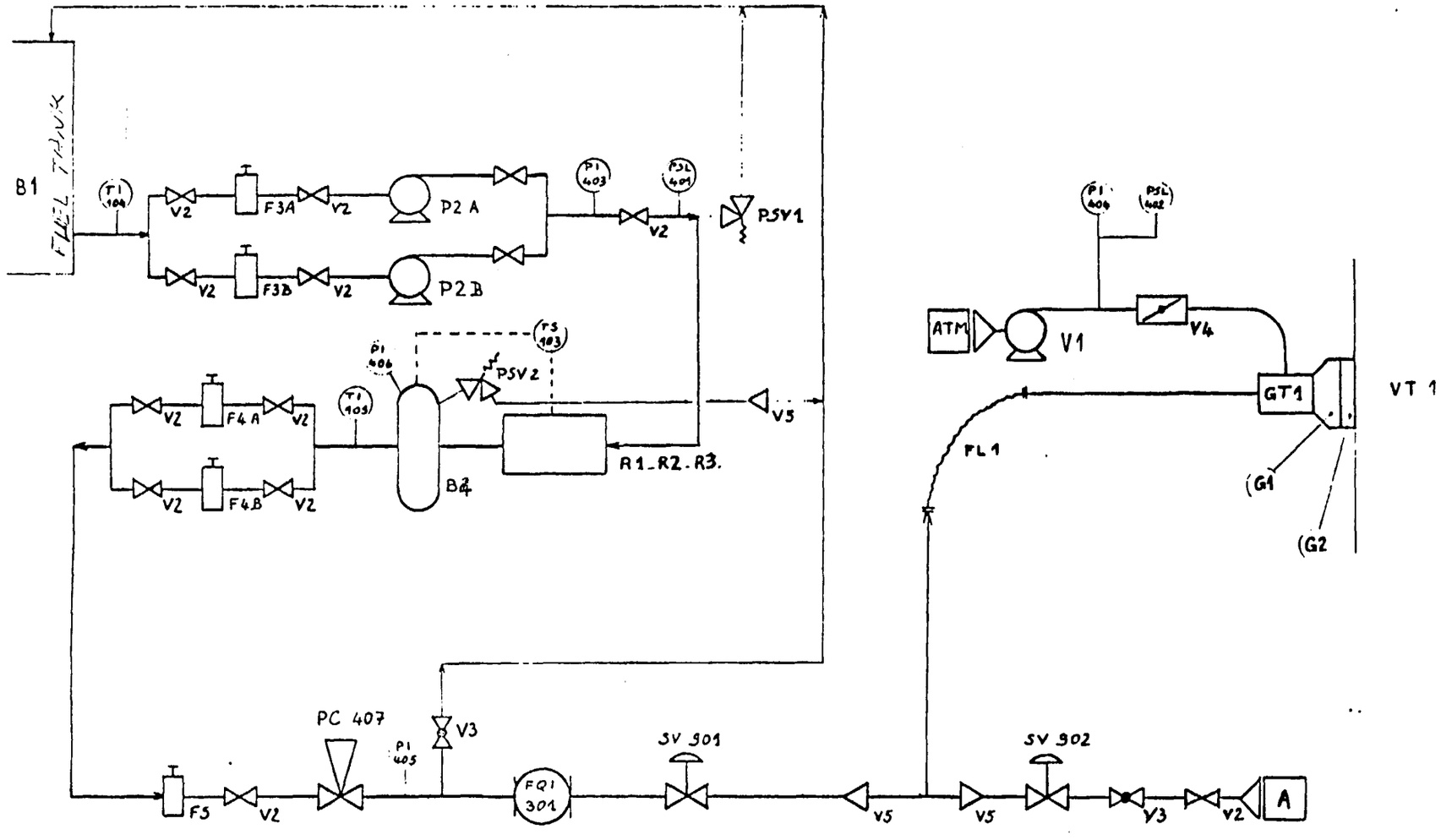
B1
TI 104
V2
F3A
P2 A
F3B
P2 B
PI 403
PSL 401
PSV1
V5
PI 406
PSV2
TS 103
TI 103
F4 A
F4 B
B4
R1_R2_R3.
PI 404
PSL 402
ATM
V1
V4
GT1
VT 1
FL 1
G1
G2
PC 407
PI 405
V3
FQ1 301
SV 901
SV 902
F5
A

B4	Air trap
P2A & P2B	Fuel pumps
F3A & F3B	Filters
F4A & F4B	Filters
F5	Filter
G1	Refractory block (with the burner)
G2	Refractory block (with the rotary kiln)
GT1	Burner
R1-R2-R3	Fuel heaters
V1	Ventilator blower
V2	Shut off valve
V3	Valve with drilled orifice
V4	Butterfly valve
V5	Non return valve
PSV 1	Pressure relief valve
PSV 2	Pressure relief valve
PC 407	Pressure reducer
SV 901	Fuel oil Solenoïd valve
SV 902	Air Solenoïd valve
FQI 301	Flow meter
FL1	Flexible hose

3.3.2.2. Air circuit

Refer to the preceding diagram.

It's composed with :

- one blower fan **V1**
- one throttle valve **V4.**

This line is fitted with :

- **PSL 402** Pressure control switch
- **PI 404** Pressure indicator.

3.2.2.3. Other equipments

The burner and the blower are fixed on a trolley.

The burner is adjustable in the height, translation and rotation way.

The trolley is on two rails, and can move forwards and backwards.

The fuel storage tank B1 is fitted with :

- one high level alarm consisting of the sensing element **LSH 207** and of the alarm device **LAH 207**

- one low level alarm consisting of the sensing element **LSH 208** and of the alarm device **LAL 208**

- one electrical heater **SHB 1**

- one temperature indicator **TI 107**

- one level indicator **LI 210**

The temperature regulation is made with the temperature switch **TS 106.**

3.4. Silicate bagging

The silo S7 is fed from the silicate storage area by means the mechanical showel (use the same one as for the raw materials feeding) via the hopper B3, the extracting beltM19 and the belt M16.

This silo is fitted with :

- one high level alarm consisting of the sensing element LSH 209 and of the alarm device LAH 209

- one register RE7

The output of the silo is fitted with a vibrating extractor M20 fitted with its vibrator feeding the bag feeder weigher SF1.

When the woven bags are full, they fall down on the belt conveyor M17 on which they are sewed by the sewing machine SM1.

After the bags are sent to the storage area.

Appendix C

Overview of the Regulations Applicable to the JSC Discharge

APPLICABLE REGULATORY CRITERIA

Current Status of Environmental Regulations in Jordan:

In order to assess Jordan Sulpho-Chemicals (JSC) compliance with applicable Jordanian standards and regulations, it is of importance at this stage to present an overview of Jordan's environmental protection control laws, standards, and regulations. Interestingly, Jordan has no comprehensive law to control water, air, and soil pollution. However, a Jordanian Environment Act (JEA) was drafted two years ago to achieve the principle objectives mentioned in the National Environment Strategy (NES) for Jordan. JEA is currently awaiting approval from the Parliament.

In general, the nature of water pollution standards and regulations in Jordan vary according to sources. Industrial wastewater discharges are regulated by the Jordanian standard specification number 202 (Table C-1) adopted in 1981 by the Department of Standards and Specifications (DSS) and revised in 1990. Standard 202 regulates industrial wastewater discharges to rivers, wadis, groundwater, the sea, and reuse for irrigation. This standard covers 37 pollutant parameters and sets maximum allowable concentration limits of pollutants in the discharged industrial wastewater effluents. Moreover, the standard also contains narrative conditions to protect public health, aquatic life, worker health; and groundwater quality. The standard is not associated with a permitting mechanism and therefore is self-implementing.

Drinking water quality is regulated by the Jordanian standard number 286. Tables C-2a - C-2e present quantitative requirements of pertinent characteristics including physical, chemical , radiation , and health related issues. With regards to regulations related to the quality of treated domestic wastewater to be reused in irrigation, Jordan has neither standards nor guidelines. However, it is a common practice to use the Food and Agriculture Organization (FAO) and World Health Organization (WHO) Guidelines as a reference .Tables C-3 through C-5 are related to the quality of treated domestic wastewater effluents

to be reused in irrigating agricultural crops. The remaining tables C-6 - C-12 present the tolerance and sensitivity of crops to salinity and other specific ions like Sodium, Boron and Chloride. These are adapted from the FAO Guidelines (1985). Treated domestic wastewater is regulated by the Jordanian Standard 893 (Table C-13) adopted in 1994 by DSS. Regarding air pollution, Jordan does not have any existing standards or regulations to control air pollution.

Regulations Applicable to the JSC Discharges:

The JSC is not connected to the public sewer system due to being located in a remote area. During the course of conducting an environmental pollution prevention/waste minimization audit of the JSC, the audit team identified two wastewater discharges. One of these discharges is purely industrial wastewater effluent. However, this effluent is composed of all wastewater streams originating from various production units of JSC.

The other wastewater effluent is associated with the R.O system reject. This effluent (approx. 21 cubic meter) is currently being used by a nearby farm. The Jordanian Standard 202 is also used to regulate industrial wastewater which may recharge groundwater.

Table C-1

Summary of requirements of Jordan Standard 202/1991 for disposal of industrial effluents.

Parameter	Maximum Allowable Limit, (mg/l)+			
	Disposal To			
	Wadis & Rivers	Sea	Groundwater Recharge	Reuse for Irrigation**
BOD5	50M	-	50M	-
COD	150M	200	150M	-
DO	1*	5*	1*	1*
TDS	3000(1)	-	1500 (1)	2000 (2)
TSS	50	-	-	100 (3)
pH (su)	6.5-9.0	5.5-9.0	6.5-9.0	6.5-8.4
Color (unit)	15	75	15	-
TC	-	4	-	-
FOG	5	10	Absent	5
Phenol	0.002	1	0.002	0.002
MBAS	25		15	-
NO3-N	12 (4)	-	12 (4)	30
NH3	5	12	5	5
T-N	-	125	-	50
PO4-P	15	-	-	-
Cl	500	-	500	350 (3)
SO4	500	-	500	400
F	1.5	-	1.5	-
HCO3	-	-	-	500
Na	-	-	400	-
Mg	-	-	-	-
Ca	-	-	-	-
SAR	-	-	-	9
Al	5	-	0.3	5
As	0.05	0.1	0.05	0.1
B	1	-	1	1 (5)
Cr	0.1	0.3	0.05	0.1
Cu	2	0.1	2	0.2
Fe	1	2	1	5
Mn	0.2	0.2	0.2	0.2
Ni	0.2	0.02	0.1	0.2
Pb	0.1	0.1	0.1	1
Se	0.02	0.02	0.05	0.02
Cd	0.01	0.07	0.02	0.01
Zn	15	-	15	2
CN	0.1	1	0.1	0.1
Hg	0.001	0.001	0.001	0.001
TCC MPN/100ml		5000	-	-
TFCC MPN/100ml	1000(6)	-	1000 (6)	1000 (6)
Nematodes	< 1	-	-	< 1

(+) All units are in mg/l except where noted.
(*) Minimum value.
(**) Depends upon, type and quantity of crops, irrigation methods,soil type, climate & groundwater in the area concerned.
(-) Undetermined.
(M) Monthly average.

Notes:

(1) TDS allowable limit is subject to the TDS concentration in the water supply and the water basin affectd.
(2) Allowable limits of wastewater reuse determine the degree of restriction (none, slight to moderate, or severe).
(3) Method of irrigation is determined by wastewater quality being used.
(4) Nitrate concentrations allowed are determined by its concentrations in the affected water basin.
(5) Could reach 3 mg/l.
(6) Geometric mean.

Table C-2a
Jordanian Drinking Water Standards
A: Physical characterstics

Parameter	Permissible Limit	Max. allowable conc. in case no better source is available
Taste	aesthetically acceptable	-
Odor	aesthetically acceptable	-
Color	10 units	15 units
Turbidity	1 unit (JCU)	5 units
pH	6.5 < pH < 9	-
Temperature	8 - 25 c	-

Table C-2b

Jordanian Drinking Water Standards
B: Chemical Charecterstics

Parameter	Max. Allowable Conc. mg/l
Pb	0.05
Se	0.01
As	0.05
Cr	0.05
CN	0.1
Cd	0.005
Hg	0.001
Sb	0.01
Ag	0.01

Table C-2c
Jordanian Drinking Water Standards
C: Health related

Parameter	Permissible Limit mg/l	Max. allowable conc. in case no better source is avialable	Effects within max. allowable limits
TDS	500	1500	aesthetic
TH(CaCO3)	100	500	aesthetic
ABS	0.5	1	indicator
Al	0.2	0.3	aesthetic
Fe	0.3	1	aesthetic
Mn	0.1	0.2	aesthetic
Cu	1	1.5	aesthetic
Zn	5	15	aesthetic
Na	200	400	aesthetic
Ni	0.05	0.1	health
Cl	200	500	aesthetic
F	1	1.5	health
SO4	200	500	aesthetic
NO3	45	70	health

Table C-2d

Jordanian Drinking Water Standards
D: Radiation

Parameter	Maximum limit Bq/l
Alpha-emitters (except for Radon)	0.1
Beta-emitters	1

Table C-2e

Jordanian Drinking Water Standards
E: Organic pollutants*

Parameter	Max. Permissible Conc. mg/l
A) Chlorinted Hydrocarbons	
Endrin	0.0002
Lindane	0.004
Methoxychlor	0.1
Toxaphene	0.005
B) Chlorophenoxys	
2,4-D	0.1
2,4,5-TP (Trichlorophenoxy propionic acid)	0.01

* Other organic pollutants should not exceed the max. allowable limit set by WHO.

Table C-3

Guidelines for interpretations of water quality for irrigation (1)

Potential irrigation problems	Units	Degree of restriction on use: None	Slight to moderate	Severe
Salinity (affects crop water availability) (2)				
EC_w (or)	dS/m	< 0.7	0.7 - 3.0	> 3.0
TDS	mg/l	< 450	450 - 2000	> 2000
Infiltration (affects infiltration rate of water into the soil. Evaluate using (EC_w and SAR together) (3)				
SAR = 0-3 and EC_w	=	> 0.7	0.7 - 0.2	< 0.2
= 3-6	=	> 1.2	1.2 - 0.3	< 0.3
= 6-12	=	> 1.9	1.9 - 0.5	< 0.5
= 12-20	=	> 2.9	2.9 - 1.3	< 1.3
= 20-40	=	> 5.0	5.0 - 2.9	< 2.9
Specific ion toxicity (affects sensitive crops)				
Sodium (Na) (4)				
Surface irrigation	SAR	< 3	3 - 9	> 9
Sprinkler irrigation	me/l	< 3	> 3	
Chloride (Cl) (4)				
Surface irrigation	me/l	< 4	4 - 10	> 10
Sprinkler irrigation	me/l	< 3	> 3	
Boron (B) (5)	mg/l	< 0.7	0.7 - 3.0	> 3.0
Trace elements(see table E4)				
Miscellaneous effects (affects susceptible crops)				
Nitrogen (NO3-N) (6)	mg/l	<5	5 - 30	> 30
Bicarbonate (HCO3) (Overhead sprinkling only)	me/l	< 1.5	1.5 - 8.5	> 8.5
pH			Normal range 6.5 - 8.4	

(1) Adapted from University of California Committee of Consultants 1974.
(2) ECw means electrical conductivity, a measure of the water salinity, reported in deciSiemens per metre at 25C^0 (dS/m) or in units millimhos per centimeter (mmho/cm). Both are equivalent. TD^S means total dissolved solids, reported in milligrams per liter (mg/L).
(3) SAR means sodium adsorption ratio. SAR is sometimes reported by the symbol RNa. At a given SAR, infiltration rate increase as water salinity increases. Evaluate the potential infiltration problem by SAR as modified by ECw.
(4) For surface irrigation, most tree crops and woody plants are sensitive to sodium and chloride; use the values shown. Most annual crops are not sensitive. With overhead sprinkler irrigation and low humidity (<30 percent), sodium and chloride may be absorbed through the leaves of sensitive crops.
(5) For borm tolerances, see Tables 16 and 17.
(6) NO3-N means nitrate nitrogen reported in terms of elemental nitrogen (NH4-N and Organic-N should be included when wastewater is being tested).

Assumptions in the Guidelines

The water quality guidelines in Table 1 are intended to cover the wide range of conditions encountered in irrigated agriculture. Several basic assumptions have been used to define their range of usability. If the water is used under greatly different conditions, the guidelines may need to be adjusted. Wide deveations from the assumptions might result in wrong judgements on the usability of a particular water supply, especially if it is a borderline case. Where sufficient experience, field trials, research or observations are available, the guidelines may be modified to fit local conditions more closely.

The basic assumptions in the guidelines are:

Yield Potential: Full production capability of all crops, without the use of special practices, is assumed when the guidelines indicate no restrictions on use. A "restriction on use" indicates that there many be a limitation in choice of crop, or special management may be needed to maintain full production capability. A "restriction on use" does not indicate that the water is unsuitable for use.

Site Conditions: Soil texture ranges from sandy-loam to clay-loam with good internal drainage. The climate is semi-arid to arid and rainfall is low. Rainfall does not play a significant role in meeting crop water demand or leaching requirement. (In a monsoon climate or areas where precipitation is high for part or all of the year, the guideline restrictions are too severe. Under the higher rainfall situations, infiltrated water from rainfall is effective in meeting all or part of the leaching requirement.) Drainage is assumed to be good, with no uncontrolled shallow water table present within 2 metres of the surface.

Methods and Timing of Irrigations: Normal surface or sprinkler irrigation methods are used. Water s applied infrequently, as needed, and the crop utilizes a considerable portion of the available stored soil-water (50 percent or more) before the next irrigation. At least 15 percent of the applied water percolates below the root zone (leaching fraction [LF] ≥ 15 percent). The guidelines are too restrictive for specialized irrigation methods, such as localized drip irrigation, which results in near daily or frequent irrigations, but are applicable for subsurface irrigation if surface applied leaching satisfies the leaching requirements.

Water Uptake by Crops: Different crops have different water uptake patterns, but all take water from wherever it is most readily available within the rooting depth. On average about 40 percent is assumed to be taken from the upper quarter of the rooting depth, 30 percent quarter, 20 percent from the third quarter, and 10 percent from the lowest quarter. Each irrigation leaches the upper root zone and maintains it at a relatively low salinity. Salinity increases with depth and is greatest in the lower part of the root zone. The average salinity of the soil-water is three times that of the applied water and is representative of the average root zone salinity to which the crop responds. These conditions result from a leaching fraction of 15-20 percent and irrigations that are timed to keep the crop adequately watered at all times.

Salts leached from the upper root zone accumulate to some extent in the lower part but a salt balance is achieved as salts are moved below the root zone by sufficient leaching. The higher salinity in the lower root zone becomes less important if adequate moisture is maintained in the upper, "more active" part of the root zone and long-term leaching is accomplished.

Restriction on Use: The "Restriction on Use" shown in Table 1 is divided into three degrees of severity: none, slight to moderate, and severe. The divisions are somewhat arbitrary since change occurs gradually and there is no clear-cut breaking point. A change of 10 to 20 percent above or below a guideline value has little significance if considered in proper perspective with other factors affecting yield. Field studies, research trials and observations have led to these divisions, but management skill of the water user can alter them. Values shown are applicable under normal field conditions prevailing in most irrigated areas in the arid and semi-arid regions of the world.

BEST AVAILABLE COPY

Table C-4
Recommended maximum concentrations of trace elements in irrigation water (1)

Element	Recommended maximum concentration(2) (mg/L)	Remarks
Al (aluminium)	5.0	Can cause non-productivity in acid soils (pH < 5.5). but more alkaline soils at pH > 7.0 will precipitate the ion and eliminate any toxicity.
As (arsenic)	0.10	Toxicity to plants varies widely, ranging from 12 mg/L for Sudan grass to less than 0.05 mg/L for rice.
Be (beryllium)	0.10	Toxicity to plants varies widly, raning from 5 mg/L for kale to 0.5 mg/L for bush beans.
Cd (cadmium)	0.01	Toxic to beans beets and turnips at concentrations as low as 0.1 mg/L in nutrient solutions. Conservative limits recommended due to its potential for accumulation in plants and soils to concentrations that may be harmful to humans.
Co (cobalt)	0.05	Toxic to tomato plants at 0.1 mg/L in nutrient solution. Tends to be inactivated by neutral and alkaline soils.
Cr (chromium)	0.10	Not generally recognized as an essential growth element. Conservative limits recommended due to lack of knowledge on its toxicity to plants.
Cu (copper)	0.20	Toxic to a number of plants at 0.1-1.0 mg/L in nutrient solutions.
F (fluoride)	1.0	Inactivated by neutral and alkaline soils.
Fe (iron)	5.0	Not toxic to plants in aerated soils. but can contribute to soil acidification and loss of availability of essential phosphorus and molybdenum. Overhead sprinkling may result in unsightly deposits on plants, equipment and buildings.
Li (lithium)	2.5	Tolerated by most crops to 5 mg/L, mobile in soil. Toxic to citrus at low concentrations (<0.075 mg/L). Acts similarly to boron.
Mn (manganeses)	0.20	Toxic to a number of crops at a few-tenths to a few mg/L, but usually only in acid soils.
Mo (molybdenum	0.01	Not toxic to plants at normal concentrations in siol and water. Can be toxic to livestock if forage is grown in siols with high concentrations of available molybdenum.
Ni (nickel)	0.20	Toxic to a number of plants at 0.5-1.0mg/L; reduced toxicity at neutral or alkaline pH.
Pd (lead)	5.0	Can inhibit plant cell growth at very high concentrations.
Se (selenium)	0.02	Toxic to plants at concentrations as low as 0.025 mg/L and toxic to livestock if forage is grown in soils with relatively high levels of added selenium. An essential element to animals but in very low concentrations.
Sn (tin)		
Ti (titanium)		Effectively excluded by plants; specific tolerance unknown.
W (tungsten)		
V (vanadium)	0.1	Toxic to many plants at relatively low concentrations.
Zn (zinc)	2.0	Toxic to many plants atwidely varying concentrations, reduced toxicity at pH > 6.0 and in fine textured or organic soils.

1- Adapted from National Academy of Sciences (1972) and Pratt (1972).
2- The maximum concentration is based on a water application rate which is consistent with good irrigation practices (10000 m3/ha per years). If the water application rate greatly exceeds this, the maximum concentrations should be adjusted downward accordingly. No adjustment should be made for application rates lease than 10 000 m3/ha per year. The values given are for water used on a continuous basis at one site.
Source: FAO Guidelines, R.S. Ayers & D.w. Westcot (1985).

BEST AVAILABLE COPY

Table C-5

Recommended microbiological quality guidelines for wastewater use in agriculture (a)

Category	Reuse conditions	Exposed group	Intestinal nematodes (b) (arithmetic mean no. of eggs per litre (c))	Faecal coliforms (geometric mean no. per 100ml) (c)	Wastewater treatment expected to achieve the required microbiological quality
A	Irrigation of crops likely to be eaten uncooked. sports fields, public parks, (d)	Workers, Consumer, public	<1	< 1000 (d)	A series of stabilization ponds designed to achieve the microbiological quality indicated, or equivalent treatment
B	Irrigation of cereal crops, industrial crops, fodder crops, Pasture and trees (e)	Workers	<1	No standard recommended	Retention in stabilization ponds for 8-10 days or equivalent helminth and faecal coliform removal
C	Localized irrigation of crops in category B if exposure of workers and the public does not occur	None	Not applicable	Not applicable	Pretreatment as required by the irrigation technology, but not less than primary sedimentation.

(a) In specific cases, local epidemiological, sociocultural and environmental factors should be taken into account, and the guidelines modified accordingly.

(b) Ascaris and Trichuris species and hookworms.

(c) During the irrigation period.

(d) A more stringent guideline (< 200 faecal coliforms per 100 ml) is appropriate for public lawns, such as hotel lawns. With which the public may come into direct contact.

(e) In the case of fruit trees, irrigation should cease two weeks before fruit is picked, and no fruit should be picked off the ground. Sprinkler irrigation should not be used.

Source: Scientific group on health aspects of use of treated wastewater for agricultural and aquaculture-W.H.O.- Geneva 18-23 Nov. 1987.

Table C-6

Chloride tolerance of some fruit crop cultivars and rootstocks.(a)

Crop	Rootstock or cultivar	Maximum permissible Cl in water without leaf injury (b),(c) (mg/L)
	Rootstocks	
Avocado (Persea americana)	West indian	180
	Guatemalan	145
	Mexican	110
Citrus (Citrus spp.)	Sunki mandarin, grapefruit	
	Cleopatra mandarin, Rangpur lime	600
	Sampson tangelo, rough lemon, sour orange, Ponkan mandarin	355
	Citrumelo 4475, trifolate orange, Cuban shaddock, Calamondin, Sweet orange, Savage citrange, Rusk citrange, Troyer citrange	250
Grape (Vitis spp.)	Salt Creek, 1613-3	960
	Dog ridge	710
Stone fruit (Prunus spp.)	Marianna	600
	Lovell, Shalil	250
	Yunnan	180
	Cultivars	
Berries (Rubus spp.)	Boysenberry	250
	Olallie blackberry	250
	Indian Summer raspberry	110
Grape (vitis spp.)	Thompson seedless, Perlette	460
	Cardinal, black rose	250
Strawberry (Fragaria spp.)	Lassen	180
	Shasta	110

(a) Data are adapted from Haas (13)
(b) For some crops, the concentrations given may exceed the overall salinity tolerance of that crop and cause some yield reduction before chloride ion toxicities. Values given are for the maximum concentration in the irrigation water. The values were derived from saturation extract data (ECe) by the following relationship : saturation extraction concentration = 1.5 water concentration.
(c) The maximum permissible values apply only to surface irrigated crops. Sprinkler irrigation may cause excessive leaf burn at values far below these, (see Table 3-10).

Source : FAO Guidelines, R.S. Ayers & D.W. Westcot (1985).

Table C-7

GUIDLINES FOR INTERPRETING LABORATORY DATA ON WATER SUITABILITY FOR GRAPES

Potential Irrigation Problem	Unita	Degree of Restriction on Use		
		None	Slight to Moderate	Severe2
Salinity [3] *(affects water availability to crops)*				
ECw	dS/m	< 1	1.0 - 2.7	> 2.7
Toxicity *(Specific ions which affect growth of crop)*				
Sodium (Na^+)[4]	me/l	< 20	-	-
Chloride (Cl^-)[4]	me/l	< 4	4 - 15	> 15
Boron (B)	mg/l	< 1	1 - 3	> 3
Miscellaneous				
Bicarbonate ($HCO3^-$)[5]	me/l	< 1.5	1.5 - 7.5	> 7.5
Nitrate-nitrogen (NO3-N)	mg/l	< 5	5 - 30	> 30

1. Adapted from Neja et al. 1978.
2. Special management practices and favorable soil conditions are required for successful production.
3. Assumes that rainfall and extra water applied owing to inefficiencies of normal irrigation will supply the crop need plus about 15 percent extra for salinity control.
4. With overhead sprinkler irrigation, sodium or chloride in excess of 3 me/l under extreme drying conditions may result in excessive leaf absorption, leaf burn and crop damage. If overhead sprinklers are used for cooling by frequent on-off cycling, damage may occur even at lower concentrations.
5. Bicarbonate (HCO3) in water applied by overhead sprinklers may cause white deposits on fruit and leaves which reduces market acceptability, but is not toxic to the plant.

Table C-8

PELATIVE SALT TOLERANCE OF VARIOUS CROPS AT GERMINATION[1]

Crop		50 percent Emergence reduction (ECe in dS/m)
Barley	*(Hordeum vulgare)*	16 - 24
Cotton	*(Gossypium hirsutum)*	15.5
Sugarbeet	*(Beta vulgaris)*	6 - 12.5
Sorghum	*(Sorghum bicolor)*	13
Safflower	*(Carthomus tinctorius)*	12.3
Wheat	*(Triticum aestivum)*	14 - 16
Beet, red	*(Beta vulgaris)*	13.8
Alfalfa	*(Medicago sativa)*	8.2 - 13.4
Tomato	*(Lycopersicon Lycopersicum)*	7.6
Rice	*(Oryza sativa)*	18
Cabbage	*(Brassica oleracea capitata)*	13
Muskmelon	*(Cucumis melo)*	10.4
Maize	*(Zea mays)*	21 - 24
Lettuce	*(Lactuca sativa)*	11.4
Onion	*(Allium cepa)*	5.6 - 7.5
Bean	*(Phaseolus vulgaris)*	8.0

[1] Data taken from Maas (1984).

Table C-9

Relative boron tolerance of agricultural crops (1), (2)

Very Sensitive (<0.5 mg/L)

Lemon	*Citrus Limon*
Blackberry	*Rubus spp.*

Sensitive (0.5-0.75 mg/L)

Avocado	*Persea americana*
Grapefruit	*Citrus X paradisi*
Orange	*Citrus sinensis*
Apricot	*Prunus armeniaca*
Peach	*Prunus persica*
Cherry	*Prunus avium*
Plum	*Prunus domestica*
Persimmon	*Diospyros Kaki*
Fig, Kadota	*Ficus carica*
Grape	*Vitis vinifera*
Walnut	*Juglans regia*
Pecan	*Carya illnoiensis*
Cowpea	*Vigna unguiculata*
Onion	*Allium cepa*

Sensitive (0.75-1.0 mg/L)

Garlic	*Allium sativum*
Sweet potato	*Ipomoea batatas*
Wheat	*Triticum eastivum*
Barley	*Hordeum vulgare*
Sunflower	*Helianthus anraius*
Bean, mung	*Vigna radiata*
Sesame	*Sesamum indicum*
Lupine	*Lupinus hartwegii*
Strawberry	*Fragaria spp.*
Artichoke, Jerusalem	*Helianthus tuberosus*
Bean, Kidney	*Phaseolus vulgaris*
Bean, lima	*Phaseolus lunatus*
Groundnut/Peanut	*Arachis hypogaea*

Moderately Sensitive (1.0-2.0 mg/L)

Pepper, red	*Capsicum crucum*
Pea	*Pisum sativa*
Carrot	*Daucus carota*
Radish	*Raphanus sativus*
Potato	*Solanum tuberosum*
Cucumber	*Cucumis sativus*

Moderately Tolerant (2.0-4.0 mg/L)

Lettuce	*Lactuca sativa*
Cabbage	*Brassica oleracea capitata*
Celery	*Apium graveolens*
Turnip	*Brassica rapa*
Bluegrass, Kentucky	*Poa pratensis*
Oats	*Avena sativa*
Maize	*Zea mays*
Artichoke	*Cynara scolymus*
Tobacco	*Nicotiana tabacum*
Mustard	*Brassica juncea*
Clover, sweet	*Melilotus indica*
Squash	*Cucurbita pepo*
Muskmelon	*Cucumis melo*

Tolerant (4.0-6.0 mg/L)

Sorghum	*Sorghum bicolor*
Tomato	*Lycopersicon Lycopersicum*
Alfalfa	*Medicago sativa*
Vetch, purple	*Vicia benghalensis*
Parsley	*Petroselinum crispum*
Beet, red	*Beta vulgaris*
Sugarbeet	*Beta vulgaris*

Very Tolerant (6.0-15.0 mg/L)

Cotton	*Gossypium hirsutum*
Asparagus	*Asparagus officinalis*

---

(1) Data taken from Maas (1984)
(2) Maximum concentrations tolerated in soil-water without yield or vegetative growth reductions. Boron tolerances vary depending upon climate, soil conditions and crop varieties. Maximum concentrations in the irrigation water are approximately equal to these values or slightly less.

Source: FAO Guidelines, R.S. Ayers & D.W. Westcot (1985).

Table C-10

Relative tolerance of selected crops to exchangeable sodium (1).

Sensitive (2)	Semi-tolerant(2)	Tolerant(2)
Avocado	Carrot	Alfalfa
(Persea americana)	*(Daucus carota)*	*(Medicago sativa)*
Deciduous Fruits	Clover, Ladino	Barley
Nuts	*(Trifolium repens)*	*(Hordeum vulgare)*
Bean, green	Dallisgrass	Beet, garden
(Phaseolus vulgaris)	*(Paspalum dilatatum)*	*(Beta vulgaris)*
Cotton *(at germination)*	Fescue, tall	Beet, sugar
(Gossypium hirsutum)	*(Festuca arundinacea)*	*(Beta vulgaris)*
Maize	Lettuce	Bermuda grass
(Zea mays)	*(Lactuca sativa)*	*(Cynodon dactylon)*
Peas	Bajara	Cotton
(Pisum sativum)	*(Pennisetum typhoides)*	*(cossypium hirsutum)*
Grapefruit	Sugarcane	Paragrass
(Citrus paradisi)	*(Saccharum officinarum)*	*(Brachicria mutica)*
Orange	Berseem	Rhodes grass
(Citrus sinensis)	*(Trifolium alexandrinum)*	*(Chloris gayana)*
Peach	Benji	Wheatgrass, crested
(Prunus persica)	*(Melilotus parviflora)*	*(Agropyron cristatum)*
Tangerine	Raya	Wheatgrass, fairway
(Citrus reticulata)	*(Brassica juncea)*	*(Agropyron cristatum)*
Mung	Oat	Wheatgrass, fairway tall
(Phaseolus aurus)	*(Avena sativa)*	*(Agropyron slongatum)*
Mash	Onion	Karnal grass
(Phaseolus mungo)	*(Allium cepa)*	*(Diplachra fusca)*
Lentil	Radish	
(Lens culinaris)	*(Raphanus sativus)*	
Groundnut *(peanut)*	Rice	
(Arachis hypogaea)	*(Oryza sativus)*	
Cram	Rye	
(Cicer arietirum)	*(Secale cereale)*	
Cowpeas	Ryegrass, Italian	
(Vigna sinensis)	*(Lolium multiflorum)*	
	Sorghum	
	(Sorghum vulgare)	
	Spinach	
	(Spinacia oleracea)	
	Tomato	
	(Lycopersicon esculentum)	
	Vetch	
	(Vicia sativa)	
	Wheat	
	(Triticum vulgare)	

Adapted from data of FAO-Unesco (1973); Pearson (1960); and Abrol (1982).
Source: FAO Guidelines, R.S. Ayers & D.W. Westcot (1985).

Table C-11

LABORATORY DETERMINATIONS NEEDED TO EVALUATE COMMON IRRIGATION WATER QUALITY PROBLEMS

Water parameter	Symbol	Unit[1]	Usual range in irrigation water	
SALINITY				
Salt Content				
Electrical Conductivity	EC_w	dS/m	0 - 3	dS /m
(or)				
Total Dissolved Solids	TDS	mg/l	0 - 2000	mg/l
Cations and Anions				
Calcium	Ca^{++}	me/l	0 - 20	me/l
Magnesium	Mg^{++}	me/l	0 - 5	me/l
Sodium	Na^{+}	me/l	0 - 40	me/l
Carbonate	$CO3^{--}$	me/l	0 - .1	me/l
Bicarbonate	$HCO3^{-}$	me/l	0 - 10	me/l
Chloride	Cl^{-}	me/l	0 - 30	me/l
Sulphate	$SO4^{--}$	me/l	0 - 20	me/l
NUTRIENTS[2]				
Nitrate - Nitrogen	NO3 - N	mg/l	0 - 10	mg/l
Ammonium - Nitrogen	NH4 - N	mg/l	0 - 5	mg/l
Phosphate - Phosphorus	PO4 - P	mg/l	0 - 2	mg/l
Potassium	K^{+}	mg/l	0 - 2	mg/l
MISCELIANEOUS				
Boron	B	mg/l	0 - 2	mg/l
Acid / Basicity	pH	1 - 14	6.0 - 8.5	
Sodium Adsorption Ratio[3]	SAR	$(me/1)^{1,2}$	0 - 15	

1. dS/m = desiSiemen/meter in S.I. units (equivalent to 1 mmho / cm - 1 millimmho / centimeter)
   mg/l = milligram per litre ~ parts per million (ppm).
   me/l = milliequivalent per litre (mg/l ÷ equivalent weight = me/l); in SI units, 1 me/l = 1 millimol / litre adjusted for electron charge.
2. NO3-N means the laboratory will analyse for NO3 but will report the NO3 in terms of chemically equivalent nitrogen. Similarly, for NH4-N, the laboratory will analyse for NH4 but report in terms of chemically equivalent elemental nitrogen. The total nitrogen available to the plant will be the sum of the equivalen elemental nitrogen.
   The same reporting method is used for phosphorus.
3. SAR is calculated from the Na, Ca and Mg reported in me/l.

Table C-12

Crop tolerence and yield potential of selected crops as influenced by irrigation water salinity (ECw) or soil salinity (ECe)

	Yield potential (2)									
	100%		90%		75%		50%		0% maximum(3)	
	ECe	ECw	ECe	ECw	ECe	ECw	ECe	ECw	ECe	ECw
Field crops										
Barley *(Hordeum Vulgare)* (4)	8.0	5.3	10	6.7	13	8.7	18	12	28	19
Cotton *(Gossypium hirsutum)*	7.7	5.1	9.6	6.4	13	8.4	17	12	27	18
Sugarbeet *(Beta vulgaris)* (5)	7.0	4.7	8.7	5.8	11	7.5	15	10	24	16
Sorghum *(Sorghum bicolor)*	6.8	4.5	7.4	5.0	8.4	5.6	9.9	6.7	13	8.7
Wheat *(Triticum aestivum)* (4), (6)	6.0	4.0	7.4	4.9	9.5	6.3	13	8.7	20	13
Wheat durum *(Triticum turgidum)*	5.7	3.8	7.6	5.0	10	6.9	15	10	24	16
Soyabean *(Glycine max)*	5.0	3.3	5.5	3.7	6.3	4.2	7.5	5.0	10	6.7
Cowpea *(Vigna unguiculata)*	4.9	3.3	5.7	3.8	7.0	4.7	9.1	6.0	13	8.8
Groundnut *(peanut)* *(Arachis hypogaea)*	3.2	2.1	3.5	2.4	4.1	2.7	4.9	3.3	6.6	4.4
Rice *(paddy)* *(Oriza sativa)*	3.0	2.0	3.8	2.6	5.1	3.4	7.2	4.8	11	7.6
Sugarcane (Saccharum officinarum)	1.7	1.1	3.4	2.3	5.9	4.0	10	6.8	19	12
Corn *(maize)* *(Zea mays)*	1.7	1.1	2.5	1.7	3.8	2.5	5.9	3.9	10	6.7
Flax *(Linum usitatissimum)*	1.7	1.1	2.5	1.7	3.8	2.5	5.9	3.9	10	6.7
Broadbean *(Vicia faba)*	1.5	1.1	2.6	1.8	4.2	2.0	6.8	4.5	12	8.0
Bean *(phaseolus vulgaris)*	1.0	0.7	1.5	1.0	2.3	1.5	3.6	2.4	6.3	4.2
Vegetable crops										
Squash zucchini *(courgette)* *(Cucurbita pepo melopepo)*	4.7	3.1	5.8	3.8	7.4	4.9	10	6.7	15	10
Beet, red *(Beta vulgaris)*(5)	4.0	2.7	5.1	3.4	6.8	4.5	9.6	6.4	15	10
Squash, scallop *(Cucurbita pepo melopepo)*	3.2	2.1	3.8	2.6	4.8	3.2	6.3	4.2	9.4	6.3
Broccoli *(Brassica oleracea botrytis)*	2.8	1.9	3.9	2.6	5.5	3.7	8.2	5.5	14	9.1
Tomato *(Laycopersicon esculentum)*	2.5	1.7	3.5	2.3	5.0	3.4	7.6	5.0	13	8.4
Cucumber *(Cucumis sativus)*	2.5	1.7	3.3	2.2	4.4	2.9	6.3	4.2	10	6.8
Spinach *(Spinacia olerucea)*	2.0	1.3	3.3	2.2	5.3	3.5	8.6	57	15	10
Celery *(Apium graveolens)*	1.8	1.2	3.4	2.3	5.8	3.9	9.9	66	18	12
Cabbage *(Brassica oleracca capitata)*	1.8	1.2	2.8	1.9	4.4	2.9	7.0	4.6	12	8.1
Potato *(Solanum tuberosum)*	1.7	1.1	2.5	1.7	3.8	2.5	5.9	3.9	10	6.7
Corn, sweet *(maize)* *(Zea mays)*	1.7	1.1	2.5	1.7	3.8	2.5	5.9	3.9	10	6.7
Sweet potato *(Impomoea batatas)*	1.5	1.0	2.4	1.6	3.8	2.5	6.0	4.0	11	7.1
Pepper *(Capsicum annuum)*	1.5	1.0	2.2	1.5	3.3	2.2	5.1	3.4	8.6	5.8
Lettuce *(Lactuca sativa)*	1.3	0.9	2.1	1.4	3.2	2.1	5.1	3.4	9.0	6.0
Radish *(Raphanus sativus)*	1.2	0.8	2.0	1.3	3.1	2.1	5.0	3.4	8.9	5.9
Onion *(Allium cepa)*	1.2	0.8	1.8	1.2	2.8	1.8	4.3	2.9	7.4	5.0
Carrot *(Daucus carota)*	1.0	0.7	1.7	1.1	2.8	1.9	4.6	3.0	8.1	5.4
Bean *(Phaseolus vulgaris)*	1.0	0.7	1.5	1.0	2.3	1.5	3.6	2.4	6.3	4.2
Turnip *(Phaseolus vulgaris)*	0.9	0.6	2.0	1.3	3.7	2.5	6.5	4.3	12	8.0
Forage crops										
Wheatgrass, tall *(Agropyron elongatum)*	7.5	5.0	9.9	6.6	13	9.0	19	13	31	21
Wheatgrass, fairway crested *(Agropyron oristatum)*	7.5	5.0	9.0	6.0	11	7.4	15	9.8	22	15
Bermuda grass *(Cynodon dactylon)* (7)	6.9	4.6	8.5	5.6	11	7.2	15	9.8	23	15
Barley *(forage)* *(Hordeum vulgare)* (4)	6.0	4.0	7.4	4.9	9.5	6.4	13	8.7	20	13
Ryegrass. perennral *(Lolium perenne)*	5.6	3.7	6.9	4.6	8.9	5.9	12	8.1	19	13
Trefoil, narrowleaf birdsfoot (8) *(Lotus corniculatus tenuifolium)*	5.0	3.3	6.0	4.0	7.5	5.0	10	6.7	15	10

Table C-12 Continued

	Yield potential									
	100%		90%		75%		50%		0%maximum (3)	
	ECe	ECw	ECe	ECw	ECe	ECw	ECe	ECw	Ece	ECw
Harding grass *(Phalaris tuberosa)*	4.6	3.1	5.9	3.9	7.9	5.3	11	7.4	18	12
Fescue, tall *(Festuca elatior)*	3.9	2.6	5.5	3.6	7.8	5.2	12	7.8	20	13
_Wheatgrass, standard crested *(Agropyron sibiricum)*	3.5	2.3	6.0	4.0	9.8	6.5	16	11	28	19
Vetch, common *(Vicia angustifolia)*	3.0	2.0	3.9	2.6	5.3	3.5	7.6	5.0	12	8.1
Sudan grass *(Sorghum sudanense)*	2.8	1.9	5.1	3.4	8.6	5.7	14	9.6	26	17
Wildrye, beardless *(Elymus truicoides)*	2.7	1.8	4.4	2.9	6.9	4.6	11	7.4	19	13
Cowpea *(forage)* *(Vigna unguiculata)*	2.5	1.7	3.4	2.3	4.8	3.2	7.1	4.8	12	7.8
Trefoil, big *(Lotus uliginosus)*	2.3	1.5	2.8	1.9	3.6	2.4	4.9	3.3	7.6	5.0
Sesbania *(Sesbania exaltata)*	2.3	1.5	3.7	2.5	5.9	3.9	9.4	6.3	17	11
Sphaerophysa *(Sphaerophysa salsula)*	2.2	1.5	3.6	2.4	5.8	3.8	9.3	6.2	16	11
Alfalfa *(Medicago sativa)*	2.0	1.3	3.4	2.2	5.4	3.6	8.8	5.9	16	10
Lovegrass *(Eragrostis sp.)* (9)	2.0	1.3	3.2	2.1	5.0	3.3	8.0	5.3	14	9.3
Corn *(forage)* *(maize)* *(Zea mays)*	1.8	1.2	3.2	2.1	5.2	3.5	8.6	5.7	15	10
Clover, berseem *(Trifolium alexundrinum)*	1.5	1.0	3.2	2.2	5.9	3.9	10	6.8	19	13
Orchard grass *(Dactylis glomerata)*	1.5	1.0	3.1	2.1	5.5	3.7	9.6	6.4	18	12
Foxtail, meadow *(Alopecurus pratenis)*	1.5	1.0	2.5	1.7	4.1	2.7	6.7	4.5	12	7.9
Clover, red *(Trifolium pratense)*	1.5	1.0	2.3	1.6	3.6	2.4	5.7	3.8	9.8	6.6
Clover, alsika *(Trifolium hybridum)*	1.5	1.0	2.3	1.6	3.6	2.4	5.7	3.8	9.8	6.6
Clover, ladino *(Trifolium repens)*	1.5	1.0	2.3	1.6	3.6	2.4	5.7	3.8	9.8	6.6
Clover, strawberry *(Trifolium fragiferum)*	1.5	1.0	2.3	1.6	3.6	2.4	5.7	3.8	9.8	6.6
_Fruit crops (10)										
Date palm *(Phoenix dactylifera)*	4.0	2.7	6.8	4.5	11	7.3	18	12	32	21
Grapefruit *(Citrus paradisi)* (11)	1.8	1.2	2.4	1.6	3.4	2.2	4.9	3.3	8.0	5.4
Orange *(Citrus sinensis)*	1.7	1.1	2.3	1.6	3.3	2.2	4.8	3.2	8.0	5.3
Peach *(Prunus persica)*	1.7	1.1	2.2	1.5	2.9	1.9	4.1	2.7	6.5	4.3
Apricot *(Prunus armeniaca)* (11)	1.6	1.1	2.0	1.3	2.6	1.8	3.7	2.5	5.8	3.8
Grape *(Vitus sp.)* (11)	1.5	1.0	2.5	1.7	4.1	2.7	6.7	4.5	12	7.9
Almond *(Prunus dulcis)* (11)	1.5	1.0	2.0	1.4	2.8	1.9	4.1	2.8	6.8	4.5
Plum, prune *(Prunus domestica)* (11)	1.5	1.0	2.1	1.4	2.9	1.9	4.3	2.9	7.1	4.7
Blackberry *(Rubus sp.)*	1.5	1.0	2.0	1.3	2.6	1.8	3.8	2.5	6.0	4.0
Boysenberry *(Rubus ursinus)*	1.5	1.0	2.0	1.3	2.6	1.8	3.8	2.5	6.0	4.0
Strawberry *(Fragaria sp.)*	1.0	0.7	1.3	0.9	1.8	1.2	2.5	1.7	4.0	2.7

(1) Adapted from Maas and Hoffman (1977) and Maas (1984). These data should only serve as a guide to relative tolerances among crops. Absolute tolerances vary depending upon climate, soil conditions and cultural practices. In gypsiferous soils, plants will tolerate about 2ds/m higher soil salinity (ECe) than indicated but the water salinity (ECw) will remain the same as shown in this tabel.

(2) ECe means average root zone salinity as measured by electrical conductivity of the saturation extract of the soil, reported in decisiemens per meter (ds/m) at 25C. ECw means electical conductivity of the irrigation water in deci Siemens per meter (ds/m). The relationship between soil salinity and water salinity (ECe=1.5 ECw) assumes a 15-20 leaching fraction and a 40-30-20-10% water use pattern for the upper to lower quarters of the root zone.

(3) The zero yield potential or maximum ECe indicates the theoretical soil salinity (ECe) at which crop growth ceases.

(4) Barley and wheat are less tolerant during germination and seedling stage : ECe should not exceed 4 - 5 dS/m in the upper soil during this period.

(5) Beets are more sensitive during germination : ECe should not exceed 3 ds/m in the seedling area for garden beets and sugar beets.

(6) Semi-dwart, short cultivars may be less tolerant.

(7) Tolerance given is an average of several varieties : Suwannee and Coastal Bermuda grass are about 20% more tolerant, while common and Greenfield Bermuda grass are about 20% less tolerant.

(8) Broadleaf Birdsfoot Trefoil seems less tolerant than Narrowleaf Birdsfoot Trefoil.

(9) Tolerance given is an average for boer. Wilman, Sand and Weeping Lovegrass ; Lehman Lovegrass seems about 50% more tolerant.

(10) These data are applicable when rootstocks are used that do not accumulate Na^+ and Cl^- rapidly or when these ions do not predominate in the soil.

(11) Tolerance evaluation is based on tree growth and not on yeild.

Source: FAO Guidelines, R.S. Ayers & D.W. Westcot (1985).

Table C-13
Summary of requirements of Jordanian Standard 893/1994 for treated domestic wastewater.

Parameter	Maximum allowable limit (mg/L)*	
	Disposed to wadis, rivers, surface water bodies, and groundwater recharge	Reuse for irrigation
pH	6.5-9	6.5-9
Temperature change (C)	<3	-
D.O	31	-
TDS	3000	2000 (1)
TSS	50(3) / 200(4)	100 (1)
BOD5	50(3) / 50(4)	-
COD	150(3) / 150(4)	-
NH3	30	-
FOG	15	15
ABS	6	-
Cl2	0.5 (5)	-
Phenol	0.5	-
TFCC MPN/100mL	<1000	<1000 (6)
Intestinal nematodes	<1	<1 (6)

* All units are in mg/L except where noted.

(1) Depends on degree of restriction (none, slight to moderate, or severe).

(2) Depends on method of irrigation.

(3) Conventional wastewater treatment plants.

(4) Waste stabilization ponds.

(5) This is a minimum limit of residual chlorine and it should be linked with total faecal coliform count.

(6) FAO and WHO guidelines and their amendments should be taken into consideration.

Appendix D

Site Visit Photographs

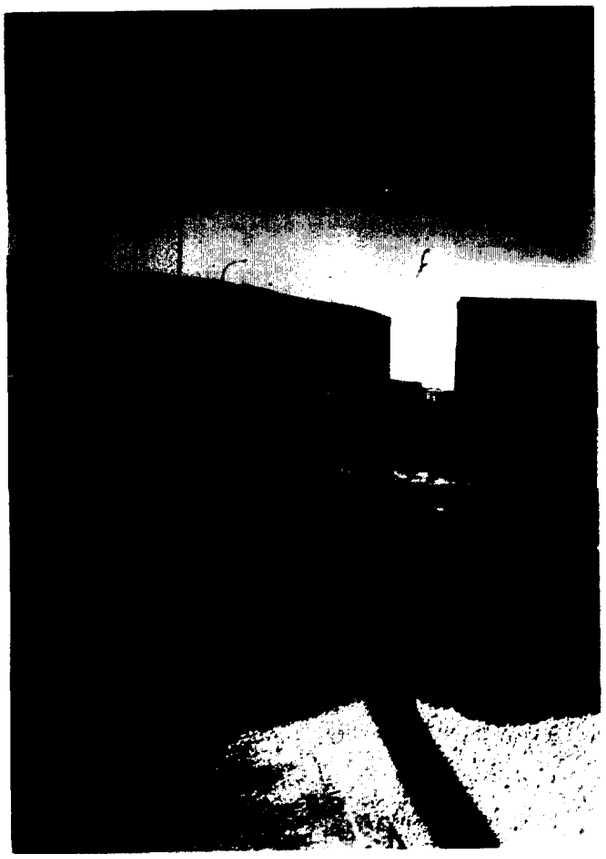

Photo 1 - Oil unloading area.

Photo 2 - Oil spilled on bare ground.

Photo 3 - Drum storage on bare ground and steep hillside.

Photo 4 - Leaked chemicals on soil in the storage area.

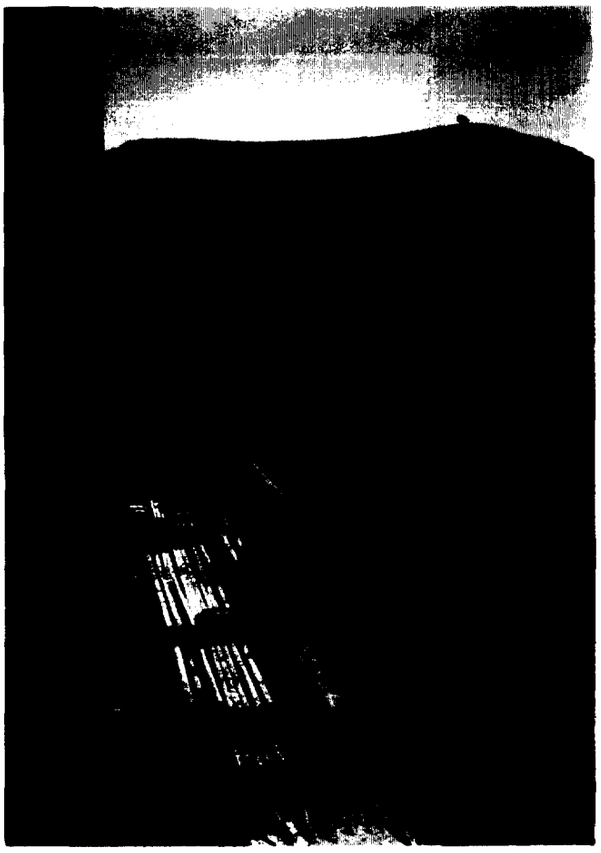

Photo 5 - Loading area with spills on bare ground.

Photo 6 - Loading area with spills on bare ground.

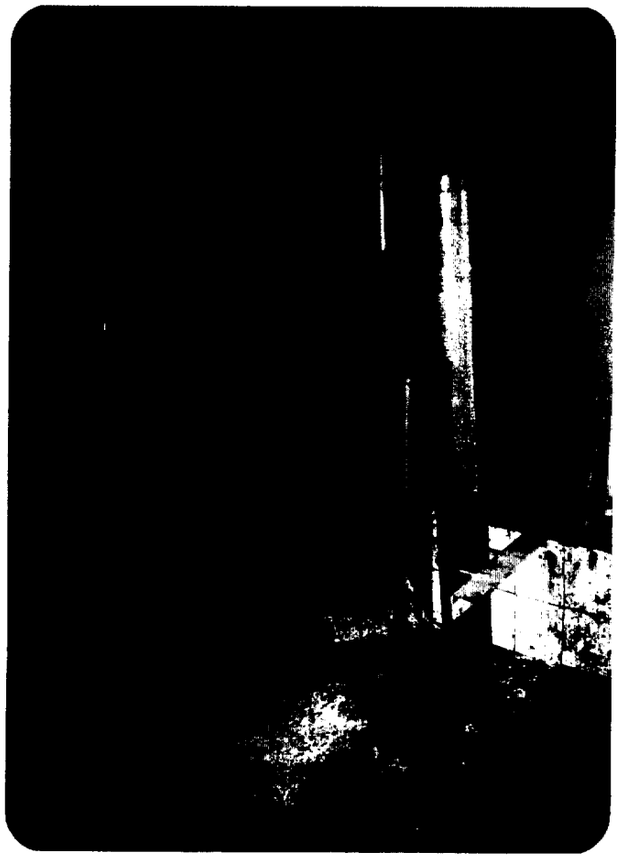

Photo 7 -Spills in sulfonation plant. Drains lead to waste collection basin.

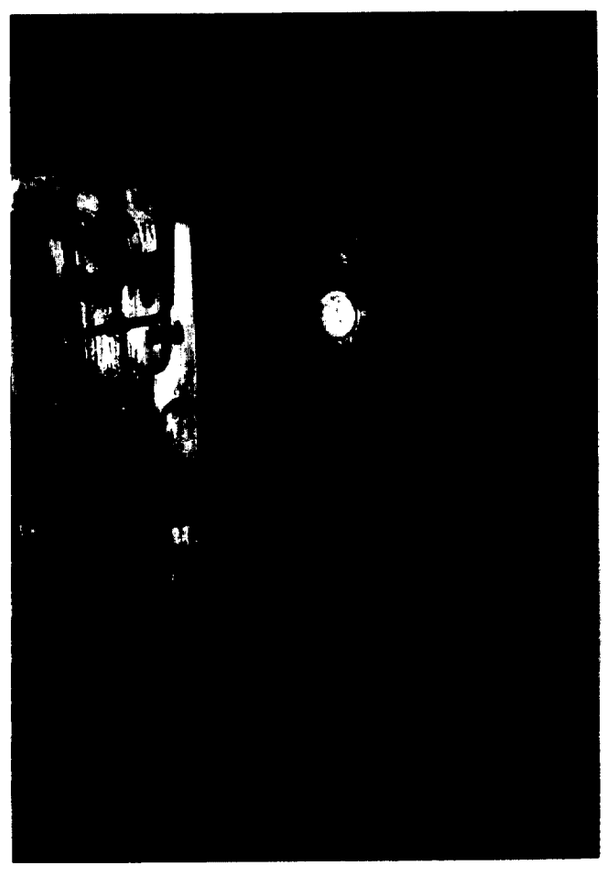

Photo 8 - Sulfur debris and condensate in sulfur melting room.

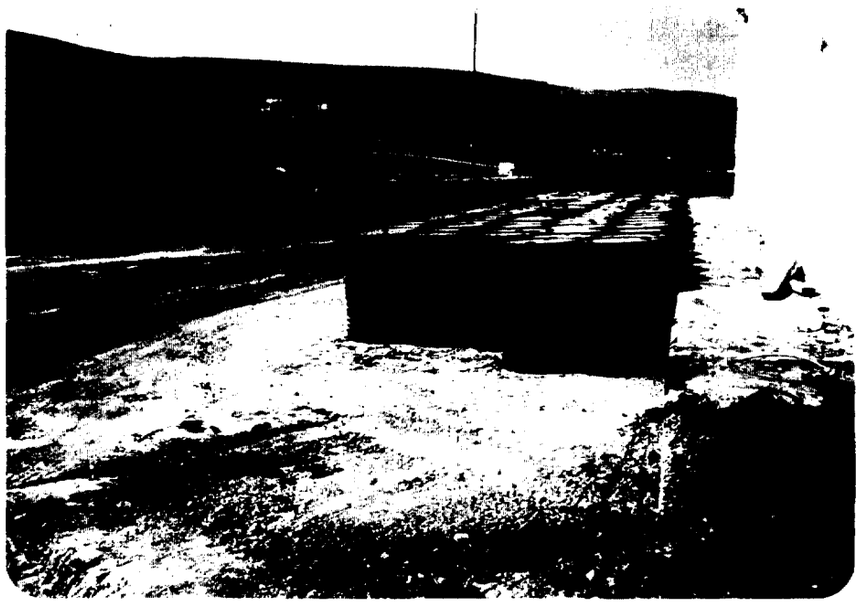

Photo 9 - Drums of sulfonic acid stored on bare ground and hillside.

Photo 10 - Open bags of sodium carbonate stroed outside on bare ground. Area drains to wadi.

Photo 11 - Bags of solid waste stored on hillside on bare ground.

Photo 12 - Waste collection basin.

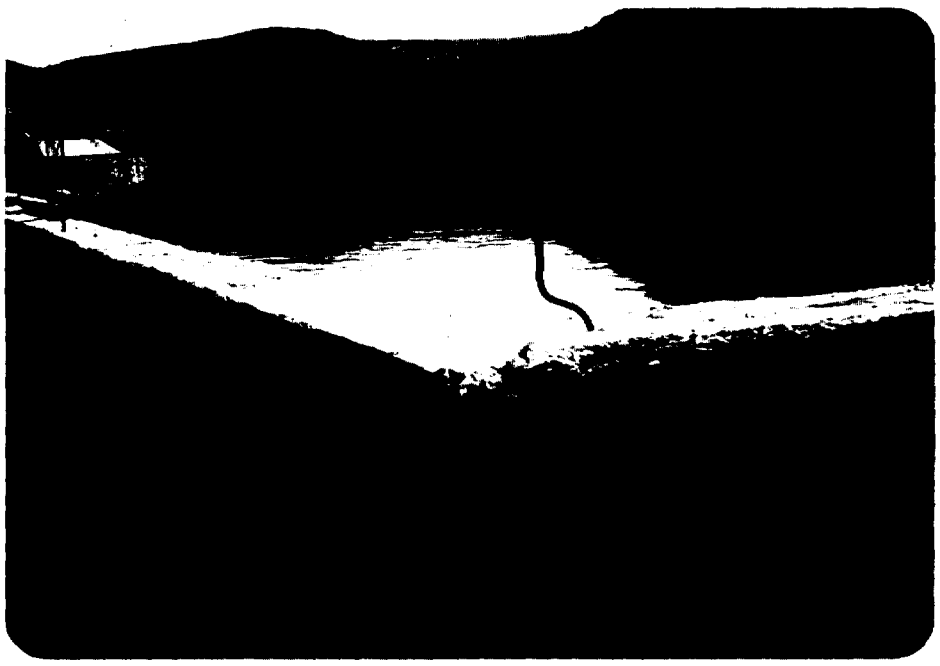

Photo 13 - Waste collection basin.

Photo 14 - Autoclave used to dissolve rock sodium silicate.

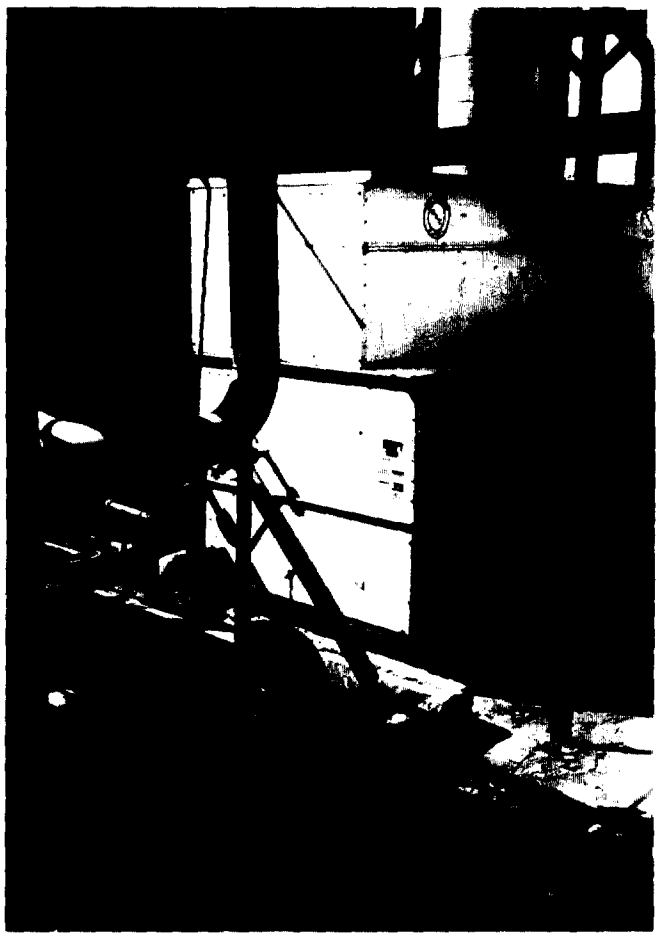

Photo 15 - Closed circuit cooling system.

Appendix E

References

REFERENCES

Kirk-Othmer Encyclopedia of Chemical Technology. Third Edition. Vols. 2, 20, 22. John Wiley and Sons, New York. 1983.

Personal Communication. Discussions with Mr. Hatem Abbas, Technical Manager, Jordan Sulpho-Chemicals Company. September 20 through October 8, 1994.

U.S. EPA. Development Document for Effluent Limitations Guidelines and New Source Performance Standards - Soaps and Detergents Manufacturing Point Source Category. United States Environmental Protection Agency. EPA Report No. 440/1-74/018-A. April 1974.

Review of Pollution Prevention and Waste Minimization Techniques Used by the Sulfur Chemicals Manufacturing Industry

FINAL REPORT

September 15, 1994

Prepared for:

United States Agency for International Development

Prepared by:

Science Applications International Corporation
Environmental and Health Sciences Group
7600 A Leesburg Pike
Falls Church, VA 22043

SAIC Project No. 01-0833-03-8167-100

Table of Contents

Page

1.0 INTRODUCTION 1-1

1.1 Background 1-1
1.2 Objectives 1-2

2.0 INDUSTRIAL HISTORY 2-1

2.1 General 2-1
2.2 Sulfur Chemical Industry in Jordan 2-1

3.0 PROCESS OVERVIEW 3-1

3.1 Sulfonic Acid 3-1
3.2 Soaps and Detergents 3-3
3.3 Sodium Silicate 3-4
3.4 Sodium Thallium Sulfonate 3-4
3.5 Amides 3-4

4.0 WATER USE AND WASTE GENERATION IN THE CHEMICAL MANUFACTURING INDUSTRY 4-1

4.1 Water Use 4-1
4.2 Waste Generation 4-3

5.0 POLLUTION PREVENTION AND WASTE MINIMIZATION TECHNIQUES USED BY THE CHEMICAL MANUFACTURING INDUSTRY 5-1

5.1 Water Conservation and PP/WM Techniques 5-1
5.2 Effluent Control and Treatment Technologies 5-3

6.0 REFERENCES

Appendix A Selected PP/WM Guidance and Fact Sheets for the Chemical Manufacturing Industry

Appendix B Selected PP/WM Case Studies for Chemical Manufacturing Industries

Appendix C Bibliography

List of Exhibits

Exhibit 3-1 Relationship of Various Segments of the Organic Chemicals Manufacturing Industry 3-2

Exhibit 4-1 Typical Pollutant Concentrations for the Soap and Detergent Manufacturing Industry 4-5

Exhibit 5-1 Treatment Methods Used by the Soap and Detergent Manufacturing Industry 5-5

Exhibit 5-2 Relative Efficiency of Several Methods Used to Remove Pollutants 5-6

Exhibit 5-3 Composite Flow Sheet for Waste Treatment 5-8

1.0 INTRODUCTION

1.1 Background

Under a contract with the United States Agency for International Development (USAID), Development Alternatives Incorporated (DAI) is performing an Industrial Wastewater Discharge Prevention (IWDP) Program in Amman, Jordan. The IWDP Program is one of the four components of the Water Quality Improvement and Conservation (WQIC) project funded by USAID. The Program is being performed by DAI with full coordination between the Jordanian Ministry of Water and Irrigation (MWI) and the Amman Chamber of Industry (Chamber).

The IWDP will be performed in three phases. The first phase requires completion of eight pollution prevention/waste minimization (PP/WM) opportunity audits by DAI and its sub-contractors. The second phase requires completion of Feasibility Studies (FS) for four of the audited facilities. Finally, demonstration projects will be completed for selected FS facilities.

Due to the high cost of waste treatment, as well as the need to minimize waste of raw materials and resources, it is in the best interest of businesses and industries to minimize their waste generating practices. Companies with effective PP/WM programs may well be the lowest-cost producers of goods due to their efficient practices. Waste management practices can include:

1. Reduce waste generation

   - Substitution of less hazardous raw materials in product manufacture
   - Alteration of products manufactured to eliminate need for hazardous materials use
   - Replacement or upgrading of outdated or inefficient process equipment
   - Development of employee training programs to ensure employees efficiently manage raw materials and resources.

2. Reuse waste materials prior to disposal

   - Reuse of uncontaminated raw materials and resources (including water)
   - Reprocessing of previously discarded materials (e.g., off-spec materials, used materials)
   - On site recovery of reusable materials (e.g., used solvents, waste heat, scrap).

3. Recycle waste materials

4. Treat wastes and dispose of residues.

These options, in the order presented, represent the waste management hierarchy.

250

1.2 Objectives

The facility PP/WM audits are designed to assess the potential for pollution prevention and waste minimization at the study facilities. The goal of each audit is to evaluate and identify all possible PP/WM, wastewater clean-up, and water conservation techniques that are appropriate for the study facility. Audit documentation will consist of a background PP/WM assessment paper and an audit evaluation report. This document is intended to serve as the PP/WM background paper for the sulfur chemicals processing sector of the chemical manufacturing industry.

The specific objectives of this audit are as follow:

1. Review general industry background data and identify "state-of-the-art" processing and waste management practices.

2. Work on-site with industry representatives, ministry officials, and other interested groups to review current processing procedures and identify possible PP/WM options.

3. Develop a report that evaluates all possible PP/WM alternatives and provides recommendations to the industry.

In order to complete the first objective, a comprehensive literature review was performed. This review included searches of the U.S. EPA Pollution Prevention Information Clearinghouse (PPIC) repository (and its corresponding database PIES), on-line library catalog databases, pollution PP/WM bibliographical references, and personal contacts with pollution prevention specialists. The review resulted in the identification of numerous references with a range of very general to very specific PP/WM techniques. Source documents were assessed to determine their applicability to this project and categorized appropriately. Documents pertinent to this project are included as Appendix A (Fact Sheets), Appendix B (Case Studies) and Appendix C (Bibliography).

Following completion of the literature review, the audit team will perform the on-site audit of the industrial facility. The audit will be performed with close consultation of industry representatives to ensure that they are aware of and support proposed actions. Audit activities will included the careful gathering of baseline water use and waste generation data, identification and assessment of potential PP/WM options, and solicitation of ideas and proposals from management and production line staff.

Finally, the audit findings will be summarized, and all options evaluated in the audit report. The audit will recommend the development of a site-specific program that meets the specific needs and goals of the audited facility. Audit recommendations will include both technical PP/WM recommendations (e.g., housekeeping practices, treatment options, etc.) and suggestions for PP/WM training for facility staff and follow-up studies to assess program successes.

25

2.0 INDUSTRIAL HISTORY

2.1 General

The sulfur chemical industry is involved in the manufacture of a variety of organic and inorganic chemicals that contain sulfur and sulfur compounds. Sulfur chemicals produced by this industry group may be sold as raw materials for other manufacturing processes or, for certain formulations, may be sold as finished products. One of the major producers and end users of sulfur compounds is the soap and detergent manufacturing industry. Because the industry to which this background paper is directed is involved in manufacture of both sulfur chemicals, soap and detergent additives and builders, and soap and detergent products, this overview will focus on this specific sector of the industry.

Soaps and cleaning materials have been produced since the earliest recorded history of mankind; however, modern soap and detergent manufacturing practices trace their history to the early 1930s. It was during this era that synthetic surface active agents (surfactants) were developed and introduced to the commercial market. The industry soon developed polyphosphate detergent builders that allowed synthetic detergents to be substituted for traditional soap formulations. Due to environmental concerns over the use of polyphosphates, the industry began conversion to more biodegradable linear benzene sulfonates during the 1960s. Today, there are a wide variety of soaps and detergents available commercially for all types of applications. Applications can include; personal hygiene products, laundry detergents, dish washing detergents and machinery cleaning products (USEPA 1974).

The soap and detergent manufacturing industry most often purchases raw materials such as caustic, fats and oils and builders from bulk chemical suppliers; however, there are large scale facilities which produce and control their own raw material supplies. While raw materials are purchased from bulk suppliers, sulfation and sulfonation are almost always practiced by the manufacturers.

2.2 The Sulfur Chemicals Manufacturing Industry in Jordan

The Jordan Sulpho Chemicals facility consists of five plants. A description of each of the plants is provided below.

Sulfonic Acid Plant

The plant produces sulfonic acid from sulfur and linear alkaline benzene using a sulfonation process. The production rate for sulfonic acid is approximately 1 ton per hour yielding 24 tons per day. The plant also produces linear LSLES.

Soap Plant

The soap plant produces raw soap granules from palm oil.

Sodium Silicate Plant and Sodium Silicate Dissolving Plant

This plant produces sodium silicate from silica, soda ash, and sodium carbonate. The plant produces approximately 25-30 tons per day of sodium silicate.

The resultant sodium silicate is dissolved using water and steam in the dissolving plant. This unit is not operated on a continuous basis.

Sodium Thallium Sulfonate Plant

Sodium thallium sulfonate is produced through the reaction of sulfuric acid and thallium. The production rate is approximately 5 tons per day.

Amides Plant

Amides are produced at this facility using coconut oil, mono ethyl amine and diethyl amine. The production rate is approximately 5 tons per day.

3.0 PROCESS OVERVIEW

The production of organic chemical products involves the chemical reaction of various raw materials (feedstock), under varying reaction conditions and chemical engineering unit processes. It is common for a facility in this category to utilize its reaction facilities to produce several different products simultaneously, and to change its mix of raw materials and products on a daily, weekly or monthly basis (USEPA 1987).

Synthetic organic chemicals are typically produced by reactions involving naturally occurring raw materials such as petroleum, natural gas and coal. An industry study performed in the United States (USEPA 1987) reports that organic chemicals and plastics are produced commercially from eight major raw material classifications: methane, ethane, propene, butanes/butenes, higher aliphatic and aromatic compounds, benzene, toluene and xylene. Organic chemical manufacturers may use these chemicals directly, or may use intermediate products produced from these chemicals, as their feedstocks. A diagram of the relationship of various segments of the organic chemical industry is provided in Exhibit 3-1.

The production and manufacture of an organic chemical product consists of three steps:

1. The combination of reactants under suitable conditions to yield the desired product.

2. The separation of the product from the reaction matrix (e.g., by-products, co-products, reaction solvents.

3. Final purification and/or disposal of wastewater (USEPA 1987).

The sulfur chemicals industry uses these processes to produce chemical compounds for a variety of uses. The particular processes applicable to the sulfur chemical industry in Jordan include: sulfonic acid production, soap and detergent manufacturing, sodium silicate production, sodium thallium sulfonate production and amides production. A description of each of these processes is provided in the following sections.

3.1 Sulfonic Acid

The group of chemicals referred to as sulfonic acids include acids that are derived from sulfuric acid by replacement of a hydroxyl group by either an inorganic anion or a univalent organic radical. Sulfonic acids are, therefore, characterized by the chemical formulae: -SO_2OH or -SO_3H. Where the substitution involves an inorganic ion (e.g., chlorine or fluorine) the general formula is represented by X-SO_2OH. Where the substitution involves an organic radical, the general formula is represented by R-SO_2OH. The properties of sulfonic acids are affected significantly by the characteristics of the "R" group. The majority of sulfonic acids, however, are characterized as strong acids and are generally hygroscopic, nonvolatile, soluble in water and chemically stable.

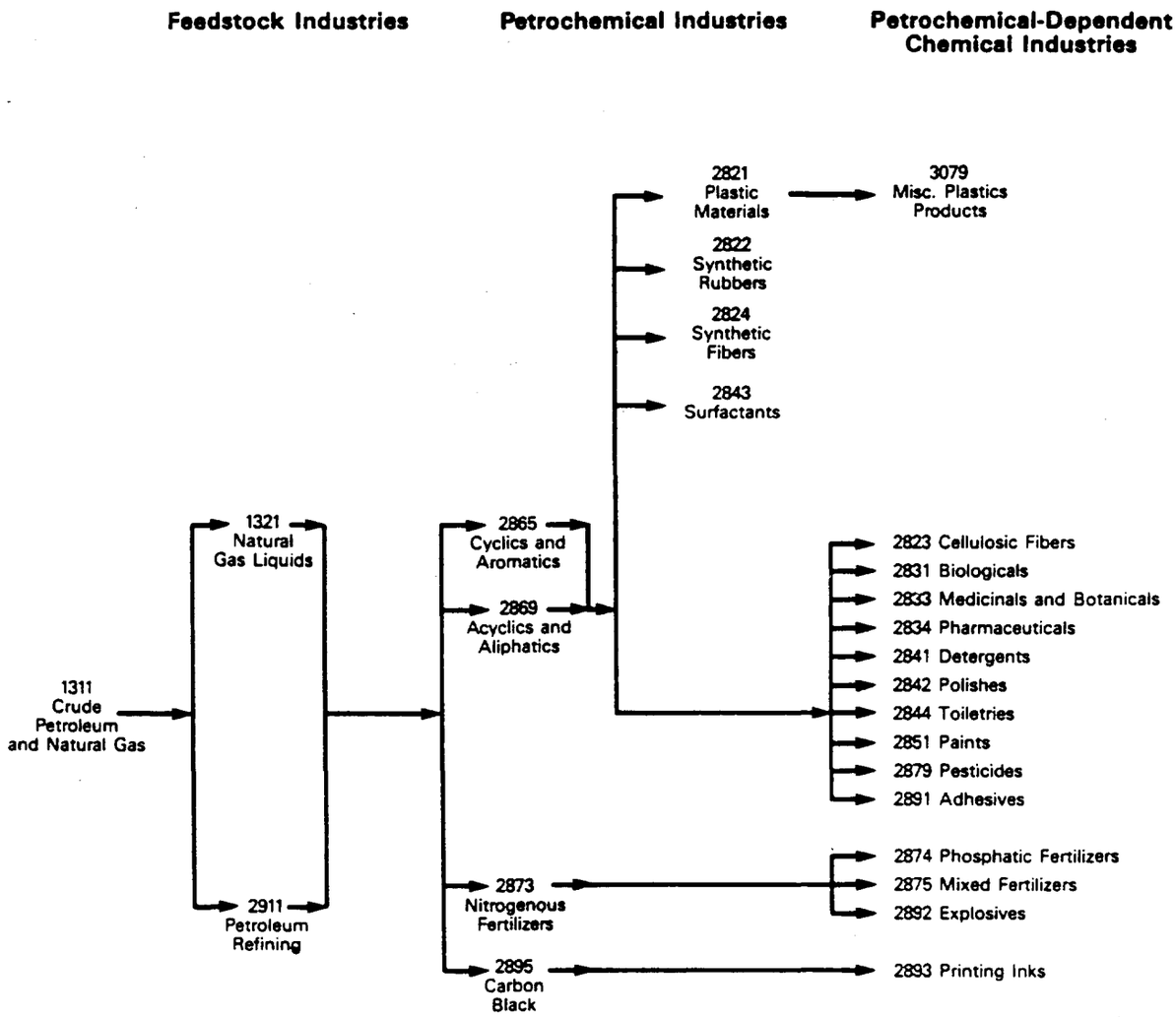

Exhibit 3-1 Relationship of Various Segments of the Organic Chemicals Manufacturing Industry
(From: U.S. Dept. of Commerce. *1981 U.S. Industrial Outlook.* Bureau of Industrial Economics, Washington, DC. 1981.)

255

Sulfonates (salts of sulfonic acids) linked to alkyl, aryl, or alkylaryl hydrophobes are effective in detergent manufacturing. Sulfonic acids are relatively strong acids and their associated salts are not generally affected by pH. The alkylbenzenesulfonates (ABS) group are used widely in soap manufacturing. Produced from alkylbenzenesulfonic acids, these salts are effective surfactants and are widely used in detergent formulations.

Sulfonates are produced by reactions of sulfuric acid and the inorganic or organic functional group under prescribed conditions. Alkylbenzenesulfonates are produced by the reaction of sulfuric acid and linear alkyl-benzene (LAB). In this process the by-product of the reaction is water (Kirk-Othmer 1983).

3.2 Soaps and Detergents

Soaps are the salts of long chain fatty acids. Sodium, potassium and calcium are commonly used as the cation in these salts. The surface activity of soaps is the result of the hydrophilic functional group at one end of the long chain molecule combined with the hydrophobic group at the other. In solution, these molecules aggregate as micelles which result in the emulsifying and dispersing characteristics of soaps.

The common raw materials used in soap production are naturally occurring fatty acids and inorganic alkalies. Fatty acid feedstocks may include the following:

- **Tallow** - Animal fat rendered from the body fat of cattle and sheep
- **Coconut Oil** - Extracted from crushed fruit of the coconut palm
- **Palm Oil** - Extracted from the crushed fruit of the tropical palm tree
- **Palm Kernel Oil** - Extracted from the nut of the tropical palm tree.

Common alkali used in the manufacturing process include sodium hydroxide and potassium hydroxide. These chemicals can be used alone or in combination to yield specific characteristics in the final soap product.

The manufacturing processes used in soap production vary depending on the raw materials and final products being generated. In general, however, the process includes three basic steps: saponification, washing, and fitting. Saponification involves the mixing and reaction of the fatty acids and alkali feedstocks in a heated environment. In most processes the alkali is added slowly during the reaction until the point where it is no longer consumed by the reaction. The unreacted waste alkali (lye) is then removed from the reaction vessel for washing and glycerol recovery. Washing involves the series of steps that result in the removal of lye from the soap product. Fitting is the process where additional impurities are removed, additives are incorporated and final processing is performed. These manufacturing processes can be accomplished in very simple open tanks or in large fully automated systems (Kirk-Othmer 1983).

256

3.3 Sodium Silicate

Silicates, in the natural environment and manufactured commercially, are salts composed of silicon dioxide and an alkali metal. The alkali metal is usually sodium or potassium. Chemically, sodium silicates are the salts of a strong base and a weak acid. In solution, these salts form highly alkaline solutions and are useful in the manufacture of soaps and detergents.

Sodium silicates are widely used as soap builders in soap and detergent manufacturing. In the soap and detergent formulation, sodium silicates act as alkalies and aid in the saponification of oils and fats due to their alkaline nature and buffering capacity. Silicates are also effective in controlling the corrosive action of detergents on metallic washing machine parts and are effective in the sequestering of magnesium hardness ions in solution. Commercially available silicates are characterized by the ratio of SiO_2 to Na_2O in the silicate molecule. In detergent formulae, the ratio is typically 2.4:1.

Sodium silicate is produced commercially through the reaction of quartz sand (silica) and sodium carbonate (soda ash) at a high temperature. To ensure a high quality glass, the sand and soda ash should be of high purity. The resultant molten sodium silicate is extremely caustic and can damage equipment if not handled properly. The molten glass is formed in to lumps for subsequent dissolving or can be drawn directly into a dissolving unit.

3.4 Sodium Toluene Sulfonate [RESERVED]

3.5 Amides

Fatty acid amides are generally produced by the reaction of a fatty acid with a ammonia or an amine and have the chemical formula: $R\text{-}CONH_2$, where R may be a saturated or unsaturated alkyl chain derived from a fatty acid. Fatty acid amides are generally insoluble in water.

Fatty acid amides are produced most commonly by the reaction of a fatty acid with anhydrous ammonia. These materials are combined and heated under slightly increased pressure for approximately 10 to 12 hours. During the reaction, ammonia and water are constantly vented to ensure completion of the reaction. Various materials can be used to catalyze the reaction including boric acid, and titanium and zinc alkoxides.

4.0 WATER USE AND WASTE GENERATION IN THE CHEMICAL MANUFACTURING INDUSTRY

The variety of raw materials, reaction processes, intermediates and final products manufactured by the chemical industry results in an equally diverse inventory of wastes generated by these processes. Pollutants generated by the organic chemicals industry can include
pH, Biochemical Oxygen Demand (BOD), Suspended Solids (TSS), oil and grease, a wide variety of toxic organic compounds and toxic metals. For the inorganic chemicals manufacturing industry, pollutants generated can include, pH, suspended solids, nutrients, and a wide variety of toxic inorganic compounds (including metals) (USEPA 1987, USEPA 1980).

Both organic and inorganic chemicals manufacturing use large volumes of water during production processes. Water is used for cooling reaction vessels, as a blending agent or carrier for raw materials, intermediates, and final products, and as a component in chemical reactions. Water is also used in large volumes at many facilities for cleaning reaction vessels and production areas and for removal of airborne materials (scrubbers). A more comprehensive description of water use and waste generation for the chemicals industry, in general, and the sulfur chemicals industry, in particular, is provided in Sections 4.1 and 4.2, below.

4.1 Water Use

Water use and wastewater generation are reported by USEPA (1987) to occur primarily in the following areas at an organic chemical manufacturing facility:

- Direct and indirect contact process water - Uses include the direct use of water as the reaction medium for the chemical process and indirect contact through vacuum jets or sprays to recover solvents and volatile organics from the reaction vessel.

- Contact and non-contact cooling water - Cooling of reactors, distillation units and other equipment results in the highest volume of water use at chemical manufacturing facilities. Contact cooling water is usually directly integrated in the reaction process, such as in a barometric condenser. Non-contact cooling water does not come into direct contact with process chemicals, and is generally uncontaminated.

- Utilities, maintenance and housekeeping - Ancillary water uses at chemical manufacturers can also consume significant quantities of water. Uses include cleaning of reactors and conduits, process area washdown, and flushing of tanks and storage vessels.

- Waters from air pollution equipment such as Venturi scrubbers - Many organic chemicals manufacturers generate significant volumes of airborne contaminants. Scrubbers used to remove these airborne pollutants utilize large volumes of water.

158

Although inorganic chemicals manufacturers utilize significantly different raw materials and processes to produce their chemical products, the areas of water use are quite similar to those in the organic chemicals industry.

Water is used extensively in the sulfur chemicals and soap and detergent manufacturing industries. In a comprehensive review of the soap and detergent manufacturing industry in the United States, USEPA (1974) identified water use practices for the following industry processes:

Soap Manufacture:

Steam is widely used in the heating and processing of fats; thus, cooling water is required for this process. In the kettle batch process, water use and discharge may range from 623 to 2080 l/kkg. Wastewater can be generated from leaks, spills, and rainwater runoff from processing areas. Wastewaters are also generated by the fat skimmers during the manufacturing process. Depending on the process used, a wastestream may also be generated by the saponification process through the sewering of waste nigre.

If a facility practices waste soap reclaiming, an additional wastestream referred to as "sewer lyes" may also be generated. Sewer lyes are usually low volume; however, they contain highly concentrated pollutants.

Where soaps are manufactured by the fatty acid neutralization process, there is little or no wastewater produced.

Fatty Acid Manufacture:

In the United States, USEPA determined that the majority of water used for fatty acid splitting was recycled. The small amount of water discharged results from blowdown from the cooling system and generates flows in the range of 3.2 to 12.6 l/sec. The other main source of waste water from this process is generated in the processing of still bottoms. The flow from this process is low; however the wastestream is highly concentrated.

Glycerine Recovery:

The crude glycerines generated during the soap manufacturing process contain approximately 90 percent water. The majority of wastewater generated by this process comes from the cooling water condensers. Where recycling is practiced, water use is relatively low; however, without recycling, flows may approach 1,000,000 l/kkg of glycerine produced. Smaller flows are also generated by still washout, steam generation, and ion exchange media regeneration.

259

Oleum Sulfonation and Sulfation:

The processes of sulfonation and sulfation are used to manufacture synthetic detergents from akylbenzenes, fatty alcohols, and alcohol ethoxylates. These manufacturing processes generate no process wastewater; however, water is used for clean-up and wastewater and may be generated by leaks and spills.

Spray Dried Detergents:

Cooling water is not used for this process. The majority of the wastewater generated by this process is from clean-up activities. In particular, if scrubbers are used to remove organic contaminants from the spray tower vent gasses, large volumes of scrubber water will be generated.

4.2 Waste Generation

Wastewaters generated at organic chemicals manufacturing facilities are somewhat more easily classified than those at inorganic chemicals manufacturing facilities due to the common feedstocks and processes. The pollutants introduced by inorganic chemicals manufacturers are directly related to the specific raw materials and processes utilized by a given facility. It is, therefore, beyond the scope of this paper to include an a comprehensive inventory of the types of wastes generated by the inorganic chemicals industry segment; thus, the majority of this section of the background paper will focus on the organic chemical industry.

The types of pollutants generated by an organic chemical manufacturer can be grouped into three general categories, and several additional subcategories as follow:

- **Conventional Pollutants** (Treatable by conventional biological methods)

  - Biochemical Oxygen Demand (BOD)
  - Total Suspended Solids (TSS)
  - pH
  - Chemical Oxygen Demand (COD)
  - Total Organic Carbon (TOC)
  - Oil and grease.

- **Toxic Pollutants** (Requiring specific physical, chemical or biological treatment)

  - Toxic Organic Pollutants
    - Wide variety of pollutants related to raw materials, intermediates, reaction media, and final products.

  - Toxic Inorganic Pollutants
    - Metallic elements and compounds related to raw materials, intermediates, reaction media, and final products.

- **Non-Conventional Pollutants** (Not highly toxic, but requiring special treatment)

  - Nutrients (e.g., nitrogen, phosphorus)
  - Sulfur Compounds
  - Chlorides

The sulfur chemicals and soaps and detergents industries generate wastewaters that contain primarily conventional and non-conventional pollutants. In particular, process wastestreams, contact cooling water, leaks, spills, and cleaning activities introduce raw materials, intermediates, and final product, lost through processing and clean-up, to the wastestreams. Production processes typically result in wastewaters that have high alkalinity, high suspended solids, high salt, and high oxygen demand, as well as fats an oils, surfactants and foaming agents. In addition to these parameters, the pH of the wastestreams can vary widely due to large volumes of acids and alkali materials used by this industry. USEPA's survey of the soap and detergent manufacturing industry (USEPA 1974) identified specific pollutants generated by the following processes.

Soap Manufacture:

Pollutants generated by the soap manufacturing processing include; fats and oils (raw materials); unrecovered sodium chloride, sodium sulfate and sodium hydroxide; and waste soap materials. These pollutants result in high BOD and COD, high suspended solids, and pH fluctuations.

Fatty Acid Manufacture:

This manufacturing process generates waste organic material in the form of waste fats and oils, and unrecovered glycerine, and inorganic wastes such as sodium hydroxide and sodium sulfate.

Glycerine Recovery:

Pollutants include glycerine and glycerine polymers, sodium chloride and sodium sulfate.

Oleum Sulfonation and Sulfation:

Wastes generated by these processes include waste oils, sulfuric acid, and surfactant sulfonic acids.

Spray Dried Detergents:

Pollutants include the raw materials used in the production of spray dried detergents such as LAS, amides, non-ionic and alcohol surfactants, sodium silicates, and other builders and additives.

USEPA reported pollutant concentrations in the wastestreams from the manufacturing processes in the soap and detergents industry in its 1974 study of this industrial sector. The findings of this study are presented in Exhibit 4-1.

Pollutant	Reported Concentration
Oils and greases	0-3,400 mg/l
Suspended organics	0-30,000 mg/l
Dissolved and colloidal organics	100-12,000 mg/l
Surfactant organics	0-1,700 mg/l
Boron and borates	less than 1 mg/l
Phosphates	25-1,000 mg/l
Dissolved inorganics	0-250,000 mg/l
Zinc and barium	less than 1 mg/l

Exhibit 4-1 Typical Pollutant Concentrations for the Soap and Detergent Manufacturing Industry
(From: USEPA. *Development Document for Soap and Detergent Manufacturing*. 1974)

262

5.0 POLLUTION PREVENTION AND WASTE MINIMIZATION TECHNIQUES USED BY THE CHEMICAL MANUFACTURING INDUSTRY

Due to the distinctive manufacturing processes at individual chemical facilities, PP/WM techniques practiced at one facility may not apply to all others. However, there are similarities in water use practices and types of wastes generated that may allow the sharing of successful technologies. Since no one set of PP/WM practices will apply to all facilities, decisions regarding water reuse and PP/WM will depend on site-specific characteristics, as well as well as water supply and environmental factors. This section, therefore, will present several alternatives that have proved successful in specific applications.

5.1 Water Conservation and PP/WM Techniques

The wastes generated by chemical manufacturing industries, excluding atmospheric discharges, are most often directly related to the contamination of the water used at the facility. It follows, therefore, that water conservation practices and control of water use at a chemical manufacturing facility will reduce chemical loss and waste generation. In addition to control of water use, many chemical manufacturers have identified wastestreams that contain unused raw materials, product, or by-products. Instead of discharging these materials as wastes, prudent companies have developed techniques for further processing and recovery of these former waste materials.

As noted in Section 4, many of the wastes generated by the chemicals manufacturing industry can be highly toxic to humans and wildlife. To address the reduction of discharges containing these toxic materials, a facility may wish to consider raw material or product substitution. The literature cites many examples of facilities that have found less toxic substitutes for existing chemical reagents. Examples are also provided of facilities that have identified less hazardous processes for producing equivalent final products.

For the organic chemicals industry, USEPA (1987) notes that the following water conservation techniques have been utilized:

- Recovery and reuse of steam condensates and process condensates
- Process modifications to recover more product solvents
- Effective control of cooling tower treatment and blowdown to optimize cycles of concentration
- Elimination of contact cooling for off-vapors
- Monitoring of water uses and prompt attention to faulty equipment, leaks, etc.
- Installation of automatic monitoring and alarm systems on in plant discharges.

These techniques may prove useful in conserving water and in minimizing pollutant losses to the wastestream.

Pollution prevention and waste minimization at sulfur chemicals and soap and detergent manufacturing facilities is directly related to control of water use and wastewater generation. Studies of this industry sector have determined that significant reduction in pollutant loadings can be achieved through efficient water use. In addition, many materials ordinarily discharged in soap and detergent manufacturing wastewater can be effectively recovered as saleable products (USEPA 1974).

In addition to the specific practices noted below, all chemical industries should perform complete water balances. Due the age and complexity of many manufacturing facilities, plumbing and piping diagrams are often incomplete. A complete and comprehensive inventory and assessment of water use and disposal, therefore, is a critical first step in any PP/WM effort. Many inefficient water use practices, and opportunities for potential recycling can be identified through these studies.

In its evaluation of this industrial sector, USEPA grouped PP/WM techniques in three broad categories based on the source of the pollutant introduction: 1) impurities removal; 2) by-product/degradation product control; and 3) dilute product from cleanouts, leaks and spills. The following PP/WM techniques, organized by pollutant source, have been demonstrated successfully by this industry:

Impurities Removal

In many applications, the barometric condensers can be replaced by surface condensers that can reduce water use by several orders of magnitude and reduce the amount of organic contamination by up to 80 percent.

Alternatively, the operation of barometric condensers can be modified for more efficient operation. If water from the barometric condensers is recycled through fat skimmers, organic material ordinarily discharged from these processes can be recovered and reclaimed. Reductions in waste of raw materials can be expected in the range of 75 percent. The removal efficiency of the oil and grease removal can also be enhanced by the installation of chemically assisted flocculation systems.

Glycerine removal can also be achieved by installation of surface condensers and vacuum extraction equipment. While this the initial capital cost for this type of system is high, glycerine recovery of up to 90 percent can be achieved. The pay back period for this system is reported to be approximately 10 years.

By-product/degradation Product Control

Where batch kettle soap making is practiced, the waste nigre can be recovered and reclaimed for products such as pet soap or industrial lubricants. The capital costs would include construction of an accumulator tank for material storage and treatment for fat recovery. These systems can achieve a reduction in raw waste load of 75 to 80 percent.

The degradation of product in the sulfonation process can result in a large volume wastestream. This problem occurs in all sulfonation processes; however, it is more serious in smaller volume operations. Installation of a batch countercurrent process with enhanced agitation for improved heat transfer and improved mixing can reduce waste generation. Costs are reportedly minimal for these systems.

Dilute Product from Cleanouts, Leaks and Spills

In the manufacture of liquid detergents, large volumes of water are used to clean reaction tanks and feedlines during product changeover and cleanup operations. Substituting "dry" cleaning operations can significantly reduce water use and waste generation. For example, air or steam can be used instead of water to empty feed lines. It may also be possible to reconfigure plumbing to utilize relatively uncontaminated wastestreams.

Facilities that operate detergent spray towers can minimize water use by utilizing water recycling practices. One possible arrangement involves the use of vent gas scrubber streams in series. The more contaminated streams from the "first stage" scrubber can be recycled to the crutcher and the less contaminated second stage wastestream would be cooled and returned to the first stage scrubber. Capital costs are reportedly moderate and raw wastes can be reduced up to 65 percent.

Many additional PP/WM techniques have been reported in the literature for specific chemical industry applications. A recent publication by Dorfman, et al., (1992) provides over 100 PP/WM techniques practiced by organic and inorganic chemicals manufacturers in the United States. While not all of these examples will apply to this industrial sector, certain technologies may provide ideas or inspiration for additional applications. Excerpts from this document (reprinted by permission from the author), as well as case studies from several other literature sources, are provided in Appendix B of this paper.

5.2 Effluent Control and Treatment Technologies

Treatment technologies for the chemical manufacturing industry vary widely depending on the type of waste being treated. A complete review of the types of technologies used by the industry is, therefore, beyond the scope of this paper. A brief overview of the general types of technologies, however, is provided to identify commonly used processes. Processes utilized by the industry consist of physical/chemical in-plant controls, and "end-of-pipe" physical/chemical and/or biological treatment units (USEPA 1987, USEPA 1980). Treatment processes described in USEPA chemical industry studies are provided below.

Chemical manufacturing facilities often utilize physical/chemical "in-plant" control technologies. These operations are designed to recover products or solvents, to reduce pollutant loadings on subsequent biological treatment units and to remove pollutants that subsequent treatment may be unable to adequately treat. In plant treatment can include:

265

- Process modifications
- Addition of control instrumentation
- Installation of solvent recovery units
- Water control and reuse technologies (See Section 5-1)

End of pipe treatment technologies include physical, chemical and or biological treatment units. Treatment for the organic chemicals industry typically consists of a combination of primary (neutralization and settling), secondary (biological high-rate aeration and clarification), polishing, and/or tertiary (polishing ponds, filtration, or carbon adsorption) operations. End of pipe treatment for inorganic chemicals manufacturers is designed specifically to remove the pollutants generated at a given facility. Treatment generally consists of physical and chemical unit operations such as: primary settling and neutralization, chemical precipitation and clarification, ion exchange, and filtration. Depending on the products and raw materials used at facility, other more chemical specific treatment units may be utilized on a site-specific basis.

The sulfur chemicals and soap and detergent manufacturing industry generally utilize well established physical, chemical and biological treatment systems for pollutant control. As described in Section 4 of this paper, the majority of the pollutants generated by this industrial sector are not highly toxic and can be treated by relatively uncomplicated treatment technologies. A list of the treatment processes commonly used for removal of various pollutants is provided in Exhibit 5-1.

The treatment and removal of free and emulsified oils and greases is typically accomplished by gravity separation, physical filtration and/or floatation. These treatment processes may be used alone or in combination depending on the nature of the oils and greases to be treated and the strength of the wastestream. Where oils are highly dispersed, or where organic solvents are present, activated carbon filters may also be used. The removal efficiency of these systems is provided in Exhibit 5-2.

Suspended solids may be removed through coagulation and settling and/or mixed media filtration. These types of treatment systems are highly effective on the suspended solids generated by the soap and detergent manufacturing processes. Typical removals are provided in Exhibit 5-2.

Suspended and dissolved biodegradable organics are effectively removed using biological treatment systems such as aerated lagoons, activated sludge basins, contact stabilization and/or trickling filters. Since most organic contaminants generated by facilities in this category are biodegradable, these types of systems are frequently utilized. Where organic contaminants are not readily biodegradable, carbon adsorption systems may be utilized. These systems may use activated carbon towers, or may add powdered carbon to the wastestream for subsequent removal. The efficiency of these treatment units in treating wastes from this industry are provided in Exhibit 5-2.

Pollutants	Treatments
Free and emulsified oils and greases	1. Gravity separation 2. Coagulation and sedimentation 3. Carbon adsorption 4. Mixed media filtration 5. Flotation
Suspended Solids	1. Plain sedimentation 2. Coagulation-sedimentation 3. Mixed media filtration
Dispersed Organics	1. Bioconversion 2. Carbon adsorption
Dissolved Solids (Inorganic)	1. Reverse osmosis 2. Ion exchange 3. Sedimentation 4. Evaporation
Unacceptable Acidity or Alkalinity	1. Neutralization
Sludge obtained from or produced in process	1. Digestion 2. Incineration 3. Lagooning 4. Thickening 5. Centrifuging 6. Wet oxidation 7. Vacuum filtration

Exhibit 5-1 Treatment Methods Used by the Soap and Detergent Manufacturing Industry
(From: USEPA. *Development Document for Soap and Detergent Manufacturing*. 1974)

167

Pollutant and Method	Efficiency (Percentage of Pollutant Removed)
Oil and Grease	
API type separation	Up to 90 percent of free oils and greases. Variable on emulsified oil.
Carbon adsorption	Up to 95 percent of both free and emulsified oils.
Flotation	Without the addition of solid phase, alum or iron, 70-80 percent of both free and emulsified oil. With the addition of chemicals, 90 percent
Mixed media filtration	Up to 95 percent of free oils. Efficiency in removing emulsified oils unknown.
Coagulation-sedimentation with iron, alum or solid phase (bentonite, etc.)	Up to 95 percent of free oil. Up to 90 percent of emulsified oil.
Suspended Solids	
Mixed media filtration	70-80 percent
Coagulation-sedimentation	50-80 percent
Chemical Oxygen Demand	
Bioconversions (with final clarifier)	60-95 percent or more
Carbon adsorption	Up to 90 percent
Residual Suspended Solids	
Sand or mixed media filtration	50-95 percent
Dissolved Solids	
Ion exchange or reverse osmosis	Up to 99 percent

Exhibit 5-2 Relative Efficiency of Several Methods Used to Remove Pollutants
(From: USEPA. *Development Document for Soap and Detergent Manufacturing*. 1974)

As indicated in the discussion of industry processes in Section 3, the sulfur chemicals and soap and detergent manufacturing industry may operate several very different unit processes using many raw materials to produce intermediates and final products. The treatment systems for these facilities, therefore, must be tailored to the specific unit processes and the types of wastes generated by each facility. In addition, the proximity of each of the unit processes to each other may determine whether treatment processes can be centralized, treating a variety of wastestreams, or whether each wastestream will require individual treatment. An example of an integrated treatment flow sheet for the soap and detergent manufacturing industry is provided in Exhibit 5-3. While this treatment scheme will not apply to all facilities, it provides a useful schematic describing the placement and configuration of the various treatment units.

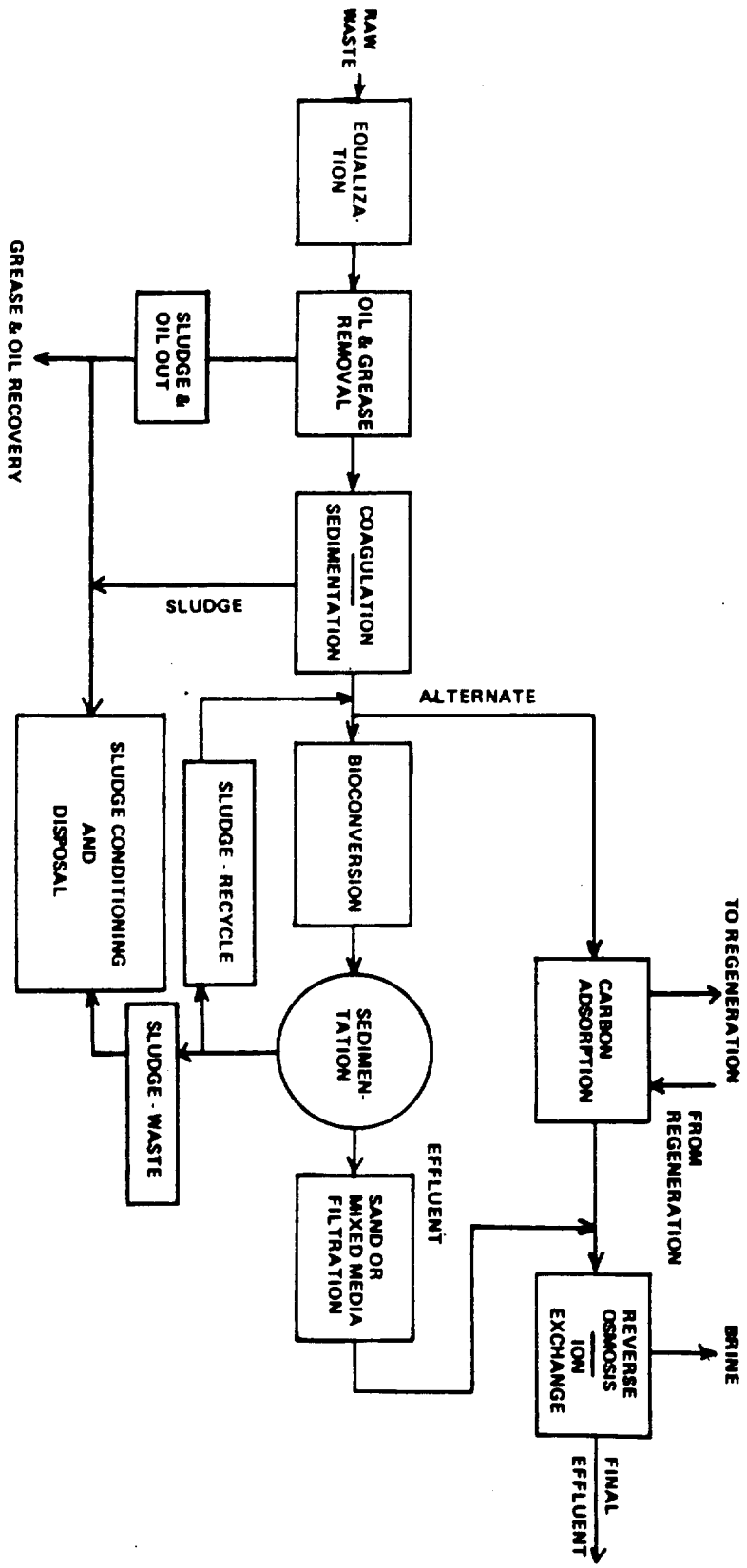

Exhibit 5-3 Composite Flow Sheet for Waste Treatment
(From: USEPA. *Development Document for Soap and Detergent Manufacturing*. 1974)

270

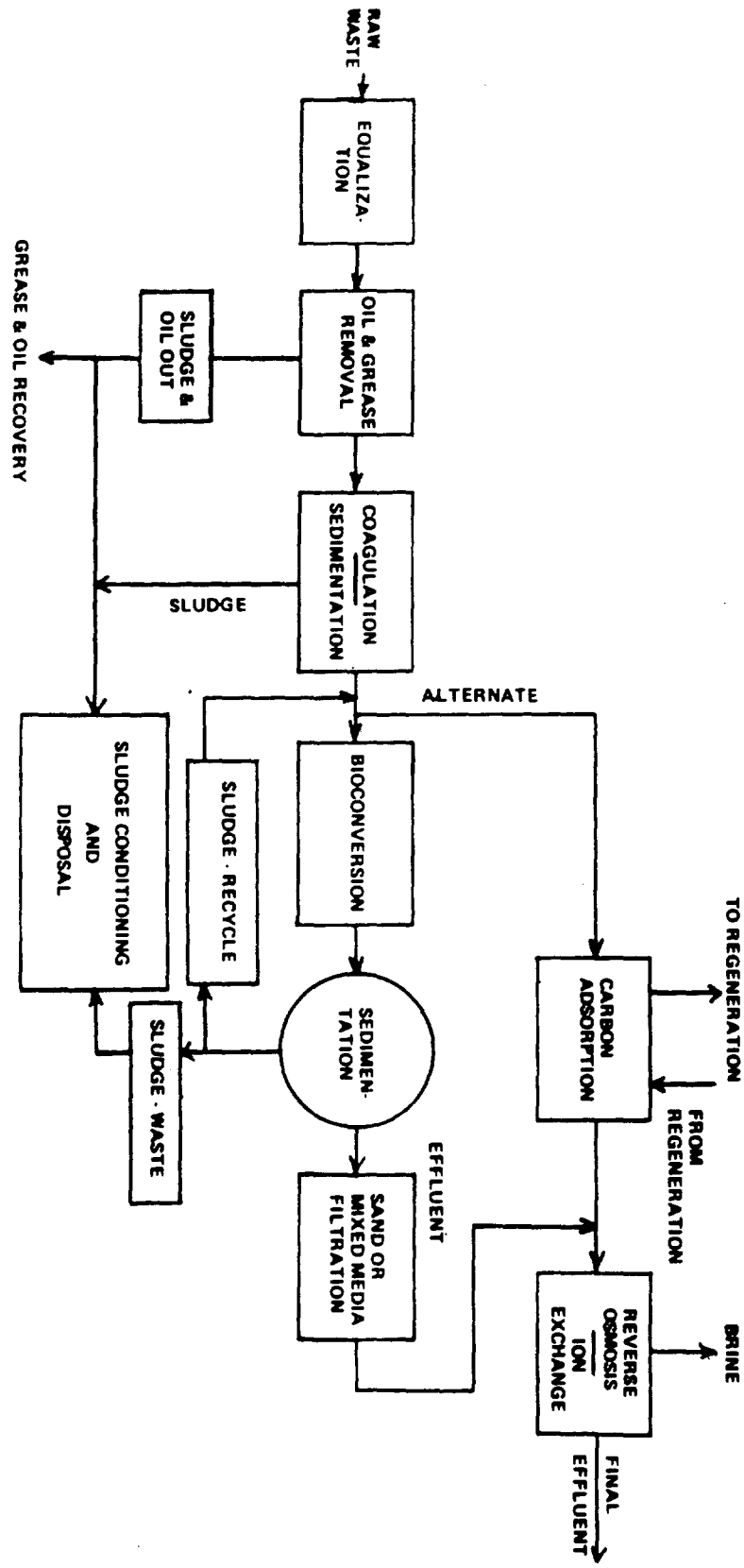

Exhibit 5-3 Composite Flow Sheet for Waste Treatment
(From: USEPA. *Development Document for Soap and Detergent Manufacturing*. 1974)

270

6.0 BIBLIOGRAPHY

General Pollution Prevention and Waste Minimization:

U.S. EPA. Guidance Manual for Developing Best Management Practices (BMP). Office of Water, United States Environmental Protection Agency. EPA 833-B-93-004. 1993.

U.S. EPA. 1993 Reference Guide to Pollution Prevention Resources. Office of Pollution Prevention and Toxics, United States Environmental Protection Agency. EPA/742/B-93-001. 1993.

U.S. EPA. Facility Pollution Prevention Guide. Office of Solid Waste and Risk Reduction Engineering Laboratory, United States Environmental Protection Agency. 1991.

U.S. EPA. Waste Minimization Opportunity Assessment Manual. Hazardous Waste Engineering Research Laboratory, United States Environmental Protection Agency. EPA/625/7-88/003. 1988.

Overcash, M.R. Techniques for Industrial Pollution Prevention. Lewis Publishers., Chelsea, MI. 1986.

Chemical Manufacturing Industry:

Dorfman, M.H., et al. Environmental Dividends - Cutting More Chemical Wastes. Inform, Inc., New York. 1992.

Tillman, J.W. Achievements in Source Reduction and Recycling for Ten Industries in the United States. SAIC Report prepared for Risk Reduction Engineering Laboratory, United States Environmental Protection Agency. 1991.

U.S. EPA. Development Document for Effluent Limitations Guidelines, New Source Performance Standards and Pretreatment Standards for the Organic Chemicals and the Plastics and Synthetic Fibers Point Source Category - Vols. I and II. Industrial Technology Division, United States Environmental Protection Agency. October 1987.

Sittig, M. Organic and Polymer Waste Reclaiming Encyclopedia. Noyes Data Corporation, Park Ridge, NJ. 1981.

U.S. EPA. Development Document for Proposed Effluent Limitations Guidelines, New Source Performance Standards, and Pretreatment Standards for the Inorganic Chemicals Manufacturing Point Source Category. Office of Water and Waste Management, United States Environmental Protection Agency. June 1980.

Cavaseno, V. Process Technology and Flowsheets. Prepared for Chemical Engineering, McGraw-Hill, New York. Undated.

Sulfur Chemical Industry:

Kirk-Othmer Encyclopedia of Chemical Technology. Third Edition. Vols. 2, 20, 22. John Wiley and Sons, New York. 1983.

U.S. EPA. Development Document for Effluent Limitations Guidelines and New Source Performance Standards - Soaps and Detergents Manufacturing Point Source Category. United States Environmental Protection Agency. EPA Report No. 440/1-74/018-A. April 1974.

Appendix F

PP/WM Background Report

JORDAN SULPHOCHEMICALS

STS PRODUCTION PLANT

Process Description.

Scope of the plant is the production of STS (Sodium Toluen Sulphonate), starting from Toluene, Sulphuric Acid and Sodium Hydroxide, according to the following reactions:

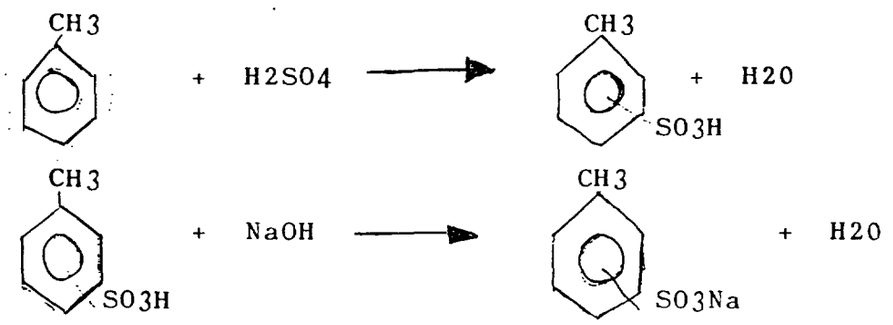

The process is discontinuous, therefore a batch operation is performed in a single reactor, 21R1, stirred and provided with jacket by either steam heating or water cooling.
The raw materials are supplied by feeding pumps, from tank area and are proportioned, into the reactor, by means of the meters FQS 21.1 - 21.2 - 21.3.
When the feeding of raw material has reached the set value, the meter closes the valve and stops the feeding pump.
The sequence of the operation is the following:

.../2

274

the toluene is fed into the reactor through the meter FQS 21.1. A large excess against the stoichiometric of toluene must be supplied in order to obtain a good reaction yield.
The concentrated sulphuric acid (95% by weight minimum) is slowly metered into the reactor.

The sulphonation reaction is exothermic, and the developed heat raises the mixture temperature up to the minimum boiling point of the azeotrope toluene-water; the produced vapors are condensed in 21E1, and the liquid is settled in 21V2; the upper phase, toluene, is recycled into the reactor while the reaction water is removed and collected in the vessel 21V4.

At the end of the sulphuric acid loading, it takes some hours for the reaction to reach the required yield.
The product is still kept at its boiling point, and the water is continuously removed as described above.

When the required sulphonation degree is reached, the mixture is maintained at its boiling point by steam-heating, but the condensed toluene is diverted into the vessel 21V3.

Some water is then added into the reactor, from FQS 21.2, in order to help the removal of the toluene, still present in the product.

The toluene is removed as water-toluene azeotrope, the condensed vapors are settled, the water is recycled into the reactor

../3

275

while the toluene is collected into V102.

The neutralization takes place in the same reactor 21R1. The caustic soda solution, stoichiometric required, is slowly fed into 21R1, by means of the pump 06P6 the proper quantity is automatically selected by the meter FQS 21.1.

The reaction heat raises the temperature up to the boiling point; in this operating step, the last traces of toluene are removed from the product.

The pH is controlled and corrected during the neutraliza - tion.

After a proper ageing time, the product is cooled and dis - charged into 21V1; then it is continuously fed by 21P1 to the dryer or sent to the storage by 21P2, as STS aqueouse so- lution or to the drying section into the surge vessel V201.

276

B - DRYING SECTION (see Dwg.1171.10.008)

The drying section is composed of a spray drying tower where the product, coming from the production line as aqueouse solution, is dried up with a hot air stream, from which the dry product is removed by a cyclone and a sleeve filter.

This section operates continuously.

The product is collected, as aqueous solution, into the surge tank 21V1 and it is fed, by means of the high pressure pump 21P1, into the drying tower 21AT1, through a nozzles system.

The water latent heat of vaporization, is supplied as air sensible heat; the streams are put in contact cocurrently in the tower from the top to the bottom.

The hot air is fed into the tower from the air heater H201, where its temperature is controlled diluting the combustion gases, coming from the burner, with fresh air, blown into the heater by the fan 21K1.

The combustion air, fed by the fan 21K2, and the fuel oil are sent to the burner 21H1 at fuel/air ratio, manually controlled.

../5

277

The dry product, carried by the air, leaves the tower from the bottom and is sent into the cyclone 21S1 where is collected and discharged by means of the double flap dischargers.

The air passes then through the sleeve filter 21F3 to collect the last traces of powder and it is sent to the atmosphere by the fan 21K3.

The double flap dischargers 21WG1 and 21WG2, connected to the cyclone and the filter bottoms, feed the dry product storage silo.
From the silo, a worm extracts the powder and feeds the packaging unit hopper.

An empty bag is manually attached by means of the pliers at the sack holder.

Then the operator acts on a tilting lever; it causes the following operations:

- the mixer starts loosing the product during the filling operations;
- the full and dribble flow gate is opened and the product flows into the bag;
- after filling with full flow the gate is closed, then the bag is filled in dribble flow, in order to reach

../6

218

the exact weight.

The bag is then discharged on a belt conveyor and seamed.

ENM/Process Department
/pl/24/8/84

DOC.163/84

BALLESTRA S.p.A. MILANO (ITALIA)	CLIENTE / CUSTOMER: JORDAN SULPHO CHEMICALS CO.	SH. 1
	LOCALITÀ / LOCALITY: AMMAN JORDAN	
	COMMESSA / JOB: 1552 — CONTRATTO / CONTRACT	
	IMPIANTO / PLANT: STS PRODUCTION PLANT	FIGN
	REPARTO / DEPARTMENT: BATCH MATERIAL BALANCE	SCHEMA / SCHEME

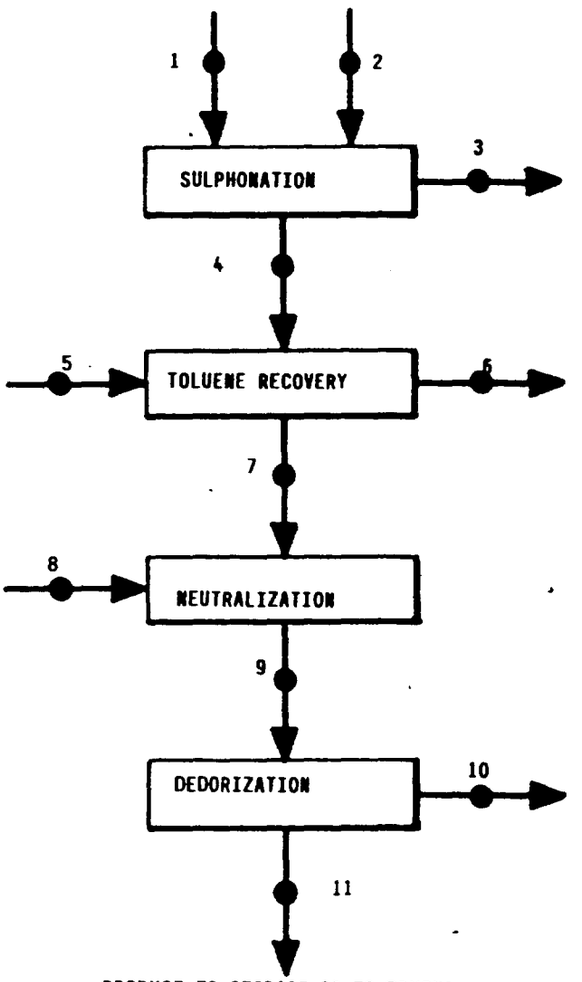

DESCRIPTION \ N° LINE		1	2	3	4	5	6	7	8	9	10	11
TOLUENE	KG	1655	–	–	330.5	–	327.5	3	–	3	3	–
SULPHURIC ACID 100%	"	–	1438	–	38	–	–	38	–	–	–	–
WATER	"	–	75	284	50	128	51	127	897	1293	197	1096
TSA	"	–	–	–	2438	–	–	2438	–	–	–	–
SULPHONES	"	–	–	–	27.5	–	–	27.5	–	27.5	–	27.5
CAUSTIC SODA 100%	"	–	–	–	–	–	–	–	598	–	–	–
STS	"	–	–	–	–	–	–	–	–	2750	–	2750
SODIUM SULPHATE	"	–	–	–	–	–	–	–	–	55	–	55
TOTAL	KG	1655	1513	284	2884	128	378.5	2633.5	1495	4128.5	200	3928.5

REV.	DESCRIZIONE - DESCRIPTION	CORR. PREP'D	APPR. APPR'D	DATA DATE
0	EMISSIONE - ISSUE	CZG/gc		29-8-89

MOD. 1360

THIS DRAWING REMAINS OUR PROPERTY AND SHALL NOT BE USED EXCEPT WITH PERMISSION. ALL RIGHTS RESERVED.

QUESTO DISEGNO RIMANE DI NOSTRA PROPRIETÀ E NON PUÒ ESSERE USATO SENZA LA NOSTRA AUTORIZZAZIONE. TUTTI I DIRITTI RISERVATI.

280

BALLESTRA S.p.A.
MILANO (ITALIA)

CUSTOMER	JORDAN SULPHO CHEMICAL CO.	SH.2
LOCALITY	AMMAN JORDAN	
JOB	1552	
PLANT	STS PRODUCTION PLANT	
DEPARTMENT	SPRAY DRYING	

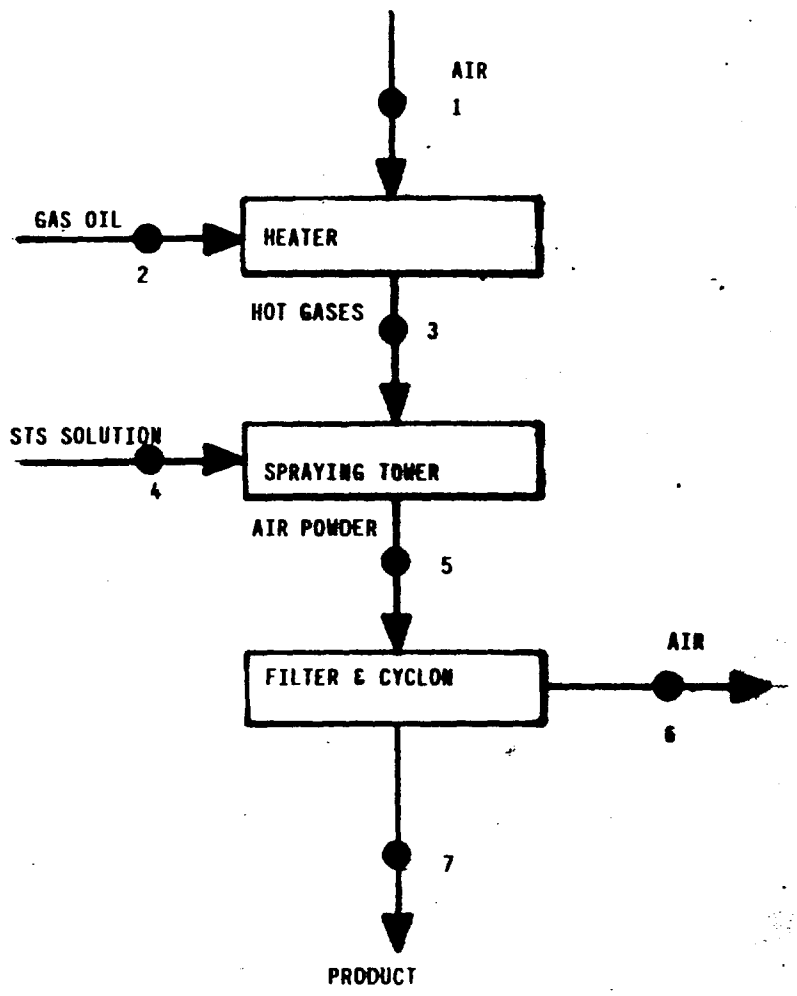

DESCRIPTION \ N° LINE		1	2	3	4	5	6	7	/	/	/	/
AIR	KG/H	3500	–	–	–	–	–	–				
GAS OIL	"	–	18	–	–	–	–	–				
HOT GASES	"	–	–	3518	–	–	–	–				
STS SOLUTION	"	–	–	–	360	–	–	–				
NO ST GASES	"	–	–	–	–	3600	3600	–				
STS POWDER	"	–	–	–	–	278	–	278				
TOTAL	KG/H	3500	18	3518	360	3878	3600	278				

REV.	DESCRIZIONE - DESCRIPTION		
0	EMISSIONE - ISSUE	CZG/gc	29-8-198

QUESTO DISEGNO RIMANE DI NOSTRA PROPRIETÀ E NON PUÒ ESSERE USATO SENZA LA NOSTRA AUTORIZZAZIONE. TUTTI I DIRITTI RISERVATI.

THIS DRAWING REMAINS OUR PROPERTY AND SHALL NOT BE USED EXCEPT WITH PERMISSION. ALL RIGHTS RESERVED.

28

BALLESTRA S.p.A. MILANO (ITALIA)	CLIENTE CUSTOMER: JORDAN SULPHO CHEMICAL CO.	SH.3
	LOCALITÀ LOCALITY: AMMAN JORDAN	
	COMMESSA JOB: 1552 — CONTRATTO CONTRACT	
	IMPIANTO PLANT: STS PRODUCTION PLANT	FOGLIO SHEET
	REPARTO DEPARTMENT	DISEGNO DRAWING

BATCH TIME SCHEDULE

TIME REQUIRED FOR 1 BATCH: 11 HOURS

OPERATION	STEAM FROM	TO	EXPECTED TIME
TOLUENE CHARGING	06P8	FQS 21.1/21R1	20'
SULPHURIC ACID CHARGING	06P10	FQS 21.3/21R1	360'
WATER CHARGING	FQS 21.2	21R1	10'
TOLUENE RECOVERY	21R1	21V2-21V3	100'
PRODUCT COOLING			45'
SODA CHARGING & NEUTRALIZATION	06P6	21FQS1-21R1	60'
REMOVAL OF LAST TRACES OF TOLUENE (UNDER VACUUM)	21R1	21V2-21V3	20'
PRODUCT COOLING & DISCHARGE	21R1	21V1	45'
TOTAL TIME			660'

THIS DRAWING REMAINS OUR PROPERTY AND SHALL NOT BE USED EXCEPT WITH PERMISSION. ALL RIGHTS RESERVED.

QUESTO DISEGNO RIMANE DI NOSTRA PROPRIETÀ E NON PUÒ ESSERE USATO SENZA LA NOSTRA AUTORIZZAZIONE. TUTTI I DIRITTI RISERVATI.

REV.	DESCRIZIONE - DESCRIPTION	DISEGNATO	APPROV.	DATA
0	EMISSIONE - ISSUE	CZG/gc		29-8-198

BALLESTRA S.p.A.
MILANO (ITALIA)

CUSTOMER	JORDAN SULPHO CHEMICAL
LOCALITÀ / LOCALITY	AMMAN JORDAN
COMMESSA / JOB	1552
CONTRATTO / CONTRACT	
IMPIANTO / PLANT	SX CD/F
REPARTO / DEPARTMENT	SIS PRODUCTION UNIT
ITEM	
SCHEMA / SCHEME	

UTILITIES CONSUMPTIONS

A) STEAM - (BARS -6)

FLOW RATE (Kg/h)		HENTALPY VARIATION Kcal/h H	
AVERAGE	PEAK	AVERAGE	PEAK
70	220	34.720	108.900

B) COOLING WATER

FLOW RATE m3/h		H Kcal/h		AT °C	
AVERAGE	PEAK	AVERAGE	PEAK	AVERAGE	PEAK
14	50	140.000	370.000	10	7,4

C) FUEL OIL

TYPE: GAS OIL	FLOW RATE (Kg/h): 18

D) COMPRESSED AIR (6 Bar)

D_1: INSTRUMENT AIR	Nm^3/h	AVERAGE	1
		PEAK	12
D_2: SERVICE AIR	Nm^3/h	AVERAGE	14
		PEAK	/

E) ELECTRIC POWER

TOTAL INSTALLED POWER: KW	56,5
AVERAGE ABSORBED POWER/ KW	35

THIS DRAWING REMAINS OUR PROPERTY AND SHALL NOT BE USED EXCEPT WITH PERMISSION. ALL RIGHTS RESERVED.

QUESTO DISEGNO RIMANE DI NOSTRA PROPRIETÀ E NON PUÒ ESSERE USATO SENZA LA NOSTRA AUTORIZZAZIONE. TUTTI I DIRITTI RISERVATI.

REV	EMISSIONE - ISSUE / DESCRIZIONE - DESCRIPTION	COMP PREP'D	APPR APPR'D	DATA DATE

MOD 1360

JORDAN SULPHOCHEMICALS

ALKANOLAMIDES PRODUCTION

Process description

The unit can perform the production of all types of alkanolamides, by condensating either fatty acids or eventually methylesters, with monoethanolamine or diethanolamide, according to the following reactions:

i) = via fatty acid

$$R - \overset{O}{\overset{\|}{C}} - OH + NH_2-CH_2-CH_2-OH \xrightleftharpoons{CH_3ONa} R-\overset{O}{\overset{\|}{C}}-NH-CH_2-CH_2-OH + H_2O$$

ii) = via methylester

$$R - \overset{O}{\overset{\|}{C}} - OCH_3 + NH_2-CH_2-CH_2-OH \xrightleftharpoons{CH_3ONa} R-\overset{O}{\overset{\|}{C}}-NH-CH_2-CH_2-OH + CH_3OH$$

The raw materials are supplied by pumps from the tank area and proportioned into the reactor, by means of the fluidmeter FQS 21.1, which stops the pumps and shuts down the valves, when the required quantity of raw material has been loaded.

../2

The reaction is carried out batchwise into the reactor 21R1.

The temperature is raised up to 90÷100°C (according to the raw materials that are beeing processed), supplying steam into the jacket; vacuum operation, required to prevent oxidative phoenomena, and to facilitate the evaporation of the by-product of reaction, is performed by the liquid ring pump 21P4.
The water evolved, is condensed in 21E1 with cooling water and collected into 21V4.
When methylesters are processed, methanol is evolved, condensed with low temperature brine, collected into 21V4, and sent to the b.l. by the 21P3 pump.

When the reaction has taken place, the product is discharged into 21V1, and it is transformed by the 21P1 pump to the feeder of the flacking machine 21X2; the product is distributed by gravity onto the surface of a belt cooler, which is sprayed with cooling water from below.

The product is cooled and flaked; then it is sent by the bucket elevator 21NT1 to the bagging unit.

If the product discharged from the reactor is liquid atroom temperature, it is sent directly to the storage.

ENM/Process Department
pl/30/8/84
DOC.168/84

BALLESTRA S.p.A. MILANO (ITALIA)	CLIENTE / CUSTOMER: JORDAN SULPHOCHEMICAL	
	LOCALITÀ / LOCALITY: AMMAN JORDAN	
	COMMESSA / JOB: 1552 — CONTRATTO / CONTRACT	
	IMPIANTO / PLANT: ALKANOLAMIDES PRODUCTION PLANT	ITEM
	REPARTO / DEPARTMENT	SCHEMA / SCHEME

BATCH TIME SCHEDULE

TIME REQUIRED FOR 1 BATCH: 5 HOURS

OPERATION	STEAM FROM	TO	EXPECTED TIME
FATTY ACID - METHYLESTER CHARGING	06P12	FQS 21.1-21R1	20'
AMINE CHARGING	06P14	FQS 21.1-21R1	20'
CATALIST CHARGING	-	21R1	20'
HEATING & REACTION	-	-	180'
STRIPPING OF BY PRODUCT	21R1	21V2	30'
DISCHARGING	21R1	21V1	30'
TOTAL TIME			300'

THIS DRAWING REMAINS OUR PROPERTY AND SHALL NOT BE USED EXCEPT WITH PERMISSION. ALL RIGHTS RESERVED.

QUESTO DISEGNO RIMANE DI NOSTRA PROPRIETÀ E NON PUÒ ESSERE USATO SENZA LA NOSTRA AUTORIZZAZIONE. TUTTI I DIRITTI RISERVATI.

REV	DESCRIZIONE · DESCRIPTION	COMP PREP	APPR APPR	DATA DATE
	EMISSIONE · ISSUE	EM/gc		31-8-1984

286

BALLESTRA S.p.A. MILANO (ITALIA)		
CLIENTE CUSTOMER	JORDAN SULPHOCHEMICALS	
LOCALITÀ LOCALITY	AMMAN JORDAN	
COMMESSA JOB	1552	CONTRATTO CONTRACT
IMPIANTO PLANT	ALKANOLAMIDES PRODUCTION PLANT	ITEM
REPARTO DEPARTMENT	BATCH MATERIAL BALANCE	SCHEMA SCHEME

1) PRODUCT: COCO MONO ETHANOLAMIDE FROM FATTY ACID (M.W. 243)

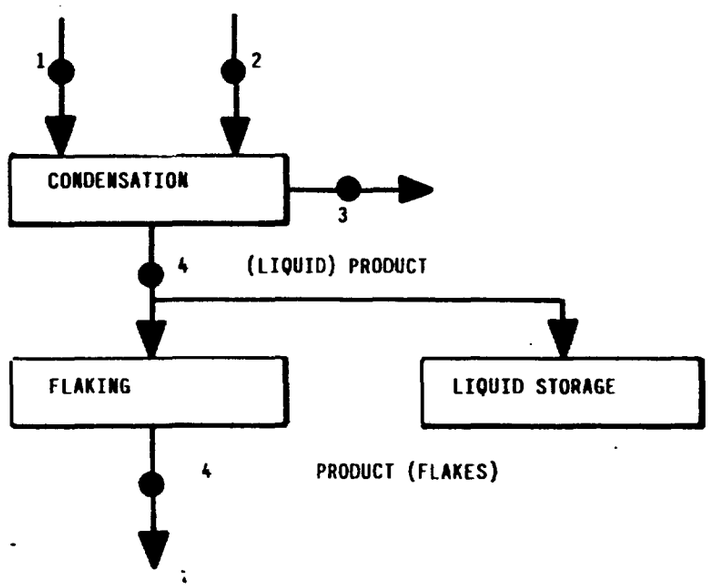

DESCRIPTION / LINE N°		1	2	3	4							
FATTY ACID (MW 200)	KG	3167.5			40							
MONOETHANOLAMINE	KG		1114		160							
WATER	KG			281.5								
ETHANOLAMIDE 243	KG				3800							
TOTAL	KG	3167.5	1114	281.5	4000							

REV	DESCRIZIONE · DESCRIPTION	COMP	APPR.	DATA
	EMISSIONE · ISSUE	CZG/gc		

THIS DRAWING REMAINS OUR PROPERTY AND SHALL NOT BE USED EXCEPT WITH PERMISSION. ALL RIGHTS RESERVED

QUESTO DISEGNO RIMANE DI NOSTRA PROPRIETÀ E NON PUÒ ESSERE USATO SENZA LA NOSTRA AUTORIZZAZIONE. TUTTI I DIRITTI RISERVATI.

BALLESTRA S.p.A. MILANO (ITALIA)		
CLIENTE / CUSTOMER	JORDAN SULPHOCHEMICAL	
LOCALITÀ / LOCALITY	AMMAN JORDAN	
COMMESSA / JOB	1552	CONTRATTO / CONTRACT
IMPIANTO / PLANT	ALKANOLAMIDES PRODUCTION PLANT	ITEM
REPARTO / DEPARTMENT		SCHEMA / SCHEME

2) PRODUCT: COCO MONO ETHANOLAMIDE STARTING FROM FATTY METHYLESTER

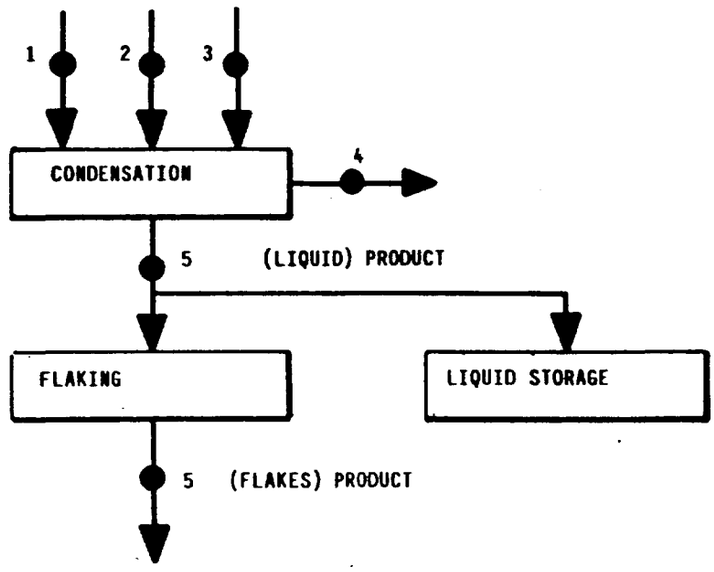

DESCRIPTION / LINE N°		1	2	3	4	5
FATTY METHYLESTER	KG	3386.5				40
MONOETHANOLAMINE	KG		1082			128
METHANOL (MW32)	KG				500.5	-
COCOMONOETHANOLAMIDE	KG					3800
SODIUM METHILATE	KG			32		32
TOTAL	KG	3386.5	1082	32	500.5	4000

REV	DESCRIZIONE · DESCRIPTION	COMP PREP'D	APPR. APPR'D	DATA DATE
	EMISSIONE · ISSUE	EM/gc		

THIS DRAWING REMAINS OUR PROPERTY AND SHALL NOT BE USED EXCEPT WITH PERMISSION. ALL RIGHTS RESERVED.

QUESTO DISEGNO RIMANE DI NOSTRA PROPRIETÀ E NON PUÒ ESSERE USATO SENZA LA NOSTRA AUTORIZZAZIONE. TUTTI I DIRITTI RISERVATI.

MOD

288

BALLESTRA S.p.A. MILANO (ITALIA)		
CLIENTE / CUSTOMER	JORDAN SULPHOCHEMICAL	
LOCALITÀ / LOCALITY	AMMAN JORDAN	
COMMESSA / JOB	1552	CONTRATTO / CONTRACT
IMPIANTO / PLANT	ALKANOLAMIDES PRODUCTION PLANT	ITEM
REPARTO / DEPARTMENT		SCHEMA / SCHEME

3) PRODUCT: COCODIETHANOLAMIDE STARTING FROM FATTY METHYLESTER

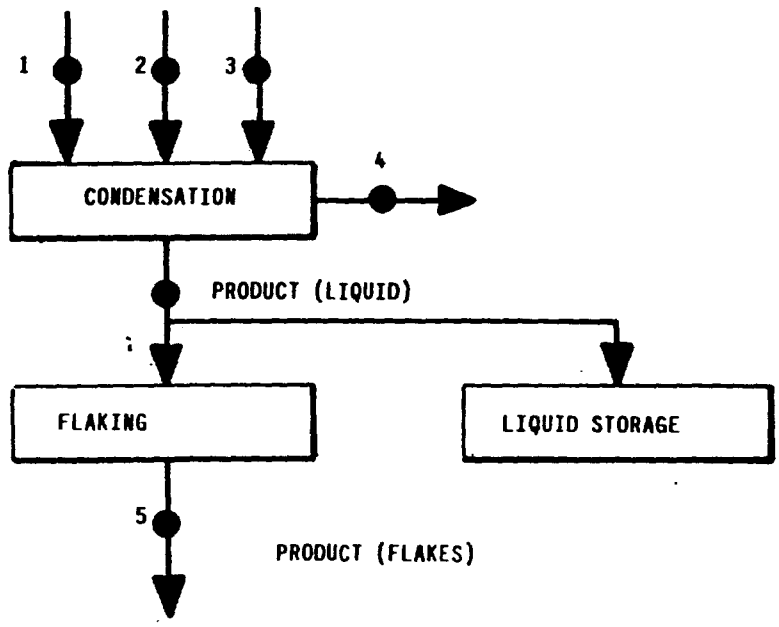

DESCRIPTION / LINE N°		1	2	3	4	5
DIETHANOLAMINE	KG		1776			532
FATTY METHYLESTER	KG	2575				40
SODIUM METHYLATE	KG			28		28
METHANOL	KG				379	–
COCO DIETHANOLAMIDE	KG					3400
TOTAL	KG	2575	1776	28	379	4000

REV	EMISSIONE · ISSUE / DESCRIZIONE · DESCRIPTION	PREP'D	APPR'D	DATA / DATE
		EM/gc		

QUESTO DISEGNO RIMANE DI NOSTRA PROPRIETÀ E NON PUÒ ESSERE USATO SENZA LA NOSTRA AUTORIZZAZIONE. TUTTI I DIRITTI RISERVATI.

THIS DRAWING REMAINS OUR PROPERTY AND SHALL NOT BE USED EXCEPT WITH PERMISSION. ALL RIGHTS RESERVED.

BALLESTRA S.p.A.

20138 MILANO (ITALIA)
VIA G. FANTOLI, 21/17

Distinta N.° / List. N.° / Liste. N.°: 890/84

Foglio / Sheet / Feuille: 1 di / of / de

Data / Date / Date: 3/8/1984

Progetto / Contract / Projet: 1171

Commessa / Job / Commande: 1552

Ns. Riferimento / Re / Ref.: GR/ES

Visto / Signature / Signature:

A:
To: JORDAN SULPHOCHEMICALS CO.
A: P.O. Box 811643
AMMAN - Jordan

Ci pregiamo accluderVi i seguenti disegni:
Please find enclosed the following drawings:
Ci-joint vous trouverez les suivants dessins:

- [ ] Preliminari / Preliminary / Préliminaire
- [ ] Per la costruzione / Released for construction / Pour la construction
- [ ] PregandoVi di ritornarceli con i Vostri commenti o approvazione / To be returned with your comments or approval / Nous vous prions de nous les renvoyer avec vos commentaires ou approbation
- [ ] Per offerta / For offer / Pour offre
- [ ] Perchè prendiate nota delle revisioni indicate / To note revision as indicated / Prenez note des révisions indiquées
- [ ] Per il Vostro archivio / For your file / Pour votre archives
- [x] For information

N.° di Copie / N.° of prints / N.° de Copies		N.° disegno / Dwg. N.° / N.° dessin	Modifica / Mod. / Révision	Denominazione / Title / Denomination	Note / Remarks / Remarques
3	✓	1171.50.008		TANKS AREA ZONE "E" FOUNDATION PLANT	
3	✓	1171.50.007		TANKS AREA ZONE "C" FOUNDATION PLANT	
3	✓	1171.30.110		NEUTRALIZED PASTE TANK	
3		1171.30.085		OLEUM STORAGE TANK	
3	✓	1171.10.008	4	STS AND ALKANOLAMIDES PRODUCTION PLANT	
		sheet 1 of 2		P&I DIAGRAM	
3	✓	1171.10.008	3	P&I DIAGRAM	
		sheet 2 of 2			
3				COMMENTS OF THE SCHEMES OF STS & ALKANOLAMIDE PLANT	
		sheets 2			
3		1171.10.012	1	COOLING WATER SYSTEM	
3	✓	1171.10.013		STEAM PRODUCTION	
3		1171.10.014	1	P&I DIAGRAM SECTION 01	
3		1171.20.004	1	GENERAL LAYOUT	
3		1171.20.008		PLOT PLANT	
3		007	1	— — ZONE "B"	

— Si prega di restituire al più presto possibile copia del presente modulo, timbrata, datata e firmata per ricevuta.
— Please return the copy of this form signed and dated for acknowledgement as soon as possible.
— Nous vous prions de nous renvoyer au plus tôt possible copie de cette formule timbrée, datée et signée pour réception.

NOTE:
REMARKS:

1000 - 3.84 - FERRARI MILANO

Customer: JORDAN SULPHOCHEMICALS CO.

Project: 1171

Job: 1552

COMMENTS ON THE SCHEMES OF STS & ALKANOLAMIDE PLANT

Drawing 1171.10.008 - sheets 1 & 2

In the final project of the STS & Alkanolamide Plant some modifications have been carried out in order to improve the process, to make it more flexible especially the drying section and product finishing.
The scheme of the reaction section is substantially according to the preliminary scheme of the offer.

We have modified the STS drying equipment, choosing the spray-drier instead of the film evaporator because the evaporator is mechanically more complicate, more sensitive to the formation of scales that can reduce drastically its efficiency, and less flexible as production capacity.

Our experience developed in manufacturing powder detergent plants using the spray-driers is the best guarantee about the solution chosen also for STS plant.

./..

The STS solution is fed into the tower by means of a proportioning pump 21P1 and sprayed through a special nozzle; the mist of STS in solution meets a flow of hot air in co-current, that was preheated in the furnace 21H1.
During the time of stay in tower, drying is performed. Therefore STS powder gets at the tower bottom, and then it is sucked by the fan 21K3.
The powder is collected in the silo 21V8, then by a screw feeder it is conveyed to the bag-filling machine 21W3.

As regards Alkanolamide we have kept the belt to produce flakes. However we have reduced to the minimum required the storage before the bag-filling machine, because this product is sensitive to heat.
The combined effect of the pressure that can be at the bottom of a big silo and of the ambient temperature (35°-40°C) may cause the formation of lumps not extractable from the silo, however not handled at the bag-filling machine.
The heating of the drying air in the furnace 21H1 is obtained by combustion of gasoil, but not heavy fuel as it is foreseen for the steam boiler.
The reason is because it is necessary to prevent any formation of fumes which would pollute the product.
To this purpose we have already provided a 30 m^3 tank for gasoil in the same area as that for heavy fuel.
The burner will be supplied for 250000 Cal/h.
The maximum estimated consumption is 20 kg/h of gasoil.

****

GR/gg/cf.

Product
Bulletin

NALCO

WT-326

Microorganism Control Chemical

PRODUCT BENEFITS
- Effective slime and algae control- works in hard-to-control systems.
- Penetrating dispersing formulation - penetrates and removes slime deposits.

PRINCIPAL USES

NALCO WT-326 effectively controls slime and algae and associated deposits in industrial recirculating cooling water towers. It is also effective against anaerobic bacteria that can produce serious corrosion in cooling water systems. NALCO WT-326 is a non-oxidizing biocide that has exceptional penetrating and dispersing characteristics.

NOTE: NALCO WT-326 is intended for industrial use only. Do not apply to potable water of domestic water systems.

DESCRIPTION

NALCO WT-326 is a water soluble, low cationicity biocide. It is unique in that it does not interfere with anionic dispersants.
NALCO WT-326 is biodegradable and does not contain heavy metals.

Color.....colorless
Density at 20 °C.....0.97-0.98 g/cc (spec)
Viscosity at 20° C.....10 mPas
pH as such.....7.2
Flash point.....33° C
Freeze point.....-7° C

FEEDING

For microorganism control in industrial recirculating cooling water towers, add NALCO WT-326 to the recirculating pump suction or any other point where uniform mixing will occur.
Metering pumps and pipe lines must be made in polyethylene, PVC, hypelon, viton, teflon, polypropilene, plexiglas.
NALCO WT-326 can be diluted with water in any ratio. Before dilution the compatibility of the product with the dilution water must be ascertained. If it does not form a precipitation, dilution can be made.
The product must be fed in pressurized lines.

Physical data reported for this product are not to be considered as quality control specifications unless indicated.

Cont'd

NALCO
NALCO ITALIANA S.p.A.
VIALE DELL'ESPERANTO, 71 - 00144 ROMA
TEL. (06) 55471 - TELEX 610663 NALCO I

NALCO

[redacted]

NALCO ITALIANA S.p.A.
ISO 9001 Quality Certified Company for products and services

PRODUCT BULLETIN

NALCO BWT-5127 N.I.

Specific Multifunctional Treatment for Low Pressure Boilers

- NALCO BWT-5127-N.I. is a liquid product for the treatment of low pressure boilers.
- NALCO BWT-5127-N.I. is an original formulation of organic anti-scale agents (Patented) together with specific oxygen scavengers and antifoams.

PRINCIPAL USES

NALCO BWT-5127-N.I. assures a high standard of cleanliness on heat exchanging on surfaces, a complete corrosion inhibiting action in the boiler and avoids carryover of boiler water into the steam.

TYPICAL DATA

Color	none (spec)
Odor	none
Form	liquid
Specific weight at 20°C	1.08-1.09 (spec)
Viscosity at 20° C	4.0 mPas
pH as such	5.5
Flash point	> 65° C

FEEDING

NALCO BWT-5127-N.I. should be fed continuously, preferably as such, directly from the drum to the boiler feedline.

HANDLING

Avoid contact with eyes and skin. Do not swallow.

DOSAGE

Dosage of BWT-5127-N.I. depends on the hardness of the feedwater. It is normally between 20 and 100 ppm.

CONTROLS

In addition to the usual controls recommended by the boiler manufacturer, the level of NALCO-BWT-5127-N.I. present in the boiler water can be analized through the NALCO BWT CONTROL TEST KIT available through Nalco Italiana.

SHIPPING

BWT-5127-N.I. is normally shipped in non returnable plastic drums containing 50 kgs net.

STORAGE

Properly stored in the original drums the product has a shelf life of more than one year.

EXP.MKT. 05.92 (Pac-WOB)

Physical data reported are not to be considered as quality control specifications unless indicated.

NALCO

NALCO ITALIANA S.p.A.
VIALE DELL'ESPERANTO, 71 - 00144 ROMA
TEL. (39) 6 54297.1 - TELEX 610663 NALCO I
FAX (39) 6 54297300

Product Bulletin

NALCO TRI-ACT 1820

CONDENSATE CORROSION INHIBITOR

PRODUCT BENEFITS

- Provides effective neutralization of acid-forming gases, such as CO_2, in initial, middle, and extended areas of a complex condensate system.
- Effectively reduces condensate system maintenance costs and minimizes the potential for boiler tube failures caused by metallic corrosion products in the returned condensate.

PRINCIPAL USES

TRI-ACT 1820 is an FDA-acceptable condensate corrosion inhibitor designed for use in steam and condensate systems. The product may be used at steam pressure up to 160 Bar.

GENERAL DESCRIPTION

TRI-ACT 1820 is an aqueous blend of neutralizing amines.

Color..from colorless to light yellow (spec)
Odor.....amine
Density at 20° C.....0.97-0.99 g/cc (spec)
Viscosity at 20° C.....5 mPas
pH (as such) .....12.0-13.0 (spec)
Freeze point.....- 2 °C
Flash point.....55° C

HANDLING

Danger: Corrosive to eyes and skin. Do not get in eyes, on skin, or on clothing. Wear goggles, face shield and rubber gloves when handling. Avoid breathing vapor. Use with adequate ventilation. Do not take internally. Keep away from heat, sparks, and open flames. Keep container closed when not in use. In case of contact, immediately flush with water for 15 minutes and get medical attention. Remove contaminated clothing and wash before re-use. Keep out of reach of children.

STORAGE

The product has a suggested in-plant storage limit of 2 years. Bulk tanks should be of polyethylene or stainless steel construction.

Exp.Mkt-05.92 Pac-2F, WOB
Replaces Ed. 10.91

Cont'd

Physical data reported for this product are not to be considered as quality control specifications unless indicated

NALCO ITALIANA S.p.A.
VIALE DELL'ESPERANTO, 71 - 00144 ROMA

Product Bulletin

NALCO

NALCO D-4660

PRODUCT BENEFITS

- NALCO D-4660 is effective in preventing all types of scaling salts deposition and in controlling corrosion.
- NALCO D-4660 is resistant to time, temperature, chlorine and pH fluctuations.

PRINCIPAL USES

NALCO D-4660 is a multifunctional stabilizer for industrial cooling waters formulated with polymer-type dispersant agents, scale inhibitors and corrosion inhibitors. By controlling salts deposition, NALCO D-4660 maintains the designed water flows and the proper heat transfer co-efficients in the heat exchangers.

TYPICAL DATA

Appearance	pale liquid
Specific gravity (20°)	1.050
Viscosity (20°C)	3 cps
pH	2.8
Freeze Point	-3
Flash Point	none

FEEDING

NALCO D-4660 can be fed neat directly from the drum, or can be water diluted at dilutions up to 20%.

Stainless steel or equivalent corrosion-resistant equipment should be used in pumping NALCO D-4660 as neat product.

HANDLING

No special precautions are necessary. Avoid prolonged contact with skin and clothing. In case of contact, flush with plenty of water. Do not take internally. This product is intended for industrial application only.

DOSAGE

Depends upon the severity of the problem. Nalco representative will help select the proper dosage.

SHIPPING

NALCO D-4660 is shipped in non-returnable polyethylene drums of 210 kgs net. Recommended in-plant storage time is two years at room temperature.

Product Bulletin

NALCO

WT-326

Microorganism Control Chemical

PRODUCT BENEFITS

- Effective slime and algae control- works in hard-to-control systems.
- Penetrating dispersing formulation - penetrates and removes slime deposits.

PRINCIPAL USES

NALCO WT-326 effectively controls slime and algae and associated deposits in industrial recirculating cooling water towers. It is also effective against anaerobic bacteria that can produce serious corrosion in cooling water systems. NALCO WT-326 is a non-oxidizing biocide that has exceptional penetrating and dispersing characteristics.

NOTE: NALCO WT-326 is intended for industrial use only. Do not apply to potable water of domestic water systems.

DESCRIPTION

NALCO WT-326 is a water soluble, low cationicity biocide. It is unique in that it does not interfere with anionic dispersants.
NALCO WT-326 is biodegradable and does not contain heavy metals.

Color.....colorless
Density at 20 °C.....0.97-0.98 g/cc (spec)
Viscosity at 20° C.....10 mPas
pH as such.....7.2
Flash point.....33° C
Freeze point.....-7° C

FEEDING

For microorganism control in industrial recirculating cooling water towers, add NALCO WT-326 to the recirculating pump suction or any other point where uniform mixing will occur.
Metering pumps and pipe lines must be made in polyethylene, PVC, hypelon, viton, teflon, polypropilene, plexiglas.
NALCO WT-326 can be diluted with water in any ratio. Before dilution the compatibility of the product with the dilution water must be ascertained. If it does not form a precipitation, dilution can be made.
The product must be fed in pressurized lines.

Physical data reported for this product

'00341

BEST AVAILABLE COPY

ATT : MR M. SBEIH

OUR REF : 1/5/341 DT 28/8/92

YR REF : YR OFFER DT 19/8/92

SUB : SUPPLY OF SUBMERSIBLE PUMP.

RE ABV SUB, REGRET TO INFORM YOU THAT OFFER PUMP IS NOT SUITABLE FOR INSTALLATION IN OUR FACTORY DUE TO TECHNICAL REASONS . HOWEVER YOU'RE REQUESTED TO QUOTE FOR A NEW ONE AS FOLLOWS:-

1- SUPPLY : SUPPLY OF TWO COMPLETE SUBMERSIBLE PUMPS AND TWO SEPERATE MOTORS AS SPARES.

2- CAPACITY : 20 M3/HR MIN AT 400M HEAD .

3- PUMP PARTS : TO BE SUITABLE FOR HIGH T.D.S AND ACIDIC HOT WATER .

4- MOTORS : ELECTRICAL SUBMERSIBLE MOTOR OF AROUND 45 K.WT, 866 VOLTS , 3 PH 50 CY. WORKABLE IN HOT WATER, OR WITH HEAT EXCHANGER OF AROUND 0.37 M2.

5- PRICE : PRICE TO READ C+F OUR FACTORY.

6- DELIVERY : PLS INDICATE SHORTEST PERIOD FOR DELIVERY.

7- VALIDITY : OFFER TO BE VALID FOR 1 MONTH.

8- PAYMENT : PLS INDICATE PAYMENT TERMS.

9- WATER QUALITY:

- TURBIDITY (NTV) : 41.4
- COLOUR-HAZEN : LESS THAR 5.
- CONDUCTIVITY : 2600 AT 25 DEG. CENT.
- PH : 6.5
- TOTAL ALKALINITY: 268 PPM.
- FREE CARBON DIOXIDE: 20 PPM.
- BICARBONATE : 268 PPM.
- SULPHATE : 443 PPM.
- CHLORIDE : 656 PPM.
- NITRATE : 1 PPM.
- SILICA : 13 PPM.
- CALCIUM : 444 PPM.
- MAGNESIUM : 264 PPM.
- SODIUM : 605 PPM.
- POTASSIUM : 51 PPM.
- IRON - TOTAL FE : 10 PPM.
- IRON IN SOLUTION : LESS 0.05 PPM.
- MANGANESE : 0.1 PPM.
- FREE AMMONIA : 0.04 PPM.
- PERMANGANATE VALUE:
  OPTICAL MEASUREMENT O2 = 0.11 PPM.
- TOTAL HARDNESS : 708 PPM.
- HARDNESS ALKALINE : 268 PPM.
- HARDNESS NON ALKALINE : 440 PPM.

PLS NOTE THAT LOW VALUE OF PH IS DUE TO [illegible] GAS [illegible] IN THE WATER.

10- WARRANTY : PLS INDICATE WARRANTY PER[illegible] [illegible] TAKE INTO CONSIDERATION THAT [illegible] WITH WATER SPECIFICATION [illegible]

بسم الله الرحمن الرحيم

Index

JORDAN SULPHOCHEMECAL COMPANY
ZERKA-JORDAN

DATE: 30 /3 /1992

TIME	PRESSURE PSI REJECT	PRODUCT	FILTER IN	P.INLET	FLOW RATE M3/HR RECIRC.	PRODUCT	REJECT	T.D.S PPM 1-st MEM.	2-nd MEM.	TEST RESULTS S.D.I	CLORINE	SILICA	IRON
0800	120	58	43	43	9.0	6.0	1.5	—	—	—	zero	—	zero
1000	120	58	43	43	9.0	6.0	1.5	—	—	—	—	—	—
1200	120	58	43	43	9.0	6.0	1.5	—	—	—	—	—	—
1400	120	58	43	43	9.0	6.0	1.5	—	—	—	zero	—	zero
1600	125	62	45	44	10	6.5	1.5	/	/	/	zero	/	zero
1800	124	61	45	44	10	6.5	1.5	/	/	/	zero	/	zero
2000	125	61	44	44	10	6.5	1.5	/	/	/	zero	/	zero
2200	125	62	45	44	10	6.5	1.5	/	/	/	zero	/	zero
2400													
2000													
4000													
6000													

TOTAL PRODUCTION : M3 TOTAL PRODUCTION : M3 TOTAL PRODUCTION : M3

الوردية الأولى :

- تشغيل الوحدة وضخ الماء المعالج الى خزانة الخدمات .
- إضافة ½ جالون من الحامض وبيل من الكلورين
- عمل الفحوصات اللازمة لمياه الوحدة وكانت النتيجة جيدة .
- حالة البئر تعمل على ال Auto .
- خلال الوردية تم عمل Regeneration ال السوفتنر ومراقبة البويلر مع عمل Drains .
- خزانة الماء المنتج محلول بالكامل .
- خزانات الترسيب شبه محلولة .

الوردية الثانية :

* استلام الوحدة في وضع تشغيل ومتابعة الضخ الى خزانات الخدمات
* تم عمل غسيل للفلاتر في بداية الوردية ومن ثم متابعة التشغيل .
* عمل الفحوصات اللازمة لمياه الوحدة وتدوين نتائجها في الجدول اعلاه .
* كانت عملية السحب خلال الوردية من ال degasser ال ال filter tank
* ما زالت حالة البئر تعمل على وضع Auto خلال الوردية .

الوردية الثالثة :

ممتاز

OPERATER :
ENGINEER :

OPERATER :
ENGINEER :

OPERATER :
ENGINEER :

BEST AVAILABLE COPY