PN-ABY-033
ISN: 98410

The Hashemite Kingdom of Jordan

Ministry of Water and Irrigation

Water Quality Improvement and Conservation Project

Industrial Audit: Background Material

Refinery Industry

Harza Environmental Services, Inc.

Development Alternatives, Inc.

USAID

The Technical Assistance Team Includes:

Development Alternatives, Inc.
Science Applications International Corp.
Harza Environmental Services, Inc.
Development Associates, Inc.

United States Agency for International Development
Contract No. 278-0288-00-C-4026-00

December 1994

BACKGROUND MATERIAL REPORT

REFINERY INDUSTRY

Submitted to:

United States Agency
for International Development
Amman Chamber of Industry, Jordan
Ministry of Water and Irrigation, Jordan

Submitted by:

Development Alternatives, Inc.

Prepared by:

Harza Consulting Engineers and Scientists
Chicago, Illinois, USA

PREFACE/ACKNOWLEDGMENTS

This report presents the background materials for Petroleum Refinery Industry prepared with emphasis on the pollution prevention/waste minimization (PP/WM) and water conservation practices for this industry. The report was prepared by Dr. Jeffrey T. Cline of Harza Consulting Engineers and Scientists (Harza), Chicago, Illinois, under subcontract with Development Alternatives, Inc. (DAI), Washington, D.C.

Efforts for preparation of this report was directed by Dr. Shawn R. Niaki, P.E., Pollution Prevention Program Director, of Harza; coordination with Dr. Usama Mudallal, Environmental Director, of the Amman Chamber of Industry (Chamber); and the member of the PP/WM Committee from the Ministry of Water and Irrigation (MWI) staff, Eng. Rania Khaleq, and the Water Autority of Jordan (WAJ) staff including Eng. Abdul Wahab Matar, Eng. Marwan Al-Tal, Eng. Nabeel Hejazeen, and Eng. Mohamad Lafi.

Special appreciation is given to Dr. Mohammed Bani Hani, Secretary General of MWI; Eng. Qusai Qushad, Seretary General of WAJ; Mr. Khaldun Abuhassan, Chairman of the Chamber; Mr. Walid Al-Khatib, Director Genaral of the Chamber; Dr. Muwaffaq Saqqar, Project Coordinator; and to DAI, as represented by Edwin D. Stains, Chief of Party; for their cooperation and confidence.

PETROLEUM REFINERY INDUSTRY
BACKGROUND MATERIALS

INDUSTRIAL WASTEWATER DISCHARGE PREVENTION PROGRAM
WATER QUALITY IMPROVEMENT AND CONSERVATION PROJECT

Amman, Jordan

TABLE OF CONTENTS

1.0 INTRODUCTION 1
1.1 Background 1
1.2 Objectives 1

2.0 INDUSTRIAL OVERVIEW 3
2.1 Typical Processes 3
2.1.1 Petroleum Management Processes 3
2.1.2 Refining Processes 3
2.1.3 Facility Support Processes 6
2.2 Wastewater and Other Discharges/Emissions 6
2.2.1 Wastewaters 6
2.2.2 Solid Wastes and Sludges 9
2.2.3 Air Emissions 9
2.3 State-of-Art Waste Controls in Oil Refining 10
2.3.1 Water Pollution Controls 10
2.3.2. Air Pollution Controls 12
2.3.3 Solid Waste Pollution Controls 12
2.4 Conservation 13

3.0 THE PETROLEUM REFINERY INDUSTRY IN JORDAN 15
3.1 The Refinery Environment and Processes 15
3.2 Refinery Waste Discharges and Recycling 15
3.2.1 Water Discharges 16
3.2.2 Sludge Generation and Treatment 17
3.2.3 Air Emissions 17

4.0 AREAS FOR POTENTIAL IMPROVEMENT 19
4.1 Water Conservation 19
4.2 Pollution Prevention/Waste Minimization 20
4.2.1 Wastewater PP/WM Techniques 20
4.2.2 Solid Waste and Sludge PP/WM Techniques 23
4.2.3 Air Emissions PP/WM Techniques 25
4.2.4 General PP/WM Techniques 25
4.3 Conclusions 26

5.0 SUMMARY 28

6.0 REFERENCES 29

LIST OF ABBREVIATIONS

Organization and Programs

DAI - Development Alternatives Inc.
USAID - United State Agency for International Development
PP/WM - Pollution Prevention/Waste Minimization
API - American Petroleum Institute

Refinery Processes

LPG - Liquid Petroleum Gas
FCC - Fluid Catalytic Cracking
DAF - Dissolved Air Flotation (Treatment Method for Wastewater)

LIST OF TABLES

TABLE 1: SOURCES OF REFINERY AIR POLLUTANTS

TABLE 2: TYPICAL REFINERY SOLID WASTES WITH DESCRIPTIONS

TABLE 3: JORDAN PETROLEUM REFINERY PRODUCTION

TABLE 4: WATER ANALYSES FROM THE IRRIGATION POND OUTLET

TABLE 5: SOLID WASTE MANAGEMENT TECHNIQUES FOR REFINERY WASTES

TABLE 6: IMPACT OF MAKEUP TREATMENT ON COOLING TOWER BLOWDOWN

LIST OF FIGURES

FIGURE 1: THE FIVE MAJOR REFINERY UNITS

FIGURE 2: BLOCK FLOW DIAGRAM FOR JORDAN REFINERY PROCESS

FIGURE 3: MAIN WATER AND WASTEWATER FLOWS AT THE JORDAN REFINERY

1.0 INTRODUCTION

This document presents the materials collected as background information for a pollution prevention, waste minimization and water conservation audit of the Jordan Petroleum Refinery Company, Ltd. (JPRC).

1.1 Background

Development Alternatives, Inc. (DAI) under a contract with the United States Agency for International Development (USAID) is performing an Industrial Wastewater Discharge Prevention Program (IWDPP) in Amman, Jordan. The IWDPP is one of the four components of the Water Quality Improvement and Conservation project, funded by the USAID. The IWDPP is being performed by DAI with full coordination between the Ministry of Water and Irrigation and the Amman Chamber of Industry. The IWDPP includes conducting audits, performing feasibility studies, and designing for demonstration activities at selected industrial facilities.

Pollution prevention and waste minimization (PP/WM) techniques are defined as any techniques to prevent or reduce waste generation by source reduction or recycling activities. These activities must reduce either the volumes or the concentrations of pollutants generated prior to treatment, storage or disposal of the waste.

Based on a ranking methodology, the PP/WM Committee has selected ten industries with potential needs for PP/WM audits. One of these industries is the "refinery industry." Harza Consulting Engineers and Scientists (Harza), Chicago/USA, has been retained by DAI to lead the PP/WM audit for this industry.

The purpose of these audits is to assist the industries in the Amman-Zarqa Basin to assess pollution problems and the alternative solutions to achieve desired levels of pollution prevention, water conservation, and wastewater treatment under the following subtasks:

- Subtask 1.1 - Audit Coordination;
- Subtask 1.2 - PP/WM Background Materials Preparation;
- Subtask 1.3 - Pre-Investigation Meeting;
- Subtask 1.4 - Audit;
- Subtask 1.5 - Post-Inspection Meeting; and
- Subtask 1.6 - Audit Evaluation Report.

1.2 Objectives

In this document, background information has been assembled by performing a comprehensive literature review. The purpose of the literature review was to identify the available techniques and clean technologies being practiced for water conservation and PP/WM for the petroleum refinery industry. The literature review included PP/WM related articles, industry journal articles and conference proceedings, and books on pollution types and controls. In addition to the literature review, in-house technical expertise contributed to the content of this report.

Section 2.0 of this report provides an overview of the petroleum refinery industry, including a description of the typical wastewater, air emissions and solid wastes generated by the industry. Emphasis is on wastewater. Section 3.0 describes the Jordan Petroleum Refinery. Section 4.0 describes areas for potential improvement in water conservation, pollution prevention and waste minimization. Water pollution prevention is emphasized. Finally, section 5.0 lists the main references consulted during the literature search. Copies of the appropriate sections of these references are provided under a separate cover.

2.0 INDUSTRIAL OVERVIEW

2.1 Typical Processes

The following sub-sections describe the major processes of a typical petroleum refinery: petroleum management, petroleum refining, and facility support services. The petroleum management process includes the handling of petroleum as crude oil raw material, finished products, and waste. The refining processes convert crude oil into salable products. Facility support processes include maintenance activities for the refinery's physical plant and sanitary and laboratory wastewater treatment.

2.1.1 Petroleum Management Processes

A large proportion of a refinery's area is devoted to petroleum storage and handling facilities, for both raw materials and finished products. This storage is usually on a tank farm having dikes and drainage control for rainwater runoff as well as petroleum spills, including tank rupture.

The area allocated to crude oil storage may be minimal if the refinery is connected directly to oil fields by a pipeline. However, if crude oil is imported, such as in Jordan, significant tankage area must be provided to allow continuous refinery operation, given irregular crude deliveries (tank trucks, tankers).

Since a variety of fractions are refined from crude oil, finished petroleum products require even more storage capacity than the raw material. Nonvolatile products, such as diesel and fuel oil, are typically stored in large-diameter cylindrical tanks with low-pitched conical roofs. Tanks holding volatile products, such as gasolines, employ floating roofs to reduce evaporation losses and fire hazards. Liquid petroleum gas is typically stored in pressure vessels or refrigerated pressure tanks, but is sometimes stored in underground geological formations, such as salt domes.

2.1.2 Refining Processes

The purpose of petroleum refining is to separate crude oil into more useful products. The refining processes are complex and can vary greatly among facilities depending on the grade of crude oil being refined, the products being marketed, and the physical environment. In general, however, petroleum manufacturing can be divided into three categories, listed here in the order of the most basic to most specialized: physical processes, chemical processes, and purification processes. The operations typically included in each of these processes are described briefly below and schematicized in Figure 1: "Typical Refinery Processes."

Physical Processes: Desalting is a preliminary refining process required for crude oil. This process removes the salt from crude oil by washing the oil with water, which is later sent to an oil-water separator. If an emulsion is formed during this process, then it is sent to an emulsion breaking facility such as a belt filter.

The primary refining process is fractional, or atmospheric distillation. This process separates crude oil into products having different boiling points. The crude oil is heated at atmospheric pressure to temperatures of about 600° to 750 degree Fahrenheit (°F), depending on the nature of the crude oil and the desired products. The crude oil is then cooled and its fractions are separated by condensation in accordance with their boiling points. The products of atmospheric distillation are typically light and heavy naphtha, kerosene, light and heavy oil, asphalt, and coke. Non-condensed gases pass through the top of the distillation unit.

Vacuum distillation is often performed subsequent to atmospheric distillation to separate less volatile components without raising the temperature to levels that would decompose the crude oil. The process is essentially the same as that of atmospheric distillation, but at a much reduced pressure. The vacuum pressure allows volatiles to be processed without increasing the temperature above approximately 750°F. Products typically formed during this process are light and heavy gas oil, wax products, and asphalt.

Absorption and stripping are processes used to obtain valuable light products, such as propane and butane, from the gasoline vapors that pass through the top of distillation units. During the absorption process gasoline vapors are bubbled through an oil. The light products dissolve in the oil, while dry gases such as hydrogen, methane, ethane, and ethylene pass through undissolved. The light products are then stripped from the absorption oil by water-cooled condensation. The unvaporized oil passes from the base of the column for reuse.

The adsorption process is used to separate undesirable constituents of petroleum products onto highly porous, solid materials that have the ability to select and adsorb specific types of molecules. For example, adsorptive "molecular sieves" are used to remove normal paraffins from gasoline fuel, thus increasing the fuel's octane number. Similarly, the process of crystallization is used to separate wax from lubricating oil fractions to make the oil suitable for use. In this process a solvent is added to the oil and the solution chilled. The solvent serves to maintain the oil's fluidity at low temperatures. The wax is then separated from the oil by passing the solution through a canvas cloth: the wax is retained on the cloth. The solvents can then be distilled from the oil and reused.

Chemical Processes: Chemical processes can be used to change the molecular structure of less valuable petroleum products to those in greater demand. A very common chemical process, called cracking, thermally breaks, rearranges, or combines hydrocarbon molecules into different chain arrangements. The product derived from the cracking process is, in effect, a synthetic crude oil. Desired fractions must then be physically separated, as described previously.

There are three major cracking techniques: thermal cracking, catalytic or fluid catalytic cracking, and catalytic hydrocracking.

The thermal cracking process alters hydrocarbon molecules with heat and pressure. Different thermal cracking techniques are performed on different petroleum products: these techniques include steam cracking, fluid coking, and delayed coking. Catalytic cracking is similar to thermal cracking, but due to the use of a catalyst, catalytic cracking increases the yield of improved quality products under much less severe operating conditions than in thermal cracking. Fluid catalytic cracking is a common variation of the catalytic cracking process. In this process a finely divided solid catalyst is maintained as a simulated fluid by suspension in vapor. The resultant even distribution of catalyst stabilizes the reaction temperature. Catalytic hydrocracking differs from catalytic cracking in that it uses hydrogen and one or more catalysts, depending on product output, and can handle high sulfur feed stocks without prior desulfurization.

Molecular combining is performed by the processes: catalytic reforming, polymerization and alkylation. Catalytic reforming is a molecule recombining process, primarily used for the production of high-octane components. Another chemical process is polymerization. In this process the gaseous hydrocarbons produced in the cracking processes are converted into more valuable products, such as high octane gasoline. The hydrocarbon molecules are induced to combine, or polymerize, into larger, heavier molecules, forming a material that performs well as a motor fuel. Isomerization and alkylation, either sulfuric acid alkylation or hydrofluoric acid alkylation, are processes similar to polymerization.

Purification Processes: The purification process for products and process streams includes: sulfur removal, mercaptan sweetening, hydrogen sulfide removal, caustic treating, acid treating, clay treating, oxidation, desalting and crystallization. To best market petroleum products, certain impurities must be removed or made less obnoxious. The most common impurities are sulfur compounds. Most crude oils contain a small amount of hydrogen sulfide, which is concentrated during distillation. The bulk of the hydrogen sulfide passes off as vapor, but some remains dissolved in the distillation products. The dissolved amount is typically removed with alkaline solutions.

Cracking process products contain complex sulfur compounds that are not removed so readily as crude oil sulfur. The most common of these are mercaptans (which have a particularly obnoxious odor). Other common contaminants include oxygenated compounds, such as alkyl phenols, and nitrogen bases, gums, and unstable color-forming compounds.

One of the oldest forms of sulfur treatment is sulfuric acid treatment, which improves the color of cracked gasolines and inhibits the formation of gum during storage. Another older method of impurity and gum removal is clay treatment. In this process clay is typically added to the oil to adsorb impurities and is then filtered off and disposed. Since disposal of contaminated clay is often expensive, more modern processes, such as solvent extraction and hydrogen treatment, are replacing clay treatment and sulfuric acid treatment at many facilities.

Hydrogen treatment, or hydrotreatment, and catalytic hydrotreatment are used to remove impurities, such as nitrogen, oxygen, and sulfur, from petroleum products. Hydrotreatment processes are hydrofining and hydrodesulfurization. In them, hydrogen is mixed with oil and the hydrogen is vaporized before passing over a catalyst. The sulfur is converted to hydrogen sulfide, which is eliminated from the circulating hydrogen by absorption in a solution. The solution can be heated to remove the hydrogen sulfide and then reused. The recovered hydrogen sulfide can be used for manufacturing high purity elemental sulfur.

Mercaptans are typically removed through the sweetening processes. Sweetening converts mercaptans into relatively innocuous sulfides through catalyst assisted oxidation. If complete sulfur removal is necessary, however, more complicated treatment is required. One method is mercaptan extraction, whereby, chemicals are added to the petroleum to increase the water solubility of the mercaptans, thus causing them to be extracted.

2.1.3 Facility Support Processes

Present-day refineries contain extensive support processes to maintain refinery operations. These support processes include sanitary and laboratory water and wastewater treatment systems, maintenance and construction shops, and, in some cases, steam or electric power generation facilities.

2.2 Wastewater and Other Discharges/Emissions

The following sub-sections list the wastewaters, solid wastes, and air emissions generated at a typical refinery along with their primary sources and typical treatment or disposal methods. Figure 1 shows the predominant residuals and emissions of the five major refining units of a typical refinery today.

2.2.1 Wastewaters

The refinery wastewaters generated, along with other discharges, are only briefly described in the references and therefore the discussion is generalized.

Generation of Wastewater: The quantity and quality of wastewater varies depending on the quality of crude, the degree of its refining, the catalysts used and the marketable products. For a fuel-oil type of plant as in Jordan, the average quantity of contaminated wastewater/ton crude is about 1.15 m^3/t (range of 0.5 to 1.53). The major process sources for generation of wastewater are as follows:

- Steam Stripping;
- Cooling Towers;
- Atmospheric crude distillation units;
- Vacuum distillation units;
- Asphalt unit with contact cooling;

- Non-contact cooling;
- Alkylation and reforming units;
- Catalytic and hydrocracking units;
- Boiler blowdown;
- Ion-exchange and reverse osmosis regeneration water;
- Process cleaning and wash-downs; and
- Domestic (sewage and washing).

These wastewaters contain many contaminants such as; dispersed oil, dissolved oil, hydrogen sulfide (H_2S), mercaptans, ammonia, cyanides, high salinity, and fine solids (spent catalysts, clays from runoff), and "priority pollutants" such as; BTEX's (benzene, toluene, ethyl benzene and xylene), phenolics, surfactants and chemical additives. Another major source of wastewater is often caused by contamination of stormwater runoff with spilled oil, etc.

Liquid Waste Handling: There are four types of liquid wastes handled in refineries: oily water, clean water, sanitary and chemical.

An oily-water system is used to collect refinery wastes composed of water, oil, neutralized acids, and alkalies, and, convey them to treating facilities. Materials collected in this system are:

1) Oily water from process-unit vessels: exchangers, pumps, drains, gland cooling water, process washwater, oily blowdown, oily steam condensate, oily hot well outlets, once-through cooling water from oily barometric condensers, floor and paving drains in oily areas, and blowdown drum effluent.

2) Oily water from utility plants: oily steam condensate, pump, vessel, and exchanger drains, floor drains and paving drains in oily areas.

3) Streams that often are (but not necessarily) diverted to another system: process-unit neutralized acids and alkalies, cooling water, rainfall from oil-free areas, roof drainage, cooling-tower blowdown, chemical treating unit effluent, sanitary drains, septic tank effluent and neutralized chemical effluent.

Drainage from offsite areas, which is usually collected in the oily-water system, but could have special facilities includes: pump group drains, truck and rail loading area drainage and oily steam condensate.

One way that crude oil contaminates wastewater streams is by mixing with process water during refinery operations that involve direct water/oil contact, such as desalting. Another common way crude oil pollutes water is through spills and leaks which are washed down by maintenance operations or rainfall runoff to drains in the refinery or crude oil storage areas. Finally, leaks of crude often occur, directly into a water stream such as a cooling water.

Crude oil contaminated wastewater typically flows to an oil-water separator and then to the refinery's wastewater treatment system, as do all other refinery wastewaters. The oil-water separator is typically a pond or tank in which the oil rises to the surface and can then be skimmed off. If the pond or tank is uncovered, then some oil is evaporated off the water to the atmosphere before being skimmed.

A clean water system collects wastewater which has little or no contact with oil and, conveys it to a treating plant. This system includes open ditch drainage, once through cooling water, boiler blowdown, oil-free rainfall, cooling tower blowdown, neutralized acids and alkalies and steam condensate.

Sour water is one of the wastes in this category. Sour water is the term used to describe water contaminated with hydrogen sulfide. Sour water is produced in refinery operations including hydrotreating, catalytic cracking, and the condensation stage of distillation. Trace metals, ammonia, phenols, and other odorous hydrocarbons are also commonly present in sour water. This water is typically sent to a gas stripping tower prior to being discharged to the wastewater treatment system.

Another wastewater in this category is spent caustic wastewater. Spent caustic solutions may consume large quantities of water. This wastewater and others described above are candidates for PP/WM and water conservation in the assessment.

Cooling water is a high volume wastewater in this category. It usually makes up a high percentage of water usage in a refinery operation (about 50%). Cooling water is most commonly uncontaminated with hydrocarbons. But, when process leaks occur, the cooling water effluent can become contaminated. Some of the wastewaters may contain high suspended solids, high salinity and chemical additives such as algaecides and corrosion inhibitors. At some facilities, large volumes of cooling water are used once and discharged with process wastewaters. At many facilities though, the goal for cooling water usage is three passes. But, initial water chemistry and effluent treatment will dictate the pass-through number.

Sanitary sewer systems collect water from toilet facilities and convey these to a treating system or municipal sewer system.

Chemical wastes are generated from chemicals used in processing. Special treating facilities or disposal methods are used when these chemicals can cause a wastewater to have hazardous characteristics.

Treating Facilities for refinery wastes can be subdivided into three general categories:

1) Facilities directly related to petroleum processing such as H_2S stripping, mercaptan extraction and caustic neutralization.

2) Facilities for separation of nonemulsified oil and oil-bearing sludges from wastewater, include oil-water separators, effluent holding basins or lagoons, and

ballast water separators.

3) Special treating facilities to remove residual oil in all forms, to remove phenols and remaining sulfides, to remove all sediment, to satisfy biological oxygen demand (BED) and chemical oxygen demand (COD) and generally to improve odor, color and taste.

In summary, water treatment is usually very extensive in order that the water can be either recycled or made innocuous so that it can be discharged to the environment. Some water is deepwell injected if decontamination would be inhibitively expensive. Water is treated by settling ponds, skimmers, centrifuges, filters and biological treatment to usually remove oil and/or solids. If the water becomes unusable for any refinery use, yet it is dischargeable to the environment, it will be discharged to wetlands, forests (for further land treatment) or directly to water bodies such as rivers or oceans. In many countries this practice is strictly regulated in order to protect the environment.

2.2.2 Solid Wastes and Sludges

Significant refinery solid wastes include: spilled or leaked crude oil and resultant contaminated soils, oily sludge (such as storage tank bottoms and oil-water separator sludge), spent catalyst, and coke residues, sulfur solids and storage residues. Water treatment system chemical residue, wastewater treatment sludge, including that from process water, sanitary wastewater sludges, erosion and storm basin sediment, and maintenance and construction debris.

Refineries typically have containment systems to prevent spilled oil from entering the soil, and eventually the groundwater. Surface containment techniques include containment dikes, concrete paving, a clay or bitumen layer, or plastic sheets in the storage areas to render the soil impermeable. Subsurface containment techniques include trenching and slurry walls.

Also, many refineries try to prevent petroleum spills and leaks into soil by inhibiting corrosion of underground steel storage tanks and piping. Two practical methods for preventing metal corrosion are preventing direct contact between the metal and the soil (i.e. by using protective coatings) or using cathodic protection to reduce corrosion reactions.

The methods refineries typically employ for the ultimate management of solid wastes include incineration, landfilling, chemical fixation, and land treatment. Incineration and landfilling are practiced basically as they are for all other industries. Chemical fixation is used for liquid wastes; prevalent techniques employ coagulants to form insoluble precipitate, and reagents, such as portland cement, for sorption. Land treatment systems depend on microorganisms in soil to aerobically break down oil into carbon dioxide and water while minimizing the release of dust and volatiles and the percolation of water soluble contaminants through the soil.

2.2.3 Air Emissions

The most significant refinery air pollutants are sulfur oxides (SO_x), nitrogen oxides (NO_x), carbon monoxide (CO), particulates, and volatile organic carbons (VOCs).

SO_x, NO_x, CO, VOC's and particulates are emitted primarily from process and utility furnaces, from fluid catalytic crackers, and from catalytic reforming processes. Particulate matter is also emitted from catalyst handling, including regeneration, from coke and sulfur handling and storage, and from maintenance and construction debris.

Since the amount of SO_x emitted depends largely on the amount of sulfur in the crude oil, the easiest method of SO_x emission reduction is to use low-sulfur crude oil when available. Other standard SO_x emission reduction techniques have been described as refining processes in Section 2.1.2 of this report.

To reduce NO_x and CO emissions, the most direct method typically employed at refineries is to reduce the amount of NO_x and CO formed. NO_x and CO form in boilers during fuel combustion as a function of combustion time, temperature, pressure, and excess oxygen conditions. Combustion modification techniques for NO_x and CO reduction include low-excess-air combustion, stage combustion, and catalytic combustion.

Particulates are typically controlled by the use of wet scrubbers, mechanical collectors, electrostatic precipitators, and controlled combustion.

The majority of VOCs are generated from physical separation refining processes, particularly the more complex processes such as absorption and stripping. Additionally, VOCs are generated from cracking operations, from evaporative oil-water separators, and from poorly maintained storage and handling facility equipment, such as pipe, valves and storage tank vents.

VOC emissions are typically controlled by the use of double seals on the floating roofs of storage tanks to permit very little escape of VOCs, the use of floating or fixed roofs on oil-water separators to reduce oil evaporation, and installation of a VOC absorption, scrubber, or incinerator system on the vents of physical separation refining processes.

2.3 State-of-the-Art Waste Controls in Oil Refining

The state-of-the-art technologies and methods for water conservation, wastewater control, and solids disposal will be presented below for potential application in the Jordan refinery.

In the United States (US), state-of-the-art waste controls are being installed to meet Best Available Technology regulations for water discharges, solid wastes and especially air emissions. Therefore, the US refinery waste control systems for water pollution, air emissions, and solid waste pollution will be discussed below, but with emphasis on water pollution. The high costs to pollute or dispose of hazardous refinery wastes has driven the industry in the US to initiate programs to prevent pollution by waste minimization, recycling and/or conservation.

The US refinery generated hazardous wastes are generally: A) detoxified by land farming and chemical treatment, B) recycled to use in another process or product, C) disposed by deep-well injection or, D) disposed in controlled land fills. In a typical US refinery, the greatest weight of disposed refinery wastes often are deep-well injected liquids.

About 60% of the refinery wastes by weight are dilute aqueous residuals. In most refineries there is an ongoing engineering program to minimize these aqueous waste volumes by regeneration, recycling or reuse in a downstream process. This will be discussed in the sections on waste minimization and water conservation.

2.3.1 Water Pollution Controls

In this section the controls for minimizing potential wastewater and groundwater pollution will be presented.

Wastewater Treatment: The two major units employed in the purification of refinery wastewaters are the sour water stripping unit and the wastewater treatment plant. The sour water stripping unit is used for pretreatment of water containing hydrogen sulfide, and permitting reuse of the stripped wastewater. The wastewater treatment unit is the final treatment for all contaminated water prior to discharge.

Refinery operations produce sour water (H_2S) from processes such as hydrotreating, catalytic cracking, coking and wherever steam is condensed in the presence of gases containing hydrogen sulfide. Sour water often also contains ammonia, phenols and other odorous hydrocarbons, and all necessitating treatment. Most stripping methods involve the downward flow of sour water through a trayed or packed tower while an ascending flow of stripping steam or gas removes the contaminants.

Wastewater treatment units upgrade the quality of effluent water so that it can be safely returned to the environment or recirculated in the refinery. The final effluent from the refinery comes from several sources: process water, cooling water, ballast water and stormwater. The types of treatment equipment are classified as physical, biological, chemical and physical/chemical. Physical techniques for removing suspended materials include air flotation devices, grit chambers, clarifiers, granular media filters, centrifuges and oil separators. Biological processes treat the biologically degradable fraction of the wastewater using trickling filters, activated sludge, aerated lagoons, oxidation ponds and rotating biological contactors. Chemical/physical techniques rely on chemical or catalytic reactions to remove contaminants. Some refineries use granular media filters and activated carbon in a final polishing step.

Control of Spills: Oil spills ultimately result in contaminated surface or groundwater if not eliminated or controlled. Spill prevention and minimization programs are ongoing at many refineries. Methods to prevent spilled product from entering the ground (groundwater) include: construction of containment dikes; rendering the soil impermeable by concrete paving, a clay layer, bitumen layer, plastic sheets covered with gravel, fiberglass-reinforced epoxy, and surface drain systems which carry all oil to a dirty water

sewer for treatment. Subsurface techniques for oil mobility control include: trenching, slurry walls and, hydrodynamic protection.

Stormwater Controls: Techniques commonly employed in refineries for stormwater control are designed to keep oil and water plus solids separate, yet be treatable if necessary. Concrete paving, storm sewers and other structures designed for this purpose are placed throughout a refinery, and, are often designed for the worst-case storm anticipated. Some refineries build underground or above ground treatment systems to remove any oil contamination. After treatment, the water is pumped to facilities for refinery process uses.

Corrosion Controls: The majority of petroleum spills which have reached groundwater resulted from corrosion of buried steel tanks and piping. Some typical methods for preventing corrosion of buried metal are: A) preventing direct contact between the metal and the soil by using protective coatings, B) by cathodic protection, thus reducing corrosion reactions, and, C) installing non-metal piping when low pressures permit.

2.3.2. Air Pollution Controls

Discussion of these technologies will be limited since the major concern of this treatise is water. Air emissions vary significantly both in quantity and type among refineries. Refinery emissions are affected by crude oil feedstocks, process equipment, control measures and maintenance practices. Generally, air pollution control systems are associated with specific process units and are designed to remove specific contaminants. In Table 1, the sources of refinery air pollution are listed for hydrocarbons, gaseous sulfur compounds, nitrogen oxides, particulate matter, odors and ammonia.

Sulfur Oxides: Sulfur oxides, one of the most common air pollutants, are most often produced when a sulfur containing fuel is burned. The major part of the SO_2 emissions in refineries today arises from the combustion of fuels to provide energy for the processes. The major sources of SO_2 emissions can be boilers, process heaters, catalytic cracking units, regenerators, treating units, H_2S flares, and coking operations. The amount of SO_2 depends on the sulfur contents of the fuels. The crude oil and finished product streams can be treated to remove sulfur compounds. The sulfur oxide emissions can be controlled by scrubbing the stack gases. Sulfur levels may be reduced by using hydrodesulfurization followed by sulfur recovery. In general the capital investment requirements to install stack gas scrubbing to control SO_x emissions is at least as great as the alternative of fuel sulfur reduction. Thus today, stack gas scrubbing is sparingly used.

Nitrogen Oxides: The major sources of NOx emissions are from combustion processes. The main factors in thermal NOx formation are flame temperature, the length of combustion time, combustion pressure, and excess oxygen. NOx formation can be reduced by (a) reducing nitrogen level at peak temperature, (b) decreasing oxygen availability, (c) reducing peak temperature, or (d) reducing residence time in the combustion zone. Combustion modification is the most cost effective and energy efficient

technology used to control combustion generated oxides of nitrogen. Successful combustion modification reduction techniques include: Low Excess Air Combustion, Flue Gas Recirculation, Stage Combustion, Low NOx Burners, and Catalytic Combustion.

Particulates: The primary sources of particulates are the process heaters and boilers, the FCC regenerator, coke handling, gas turbines, and solid waste incinerators. Particulates can be controlled by the use of wet scrubbers, high efficiency mechanical collectors, electrostatic precipitators (catalyst regenerators), controlled combustion, controlled stack and flame temperatures and improved burner and incinerator design.

2.3.3 Solid Waste Pollution Controls

Typical solid wastes generated at a refinery include: process sludges, spent catalysts, wastewater and raw water treating sludges, and various sediments (Table 2). Treatment and disposal methods are contingent upon the nature, concentration and quantities of waste generated, as well as upon the potential toxicity or hazardous characteristics of these materials. Pollution control methods are further affected by geographic conditions, transportation distances, disposal site hydrogeological characteristics and regulatory requirements.

Several options available for ultimate disposal of refinery wastes include: incineration, land treatment, landfilling, and chemical fixation. In all cases the preferred choices are landfilling or land treatment.

2.4 Conservation

Conserving water, energy and raw materials is essential to the cost effective operation of a refinery. Pollution and disposal problems can be reduced simultaneously. Energy consumption, or costs, are reduced by using hydrocarbon wastes for fuel, installing more fuel efficient boilers, and recycling waste heat. Good maintenance programs and operating practices play a significant roll as well in conserving energy. Energy conservation results in a more cost effective operation, and it also reduces pollution and the consumption of limited resources.

Water usage in most refineries is commonly very high. Conservation is important to (a) reduce the quantity of contaminated water discharged to the environment and (b) reduce the consumption of water, a valuable resource, especially in arid climates. As described, there are many methods to remove contaminants from wastewaters. Salts, oils, dissolved organics, and particulates can be removed to make water recycling and conservation possible. At many refineries the engineering staff do detailed studies on water mass balance. They will determine the minimal water quality necessary for each process. Wastewater from the cooling tower, for example, can be used for fire water even though it will contain some oil and will have higher salinity. The goal for water use in many refinery cooling towers is three passes through the tower. Through these studies, an elaborate system of water treatment and recycling in many refineries has conserved water consumption and greatly reduced contamination of the environment. Unfortunately, most of this work is considered a competitive advantage and is therefore unpublished.

Cooling systems such as cooling towers can consume up to one half the water usage in a refinery. In arid regions where water is scarce, normally once through cooling water systems are eliminated and the water is recycled three to five times. But, if any abundant water supply, even sea water, is available, then a once through system is used. Recycling usually requires treatment of the water at the facility. Recycle water treatment will include filtration, ion exchange, lime softening and reverse osmosis processes.

Water is often conserved by minimizing wastewater production by controlling raw material usage. Raw materials (such as chemicals for the processes) usage is minimized by establishing an effective program for optimizing quantities and applications. For example, chemical overtreating is common. The excess chemical typically finds its way into water and contaminates it. Reliable metering systems should be installed, pilot testing performed to establish optimum usage quantities, and the equipment should be maintained properly.

Water conservation can also be improved by reducing the clean-up and domestic water use of a facility. Water use in cleanup can be reduced by using recycled brine, by using pressurized steam cleaning rather than high water volumes with detergents, and by initiating a program to minimize water use (i.e., hoses are not to be left running when not in use for cleaning).

Another water conservation method involves separating classes of water throughout transport and treatment. Then the treated water can often be recycled back into plant process units when the water quantity is sufficient for that process. An example is the reuse of treated domestic waste in the refinery cooling system. Any salty backwash waste slurries from reverse osmosis, ion exchange and boiler blowdown are kept separate from the domestic wastes. The brines instead are deep-well injected (10,000 to 15,000 ft) to remove salt from the waste system and thus enable the reuse.

Process water is often recycled and the primary example, sour water stripper bottoms, will be discussed. Sour water strippers remove hydrogen sulfide, ammonia and phenols from refinery foul process waters before discharge or reuse. Typical performance is 95 to 99.9 percent sulfide removal, 70 to 98 percent ammonia removal, and 30 to 60 percent phenol removal. Except for the remaining phenol, oil, cyanide and ammonia, the stripper bottoms are essentially distilled water, and therefore are often considered for reuse. Four common reuse practices for sour water stripper bottoms are for desalter water, process washwater, cooling tower makeup or boiler makeup water. Such reuse possibilities reduce fresh water needs and remove up to 98 percent of the refinery effluent's phenol content, and, greatly reduces biochemical oxygen demand, chemical oxygen demand and total organic carbon. Additionally, since stripper bottoms contain only minor amounts of dissolved gases and no dissolved solids, it is ideal desalter water if properly stripped.

Some plants reuse effluent water after partial or complete waste treatment to conserve water and to improve discharge quality. One refinery has charged API separator effluent to its cooling towers for bio-oxidation of phenols. The wastewaters include effluent from the sour water stripper, other process condensates, pump gland and miscellaneous drainage, all stormwater drainage, tank bottom waters, crude desalting water, boiler blowdown, water plant backwash and rinse water. Oil removal in the treatment system is usually 99.9 percent. The bio-oxidation

tower blowdown is sent to a final API separator, then to a single pass induced draft cooling tower for cooling and aeration and then through final upflow filters. As a result of this water conservation, this refinery has fresh water demand of 0.21 m^3/bbl of crude vs the US refinery average of 8.13 m^3/bbl of crude.

3.0 THE PETROLEUM REFINERY INDUSTRY IN JORDAN

3.1 The Refinery Environment and Processes

The Jordan Petroleum Refinery Company is located in Al Hashymia, approximately 5 kilometers north of Zarqa. It is a public limited company, but the company is government monopoly for 20 more years. The company supplies most of Jordan's fossil fuel needs.

The refinery was built in the late 1950s and began operating in 1961. It was expanded in 1970 and again in 1980. Total land area of the refinery is 420 hectares. The land is occupied by tank farms, processing and production facilities, product distribution services, employee housing, and forest areas.

The refinery operates its own water wells and discharges its industrial effluents within the premises, mainly as irrigation of a 76 hectare forest. It has very large water demands: the refinery consumes approximately 7,000 cubic meters of water per day and discharges 4,000 cubic meters per day of industrial wastewater to irrigation, after limited on-site treatment. In addition, the refinery's employee housing is connected to a sewage treatment plant.

Approximately 2,000 people are employed at the refinery. The facility operates year-round, 24 hours a day. From time-to-time a refinery process is shut-down for maintenance; however, since refining capacity is below market demands, shut-downs are rare and brief. In 1992, Jordan consumed three million tons of crude oil. The crude oil is imported in the form of desalted crude from neighboring Arab countries. The oil was once transported through pipelines, but now tanker trucks are the only mode of transport. Some liquid petroleum gas, diesel and gas oils are also imported to supplement local production. The refinery products meet local fuel and some local blended lubricating oil consumption demand.

The Jordan Petroleum Refinery Company produces asphalt, diesel oil, gasoline, heavy fuel oil, jet fuel, kerosene and liquid petroleum gas (LPG) as final products. The 1992 production volumes are listed in Table 3.

The main refining processes at the Jordan Petroleum Refinery Company include the following: atmospheric and vacuum distillation, hydrotreatment, catalytic reforming, and fluid catalytic cracking (Figure 2). The refinery also operates several product treatment processes, a lubricating oil blending facility, a plant for fabrication of LPG bottles and petrol station storage tanks, and a maintenance and washing station for its transportation fleet.

3.2 Refinery Waste Discharges and Recycling

Specific information regarding the above processes, the waste streams they produce, and the waste handling and treatment methods cannot be confirmed. Harza received only limited information regarding the Jordan Petroleum Refinery Company at the time this report was assembled. Harza will obtain more detailed waste generation/recycling/treatment information at the Jordan Petroleum Refinery Company during the facility audit.

An overall representation of the Jordan Petroleum Refinery Co. water and wastewater flow is shown in Figure 3. Approximate water flows and balances are given when known. Note that water for cooling water is about 50% of the total consumed. About 50% of that water is lost to evaporation, generating a saline blowdown.

3.2.1 Wastewater Discharges

The major sources for generation of wastewater are:

- steam stripping columns;
- vacuum distillation unit;
- asphalt unit;
- non-contact cooling;
- boiler blowdown;
- ion-exchange regeneration water;
- process cleaning and washing; and
- domestic.

Process Discharges: Steam is used in all stages of the refining. The boiler feed water is demineralized, chlorinated and filtered by reverse osmosis. All the minerals and backwash is discharged in a saline wastewater stream to the treatment plant effluent. In atmospheric distillation, all topping units use steam, mainly for the reboiler but also for stripping. The stripping steam condenses in the overhead condenser as water phase from the product-water separators. The unit 1 overheads are water cooled, but the other two units' overheads are air cooled. All three units use steam for the reboiler and stripping. Steam from the reboiler is returned as steam condensate for boiler feed. The stripping steam condenses in the overhead condenser and is separated out in the product-water separators. Before condensation, ammonia (NH_3) is added in order to neutralize the hydrogen sulfide (H_2S) coming from the crude distillation. Neutralization of H_2S is a means of avoiding or minimizing piping corrosion. The main pollutants are miscible oil, dissolved oil, NH_3, H_2S and mercaptans (odorous sulfur compounds) in the water. This stream is referred to as sour water.

In vacuum distillation, the low vacuum pressure is maintained by steam ejectors. A wastewater results which is high in hydrocarbons.

In fluid catalytic cracking, the catalyst is stripped with steam to remove oil. In the regenerator, the hot catalyst comes in contact with a counter-flow of air that burns off a thin layer of carbon from the spent catalyst and provides the heat necessary to maintain the cracking process. The regenerated catalyst is then recycled into the FCC unit with the incoming gas oil feedstock. The main water pollutants from the fluid catalytic cracking unit are hydrogen cyanide and soluble plus non-soluble hydrocarbon.

The cooling water blowdown rejects about 60 m^3/h of saline water with a conductivity of 4,000 uS/cm to the refinery wastewater. This is a once through system and constitutes the largest single saline water source in the refinery discharges. It is estimated that the

salt in this water, plus that from ion exchange and reverse osmosis, totals to about 5,000 ton/yr.

Wastewater discharge: Wastewater discharge is for the most part through an industrial wastewater treatment plant. But, stormwater runoff occasionally occurs through the drainage system and oil catcher before discharging to the Wadi. All streams which are expected to contain oil are conducted via an oily water sewer system to the API separators. The pollutants in the oily sewers are all types of spilled products - mostly hydrocarbons. The wastewater treatment plant consists of a sour water stripper, an API oil separator, two parallel flotation units, and stabilization/sedimentation ponds. Approximately 100 to 120 m^3/h of wastewater is treated in the wastewater treatment facility. This water then is pumped to a common water tank from where it is used on site for "irrigation".

The effluents going to the irrigation tank are a mixture of:

- the stabilization/sedimentation pond discharges;
- regeneration water from the ion exchanger;
- reject water from the reverse osmosis unit; and
- blowdowns from the cooling towers and boilers.

This water is normally used for irrigation (land application regulated by Jordanian Standard 202). The chemical analysis is shown in Table 4. Note that three parameters for irrigation are above the Jordanian Standards: total dissolved solids. ammonium nitrogen and hydrocarbons. The high TDS can cause soil degradation, inhibiting plant growth and detrimentally affecting groundwater salinity. The high ammonia would only be a problem if it enters either groundwater used for drinking, or surface water where it could be at levels toxic to biota.

The sanitary wastewater is treated in a separate biological treatment plant. This wastewater is similar to domestic sewage. The effluent from the plant is connected to the WAJ sewer leading to As Samra Wastewater Treatment Plant.

3.2.2 Sludge Generation and Treatment

The solid wastes and sludges generated at the refinery include; process sludges, spent catalysts, water treating sludges and various sediments (Table 2).

Most of the sludge volume from typical refineries derives from the treatment plant ponds. But, for the Jordan Petroleum Refinery the sludge volumes and makeup from each source are not in the referenced documents.

The disposal methods for the sludges varies. The sludge from the dissolved air flotation unit is pumped to a sludge tank and ultimately resides in a sludge pond. Slop oil sludges are transferred to the sludge pond as well. Sludges from the aeration lagoons are taken to a landfill for disposal. The third method of sludge disposal is road-spreading onsite.

There is no indication whether any of the sludges, slop oils or emulsions are treated for efficient separation of the oil, water and solids (filtration, centrifugation, etc) before final disposal.

3.2.3 Air Emissions

Air emissions vary significantly in quantity and type with process fluctuations. The major air pollutants from the refinery are likely; hydrocarbons, sulphur dioxides (SO_x), ammonia, nitrous oxides (NO_x), and particulates. The most significant single air pollution source is said to be the incinerator, at which approximately 16 - 18 t/d of sulfur, together with ammonia, is incinerated. The incinerator then emits the sulfur as oxides (SO_2 and SO_3) and the nitrogen oxides (NO_x) in very large quantities. Since El Hashimiya is nearby, these emissions can present a serious health hazard to town residents as well as the workers in the refinery.

4.0 AREAS FOR POTENTIAL IMPROVEMENT

Beyond assembling background information regarding petroleum refineries, the primary purpose of this document is to present information gathered from the literature search regarding the latest advances in water conservation, pollution prevention, and waste minimization.

The subjects can be defined as follows:

> Water conservation: reducing the process, clean-up, and domestic water use requirements of a facility.
>
> Pollution prevention and waste minimization (PP/WM): reducing the volume or concentration of air, water, and solid waste discharges from a facility. PP/WM can be accomplished by implementing process improvements to actually reduce the amount of wastes generated or by developing a beneficial reuse for the waste and transforming it into a marketable by-product.

Components of PP/WM then are: source reduction, in-process recycling, use of clean technology, substitution of raw materials, preventative maintenance and applying technology to wastes such that environmental impact is eliminated or minimized.

The following sections identify areas for potential improvement at the Jordan Petroleum Refinery Company using state-of-the-art techniques. The areas for improvement are suggestions for a typical petroleum refinery only. Their applicability and net benefit to the Jordan Petroleum Refinery Company depends on plant specific factors, which will be identified during the Harza plant audit.

The improvements have been categorized in the following sections according to their goal of water conservation or PP/WM. In cases where an improvement may accomplish more than one goal, it is listed in the category in which it would be expected to have the greatest impact. Because the focus of this report is on state-of-the-art technology, we have omitted information regarding the more mature technologies which are typically standard at refineries (i.e. electrostatic precipitators to reduce particulate emissions).

4.1 Water Conservation

The recycling of treated process wastewaters is limited because the existing wastewater treatment facilities often don't produce effluents which meet the necessary water quality of that process. Decisions regarding water conservation and reuse depend on facility-specific characteristics as well as site-specific water supply and environmental factors (e.g. water availability, cleaning costs, quality needed).

Personal contacts with refinery engineers indicated that the specific information is considered confidential and is not therefore in the public domain. The techniques that were identified are general and primarily address water reuse. These are listed below:

- Recirculate process water wherever possible. If metal deposition and corrosion in the recirculating water piping systems becomes a problem, use water softeners and corrosion inhibitors in those systems to extend the useful life of the water. Adjust the water chemistry as necessary to recirculate: Remove hardness, desalinate with reverse osmosis, and filter solids. The greatest gain could be in transforming the cooling tower once through cycle to a multiple cycle system.

- Minimize water use by reducing equipment cleaning frequency unless frequent cleaning is necessary for efficient equipment operation. In addition, reuse equipment cleaning water when possible. Equipment cleaning waters can often be successfully reused since they do not necessarily have to be completely clean, but simply cleaner than the equipment they are washing. Use steam and/or hot water to clean rather than large volumes of water containing detergents.

- Use air and fan cooling in place of water cooling wherever possible.

- Maintain equipment and processes to minimize leaks of oil that will contaminate water.

- Reuse contaminated water from one process, in a process more tolerant to those contaminants. For example, treated domestic sewage may generate a water having quality sufficient for cooling water.

- Capture stormwater; treat out any oil and use it for boiler water.

- Isolate highly saline wastewater for deep-well injection and avoid contaminating other water with recycle potential.

The bulk of the recirculated water in a typical refinery is cooling water. Fouling of the heat exchangers and a reduction of heat transfer is a major problem. To suppress these problems, chemicals are normally added to the water. Algaecides and fungicides are added to prevent organism growth. Scale inhibitors are added to prevent scale formation. Corrosion inhibitors are added to prevent corrosion of the metallic components of the heat exchangers. When the total dissolved solids becomes too high, some of the water is removed from the "closed system" as blowdown water. That water is replaced by clean water.

Conventional water conservation practices include:

- Recovery and reuse of steam condensates, and process condensates where possible.
- Process modifications to recover more products.
- Effective control of cooling tower treatment/blowdown to optimize cycles of concentration.
- Control of water uses and good maintenance of raw water treatment systems.
- Installation of automatic monitoring and alarm systems on in-plant discharges.

Some typical techniques for conserving and reusing water in a refinery are: condensate recovery, reverse osmosis, steam stripping, water softening, dry fan cooling, air fan cooling and

recirculation of separator water.

4.2 Pollution Prevention/Waste Minimization

This section includes information regarding the wastewater, solid waste, and air emission PP/WM techniques identified in the literature. The majority of the information applies to solid wastes. This section contains a description of practices that can be used to minimize the generation of wastes and residuals produced by petroleum refinery operations. The waste minimization practices can be categorized as source reduction, recycling or treatment. Some techniques may involve construction of capital equipment. Others may be implemented by changing operating or maintenance procedures. As refinery configuration and crude characteristics vary, so will the applicability, effectiveness and practicality of the waste minimization practices.

4.2.1 Wastewater PP/WM Techniques

Major wastewater PP/WM techniques are summarized below.

Control of Solids into the Wastewater System: Control of solids releases into a refinery wastewater sewer can be a very effective means of minimizing the generation of oily sludges. The incentive for controlling solids releases into the wastewater system is significant. Minimization practices that can be used to reduce the quantity of solids released to refinery sewers include:

- Runoff control.
- Control of exchanger bundle cleaning solids.
- Control of FCCU and coker fines.
- Minimization of fine solids recycling.
- Control of surfactant use.

Surfactant Use Control: The uncontrolled addition of surfactants to the refinery sewer system will also tend to increase the sludge generation. Surfactants that can be present in wastewater treatment systems include detergents used to wash refinery equipment and vehicles, and organic polymers used to break emulsions or otherwise aid in oil-water separation. One mechanism to reduce sludge formation is to avoid the introduction of surfactants into an oily wastewater stream immediately upstream of a high-speed pump. The pump's shear force will promote mixing of the oil and surfactant, resulting in emulsion and sludge. In addition, high-pressure water and steam washes can often effectively replace detergents in cleaning processes.

Desalter Brine Treating: In some refineries, the desalter can add a significant quantity of oil and solids to the process wastewater system. Desalters in refineries with crude charge rates that have increased significantly over the years may tend to accumulate more oil in their wash water if the desalter vessel is undersized for current crude charge rates.

Pretreatment of desalter brine prior to release to the process wastewater sewer may be undertaken to:

- Reduce solids load into the process wastewater sewer. Destabilize and separate the oil/water emulsion present in desalter brine before it contributes to formation of additional emulsified material in the sewer.

- Reduce oil load to the wastewater sewer. Reduce the concentration of certain soluble organic constituents present in crude oil that may present treatment or discharge problems if not treated at the source.

Spent Caustics Treatment: Caustic treatment to remove H_2S and mercaptans from gas and product streams produces a spent sulfidic caustic which must be carefully managed to avoid release of hydrogen sulfide. Caustic treatment may also be used to remove phenolics, cresylics, and naphthenics from refinery naphtha and distillate streams. Because discharge of spent phenolic caustics to refinery wastewater adds surfactant load that will lead to the production of additional emulsions and sludges, caustics are generally segregated and handled separately. They are normally recycled, either offsite or onsite.

Cooling Tower Blowdown Minimization: Measures are usually taken to minimize cooling water blowdown sludge. Briefly, techniques for minimizing the quantity of blowdown include: makeup water quality adjustment (by either source control or water treatment) and recirculating water treatment. If the concentration of dissolved solids in the cooling water is kept low, more water (cycles of concentration) can be run through the cooling tower. Total dissolved solids (TDS) can be removed from the cooling water makeup stream by: cold lime softening, reverse osmosis or electrodialysis. These technologies are frequently employed to improve the quality of fresh water makeup rather than for blowdown minimization.

Makeup water treatment can minimize waste production while conserving refinery cooling water makeup. Parameters of concern include the concentrations of calcium ion, sulfate, silica and pH. Table 5 shows how treatment of cooling tower water can improve water recycling, and therefore conservation is improved.

Stormwater Diversion and Reuse: Many refineries have areas that collect stormwater which is free of oil and which contains very low natural contamination. Such areas include streets, parking lots, and certain tank farm areas that are segregated and often drain directly to storm sewers without treatment. Use of stormwater as cooling tower makeup may be feasible in some situations, but there are several factors which would need careful consideration. Most stormwater collected from relatively clean areas will be low in hardness and dissolved solids and can be pumped to cooling tower makeup.

Washdown Water Minimization: Washdown water in many refineries is minimized by using hot water and/or steam rather than detergents with large amounts of rinse water. Of course, any washdown areas are paved. Spills must be minimized. The washdown water is captured in drains which lead to oily/water separators from which oil is returned to some refinery stage and the water is used wherever its quality permits.

Good Maintenance to Minimize Petroleum Leaks: Any leaking crude or product

usually either contaminates soil or water. Most refineries have programs to try to prevent this type of pollution; pipe thickness are routinely checked, corrosion control is used wherever necessary, seals are maintained and operating practices are mandated to prevent the contamination of water and soil with petroleum products.

4.2.2 Solid Waste and Sludge PP/WM Techniques

Many state-of-the-art PP/WM techniques for refinery solid wastes and sludges have been identified in the literature. The techniques address spent catalysts and caustics, solvents, waste oils, tank bottoms, petroleum contaminated soil, and three types of sludge: oily sludge, high-sulfide sludge, and fluid catalytic converter sludge. Each of these techniques is briefly described below.

Tank Bottoms: In any attempt to minimize waste in refinery operations, attention should be given to minimizing tank bottoms. Tank bottoms, which are the solid or semi-solid materials or sediment that accumulate in the bottom of storage tanks, can constitute a large percentage of waste in a refinery and often present difficulties for disposal.

Minimizing the quantity of tank bottoms during the cleaning procedure is key to reducing the amount of tank bottom waste generated. Most importantly, as much free oil and water as possible, even that portion below the pump suction line, should be removed before the tank is taken out of service. Some refineries operate filters or centrifuges on a routine basis to treat tank bottoms to minimize waste disposal and to recover oil and water separately.

Slop Oils: A typical refinery generates a broad array of intermittent slop oil streams originating from either operations or maintenance activities. Slop oils represent a large volume of recyclable materials in refineries, and taking advantage of this can significantly decrease waste generated in many refineries.

Slop oil streams of significant volume are often pumped to a slop oil tank where they are treated and ultimately recycled back to the crude units. Operation and maintenance procedures should be setup, which preclude draining these slop oils to the sewer system. Faster startup and shutdown procedures are being developed which result in less waste generated.

Recycling to outside service companies is effective for certain oil streams. Some recyclers take used lube oils from vehicles and heavy equipment for re-refining to usable products or inclusion in certain waste fuels.

Solvents: Various solvents are used in maintenance activities within refineries to clean or degrease equipment. In the process, the solvents become contaminated with hydrocarbons and solid particles, such as sand and metal. The solvents are typically sent to an off-site vendor for recycle.

There is, however, a PP/WM alternative to vendor supplied solvents: an on-site distillation and reclamation system. Package systems are available to handle different types of solvents.

Waste Oils: A typical refinery generates a broad array of intermittent waste oil streams originating from operations and maintenance activities. Examples of waste oil streams are off-specification products, start-up or shut-down streams, and used lube oils from vehicles and equipment. These waste oil streams represent a large volume of recyclable material and taking advantage of them can significantly reduce the volume of waste generated.

To recover waste oil, streams of a significant volume can be pumped directly to a tank, where they can ultimately be recycled back to the crude oil stream. Operation and maintenance procedures should be used which preclude the need for draining oil to the sewer system. Faster start-up and shut-down procedures should be developed which will result in less waste being generated during those crucial times.

Petroleum Contaminated Soil: Petroleum product spills on soil are typically excavated and landfilled. State-of-the-art treatment techniques for this waste include bio-stimulation of the soil and low-BTU incineration.

> Bio-stimulation with microorganisms is considered a good approach for low concentration spills. Soil is a good sorbent and a good environment for a diverse population of microorganisms which can degrade the petroleum product. Under the right aeration and mixture conditions the process can be considered in-situ; otherwise some soil preparation is required. The soils can later be used to support on-site fill needs.
>
> Low-BTU incineration requires removal of the soil and incineration in a kiln or low-BTU incinerator with fuel-value recovery.

To prevent or minimize oil spills in the first place, practice "careful" sampling techniques and keep all pipelines above ground to more easily detect leaks.

Sludges: Many PP/WM techniques have been identified in the literature for sludge wastes. The following sections focus on the PP/WM methods described for oily sludge, high-sulfide sludge, and fluid catalytic converter sludge.

> Oily Sludge: Oily sludges are emulsions formed by a surface attraction among oily droplets, water droplets, and solid particles. Without solids, the sludge will not form. Therefore, one of the most effective ways to minimize oily sludge generation is to reduce the release of solids and surfactants to the wastewater treatment system. Other methods involve the use of equipment to recover oil for recycling, such as filtration, centrifugation, and thermal treatment. All methods are briefly described here.

Filtration: Filtration is a mechanical separation technique that is very effective for reducing sludge volume and for recycling oil. Belt presses, recessed chamber pressure filters, and rotary vacuum filters can all be used for this purpose. In general, the filters consist of upstream facilities to handle and condition oily waste, and downstream facilities to separate oil and water and take away the sludge filter cake. The oil is recycled to the refinery and the water is drained to the wastewater treatment unit. The sludge filter cake represents a much smaller volume of sludge than that which would have been generated in the wastewater treatment unit if the filtration process was not employed.

Centrifugation: Centrifugation, like filtration, is a mechanical separation process for sludge reduction. It and filtration are interchangeable, depending on the operating methods and waste characteristics of a particular refinery. In centrifugation the rapid spinning of a cylindrical container forces denser materials to the outer wall of the cylinder, where they can be removed. Centrifuges typically used in the petroleum industry are the scroll and disc type machines. They separate oil, water and solids, thereby generating useable oil and smaller waste sludge volumes.

Thermal Treatment: Thermal treatment reduces sludge volume by vaporizing the sludge's water and volatile organic components, leaving behind a dry, solid residue, condensed steam, and petroleum. Thermal treatment systems include conveyers, feed hoppers, the thermal processor itself, a steam condenser, a water-oil separator, and a residue quench system. The thermal processor is heated with hot oil to approximately 400°F under anoxic conditions.

High-Sulfide Sludge: Some refineries have successfully used hydrogen peroxide to treat high-sulfide content sludges and their leachates. In this process, the pH of the waste is adjusted to between 7 and 10 and added to a vessel of low concentration hydrogen peroxide. The result is a lower-sulfide waste. Sulfide levels of more than 5,000 parts per million have been reduced to less than 200 parts per million.

Fluid Catalytic Converter Sludge : Heavy gas oil from the bottom of the fluid catalytic converter unit typically contains catalyst fines in a concentration ranging from 0.2 to 0.4 percent by weight. The presence of the fines inhibits the recycling of this oily sludge. Filtration, centrifugation, and chemical treatment systems are available to minimize the catalyst fines in oily sludge, thus allowing its recycle as oil.

4.2.3 Air Emissions PP/WM Techniques

Only one air emission stream has been targeted for state-of-the-art PP/WM in the literature: tail-gas sulfur recovery system wastes.

Some refineries have systems to recover sulfur from waste streams so they can sell it for profit. A sulfur recovery plant generates an exhaust gas stream, called a tail-gas stream, that contains several sulfur compounds which must be removed before emission to the atmosphere. To remove sulfur compounds the tail-gas is typically contacted with solution in an absorber and the hydrogen sulfide in it reacts to produce elemental sulfur and vanadium salt. In addition, several side reactions take place which produce sodium thiosulfate and sodium sulfate. Control of these compounds has traditionally been accomplished by utilizing a continuous purge stream or by changing out the entire solution inventory when the salt levels get too high.

MDEA conversion and ADA and vanadium recovery processes are state-of-the-art tail-gas cleaning techniques that have been developed to eliminate the discharge of aqueous H_2S wastes.

4.2.4 General PP/WM Techniques

Several general techniques for reducing or eliminating refinery facility wastes are identified in the literature. The techniques range from simple material handling changes to the installation of new equipment and training of personnel. Noted techniques include:

- Use of optimum process temperatures, pressures, and mixing ratios for maximum product recovery and waste reduction.

- Recycle of materials whenever possible. For example, the following materials have been successfully recycled at refineries: fluid catalytic cracking catalyst, spent caustic, and sludge. Oily sludges, including wastewater sludges, can be agitated with steam and air to directly recover the residual oil or can be recycled through the processing units to convert the oils into products. Phenols and caustics produced in the refining operations can be used as chemical feeds in other applications.

- Development and implementation of a leak monitoring and inspection program. For example, hoses, pipes, valves, pumps, and seals should be checked and necessary repairs should be made.

- Neutralization of liquid acid and alkaline residues by mixing them together.

- Segregation of polluting and non-polluting waste streams to avoid contaminating a larger volume of waste than necessary.

4.3 Conclusions

Relative to the water usage and waste discharges/emissions of refineries in a similar environment, the Jordan Petroleum Refinery appears to have significant potential for improvement (assuming the literature in hand is accurate). But, the Jordan Petroleum Refinery will necessarily need to have systems developed specifically for their unique

needs (processes, environment, water resources). The areas to address (including solid wastes and air emissions) are:

A) Water

- Isolation and separate treatment of brines.
- Reuse of irrigation water in the processes.
- Treatment of domestic sewage and reuse of the water in the process.
- Control of stormwater, treatment and use as boiler water.
- Treatment and reuse of condensates.
- Treatment and reuse of sour water.
- Evaluate use of Wadi water for cooling water.
- Recycling the cooling water to have multi-pass.
- Minimizing washdown water usage and detergent additives.
- Reuse of API separator water as cooling-water or fire water.
- Filtering water in stages to enable process reuse.

B) Solid Wastes

- Controlling solids from becoming part of waste stream; i.e. sediments and soil entering the waste.
- Minimizing/eliminating spills with a spill program.
- Controlling catalyst solids.
- Capturing stormwater in a manner to minimize solids entrainment.
- Dewatering process and treatment plant sludges.
- Deoiling sludges with filtration, centrifugation and/or thermal treatment.
- Disposing oily sludges so as to not contaminate soils.
- Recycling slop soils and used oils back into refinery process.

C) Air Emissions

- Eliminating or greatly reducing sulfur gas emissions.
- Controlling nitrogen oxide emissions.
- Minimizing volatile organic carbon losses.
- Controlling steam losses through good maintenance.

5.0 SUMMARY

In the proceeding sections, technologies and methods were discussed for potential application at the Jordan Petroleum Refinery Company to potentially; prevent waste production, minimize waste quantities, recycling water and controlling waste discharges/emissions.

With the very limited information on the refinery, it appears that there may be many technological options to: A) recycle water and/or reduce environmental effects of water discharges, B) decrease, reuse or detoxify solid wastes, C) decrease and/or detoxify air emissions, and D) conserve on water usage. Often investments to recycle or minimize waste can pay for themselves by gained product/raw materials for sale or use. Application of these PP/WM technologies should provide for less long term environmental degradation, which will benefit the refinery, its workers and the nearby communities.

For example, the groundwater used in the plant is becoming increasingly saline, possibly from saline surface discharges. As the quality of the source water degrades, more plant problems will result and eventually, expensive pretreatment of the source groundwater will be necessary. A detailed mass balance study of water uses, discharges and quality should help to identify methods and technologies to greatly reduce groundwater use through application of recycling and conservation technologies.

Solid wastes (including slop oils) are not quantified in received refinery reports. But, documentation of treatment technologies indicates a significant potential to apply new technologies to reduce sludge quantities, to recover significant product, or, increase the cost efficiency of other processes through recycling.

Air emissions were not quantified in received refinery reports. But, it appears that SO_x, NO_x and volatile organic hydrocarbons could be more controlled to reduce human health and environmental effects. Again, recovery of the fugitive hydrocarbons as product and the SO_x as saleable sulfur can help pay for the treatment processes installations.

6.0 REFERENCES

The following documents were reviewed to prepare this report. The essential components of each are included as an appendix to this report under a separate cover.

1. American Petroleum Institute. The Generation and Management of Wastes and Secondary Materials in the Petroleum Refining Industry; 1987-1988. API Publication No. 300. February, 1991.

2. American Petroleum Institute. The Generation and Management of Wastes and Secondary Materials. Petroleum Refining Performance 1989 Survey. June, 1992.

3. American Petroleum Institute. Petroleum Industry Environmental Performance: 2nd Annual Report of Strategies for Today's Environmental Partnership. 1992.

4. American Petroleum Institute. Waste Minimization in the Petroleum Industry; a Compendium of Practice. Health and Environmental Affairs, Publication No. 3020. November, 1991.

5. Bland, W.F. and R.L. Davidson. Petroleum Processing Handbook. McGraw-Hill, New York, 1969.

6. Khaleq, Rania. Ministry of Water and Irrigation, Jordan. Background Information on Jordan Petroleum Refinery Company.

7. Murphy, S.R., E.L. Whittington, and S.J. Yanik. "Refiners Tackle Solid and Chemical Waste Handling Problems." *Oil & Gas Journal.* July 28, 1986.

8. National Petroleum Council, "State-of-the-Art Technologies for Pollution Control in Refineries."

9. Poche, L.R., R.E. Derby, and D.R. Wagner. "Solvent Extraction of Refinery Wastes Rates EPA BDAT." *Oil and Gas Journal.* Jan. 7, 1991.

10. Samoklin, V.H., ed., Design Handbook of Wastewater Systems. Vol. 3., 1981, Strorizdat Press, and 1986, Allerton Press, Inc.

11. Sanitation Districts of Los Angeles County. "Oil and Gas Extraction Pollution Prevention Opportunities Checklist." Prepared by Philip Lo. CSPLA. November, 1990.

12. Shreve, R.N., and J.A. Brink. Chemical Process Industries, 4th Edition, Chapter 37, (Petroleum Refining). McGraw-Hill Book Co. 1977.

13. Thurber, N. Amoco Oil Co. Information on Refinery Waste Quantities and Handling Methods. Personal Contact with Jeff Cline of Harza. August, 1994.

14. U.S. Environmental Protection Agency. Interim Findings Supplement for Pretreatment to the Development Document for the Petroleum Refining Industry Existing Point Source Category. EPA 440/1-76/083A. March, 1977.

15. U.S. Environmental Protection Agency. Petroleum Refining Industry. Prepared by R.F. Weston, Inc. for the U.S. EPA under Contract No. 68-01-0598. June, 1973.

16. U.S. Environmental Protection Agency, Office of Toxic Substances. "Pollution Prevention Options in Petroleum Refining." September.23, 1991. EPA Contract No. 68-WO-0027.

17. The World Bank/Ministry of Planning, the Hashemite Kingdom of Jordan. Industrial Pollution Control Project in Jordan, Project Component 2, Industrial Wastewater Pretreatment Requirements. Vol. 3: Industrial Reviews 1, Jordan Petroleum Refinery Co. Ltd., compiled by COWIconsult and RSS. June, 1994.

TABLE 1:

SOURCES OF REFINERY AIR POLLUTANTS

POLLUTANTS	SOURCES
Hydrocarbons	Loading/unloading facilities, sampling storage tanks, wastewater separators, blow-down systems, catalyst regenerators, pumps, valves, cooling towers, vacuum jets, air blowing, process heaters, boilers, compressor engines, distillation towers, separators, etc.
Sulfur oxides	Boilers, incinerator, process heaters, cracking operations, regenerators, treating units, H_2S flares
Nitrogen oxides	Process heaters, boilers, compressor engines, catalyst regenerators, flares, incinerator ..
Particulate matter	Catalyst regenerators, boilers, process heaters, incinerators, flares
Odors	Treating units, biotreatment units, wastewater plant ponds, tank vents, sumps, drains, chemicals open to air
Ammonia	Waste treatment ponds, water stripper, waste caustic, distillation and catalyst regenerators.

TABLE 2:

TYPICAL REFINERY SOLID WASTES WITH DESCRIPTIONS

SOLID WASTE	CHARACTERISTICS
Crude oil tank bottoms	Oil-water emulsion containing sand, dirt, inert solids metals.
Leaded tank bottoms	Precipitated organic (alkyl) lead compounds, other destabilized additives, tank scale, and other heavy metals.
Nonleaded tank bottoms	All petroleum products except slop oil, crude oil tank bottoms, leaded gasoline bottoms, and corrosion products
API separator sludge	Heavy black oily mud; phenols, metals including those in leaded tank bottoms, chromium, and inert solids.
Spent filter clays	Clay filter cake with metals and oil.
Cooling water sludge	Silt and other settleable solids in raw water supply, leakage from processes, corrosion products, treatment chemicals.
DAF float	Brown to black oily sludge and heavy metals
Slop oil emulsions	Mixture of crude and other petroleum fractions recovered from spills and separators.
Solids from boiler feedwater treatment	Slurry of spent lime from softening of feed water inert solids
Cooling tower sludge	Grey to black silt-like sludge having chromium, zinc and corrosion products together with oil from processing leaks.
Exchanger bundle cleaning sludge	Mixture of metal scale, coke, particulates, and oil.
Waste biosludge	Organic cell material from secondary wastewater treatment with oil
Stormwater silt	Soil, oil, spilled solutions, metals, coke fines, etc. from stormwater runoff.
FCC catalyst fines	Fine grey powder consisting of aluminum silicate catalyst fines with adsorbed heavy metals; primarily vanadium and nickel, inert solids, and various heavy metals
Coke fines	Grey, porous chunks and fines from coking processes.
Oily soils	Soils contaminated with spilled oil

TABLE 3:

JORDAN PETROLEUM REFINERY PRODUCTION

PRODUCT	TONS PRODUCED IN 1992
Asphalt	123,709
Diesel Oil	753,283
Gasoline	431,574
Heavy Fuel Oil	901,440
Jet Fuel	9,936
Jet Fuel	199,930
Kerosene	297,786
Liquid Petroleum Gasoline	121,265
TOTAL	**2,838,923**

HES 3439KVM/ksb3
H0005HD 941025

TABLE 4:

WATER ANALYSES FROM THE IRRIGATION POND OUTLET (JAN 1993)

Parameter	Average Analysis - 4 da	Jordanian Standards
pH	8.0	6.5 - 8.4
EC (uS/cm)	3612	None
TDS (mg/l)	3000	2000
TSS (mg/)	40	100
BED (mg/l)	41	None
COD (mg/l)	136	None
Hydrocarbons (mg/l)	16	5
NH4-N (mg/l)	16	4.1
CN (mg/l)	<0.05	0.1
Phenol (mg/l)	0.18	None

TABLE 5:

SOLID WASTE MANAGEMENT TECHNIQUES FOR REFINERY WASTES

SOLID WASTE	MANAGEMENT OPTIONS
Crude oil tank bottoms	HW landfill, landfill
Leaded/unleaded tank bottoms	HW land treatment, HW landfill, landfill
API separator sludge	HW landfill, HW land treatment
Neutralized HP alkylation sludge	HW landfill, landfill
Spent filter clays	HW landfill, landfill
Cooling water sludge	HW landfill, landfill
DAF float	Hw landfill, HW land treatment
Slop oil emulsions solids	HW landfill, HW land treatment
Solids from boiler feedwater treatment	Landfill, HW landfill
Cooling tower sludge	HW landfill, landfill
Exchanger bundle cleaning sludge	HW landfill
Waste biosludge	Landfill, HW landfill, land treatment
Stormwater silt	Landfill, HW landfill
FCC catalyst fines	HW landfill, landfill
Coke fines	Landfill, HW landfill

TABLE 6:

IMPACT OF MAKEUP TREATMENT ON COOLING TOWER BLOWDOWN RATE

	Untreated makeup	Treated makeup
Recirculating water, gpm	50,000	50,000
Temp. drop, °F	30	30
Cycles of Concentration	3	10
Makeup rate, gpm	2,700	2,000
Blowdown rate, gpm	850	150

FIGURES

	Distillation	Catalytic and Hydro Cracking	Alkylation	Reforming	Coking

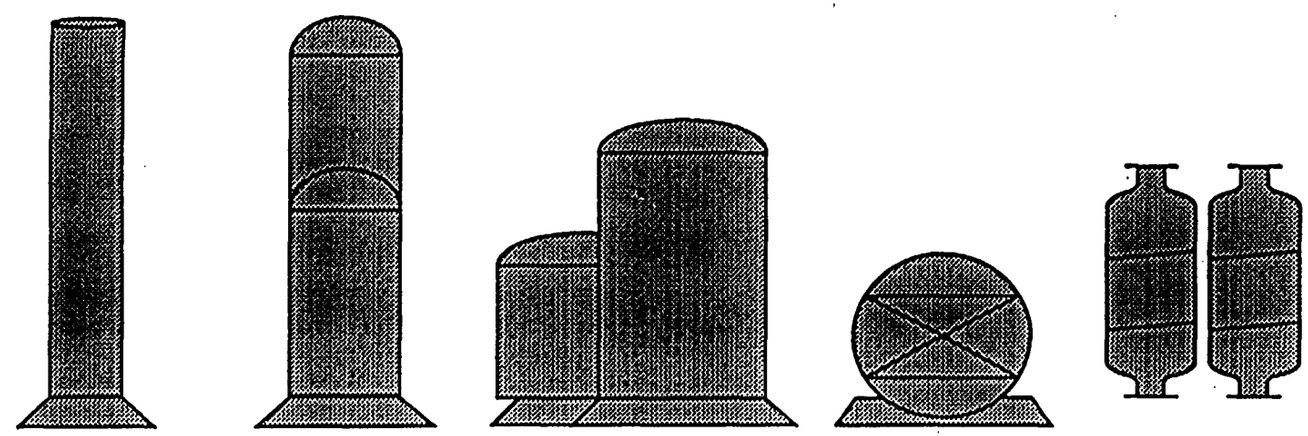

Predominant Emissions and Residuals

Ongoing:	Combustion Gases, Solids, Oil, Water	Combustion Gases, Water, VOC's	Water, VOC's	Combustion Gases, Water, VOC's	Combustion Gases, Solids, Water
Periodic:		Catalyst	Spent Acid	Catalyst	

HARZA Consulting Engineers and Scientists

Figure 1
FIVE MAJOR REFINING UNITS
INDUSTRIAL WASTEWATER DISCHARGE PREVENTION
WATER QUALITY IMPROVEMENT AND CONSERVATION PROJECT
Amman, Jordan

e:\jordan\titles.pm5

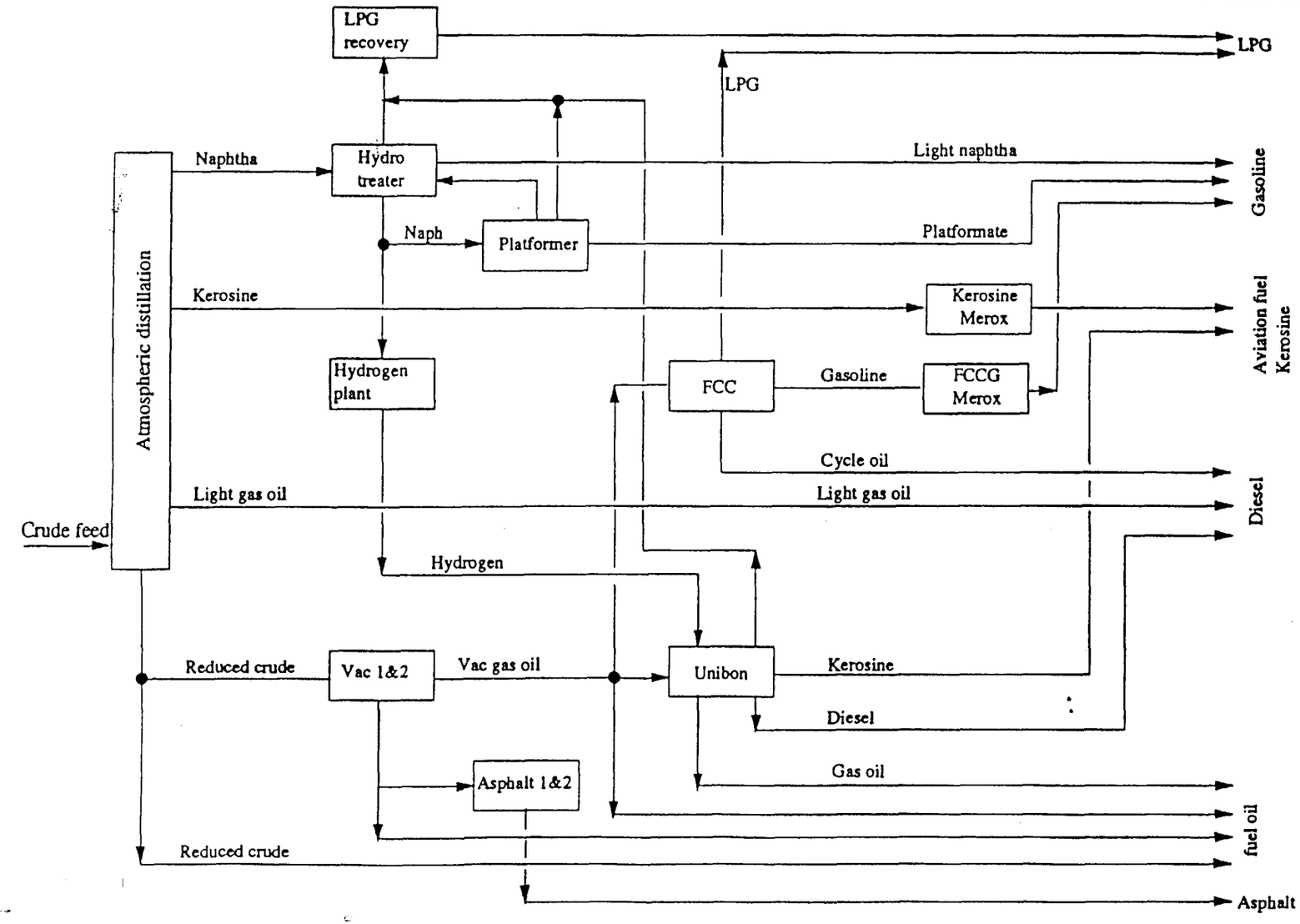

Figure 2

BLOCK FLOW DIAGRAM FOR JORDAN PETROLEUM REFINERY PROCESSES

INDUSTRIAL WASTEWATER DISCHARGE PREVENTION
WATER QUALITY IMPROVEMENT AND CONSERVATION PROJECT
Amman, Jordan

HARZA *Consulting Engineers and Scientists*

e:\jordan\titles.pm5

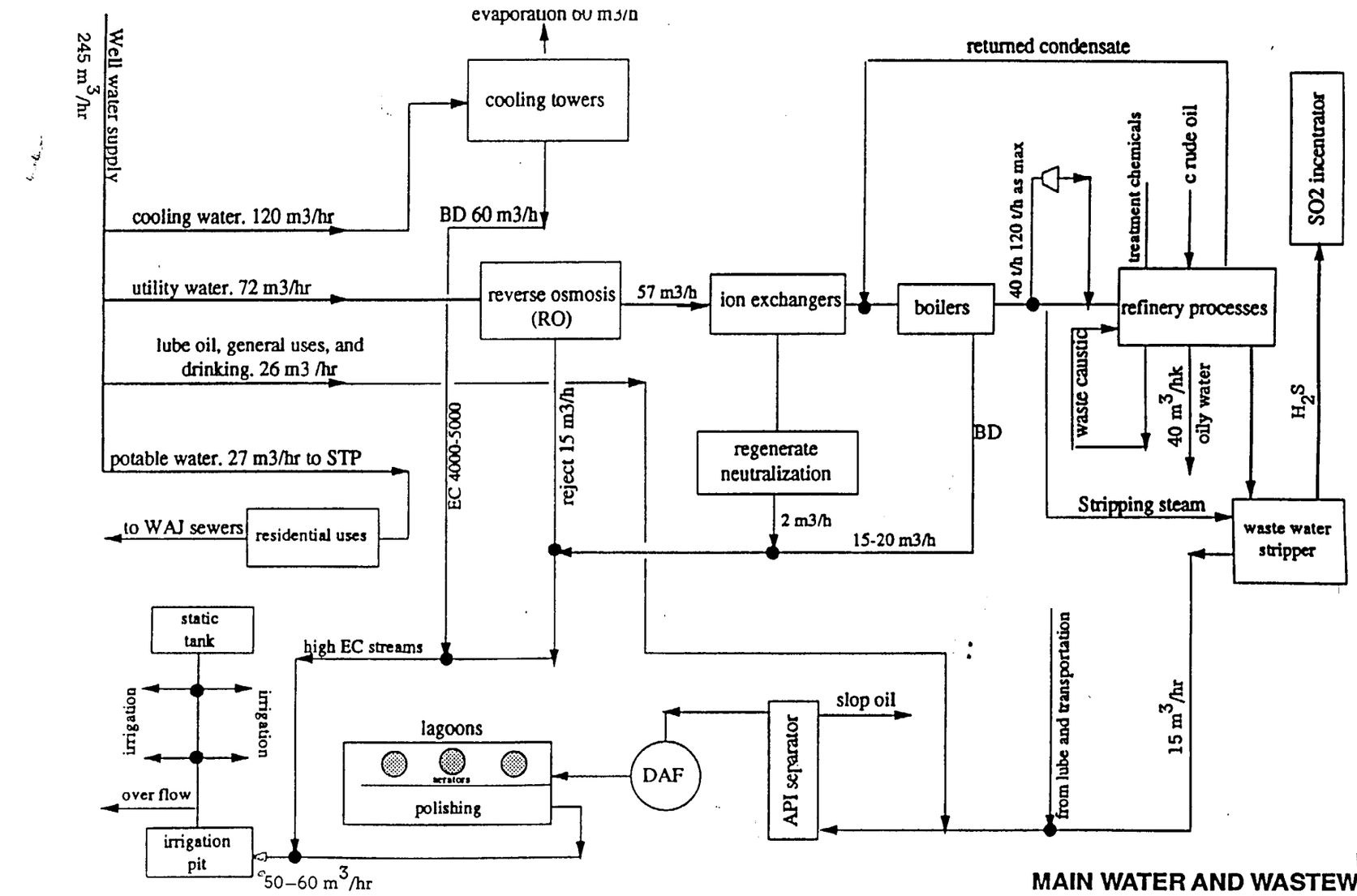

Figure 3

MAIN WATER AND WASTEWATER FLOWS AT THE REFINERY

INDUSTRIAL WASTEWATER DISCHARGE PREVENTION
WATER QUALITY IMPROVEMENT AND CONSERVATION PROJECT
Amman, Jordan

HARZA *Consulting Engineers and Scientists*

e:\jordan\titles.pm5

BETZ Handbook of Industrial Water Conditioning

Seventh Edition

1976

BETZ
TREVOSE, PENNSYLVANIA 19047

The Need for Water Reuse

32

The world's water supply consists of about 326 million cubic miles of water. Of this, over 97 percent is in the oceans, and an additional two percent is in glaciers. This leaves less than one percent of the earth's water supply in the form of ground water, rivers, lakes and streams, the normal sources for municipal, industrial and agricultural supplies.

It has been estimated that the total available water supply in the U.S. is about 650 billion gallons per day. By 1980, gross withdrawals will approach 559 billion gallons per day, of which 119 billion gallons will be for consumptive uses. Most water used is returned in the form of wastewater. However, some water is incorporated into products or evaporated, and this is reflected under consumptive uses. By the year 2000, it is estimated that our daily gross water withdrawals will exceed the total supply. Considerable reuse will undoubtedly be practiced in the not too distant future.

Purpose	1980 Gross With-drawals	Consumptive Uses	2000 Gross With-drawals	Consumptive Uses
Irrigation	167.0	104.5	184.5	126.3
Municipal	28.6	3.7	42.2	5.5
Manufacturing	101.6	8.7	229.2	20.8
Mining	2.7	0.6	3.4	0.7
Steam-Electric Power	258.9	1.7	429.4	2.9
Totals	558.8	119.2	888.7	156.2
Total Available Supply: 650 billion gallons daily				

Figure 32-1. Water withdrawals and consumptive uses (billion gallons daily).

At present, the U.S. freshwater resources exceed the total demand, but even now the distribution of water does not match the needs in some arid and heavily populated areas. As water supplies diminish and needs increase, water reuse will become more and more attractive.

Municipal wastewater is one major area of potential for water reuse. The speed with which municipal water reuse becomes a reality will depend on both economics and public acceptance. In some areas of the country, water is scarce and pumping from distant sources is not economically feasible. In many of these areas, reuse is already practiced.

Public acceptance hinges around the possibility of a health hazard caused by pathogenic bacteria and viruses found in wastewater streams. Standard practices such as chlorination can control pathogenic bacteria, but there is still much disagreement over the removal of viruses. More research is necessary to insure a minimal chance of health hazards, and then a concerted effort toward enhancing public knowledge will be required.

TREATMENT REQUIREMENTS

Some form of advanced waste treatment (AWT) is normally required to insure water of suitable quality for most forms of reuse, and a minimum of secondary treatment is always required.

Primary waste treatment normally removes up to 70 percent of the suspended solids, 30 percent of the biochemical oxygen demand (BOD) and small amounts of nitrogen and phosphorus. Secondary treatment brings the removal efficiencies of BOD and suspended solids up to 90 percent and also removes up to 50 percent of the combined nitrogen and 30 percent of the combined phosphorus.

As of 1971, only 43 percent of the nation's wastewater facilities practiced secondary treatment. Obviously, this percentage must be improved since secondary treatment is a prerequisite for reuse.

After secondary treatment, the wastewater is far from being of drinking water quality. It still contains suspended solids, colloidal solids, refractory organic compounds, nutrients (nitrogen and phosphorus), bacteria and viruses. Various forms of AWT are employed to remove these constituents. Figure 32-2 shows a typical three-stage, biological-chemical AWT plant, and figure 32-3 shows a physical-chemical AWT plant.

Suspended and colloidal solids are removed by microscreening or by coagulation, sedimentation and filtration. Phosphorus can be removed by biological uptake or chemical precipitation. Ammonia (NH_3) is removed by air stripping or oxidation and nitrate (NO_3) is removed by nitrification-denitrification. Refractory organic compounds are removed by chemical oxidation or carbon adsorption. Pathogens can be controlled by chlorination. Following chlorination, about 99.99 percent of all pathogenic bacteria will be removed.

HOW MUNICIPAL WASTEWATERS ARE REUSED

Municipal wastewaters are reclaimed either for direct or indirect reuse. Direct reuse involves recycling a treated wastewater without additional purification or dilution. Indirect reuse involves discharging a wastewater into a stream, injecting it into an aquifer or allowing it to percolate into the ground where dilution and self-purification accompanying a time lag provide further treatment before reuse.

There are five broad categories where treated municipal wastes have been reused. These are:

1) public water supply,
2) industrial,
3) groundwater recharge,
4) irrigation, and
5) recreation.

Public Water Supply. Whenever municipal reuse is mentioned, one immediately thinks either of the direct or indirect reuse of treated effluents for drinking purposes.

In 1956, Chanute, KS was in the midst of a record drought. The city's water supply reservoir was going dry, so treated effluent from the city's trickling filter plant was impounded and subsequently pumped to the reservoir before going to the water plant. This continued for five months.

Although no illness was attributed to using the wastewater, it was noted that bottled water sales flourished. This experience also pointed out that conventional secondary treatment has many shortcomings if the water is to be reused. For example, the city's water was found to increase in chlorides and organics. The chlorine demand was excessive and the water developed a pale yellow color and had an unpleasant musty taste and odor.

The city of Windhoek, South Africa is in an arid region where new water sources are scarce and would be expensive to develop. In 1968, the city opened a wastewater reclamation plant that provides up to one-third of the city's water supply. This is the first city to practice wastewater reuse for drinking purposes on a large scale.

The wastewater first undergoes conventional treatment followed by AWT. From secondary settling, a series of stabilization ponds provide about 18 days' retention. Algal growth in these ponds removes nitrogen and phosphorus to ac-

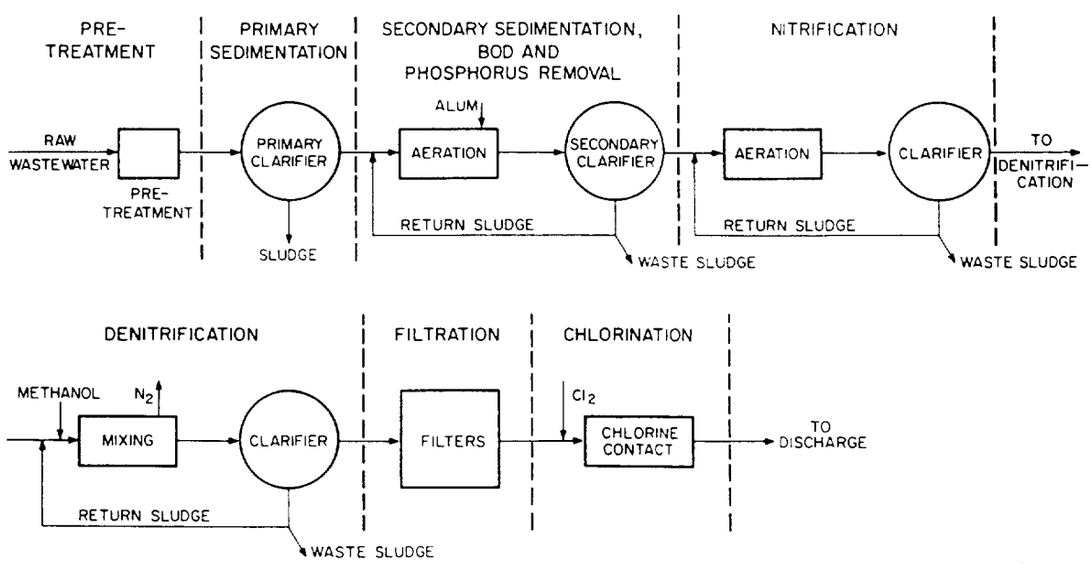

Figure 32-2. Three-stage, biological-chemical AWT plant.

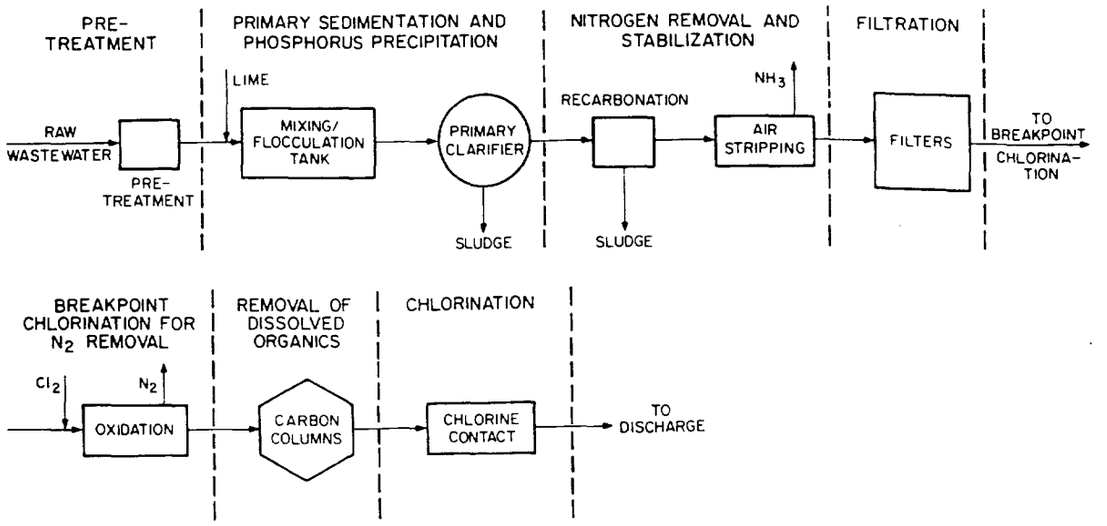

Figure 32-3. Physical-chemical AWT plant.

ceptable levels. The water pH is adjusted by recarbonation, followed by algal flotation using coagulants. Foam fractionation is next used to remove refractory organics. Lime and chlorine are then added, followed by sedimentation, rapid sand filtration and finally granular activated carbon columns. This water is then combined with treated water from the Goreangab Dam to serve as the municipal water supply.

Other reuse schemes have been proposed for municipalities. It has been suggested that dual water supply systems be used. One highly treated supply could serve households for drinking, cooking and bathing. Another system with less treatment could be used for home toilet flushing, watering lawns and washing cars. Such a system currently seems impractical due to the large expenditures needed for two separate systems.

Industrial Reuse. Many industries have found it economically advantageous to use treated municipal wastewater in their plants. Depending on the intended use, it may be necessary to provide only secondary treatment rather than AWT.

Groundwater Recharge. Groundwater recharge replenishes supplies in areas where the water table has been lowered and/or prevents salt water intrusion. It is accomplished either by injection into recharge wells or by surface spreading and percolation through the soil into the water table. The quality of the wastewater is further improved by the dilution and self-purification with time when diluted in aquifers. Also, in soil percolation, the filtering or straining by the soil serves to purify the wastewater. Normally, injection through wells requires AWT to avoid clogging the wells.

At Whittier Narrows, CA, secondary effluent is allowed to percolate through the ground into aquifers which are used for the municipal water supply. However, since no AWT is practiced, a general buildup of dissolved solids and nitrates has been observed.

At Nassau County on Long Island, NY, secondary effluent is further purified by alum coagulation and filtration, followed by activated carbon adsorption. The water is pumped through injection wells into an aquifer used for water supply. Salt water intrusion is also prevented.

Irrigation. In many countries, raw as well as treated sewage is used to irrigate crops. In the U.S., only treated effluents may be used, and normally not on crops grown for human consumption. Most of the irrigation in the U.S. is done in the West and Southwest. One problem is the accumulation of dissolved salts and pesticides in the soil and their subsequent transfer to the water. Irrigation processes include spray irrigation, rapid infiltration and overland runoff.

At Pleasanton, CA, spray irrigation with secondary effluent has been in operation for over 20 years to irrigate grasses used as a forage crop. Close monitoring has been conducted regarding bacterial removals and the possible buildup of salts in the soil. This application has been consid-

ered quite successful. Other uses include irrigation of golf courses, recreational parks and landscaping in large developments.

Recreational. One area of great potential is the reuse of water for recreational purposes. In many cases, complete AWT may not be required, and the value of the water for recreational purposes may exceed that of any other alternate use.

At Santee, CA, secondary effluent goes to a 16-acre oxidation pond, followed by soil percolation which effectively removes plant nutrients. The water is then chlorinated and pumped to a series of recreational lakes used for fishing and boating. One lake used for swimming also coagulates, filters and further disinfects the water.

Lake Tahoe, CA, operates a water reclamation plant having conventional secondary treatment followed by tertiary physical-chemical treatment. Phosphorus and nitrogen are removed by lime precipitation and air stripping, respectively. The water is then recarbonated, filtered and passed through activated carbon columns for removing soluble organics.

After disinfection, the water is pumped to Indian Creek Reservoir where it is used for irrigation and recreational purposes. This has also helped preserve Lake Tahoe itself, which is a beautifully pure, alpine lake in the Sierra Nevadas along the California-Nevada state line.

SUMMARY

Water reclamation and reuse are becoming increasingly important in our efforts to conserve water. Many arid and heavily populated areas have already surpassed the available supply of water, and new sources either are not available or are too costly to develop. Even areas with seemingly abundant water supplies may have to turn to water reuse in the near future.

Municipal water reuse is one area of major importance. Secondary treatment in most cases is inadequate, and AWT is always recommended. Municipal wastewater may be reused either directly or indirectly for domestic drinking water supplies, in industry, or for groundwater recharge, irrigation and recreational purposes.

Industrial Wastewater Reuse

33

Wastewater reuse is often the most immediate approach to water conservation and pollution control. To comply with the 1972 Federal Water Pollution Control Act goals of zero pollution discharge by 1985, water reuse is essential. Additionally, many waste streams possess better quality for reuse than many fresh water supplies.

Water reuse is a challenge to intelligent water management. Any waste stream and its contaminants must be carefully evaluated with respect to the quality of water and treatment required. Laboratory and/or pilot plant studies may prove necessary.

Many plants have practiced water reuse for years. They usually use the water for cooling tower or boiler makeup. Common sources include:

1) process waters,
2) municipal secondary treated effluent,
3) cooling tower and boiler blowdown, and
4) plant waste treatment effluent.

COOLING TOWERS

Cooling water systems are the largest users of water within industry, and consequently contribute a major portion of plant wastewater. Proper water management calls for high cycles of concentration in cooling tower systems. This can be partially achieved by simply eliminating indiscriminate blowdown to waste of recirculating cooling water used for pump gland cooling, continuous sample coolers and pad washdown water. Such waste of cooling water also increases the cost of makeup pretreatment, cooling water chemicals and waste treatment.

Cascading or reusing cooling water blowdown from one cooling tower to another can reduce wastewater and treatment costs under certain circumstances. Figure 33-1 illustrates a particular cascading blowdown system.

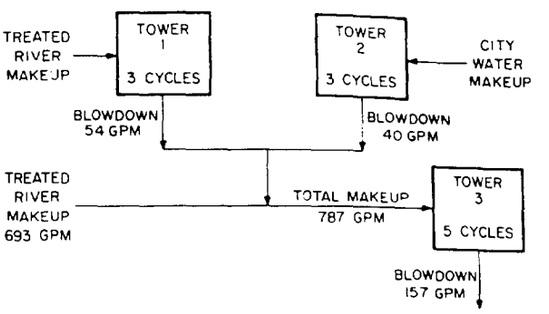

Figure 33-1. Cascading cooling tower blowdown.

With the proper pretreatment and effective recirculating water treatment and control at high cycles, cooling towers help conserve water. This is further aided by the reuse of waste streams as makeup. In addition, cooling towers can reduce the concentration of some undesirable compounds in water by direct oxidation from atmospheric oxygen or by the aerobic reduction of degradable matter by microorganisms present in the cooling water system.

BOILER WATER SYSTEMS

There are three main sources of wastewater from boiler water systems. These are pretreatment wastes, boiler blowdown and condensate losses. Excessive losses of blowdown and condensate also create energy leaks due to their lost heat value.

Chemical shortages together with discharge volumes have prompted the reuse of ion exchange regenerants and rinse waters. The highly contaminated or first portions of acid or caustic regeneration steps are discarded. However, the latter stages are often saved for reuse in the next regeneration step or for waste treatment pH control. Sometimes, the initial phases of the rinse step contain sufficiently pure acid or caustic for reuse during the next regeneration. Control is needed to prevent scaling, e.g., calcium sulfate

Since high-pressure boiler blowdown is generally low in solids, it is often reused as feedwater to lower-pressure boiler systems. Normally, the primary purpose of this reuse is to recover the heat from this high-temperature blowdown water with resultant fuel savings. Most plants have instituted programs to recover as much steam condensate as possible to recover the available heat and conserve fresh water.

REUSE OF PROCESS WATERS

Most industries require large quantities of water for process use. The metals, pulp and paper, chemical and petroleum industries are among the leading water-consumers. These industries are making important progress in cleaning up their process waters to reuse within the plant.

Examples of the reuse streams include:

1) ammonia plant process condensate,
2) chemical plant process condensate,
3) refinery sour water stripper bottoms,
4) paper mill process water, and
5) steel mill wastewaters.

Ammonia Plant Process Condensate. Excess steam is used in the primary reformer of an ammonia plant to prevent the formation of carbon on the reforming catalyst. Unreacted steam is condensed and removed from the process prior to the carbon dioxide (CO_2) removal system. This condensate is laden with ammonia, CO_2, methanol and trace metals. A typical analysis of this condensate is:

1) NH_3 = 400-1000 ppm
2) CO_2 = 800-2000 ppm
3) methanol = 1000-3000 ppm
4) organics = 30-50 ppm
5) traces of Na, Fe, Ca, Cu, SiO_2

Several ammonia producers have suggested reuse alternatives for this condensate. They generally include cooling or boiler makeup. Biological growths and fouling resulting from the ammonia and methanol nutrients normally eliminate the use of this ammonia process condensate as cooling tower makeup.

Another approach is direct reuse as boiler feedwater. However, this can cause problems in steam condensate systems with corrosion of copper alloys or ammonium bicarbonate deposits.

By steam-stripping this condensate, its quality can be improved for use as boiler makeup. The contaminants are generally reduced to:

1) NH_3 = 20 ppm
2) CO_2 = 40 ppm
3) methanol = 10-100 ppm
4) organics = 10-30 ppm
5) trace metals

The steam-stripped condensate is typically passed through demineralizers to remove the last traces of ammonia, CO_2 and metals; methanol is unaffected by the demineralizer and remains in the condensate.

Some plants process this condensate through a separate high-temperature (175F), weak-acid cation unit, followed by degasification for CO_2 removal, and a mixed bed unit to retain much of its heat for boiler feedwater. In addition to conserving energy and water by the reuse of steam-stripped ammonia process condensate, a plant will also save regeneration chemicals due to the low solids content of this condensate as boiler feedwater.

Chemical Plant Process Condensate. Several chemical plants have evaluated process waters as cooling water makeup. These streams are most often contaminated with soluble organic matter as compared to inorganic salts. The organic material can lead to biological fouling, foaming, destruction of chromate corrosion inhibitors, pitting and gummy deposits.

Each application should be studied individually to assess the nature of both the contaminants and related problems. Frequently, the organics will be volatilized across the tower and rendered harmless. If chromate inhibitors are reduced to ineffective chromium sludge, nonchromate inhibitor programs may solve the corrosion problem. And where needed, antifoams and nonoxidizing biocides will usually suppress foaming and microbiological fouling.

Another possible effect of such water reuse is the biological oxidation of the organic matter within the cooling tower. This reduces the loading on the secondary waste treatment plant as well as conserves fresh water.

Refinery Sour Water Stripper Bottoms. Sour water strippers remove hydrogen sulfide, ammonia and phenols from refinery foul process

42

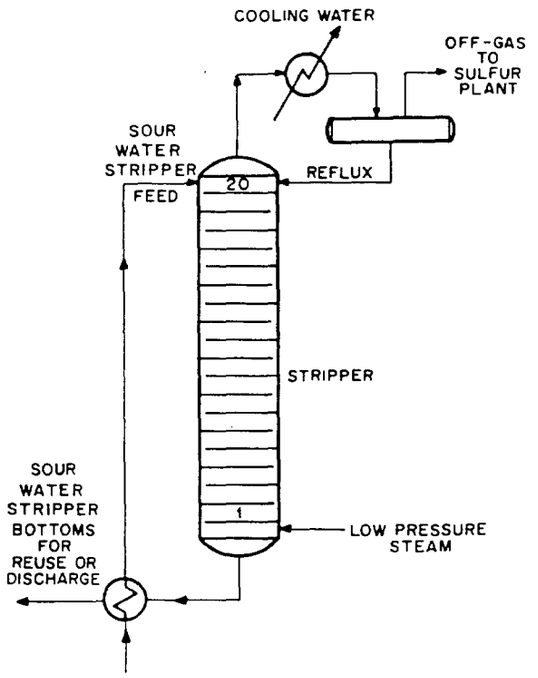

Figure 33-2. Typical sour water stripper.

waters before discharge or reuse. Typical performance is 95 to 99.9 percent sulfide removal, 70 to 98 percent ammonia removal, and 30 to 60 percent phenol removal. Except for the remaining phenol, oil, cyanide and ammonia, the stripper bottoms are essentially distilled water, and therefore are often considered for reuse. Figure 33-2 depicts the flow configuration for a typical sour water stripper.

Four common reuse practices for sour water stripper bottoms (SWSB) are for desalter water, process washwater, cooling tower makeup or boiler makeup water. Such reuse possibilities reduce fresh water needs and remove up to 98 percent of the refinery effluent's phenol content. This greatly reduces effluent biochemical oxygen demand (BOD), chemical oxygen demand (COD) and total organic carbon (TOC).

Since stripper bottoms contain only minor amounts of dissolved gases and virtually no dissolved solids, it is ideal desalter water if properly stripped of hydrogen sulfide and ammonia. Most of the phenolic compounds are usually absorbed into the crude within the desalter.

Poor stripping efficiency will adversely affect the desalter operation. High concentrations of ammonia can elevate the pH too much or stabilize the desalter emulsion.

Refineries frequently use SWSB as process washwater in overhead condensers of crude units and catalytic cracking main columns to control solids buildup. Most of the phenols are absorbed into the hydrocarbon phase. Sometimes this washwater is subsequently sent to the desalter for more phenol extraction. The ammonia in the washwater may neutralize some acids in crude unit overhead condensers.

Bio-oxidation across a cooling tower is another proven method of phenol removal. However, the stripping efficiency for sulfide and ammonia removal is critical to the reuse of this stream as cooling tower makeup.

Sulfides apparently kill the better phenol-oxidizing microorganisms. Also, hydrogen sulfide is corrosive to cooling water equipment, reduces chromate inhibitors to ineffective chromic oxide sludge and causes an odor. Therefore, when sulfide levels exceed two parts per million (ppm) in the SWSB, the water should be diverted from the cooling system.

Phenol removal depends on the biological control program. Chlorine injection rates must be carefully controlled to allow efficient oxidation of phenols and yet prevent slime growths. Care must be taken to minimize the formation of chlorinated phenols and chloramines. These can be avoided by the proper use of non-oxidizing biocides.

The ammonia content of sour water stripper bottoms is also important to the program. Ammonia fluctuations can cause uncontrolled pH within the cooling system. Ammonia is also corrosive to copper alloys, and as a nutrient, it contributes to biological fouling.

The problems related to inconsistent stripper operation indicate the need for continuous monitoring of both the stripper bottoms and cooling water. During upset conditions, the SWSB should be diverted away from the cooling tower to a holding pond, or directly to waste-treating facilities.

Possible reuse of sour water stripper bottoms as boiler makeup depends on the external treatment. In lime softeners, sulfides will be oxidized and precipitated. In hot process softeners, some ammonia will also be removed by steam or air stripping.

Ammonia and phenols can be removed by strong cation and weak-base ion exchange. However, regeneration wastes would normally require removal of these pollutants. SWSB need

very little, if any, hardness and silica removal. Thus, ion exchange costs may be slightly reduced. Care must be taken to avoid resin fouling by oil.

Any remaining contaminants can create boiler problems. Sulfides can cause both corrosion and deposition within a boiler. Iron sulfide and other compounds can reduce heat transfer as well as cause under-deposit corrosion attack. Ammonia can unite with carbon dioxide to give ammonium bicarbonate deposits as well as corrode copper equipment in the condensate system. Oil can cause boiler water foaming and solids carryover.

Paper Mill Process Water. Because the pulp and paper industry generally recycles process waters, the economic advantages of fiber, filler and chemical savings, heat recovery, water conservation and pollution control can be derived.

A few waste paperboard mills have completely closed their water system, but for various reasons peculiar to the paper produced, most mills cannot. While a completely closed system provides many advantages for a mill, a high water recirculation rate may create a tendency for scaling, corrosion, foaming and slime deposits. The most important factor dictating the amount of allowable process water recycling is product quality. Bleached and unbleached kraft products provide a good comparison of the amount of recycling that can be practiced.

Spent process waters from the manufacture of bleached kraft pulp products (mostly linerboard) can be reused in the process after they are passed through a vacuum filter. Because dispersants and other additives are not completely removed by the usual clarification processes, bleached kraft mills cannot normally return machine white water to pulping or bleaching operations. Due to the differing quality of water needed for these processes, bleached fine paper mills often use 30,000 to 40,000 gallons of water per ton of paper produced; unbleached kraft mills use 10,000 to 15,000 gallons of water per ton.

The possibility of recycling more process water depends on the degree of external water treatment to remove contaminants before they can enter the process. This includes the removal of color, BOD, COD, dissolved organics and inorganic salts such as chlorides. To achieve this removal many paper mills may have to install capital equipment including clarifiers, bio-oxidation units, and carbon adsorption, ion exchange or reverse osmosis units.

Steel Mill Wastewaters. Large volumes of wastewater are produced at practically every stage in the steelmaking process. These are generally classified according to the principal waste they contain: coke plant wastes, gas-washer wastes, scale-bearing wastes, acid wastes, oil-bearing wastes and sinter plant wastes. Formerly, most of this wastewater was dumped into the nearest stream after one trip through the mill. Now, most of it is treated, and reused, or discharged as clean water.

Coke plant scrubber waters are very dirty. Two primary ways of handling this wastewater are air flotation and gravity sedimentation. With air flotation, specially formulated frothing agents help froth flotation units remove fine particulate matter collected in gas scrubbing systems. Waste treatment, together with deposit control agents and antifoams, permits further recycling and closing up of the wet scrubber systems.

Many other gas-washer wastes originate in the wet scrubbing of blast furnace gas, basic oxygen furnace (BOF) off gas, electric furnace and open hearth emissions, and sinter plant operations. The most common method of treating gas-washer wastes and closing up the system is gravity sedimentation in thickeners. Normally, polyelectrolytes are applied to improve settling rates and minimize suspended solids carryover. Figure 33-3 shows a closed blast furnace wet scrubber system.

Most of the scale-bearing wastewater in the iron and steel industry comes out of blooming mills, slabbing mills, hot strip mills, pipe mills and continuous casting operations. The main source is hot rolling, which produces iron oxide scale.

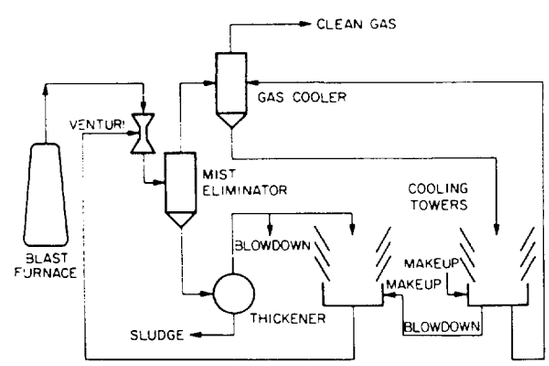

Figure 33-3. Closed blast furnace wet scrubber system.

makeup that has been given the additional treatment step of demineralization or dissolved solids removal.

SIDESTREAM TREATMENT OF COOLING AND BOILER WATER BLOWDOWN

Sidestream treatment of recirculating cooling water is a means to conserve water by blowdown recovery. The purpose is to reduce the parameters limiting the tower cycles.

Some plants use lime-soda softening of cooling tower blowdown to reduce the calcium, magnesium, bicarbonate and silica concentrations. By drawing the blowdown from the warm return line, the plant can take advantage of improved hardness and silica removal at the higher temperatures. One Southwestern gas plant combines boiler blowdown with cooling tower blowdown to further enhance the softening reactions at the higher temperature. Figure 33-5 is a schematic diagram of such a system.

When not using warm softeners, some plants combine the blowdown with fresh makeup water in the primary lime-soda softener. This approach is generally more acceptable when the makeup water hardness is present as calcium or magnesium bicarbonate. Otherwise, high chloride and sulfate solids develop, creating a corrosive environment in the cooling system.

The lime requirements for softening are generally about 30 percent above theoretical. This is attributed to interfering ions and the use of deposit control agents in the cooling systems competing to hold calcium in solution.

Chromate inhibitors return to the system through the softener. Most other inhibitors and deposit control constituents are removed in the softener and their feed must be supplemented.

PLANT EFFLUENT WATER

Some plants reuse effluent water after partial or complete waste treatment to conserve water and to improve discharge quality. For years, one refinery has charged API separator effluent to its cooling towers for bio-oxidation of phenols. The wastewaters include effluent from the sour water stripper, other process condensates, pump gland and miscellaneous drainage, all storm water drainage, tank bottoms, crude desalting water, boiler blowdown water, water plant backwash and rinse water. Oil removal in the treatment system is usually 99.9 percent.

The overall phenol reduction within the towers and API separators is also 99.9 percent, with resultant BOD, COD and TOC losses greater than 90 percent.

The bio-oxidation tower blowdown is sent to a final API separator, then to a single pass induced draft cooling tower for cooling and aeration and through final upflow filters. Figure 33-6 illustrates the wastewater flow for this tower bio-oxidation system.

As a result of this water conservation, this refinery has a fresh water demand of 55 gallons per barrel of crude processed vs. a national refinery average of 2150 gallons per barrel of crude discharge.

Another oil refinery also uses a cooling tower for water reuse and waste treatment control.

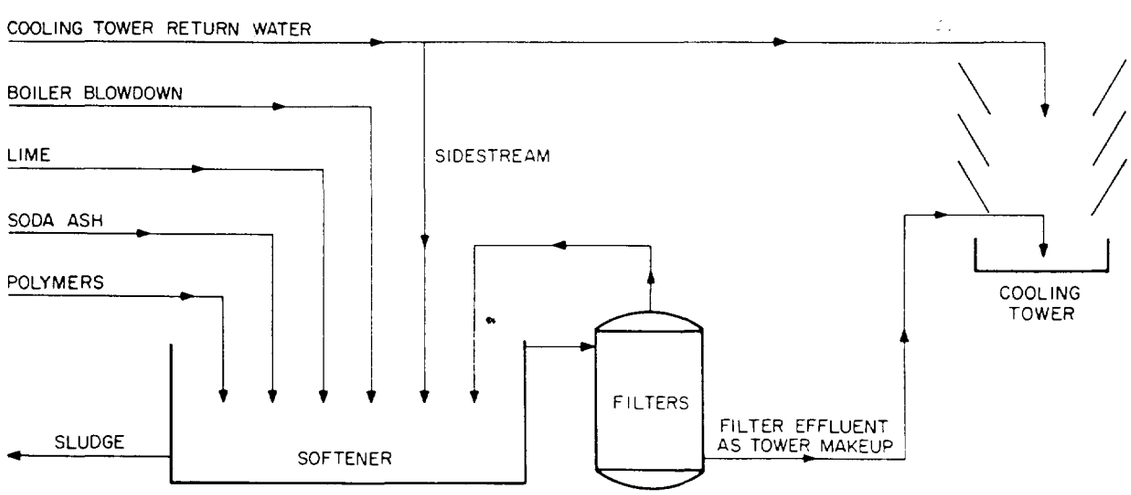

Figure 33-5. Schematic diagram of sidestream treatment.

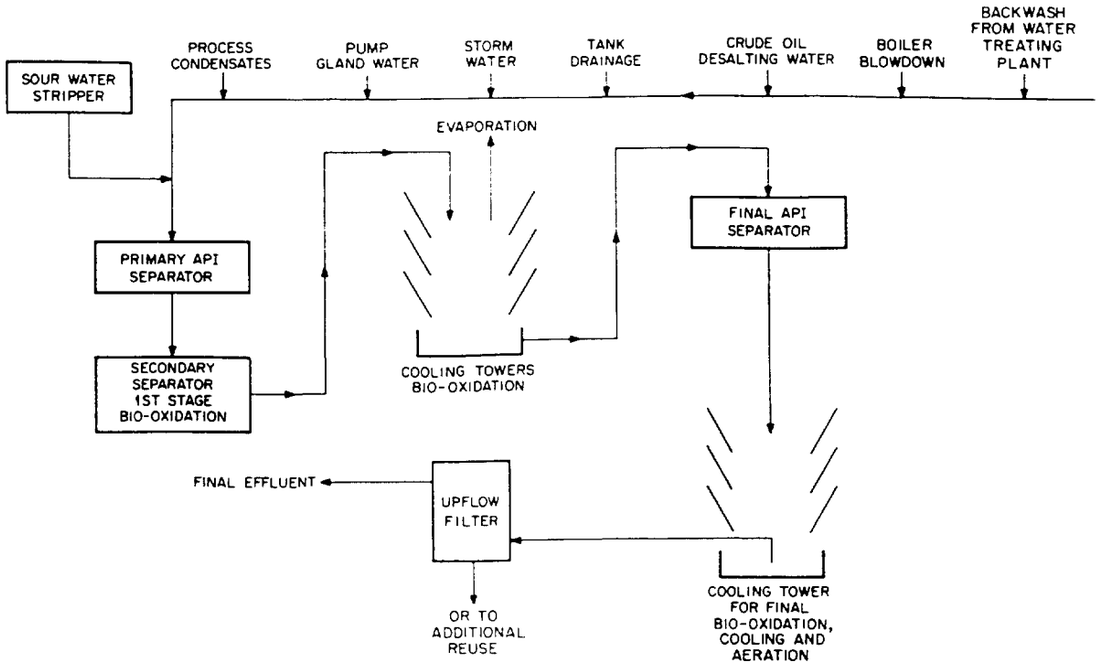

Figure 33-6. Cooling towers as wastewater bio-oxidation.

They first send their stripped sour water to their desalter for partial phenol reduction. They then combine the desalter water bottoms with all other wastes including boiler blowdown and route them to the API separator for primary oil removal. This effluent goes to a dissolved air flotation (DAF) unit for more oil and suspended solids removal.

The DAF effluent contains less solids than the available fresh water supply. Therefore, the plant replaced fresh water with this effluent for cooling tower makeup and increased cycles.

The tower microorganism population provided aerobic reduction of phenols and other degradable matter. This reduced the effluent organic carbon and oxygen demand, and decreased the combined discharge volume from the DAF unit and cooling tower by 90 percent.

One petrochemical plant reuses final effluent after activated sludge treatment and clarification as 100 percent makeup to its cooling towers. The cooling towers operate at five cycles of concentration. The circulating water contains 300 ppm chloride, 10 to 50 ppm ammonia, 1500 ppm sulfates, and low BOD of 5 ppm. There has been some microbiological fouling and foaming caused by organics, but cooling service has been good.

Special Industrial Processes

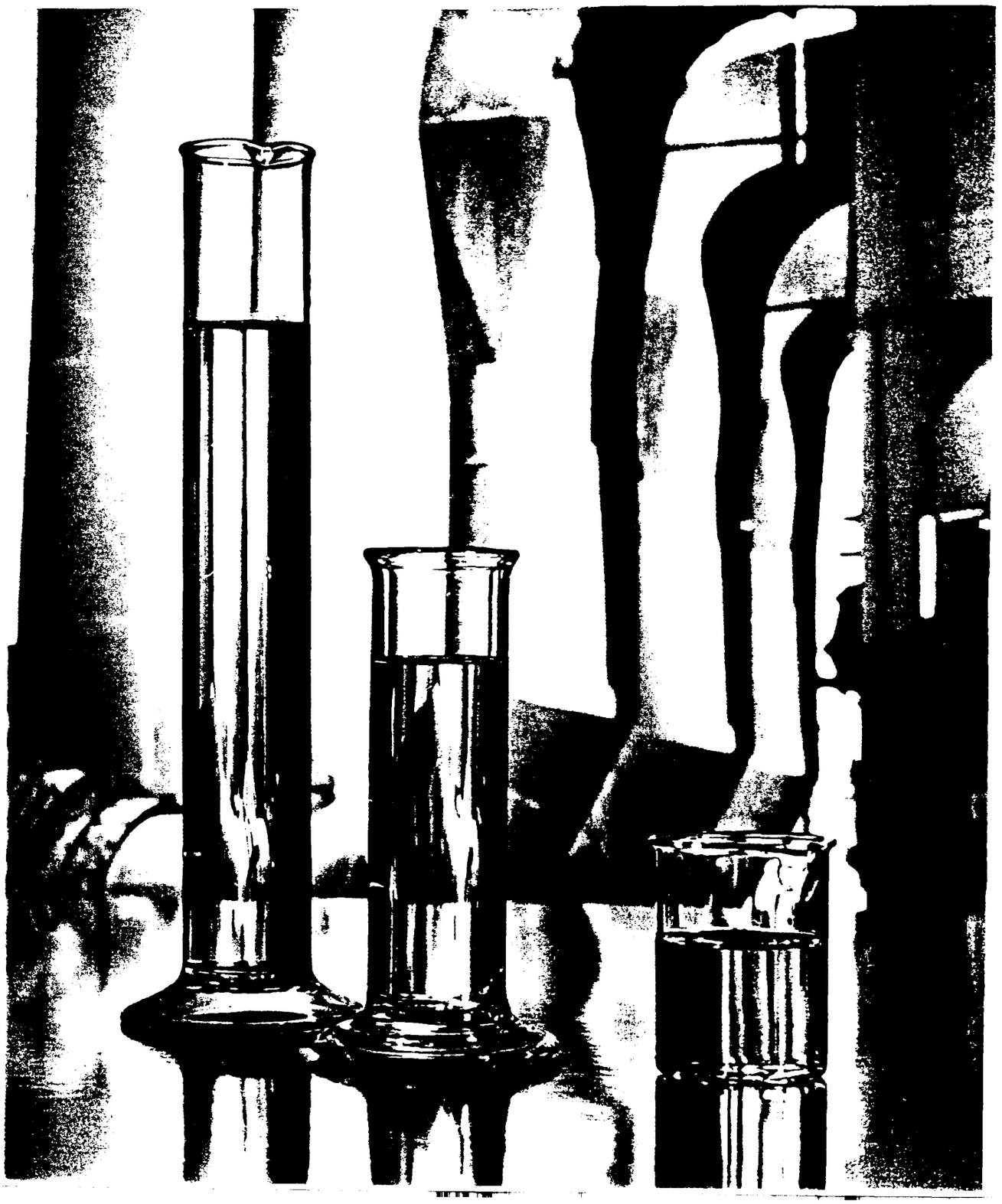

53

Table 48.1
Specific quantity of contaminated wastewaters from petroleum refineries of various types

Type of refinery	Average specific quantity of wastewater, m³ per 1 ton of crude							
	total for plant	oil-containing neutral	oil-and-salt-containing	sulfurous alkaline	paraffin-containing acidic	carbamide	other, containing organic substances	containing ethylated gasoline
Fuel plant with inextensive refining of the crude	1,25 1 0,4	0,72 0,58 0,26	0,52 0,413 0,135	0,008 0,005 0,003	— — —	— — —	0,001 0,001 0,001	0,001 0,001 0,001
Fuel plant with extensive refining of the crude	1,53 1,15 0,5	0,72 0,72 0,31	0,52 0,408 0,172	0,008 0,005 0,003	0,252 — —	0,022 0,011 0,011	0,007 0,005 0,003	0,001 0,001 0,001
Fuel-oil plant with inextensive refining of the crude	1,3 1,1 0,45	0,77 0,68 0,29	0,515 0,41 0,154	0,008 0,005 0,003	— — —	— — —	0,007 0,005 0,003	— — —
Fuel-oil plant with extensive refining of the crude	1,82 1,5 0,55	0,9 0,9 0,33	0,63 0,567 0,203	0,008 0,005 0,003	0,252 — —	0,022 0,022 0,011	0,008 0,006 0,003	— — —
Fuel-petrochemical plant with extensive refining of the crude	2,38 2,2 0,6	1,35 1,46 0,37	0,74 0,706 0,212	0,008 0,005 0,003	0,252 — —	0,022 0,022 0,011	0,007 0,006 0,003	0,001 0,001 0,001

Notes: 1. Specific quantities of wastewaters indicated: in top line for modern operating plants, in middle line according to COMECON standards, in bottom line for planned refineries characterized by extensive adoption of air cooling equipment and nproved industrial processes.
2. Specific quantities of individual types of wastewater are approximate.
3. Quantity of blowoff water from recycled water systems is included in specific quantity of water discharged.

At petroleum oil plants there is equipment for contact purification and vacuum distillation of oils and production of additives for them.

At plants of the petrochemical type, ethylene and propylene are produced by pyrolysis of gasoline raffinates and butyl alcohols, as well as polymerization and hydrogen systems. Certain plants produce sulfuric acid. Ethyl blender units, improving the quality of gasoline, are provided at many refineries.

Certain petrochemical products may also be produced at separate plants from feedstocks supplied by refineries.

The quantity of crude refined by individual plants comprises 3 -12 million tons or more per year.

The average specific quantities of contaminated wastewaters per 1 ton of crude by plant type are presented in Table 48.1. The data from this table can be used for technical-economic evaluation of wastewater management systems for industrial complexes with petroleum refineries. For more detailed development of design projects, data on the quantity of refinery wastewaters are provided by the technological organizations of the appropriate industries.

The flow rates of water in the recycled water system of petroleum refineries exceeds the flows of wastewaters by 10-20 times (the lower value for refineries with extensive refining of the crude).

The recycled waters may contain: 25-30 mg/*l* petroleum products, 25 mg/*l* suspended matter; 500 mg/*l* sulfates (130 mg/*l* in the make-up water), 300 mg/*l* chlorides (50 mg/*l* in the make-up), 25 mg/*l* BOD_{tot} (10 mg/*l* in the make-up);

Table 48.2
Characteristics of contaminated wastewaters from principal technological divisions of a refinery

No.	Type of technological equipment or process	Contaminant concentration, mg/l: crude and petroleum products	suspended matter	other substances: type	other substances: value	COD, mg/l	BOD_{tot}, mg/l
1	Electrical desalination and atomospheric pipe unit or a combined unit:						
	neutral petroleum-containing waters	5000/350	250/120	Chlorides	3000/1200	600/500	300/250
				Phenols	8/5		
				Surfactants	15/10		
	petroleum-containing waters	15 000/5000	350/150	Chlorides	15000/6000	2200/900	1100/500
				Phenols	5/4		
				Surfactants	120/90		
2	Catalytic or thermal cracking	300	400	Trisodium phosphate	5000	750	400
3	Catalytic reforming	300	70	—	—	700	350
4	Secondary distillation of gasoline	250	60	—	—	450	250
5	Sulfur production (with regeneration of monoethanolamine)	50	150	Monoethanolamine	10	300	100
6	Carbamide deparaffinization of diesel fuel	500/400	120/120	Carbamide	1500/850	1040/950	840/550
				Ammonia nitrogen	150/100		
				Dichloromethane	15/10		
7	Bitumen	1500	100	—	—	900	450
8	Gas fractionating (GPU)	100	70	—	—	150	70
9	Sulfuric acid aluminizing of petroleum products	150	60	—	—	350	150
10	Aromatic hydrocarbons (for example ethylbenzene)	200	60	Sodium chloride	To 40 000	500	350
				Caustic soda	To 30 000		
				Hydrochloric acid	18 000		
				pH	4.1		
				$Al(OH)_3$	5000		
				Benzene, ethylbenzene	500—800		
				Toluene	200		
11	Isomerization of benzine fractions	150	60	—	—	450	220
12	Selective purification of oils or oil purification with furfural	150	70	Furfural	5	300	140
13	Vacuum distillation and oil hydrorefining	150	40	—	—	450	200
14	Hydrorefining of solid paraffins	200	70	—	—	450	250
15	Continuous coking	400	300	Hydrogen sulfide	To 5	650	350
16	Hydrogen production	—	30	—	—	50	20
17	Ethyl blender	70	60	Tetraethyl lead	To 100	130	65
18	Ethylene production	250/150	100/80	Aromatic hydrocarbons	30	700/500	350/250
19	Propylene production	50/30	80/50	—	—	500/400	200/150

55

Table 48.2 (continued)

No.	Type of technological equipment or process	Contaminant concentration, mg/l: crude and petroleum products	suspended matter	other substances: type	other substances: value	COD, mg/l	BOD_{tot}, mg/l
20	Butyl alcohol production	—	60	Butyl alcohol Butyric aldehyde	30 000 15 000	For content of alcohols and aldehydes	
				Toluene	200		
21	Synthetic aliphatic acid (SAA) production	—	400/200	Paraffin	250/150	9000/5500	7000/4000
				Aliphatic acids	150/100		
				Sulfates	2000/800		
				pH	3/4		
				Surfactants	25/20		

Note. Content of contaminants in wastewater for technological systems of planned refineries given under the line, and for modern operating refineries above the line.

the temporary carbonate hardness should not exceed 5 mg-eq/*l* (2.5 mg-eq/*l* in the make-up water).

The approximate concentration of contaminants in the wastewaters of the principal technologial equipment at petroleum refineries is presented in Table 48.2 (with consideration of the data of the Neftekhim All-Union Association and the VODGEO Research Institute).

In the refining of high sulfur content crudes and in the purification of petroleum products with alkali (alkalization), a number of systems (no. 1, 2, 8, 9 and 13 in Table 48.2) also produce concentrated sulfurous alkaline wastewaters, characterized by a content of: 3000-4000 mg/*l* petroleum products, 25,000-30,0000 mg/*l* sulfides and sulfohydrates, 12,000-15,000 mg/*l* caustic soda, 5000-8000 mg/*l* phenols at COD = 85,000-100,000 mg/*l* and BOD_{tot} = = 50,000-70,000 mg/*l*, and pH to 14.

Certain systems also produce water vapor condensates, contaminated during the refining of sulfur crudes by sulfides (1000-4500 mg/*l* or more), phenols (300-450 mg/*l*) at pH = 7.5-8, with an ammonia nitrogen concentration of 4000-4500 mg/*l* and BOD_{tot} = 300-7000 mg/*l*.

Certain refineries are equipped with catalyst plants where mother liquors are produced. Depending on the type of catalyst used, the liquors contain to 80-90 g/*l* ammonium sulfate, to 85-100 g/*l* sodium nitrate and sulfate and to 1 g/*l* nitric acid. Certain refineries may have a sulfuric acid division, and sulfuric acid may be present in the wastewaters from this division when there are problems with equipment.

48.1.2. Industrial wastewater management systems

Oil refineries have two main industrial wastewater systems:

1) For removal and treatment of neutral petroleum-containing industrial wastewaters and industrial stormwater. The first system is intended for wastewaters from the majority of technological processes; from the contact condensers and scrubbers (except for the barometric condensers on atmospheric vacuum pipe stills), from the drainage devices of equipment, pumps and reservoirs (excluding feedstock reservoirs), from the cooling of pump packing glands, from the washing of petroleum products (when the alkali concentration in the water is low), and from washing of floors, as well as stormwater from plant sites and tank farms. After treatment the wastewaters from the first system are generally utilized for industrial water supply (make-up for recycled water systems and for individual water users). The total salt concentration of these waters does not exceed 2000 mg/*l*;

2) For removal and treatment of industrial wastewaters containing petroleum, petroleum products and petroleum emulsions, salts, reagents and other organic and inorganic substances. Depending on the type and concentration of the contaminants, the second system can include the following separate networks:

- petroleum-containing water from crude preparation equipment, separation water from the crude tank farms, drain scaffolds and the industrial steaming stations;
- concentrated sulfurous-alkaline waters (solutions from the alkalization of petroleum products, sulfurous-alkaline condensates);
- wastewaters from the production of synthetic aliphatic acids (SAA), containing paraffin, organic acids and other substances;
- wastewaters from petrochemical plants (for example ethylene, propylene, butyl alcohol plants), contaminated by dissolved organic substances;
- wastewaters containing tetraethyl lead from ethyl blending units and other equipment where ethylated benzine is used;
- acidic wastewaters contaminated by mineral acids and salts.

The separate networks may not be present, for example at a plant where there are no facilities discharging the appropriate types of wastewater or where combined discharge of the wastewaters is adopted. In particular, it is allowed to add wastewaters from the production of SAA or petrochemical wastewaters to the network for petroleum-containing wastewaters after local treatment.

Salt-containing wastewaters in the second system are usually discharged to a water body after treatment. There are frequent cases of utilization of these effluents, and with proper substantiation they may be desalinated and recycled to the industry.

When designing wastewater management systems for petroleum refineries, the VNTP-25-78 technical design standards, approved by Minneftekhimprom in 1979, should be considered.

48.1.3. Local treatment of wastewaters

Before general-purpose mechanical and biochemical treatment, certain types of wastewater are locally treated.

When it is not possible to transfer them for industrial utilization by another plant (for example a tannery or pulp plant), the concentrated sulfurous-alkaline effluents are equalized for concentration and quantity of water and sedimented to remove sludge and floating petroleum products in control reservoirs. Then, together with the wastewater in the second system, they can go to biochemical treatment when the concentration of sulfides in the mixed effluent does not exceed the allowable value (see below). If this specification cannot be met, then the sulfurous-alkaline effluents go to equipment for regeneration of alkali, which is the optimal solution with regard to the protection of water bodies from contamination, or they are treated by destruction of the sulfurous compounds followed by biochemical treatment together with other wastewaters.

The volume of the equalization basin-control tank is determined by the duration of the water quantity variation cycle and the contaminant concentration cycle and is chosen for a 3-hour inflow of the sulfurous-alkaline wastewaters. The oil separator should have two sections with a design water retention time of 2 hr.

When destructive methods are used to remove sulfides and sulfohydrates from the sulfurous-alkaline waters, the wastewaters are preacidified with exhaust gas carbon dioxide (carbonized) or with technical carbon dioxide. Sulfuric acid can be used for the same purpose, preferably in the form of spent liquors.

When exhaust gases are used, they pass through a series of preparatory operations: cooling, adsorption of the carbon dioxide by monoethanolamine (MEA), condensation, etc. The exhaust gases are supplied together with steam (pressure 0.12 MPa) to a deodorizing colum, a carbonizer irrigated by wastewater. The column is made of steel with an anticorrosion surface and equipped with perforated ring and plate packing. The irrigation density is 8-10 $m^3/m^2 \cdot hr$. The height of the column is 8-9 m, the packing depth 5-6 m.

In the reaction of the sulfurous compounds with carbon dioxide, hydrogen sulfide is liberated:

$$\left.\begin{aligned} Na_2S + CO_2 + H_2O &= Na_2CO_3 + H_2S; \\ 2NaHS + CO_2 + H_2O &= Na_2CO_3 + 2H_2S. \end{aligned}\right\} \quad (48.1)$$

Part of the carbon dioxide decomposes on neutralization by the alkali:

$$2NaOH + CO_2 = Na_2CO_3 + H_2O. \quad (48.2)$$

In the treatment process sulfurous compounds are 97-98% removed, phenols 70-75%. The electrical energy consumption is 40 kWh, and the steam consumption 200 kg/m^3 of wastewater.

The design volume of the exhaust gases is determined under the assumption that they contain not less than 8 vol.% carbon dioxide, and the required quantity of CO_2 is taken with a safety factor of 3-4 in relation to the stoichiometric requirement.

When it is used to treat the water, the sulfuric acid enters the mixer with the wastewater with air bubbled in at 2-3 m^3/m^3 of wastewater. Then the wastewater goes to a deodorizing column charged with acid-resistant Raschig rings and ventilated with air. The irrigation density is 25-30 $m^3/m^2 \cdot hr$, the air flow 10-12 m^3/m^3 of water.

The required quantity of sulfuric acid is determined using the following reactions (with a 20% safety factor):

$$\left.\begin{aligned} Na_2S + H_2SO_4 &= Na_2SO_4 + H_2S; \\ 2NaHS + H_2SO_4 &= Na_2SO_4 + H_2S; \\ 2NaOH + H_2SO_4 &= Na_2SO_4 + 2H_2O. \end{aligned}\right\} \qquad (48.3)$$

In all cases the hydrogen sulfide which is blown off is burned if it cannot be used for production of sulfuric acid. More detailed information on the design of deodorizing units for wastewaters containing sulfurous compounds is presented in paragraph 20.2.

In alkali regeneration, soda ash which is produced in the destruction of the sulfides by carbon dioxide (carbonization) can be used as a raw material for the production of caustic soda solution. The technology for this process requires some improvement, but even now its use permits a decrease in the cost of local treatment of concentrated sulfurous-alkaline waters by 90%. An electrolytic method of regeneration of the alkali, still in the stage of research and development, is also promising.

Wastewaters from the production of synthetic aliphatic acids are treated to remove naphthalene and oils and neutralized, after which they go to general-purpose biological treatment.

The water goes to a product trap, which is a horizontal settling tank, where the paraffin and oils are sedimented for 3.5-4 hr and then pumped to separation (dewatering) in separation reservoirs. The moisture of the recovered products is 90-95%.

Due to the significant gas emissions, the product trap is covered and has a gas vent pipe (see Chapter 12 for more detail). To avoid paraffin deposition on the internal wetted surface of equipment involved in the separation, pumping and preparation of the products, the wastewater is heated to 60-70°C.

The products are separated at 70-80°C for 3 hours in above-ground steel tanks (including the time for the operations of pumping the waster-containing products, discharge of the separated water and pumping the prepared products to the plant). The water separated in the reservoirs is returned to treatment.

After the product traps the water goes to an equalization basin for reducing the variations of the concentration of dissolved organic substances, designed for a 6-hour inflow, and then to a reagent mixer and contact reservoir. The time of water contact with the reagent is 30 minutes.

The reagent system of the neutralization equipment varies depending on the type of reagents used. In addition to lime, milled chalk, ammonia water, industrial alkaline wastes, etc., can be used (see Chapter 16.2 for neutralization and reagent equipment).

From the contact reservoir the wastewater goes to sludge thickeners for separation of the sludge. It is recommended that these units be of the radial type. The wastewater load is 1-2 $m^3/hr \cdot m^2$ of settling tank surface. The quantity of sludge produced is 1.3 parts by weight per part of aliphatic acids; the sludge moisture is 98-99%. The sludge is then transported to a tank, which is usually provided for other types of accumulated sludges.

After local treatment, the paraffin concentration in the wastewater is decreased to 100 mg/*l*, and the total quantity of organic substances dissolved in the water is decreased by 15-20%. Saponified impurities may be present in the water (up to 0.1%).

The wastewaters produced principally in the discharge of condensates from sulfur crude refining equipment should be rectified, or when condensate flows are small, oxidized by atmospheric oxygen with conversion of sulfides to thiosulfates followed by discharge of the water into the first system of the refinery for subsequent biochemical treatment. Here the concentration of sulfides decreases to 50 mg/*l*, and the BOD_{tot} by a factor of 2.5.

The wastewaters containing inorganic acids and salts, primarily highly concentrated mother liquors from the catalyst plants, should go to treatment for extraction of salts, which are a valuable mineral fertilizer (ammonium sulfate, sodium nitrate, etc.). The following treatment scheme is possible: the solutions are equalized, filtered to separate mechanical impurities and evaporated on 2-3 sectioned evaporators. After evaporation to a 50-75% salts concentration, the salts are crystallized in water cooled equipment and are centrifuged to separate the crystalline product. The remaining mother liquor is returned to the evaporation cycle (see Chapters 17 and 25 for crystallizers and evaporators). The wash water is discharged to the sewer.

Low-concentration wastewasters containing mineral acids and salts are usually discharged to the first system or to the storm sewers after neutralization.

Wastewaters containing toxic tetraethyl lead from the ethyl blenders and other equipment using ethylated gasoline undergo full treatment. When the extraction of tetraethyl lead is insufficient, discharge of the wastewaters to the sewer is not permitted. In one extracting method, tetraethyl lead is removed from the water by gasoline (see paragraph 18.4). The treated water goes to the second system of the refinery.

Wastewaters containing vaporizing dissolved organic substances (from the production of butyl alcohols, ethylene, propylene, etc.) at concentrations complicating biological treatment or significantly increasing its cost are treated on an evaporator column with plate packing to remove organic compounds. The temperature at the top of the column is 80-105°C, at the bottom 95-150°C, the quantity of distillate formed is 10%, and the pressure in the column is not over 0.065 MPa. The decrease in the COD value is up to 1000 mg/*l*. On sedimen-

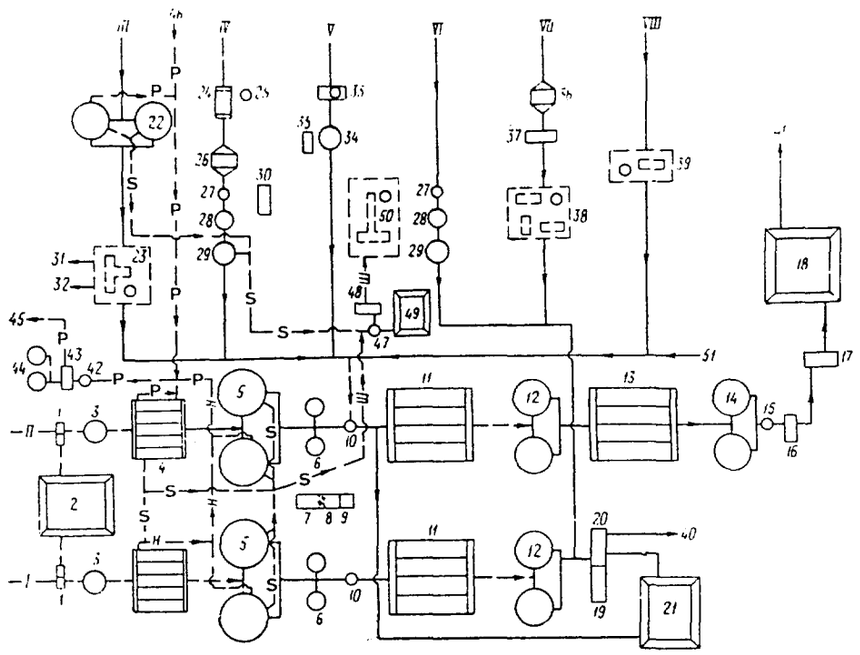

Figure 48.1. Flow chart of treatment facilities for petroleum refinery wastewaters: 1) stormwater discharge; 2) emergency pit; 3) grit chamber; 4) oil trap; 5) radial settling tank; 6) flotator; 7) recirculation pump station; 8) reagent system; 9) nutrient addition; 10) mixer; 11) aeration tank; 12) secondary settling tank; 13) stage II aeration tank; 14) tertiary settling tank; 15) receiving reservoir; 16) pump station; 17) drum screens and sand filters; 18) buffer pond; 19) air blower station; 20) circulating activated sludge and water recycling pump station; 21) emergency tank; 22) equalization basin - oil separator reservoir; 23) sulfurous liquor treatment unit; 24) product trap; 25) product preparation reservoir; 26) control tank; 27) mixer; 28) contact reservoir - neutralizer; 29) sludge thickener; 30) reagent system and pump station; 31) soda ash to utilization; 32) hydrogen sulfide to utilization; 33) evaporator column; 34) distillate separator; 35) pump distillate; 36) equalization basin; 37) filter; 38) evaporation and crystallization unit; 39) tetraethyl lead treatment unit; 40) water return to recycling system; 41) water discharge into water body or to utilization; 42) water-containing petroleum product reservoir; 43) oil pump station; 44) preparation reservoirs; 45) water-containing petroleum product return; 46) water-containing petroleum products from water recycling system petroleum separators; 47) sludge reservoir; 48) sludge pump station; 49) reserve sludge reservoir; 50) system for dewatering and incineration of petroleum sludge; 51) supply of mechanically treated sanitary wastewater. Pipes: P) petroleum products; S) sludge: I) first system. Petroleum-containing wastewaters; II) second system. Petroleum-containing wastewaters; III) concentrated sulfurous-alkaline waters; IV) wastewaters from production of synthetic aliphatic acids; V) wastewaters from petrochemical plants; VI) acidic weakly mineralized wastewaters; VII) concentrated mineralized waters from catalyst plant; VIII) wastewaters containing ethylated gasoline (facilities for treatment of the excess activated sludge are not shown).

tation the distillate separates into an aqueous layer, going to irrigation of the column, and an organic layer which is returned to the plant.

48.1.4. Mechanical treatment of wastewaters

A general-purpose treatment facility complex for petroleum refinery wastewaters includes facilities for mechanical and biochemical treatment, separate for the first and second systems, as well as equipment for separation (dewatering) of the recovered petroleum products and treatment of the petroleum sludge (common for both systems).

Depending on the standards for discharge of wastewaters into a water body, tertiary treatment of the wastewaters after biochemical treatment may also be required, and clarification on filters in the first system can be required when the wastewaters are recycled to the plant.

A flow chart of a sewage treatment facility for a petroleum refinery is presented in Figure 48.1.

The following facilities are used for mechanical treatment of the wastewaters:

1) A stormwater interceptor for wastewater transfer to the emergency pit if flow exceeds the design value during a storm or in case of problems with the oil tanks, for example rupture of a shell when a great quantity of petroleum products is discharged to the sewer;

2) The emergency pit, the volume of which is designed for 20 min inflow of stormwater during a rain with frequency of once per year plus the volume of the largest surface tank of the serviced tank farms; the total volume of the emergency pit should not exceed 20,000 m^3. The pit is usually earthen, protected by concrete slabs. The sedimented water should be transferred to subsequent treatment in 3-4 days;

3) Grit chambers for removal of coarse mineral admixtures and some floating petroleum products;

4) Oil traps to recover the principal part of floating petroleum products and precipitating mineral impurities. The volume of the oil traps is designed for not less than 2 hr retention time;

5) Radial settling tanks for additional separation of petroleum products and suspended matter and also for equalization of the wastewater composition, designed for 6-8 hr inflow. The settling tanks are provided with devices to skim floating petroleum products and to rake the sludge;

6) Pressure flotation units with 50% recirculation of wastewaters and the use of a coagulant (aluminum sulfide or iron sulfate) and a flocculant (polyacrylamide) to separate emulsified petroleum products from the water. Sand filters can be used for the same purpose with proper substantiation. In flotation, the dosage of $Al_2(SO_4)_3$ coagulant as dry solids is taken at 50 mg/*l* for the first system, and 50-100 mg/*l* for the second, with a polyacrylamide dosage of 0.75-1.5 mg/*l* and a wastewater load including recirculation of 4-5 $m^3/hr \cdot m^2$ of flotator area. Only the recirculation water is saturated with air (3-5% of the volume of water). The air is ejected into the pump intake pipe. For better dispersion of

Table 48.3
Concentration of contaminants in refinery wastewaters after mechanical treatment

Indices	Values of indices, mg/*l* for refinery sewerage system	
	first	second
Petroleum products(carbon tetrachloride extractives)	25	25
Suspended matter	30—40	40—60
total salts	700—2000	5000—6000
Phenols	5—8	2—3
Ammonia nitrogen	25—30	20—30
Surfactant(demulsifier)	—	20—100
COD, mg/*l*	170—400	400—600
BOD_{tot}, mg/*l*	150—250	200—300

the air in the water, the mixture is injected into a saturator with the retention time of 2-4 minutes, in which a pressure of 0.3-0.4 MPa is maintained. The foam removed from the flotators (3-4% of the wastewater flow) goes to the sludge ponds,

7) Emergency tanks for excess stormwater if the stormwater inflow exceeds the capacity of the emergency pit. These tanks are used when the technological regime of any of the sewerage systems is disrupted. They are designed for a one-day flow of the wastewater from the largest of two systems. The water from the emergency tanks can be treated in 9-12 days. With proper substantiation, for example, when the water can be collected in low places in the terrain with no outflow, when the water goes to evaporation ponds, etc., emergency tanks are not provided.

More detailed information on oil traps, settling tanks, flotators and other facilities for mechanical treatment of wastewaters are presented in Chapters 12 and 14.

The concentration of contaminants in wastewaters from oil refineries after the mechanical treatment facilities is presented in Table 48.3.

48.1.5. **Biological treatment of wastewaters**

Facilities for biological treatment of petrochemical wastewaters are similar to the facilities for treatment of municipal wastewaters.

The wastewaters from the first refinery system undergo single-stage biological treatment with addition of nutrients, which are added in accord with the ratio: 100 mg/*l* BOD_{tot}, 5 mg/*l* nitrogen and 1 mg/*l* phosphorus.

The wastewaters of the second system are directed to biological treatment, usually in a mixture with sanitary wastewater after separate mechanical treatment. Here single-stage biological treatment is provided when the water contains not more than 20 mg/*l* sulfides and BOD_{tot} is less than 250 mg/*l*, and two-stage treatment when these values are exceeded. The concentration of salts in

Table 48.4
Refinery wastewater biological treatment design parameters and treatment effect

Indices	Values of indices for refinery wastewater management systems		
	first (single-stage treatment	second	
		single-stage treatment	two-stage treatment
Aeration time, hr	5—6	6—8	3—4 / 6—8
Air flow at water depth of 5 m, m^3/m^3 of water	15—20	15—20	20—25 / 10—14
Sludge dosage as dry solids, g/*l*	2—4	2—3	3—4,5 / 0,5—1
Sludge growth as dry solids, g/m^3	25—50	25	25—50
Water retention time in secondary clarifiers, hr	3	3	1,5 / 3
Contaminant concentration in water after treatment, mg/*l*:			
ethyl ether extractables:			
a) total	10—15	10—15	8—20
b) including petroleum hydrocarbons	3—5	3—5	3—5
suspended matter	To 25	20—25	20—25
phenols	0,2—0,3	—	0,1
surfactants (demulsifiers)	—	5—30	4—25
BOD_{tot}, mg/*l*	12—20	15—20	10—20

Notes: 1. Indices for the first treatment stage given above the line, and those under the line are for the second stage.
2. The residual surfactant concentration depends on the type of demulsifiers used. The wastewater salt concentration practically does not change during treatment. The residual oxygen concentration is 3-4 mg/*l*.

the treated water should not exceed 10 g/*l*, and the concentration of petroleum products should not exceed 25 mg/*l*. The optimal ratio of industrial and sanitary wastewaters is 1:1 (1:0.5 is permitted).

The design parameters of the biological wastewater treatment facilities of the first and second refinery wastewater management systems are presented in Table 48.4.

These facilities can also be designed on the basis of a detailed investigation of the biological treatment of particular plant wastewaters.

According to the technological requirements, biologically treated waters from the first system should be filtered before recycling to the plant, which will result in a decrease in the concentration of petroleum products to 2-3 mg/*l*, suspended matter to 4-6 mg/*l*, and BOD_{tot} to 5-7 mg/*l*.

The volume of the regenerators is usually equal to or less than 30% of the total aeration tank volume. When two-stage treatment is used, regenerators are provided only in the first stage.

In the case of combined treatment of municipal wastewaters with refinery wastewaters, two flows of municipal wastewaters are provided: the first (principal) without mixing with the industrial effleunts, and the second with transfer of the required quantity of municipal water for combined treatment. This method provides high operational reliability of the complex of facilities and decreases the residual quantity of petroleum products in the treated water due to the smaller volume of wastewaters diluting the petroleum products.

48.1.6. Tertiary treatment of wastewater

For tertiary treatment of the refinery wastewaters the same facilities are used as those for biologically treated municipal wastewaters. This includes drum screens, granular filters, microfilters, biological ponds, flotation units, etc. (see Chapters 30, 31 and 33).

Sand filters usually have a bed depth equal to 1000-1200 mm and particle size of 1.5-3.5 mm. The filtration rate is up to 15 m/hr. The filters are backwashed with water from the secondary clarifiers. To control biological growths the filter is periodically treated with chlorinated water (contact time 1-1.5 hr).

After flotation or the filters, wastewater is retained for 5-10 days in a buffer pond, usually consisting of two parallel sections, each with three successive stages.

The following are typical concentrations of admixtures after filters and the pond, respectively: to 5-7 and 2-3 mg/*l* of BOD_{tot}, to 4 and 3 mg/*l* suspended matter, to 4-7 and 2-3 mg/*l* ethyl ether extractables, including 1.5-2.5 and 1 mg/*l* petroleum hydrocarbons and phenols to 0.1 and 0.04 mg/*l*.

The dissolved oxygen concentration in the filters decreases to 1-2 mg/*l*, and is usually restored to 6 mg/*l* in the ponds.

48.1.7 Treatment of the recovered petroleum products and petroleum sludge

The petroleum products are collected in the first and second systems (grit clarifiers, oil traps, settling tanks, ponds, etc.) and from the recycled water system (oil separators). The water content of the influent petroleum products is 50-70%. These products should be dewatered.

The total quantity of recovered petroleum products is determined using their mean concentration in the wastewater: 0.5% (5 g/*l*) in the first system, 1% (10 g/*l*) in the second system, 0.005% (50 mg/*l*) in the common (all plant but barometric condensers) cooling system of the recycled water system, and 0.5% (5 g/*l*) in the systems serving the barometric contact condensers.

The dewatering of the petroleum products is usually accomplished in separation tanks (steel reservoirs above the ground surface of the type usually used to store crude) with preheating of the petroleum products in heat exchangers to 50-70°C. The number of reservoirs is not less than three. The separation time,

Table 48.5
Computation data for determination of the quantity of oil sludge

Type of equipment from which the sludge is discharged	Content of suspended matter in the waste-water	Suspended matter removal effect, %	Bulk density of the sludge, ton/m³		Content of petroleum products in sludge (fresh), wt.%
			freshly precipitated	caked	
Grit chambers	200—350	20	1.2	2.1	6—10
Oil traps	160—280	60—70	1.1	1.5	20
Oil separators	60—80	20	1.0	1.3	5
Settling tanks and ponds	60—100	50	—	1.3	3—5
Flotation equipment	40—60	50	—	—	5—7

including the operations of pumping water-containing petroleum products, their sedimentation, the discharge (drainage) of the wastewater, and pumping out the water-free petroleum products, should be not less than 3 days. The reservoirs are connected to permit either parallel or series service.

The water content in the petroleum products after separation should not exceed 2-5%, and the mechanical admixtures should not exceed 1-2%.

With appropriate substantiation and testing, other methods are also permitted for separation of the water-containing petroleum products, for example on centrifugal separators using a demulsifier by dilution of the trapped products with gasoline, which results in an intensification of the sedimentation process.

After water removal the petroleum products are returned to the plant for refining; the drainage water is returned to the second wastewater management system before the oil traps.

Oil-containing sludge is discharged from various equipment of industrial water supply and sewerage systems and also from plant technological tanks. In the latter case transport of the sludge through sewerage pipes is prohibited.

The quantity of oil sludge going to storage or treatment is determined with regard to the equipment from which it is discharged (Table 48.5).

The volume of sludge from crude tanks at the plant on the basis of industrial design data should also be considered.

When designing storage for oil sludge, the terrain is considered. Storage constructed on a flat site consists of earthen ponds surrounded by embankments. The height of the embankments is 2.5-3 m, their width at the top 1.5 m; the height of the embankments is increased as the sludge accumulates. The number of pond sections is 3-4. The area of the water surface in each section is not over 4200 m^2. The width of a single side is up to 42 m, and the distance between the sections should be not less than 10 m in accord with fire safety specifications.

Storage ponds for oil sludge should be considered a temporary means, as it involves utilization of significant area and creation of unfavorable sanitary and hygienic conditions near the plants. With this in mind, it is recommended that the sludge be accumulated for not over 1-2 years. The approximate average

composition of the sludge in the ponds is as follows: suspended matter 15%, petroleum products 20-25%, water 60-65%.

The oil sludge can be treated using equalization, dewatering, and utilization or destruction processes. Since this sludge contains combustible products, incineration is the most feasible solution. In Soviet practice there is experience in the incineration of sludge in a fluidized bed furnace at 1000-1100°C. The calorific value of 1 kg of sludge of average composition reaches 9200 kJ (2200 kcal), which exceeds the quantity of heat (6900 kJ [1650 kcal]) required for its combustion. Fuel may be required only when lighting the furnaces. To burn the oil sludge, furnaces of other types can also be used: multihearth, rotating drum and cyclone furnaces. The sludge can be prepared for combustion by dewatering in vacuum filters (foreign experience), when a drier sludge is obtained.

More detailed information on the operation of furnaces for combustion of sediments and sludges is presented in Chapter 39.

48.1.8. Promising technical advances in refinery sewerage

In the near future, as a result of improvement in technology at refineries, a significant decrease in the quantity of water used and wastewater produced per 1 ton of crude refined may be expected. This circumstance should aid in the adoption, particularly at new plants, of closed water systems, completely excluding contamination of water sources by wastewaters.

The respective schemes, developed by the research and development institutes of the industry (for the Lisichansk and Achinsk refineries and others), involve utilization of a recycled water system, with the make-up water produced from wastewaters, stormwater and condensate.

Wastewaters are subjected to local, mechanical and biological treatment; a constant saline composition of the recycled water is maintained by desalination of both the wastewater in the second system and a fraction of the recycled water flow, which is discharged into the second system for this purpose. Use of a thermal desalination unit is provided.

According to the data of VNIIPIneft Institute in Leningrad, this type of solution permits a decrease in the specific capital investment in the wastewater removal and treatment system by 7-15% with an increase in the operating costs by 6-12%.

In order to intensify petroleum-containing wastewater treatment processes, new and improved existing treatment facility designs must be adopted. For example, for mechanical treatment it is promising to use hydrocyclones and multilevel oil traps, with smaller volume than standard oil traps and a high oil capacity per level. Flotation will be further improved, particularly electric flotation units, with thorough removal of oil from the water. To intensify the operation of biological treatment plants, technical oxygen will be used in the pure oxygen aeration tanks; combined aeration tank-clarifiers with an increase in the activated sludge dosage will be used more often. Baked rock will be used for filter beds for more thorough treatment of wastewaters, polyelectrolytes and sorbents will be

National Petroleum Council

AIR POLLUTION CONTROLS

This section describes techniques used at refineries and at terminals and transportation facilities.

Refineries

Air emissions vary significantly both in quantity and type among refineries and their effect on the environment varies according to the location of the refinery. Air pollution is unique in the sense that the pollutants may travel across national and state boundaries. Refinery emissions are affected by crude oil feedstocks, processes, equipment, control measures, and maintenance practices. Generally, air pollution control systems are associated with specific process units and designed to remove specific contaminants.

Table I-1 shows the major types of air contaminants associated with refining along with the major sources. The following sections discuss the sources and control methods for hydrocarbons, sulfur oxides, nitrogen oxides, carbon monoxide, particulates and odors from refinery sources.

Hydrocarbons

Hydrocarbon emissions are potentially the largest type of emissions from refineries, and considerable attention is given to reducing these emissions. Sources include process stacks (primarily the process heaters), storage tanks, the product loading terminal and fugitive sources such as valve stems, pump and compressor seals, drains, and oil/water separators. Specific sources of hydrocarbon emissions (both point source and fugitive) and methods to control them are discussed below.

Storage Tanks

A major source of hydrocarbon emissions to the atmosphere from a refinery is evaporation loss from tankage. The most commonly used storage for volatile hydrocarbons is the floating roof tank. Recent use of double seals on the floating roof tank has improved this technique so that very little hydrocarbon can escape to the atmosphere, even under adverse conditions such as high winds.

Evaporation from a storage tank is the natural process whereby a liquid is converted to a vapor which then is lost to the atmosphere. Where a vapor space exists, as in a fixed roof tank, the space tends to become saturated with hydrocarbon vapors, depending on the volatility and temperature of the stored liquid. The tank subsequently loses these vapors to the atmosphere, primarily from: breathing loss, which results from thermal action and the daily expansion and contraction of the vapor space; and filling or withdrawal loss, where vapors are expelled from a tank as a result of filling or withdrawing. In a refinery, the usual method for reducing storage tank losses is to install a floating roof in place of, or by converting, a fixed roof tank. Pressure tanks designed to withstand relatively large pressure variations without vapor loss are generally used to store highly volatile refinery products.

TABLE I-1

Pollutants	Sources
Hydrocarbons	Loading facilities, turnarounds, sampling storage tanks, wastewater separators, blow-down systems, catalyst regenerators, pumps, valves, blind changing, cooling towers, vacuum jets, barometric condensers, air-blowing, high pressure equipment handling volatile hydrocarbons, process heaters, boilers, compressor engines, distillation towers, and separators.
Sulfur Oxides	Boilers, process heaters, cracking operations, regenerators, treating units, H_2S flares, decoking operations.
Nitrogen Oxides	Process heaters, boilers, compressor engines, catalyst regenerators, flares.
Carbon Monoxide	Catalyst regeneration, decoking, compressor engines, incinerators, boilers, and flares.
Particulate Matter	Catalyst regenerators, boilers, process heaters, decoking operations, incinerators, flares.
Odors	Treating units (air-blowing, steam-blowing) drains, tank vents, barometric condenser sumps, wastewater separators, and biotreatment units.
Aldehydes	Catalyst regenerators.
Ammonia	Catalyst regenerators, waste treatment ponds, water stripper, waste caustic, ~~dis~~ distillation

2 Transportation Facilities

In moving and handling gasolines and crude oils, evaporation and entrainment losses occur in both loading and unloading operations. The transport carriers are usually tank trucks, tank cars, barges and tankers. Pipeline deliveries are the most efficient and pipeline losses are considered negligible.

The greatest determinant in total loss in loading tank cars and trucks is the method of loading: splash loading, submerged fill or bottom loading. In splash loading, the liquid is discharged by a short spout into the upper part of the compartment. The resultant free fall increases evaporation and may result in a fine mist of liquid droplets. In submerged surface loading, the bottom of the loading pipe is within a few inches of the bottom. At first, until the tip of the loading arm is covered, higher losses result. When the bottom of the loading arm is covered, there is a marked decrease in turbulence and evaporative losses are reduced. Bottom loading is a complete type of subsurface loading, where the liquid in introduced from the bottom of the tank, and results in less evaporative loss. Bottom and submerged loading are standard practices, while splash loading use has decreased significantly. Losses in loading may be reduced further by vapor recovery, with 95 to 99 percent effectiveness; they are now used frequently.

3) Sedimentation Devices

The sedimentation device used is normally an API separator but basins or other devices may also be used for sedimentation purposes. These include ponds or lagoons and, more recently, stilling tanks, all of which receive influent water directly from the refinery, prior to any settlement treatment.

In the process of sedimentation, oil contained in the wastewater rises to the top of the basins and if the area is uncovered, evaporation occurs, and hydrocarbon vapors are emitted. There are many factors which contribute to the extent of the loss, and major factors are true vapor pressure of the slop oil, sedimentation area, total time of exposure, film thickness, and average wind velocity.

There are two basic methods of control. The first involves design modifications to and suitable maintenance in the wastewater collection system upstream of the separator so as to reduce the total amount of oil. This may also reduce the volatility of the oil. The second method involves covering the separator, utilizing either a floating roof or a fixed roof.

The basic mechanism of oil evaporation from post-gravity sedimentation devices is similar to that of primary gravity separation devices. Several important differences in degree exist, however, all of which will tend to reduce evaporation losses. As a result, losses from these devices would tend to present a problem only where stringent air pollution regulations are a requirement. The major factor contributing to evaporation losses from these devices is the true vapor pressure of the oil and the carrying capacity of dissolved or entrained air when used. Losses are considerably less than in a primary device because only 10 to 15 percent of the oil remains for further or potential evaporation.

Accordingly, hydrocarbon emissions are considered negligible for most post-gravity sedimentation devices and especially for secondary ponds and lagoons in which there are no aeration devices. As regards air flotation units, a slight problem may exist. In these devices, oil and air bubbles collect on the surface in a frothy scum. Some volatilization will occur from the oil and released air bubbles will contain a slight amount of hydrocarbon vapors. Under some conditions, hydrocarbon vapors may be detected in the immediate vicinity of an air flotation unit on the downwind side. There are two types of these units.

First, the standard air flotation device is one in which the release of dissolved air causes oil and sediment particles to rise to the surface. Oil removal efficiency is 50 to 70 percent, which may be increased to 60 to 90 percent with chemical additives. Second, an induced air flotation unit is used in which atmospheric air is intimately mixed with the incoming wastewater. The oil removal efficiency has not been established but may approximate 50 to 80 percent with normally required chemical additives. Only fixed covers are used in either the standard dissolved air flotation device or the air-mixing device. If floating covers were used, they would interfere with the collection and removal of oil and scum. When a fixed cover is used, it may or may not be connected to a vapor disposal system. If it is not used, hydrocarbon emissions would be difficult to evaluate but would approach 10 percent of the loss figures shown for uncovered primary sedimentation devices as a maximum. If a vapor disposal system is used, hydrocarbon emissions are essentially zero.

4) Pressure Relief Systems

The generic term "pressure relief valve" includes the relief valve for liquid flow and the safety valve for gas flow, both designed as a safeguard against overpressure. These valves dis-

charge during periods of overpressure and, in addition, usually have a slight continual leakage rate. Both sources, of course, have the potential to result in hydrocarbon emissions to the atmosphere.

Vapors are discharged primarily to flare systems and also to the atmosphere provided that this does not violate national and local regulations and that the vapors are below their autoignition temperature. Hydrocarbon vapors are discharged to the atmosphere from relief vents under varied conditions, but the most common discharge is that of flammable vapors heavier than air, but of relatively low molecular weight. This type of discharge is subject to standard safe practice provisions.

The number of pressure-relief valves in a 100M barrel per day refinery will vary considerably but might approximate 1,000 to 2,000 valves. These valves may discharge into the atmosphere or into a closed pressure-relief system that terminates in a flare. Hydrocarbon emissions from a flare may be considered negligible. From present indications, the percentage of valves in a refinery discharging into the flare system varies greatly from a low of 10 percent to a high of 90 percent.

The amount of daily or annual emission of hydrocarbons to the atmosphere or to a pressure-relief system depends on two factors: overpressuring and leakage of the relief valves. The control system most used today is for the discharge vapors to be sent to a closed pressure relief system that terminates in a flare. If the relief valve does discharge to the atmosphere then emissions can be minimized by establishing a system of periodic inspection and maintenance, or by providing each relief valve with a rupture disc.

Vacuum Devices

In refinery processing and particularly in crude oil distillation, it is frequently desirable to conduct the process under vacuum conditions to avoid excessive temperature, excessive steam consumption or both. Two common methods of producing this vacuum are barometric condensers in conjunction with steam-actuated vacuum jets (singly or in series) and surface condensers which also require auxiliary vacuum jets. Vacuum pumps are seldom used except for clean gas removal and moderate vacuum.

The source of loss to the atmosphere for either barometric or surface condensers is the noncondensable gases. The term noncondensable is related to the final water temperature obtained, with lower temperatures being associated with lower volumes of noncondensables. In vacuum distillation, noncondensables will include lighter gases, propane, butanes, and pentanes. The quantity of such vapors is dependent on many factors including composition of crude oil (or composition of charge to vacuum tower) and the pressure maintained in the atmospheric tower.

Although cooling water temperatures can be lowered to reduce noncondensables, this is frequently not practical for an existing installation. In any event, it would only serve to reduce the magnitude of the problem. There are two methods by which noncondensables may be minimized or handled to eliminate hydrocarbon emissions. First, installation of an absorption system between the vacuum tower and the first-stage vacuum jet, and, second, incineration of noncondensables or else discharging them to the vapor recovery system.

Air-Blowing

Air-blowing of petroleum products is confined largely to the manufacture of asphalt, although air is occasionally blown through heavier petroleum products for the purpose of removing moisture. Air- or steam-blowing is still used occasionally to strip spent chemicals. The use of air for general purposes of agitation, formerly quite common in treating operations, is today practically nonexistent.

Regardless of the purpose for which air-blowing is used, asphalt-blowing, moisture removal, or other, the resultant exhaust air contains hydrocarbons and aerosols. In asphalt-blowing particularly, and in the stripping of spent chemicals, noxious odors are produced and disposal is required.

The recovery of hydrocarbons from asphalt-blowing operations is important, not only because of the quantity, but also because of their malodorous characteristics. The poor quality of the gaseous hydrocarbons makes them suitable only for use as fuel.

There are two methods normally used for removal of hydrocarbon vapors in exhaust gases: (a) scrubbing vapors with water; and (b) incinerating vapors in an afterburner or heater firebox. Scrubbing of the vapors will serve to condense steam, aerosols, and essentially all of the hydrocarbon vapors. Usually, there is a small amount of noncondensable gas of pungent odor. This method requires a readily available adequate water supply as there is a high ratio of water to vapor.

Pump Losses (and Mechanical Seals)[1]

The most common refinery pumps are centrifugal pumps and positive displacement pumps. On these pumps leakage losses occur where the driving shaft passes through the pump casting. Leakage losses include volatile, as well as nonvolatile products, but our present concern is with volatile products only.

In refinery application, the pump leakage area is usually protected with a packed seal. In a typical packed seal, the driving shaft is equipped with a stuffing box which is filled with coils and spirals to form closed or nearly closed rings. This packing can be tightened around the shaft.

Lubricant is effected either by a lantern ring or else by a controlled amount of leakage to the atmosphere. The lantern ring is usually used on pumps handling volatile products. The ring provides an opening for the forced feeding of oil or grease into the packing, thus giving a constant supply of lubricant. Losses occur from packed seals, as previously described, and also from the improved mechanical seals.

Mechanical seals reduce leakage and, therefore, reduce emissions to the atmosphere. They can be specified for new pumps or can be installed in existing pumps by replacing the packed seal. The mechanical seal is recommended to reduce hydrocarbon emissions for more or less continuous pumping or products having a Reid vapor pressure of 2.3 kilograms (5 pounds) or greater.

The term mechanical seal denotes a prefabricated assembly that operates as a thrust bearing and forms a running seal between flat surfaces. The seal consists of two rings, one sta-

---

[1] This discussion is also relevant to compressors and mechanical seals for compressors.

tionary, the other attached to the shaft and rotating with it. The wearing faces are at right angles to the shaft and are lubricated by a thin film of material being pumped. The seal depends upon continuous contact between rotating and fixed collars to limit leakage. Both single (described above) and double mechanical seals are commonly used.

Another method is also applicable to pumps with ordinary packing or pumps that have been equipped with mechanical seals. In this application a liquid, less volatile that the product being pumped, is introduced between a dual set of mechanical seals (or between two sets of packing). This liquid is at a higher pressure than the product and, hence, passes by the packing into the product with which it must be compatible. The original product cannot leak past the packing or seal. Some of the pressure-sealing liquid, however, will pass through the outer packing or seal and should be collected at this point. Some systems also have seal pits or seal fluid reservoirs where any leakage (dissolved gases or air) from the pumped fluid can be collected. The value and effectiveness of this method in reducing hydrocarbon emissions is dependent on the use of a low-volatility liquid which will not contaminate the product. Finally, for some applications, seals vent directly to a vapor recovery system.

Miscellaneous Sources of Loss

In addition to the major sources of potential loss discussed in this document, there are various other miscellaneous sources, relatively minor, that contribute to hydrocarbon emissions. Probably the most important of these sources are equipment leakage, unit burners or furnaces, equipment turnaround, tank cleaning, cooling towers, and gas-fired engines.

Other refinery operations, such as blow-down systems, blind changes, sewers and process drains, sewer vents, and sampling, represent potential sources of loss. These losses cannot be quantified but can usually be kept to relatively minor values by suitable, normal precautions.

Sulfur Oxides (SOx)

Sulfur Oxides (SOx), one of the most common air pollutants, are most often produced when a sulfur-containing fuel is burned. In refineries, the major part of the SO2 emission arises from the combustion of refinery fuels to provide energy for the various processes and to raise steam. The major sources of SO2 emissions are the boilers, process heaters, catalytic-cracking unit, regenerators, treating units, H2S flares, and coking operations.

The amount of SO2 from refinery fuels depends on the quantities of fuels used and on their sulfur contents. As discussed in the process section, the crude oil and intermediate and finished product streams are treated to remove sulfur compounds. This not only provides low sulfur fuel oil for supplemental refinery fuel, but also improves air quality in general by providing low-sulfur products for sale.

The major source of emissions, refinery fuel combustion, can be controlled either by restricting the sulfur level in refinery fuel or by scrubbing the stack gases prior to discharge into the atmosphere. Sulfur levels may be reduced by using hydrodesulfurization, followed by sulfur recovery. In general, the capital investment requirements to install stack gas scrubbing to control SOx is at least as great as the alternative of fuel sulfur reduction, thus, in light of the additional benefits generated by removing sulfur from the refinery products, stack gas scrubbing is sparingly used.

Fluid catalytic cracking (FCC) regenerator unit SOx emissions are generally controlled by desulfurizing the hydrocarbon feed to the unit or by scrubbing the regenerator stack gas prior to discharge. Again, desulfurizing is often the preferred route, especially when the benefits of improved FCC operations are considered. When a high degree of feed desulfurization is required to meet a stringent emission limit, then feed desulfurization in combination with a sulfur oxide control catalyst or scrubbers is more desirable.

The sulfur recovery unit (typically a Clause Unit) emissions are controlled both by increasing the level of sulfur recovery and by stack gas scrubbing. An alternative, normally used is tail-gas treatment as discussed in the refinery process section.

Other sources of sulfur-oxide emissions in a refinery may include:

- Release from sulfuric acid used in processing.
- Disposal of sulfuric acid sludges, whether by processing in recovery units or by direct burning in special furnaces.
- Sulfuric acid reduction when hydrocarbon or other organic matter is oxidized, especially during the air-blowing of lubrication oils after acid treatment. Sulfur dioxide remaining in the treated oil and acid sludge may vaporize continuously under some conditions.

Nitrogen Oxides (NOx)

The major sources of NOx emissions are from combustion processes including process heaters, boilers, compressor engines and catalyst regenerators.

Oxides of nitrogen (NOx) formed in combustion processes are usually due either to thermal fixation of atmospheric nitrogen in the combustion air, leading to thermal NOx, or to the conversion of chemically-bound nitrogen in the fuel, leading to fuel NOx. For natural gas firing, nearly all NOx emissions result from thermal fixation. With residual oil, crude oil, and coal, the contribution from fuel-bound nitrogen can be significant and under certain operation conditions, predominant.

The fixation of a small fraction of the molecular nitrogen in the combustion air results in the formation of thermal NOx. Overall, the main factors in thermal NO and NO2 formation are flame temperature, the length of time the combustion gases are maintained at high temperature, combustion pressure, and the amount of excess oxygen present. Therefore, in the combustion of natural gas, which is virtually free of bound nitrogen, the quantities of NOx produced in the absence of special controls may exceed 1,000 ppm in the flue gases. This fact indicates clearly that high-temperature fixation of atmospheric nitrogen occurs. It is generally accepted that thermal NOx is formed at temperatures in excess of 1,800 degrees C (3200 degrees F) in the presence of excess air.

Fuel NOx is due to the oxidation of a portion of the nitrogen combined with the fuel. This chemically-bound nitrogen reacts with oxygen much more readily than the molecular nitrogen supplied with the combustion air. However, the bound nitrogen is emitted preferentially as molecular nitrogen and only partly as NOx emissions. The role of fuel nitrogen content has been studied in laboratory fuel oil combustion experiments, which indicate that NOx formed by the oxidation of fuel nitrogen is relatively unaffected by changes in combustion conditions.

NOx control techniques for stationary sources operate either through suppression of NOx formation in the process or through physical or chemical removal of NOx from the stack gases.

NOx formation can be reduced by (1) reducing nitrogen level at peak temperature, (2) decreasing oxygen availability at peak temperature, or (3) reducing peak temperature and residence time in the combustion zone.

Combustion Modification is the most cost-effective and energy-efficient technology used to control combustion generated oxides of nitrogen and has been successfully implemented on existing gas and oil-fired boilers to comply with emission standards. (These modifications have been demonstrated for coal, as well as gas and oil-fired facilities.) This technique can result in up to 60 percent reduction in NOx emissions depending on projected baseline emissions. However, this level of reduction may not always be cost effective or even technologically feasible.

Successful combustion modification reduction techniques include Low Excess Air Combustion, Flue-Gas Recirculation (FGR), Staged Combustion, Low NOx Burners and Catalytic Combustion. Low Excess Air Combustion involves reducing the total amount of excess air supplied for combustion in industrial boilers and process heaters to decrease both thermal and fuel NOx formation. Since low excess air firing also increases efficiency (decreased fuel consumption), it is generally considered as part of an energy conservation program and has probably been already implemented in most cases.

Flue-Gas Recirculation (FGR) consists of extracting a portion of the flue gas and returning it to the furnace, admitting the flue gas to the primary combustion zone. FGR lowers peak flame temperature and reduces oxygen concentration in the fire box. FGR has been found effective in reducing thermal NOx.

Staged Combustion is based on operation with a rich primary combustion zone in the furnace to reduce oxygen availability and peak temperature, followed by secondary air injection to achieve carbon burnout. The reduced oxygen availability in the primary combustion zone reduces the conversion of fuel nitrogen to NO and the reduced peak temperature and subsequent heat removal prior to secondary air addition reduces thermal NOx.

Low NOx Burners are generally designed to reduce flame turbulence, delay fuel-air mixing, and establish fuel-rich zones where combustion initially takes place. Low NOx burners produce longer and less intense flames, as compared to conventional burners, which results in lower flame temperatures and reduced thermal NOx generation. In addition, the reduced availability of oxygen in the initial combustion zone inhibits fuel NOx conversion.

Catalytic Combustion uses a catalyst to accelerate the rate of chemical reaction so that the rate of burning is achieved at a lower temperature, avoiding the formation of NOx.

Carbon Monoxide (CO)

The fluidized catalytic cracker (FCC) regenerator, steam boilers, process heaters, compressor engines, and the gas turbines are the major sources of CO. Carbon monoxide results from the incomplete combustion of fuels. Control can be accomplished either by proper design and operation of the equipment, or, as is usually the case with the catalyst regenerators, by providing a separate means for completing the conversion of carbon monoxide to carbon dioxide.

In the case of the FCC regenerator, the best demonstrated control technology for carbon monoxide is considered to be the carbon monoxide incinerator-waste heat boiler. An alternative to the CO boiler is the use of the new catalytic crackers that use improved catalyst and high-temperature regeneration to limit CO generation. In these cases, the catalyst is regenerated at a high temperature with a promoter, and the carbon monoxide is burned in the regenerator instead of being emitted to the atmosphere.

CO emissions from the process heaters and boilers are minimized by monitoring the combustion parameters, especially oxygen, to ensure good combustion.

CO emissions from the gas turbines and compressor engines will be minimized by the same techniques as for the process heaters.

Particulates

The primary sources of particulates are the process heaters and boilers, the FCC regenerator, coke handling, the gas turbines, and the solid-waste incinerator. Particulates can be controlled by the use of wet scrubbers and high-efficiency mechanical collectors (cyclones, bag houses); electrostatic precipitators on catalyst regenerators and power plant stacks; controlled combustion to reduce smoke; controlled stack and flame temperatures, and improved burner and incinerator design.

The emissions from boilers and process heaters are largely a function of the quality of the fuel used. If a fuel has a high ash content, a large portion of that ash will appear as fly ash in the flue gases. The technology for the removal of particulates resulting from the combustion of coal or oil is quite well known, primarily high-efficiency mechanical cyclones and electrostatic precipitators. Also, particulates can be controlled by proper operating parameters and adjustments of the air-to-fuel ratio.

The principal refinery process unit subject to control of particulates is the fluid bed catalytic cracker. Particulates from the FCC are controlled by electrostatic precipitators, high-efficiency cyclones, dry scrubbers, wet scrubbers, or baghouses. The most commonly used equipment is the electrostatic precipitator.

The electrostatic precipitator removes particulates from gas streams by passing the gas between a pair of electrodes—a discharge electrode at a high potential and an electrically grounded collecting electrode. The potential difference must be great enough so that a corona discharge surrounds the discharge electrode. Under the action of the electrical field, gas ions formed in the corona move rapidly toward the collecting electrode and transfer their charge to the particulates by collision with them. The electrical field interacting with the charge on the particles then causes them to migrate toward, and be deposited on, the collecting electrode.

The dust layer that forms on the collecting electrode is removed by intermittent rapping that causes the deposit to break loose from the electrode. In effect, this returns the dust to the gas stream but not in its original finely divided state. As a result of cohesive forces developed among the particles deposited on the electrode, the dust is returned as agglomerates, which are large enough for gravity to cause them to fall into dust hoppers below the electrodes. Reduced to its essentials, the electrostatic precipitator acts as a particle agglomerator combined with a gravity settling chamber.

Where clay recovery kilns are used (as in lube oil finishing), the regeneration of the clay can result in particulate emissions that can be collected by mechanical cyclones, wet scrub-

bers, or electrostatic precipitators. Baghouses can also be used to control particulates, as has been done in the regeneration of copper oxide used in the desulfurization of naphtha.

Improper operation of any combustion process can create smoke which is, of course, a particulate. Smokeless flares can be used as a means of abating carbon smoke particulate emissions from this source. Smokeless flare combustion can be obtained by the injection of an inert gas to the combustion zone to provide turbulence and inspirit air. A mechanical air-mixing system is ideal, but is not economical in view of the large volume of gases handled. The most commonly used air-inspiriting material for an elevated flare is steam.

Particulate matter from gas turbines results from ash introduced in the fuel or injection water and from incomplete combustion of the fuel. The only feasible control techniques are to limit the ash content of the fuel and the solids content of the injection water and to operate the turbine in a manner which results in good combustion.

An additional source of particulates is fugitive emissions from sources, such as roadways and construction. These sources of emissions can best be controlled by wetting, paving, or any other appropriate means of providing ground cover.

Odors

The primary causes of bad odors from refineries are sulfur compounds, such as H2S, mercaptans and disulfides, which are known to be present in crude oil fractions and have been detected in refinery atmospheres. Hydrocarbons can give rise to offensive odors, but generally at a lower level than sulfur compounds. The processing units which may emit odors include catalytic cracking, asphalt production, lubricating oil treatment, and sulfur recovery units. Also, any open stirring, venting, or flaring is liable to create odor emissions.

In the petroleum industry, absorption and combustion are the most used odor control methods and include: aldehyde absorption in bisulfite solutions; thiols absorption in sodium hydroxide solutions; hydrogen sulfide absorption in amine solutions, activated carbon, active manganese dioxide, and on sawdust; and hydrogen sulfide absorption followed by incineration or oxidation. Flares may be associated with regeneration of caustic washing solutions to combust thiols and hydrogen sulfide. Oxygen may even be added to flares to assure complete combustion, and masking agents and odor counteractants may be used to cover up odors.

Terminals and Transportation Facilities

The emissions and effluents generated by terminal operations and the control of those emissions and effluents is dependent not only on the specific operations but also on whether crude oils or finished petroleum products are being handled. The most significant air pollutants emitted by terminals are hydrocarbons. The other air pollutants of concern include odors, SOx, NOx, CO and particulates. The sources of hydrocarbons are storage tanks (normally onshore), transportation vessel tanks, tanker refueling, tank cleaning (both storage and vessels), tank degassing (preparation for inspection and maintenance), ballasting, and fugitive emissions. The methods used for onshore facilities are the same as those described in the Refineries section. The emissions from tanker refueling, tank degassing and other offshore operations may incorporate vapor recovery or vapor collection/disposal (flaring) systems. Other techniques include segregated ballasting, tank cleaning, slow loading, short loading and the routing of vapors into tanks that are being emptied.

For product terminals, the major sources of hydrocarbons are from the storage tanks, loading facilities for transports, barges and tankers. Other sources are primarily fugitive emissions and therefore are normally small in quantity. The most common means of controlling hydrocarbon emissions in a terminal are primary and secondary seals on the external floating roof of a tank without a fixed roof, primary seals on the internal floating roof of a tank with a fixed roof, installation of a vapor collection system for both the tankage and the loading facilities, and annual inspection of tank trucks to ensure they are airtight.

WATER POLLUTION CONTROLS

This section discusses controls used at petroleum refineries, storage and transportation facilities to minimize pollution of wastewater and groundwater.

Refineries

Wastewater Treatment

Two major units are employed in the purification of refinery wastewaters: the in-plant, sour water stripping unit and the wastewater treatment unit. The sour water stripping unit is used for pretreatment of water containing hydrogen sulfide, permitting reuse of the stripped wastewater. The wastewater treatment unit is the final treatment for all contaminated waters prior to discharge.

Sour Water Stripping Units

Water containing hydrogen sulfide is termed "sour water" or "sour condensate." Refinery operations produce sour water from processes such as hydrotreating, catalytic cracking, coking and whenever steam is condensed in the presence of gases containing hydrogen sulfide. Also, sour water often contains ammonia and small amounts of phenol and other hydrocarbons, which are odorous and may cause wastewater treatment plant upsets if untreated.

There are many stripping methods, but most involve the downward flow of sour water through a trayed or packed tower while an ascending flow of stripping steam or gas removes the hydrogen sulfide and ammonia.

Wastewater Treatment Units

Wastewater treatment units upgrade the quality of effluent water so that it can be safely returned to the environment or recirculated in the refinery. Refinery wastewater typically contains oil, phenols, sulfides, ammonia, dissolved and suspended solids, and sometimes other organic and inorganic chemicals. The type of treatment process varies with the nature and concentration of contaminants, and with effluent quality requirements.

The final effluent from a petroleum refinery is made up of wastewater from several sources, including process water, cooling water, ballast water and storm water. The types of equipment used for treating wastewater discharges can be generally classified as physical, biological, chemical, and physical/chemical. Physical techniques deal mainly with the removal of suspended materials, and include such techniques as air flotation devices, grit chambers, clarifiers, granular media filters, centrifuges and oil separators. Biological processes treat the biologically degradable fraction of the wastewater, and include trickling filters, activated sludge, aerated lagoons, oxidation ponds and rotating biological contractors. These biological pro-

cesses use microorganisms and oxygen to convert soluble organic contaminants to carbon dioxide and water. Chemical techniques and physical/chemical techniques rely on chemical or catalytic reactions to remove unwanted components. Prior to discharge, some refineries use a final polishing treatment with filtration, using granular media filters and granular activated carbon.

Spills

Refineries employ a number of techniques both to prevent spills and to minimize the adverse impacts of spills should they occur anywhere in the facility. Methods used to prevent spilled product from entering the ground (and hence the groundwater) include: construction of containment dikes; rendering the soil impermeable by using concrete paving, a clay or bitumen layer, plastic sheets covered with gravel and fiberglass-reinforced epoxy and chemicals to be mixed with the soil; and surface drain systems which carry all oil and oil-contaminated water to a dirty water sewer and then to an interceptor by means of a pipe system. Subsurface techniques which are used include the digging of trenches (which intercept the spread of oil and causes it to flow onto the water surface where it can be recovered), the building of walls extending below the water table to provide barriers to subsurface flow, and a technique called hydrodynamic protection which effects a change in the groundwater flow patterns such that the free oil or the contaminated water can be drawn to a specific point.

Stormwater Controls

Refineries employ techniques similar to those used for spills to keep stormwater away from petroleum liquids which may contaminate it and cause the runoff to pollute the adjacent ground and groundwater. Concrete paving, storm sewers, and other structures designed for this purpose are placed throughout the refinery, often designed for the worst-case storm anticipated for the region.

Corrosion Controls

The majority of petroleum spills which have reached groundwater resulted from corrosion of buried steel tanks and piping. There are two practical methods for preventing or reducing external corrosion of buried metal: preventing direct contact between the metal and the soil by using protective coatings, and by cathodic protection techniques, which reduce the electric current which can flow from the metal pipe into the adjoining soil, thus reducing corrosion reactions.

Monitoring

Groundwater monitoring devices are installed to detect and warn of contamination not visible from the surface. These devices are installed around petroleum storage areas, waste treatment and disposal facilities (including lagoons, land farms and landfills) or an entire facility if necessary.

Terminals and Transportation Facilities

The major environmental concern for crude oil terminals and their associated transportation facilities is contamination of wastewaters with oil and grease and the treatment of the

ballast and sanitary waters prior to discharge. The largest source of wastewater at a crude oil or product terminal is the ballast water from tankers. The disposal or treatment methods include discharging directly to the harbor (for segregated ballast, which is uncontaminated water carried in tanks dedicated to ballast service, and for clean ballast waters,) and onshore treatment for dirty ballast waters. Processes used for treatment of dirty waters include simply gravity separation, physical and chemical methods for removal of residual suspended matter and biological treatment.

Spills and seepage occurring at terminals comprise a major environmental concern. The techniques used in their prevention and mitigation are essentially the same as those described above for refinery facilities.

SOLID WASTE POLLUTION CONTROLS

This section discusses the types of solid wastes generated by refineries and other petroleum processing facilities, and the control methods used to meet environmental standards.

Sources

Typical solid wastes generated at a refinery include process sludges, spent catalysts, wastewater and raw water treating sludges, and various sediments. The volume of waste generated as well as the economics of material recovery are determined to a large degree by the type, age, and condition of process units and the market for product mix. Further, refineries in different geographic areas encounter widely varying requirements and problems associated with their individual solid waste streams. Treatment and disposal methods used in oil refineries are contingent upon the nature, concentration, and quantities of waste generated, as well as upon the potential toxicity or hazardous nature of these materials. Pollution control methods are further affected by geographic conditions, transportation distances, disposal site hydrogeological characteristics, and regulatory requirements.

Refinery process solid wastes can be generally divided into two types; intermittent and continuous. Intermittent process wastes are those which generally result from the cleaning of refinery facilities and which require disposal at intervals greater than two weeks. Typical examples of these wastes are (a) storage tank bottoms, (b) process vessel sludges, vessel scale, and deposits generally removed during plant turnarounds; and (c) product treatment facilities wastes, such as spent filter clays, and spent catalyst from units such as the reformer, hydrosulfurizer, etc. Continuous process wastes result from wastewater treatment processes and from manufacturing process units, and require disposal at intervals of less than two weeks. Typical examples of wastewater treatment wastes are (a) waste biosludge, (b) separator sludge, (c) dissolved air flotation float, (d) centrifuge cake, and (e) vacuum filter cake. Typical of manufacturing process unit wastes are (a) spent catalysts and catalyst fines from the FCC unit, (b) coker wastes, such as coke fines from the delayed or fluidized coker, and spilled coke from the unloading facilities, and (c) spilled grease and wax from the lube oil processing plants. Intermittent wastes are a function of refinery size and refinery diligence in maintenance and housekeeping practices. Continuous wastes appear to be a function of refinery wastewater treatment system complexity and of refining process unit structure.

Solid wastes can also be generated at terminals. Solid wastes, such as tank bottoms and separator box solids, generally are not generated at a terminal if the crude oil storage tanks are

kept well mixed and all of the contents are sent to the refinery for processing. Tank bottoms and separator bottoms are generated at product terminals. Crude oil shipping facilities, however, may generate solid wastes from the treatment of the ballast water. Management of these wastes can be accomplished by landfilling or land treatment.

Table I-2 lists the various sources of refinery wastes in addition to the general characteristics of the wastes. As indicated above, the characteristics of the waste is dependent upon several factors including crude oil compositions, refining processes, and refining procedures.

Predisposal Operations

Predisposal operations are designed to reduce the amount of waste requiring final disposal. Methods commonly employed are solids removal and dewatering, waste reduction, waste separation and concentration, energy/material recovery, and waste incineration/treatment.

Waste reduction involves changing the process to reduce the amount of waste material produced. Methods include new processes, treatment, use of different catalysts or chemicals, water reuse, and better process control.

As an example, one treatment procedure involves reducing the volume of crude oil tank bottoms by the use of polyelectrolytes. The process is performed prior to cleaning the tanks, at which time any crude oil remaining in the tank is pumped out to the sludge layer. The material in the tank is heated with steam and mixed with the crude oil tank bottoms to a temperature of approximately 54 degrees C. Two kinds of polyelectrolytes are added and the contents mixed for up to two days.

The crude oil sludge is broken down into a very distinct oil fraction and an underlying clear water fraction, both of which can be separately decanted from the tank.

Concentration by dewatering could cause the waste to be defined as hazardous even though it was not hazardous in the diluted or watered stage. In this case, the cost of handling and disposing of a smaller amount (concentrated) of hazardous waste would have to be balanced against the cost of disposing of a larger amount of nonhazardous waste.

Recovery of potentially useful substances, energy, or materials from hazardous wastes is desirable. Many wastes contain valuable basic materials, some of which are in short supply, making material recovery logical from both resource conservation and environmental viewpoints. Extraction of materials from concentrated waste usually requires less energy, and generates far less air and water pollution, than the processing operations required to produce the material from virgin resources. As material shortages become more widespread, material recovery from hazardous waste will become more attractive.

Likewise, the combustion of certain wastes to recover energy or heat value for other purposes is endorsed. Such operations usually require special high-temperature equipment with emission control systems an effluent monitors.

Other limitations are imposed by the quality control aspects of waste utilization for energy. The user facility must have an adequate supply of fuel with consistent heating value on a regular or full-time basis. Also, some provisions must be made for standby or emergency operations. These limitations must be carefully considered and integrated into the planning for any system using industrial wastes for fuel.

TABLE I-2

SOLID WASTE DESCRIPTIONS

Solid Waste	Characteristics
Crude Oil Tank Bottoms	Oil-water emulsion containing sand, dirt, inert solids, metals.
Leaded Tank Bottoms	Precipitated organic (alkyl) lead compounds, other destabilized additives, tank scale (primarily iron oxides), other metals including arsenic, selenium, mercury, cobalt, nickel, zinc, cadmium, and molybdenum.
Nonleaded Tank Bottoms	All petroleum products except slop oil, crude oil tank bottoms and leaded gasoline bottoms, tank scale and other corrosion products, metals.
API Separator Sludge	Heavy black oily mud; phenols, metals including those in leaded tank bottoms and chromium, grit, inert solids, sand.
Neutralized HF Alkylation Sludge	Relatively insoluble CaF_2 sludge; reactive; bauxite, aluminum.
Spent Filter Clays	Clay filter cake; metals, oil.
Once-through Cooling Water Sludge	Silt and other settleable solids in raw water supply, leakage from refinery processes, corrosion products, treatment chemicals.
DAF Float	Brown to black oily sludge; heavy metals.
Slop Oil Emulsions Solids	Mixture of crude and other petroleum fractions recovered from spills and separators; oil, metals.
Solids from Boiler Feedwater Treatment	Slurry of spent lime from softening of feed water inert solids.
Cooling Tower Sludge	Grey to black silt-like sludge; metals--primarily hexavalent chromium and zinc, dust, corrosion products, oil from process unit leaks.
Exchanger Bundle Cleaning Sludge	Mixture of metal scale (contains Zn, Cr, Ni, Co, Cd, Mo, Hg), coke, particulate matter and oil.
Waste Bio-sludge	Organic cell material from secondary wastewater treatment; oil, some heavy metals.
Storm Water Silt	Soil, oil, spilled solutions, metals, coke fines, etc., from storm water runoff.
FCC Catalyst Fines	Fine grey powder consisting of aluminum silicate catalyst fines with adsorbed heavy metals, primarily vanadium and nickel, inert solids, coke particles, heavy metals.
Coke Fines	Grey - black porous chunks and particle fines from coking processes; heavy metals.

Disposal Operations

Several options are available for ultimate disposal of refinery wastes including incineration, chemical fixation, landfilling, and land treatment. Table I-3 indicates the waste management options commonly used for the different refinery solid wastes. In all cases, the choices are landfilling or land treatment.

TABLE I-3

SOLID WASTE MANAGEMENT

Solid Waste	Management Options
Crude Oil Tank Bottoms	HW landfill, landfill HW land treatment, land treatment
Leaded Tank Bottoms	HW land treatment, HW landfill
Nonleaded Tank Bottoms	HW landfill, landfill HW land treatment, land treatment
API Separator Sludge	HW landfill, HW land treatment
Neutralized HP Alkylation Sludge	HW landfill, landfill
Spent Filter Clays	HW landfill, landfill HY land treatment, land treatment
Once-through Cooling Water Sludge	HW landfill, landfill
DAF Float	HW landfill, HW land treatment
Slop Oil Emulsions Solids	HW landfill, HW land treatment
Solids from Boiler Feedwater Treatment	HW landfill,* landfill
Cooling Tower Sludge	HW landfill, landfill
Exchanger Bundle Cleaning Sludge	HW landfill
Waste Bio-sludge	HW landfill, landfill HW land treatment, land treatment
Storm Water Silt	HW landfill, landfill
FCC Catalyst Fines	HW landfill, *landfill
Coke Fines	HW landfill, *landfill

HW means hazardous waste.

* HW landfill not normally required.

NOTE: HW landfills are sometimes used for added security and not necessarily because the wastes are deemed hazardous.

Incineration is desirable to reduce waste volume and to destroy organic wastes, even without energy recovery. Nonburnable wastes should be detoxified and neutralized to the greatest extent possible through physical, chemical, and biological treatment.

Chemical fixation is another special practice which is used in treatment of both liquid and solid wastes. Among the chemical fixation methods which are in use in the petroleum refining industry the most prevalent are (a) chemical coagulants to create an insoluble precipitate, (b) sorption of solvent-like hydrocarbons on imbiber beads, and (c) use of reagents such

as portland cement, lime, and flyash to produce a soil-like material. The use of a variety of chemical systems have been devised to overcome the fluidity of certain petroleum wastes. These chemical systems react with various components of the waste to form a semisolid material which effectively encapsulates or otherwise ties up the harmful constituents.

Landfilling is currently the most widely used method for disposing of all types of petroleum refinery waste products. The environmental adequacy of this method is contingent not only upon the types and characteristics of generated wastes, but also upon methods of operation and on specific site geologic ~~and climatologic~~ conditions. Of all the land disposal methods used by the refining industry, perhaps the greatest variations in operations and in site suitability are experienced with landfills. Landfilling operations range from open dumping of construction and refinery debris to controlled disposal in secure landfills. However, the precise impact of solid waste disposal depends on the nature of the waste (inert construction waste may not pose a problem even in an open dump) and the landfill (secure landfills involve control of run-on, run-off, leachate, etc.).

The environmental adequacy of a refinery waste landfill is affected by the following operational and management practices:

- The extent of segregation of wastes to prevent mixing of incompatible compounds, such as solids containing heavy metals with acids, or solutions with other wastes which together produce explosions, heat, or noxious gases
- The extent to which liquid or semiliquid wastes are blended with soil or refuse materials to suitably absorb their moisture content and reduce their fluid mobility within the landfill.
- The extent to which acids or caustic sludges are neutralized to minimize their reactivity.
- Selection of sites in which the active fill area is large enough to allow efficient truck discharging operations, as well as to assure that blended wastes may be spread, compacted, and covered daily with approximately six inches of cover soil; a site operated in this manner is called a sanitary landfill.
- The routing of surface waters around the landfill site, prevention of storm water run-on, and collection of storm water run-off.

Land treatment systems have been used for the treatment of petroleum industry wastes for many years. Land treatment is a managed technology that involves the controlled application of a waste on the soil surface and the incorporation of the waste into the upper soil zone. It is not the indiscriminate dumping of waste on land. Land treatment differs from landfilling. Landfills store wastes in manmade or natural excavations and use a combination of liners and leachate collection systems to control the migration of the landfilled waste or resultant by-products. Liners are not a part of a land treatment system. The land treatment waste management technology relies on the dynamic physical, chemical, and biological processes occurring in the soil. As a result, the constituents in the applied wastes are degraded, immobilized, or transformed to environmentally acceptable components.

The land treatment of most petroleum industry wastes focuses on the breakdown of the oil fraction by aerobic microorganisms in the top layer of soil where oxygen is available. Metabolism in these organisms ultimately reduces the hydrocarbons to CO_2 and water.

The design and operation of a land treatment facility is based on sound scientific and engineering principles as well as on extensive practical field experience. A land treatment site is designed and operated (a) to maximize waste degradation and immobilization; (b) to minimize release of dust and volatile compounds as well as percolation of water soluble waste compounds; and (c) to control surface water run-off.

Generation and Management of Wastes and Secondary Materials

Petroleum Refining Performance
1989 Survey

AMERICAN PETROLEUM INSTITUTE

HEALTH AND ENVIRONMENTAL AFFAIRS DEPARTMENT

JUNE 1992

FORWARD

API PUBLICATIONS NECESSARILY ADDRESS PROBLEMS OF A GENERAL NATURE. WITH RESPECT TO PARTICULAR CIRCUMSTANCES, LOCAL, STATE AND FEDERAL LOWS AND REGULATIONS SHOULD BE REVIEWED.

API IS NOT UNDERTAKING TO MEET DUTIES OF EMPLOYERS, MANUFACTURERS OR SUPPLIERS TO WARN AND PROPERLY TRAIN AND EQUIP THEIR EMPLOYEES, AND OTHERS EXPOSED, CONCERNING HEALTH AND SAFETY RISKS AND PRECAUTIONS, NOR UNDERTAKING THEIR OBLIGATIONS UNDER LOCAL, STATE, OR FEDERAL LAWS.

NOTHING CONTAINED IN ANY API PUBLICATION IS TO BE CONSTRUED AS GRANTING ANY RIGHT, BY IMPLICATION OR OTHERWISE, FOR THE MANUFACTURE, SALE, OR USE OF ANY METHOD, APPARATUS, OR PRODUCT COVERED BY LETTERS PATENT. NEITHER SHOULD ANYTHING CONTAINED IN THE PUBLICATION BE CONSTRUED AS INSURING ANYONE AGAINST LIABILITY FOR INFRINGEMENT OF LETTERS PATENT.

Acknowledgements

API's Pollution Prevention Task Force sponsored this survey, which was directed by Barbara L. Bush, a Senior Regulatory Analyst in the Health and Environmental Affairs Department (HEAD). Other individuals who made significant contributions to the project include: Genevieve Laffly Murphy, in API's Refining Department, who served as liaison with the General Committee on Refining and the Committee on Refinery Environmental Control (CREC); Mark Hopkins from Chevron, the Chairman of the Solid Waste Survey Workgroup that stewarded the project; Gail Levine from SUMMATIONS, the prime contractor for the project; Wendy Sams in API's Information Systems that developed the automated version of the questionnaire; and Wendall Clark, the expert consultant on refining practices. This core group was assisted by staff members from API's Statistics Department, the Office of General Counsel and the Editorial and Special Issues Department.

TABLE OF CONTENTS

Executive Summary i

Introduction 1

Methodology 3
- Survey Design 3
- Data Collection 3
- Waste Minimization 5
- Automated Questionnaire 6
- Survey Administration 6
- Data Analysis 7

Results 9
- Response Rate 9
- Respondent Characteristics 9
- Total Waste Management Quantity 12
  - Waste Generation 12
  - Treatment Additives 15
  - Storage 15
  - Total Quantity of Waste Managed 16
- Source Reduction 18
- Waste Management 21
  - Recycling 21
  - Treatment 25
  - Land Treatment 29
  - Disposal 31
- Waste Minimization Programs 34

Discussion 35
- Waste Generation 35
- Source Reduction 38
- Waste Management 39

APPENDICES
- A - Questionnaire
- B - Statistical Procedures
- C - Summary of Source Reduction Activities
- D - Waste Management Summary Tables
- E - Summary of Waste Management Practices for Individual Waste Streams

TABLES

1 - Refining Waste Streams 4

2 - Estimated Wastes from the U.S. Refining Industry 14

3 - Number of Refineries Reporting Wastes 15

4 - Top-five Waste Streams Removed from Storage 16

5 - Top-five Waste Streams Placed into Storage 16

6 - Estimated Waste Quantities 17

7 - Summary of Source Reduction Achievements 18

8 - Methods of Calculating Source Reduction Achievements 19

9 - Summary of Source Reduction Activities 20

10 - Incentives for Source Reduction Activities 21

11 - Summary of Recycling Practices 22

12 - Estimated Quantities of Recycled Wastes 24

13 - Location of Recycling Activities 25

14 - Summary of Treatment Methods 26

15 - Estimated Quantities of Wastes Treated 28

16 - Location of Treatment Activities 29

17 - Estimated Quantities of Land Treated Wastes 30

18 - Summary of Disposal Practices 31

19 - Estimated Quantities of Wastes Eliminated by Disposal 32

20 - Location of Disposal Activities 33

21 - Sources of Variability in Waste Generation Rates 1987-1989 37

22 - Barriers to Source Reduction 38

FIGURES

A - Number of Respondents by Capacity Group 9

B - Distribution of Respondents by Location 10

C - Distribution of Respondents by Complexity 10

D - Distribution of Respondents by Age 11

E - Distribution of Respondents by Sewer Type 11

F - Waste Minimization Program Components 34

G - Wastes Generated: 1989 35

H - Wastes Generated: 1987-1989 36

I - Waste Management Practices: 1989 40

J - Waste Management Practices: 1987-1989 41

K - Management Practices for RCRA Hazardous Wastes 42

Executive Summary
1989 Survey

Each year, U.S. petroleum refineries process 650 million tons of crude oil as they create fuels and other petroleum products vital to the U.S. economy and way of life. Not much waste results -- less than 1 percent of those 650 million tons. Still, that amount of waste is a big number in its own right.

This is the third annual survey of wastes generated by U.S. petroleum refineries -- and how they handle those wastes. Conducted by the American Petroleum Institute, it is the only ongoing industry-wide effort of its kind. It is also the first to track "source reduction" in refineries -- preventing pollution by avoiding the creation of waste.

For this survey, *Generation and Management of Wastes and Secondary Materials: Petroleum Refining Performance,* API mailed questionnaires to 183 operating U. S. refineries. The 117 refineries that responded represent 74 percent of domestic refining capacity. This high response rate enabled API to develop industry-wide estimates with a high degree of confidence and statistical accuracy.

Wastes Generated

U.S. refineries generated roughly 16.3 million wet tons of wastes and secondary materials in 1989 -- about the same as in 1987 and 1988. The total includes non-hazardous and hazardous wastes (as classified under RCRA, the federal Resource Conservation and Recovery Act), byproducts, and other secondary materials.

The survey obtained information on 28 waste streams, grouped in six categories. As shown below, aqueous wastes constitute about two-thirds of the total. Four facilities (treated as outliers in the statistical analysis) generate nearly all of these wastes and dispose of them by injecting them into underground wells. In diminishing order of volume, the remaining wastes are oily sludges, chemicals, contaminated soils, "other," and spent catalysts.

Types of Wastes Generated
(millions of wet tons)

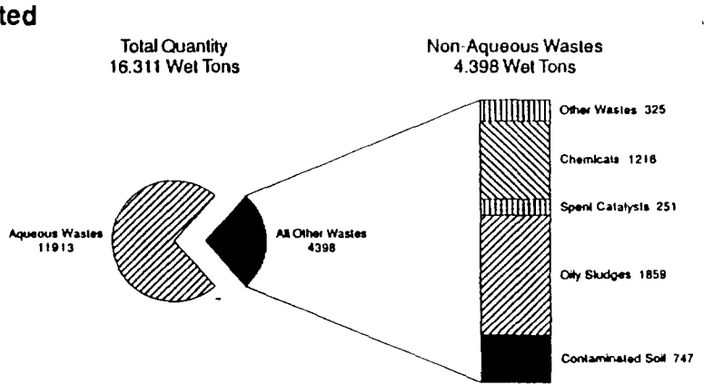

With the exception of contaminated soil, the amount of each type of waste has remained about the same since 1987. It appears that the amount of contaminated soil is on the rise -- most likely, a result of new construction at refineries and stepped-up efforts to clean up and remediate contamination from past releases.

Waste Management

The U.S. Environmental Protection Agency has created a waste management hierarchy that reflects the growing emphasis on reducing the amount of waste generated rather than than treating and disposing of it. The ranking (in general order of preference) is source reduction, recycling, treatment, and disposal.

Trends in handling petroleum refining wastes reflect the shift in emphasis in the waste management community at large. Of the 117 refineries that participated in the 1989 survey, 55 reported progress in source reduction. Their activities included technical and procedural modifications, in-process recycling, and improved housekeeping practices. Economic incentives such as lower treatment and disposal costs were the main reasons they undertook such source reduction activities.

Recycling of refinery wastes is also on the rise. Twenty-six percent of refineries' wastes were recycled in 1989, compared to 21 percent in 1987. In contrast, land farminsg has declined dramatically. It was used to dispose of 66 percent of refinery wastes in 1981 and 17 percent in 1987, but just 13 percent in 1989. As the illustration below shows, refineries use other waste management methods as well. In 1989, they eliminated 29 percent of their wastes through treatment and 32 percent through disposal -- about the same proportions as in 1987 and 1988.

Methods of Managing Wastes
(millions of wet tons)

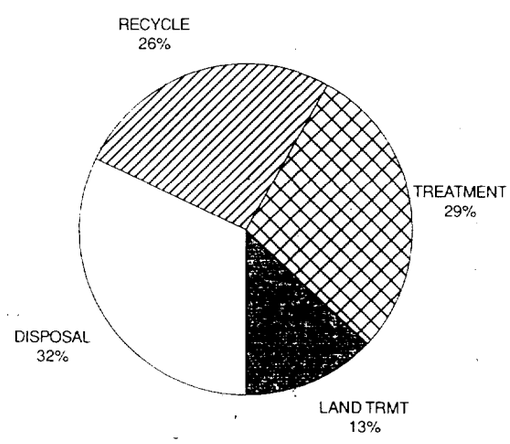

OUTLIERS REMOVED
5.263 WET TONS

Implications

API's waste management survey is a tool that quantifies the wastes petroleum refineries generate. It helps individual refineries assess their performance and monitor progress, while providing an overview of the industry's performance as a whole.

Now that three successive years of data are available, it is also possible to compare the performance of individual refineries and the industry as a whole over time. Here, "within facility" variations in amounts of wastes generated suggest that the industry-wide aggregated data give a false sense of stability.

Annual variations in generation quantities for specific waste streams at individual refineries are up to seven times greater than those of the industry as a whole. If additional observations validate this trend, it could lend support to the view that site-specific factors merit consideration -- especially, in regulatory decisions.

Introduction

Four years ago, API began chronicling the generation and management of wastes and secondary materials in the petroleum refining industry. Recognizing that one-time data collection would provide a snapshot that could not be used to reliably assess progress, API committed to analyzing at least four consecutive years of data.

In February 1991, the first two years of data were compiled and published in *The Generation and Management of Wastes and Secondary Materials in the Petroleum Refining Industry 1987-1988* (API publication number 849-30000). This report on 1989 data continues the series. Data for 1990 are now being collected and will be published separately.

The scope of the survey is broader than the Resource Conservation and Recovery Act (RCRA) regulatory definition of solid waste. API has collected data on a variety of materials, including hazardous and non-hazardous wastes *and* secondary materials sometimes considered byproducts or recyclable materials. The rationale for including both wastes and secondary materials in the survey is to characterize -- and quantify -- the non-fuel materials the refining industry generates and manages. Previous data collection efforts -- by regulatory agencies and the industry itself -- focused only on certain wastes; the resulting lack of comprehensive information impaired advocacy efforts and slowed the planning of pollution prevention initiatives.

The primary goal of the survey is to track the management of wastes and secondary materials from the point of generation. API has incorporated an integrated waste management hierarchy in the data collection forms -- classifying waste handling practices as source reduction, recycling, treatment or disposal. This conceptual framework acknowledges that a range of practices is needed to handle wastes, and that some practices are more desirable than others. It may also help the industry and individual refineries assess progress over time both in reducing the amount of waste generated and in handling those that remain in an environmentally sound manner.

The survey is an ambitious undertaking. In the area of waste -- where conventional wisdom holds that smaller is better -- a large industry essentially asked, "How much?" Petroleum refineries process some 15.7 million barrels of crude oil per per day -- 5.7 billion barrels or 650 million tons per year. Even if the waste from each barrel is small, the sheer volume results in a large number.

By amassing several years of data in an effort to create a reliable baseline, the industry risks being asked a second question, "How much less?" Here, the variability inherent in refineries' operating practices works against early detection of incremental progress in reducing wastes. One-time events such as turnarounds or shutting down surface impoundments create peaks in waste volumes that can mask the progress better management practices and source reduction activities achieve.

Simply by conducting the survey, API invites a third question, "What does it mean?" While many quantitative observations can be explained -- particularly where there are strong trends -- the reasons why other numbers increase or decrease are more elusive. Though some may never be entirely clear, additional measures over an extended period of time may identify more factors that influence generation rates and the magnitude of their effects.

Individual refineries have already reported that they find the survey a useful accounting tool for classifying and quantifying wastes. Having characterized their wastes, they may go on to compare themselves to the industry as a whole and target areas where change is needed. The aggregated survey data also provide a context for evaluating the impact of new regulations and reporting requirements. Though it takes two to three years to amass the data, API's information is more current and comprehensive than any other waste management database. Thus, the survey can also provide more reliable estimates of the impact of proposed regulatory changes.

Methodology

Since the 1989 survey largely replicates the 1987-1988 survey, the following discussion focuses on changes made to improve the quality of the data. For detailed information on general survey procedures, see *The Generation and Management of Wastes and Secondary Materials in the Petroleum Refining Industry: 1987-1988* (API publication number 849-30000).

Survey Design

This survey, like its predecessors, took a census approach. Using the Department of Energy's *1989 Petroleum Supply Annual* and API's *Entry and Exit in U.S. Petroleum Refining, 1948-1989,* the Institute updated its list of 176 operational refineries. The resulting population of 183 refineries used for the 1989 survey reflect the opening (under new ownership) of some refineries and the closing of others. Ninety-five companies owned the refineries; roughly a third were API members.

Data Collection

The survey questionnaire had two parts: 12 short-answer questions about the age, size and complexity of the refinery, the types of source reduction activities performed, and "data sheets" that captured quantitative information on generation of 28 types of wastes and secondary materials, and methods of managing them (see Appendix A).

The 1989 survey used the same list of 28 waste streams used in the 1987-1988 survey. As Table 1 on the next page shows, these waste streams are divided into six broad categories that reflect the typical grouping of wastes and secondary materials in a refinery (see Appendix A for the subcategories of each waste stream).

As a quality control measure, the data sheets balanced waste "inputs" and "outputs." As the illustration below shows, the inputs are quantity generated, treatment additives, and net from storage (the total amount of waste removed from storage minus the amount placed into storage). The outputs are quantity recycled, quantity treated, and quantity diposed.

Quantity Generated + Treatment Additives + Net From Storage = ***Total Quantity Managed***

Total Quantity Managed *= Quantity Recycled + Quantity Treated + Quantity Disposed*

To improve the consistency of the data collected, API made several changes in the data sheets. Respondents were asked to indicate whether wastes were generated on a routine or one-time basis and whether they had been dewatered. In addition, each data sheet included a simplified source reduction question that served largely as a consistency check with the source reduction questions in the short-answer section.

Table 1
Refining Waste Streams

Category	Constituents
Aqueous wastes	Biomass High pH/low pH waters Oil contaminated waters (not wastewaters)* Spent Stretford solution Spent sulfide solution Other aqueous wastes NOS**
Chemicals/inorganic wastes	Spent acids Spent caustics Waste amines Other inorganic wastes NOS**
Contaminated soils/solids	Contaminated soils/solids Heat exchanger bundle cleaning sludge*** Waste coke/carbon/charcoal Waste sulfur Other contaminated solids NOS**
Oily sludges/other organic wastes	API separator sludge*** DAF float*** Leaded tank bottoms*** Nonleaded tank bottoms Other separator sludges Pond sediments Slop oil emulsion solids*** Waste oils/spent solvents Other oily sludges/organic wastes NOS**
Spent catalysts	Fluid cracking catalyst Hydroprocessing catalyst Other spent catalysts NOS**
Other wastes	Other wastes NOS**

* Does not include NPDES or POTW wastewaters.
** Not otherwise specified.
*** RCRA-listed hazardous wastes for petroleum refining.

Waste Minimization

Congress mandated a waste minimization policy in 1984 amendments to RCRA, applying the term "waste minimization" to a variety of activities that reduce the amount of waste requiring disposal. The waste management hierarchy -- source reduction, recycling, treatment, and disposal -- illustrates how different activities at different points in the continuum work in concert to achieve this goal.

In the 1987-1988 survey, waste minimization questions focused on source reduction activities -- changes in practices that prevent generating wastes in the first place. Quality control edits of the data received, coupled with follow-up calls to respondents, indicated a need to clarify the meaning of "source reduction" and ways of calculating reductions in the quantities of waste managed (see Appendix D, summary of questionnaire development issues, 1987-1988 survey).

Some of the confusion regarding source reduction stems from the difficulty of measuring an unknown -- successfully preventing waste means that what is being measured no longer exists. Early instructional materials clouded the concept by suggesting that year-to-year reductions in wastes can be construed as source reduction. This is not necessarily the case: the reduction may simply be a normal fluctuation. For example, a refinery could have a major turnaround that creates peak quantities of waste. When wastes decline in subsequent years, the reason is not source reduction, but a return to usual operating conditions.

Another reason source reduction can be hard to measure is that refineries sometimes undertake activities that reduce wastes for reasons other than waste management -- to improve products or increase efficiency. Such practices include modifying equipment, technology or procedures, recycling within a process, and streamlining housekeeping practices. Although the main goal is to make a product more efficiently, a secondary benefit may be that wastes are also reduced.

In light of these considerations, the source reduction questions on the 1989 survey had implicit goals beyond the obvious objective of developing a quantitative profile of progress. Specifically, those goals were to:

- Promote understanding of the source reduction concept -- in particular, how activities other than feedstock substitution can reduce waste.
- Give respondents latitude in measuring progress so as not to arbitrarily influence their responses, yet enable quality control measures to ensure the comparability of data from year-to-year.
- Facilitate technology transfer and innovation by collecting descriptive information on the steps that resulted in waste reduction.

- Create a linkage with federal efforts to identify incentives for source reduction and eliminate barriers to innovation.

API met these goals by including a fairly long introductory passage; by asking respondents to use a six-point classification framework for source reduction activities and provide a narrative description of innovations made and methods used to measure the reduction; and by including questions drafted by EPA on incentives for -- and barriers to -- source reduction activities (see Appendix A, questions 9-12).

Automated Questionnaire

The automated version of the questionnaire was redesigned for the 1989 survey. To make the program faster and simpler to use, it was rewritten in Clipper™, a commercially available compiler for dBase™. The revised version had five menu-driven parts with quality control checks and "help" screens. API sent survey participants diskettes with their 1987 and 1988 data, and instructions on retrieving them for analysis; this allowed survey participants to create their own databases for site-specific analysis.

Survey Administration

API assured survey participants that the data for individual refineries would remain confidential, mailing survey materials to the headquarters of the refining branch of each company, which then distributed them to the refineries themselves. All materials were mailed by mid-October; eight weeks were allowed for response. About a month after the mailing of the materials, API made follow-up calls to refineries that had not previously participated in the survey. The purpose of these calls was to confirm receipt of the survey materials and to ascertain whether the refineries intended to complete them.

API retained the consulting services of an expert in refining practices, who staffed a "helpline" for survey-related questions. Survey participants were advised to contact the consultant to clarify technical issues. In addition, the consultant reviewed questionnaire items that automated edit checks identified as potentially out-of-range or inconsistent. The consultant resolved such problems with the contact person at the refinery in question.

Data Analysis

The 1989 survey used essentially the same data verification, non-respondent estimation, and extrapolation procedures as the 1987-1988 survey (see Appendix B). A summary of the main differences between the 1989 survey and the earlier survey follows.

With regard to data verification, the most substantive change was reducing the number of questionable data elements. The improved quality of the data was probably due to increased reliance on the automated questionnaire -- with its internal consistency checks -- and the "learning" effect generally associated with a second administration. In addition:

- Special efforts were made to verify generation quantities for four facilities identified as statistical "outliers" in the 1987 and 1988 surveys. Though three of these facilities were unable to participate in the 1989 survey, API telephoned them and verified that they were still following practices that resulted in the generation of comparable quantities of **aqueous wastes NOS**. Accordingly, the 1988 data for these refineries were used for the 1989 survey.

- Problems detected through edit checks -- for example, patterns of inconsistent reponses to questions about hazardous wastes and source reduction -- identified several questions that needed structural revision.

- Edit checks of the consistency in generation quantities between survey years were made both across and within facilities. They helped identify reasons for annual fluctuations in generation rates for various waste streams.

API used statistical models to estimate generation quantities for refineries that did not participate in the survey. The models developed for the 1987-1988 data were tested to determine their reliability, including a separate linear regression model for estimating waste generation as a function of capacity for refineries with less than 200,000 barrels per stream day (B/SD). A non-linear relationship between waste generation and capacity held true for refineries with more than 200,000 B/SD.

Although there were some differences between the 1987-1988 and 1989 surveys -- notably, 183 active refineries and 117 participants in 1989 versus 176 refineries and 115 participants in 1987-1988 -- the modeling procedures retained their validity. The R^2 for smaller refineries indicated that the model accounted for 43 percent of the variability in generation quantities, while the model for larger refineries accounted for 60 percent of the variability. An approximate 2 percent margin of error was estimated for the total waste generation quantity and an approximate 15 percent margin of error was estimated for the individual waste streams.

The extrapolation procedures used to calculate the amount of waste generated by the entire population of refineries was the same as that used in the 1987-1988 survey. API added estimates for the 66 non-responding facilities to the responses of the 117 participating facilities, performing successive calculations to create generation estimates for each waste stream and for each waste handling method. Unless otherwise specified, all data reported for the 1989 survey are estimates of wastes for all 183 refineries.

02

WASTE MINIMIZATION IN THE PETROLEUM INDUSTRY

A COMPENDIUM OF PRACTICES

102

Waste Minimization in the Petroleum Industry a Compendium of Practices

Health and Environmental Affairs

PUBLICATION NUMBER 3020

NOVEMBER 1991

American Petroleum Institute

Acknowledgements

This project was performed by the American Petroleum Institute (API) through the combined efforts of consultants, company representatives, and API staff. Mittelhauser Corporation, in conjunction with the API Waste Minimization Task Force, developed the concept and assembled the bulk of the document. R.G. Mattson brought additional marketing expertise to the project. Christina Griffin of Delta Analytical, Inc and Alan J. Senzel assisted in the technical edit of the report. Rick Stalzer of BP America, Don Hitchcock of Texaco, and Joel Robbins of Amoco made substantial contributions to the technical details. Barbara Bush of API's Health and Environmental Affairs Department served as Project Officer. The API Refining, Marketing, and Production Departments and Office of General Counsel provided essential review of the technical information which facilitated completion of the document.

FOREWORD

API publications necessarily address problems of a general nature. With respect to particular circumstances, local, state, and federal laws and regulations should be reviewed.

API is not undertaking to meet the duties of employers, manufacturers, or suppliers to warn and properly train and equip their employees, and others exposed, concerning health and safety risks and precautions, nor undertaking their obligations under local, state, or federal laws.

Nothing contained in any API publication is to be construed as granting any right, by implication or otherwise, for the manufacture, sale, or use of any method, apparatus, or product covered by letters patent. Neither should anything contained in the publication be construed as insuring anyone against liability for infringement of letters patent.

API makes no recommendations regarding the course of conduct that should be followed, and the reader is in no way bound to the findings of this study. The reader should exercise independent judgment that suits individual needs and must negotiate independently with the suppliers of any technology.

API makes no promises, claims, or recommendations as to the site specific applicability, performance, or economics of any technology described herein. The reader is cautioned regarding the interpretation of any references to "costs" or "cost effectiveness" as these references may not be applicable to his/her specific application.

This guideline may be used by anyone desiring to do so. Every effort has been made by the American Petroleum Institute to assure the accuracy and reliability of the material contained in it at the time in which it was written; however, the institute makes no representation, warranty, or guarantee in connection with the publication of this guideline and hereby expressly disclaims any liability or responsibility for loss or damage resulting from its use or for the violation of any federal, state or municipal regulation with which this guideline may conflict, nor does the institute undertake any duty to ensure its continued accuracy.

Preface

The American Petroleum Institute (API) sponsored the preparation of this document, "Waste Minimization in the Petroleum Industry: A Compendium of Practices", which summarizes many practices currently used in the exploration and production, refining, and marketing segments of the oil industry. Thirty-five industry respondents were surveyed to provide information on practices to minimize waste volume or toxicity. Additional information has been developed from literature review of practices in the oil, chemical, and utility industries. The regulation of many of the streams and practices contained in this report has been changing rapidly. Therefore, careful review of all federal, state, and local laws and regulations should be undertaken before implementation of any of the practices contained herein. The Compendium is intended to provide a summary of current practices and is not intended as a basis for regulatory compliance.

Executive Summary

In early 1988, the American Petroleum Institute undertook a project to develop this document, "Waste Minimization in the Petroleum Industry: A Compendium of Practices" for the production, refining, and marketing segments of the industry. The following pages demonstrate the petroleum industry's keen awareness of the importance of minimizing waste, a worldwide trend that represents the wave of the future for all industrial processes.

This Compendium focuses primarily on widespread practices to reduce the volume and toxicity of solid and liquid wastes generated by a multitude of operations and maintenance activities within the oil industry. Increasing costs and potential liabilities for disposal of wastes are providing ever-increasing pressure to develop cost effective means to minimize the amount of waste generated by every industrial facility. Indeed, minimization of waste has become an integral element of all good industrial waste management programs.

Waste minimization practices can generally be divided into three categories. First, eliminating as much waste as possible at the source of generation is a primary factor in ameliorating waste management problems. Second, recycling waste can have considerable economic benefits; in some cases, waste containing oil can be recycled back to operating units for recovery and/or conversion into saleable products. Third, treatment of waste can reduce its volume or toxicity and thereby help avoid high disposal costs. Treatment processes frequently recover oil for recycling and product water for reuse or disposal with normal wastewater effluent.

This Compendium reviews and summarizes the current state of the art in minimizing waste and reducing toxicity at oil industry facilities. Schematic diagrams of important processes are provided, and specific case histories with cost-benefit analyses are described in detail.

Increasingly stringent federal, state, and municipal regulations have provided opportunities and economic incentives for the petroleum industry to implement significant waste reduction programs. Large facilities must furnish biennial reports on their progress to the U.S. Environmental Protection Agency. Land disposal restrictions on listed refinery wastes require facilities to treat these wastes using Best Demonstrated Available Technology (BDAT) before placement on the land. Newly promulgated regulations are resulting in even more waste streams being characterized as hazardous.

This Compendium is intended to help API members meet current and future challenges with regard to minimizing waste in the petroleum industry. Clearly, as the complexity and cost of hazardous waste management and disposal increase, waste minimization efforts will become top priorities for all facilities in our industry.

Table of Contents

Foreward i

Preface ii

Executive Summary iii

Table of Contents iv

List of Figures viii

List of Case Studies ix

1 Introduction and Document Use 1
- 1.1 Background 1
  - 1.1.1 Questionnaire 1
  - 1.1.2 Literature Survey 1
- 1.2 Using this Document 1

2 Waste Minimization 3

3 Exploration and Production Waste Minimization 5
- 3.1 Design and Planning Considerations 5
- 3.2 Drilling and Workover Fluids 6
  - 3.2.1 Substitution of Drilling Fluid and Fluid Additives 7
  - 3.2.2 Oil Separation and Removal from Drilling Fluids 7
  - 3.2.3 Removal of Solids from Drilling Fluid 8
  - 3.2.4 Segregation and Reuse of Drilling and Workover/Completion Fluids 8
- 3.3 Oily Sludges from Production Activities 9
- 3.4 Solvents and Chemicals 10
  - 3.4.1 Amine Reclaiming 10
  - 3.4.2 Triethylene Glycol Reclaiming 11
  - 3.4.3 Saltwater-Contaminated DEA 11
  - 3.4.4 Purge Streams from Sulfur Removal 12
    - 3.4.4.1 Reclaiming/Recycling 13
    - 3.4.4.2 Conversion to Chelated Iron Processing 13
- 3.5 Miscellaneous Used Materials 13
  - 3.5.1 Empty Drums 13

3.5.2 Used Oils 14

4 Refining Waste Minimization Practices 16
4.1 Oily Sludges 16
4.1.1 Control of Solids into Wastewater System 17
4.1.1.1 Runoff Control 18
4.1.1.2 Control of Exchanger Bundle Cleaning Solids 19
4.1.1.3 Control of FCCU and Coke Fines 19
4.1.1.4 Minimizing of Fine Solids Recycling 20
4.1.2 Control of Surfactants in Wastewater System 22
4.1.3 Desalter Brine Treating 24
4.1.4 Filtration 25
4.1.4.1 Belt Filter Press 25
4.1.4.2 Recessed Chamber Pressure Filter (Plate Filter) 26
4.1.4.3 Rotary Vacuum Filter 27
4.1.5 Centrifugation 28
4.1.5.1 Scroll Centrifuges 28
4.1.5.2 Disc Centrifuge 29
4.1.5.3 System Design 29
4.1.6 Thermal Treatment 30
4.1.7 Sludge Coking 31
4.1.7.1 Quench Water Injection 31
4.1.7.2 Coking Cycle Injection 32
4.1.7.3 Blowdown Injection 32
4.2 Tank Bottoms 32
4.3 Fluid Catalytic Cracking Unit (FCCU) Decant Oil Sludge 34
4.4 Purge Stream from Tail Gas Treating 35
4.4.1 MDEA Conversion 35
4.4.2 ADA and Vanadium Recovery Process 36
4.5 Empty Drums 37
4.6 Slop Oils 37
4.7 Solvents 38
4.8 Spent Caustics 39
4.8.1 Recovery and Recycling of Phenols from Caustic 39
4.8.1.1 Off-Site Recycling 40
4.8.1.2 On-Site Recycling 40
4.8.2 Recycling Sulfitic Caustic 40
4.9 Spent Catalysts 41
4.9.1 Recycling to Metals Reclamation 41
4.9.2 Recycling to Cement 42

4.10 Spent Clay 42
4.11 Sandblast Media 42
4.11.1 Abrasive Blast Media 43
4.11.2 Copper Slag Abrasive with Recycling 43
4.11.3 Alumina Oxide Abrasive with Recycling 44
4.12 HF Sludge Media 44
4.12.1 Neutralization and Filtration 44
4.12.2 Production of Fluorspar 44
4.13 Cooling Tower Blowdown 45
4.13.1 Minimizing the Quantity of Cooling Tower Blowdown 45
4.13.2 Minimizing the Toxicity of Cooling Tower Blowdown 47
4.14 Miscellaneous Wastewater System Wastes 47
4.14.1 Replace Phenol Extraction 48
4.14.2 Changing Coagulation Chemical 48
4.14.3 Stormwater Diversion and Reuse 49

5 Marketing Waste Minimization 81
5.1 General Procedures for all Marketing Facilities 81
5.2 Classification of Marketing Segment Facilities 82
5.3 Refined Product Storage and Distribution Terminals and Bulk Plants 82
5.3.1 Terminal and Bulk Plant Yard Areas 82
5.3.1.1 Stormwater Runoff 83
5.3.1.2 Filter Separators 83
5.3.1.3 Air Eliminators 83
5.3.1.4 Loading Racks 84
5.3.1.5 Product Pump-off and/or Truck Unloading 84
5.3.1.6 Tank Car Unloading 85
5.3.1.7 Empty Drum Storage 85
5.3.2 Truck Maintenance Bays 85
5.3.2.1 Antifreeze (See also Section 5.5.5) . . . 86
5.3.2.2 Solvents (See also Section 5.5.6) 86
5.3.2.3 Used Oil (See also Section 5.5.4) 86
5.3.2.4 Floor Cleaners (See also Section 5.4.2) 86
5.3.2.5 Truck Washing (See also Section 5.5.3) 87
5.3.2.6 Aluminum Brighteners 87
5.3.3 Tank Basins 88
5.3.3.1 Tank Water Draining 88
5.3.3.2 Sample House 89

5.3.3.3 Additive Injection Facilities 89
5.3.3.4 Tank Cleaning 90
5.3.4 Alcohols 91
5.3.5 Marine Docks 91
5.3.5.1 Dock Product Transfer Areas 91
5.3.5.2 Sanitary Waste 92
5.3.5.3 Ballast Water 92
5.3.5.4 Package Storage 92
5.4 Complex Marketing Terminals 93
5.4.1 Boiler Blowdown 95
5.4.2 Floor Cleaning 95
5.4.3 Used Oil 96
5.4.4 Loading Rack Slab Washing 96
5.4.5 Sludges from Separator and Sumps 96
5.4.6 Slop Oil and Commingled Product 97
5.4.7 Lube and Grease Manufacturing 97
5.4.8 Solvents (See also Sections 5.3.2.2 and 5.5.6) . . . 98
5.4.9 Sampling and Laboratory Wastes 98
5.5 Retail Facilities (Service Stations, Fast Lubes, C-Stores and Truck Stops) 99
5.5.1 Underground Leaks and Product Spills 100
5.5.2 Underground Tank Water Bottoms 101
5.5.3 Car Wash (See also Section 5.3.2.5) 101
5.5.4 Used Oil (See also Section 5.3.2.3) 102
5.5.5 Antifreeze (See also Section 5.4.2.1) 102
5.5.6 Solvents (See also Sections 5.3.2.2 and 5.4.8) . . 102
5.5.7 Tires 103
5.5.8 Batteries 103
5.5.9 Oily Solid Waste (Filters, Sumps, Rags, Empty Containers and Absorbent) 103

Bibliography 108

Appendix A Questionnaire and Instructions A-1

Appendix B Letter of Transmittal for Production, Refining and Marketing B-1

List of Figures

Figure 4.1-1: Typical Refinery Solids Recycle Loop 50
Figure 4.1-2: Integration of Sludge Treating Unit into Refinery Operation 51
Figure 4.1-3: Desalter Brine Treating Unit 52
Figure 4.1-4: Belt Filter Block Press Flow Diagram 53
Figure 4.1-5: Plate Filter Press Block Flow Diagram 54
Figure 4.1-6: Cross Section Diagram Recessed Plate Filter 55
Figure 4.1-7: Rotary Vacuum Filter Block Flow 56
Figure 4.1-8: Operation of a Horizontal Scroll Centrifuge 57
Figure 4.1-9: Operation of a Disc Centrifuge 58
Figure 4.1-10: Thermal Treatment Block Flow Diagram 59
Figure 4.1-11: Process Flow Diagram Quench Water Injection 60
Figure 4.1-12: Process Flow Diagram Coking Cycle Injection 61
Figure 4.1-13: Process Flow Diagram Blowdown Injection 62
Figure 4.3-1: FCCU Decant Oil Catalyst Removal System Block Flow Diagram 63
Figure 4.4-1: Recovery Process Block Flow Diagram 64
Figure 4.8-1: Phenol in Gasoline 65
Figure 4.8-2: Phenolic Caustic Treatment 66
Figure 4.13-1: A Simplified Schematic of a Cooling Tower 67
Figure C-4-4: Deoiling of Desalter Effluent 74
Figure C-4-7: Sludge Coking Process 78
Figure C-5-1: Asphalt Waste Recycling 106

List of Case Studies

Case Study 3-1: Filter Press 15
Case Study 4-1: Street Sweeper to Reduce Oily Sludges 68
Case Study 4-2: Reuse of FCC Fines 69
Case Study 4-3: Alternative Sandblast Media and Recycle 70
Case Study 4-4: Deoiling of Desalter Effluent 72
Case Study 4-5: Screening of Solids from Exchanger Cleaning 75
Case Study 4-6: Spent Jet Fuel Treater Clay Deoiling 76
Case Study 4-7: Sludge Coking 77
Case Study 4-8: Chemical Recovery Process 79
Case Study 5-1: Asphalt Waste Recycling 104
Case Study 5-2: Recycling of Soap Dust Waste 107

1 Introduction and Document Use

1.1 Background

Information from several sources was assembled to form this Compendium. A survey of API members was conducted using a questionnaire developed to gather practical information on actual practices. Additional information was obtained from literature sources such as technical papers from symposia and journals as well as various trade associations. A bibliography of these documents is presented just before the appendices. Those who worked on the preparation of the Compendium drew upon first-hand knowledge regarding waste minimization practices.

The Compendium was prepared to present the information in a form suitable for quick reference by top management and field personnel alike. The waste practices are presented according to the type of waste in question. In addition to descriptions of the practices, flow diagrams and case studies are shown where available.

1.1.1 Questionnaire

A questionnaire was distributed to a representative cross-section of API's members to develop information on minimization practices that are currently implemented in routine operations. This questionnaire covered information on facility size, waste quantity and characteristics, and descriptions of the waste minimization practices utilized. A copy of the questionnaire and the instructions for completing it are presented in Appendix A. Copies of transmittal letters sent to production, refining, or marketing facilities are attached in Appendix B.

1.1.2 Literature Survey

A literature survey was conducted to augment the information developed from the questionnaire. The literature search included reviewing published documents from a number of oil industry associations such as API, Western States Petroleum Association (formerly Western Oil and Gas Association), National Petroleum Refiners Association, Petroleum Association for Conservation of the Canadian Environment, and the U.S. Environmental Protection Agency. Additionally, literature from related industries and associations such as the Chemical Manufacturers Association was reviewed to determine those waste minimization practices that could potentially be applied in the oil industry.

1.2 Using this Document

The Compendium addresses practices and procedures for minimizing waste in the petroleum industry. It assumes that the reader has a basic understanding of relevant

regulations applying to the treatment and disposal of any waste generated and it does not attempt to discuss these in any detail.

The Compendium is divided into sections and subsections[1] as follows:

Section 2:	Waste Minimization. This section gives a general introduction to the concept of waste minimization. It describes background and the definitions of terms important in waste minimization: source reduction, recycling, treatment, and disposal.
Section 3:	Exploration and Production Waste Minimization.
Section 4:	Refining Waste Minimization Practices. (This section includes diagrams that illustrate how specific waste minimization measures operate or can be used.)
Section 5:	Marketing Waste Minimization.
Bibliography:	Provides the references that a reader can consult for further information.
Appendix A:	Questionnaires. (See description under background above.)
Appendix B:	Letters. (See description under background above.)

[1] NOTE: Sections 3, 4, and 5 are divided into numerous subsections describing techniques that can be used to reduce waste in specific activities within the sector. In addition, case studies and, where appropriate, diagrams are at the end of each section.

2 Waste Minimization

The concept of waste minimization became a more prominent part of waste management in 1984, when Congress reauthorized the Resource Conservation and Recovery Act (RCRA) with the Hazardous and Solid Waste Amendments (HSWA) and set forth the following policy with respect to the minimization of hazardous waste (Section 1003(b)):

> The Congress hereby declares it to be the national policy of the United States that whenever feasible, the generation of hazardous waste is to be reduced or eliminated as expeditiously as possible. Waste that is nevertheless generated should be treated, stored, or disposed of so as to minimize the present and future threat to human health and the environment.

In its 1986 Report to Congress on the Minimization of Hazardous Waste, EPA clearly defined waste minimization to mean:

> [T]he reduction, to the extent feasible, of hazardous waste that is generated or subsequently treated, stored, or disposed of. It includes any source reduction or recycling activity undertaken by a generator that results in either (1) the reduction of total volume or quantity of hazardous waste, or (2) the reduction of toxicity of hazardous waste, or both, so long as the reduction is consistent with the goal of minimizing present and future threats to human health and the environment.

Subsequent to the publication of the Report to Congress, EPA specially adopted and encouraged use of an integrated waste management hierarchy to solve solid waste generation and management problems. The hierarchy consists of a series of management options, namely source reduction, recycling, treatment, and disposal, that can be used to manage waste streams. The hierarchy concept implies that the management options are ranked in order of preference. The use of the term "integrated" implies that all of the management options work together to form a complete system for proper management of waste. API supports the use of an integrated waste management hierarchy because all of the "steps" embodied in the hierarchy are recognized as necessary to reduce the volume and toxicity of waste. While source reduction and recycling are clearly the preferred management options, the hierarchy allows for flexibility in selecting a mix of control technologies. The applicability of each of the management options in waste reduction will be dictated by the diversity of site-specific industrial and waste management operations as well as the feasibility and cost of the various options available.

Implementation of a waste minimization program usually follows the hierarchial sequence of source reduction, recycling, and treatment. Listed below are the preferred steps in the integrated waste management hierarchy and the generally accepted definitions of these steps as typically seen in the literature.

Source Reduction:

Source reduction refers to the reduction or elimination of waste generation at the source, usually within a process. Source reduction measures can include types of treatment processes, but they also include process modification, feedstock substitutions or improvements in feedstock purity, various housekeeping and management practices, increases in the efficiency of machinery, and even recycling within a process. Source reduction implies any action that reduces the amount of waste generated by a process.

Recycling:

Recycling refers to the use or reuse of a waste as an effective substitute for a commercial product, or as an ingredient or feedstock in an industrial process. It also refers to the reclamation of useful constituent fractions within a waste material or removal of contaminants from a waste to allow it to be reused. Recycling implies use, reuse, or reclamation of a waste either on-site or off-site after it is generated by a particular process.

Treatment:

Treatment refers to methods, techniques or processes that are designed to change the physical, chemical, or biological character of hazardous waste in order to render the waste non-hazardous or less hazardous. Treatment implies actions that render waste safer to transport, dispose, or store.

Disposal:

Disposal refers to the discharge, deposit, injection, dumping, spilling, leaking, or placing of any waste into or on land or water.

118

3 Exploration and Production Waste Minimization

The purpose of the exploration and production segment of the oil industry is to discover and deliver crude oil and gas to the earth's surface for transportation to refiners and users. The drilling of oil and gas wells and their subsequent long-term operation to produce crude oil are the main activities in this part of the oil industry.

The primary wastes generated during the drilling of oil and gas wells are drilling fluids and cuttings. The wastes generated by production of oil and gas are produced water and oily sludges. Secondary wastes such as used oil, drums, and chemicals are contributed from both drilling and production operations.

This section of the Compendium provides a description of fundamental concepts for waste minimization and some examples of specific practices where successful reduction of waste is being accomplished. Areas covered include the following:

- Design and planning considerations
- Drilling and workover fluids
- Oily sludges
- Solvents and chemicals
- Miscellaneous used materials

3.1 Design and Planning Considerations

The initial design of well sites and producing facilities often include review of waste generation and disposal practices. Planning and development of exploration and production wells, sites, and facilities can have significant impact on reducing the amount of waste generated. The design considerations and operating procedures discussed in the remainder of this subsection are examples of design approaches that will reduce waste.

The amount of waste generated during the drilling process is directly related to the size and the depth of the hole drilled. Generation of such waste will be minimized by keeping the hole drilled as near the diameter of the drill bit as possible. Drilling fluids that minimize reaction with the drilled formations and wellbore hydraulics that reduce borehole erosion are used to prevent enlargement of the hole.

The layout of the drilling site can significantly affect the amount of waste generated. Some drill sites are designed to divert rainwater and snow runoff away from reserve pits, thus reducing waste fluid volumes. Some locations that are environmentally sensitive or have a limited amount of land available use a single drill site to drill single or multiple wells directionally. Liquid/solids separation equipment is commonly used to remove drill cuttings from the drilling fluid. Use of vibrating screens, hydrocyclones, and centrifuges extends the usable life of the drilling fluid.

The volume of the fluid stream (oil, water and gas) received by production facilities is dependent upon reservoir pressure mechanisms, the method by which the well is completed, and the production rate of the well. These factors also have an impact on the waste components of the fluid stream, such as silt, sand, and water. Gravel packing and screens can reduce the amount of silt and sand solids produced by a well.

Generally, the design and rate of injection on enhanced oil recovery (EOR) projects can significantly improve the oil/water/solids ratio. The generation of waste solids will be limited by ensuring that water used for water floods is chemically compatible with the formation waters and formation layers. Chemical balancing of the injection water with the formation water can limit the formation of precipitates such as barium, calcium, and magnesium sulfates and calcium carbonates, thus reducing the degree of clay shrinkage that eventually causes fine solids to be carried along with the produced fluids. In steam floods, agents can be added to the steam and water prior to injection to promote separation of oil from the formation fines.

3.2 Drilling and Workover Fluids

Drilling and workover/completion fluids comprise the largest category of wastes generated during the development of oil and gas wells. Drilling fluids must remove cuttings, keep the hole stable, and contain formation pressures without damaging the producing capacity of the reservoir. The cost of making up these fluids and disposing of them are driving forces for reducing the amount of drilling fluid needed, and for recycling and reusing drilling fluids whenever possible.

Drilling fluids are disposed either because of excess volumes from casing and cementing operations or because of contamination from drilled formation solids or fluids. The required volume of drilling fluid will change during the drilling operation. For example, when casing is run and cemented in a newly drilled hole, the required drilling fluid volume is reduced and the displaced fluid becomes surplus. Also, during drilling, different geologic zones are encountered which usually require alteration of drilling fluids and/or their chemical/physical properties. Drilling fluids are often completely replaced at critical geological junctions or are altered with additives in response to dynamic hole conditions. Complete drilling fluid replacement will generate large volumes of excess fluid which may be stored for future use or, more typically, disposed.

Contamination can also result in the need to dispose of some or all of the existing volume of drilling fluid. Common contaminants are dissoluble formation salts such as gypsum, sodium and potassium chloride, and anhydrite. Occasionally, the concentration of drill cutting solids in the drilling fluid will rise to the point that treatment or disposal of the fluid is necessary before drilling can resume. Other activities, such as cementing wells or drilling out cement plugs, can cause contamination of the drilling fluid and render it unusable.

Alternative operating procedures used in the industry to minimize the volume or toxicity of waste drilling fluids are described in the following subsections.

3.2.1 Substitution of Drilling Fluid and Fluid Additives

In response to environmental and regulatory trends, the drilling fluid industry has tested many fluids and has verified that a large number are not toxic at recommended use concentrations. In addition, the industry has developed several alternative drilling fluid systems that minimize the impact on the environment. Alternative drilling fluids and additives include:

- Chrome-free lignosulfonates and polysaccharide polymers to replace chrome lignosulfonates for reducing drilling fluid viscosity.
- Effective lubricants such as lubra beads and gilsonite-based additives to replace diesel oil.
- Isothiazoline and amines to replace pentachlorophenols and paraformaldehyde as biocides.
- Mineral oil in place of diesel oil as an effective substitute for stuck pipe spotting fluids.
- Low solids nondispersed drilling fluid systems to replace dispersed systems which typically require large volumes of water.
- Sulfite and organic phosphate corrosion inhibitors to replace chromate corrosion inhibitors.

3.2.2 Oil Separation and Removal from Drilling Fluids

In water-based drilling fluids, the oil component of the circulating fluid is usually quite low, less than five percent by volume. Oil can enter the circulation fluid system from drill cuttings, from oil reservoir fluids which enter the well bore when fluid hydrostatic pressure is less than reservoir pressure, or from occasional addition of oil to the drilling fluid system to achieve higher lubricity.

Oil that has been added as a pill (a small, 20 to 50 barrel slug) can often be separated by diverting the annulus stream into separate tanks at the time it returns to the surface. Oil that has entered the system from the well bore is not as easily removed. Some oil will be emulsified in the drilling fluid where it does not normally create a disposal problem.

Oil that rises to the surface of the drilling fluid reserve pit can cause disposal and treatment difficulties. This oil is removed by skimming it off with vacuum trucks or by

using oil skimming devices. The reclaimed oil can be recycled to the production process for eventual sale.

3.2.3 Removal of Solids from Drilling Fluid

The primary function of solids control equipment is to separate drilled formation solids/cuttings from drilling fluid. Principal pieces of equipment used to remove formation solids from fluids include the following:

- Shale shakers
- Desanders
- Desilters
- Mud cleaners
- Centrifuges

Most of these solids control devices provide relatively dry solids for disposal. Solids are on the order of 30 percent water by weight. Optimal use of liquid/solids separation equipment greatly reduces waste fluid volumes and maximizes the useful life of drilling and workover/completion fluids.

Drilling fluid dilution, as a result of poor solids control, leads to increased fluid volume and will increase the amount of fluid that must eventually be discarded. In some cases, there may not be an alternative to diluting a drilling fluid. Usually, however, chemicals are used in conjunction with the solids control equipment to eliminate the need for dilution water that adds to waste volume.

With advances in solids control equipment and chemical additives and the use of additional storage tanks, some drill sites have instituted a closed loop system in which drilling fluid is processed by a sophisticated application of solids removal equipment. The equipment can include a centrifuge/polymer flocculation process which completely separates the drilling fluid into liquid and solid components. The liquid component is reused for the makeup of new drilling fluid or for washdown operations on the drilling rig. This process can reduce the volumes of waste that are generated under drilling. However, it is not feasible in many situations.

3.2.4 Segregation and Reuse of Drilling and Workover/Completion Fluids

The segregation and reuse of drilling and workover/completion fluids has been a long-standing practice in the oil and gas industry. The trend is growing with the industry's continuing effort to reduce waste and the cost of disposal.

Many circulating fluids can be segregated into components and reused. Restoration and reuse of the fluids may be accomplished either on-site or off-site.

On-site restoration and reuse is usually limited to water-based drilling fluids and workover/completion fluids. On-site restoration relies primarily on solids control equipment which is normally provided by a contractor. Specialized equipment may be brought to the site for further refinements. Sock filters or centrifuges and/or filter presses are particularly beneficial for removing solids from completion and workover fluids, which are often required to be nearly solids-free. On-site restoration is common on offshore platforms because the drilling fluid can often be used on the next well to be drilled. Similarly, the drilling fluids from the intermediate and production section of the borehole can be segregated, restored, and reused on other wells.

Sometimes drilling fluid is processed and used strictly for its water content. Separated water can be used to make up new drilling fluids or be used as rig wash water.

Barite is another component that can be reused in the drilling fluid system. Centrifuges are often used to recover barite from barite-weighted drilling fluids both to prolong fluid usefulness and for fluids that are destined for disposal.

Most drilling rigs are not equipped to restore oil-based circulating fluids completely or to store them for future use. Oil-based drilling fluids have a high oil content, are costly, and are typically returned to the original vendor. Vendors repurchase oil-based fluids from the operator with price reductions applied for entrained water and/or solids. In specialized plants, vendors remove the solids and prepare the oil-based fluid for resale.

3.3 Oily Sludges from Production Activities

Oily sludges will be generated any time production fluids are slowed sufficiently to allow produced sediments and/or water to settle. Fine solids that have entered the well bore, along with hydrocarbons and water, form a relatively stable colloid sludge as they are reduced and mixed through the production string and the surface handling system. Water and water/oil emulsions which have coated the fines tend to settle to the bottom of temporary storage tanks or separation devices. Once the sludges have formed they are not readily handled by most on-site production facilities. Examples of oily sludges include:

- Tank bottoms and emulsion layers
- Heater treater hay
- Flotation wastes
- Pigging wastes
- Water handling sludge

Production facilities employ various procedures to prevent, reduce, or recycle these oily sludges. For example, certain biphenyl-based chemical emulsifiers can be injected downhole to combine with the produced oil and water. When the produced fluid is brought to the surface, the crude oil more readily separates from the produced water

without forming emulsified sludges. In certain locations, third-party recyclers will take oily sludges for a reasonable fee and recover the oil content for recycling. These recyclers use centrifuges, heat, or filters to separate the oil, solids, and water. Other service contractors are available to set up at the production field and use transportable treatment units to remove oil and water from sludges and reduce the volume of disposable wastes.

Service contractors generally provide centrifuges or pressure filters to recover oil and water from the oily sludges described above. Producers usually provide portable or permanent tankage to accumulate the various oily sludges over a reasonable time. Because service contractors charge a fixed fee for setting up their equipment, it is usually cost-effective to accumulate a large volume of oily sludge before calling in a service contractor.

Various technologies available to separate oil and water from sludges are discussed in more detail in Sections 4.1.4 through 4.1.6 of this Compendium.

3.4 Solvents and Chemicals

Many of the large scale oil and gas production fields include substantial processing facilities to remove oil or gas impurities before pipeline transfer. These processes invariably employ chemicals and solvents that eventually require disposal. Procedures for handling these wastes are described below.

3.4.1 Amine Reclaiming

Various amine-based aqueous solutions are used in treating gas to remove hydrogen sulfide and carbon dioxide (acid gases). Examples include monoethanolamine (MEA), diethanolamine (DEA), and methyl-diethanolamine (MDEA) solutions. The solutions become contaminated with production field contaminants, corrosion products, reaction by-products and solvent degradation by-products. Continued use of the degraded solution results in operating problems and performance loss. Consequently, the solution must be regenerated, reclaimed, or disposed.

With the exception of MEA, reclamation of the solution has generally been considered impractical. DEA, for example, will degrade at the temperatures required to distill it at atmospheric pressure. As a consequence, these amine solutions are withdrawn from service and disposed as a chemical waste, usually through an injection well.

In some cases a CO_2 absorption reclaimer may be able to effectively reclaim high molecular weight amines such as DEA, MDEA, and diisopropylomine (DIPA). Hot CO_2 has the capacity to evaporate and absorb alkaline treating solvents and carry solvent vapor to a cooler where vapors are condensed back to a liquid and recovered. The evaporation can be accomplished at a temperature below the amine's degradation temperature.

The process uses a kettle-type heat exchanger with an oversize steam tube bundle designed to use 65 psig steam which maintains a kettle liquid temperature of about 280 degrees F. The CO_2 is preheated by overhead heat exchange. In the kettle, CO_2 absorbs solvent from the liquid surface. Solids in the amine solution are left to accumulate in the kettle. Saturated CO_2 containing solvent and water exits the kettle overhead and passes through heat exchange; solvent and water are then condensed.

3.4.2 Triethylene Glycol Reclaiming

Triethylene glycol (TEG) is used as a dehydrating agent to remove water. Following its use in field wellhead dehydrators, it is also used downstream following acid gas removal. TEG in wellhead dehydrators accumulates salt and should be replaced before the salt concentration reaches 5,000 ppm. TEG in gas plant dehydrators picks up solvent carried over from the acid gas removal step. The solvent decomposes in corrosive products at temperatures encountered in the TEG reconcentrator. Spent TEG is typically disposed of as a chemical waste.

TEG can be reclaimed using the same CO_2 absorption technology described above for reclaiming amines. In reclaiming TEG, 400 psig steam is used. The operation uses about 650 BTU steam and 50 cu ft of CO_2 per pound of TEG. The recovered glycol is a high quality product. Total operating costs are a fraction of glycol purchase costs.

In reclaiming glycol from wellhead dehydrators, it is recommended that the glycol be removed and transported to a stationary reclaimer.

3.4.3 Saltwater-Contaminated DEA

In gas production and treating operations, saltwater co-produced with the gas may slug the treating plant inlet separators and pass through the separators. It will then contaminate the solvent used in the downstream acid gas removal operation. Chloride concentrations as high as 25,000 ppm have been reported in diethanolamine (DEA) solutions used to remove CO_2 and H_2S.

At high chloride concentrations, DEA solutions foam and cause solution losses. In addition, residual salts build up on heater tubes, causing hot spots and tube ruptures. Hot chloride-DEA solutions are also corrosive. The common solution is to remove the entire solvent inventory and replace it with new solution.

Some gas plant operators have successfully addressed this problem by removing the chlorides with a strong base anion exchange resin in its hydroxyl form. The resin takes on chloride ion and gives up hydroxyl ion.

A side-stream of the circulating DEA solution is processed downflow through a resin bed where the chloride-hydroxyl ion exchange takes place. After passing through the resin

bed, the DEA is pumped back to the main amine system. The chloride ion concentration in the treated DEA from the resin bed is checked periodically. When the chloride concentration begins to increase, the resin bed is saturated and should be regenerated.

Regeneration consists of backwashing the resin bed with water to reclassify it and then regenerating with four percent caustic solution. The bed is flushed with water to remove remaining caustic.

Theoretical chloride removal is 2.61 lbs. chloride/cu. ft. resin. For practical operation, a design factor of 0.7 is suggested. The largest operating cost item is the caustic (about 7 lbs./cu. ft. resin). Water might be a cost item; large amounts of high-purity water or condensate (2 ppm maximum hardness) are recommended. Amine solution losses amounting to 0.14 gal./cu. ft. resin can be anticipated.

Costs to install and operate any particular system are going to be highly site-specific. They will depend upon chloride concentrations, solution purchase and disposal costs, and construction.

3.4.4 Purge Streams from Sulfur Removal

A variety of processes are sometimes used to remove H_2S in small gas treating applications, typically less than 10 long ton sulfur/day. These processes may also be used in large gas plants as part of a gas treatment unit behind a sulfur recovery unit.

One process involves direct liquid phase oxidation. H_2S is absorbed into an alkaline solution that contains oxidation chemicals odium metavanadate and the disodium salt of anthraquinone disulfonic acid (ADA). These chemicals oxidize the absorbed H_2S to elemental sulfur which is separated from the solution by froth flotation and mechanical means.

Some of the absorbed H_2S is oxidized to thiosulfate and sulfate salts. Because presence of the salts has deleterious effects on solution chemistry and corrosivity, the solution is purged when salt concentrations reach 250 gm/liter. Purging is accomplished either continuously or by dumping significant quantities of the solution inventory. A new solution must be made up to replace that which is purged. The purged solution is disposed of as a chemical waste or into a wastewater system. However, concerns about vanadium content, biological oxygen demand, and thiosulfate content are increasing disposal costs. In California, the waste is considered hazardous because of its vanadium content.

Refineries have a similar disposal problem when liquid phase oxidation is used for gas treatment. Gas treating plants that employ the process in conjunction with a sulfur recovery unit can consider the alternatives described in Section 4 as well as those presented below. The alternatives presented here are primarily applicable to small units, particularly those that do not operate in conjunction with a sulfur recovery plant.

3.4.4.1 Reclaiming/Recycling

The purged streams can be sent to a metal recovery plant. The plant receives and processes purge solution, recovers vanadium, oxidizes ADA, and converts thiosulfate to sulfate. The vanadium is sold as vanadium oxide.

The processing facilities are part of a plant designed to recover molybdenum, vanadium, aluminum, nickel, and cobalt from spent catalysts. The plant uses autoclaves, reactor tanks, thickeners, and filters for hydrometallurgical processing.

3.4.4.2 Conversion to Chelated Iron Processing

During the last ten years there have been important developments in the use of chelated iron chemistry for removing H_2S from gas streams. Some sulfur removal systems are now being converted to or replaced by a process using this type of technology. Chelated iron processes exhibit an order-of-magnitude lower production rate of by-product salts and yield a nontoxic solution that can be disposed of as a nonhazardous waste. The performance capability of chelated iron processes for removing H_2S is basically the same as that of traditional oxidation processes.

One of the chelated iron processes uses chelating agents to keep iron in solution. The H_2S is absorbed into a circulating solution where it is oxidized to elemental sulfur by the reduction of the iron. The iron is reoxidized in an air-blown oxidizer. The chemistry is similar to that of the vanadium-ADA process except that the oxidation-reduction functions provided by vanadium and ADA compounds are now provided by iron. The process has been used commercially and is considered a proven technology.

In 1987, a new chelated iron process that employs significantly higher iron concentrations came into use. The chemistry is the same except for differences in the use of chelating compounds. Because iron concentrations are so much higher, this process features markedly lower circulation rates and different gas-solution contacting equipment. The gas-solution contact device is described as a "pipeline contactor."

3.5 Miscellaneous Used Materials

A typical production operation will generate a wide variety of miscellaneous small volume wastes that need proper management to reduce cost and comply with local regulations. Examples of these wastes include empty drums, used oils, and used batteries.

3.5.1 Empty Drums

Reduction of waste drums is accomplished through changes in purchasing procedures, testing and reclassification of the residuals remaining in the drums, and on-site pH

neutralization of residuals in the drums. These procedures require coordination by those responsible for purchasing, accounting, environmental, and operating functions.

One minimization strategy is to change purchasing policies. Substitutes for hazardous chemicals that are purchased in drums are evaluated with the intent of replacing those chemicals with nonhazardous substitutes. Purchasing policies and instructions can be restated to require the use of the new nonhazardous chemicals.

Suppliers who recycle their own drums through a deposit system can be chosen over vendors who refuse to take back empty drums. In addition, purchase of materials in bulk is emphasized in lieu of drums. If bulk purchase creates a problem in outlying areas because of small usage, a central bulk storage area can be set up and an ongoing system to refill and distribute drums to the outlying areas can be implemented.

Another important part of this program can be to provide instructions for capping and segregating of drums after use. This practice has the added benefit of segregating drums that do not contain hazardous waste so they can be recycled as nonhazardous.

Another waste minimization practice entails neutralizing any acid and alkaline residues in certain drums on-site. A tank containing recyclable wash water can be used to rinse and remove both the acid and alkaline residues using a hose and catch basin that flows back into the wash water tank.

A final pH adjustment to assure compliance with water discharge requirements will be made on the wash tank. After testing verifies that there is no other hazardous material in the tank, the tank contents can be drained to the produced water system. The length of time the tank can be operated will be determined by monitoring pH and solids build-up. The rinsed drum is then recycled to a drum recycler as nonhazardous. On-site pH neutralization in fixed equipment may require a local permit.

3.5.2 Used Oils

A typical production field generates an array of intermittent waste oil streams, which can originate from such equipment as:

- Diesel driven engines
- Large equipment gear boxes
- Waste lube oils from vehicles
- Compressor lube oils

Some source reduction of these wastes has been possible through lube oil testing rather than draining of lube oils at arbitrary time intervals. Lube oil suppliers provide testing programs for field use which maximize the useful life of lube oils. Note that the regulation of used oil is in flux. Please consult federal, state, and local regulations.

Exploration and Production Waste Minimization
Case Study 3-1: Filter Press

Introduction

A West Coast production facility concerned about the cost of waste disposal evaluated several mechanical phase separation technologies. To reduce the amount of oily sludges disposed, a filter press was evaluated to segregate the oily waste into two phases, filtrate and cake. The filtrate would be further separated. Oil would be recovered from the filtrate and recycled to the crude. The water would be injected into the producing formation. The cake would eventually be disposed in an approved nonhazardous landfill.

Description of the Waste Minimization Process

Sludges from various process units and tanks were collected in a centralized tank. The oily sludge tank was kept agitated to prevent solids from settling. The sludge was pretreated with ferric chloride and lime, mixed and heated to 170 degrees F in a separate tank, and pumped to the 1500 mm press. The press was operated 24 hours a day, 350 days a year, approximately 9 cycles per day.

Effectiveness

The evaluation concluded that the filter press would reduce the volume of waste actually disposed from 44,900 barrels per year to 13,500 barrels per year or nearly 70%. Similarly, the weight of the material disposed was reduced by 62% from 9900 tons to 3700 tons per year, thereby decreasing annual disposal costs by $564,200 per year, inclusive of trucking costs. Additionally, approximately 81% of the oil in the sludge was recovered. At $15 per barrel, revenue from recovered oil represented an additional savings of $108,000 per year.

Costs

The capital cost for the filter press was estimated at approximately $3,000,000. Annual operating costs for the press were estimated at approximately $400,000 per year, including maintenance, chemicals, labor, and power.

The reduced volume of sludge decreased disposal costs by $564,000 per year. Oil recovered from the sludge was valued at $108,000 per year. The net savings is $272,000 per year. A cash flow analysis of the new system versus the old system was computed using a 12% discount rate and a 25% per year escalation in waste disposal costs. This analysis indicated that the capital cost of the new system would reach payout in 3.5 years.

4 Refining Waste Minimization Practices

This section of the Compendium contains a description of practices that can be used to minimize the generation of wastes and residuals produced by petroleum refinery operations. The waste minimization practices can be categorized as source reduction, recycling, or treatment. Some involve construction of capital equipment. Others may be implemented by changing operating or maintenance procedures.

Not all of the practices discussed in this section can be applied to all refineries. Every refinery is unique with a somewhat different process configuration and varying crude oil feedstock. As refinery configuration and crude characteristics vary, so will the applicability, effectiveness, and practicality of the waste minimization practices.

The wastes and residuals that are addressed in this section are:

- Oily sludges
- Tank bottoms
- Fluid Catalytic Cracking Unit (FCCU) decant oil sludge
- Leaded tank bottoms
- Stretford purge
- Empty drums
- Waste oils
- Solvents and chemicals
- Spent caustics
- Spent clays
- Sandblast media
- Hydrofluoric alkylation sludge
- Cooling tower blowdown
- Miscellaneous wastewater systems residuals

4.1 Oily Sludges

One of the higher-volume hazardous wastes generated by petroleum refineries is oily sludge. Oily sludges include the following:

- Slop oil emulsion solids
- Leaded tank bottoms
- API separator sludge
- Dissolved Air Flotation (DAF) float
- Heat exchanger bundle cleaning sludge

In addition to the above wastes, the category of oily sludges includes such wastes as tank bottoms and sludges which settle out in pond impoundments, drainage ditches, and sewer systems.

Oily sludges are emulsions formed because of a surface attraction among oily droplets, water droplets, and solid particles. If the solids are large and/or dense, the resultant material will settle and become a sludge. If the solids are smaller or less dense, the solid surface may result in a neutrally buoyant emulsion that will not settle.

The surface charge interactions between the solid particles and oil droplets cause the sludge to become stable and difficult to separate. Once stabilized, the sludge can be separated into its individual components by mechanically removing the solids or by neutralizing the surface charge on the solids and oil droplets.

All refinery emulsions are stabilized by solids and enhanced by surfactants that increase the attraction between oil droplets, water droplets, and solid particles.

Neutralizing the surface charge of an emulsion or sludge, using emulsion-breaking polymers alone, is almost impossible to accomplish on a continuous basis. The density and charge strength of emulsions will change almost daily, depending on the type of crude run and the quantity and type of surfactants and solids that are released into the refinery sewer system. One of the most effective ways to minimize the generation of sludges is to minimize the release of solids and surfactants into the refinery wastewater system. Other effective practices involve the use of equipment to recover oil for recycling, recycling of the entire sludge, and the following:

- Desalter Brine treating
- Filtration
- Centrifugation
- Thermal treatment
- Sludge coking

A brief discussion of each of these waste minimization practices for oily sludges follows.

4.1.1 Control of Solids into Wastewater System

Control of solids releases into the refinery wastewater sewer can be a very effective means of minimizing the generation of oily sludges. The solids content of refinery sludges varies from less than 5 percent to up to 30 percent. Using an example of a sludge that contains 10 percent solids, a reduction in one pound of solids released into the sewer system will eliminate the generation of 10 pounds of sludge. Therefore, the incentive for controlling solids releases into the wastewater system is significant. Minimization practices that can be used to reduce the quantity of solids released to refinery sewers include:

- Runoff control
- Control of exchanger bundle cleaning solids
- Control of FCCU and coker fines
- Minimization of fine solids recycling

4.1.1.1 Runoff Control

Stormwater runoff washes dust and surface solids into drainage collection basins. The runoff can come from large open areas around tank farms, fields, areas around maintenance shops and other buildings, process area equipment, and from roads that run throughout the refinery. Some newer refineries contain discrete sewer systems to handle process water separately from utility and stormwater runoff. Older refineries without segregated sewers will receive the greatest benefit from runoff control.

Runoff control practices being implemented by refiners to control solids releases include:

- Planting ground cover
- Paving/dust control
- Partial sewer segregation
- Use of a street sweeper
- Cleaning ditches

Much of the entrained solids in storm runoff results from surface dirt and dust. In most areas of the country that experience heavy intermittent rains, a considerable quantity of solids can be washed into the sewers. If ground cover is planted in areas around ditches, tank dikes, and nonprocess areas, it will act as a retainer to prevent solids from being washed into the sewers. The ground cover should be dense to provide maximum effectiveness.

Another option is to pave roads, ditches, and other areas so that the exposed soil is covered and will not add solids to the water in the sewers. To effectively reduce solids being washed into the sewer system, however, paved areas must be kept clean. Otherwise, dust and dirt that accumulate on roads during dry periods will be washed into sewers. In addition, runoff solids, particularly from a very heavy storm, will partially settle in ditches. The next storm will re-entrain some of the solids, and they will periodically settle and be re-entrained as they work their way through the refinery wastewater system. For that reason, once a road or ditch has been paved, vacuum systems or other types of street cleaners should be used periodically to keep the areas free of solids that might be washed into the sewers during a storm. Street cleaners can be operated by refinery maintenance staff, or the service can be purchased.

In some refineries, partial sewer segregation may be possible. There are typically large open areas around tank farms. Some refineries have open fields for future expansions. Runoff from these areas may eventually be routed to the process wastewater system.

Some of these areas may be isolated and routed to a stormwater impoundment where the water can be retained and tested prior to discharge in accordance with appropriate permits under the regulation on stormwater discharges.

Some refineries have several impoundments downstream of biological treatment for storage. One of these impoundments could be isolated and used to impound the stormwater. Where it would be impractical to completely retrofit a segregated stormwater system, it may be possible to isolate, into a separate system, selected streams that provide drainage for many acres. In addition, tank farms can be drained slowly after storms to prolong storage and minimize flow to the wastewater system. In some cases, separate direct discharges can be installed when water quality is good.

4.1.1.2 Control of Exchanger Bundle Cleaning Solids

Heat exchanger bundle cleaning solids constitute a RCRA-listed hazardous waste. Such solids are produced by cleaning heat exchanger bundles with high pressure water during unit maintenance, typically on a concrete pad that has been prepared for this purpose. In many refineries, the water and entrained solids are released into the refinery wastewater system. In such cases, the mixture of wastewater and heat exchange solids is not defined as a hazardous waste (see 40 CFR 261.3(a)(2)(iv)(C)).

One problem, however, is that exchanger solids may attract oil as they move through the sewer system and may also produce finer solids that are more difficult to remove. Some refiners have installed concrete overflow weirs around the surface drains on the exchanger bundle cleaning pad or have covered the drains with a screen to remove the solids from the pad. The solids must then be treated and disposed of in accordance with applicable requirements. The use of overflow weirs will probably have a minor impact on the overall quantity of sludges generated at a refinery. It may, however, reduce the generation of fine solids-stabilized emulsions that are difficult to treat.

It is best to prevent solids from forming, if possible. One widespread practice is the use of antifoulants on the heat exchanger bundles. Because antifoulants stop scale from forming, they are effective in reducing/eliminating exchanger cleaning sludge and minimizing the formation of a listed waste.

Chemical cleaning of the heat exchangers is another practice that can reduce sludge. These chemicals generate a solution allowing for the recovery of oil, thus reducing the volume of sludge. The chemicals generally can be reused.

4.1.1.3 Control of FCCU and Coke Fines

Fluid Catalytic Cracking Units (FCCUs) and delayed coking units both handle solids on a routine basis. The area around the equilibrium catalyst and the fresh catalyst hoppers in the FCCU can contain catalyst that has spilled during loading/unloading operations.

The area around the reactor and regenerator vessels can contain a significant quantity of catalyst during unit maintenance when both of these vessels are opened and cleaned for inspection and repair. Coking units can also have coke fines on the pad around the unit or in a coke storage building.

The simplest minimization practice is to instruct operations/maintenance staff to sweep catalyst and coke fines dry for recycling purposes. To make this practice effective, the refinery staff must understand its impact on waste management costs and refining economics.

An alternative method of removing catalyst and coke fines is to use a central vacuum system similar in concept to those used in homes. A building adjacent to the process unit pad would contain an explosion-proof blower and a small baghouse. Ducts would be run to dusty areas of the process unit with specified locations where sections of hose could be connected to the system to vacuum the solids. The bags would be removed periodically and sent either to recycling or to nonhazardous disposal. FCCU catalyst could be recycled to a cement manufacturer as discussed in Section 4.9.2. The coke could be recycled for fuel use.

As a result of weathering and wind, coke piles, conveyors, and transport of coke can also be a source of coke fines. Dust control chemicals applied to the coke will often reduce dust and migration of coke fines.

4.1.1.4 Minimizing of Fine Solids Recycling

As previously discussed, solids attract oil and water which results in the creation of an emulsion or a sludge. In addition to minimizing the release of solids into the wastewater system, solids should also be purged from the system.

Refineries typically have a solids recycling system that cannot be totally bypassed (see Figure 4.1-1). Solids enter the refinery with the crude charge as part of the bottom sediment and water (BS&W). The electrostatic desalter located on the crude unit should remove most of the solids, salts and water present in the crude oil.

Minimizing the introduction or recycling of solids or fine solids into the slop oil recycled to the crude unit ~~of Figure 4.1-1~~ will assist the reduction of these sludges. The solids will attract more oil and produce additional emulsions and sludges. The following waste minimization practices can help reduce solid levels:

- Reduction in the quantity of crude tank bottoms sent to the desalter.
- The use of a low shear mixing device to mix desalter wash water and crude.

- Avoiding turbulence in desalter vessels by using lower pressure water.

- Breaking the fine solids recycle loop between the wastewater and slop oil treating systems.

- Treating DAF float separately, rather than sending it to the slop oil system.

Treating desalter brine at the crude unit before its release into the wastewater system is another alternative for removing sludge (see Section 4.1.3).

Some of these practices can be particularly beneficial with certain crude oils. Crudes produced in the San Joaquin Valley of California tend to have a high concentration of surface-active organics, such as naphthenic and cresylic acids. When turbulently mixed with fine solids, these organics will produce emulsions.

Solids can settle out in crude storage tanks. If solids in crude storage are allowed to settle in the crude tanks, they do not add to solids loading in the desalter. Settling in the crude tanks also prevents these solids from eventually becoming listed as either API separator or slop oil emulsion solids. Infrequently, these tanks must be removed from service and cleaned. Crude tanks can be cleaned using heat and chemical treatments such that the oil in the solids can be recovered and run as slop, the water can be drawn off to the waste plant, and residual solids can be removed and disposed of in accordance with applicable requirements. (See also 4.2 on tank bottoms.)

An alternative that can increase the time between tank cleanings is to use static or variable angle tank mixers to homogenize the crude fed to the desalter.

High-shear mix valves used in many crude units to mix wash water and crude oil will create an additional emulsion. Low-shear, in-line static mixers or other low energy mixing devices will aid in the reduction of emulsion generation.

Solids that have settled in the desalter vessel must be moved to a boot where they are typically transferred to the wastewater sewer. Some desalters, however, contain high-pressure water jets that move the solids. Depending on the water spray angle and velocity, the spray can pick up solids from the desalter bottom and move them upward toward the oil/water interface. This process adds mixing to a vessel that should be kept quiescent, and it may create additional emulsions. Consideration should be given to replacing water jet sprays with mud rakes that move the solids without adding turbulence to the vessel.

Figure 4.1-2 shows a scheme for integrating sludge-treating equipment into refinery wastewater and slop oil systems to purge fine solids thereby reducing active solid sites

that can form an emulsion. In this example, the sludge-treating unit receives all of the solids-containing slop oil streams prior to slop oil treatment. A plate and frame filter press of the type described in Section 4.1.4 is particularly effective for this application. With the solids removed, the oil and water will separate. The solids that would normally be recycled are purged from the system with the filter cake. Significant savings can result from the elimination of slop oil-treating chemicals.

4.1.2 Control of Surfactants in Wastewater System

The uncontrolled or unnecessary addition of surfactants to the refinery sewer system will tend to increase the generation of emulsions and sludges. Surfactants cannot be eliminated from the system, but they can be effectively managed.

Surfactants such as naphthenic and cresylic acids occur naturally in crude oil. Surfactants present in desalter wash water will be released into the wastewater system at that point. Another source of surfactants is spent phenolic caustic produced by treating gasoline. Other surfactants that can be present in wastewater systems include detergents used to wash unit pads; equipment; and vehicles and organic polymers used to break emulsions or otherwise aid in oil/water separation.

One mechanism is to avoid the introduction of surfactants into an oily wastewater stream immediately upstream of a high-speed centrifugal pump. The shear in the pump will promote mixing of the solids and oil with the surfactant which will facilitate the formation of emulsions and sludges.

The effective minimization of surfactant releases into a refinery wastewater system will require a well planned and well communicated training program for operations and maintenance personnel.

Potential surfactant sources addressed in this compendium include:

- Unit pad detergent washing.
- Use of surfactants in wastewater system.
- Spent caustic produced by treating naphthas with an end point of over 400 degrees F.
- Vehicle cleaning.
- Miscellaneous soaps and cleaners used in lab and maintenance shop.

Detergents are sometimes used to clean oil stains and dirt from process unit concrete pads. Dirt should be swept up dry and removed. Detergents are usually necessary to maintain a safe working environment. However, their use in each plant should be reviewed carefully, and operators should be instructed to minimize the quantities used. Often, high-pressure water with steam can achieve satisfactory cleaning results without detergents.

Organic polymers are used in the wastewater system to aid in separating oil, water, and solids and to break emulsions. Polymers can be used in the following locations:

- Desalter feed to aid in oil/water separation.
- Dirty desalter wash water to separate some oil from the water prior to release in the wastewater system.
- API separator feed and/or air flotation unit feed to assist in oil/water separation.
- The slop oil treating unit to assist in breaking the emulsion and enhancing oil/water separation.

Although polymers are required to achieve optimum separation of oil/water/solids mixtures, the use of any one polymer must be carefully monitored to avoid counteracting the effectiveness of other polymers employed elsewhere in the wastewater system. Process engineers should attempt to minimize polymer usage because negative effects more commonly result from overuse of polymers than from under use.

Chemical vendors should justify every polymer used, and the responsible engineer should know the type, function, and recommended dosage of all polymers. Operators should also be trained to minimize polymer usage.

Another source of surfactants in a refinery wastewater system is spent phenolic caustics produced by treating gasolines with an end point of over 400 degrees F. Above this temperature, the concentration of acid oils such as phenolics, cresylics, and naphthenics increases significantly. These surface-active materials will function much like detergents to stabilize emulsions.

Spent phenolic caustic can be sold to a recycling organization that will recover the acid oils or the acid oils can be recovered at the refinery (see also Section 4.8).

Detergents are also used to clean tank trucks at the product loading rack and to wash company vehicles. In some refineries, it may be possible to route the wash water from the truck rack to a point downstream of the air flotation unit. In cases where the locations

of these two operations are too far apart, the personnel responsible for washing trucks should be trained to minimize detergent usage. (Steam + hot water)

4.1.3 Desalter Brine Treating

In some refineries, the desalter can add a significant quantity of oil and solids to the process wastewater system. Desalters in refineries with crude charge rates that have increased significantly over the years may tend to accumulate more oil in their wash water if the desalter vessel is undersized for current crude charge rates.

Solids content of desalter wash water is a function of feedstock, refinery configuration, and desalter operating mode. Even though a refinery continuously uses mixers to suspend settled material from the crude charge tanks and feeds the suspended solids to the desalter, there may be brief periods when the solids load from the desalter to the sewer is very high owing to the intermittent operation of the desalter's solids purge system.

Desalter brine produced at most refineries will not benefit from pretreatment; however, certain refineries that process heavy crudes with a specific gravity that approaches water, crudes with a high concentration of natural surfactants, and crudes with a high solids content, may benefit from desalter brine treatment.

Pretreatment of desalter brine prior to release to the process wastewater sewer may be undertaken to:

- Reduce solids load into the process wastewater sewer.
- Destabilize and separate the oil/water/solids emulsion present in desalter brine before it contributes to formation of additional emulsified material in the sewer.
- Reduce oil load to the wastewater sewer.
- Reduce the concentration of certain soluble organic constituents present in crude oil that may present treatment or discharge problems if not treated at the source.

Figure 4.1-3 shows a process flow sketch for a desalter brine treating unit. This system would treat a highly emulsified brine from processing a very heavy crude. All of the chemicals shown would not always be required.

The brine is first mixed with a naphtha to reduce the relative density of the oil so that it will separate faster. This treatment is useful for crudes with an API gravity close to that of water. If there is an emulsion in the brine, organic polymers can be used to aid in

breaking the emulsion; however, the performance of such polymers may vary considerably as crude characteristics change (See Section 4.1.2).

If considerable emulsified material is present in the brine and polymers are found to be ineffective, then the surface charge on the solids can be neutralized by adding acid to reduce the pH to around 2.0. The reduced pH, along with the addition of naphtha, should allow a relatively good separation of the oil, water, and solid phases.

The chemical additives are mixed with the brine prior to its being sent to a separator vessel. Figure 4.1-3 shows a separate mixer vessel with slowly moving paddles, but an in-line static mixer can also be used. The mixing device must provide the desired contact with minimal shear to be effective.

The separator vessel can be a simple one, sized to provide the residence time needed for phase separation. A corrugated plate separator can be installed in the vessel to increase greatly the effective residence time. Two refineries have used a separator vessel that contains electrical equipment similar to the electrostatic desalter. The electrostatic field maintains a sharp oil/water interface and assists in the phase separation process.

In some cases, solids can be withdrawn with the water from the bottom of the vessel.

4.1.4 Filtration

Filtration is a mechanical separation technique that is very effective for reducing waste volume and for recycling oil. Filtration is attractive for listed wastes because it is convenient to implement, it reduces waste volumes, and it can be permitted readily in most areas. Belt filter presses, recessed chamber pressure filters, and rotary vacuum filters are described in detail below.

4.1.4.1 Belt Filter Press

A belt filter operation consists of a belt filter press, upstream facilities to handle and condition oily waste, and downstream facilities to separate oil and water and take away the filter cake. Figure 4.1-4 is a block flow diagram for a belt filter installation.

A high molecular weight polymer (polyelectrolyte) is normally added to the sludge prior to filtration in a belt filter in order to neutralize the electrochemical forces that bind the emulsion, promote the release of oil and water, and coagulate the solids.

Initially, the raw feed is mixed with a polymer to cause flocculation of solids and enhance separation of the liquid phase. The preconditioned feed is then distributed to a porous, woven belt where the gravity phase of liquid/solids separation occurs. Free liquid flows through the porous belt by gravity into filtrate collections pans. Up to 40 percent of the

liquid phase of the feed can be removed in the "gravity zone." The porous belt with the gravity-separated solids on it is then enveloped by another belt as it leaves the gravity zone and enters the low-pressure or "wedge zone", where further phase separation is achieved using mechanical pressure. In the third zone, the belts pass through a series of large rollers that squeeze the belts together, forcing additional liquid through the porous belt into filtrate collection pans. Manufacturers report that pressures can reach 14.2 pounds per square inch or more in the high-pressure zone as the belts travel through a series of rollers. The final liquids separation occurs owing to high pressure and shear forces between the two belts as they travel over the rollers. Pressures in the second and third zones are generally adjustable. The deliquified sludge cake is scraped off the belt into a container for disposal. A high-pressure water wash is usually applied to the belt at this point to clean it and to unplug clogged belt pores.

Behavior of the sludge in the free-draining section is strongly dependent on the composition of the feed. Sludges with low solids content and low-viscosity oil tend to be very fluid. Such sludges may require some means of separating liquids ahead of the filter. For example, the sludge may be held in a tank for a specified period to break up some of the emulsion and to drain off some of the separated oil and water. Heat is usually applied to speed up the process. Removal of oil and water in a pretreater will keep the size of the filter to a minimum.

Belt filters produce a filtrate that can be separated into oil and water phases. The oil is recycled to the refinery, and the water is drained to the wastewater treatment unit.

The cake from a belt filter is typically 25 to 40 percent solids. Depending upon the solids content of the oily waste, the operation can produce substantial volume reduction. With typical refinery oily sludges, the oil content of belt filter cake is usually 10 to 25 percent.

The cost for a belt filter installation can fluctuate widely, depending upon the owner's approach to system design and utilization. Net operating costs are almost always a net revenue (or savings) when the value of recovered oil is credited. Chemical, utilities, labor, and maintenance costs are highly dependent on size and use. Actual return on capital investment is dependent on the size and configuration of the filter press and the level of utilization.

4.1.4.2 Recessed Chamber Pressure Filter (Plate Filter)

A recessed chamber pressure filter uses hydraulic pressure and a separation medium to separate liquids and solids. Figure 4.1-5 is a block flow diagram for a sludge-treating installation based on the use of a filter.

A recessed chamber pressure filter, also called a plate filter or plate and frame, is made up of a number of parallel filter plates. Figure 4.1-6 is a cross-sectional representation of a plate filter. The plates are stacked next to one another in series arrangement and

held tightly together by a hydraulic piston. They are fabricated to provide a series of chambers in which solids may collect. Each plate is covered with a filter medium, (e.g., cloth).

Sludge is delivered to the chambers by means of a positive displacement pump. Liquids pass through the filter medium and are collected for later treatment while solids are collected inside the plate chambers. It is normal practice to treat the sludge with conditioning chemicals before it is fed to the filter.

The filter medium is precoated with material such as diatomaceous earth at the beginning of each cycle. Precoating alleviates blinding of the medium by fine solids during operation and also promotes release of the collected solids from the press at the end of the cycle.

To filter oily sludge effectively, the sludge must be preconditioned by heating and adding chemicals in order to destabilize emulsions and increase filtration rate. In filtering oily sludges, ferric chloride and hydrated lime are typically used as conditioning chemicals. Amounts added are dependent upon the amount of solids present in the sludge. Normal practice is to add predetermined amounts of ferric chloride and lime for every pound of solids contained in the sludge.

Pressure filtration can be highly effective. A well-run operation can produce a cake having 50-60 percent solids and less than 10 percent oil.

The cost for a pressure filter installation can fluctuate widely, depending upon the owner's approach to system use. Some operators may choose to operate this type of equipment 1 shift/day, 5 days/week, while others may elect to operate continuously. Net operating costs are almost always a net revenue (or savings) when the value of recovered oil is credited. Actual return on capital investment is dependent on the size and configuration of the filter press and the level of utilization.

4.1.4.3 Rotary Vacuum Filter

A vacuum filter is a cylinder with two closed ends. The surface of the cylinder is covered with a filter cloth and partly submerged in a tank containing the slurry to be filtered. In operation, the cylinder is rotated slowly on its axis while a vacuum is applied to its inside. Filtrate is pulled through the filter cloth while the solids contained in the sludge are deposited on the surface of the cylinder. Deposited solids are scraped off with a scraper and removed for disposal as the drum rotates. Filtrate is collected and delivered to a treatment module via a pump. See Figure 4.1-7 for a block flow diagram.

A vacuum filter is operated in a semi-continuous manner. A thick layer of diatomaceous earth or some other filter aid is deposited on the surface of the filter drum at the beginning of a filter cycle. During operation, the scraper removes a very thin layer of

precoat with the filtered solids for every drum revolution. Filtration is stopped when a predetermined thickness of precoat has been removed, and a new precoat layer is redeposited on the drum.

A precoat system consists of a storage facility for dry precoat material, a tank for preparing a water slurry of the material, a feeder for feeding the dry precoat to the slurry tank, and a pump for transferring the slurry to the filter. A precoat recycle pump sends the filtrate water back to the slurry tank during precoating. The cost of the precoat module is determined by the size of the filter.

A vacuum filter installation requires upstream and downstream facilities much like those for pressure type filters. In terms of performance, a vacuum filter is more like a belt filter than a pressure filter. Solids content of the cake will be about 30 percent. Oil recovery in the filtrate is less, because the diatomaceous earth precoat tends to absorb it.

Cost for a vacuum filter installation will fluctuate widely, depending upon the owner's approach to system utilization.

4.1.5 Centrifugation

Centrifugation, like filtration, is a mechanical treatment technology used to recover oil and reduce waste volume. Centrifugation is typically an alternative to filtration, and a decision on which to employ is based on application-specific criteria regarding cost, performance, and operating characteristics.

In centrifugation, the rapid spinning of a cylindrical container, forces the denser materials toward the outer wall of the cylinder where they can be removed. The force applied is generally several thousand times the force of gravity. Centrifuges used in the petroleum industry are scroll and disc type machines, both of which run continuously.

4.1.5.1 Scroll Centrifuges

Horizontal and vertical scroll centrifuges are commonly used centrifuge systems. A horizontal scroll centrifuge is shown in Figure 4.1-8. The feed is introduced into the center of the bowl, where the centrifugal force causes the material to separate into light and heavy components. The heavier materials, solids, are forced to the outside of the bowl, where a helical scroll conveyor moves them down the bowl toward one end and out the discharge. The liquid travels in the opposite direction in the bowl, flows over a weir, and is then withdrawn from the centrifuge. The operation of a vertical machine is similar except it is suspended vertically from one end instead of mounted horizontally.

Horizontal scroll centrifuges are capable of separating sludge into a solid and either one or two liquid streams. A machine producing only one liquid phase is referred to as a two-phase machine. The combined oil/water stream could be separated in an existing

slop oil treating tank or in a new tank built as part of the treatment system. The three-phase scroll machine produces separate oil and water phases. Oil can travel to the slop oil system, or possibly even to crude charge, and water can go to the refinery oily waste sewer system.

Vertical scroll machines operate much like horizontal units. Solids move to the outside of the bowl and out the bottom, and liquid goes to the top. Vertical scroll centrifuges produce only one liquid stream; therefore, a downstream oil water separation tank is required. Vertical centrifuges cost 35 to 50 percent more to manufacture than horizontal machines of the same capacity owing to the mechanism required to suspend the bowl in a true vertical position. Vertical machines are generally only used for temperatures above 200 degrees F, at high pressures, or where space is a consideration.

Centrifugal force developed by various manufacturers' machines is usually measured relative to the force of gravity. In general, horizontal and vertical two-phase scroll centrifuges will produce a force about 3,000 times the force of gravity. A horizontal three-phase scroll machine will produce a force about 2,400 times that force of gravity. According to manufacturers, horizontal two-phase scroll units should produce a dryer solid than the three-phase units owing to their higher force.

4.1.5.2 Disc Centrifuge

Figure 4.1-9 shows the operation of a disc centrifuge. Machine designs allow the feed to be introduced either into the top or the bottom. The feed liquid is led outward and up through a hole in each disc, and the three components of the feed are separated by the high centrifugal force developed by the rotation of the bowl. Disc centrifuges can produce a force up to 7,000 to 9,000 times that of gravity.

Narrow spacing between the discs provides a shortened path for conducting light-phase liquid to the center of the bowl and out through the discharge port. Solid particles and heavy liquid are sent to the outside of the bowl. A small part of the heavy-phase liquid is used to flush the solids through the nozzles, while the remainder is conducted upward and discharged through a port at the top of the bowl. Disc centrifuges fit best as the second stage in multiple-stage centrifuge systems. A first-stage scroll centrifuge is used to remove the majority of the solids, particularly the larger ones. A higher-speed disc centrifuge is used to increase the capture of fine solids and to help achieve a good phase separation of water and oil. In this configuration, the solid slurry that is produced out the side of the disc centrifuge can be returned to the scroll machine, possibly after solids flocculation.

4.1.5.3 System Design

Although single scroll-type centrifuges can be used to treat sludges, in some circumstances this centrifuge may not produce a refineable oil, a relatively clean water,

and a solid that does not contain free liquids at the same time. Fine solids not recovered with the cake tend to form an emulsion in either the oil or water phase. A single centrifuge would be effective if the objective is to remove liquids so that the resultant oily solids could be fed to a coker, treated, or incinerated.

Effective chemical treatment of the feed is more important with centrifuges than with filtration systems, where solid particles are removed from the sludge because of their size. In a centrifuge, the density difference between the liquid and solid phases separates the sludge. If a solid particle denser than water is coated by an oil droplet less dense than water, the oil-coated particle may be neutrally buoyant and not separate effectively in the centrifuge. Successful centrifuge operations use de-emulsifiers in an attempt to water-wet the surface of the solids.

Fine solids can be particularly troublesome because they do not have sufficient mass to separate in the centrifuge without significantly decreasing the throughput of the machine. For smaller particles, a longer residence time is required, and the potential of the machine to achieve the desired performance is lower.

Capital costs of centrifuge systems can be less than those of pressure filter installations but greater than those of belt or vacuum filter installations. Operating costs almost always turn out to be a positive cash flow (i.e., savings) if recovered oil can be credited.

4.1.6 Thermal Treatment

Thermal treatment is used to achieve maximum volume and toxicity reduction short of incineration. In some applications, thermal treatment methods can meet BDAT treatment standards. At the same time it maximizes oil recovery.

Figure 4.1-10 shows a block flow diagram for a thermal sludge treatment installation. Typically, oily sludges are processed ahead of thermal treatment for bulk removal of liquids.

A thermal processor vaporizes the volatile components in the feed, leaving behind a dry, solid residue. The feed is heated to approximately 350 to 500 degrees F to vaporize the water and volatile organic compounds that can be stripped at this temperature.

The feed system to the thermal processor consists of conveyors, a feed hopper, and a rotary valve to introduce the cake into the processor.

A screw conveyor-type thermal processor is illustrated in Figure 4.1-10; it is an essentially closed system equipped with a rotating screw or paddle device inside to move the material being processed along the length of the unit. Hot oil is circulated through passages inside the screw and walls of the unit to supply the heat needed. The procedure for sizing a thermal processor is similar to that used for sizing a heat

exchanger. The hot oil that supplies the heat is heated in turn with a fired, hot oil or electric heater.

Solids leaving the thermal processor are hot and can be dusty. Solids handling facilities use a conveyor to transport the material and can be equipped with a water spray to cool the hot solid and control dust.

Figure 4.1-10 shows just one of the thermal treatment processes available. Alternative methods, such as spray drying, can also be useful in certain situations.

4.1.7 Sludge Coking

Many oily sludges generated within a refinery can be recycled to a delayed coking unit. Sludges amenable to this process include DAF float, API separator sludge, slop oil emulsion solids, and heat exchanger solids. Sludge coking permits recovery of hydrocarbons present in the sludge for recycling within the refinery, while the remaining solid material becomes part of the coke product. Delayed coker sludge technology is in commercial use at many refineries that process a variety of sludges.

Key parameters to evaluate when considering delayed coker sludge recycle technology are coke quality specifications and the quantities of sludge to be handled, relative to coke production. These parameters may limit the quantity of sludge that can be recycled.

At least three delayed coker recycle technologies are available. One process is designed to inject sludge as a quench medium directly to the coke drums during the coker quench cycle. The second process mixes the sludge with gas oil and injects the mixture into the coke drum feed line. The third process is designed to inject sludge into the blowdown contactor usually associated with delayed coking units.

4.1.7.1 Quench Water Injection

Coke quenching was developed during the early 1970's as a treatment for refinery sludges such as API separator sludge, tank bottoms, DAF float, and wastewater treatment biological solids.

Sludges are mixed with quench water at the beginning of the coker water quench cycle. (Quench water is added to a coke drum to cool the drum before cutting and removing the coke.) A large fraction of the added sludge is water and volatile organics. Water and hydrocarbons present are flashed off in large part during the early portion of the quenching cycle and recovered in the blowdown system. Solids and organics that do not vaporize are dispersed through the coke voids and become part of the petroleum coke. The quantity of sludge recycled is controlled to prevent sludge carryover and to maintain acceptable coke specifications.

A process flow diagram for quench water injection is presented in Figure 4.1-11. As of this writing, approximately 12 process units are currently installed and operational in the United States. Sludge loading rates are dependent on coke production and cooling cycle temperatures.

4.1.7.2 Coking Cycle Injection

Sludge conversion to the coking cycle, or flexicoker, incorporates the injection of oily refinery sludges mixed with gas oil into a delayed coker. Oily sludge is collected in a storage bin, pumped at a controlled rate to a slurry mix drum, and blended with gas oil using a mixer. The mixture is injected directly into the coke drum feed line along with the normal feed. The advantage of this processing scheme is that all components of the sludge are subject to the full coking process. The light hydrocarbons and water are flashed overhead and returned to the fractionator. Heavier hydrocarbon constituents are volatilized (some break down to shorter chain molecules which then volatilize) during the coking process. The remaining solids become part of the coke. Figure 4.1-12, shows a process flow diagram for coking cycle injection.

4.1.7.3 Blowdown Injection

Figure 4.1-13 illustrates the process of injecting sludges into the blowdown contactor used to separate quenching products. Sludge is first collected in a tank and then pumped to one of two possible contactor entry points. The contactor depicted has been modified by the addition of three new disk-and-donut trays. The preferred sludge injection point is below the top two new trays. A second option is to add the sludge to the coke drum vapor line immediately before it enters the contactor downstream of the desuperheater.

Once introduced to the contactor, the sludge components separate. The associated water is condensed and discharged to the sour water system. The solids and oil exit the bottom of the contactor and are routed to the delayed coker unit fractionator section where hydrocarbon fractions are recovered. Remaining sludge solids enter the coke drums and become part of the coke product.

4.2 Tank Bottoms

In any attempt to minimize waste in refinery operations, attention should be given to minimizing tank bottoms. Tank bottoms, which are the solid or semi-solid materials or sediment that accumulate in the bottom of storage tanks, can constitute a large percentage of waste in a refinery and often present difficulties for disposal.

Tank bottoms are composed of a combination of various constituents including solids or sand (brought in with crude oil), produced water, rust or scale (from the tank or transfer lines), and heavy hydrocarbons that sink. The rate of buildup of these materials is very slow because their concentration in the stored material is very low. Generally, several

years pass before sufficient amounts build up to a point where the tank is taken out of service to remove the bottom sediment. Tank bottoms are also removed as a standard procedure in preparation for maintenance or repairs that require welding.

The makeup of tank bottoms varies widely according to local conditions and the various hydrocarbons being stored. Tank bottoms can contain:

- Oil - 40 to 90%
- Water - 10 to 40%
- Solids - 2 to 50%

The volume of tank bottoms varies according to tank service, years on-line, and age of tank.

Minimizing the quantity of tank bottoms during the cleaning procedure is key to reducing the amount of tank bottom waste generated. Most important, as much free oil and water as possible, even that portion below the pump suction line, should be removed before the tank is taken out of service.

Once the tank is taken out of service, it is often very cost-effective to separate the remaining oil and water phases of the tank bottom as these phases can still comprise a large percentage of tank bottoms. Some refineries operate filters or centrifuges on a routine basis to treat tank bottoms to minimize waste disposal and to recover oil. Separated oil is recycled back to the refining process, and the water phase is released to the plant sewer for subsequent treatment as wastewater. The remaining solids are managed in acceptable facilities. The centrifuge/filtration systems can be permanently installed or transportable systems can be supplied by service contractors. (See also sections 4.1.4 and 4.1.5.)

Cleaning out heavy oil and crude tanks can be especially difficult. Some tank cleaning service companies are marketing new techniques for removal of muck from tank bottoms. In some situations, it may be possible to reclaim up to 95 percent of the oil from a tank bottom and reduce up to 95 percent of the waste.

An alternative method for minimizing the amount of crude oil tank bottoms involves the use of mixers to keep the sludges continuously in suspension so that they travel with the crude oil to the refining process. Some refiners routinely use emulsifying chemicals in the crude to keep water and solids in suspension and later use de-emulsifiers in the desalters at the crude units. As discussed in 4.1.1.4, however, it may, in many cases be better to allow the solids to settle in the crude tank than have to address them in the desalter.

If mixers are to be used, various types can be placed in crude tanks. In some installations, three or four manually adjustable mixers are spaced equally around the tank

wall. The direction of flow for these mixers is changed manually every few weeks based on experience. In another common configuration, a sweeping mixer automatically oscillates to produce a sweeping motion over the floor of the tank, so that the heavy oil and particles remain suspended in the crude.

4.3 Fluid Catalytic Cracking Unit (FCCU) Decant Oil Sludge

Heavy cycle gas oil from the bottom of the FCC Main Fractionator Column typically contains catalyst fines in a concentration ranging from 0.2 to 0.4 weight percent. The presence of the fines inhibits the recycling of this heavy slurry oil.

Slurry oil that is to be used as fuel or carbon black feedstock is usually sent to a tank for storage to settle solids. However, fine particles tend to remain in suspension. In addition, the tanks must be opened periodically and the catalyst sludge removed and managed as a waste.

Figure 4.3-1 shows a modular system employing 12-inch diameter carbon steel cylinders for minimizing the solids in decant oil. Each module is equipped with a 4-inch diameter tubular electrode surrounded by glass beads. As solids-laden oil passes into the separator module, the catalyst particles become polarized in the high-voltage electric field and are captured on beads. Catalyst is automatically removed by backflushing with an upward flow of oil which is returned to the FCCU for reuse.

The beads are the key to the separator's performance. The spherical beads capture particulate matter at the multitude of contact points within the separator and permit easy release of the catalyst particles during backflush. The proper type and size of beads are selected to create the high-energy field required to remove fine catalyst particles.

Solids removal operating from FCCU decanted oil has been reported at 94 percent. Removal of solids from slurry oil has been 99 percent. One refinery reports the elimination of the need for disposal of 100 tons per year of tank bottoms from the decant oil tanks.

Another way to reduce catalyst in the decant oil is to install high efficiency cyclones in the reactor. This can shift the catalyst fines losses from out of the reactor to out of the regenerator where the fines can be collected in the electrostatic precipitator. On the order of two pounds of tank bottoms is avoided for every pound of catalyst exiting the regenerator instead of the reactor.

In addition, filter systems, centrifugation, and chemical treatment systems are all available for removing cat fines for ultimate recycling.

4.4 Purge Stream from Tail Gas Treating

A process for the removal of sulfur compounds from gas streams is used extensively in U.S. refineries to clean the tail gas emissions previously exhausted by sulfur recovery plants.

The tail-gas stream is contacted with the solution in an absorber and the hydrogen sulfide reacts to produce elemental sulfur and a reduced vanadium salt. The sulfur is separated from the solution by flotation.

Several side reactions take place which produce sodium thiosulfate and sodium sulfate. Control of these concentrations has traditionally been accomplished by purging a continuous solution stream or by changing out the entire solution inventory when the salt levels get too high. In many cases, the purge must be managed as a chemical waste at a substantial cost. Three waste minimization alternatives to reduce the waste solution include conversion to methyl diethanolamine (MDEA) ~~designs~~, and use of a vanadium recovery system.

~~4.4.1 MDEA Conversion~~

There are a variety of MDEA processes, ~~but they~~ typically consist of two steps. In ~~the~~ first ~~step of the~~ process, essentially all sulfur compounds in the tail gas (SO_2, S_x, COS, CS_2) are converted to H_2S. The tail gas is heated to reaction temperature by mixing with the hot combustion products of fuel gas and air. This combustion is carried out with a deficiency of air to provide sufficient H_2 and CO to convert all of the sulfur and sulfur compounds to H_2S.

The heated gas mixture is then passed through a catalyst bed where all sulfur compounds are converted to H_2S by hydrogenation and hydrolysis. The hydrogenated gas stream is cooled in a steam generator and then by direct contact with a buffer solution before entering the H_2S removal portion of the process.

The second step is the removal of H_2S from the hydrogenated tail gas. One of several processes used to remove H_2S involves absorption in a solution of MDEA or one of the recently developed highly selective amine-type solvents. The cooled, treated tail gas enters the solution contactor where H_2S is absorbed from the gas. Solution entering the top of the contactor absorbs essentially all of the H_2S and a small portion of the CO_2. Any entrained amine is removed from the tail gas in a knockout drum.

Rich solution is routed to an associated regeneration system where H_2S and CO_2 are stripped away. This enriched H_2S stream is then recycled to the sulfur recovery plant. Lean solution is pumped back to the solution contactor to complete the cycle. The tail gas leaving the absorber need not be incinerated to meet required H_2S and total sulfur specifications.

The pressure drop for the treated gas is 2 to 3 psi; all pressures are near atmospheric. Operating temperature is 550 to 750 degrees F for the hydrogenation hydrolysis reactor. Equipment is essentially all carbon steel. The clean tail gas contains fewer than 10 ppm H_2S when the newer solvents are employed.

The costs associated with converting to MDEA technology for sulfur removal are highly site-specific and depend upon how much of the existing equipment might be used.

4.4.2 ADA and Vanadium Recovery Process

A patented process has been developed to purge thiosulfate while recovering anthraquinine disulfuric acid (ADA) and vanadium to recycle them back to the tail gas system. Figure 4.4-1 illustrates this recovery process, which consists of the unit operations of filtration, charcoal adsorption, and ion exchange operating on a semicontinuous cycle. The filtration section provides a stream that contains no sulfur particles that would interfere with performance of the activated charcoal or the ion exchange resin. Porous tube filters provide essentially 100 percent removal of sulfur particles down to around 0.5 microns. If a high sulfur concentration is present in the purge solution, an additional filter may be required upstream of the porous tube filters.

After sulfur removal, charcoal adsorption removes ADA from the purge stream while ion exchange resin removes vanadium. The purge is then discharged to the sewer. Additional treatment could be provided, if necessary, to oxidize thiosulfate prior to discharge. During the loading step, chemicals are removed from the purge onto the recovery beds. After the charcoal and ion exchange beds are fully loaded, they are simultaneously regenerated.

Regeneration is accomplished using a four percent caustic solution to remove vanadium from the ion exchange resin. The effluent from the resin bed is then heated and used to strip the ADA from the charcoal. The caustic stream, containing the ADA and vanadium, is returned to the balance tank. A system flush follows to lower the pH in the resin bed and to cool the charcoal. The recovery beds are then ready to be loaded again.

This process will recover 95 percent of the ADA and between 80 to 85 percent of the vanadium. Vanadium recovery is sensitive to the thiosulfate concentration of the purge.

The system unit uses modest amounts of electricity, instrument air, cooling water, and chemicals. The steam requirement is about 1.2 lbs./gal. of feed. Condensate is 2.2 gal./gal. of feed. Caustic (25 percent strength) for regeneration amounts to 0.1 gal./gal. of feed.

4.5 Empty Drums

Empty drums that previously contained petroleum products, chemicals, or waste become a waste handling problem and must be either recycled or crushed and transported to disposal.

Reduction of waste drums can be accomplished through changes in purchasing procedures, testing and reclassification of the residuals remaining in the drums, and on-site pH neutralization of residuals in the drums. These procedures require a significant team effort by the purchasing, accounting, environmental, and operating departments within the refinery.

Nonhazardous substitutes for hazardous chemicals purchased in drums should be evaluated, and purchasing policies and instructions should be restated to require the use of the new nonhazardous chemicals.

Purchases should be made from suppliers who recycle their own drums through a deposit system rather than from vendors who do not take back empty drums. Furthermore, purchase of materials in bulk should be required in lieu of purchasing material in drums. If purchase in bulk creates a problem in outlying areas because of low usage, a central bulk storage area can be set up and a system to refill and distribute drums continually to the outlying areas can be implemented. Some vendors are phasing out the sale of chemicals in drums. Chemicals not sold in bulk are sold in reusable, returnable containers.

Another important part of this program is to provide instructions for capping of drums after use so that workers do not inadvertently use them for disposal of unknown materials. This policy has the added benefit of segregating drums that do not contain hazardous waste so they can be recycled as nonhazardous.

Another minimization practice is to neutralize any acid and alkaline residues in certain drums on-site. A tank containing recyclable wash water can be used to rinse and remove both the acid residues and alkaline residues using a hose and catch basin that flows back into the washwater tank.

4.6 Slop Oils

A typical refinery generates a broad array of intermittent slop oil streams originating from either operations or maintenance activities. Slop oils represent a large volume of recyclable materials in refineries and taking advantage of this can significantly decrease waste generated in many refineries.

Examples of operational waste oils include:

- Off-spec products
- Off-spec intermediate streams
- Oil/water separator skimmings
- Oil in ballast water
- Startup or shutdown streams
- Laboratory samples
- Product sample tops

Examples of maintenance slop oils are:

- Drains from refining vessels prior to maintenance
- Used lube oils from vehicles and equipment
- Hydraulic fluids from heavy equipment
- Compressor lube oils

These wastes represent a negative impact on operating earnings of a refinery and are being minimized because of economic pressure to reduce operating costs. Source reduction of some of these wastes is possible through training and educational programs. Slop oil streams of significant volume are frequently pumped directly to a slop oil tank where they are treated and ultimately recycled back to the crude unit. Operation and maintenance procedures which preclude the need for draining of hydrocarbons to the sewer system should be used. Faster startup and shutdown procedures are being developed which result in less waste being generated at those crucial times.

Recycling to outside service companies is effective for certain oil streams. Some recyclers take used lube oils from vehicles and heavy equipment for re-refining to usable products or inclusion in certain waste fuels. Hydraulic fluids and radiator coolants can be managed on a recycle basis by trading used material for new material.

4.7 Solvents

Various solvents are used in maintenance activities within refineries to clean or degrease pumps and machinery. These solvents become contaminated with miscellaneous hydrocarbons as well as solid particles such as sand, grit, and metal. Solvents may contain chlorinated hydrocarbons not suitable for recycling to the refinery slop oil system; the usual management procedure is to recycle solvents off-site by vendor or to reclaim them by installing an on-site distillation system. Please note however, that the recycling of solvent may be a regulated activity.

Some vendors supply fresh solvents and containers for use in machine shops or maintenance garages. The vendors own the solvents and replace old ones with newly distilled material on a routine change out basis.

An alternative to vendor supplied solvents is an internal system to distill and reclaim solvents. Packaged systems are available in a wide assortment of capacities to handle different types of solvents. These systems may only be economical for large refineries with solvent usages exceeding 1000 gallons per year.

4.8 Spent Caustics

Caustic solutions are used in numerous refining processes to absorb and remove contaminants from intermediate and final product streams and to remove hydrogen sulfide from gas streams. Some of these processes result in spent caustics that can be regenerated and recycled within the refinery. Other processes are operated such that the caustic needs to be purged from the system without regeneration.

Caustic treatment to remove hydrogen sulfide and mercaptans from gas and product streams produces a spent sulfitic caustic which must be carefully managed to avoid release of hydrogen sulfide.

Caustic treatment may also be used to remove phenolics, cresylics, and naphthenics (all referred to as phenolics) from refinery naphtha and distillate streams. The quantity and composition of phenolics in the spent caustic depend on the end point of the process stream being treated and the aromatics content of the raw crude. Figure 4.8-1 illustrates how the phenolic content of the treated stream is a function of its boiling point, with the concentration of phenolics increasing as the boiling point rises.

After the absorption capability of caustics is fully utilized, the spent caustics must be removed from the processing system and replaced with fresh materials. Because discharge of spent phenolic caustics to refinery wastewater adds surfactant load that will lead to the production of additional emulsions and sludges, caustics are generally segregated and handled separately. They are usually [illegible] off-site

In some cases, it may be possible to modify the caustic treating process to achieve a substantial reduction in the amount of waste caustic generated. For example, refineries that use nonregenerative scrubbing to treat kerosene streams to meet specifications for jet fuels and home heating oils may find that hydrotreating these hydrocarbon streams is a good alternative to caustic scrubbing (depending on site-specific cost considerations).

4.8.1 Recovery and Recycling of Phenols from Caustic

For refineries that have optimized caustic treatment to minimize the amount of caustic used, one of the following practices can be employed to recycle spent caustic to companies that recover phenols either off-site or on-site. Please note however, that recycling may be a regulated activity.

4.8.1.1 Off-Site Recycling

Spent caustic containing phenolics can be sold to chemical recovery companies that specialize in extracting various phenolic isomers that distill at 240 degrees F or higher. These recovered streams are then sold to chemical industries that produce such items as lysol, fertilizers, pesticides, and fibers.

Generally, spent caustic should contain 5 percent or more phenolics in order to warrant recovery in extraction and distillation equipment. A phenolic content between 13 and 14 percent is usually required to recover the cost of transportation to the recovery plant. There is no upper limit on acceptable caustic strength, but sulfide sulfur content should not exceed 0.5 percent by weight.

The phenol recovery process produces a brine effluent that is also sold as a byproduct for subsequent recycling. A final effluent water may require subsequent management. Economics of recovery and recycling is sensitive to environmental regulations placed on the recovery facilities.

4.8.1.2 On-Site Recycling

Phenolic caustics can also be recycled on-site by removing the absorbed hydrocarbons from the spent caustic. Figure 4.8-2 shows a simple sketch of a process that will recover phenolics from spent caustic by pumping to a tank where acid is added to reduce the pH of the caustic to around 3. The phenolics become insoluble and form a separate layer on top of the caustic where they can be skimmed and recycled to a refinery product stream. A basic substance must be added to the remaining caustic to increase its pH to 4 before release back into the refinery wastewater system. It should be noted that difficulties may be encountered when treating the aqueous layer of neutralized phenolic caustic in a biological system. For example, organic overloading and extreme odor problems are possible.

Construction materials for on-site recycling are very expensive owing to the low pH of the process. In addition, because hydrogen sulfide may be released when the pH is reduced, the system must be enclosed, blanketed with an inert gas, and vented to the refinery sour gas system.

4.8.2 Recycling Sulfitic Caustic

Spent caustics containing sulfides from treating liquified petroleum gas (LPG), straight-run gasolines, and naphthas generally can be sold or brokered for recovery of sulfides. The economics usually result in a net charge to the refiner, depending on location and on concentration of sulfides and sodium in the spent caustic. Caustics containing sulfides greater than 4 percent by weight with more than 7 percent by weight of sodium are

desirable in the paper and mining industries. Brokers arrange for delivery direct to the user or to their facilities where blends are made before to delivery to the user.

Caustics containing more than 7 percent sodium and less than 1 percent sulfides are desirable to the chemical industry for recovery of sodium.

In all cases, contamination of spent caustics with chlorides or ammonia is highly undesirable because these cause corrosion and air pollution problems when used in recovery processes.

4.9 Spent Catalysts

Petroleum refineries use several types of catalysts to increase the quality and quantity of fuels they produce and to assist in treating wastes their process units generate.

Because some catalysts contain noble metals that provide the catalytic activity, they are excellent candidates for recycling. Other catalysts that do not contain valuable metals may be recycled for use as raw materials in the production of products. A European refiner has arranged to use catalyst as a feedstock substitute in brick manufacturing. This section describes the following waste minimization practices for regeneration refinery catalysts for reuse:

- Recycling to metals reclamation
- Recycling to cement
- Recycling to fertilizer plants

Please note, however, that recycling may be a regulated activity.

4.9.1 Recycling to Metals Reclamation

Several organizations purchase spent catalysts from refineries to recover metals or regenerate the catalysts for reuse. The activity of the regenerated catalyst may not be as good as needed for its original service, but it may be suitable for another refinery that doesn't require such high catalyst activity.

Organizations that regenerate spent catalysts may sometimes sell them to other users. During its life, a catalyst may be used at several different refineries.

Refinery hydrotreating catalysts generally consist of cobalt and molybdenum or nickel and molybdenum on an alumina support; they are typically regenerated after use. Catalytic reforming catalysts contain platinum or other precious metal promoters on an alumina support. These spent catalysts are sent to specialized recovery organizations for metals reclamation.

Refinery hydrocracking catalysts normally consist of palladium on a zeolite support. After several use/regeneration cycles, hydrocracking catalysts are shipped for metal recovery.

4.9.2 Recycling to Cement

During the past two years, there has been increased interest in using spent catalyst from fluid catalytic cracking units (FCCU) as a raw material source for cement manufacturing owing to its high silica and alumina content. At the cement plant, the catalyst is unloaded and stored in a separate hopper with a dust collection system; most cement plants use baghouses for storage. Spent catalyst is blended into the cement mixture along with other solids. In some instances, cement companies will either dedicate an existing hopper system to FCCU catalyst or they may need to construct a new storage hopper. Some cement plants require a commitment of a minimum quantity of catalyst from a refinery over six months to a year to justify the cost of new or modified equipment.

One refinery may not produce a sufficient quantity of spent catalyst to justify the new equipment, but refineries in the same regional area should consider working together to provide the amount necessary to secure a recycling contract with a local cement company.

4.10 Spent Clay

Clay filters are utilized in refineries to filter hydrocarbon streams to meet product specifications. Typically, these filters operate on diesel or jet fuel to trap moisture and small particles or to improve color specifications. When the clay material must be replaced, it will often contain significant amounts of entrained hydrocarbons.

Some refineries have been successful at backwashing the clay with water or steam to reduce the hydrocarbon content to acceptable levels so that the clay can be handled as nonhazardous waste. During a backwash period of up to three days, oil is floated off and recovered. One refinery reports that the useful life of the clay can be extended significantly, thus reducing the amount of spent clay produced.

The type of clay employed is important in determining whether water washing will create an unmanageable mud problem. Pelletized treating clay usually can withstand the water wash without forming mud, while pulverized clay will tend to create mud waste. Small-scale trial runs and consultations with the process vendor are recommended to determine the suitability of clay backwashing before implementing this method on a full-scale basis.

4.11 Sandblast Media

Proper maintenance of many process units, tanks, and pipes requires painting. Harsh operating conditions and environments can necessitate more frequent painting. The

typical procedure at most facilities is to sandblast the old paint or coating prior to applying a new one. The mixture of spent blast sand and paint chips must be disposed.

If not managed correctly, spent sandblast abrasive can be washed into the sewer system, producing more oil/water separator sludge. Usually, spent blast sand is disposed of as a solid waste in a landfill.

Use of alternative blast media wherever possible reduces the volume and toxicity of material needing disposal. For example, sodium bicarbonate granules, which are nonhazardous and readily soluble in water, can be used in some sandblasting situations. Graded rock salt, which is nonhazardous and readily soluble, also often can be used successfully.

In general, the primary approaches for reducing the amount of used blast sand are:

- Reduce the amount and/or toxicity of blast media by using less hazardous or alternative media.

- Reduce the amount of used blast media that must be disposed by recycling it.

Examples of methodologies representative of these approaches are discussed more fully below.

4.11.1 Abrasive Blast Media

The U.S. Navy has developed and is using another media for paint removal. This material, called Abrasive Blast Media (ABM), comprises a highly specified copper slag that is less toxic than silica sands, but similarly effective for paint removal. The contaminants in ABM (MIL-A-222C2A) are below California's total toxic limit concentration (TTLC) and soluble toxic limit concentration (STLC).

ABM may be used in shipyards and the spent material can be managed as a nonhazardous waste. ABM requires no specialized operating equipment. Because the material is less toxic than sand, little safety control equipment will be needed and disposal costs will generally be lower than for sand.

4.11.2 Copper Slag Abrasive with Recycling

As an alternative to sand, copper slag may be used as an abrasive to remove paint and/or coatings. The copper slag can be applied via most traditional sand blasting equipment.

Copper slag is advantageous because it is heavier than most coatings and, therefore, may be separated and recycled. A mixture of spent copper slag abrasives and paint chips is fed into cyclones. The density differential between the two streams promotes separation. The fines and paint chips are segregated and disposed as a waste because of the metal concentration. Approximately 94 percent of the spent copper slag can be recovered and reutilized for blasting.

4.11.3 Alumina Oxide Abrasive with Recycling

Alumina oxide can be used as an effective alternative to blast sand. Alumina oxide is a synthetic product that does not contain the same concentrations of metals as copper slag or sand. The material can be used in traditional sand blasting equipment and it can be recycled through a process of grading, classifying, and cleaning. Vendors will normally build and install the recycling equipment, at their expense, on the customer's facilities. In return, the customer agrees to purchase the abrasive material at a specified price.

4.12 HF Sludge Media

Hydrofluoric acid drained from vessel and pump drains in a hydrofluoric alkylation unit is collected through a sealed gravity sewer system into a sump. Typically, the acid is first neutralized with caustic to form NaF and then contacted in a sump with lime to form calcium fluoride which will precipitate. The sludge is periodically removed and deposited in a landfill.

4.12.1 Neutralization and Filtration

Sludge volume can be reduced substantially by filtration. Filtration tests have shown the material to be readily filterable using pressure filters such as those described in Section 4.1.4.2. The sludge does not have to be preconditioned as does oily sludge. The excess lime used in neutralization provides the body conditioning that is needed.

The sludge itself may be 30 to 35 percent solids. Filtration will produce a cake containing 40 to 45 percent solids, thereby reducing the mass for disposal by 40 to 55 percent.

The volume of sludge from a refinery probably would not justify a permanent filter installation. Arrangements can be made with service organizations to bring in a mobile filtration unit periodically to process accumulated sludge.

4.12.2 Production of Fluorspar

If lime neutralization is employed, the calcium fluoride slurry can be converted to fluorspar, which can be sold to the steel and glass industries as a fluxing agent.

4.13 Cooling Tower Blowdown

Cooling towers transfer waste heat from refinery operations to the atmosphere. Traditional units found at refineries employ recirculating water systems where waste heat is absorbed into water and released to the atmosphere at temperatures above the ambient wet bulb temperature. A simplified sketch of an industrial cooling tower is shown in Figure 4.13-1.

The bulk of the heat is removed by evaporation of a portion of the water as it passes countercurrent to air within the packing portion of the tower. Normal operating conditions (1000 BTU per pound of water vaporized) evaporate approximately 1.2 percent of the circulating water being evaporated per 10 degrees F temperature drop across the cooling tower.

Evaporation of the water results in an increased concentration of dissolved salts in the remaining cooled water. These salts can build up to the point where they saturate the solution and precipitate onto the cooling system equipment. It is normal procedure to control the dissolved solids concentration by purging or blowing down a portion of the recirculating water. Sections 4.13.1 and 4.13.2 describe techniques for minimizing the quantity and toxicity of cooling tower blowdown.

4.13.1 Minimizing the Quantity of Cooling Tower Blowdown

Solids deposition within the cooling system reduces effective heat transfer and creates sludge that must be disposed. Cooling water systems are typically monitored for calcium sulfate, carbonate and silica deposits. Biological contaminants can also be present because warm, highly oxygenated waters are ideal growth sites for naturally occurring organisms. Cooling water blowdown sludge is a "primary sludge" and it is best to try to prevent formation of the sludge when possible.

The most common scale in industrial cooling systems consists of calcium carbonates, the products of naturally occurring calcium hardness and alkalinity. Noncarbonate scale appears when the solubility products of calcium sulfate and silica are exceeded in the cooling waters. Concentrations of calcium sulfate and silica greater than 1500 and 50 mg/l, respectively, are maintained in the recirculating system by adjusting blowdown rates and monitoring makeup water quality in order to reduce the probability of scaling.

It is important to recognize that cooling tower blowdown should be addressed on a site specific basis after careful water quality analysis. Other publications (e.g., API's 1977 publication on Water Reuse) discuss reducing refinery wastewater in more detail. Briefly, techniques for minimizing the quantity of blowdown include: makeup water quality adjustment (by either source control or water treatment) and recirculating water treatment.

If the concentration of dissolved solids in the cooling water is kept low, more water (cycles of concentration) can be run through the cooling tower. Total dissolved solids (TDS) can be removed from the cooling water makeup stream by: cold lime softening, reverse osmosis, or electrodialysis. These well known technologies are frequently employed to improve the quality of fresh water makeup rather than for blowdown minimization.

Makeup treatment systems can frequently reduce the quantity of blowdown significantly. A simplified calculation is presented in Table 4-1 to illustrate potential of blowdown minimization. If treatment system cycles of concentration can increase from 3 to 10, the blowdown rate for a 50,000 gpm recirculating cooling tower will decrease from 850 gpm to 150 gpm. Fresh water makeup is similarly reduced from 2700 gpm to 2000 gpm. Thus, makeup water treatment can minimize waste production while conserving refinery cooling water makeup.

An alternative to treatment of the full cooling tower makeup is a judicious selection of the source of this makeup. Most refineries have been sited for their easy access to crude feedstocks or surface water for feed and product transportation. Refinery locations often have several potential sources of makeup, from local surface water, groundwater, possibly some higher quality blowdowns such as high pressure boilers on site, and possibly some water reuse options from local industry.

Careful review and selection of makeup source(s) may enable a cooling system to run at higher cycles of concentration. Parameters of concern include the concentrations of calcium, sulfate, and silica and the pH of the stream. Makeup sources are less likely than full-flow makeup treatment to have significant waste minimization impacts, but the capital costs for the former are also much less than those for the latter.

Table 4-1 Impact of Makeup Treatment on Cooling Tower Blowdown Rate

	Untreated makeup	Treated makeup
Recirculating Water Flow Rate, gpm	50,000	50,000
Temperature Drop, °F	30	30
Cycles of Concentration	3	10
Makeup Rate, gpm	2,700	2,000
Blowdown Rate, gpm	850	150

4.13.2 Minimizing the Toxicity of Cooling Tower Blowdown

Cooling tower systems are treated to control deposition by the following means:

- Corrosion inhibition
- Biological growth control
- pH adjustment

Corrosion inhibitors pose the most significant toxicity issue because the most effective compound for this purpose, hexavalent chromium, is a hazardous constituent. Because chromate removal processes have operating problems and other difficulties, many refineries use non chrome technology. With close monitoring, performance of nonchrome inhibitors can approach that of chromate-based compounds. Selection of inhibitor type is a function of water quality, system metallurgy, and pH controls.

When hexavalent chromium is used, effluent treatment can be performed in a two-stage chemical reaction of the blowdown stream. The well-known chromate precipitation process produces a sludge that requires additional management for disposal. Waste flows are not altered but the chromate concentration is reduced from 20-50 ppm to less than 5 ppm in the unit effluent which should meet final effluent limitations for most refineries. Another technology for chromate recovery is ion exchange.

Biological growth control is commonly managed by chlorine vaporization into the cooling system. Some operators are utilizing other biocides or bromine donors as alternatives to chlorination.

Adjustment of pH is used to control carbonate scaling and other constituent solubility concerns. Control of pH is commonly achieved by the addition of sulfuric acid. Because acceptable pH control ranges in the recirculating water system, and thus in the blowdown, and within normal discharge limits, pH control has little impact on toxicity.

4.14 Miscellaneous Wastewater System Wastes

Much refinery waste is generated in the wastewater treating system. Biosolids are products of biotreatment methods used to remove organics from the wastewater stream. Chemical sludges can occur in the wastewater system when flocculent-producing chemicals are utilized. Even flow of clean water in the system can absorb organics from floating oil layers and lead to more organic loading and additional biosolids. The following sections discuss some alternatives that can reduce the amount of wastes generated in the wastewater system.

4.14.1 Replace Phenol Extraction

Some refiners utilize a phenol extraction process to remove wax compounds from lube oil feedstocks. This process usually involves numerous extraction machines and extensive distillation equipment to recover and reuse the phenolic material, which is very expensive and can cause high organic loading if spilled to the sewer system.

Elaborate valving and piping in the phenol extraction system creates a high potential for drips and leaks that tend to overload the wastewater system by producing a high organic loading. As a result, more biosolids are generated.

Several refiners have converted their existing extraction systems to replace phenol with less costly and less hazardous materials.

4.14.2 Changing Coagulation Chemical

In most refinery wastewater treatment systems, after primary gravity separation to remove oil and solids from wastewater in an oil/water separator, secondary physical separation takes place. This process normally removes additional oil and suspended solids before the wastewater is treated in a biological oxidation system. In U.S. refineries, the most frequently employed secondary treatment method is Dissolved Air Flotation (DAF); others include chemical flocculation with gravity settling, media filtration, and induced air flotation. Each of these approaches usually includes use of chemical coagulation and flocculation.

Coagulation is a process in which chemicals are added to wastewater to neutralize surface charges in the wastewater. Those charges cause suspended particles to repel each other, keeping the particles apart. In wastewater, the finely divided particles are predominantly negatively charged. Once these charges are neutralized or destabilized, the particles can be brought into contact with each other, so that they coagulate.

Coagulation technology has been used in raw water treatment to remove suspended material before providing water for domestic or industrial uses. Chemical anticoagulants include aluminum or iron salts such as aluminum sulfate [$Al_2(SO_4)_3.18O$], and ferric sulfate [$FeCl_3x4\ H_2O$]). Reactions with sodium bicarbonate in the water produce $Al(OH)_3$ and $Fe(OH)_3$ flocs.

Polyelectrolytes (water-soluble organic polymers), serve as coagulant aids to bridge across the small floc particles and produce larger, stronger particles that will settle rapidly without breaking up.

Successful operation of DAF units has been achieved by replacing alum or iron salts with all-organic systems. In a typical case, a cationic polymer is used to neutralize the particle surface charge and bring about the formation of pinpoint floc. An anionic polymer is then

used for agglomeration. With such a system, DAF float volumes have been reduced to 0.1 to 0.2 percent of feed volume, depending on wastewater quality.

4.14.3 Stormwater Diversion and Reuse

Many refineries have areas that collect stormwater which is free of oil and which contains very low natural contamination. Such areas include streets, parking lots, and certain tank farm areas that are segregated and often drain directly to storm sewers without treatment as long as the effluent permit conditions are satisfied. Use of stormwater as cooling tower makeup may be feasible in some situations, but there are several factors which would need careful consideration.

Asphalt emulsions require water to form oil-in-water emulsions. Stormwater is collected in diversion systems and pumped to the emulsion makeup water tank. The use of fresh water is discontinued as long as stormwater is available. Certain care is needed to filter out solids and trash before the water is reused.

Most stormwater collected from relatively clean areas will be low in hardness and dissolved solids and can be pumped to cooling tower makeup in lieu of fresh water. Trace amounts of oil should not present difficulty if care is taken to blend stormwater at a low rate. Because of the low hardness of stormwater, facilities for softening cooling tower makeup can be bypassed to avoid that treatment cost and reduce the amount of softening wastes that must be handled and disposed.

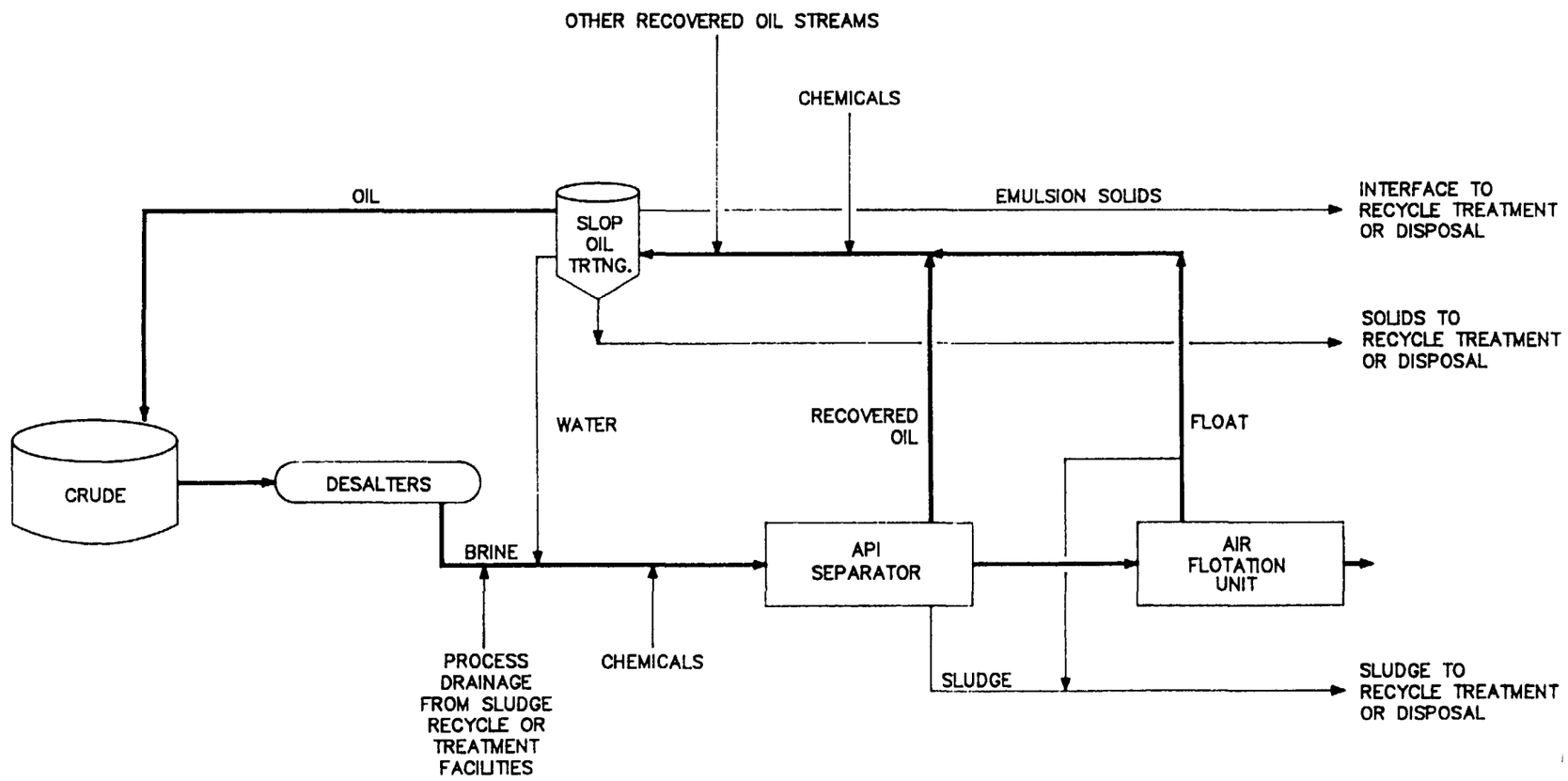

Typical Refinery Solids Recycle Loop

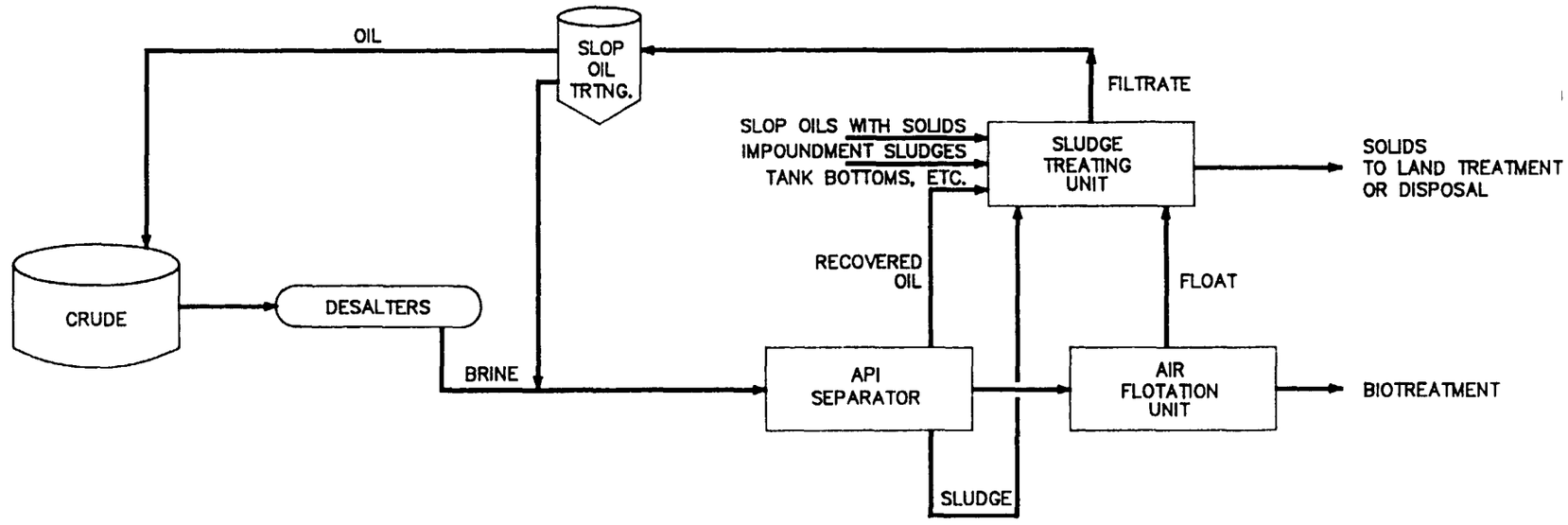
OIL
SLOP
OIL
TRTNG.
FILTRATE
SLOP OILS WITH SOLIDS
IMPOUNDMENT SLUDGES
TANK BOTTOMS, ETC.
SLUDGE
TREATING
UNIT
SOLIDS
TO LAND TREATMENT
OR DISPOSAL
RECOVERED
OIL
FLOAT
CRUDE
DESALTERS
BRINE
API
SEPARATOR
AIR
FLOTATION
UNIT
BIOTREATMENT
SLUDGE

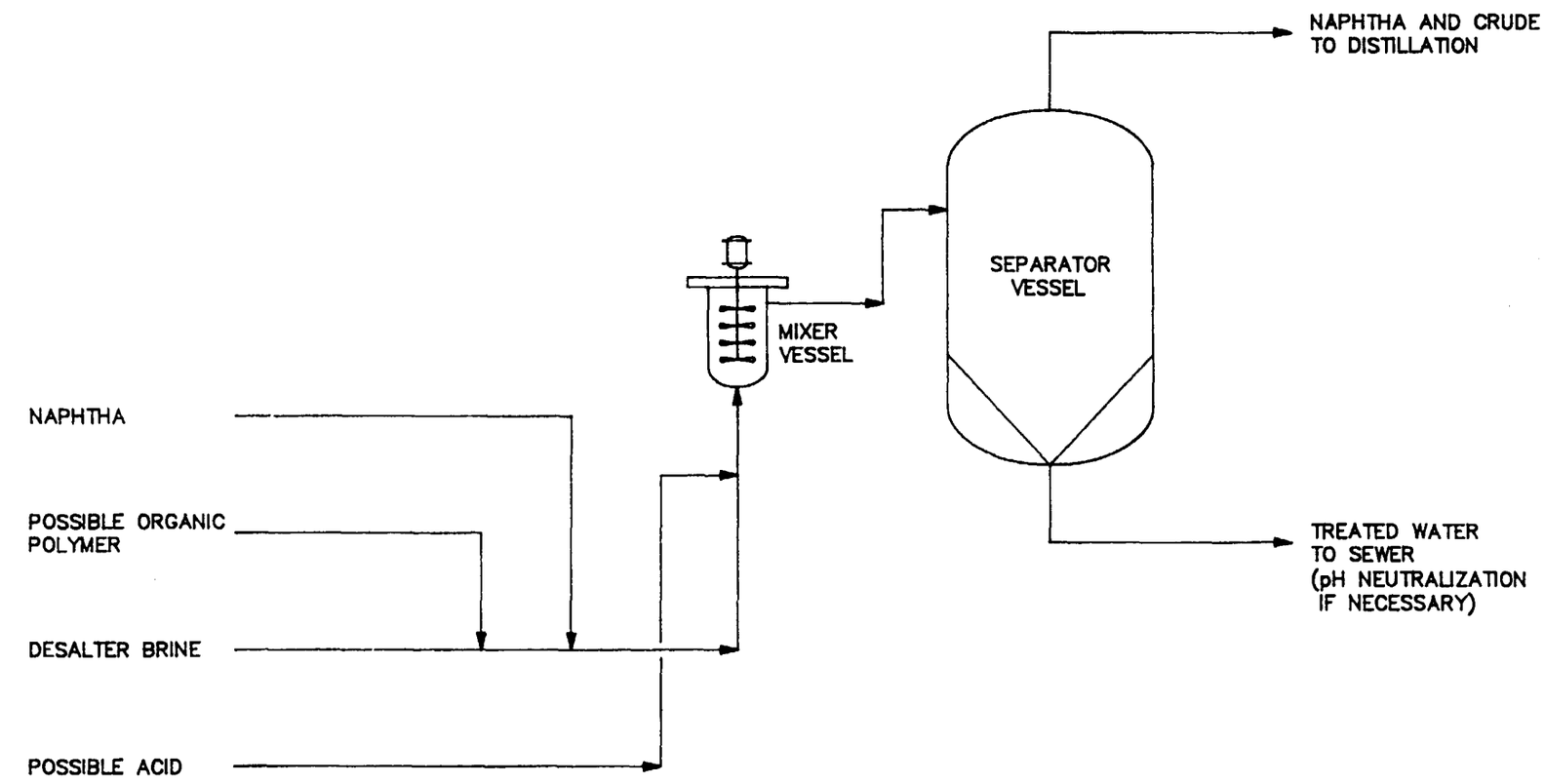
NAPHTHA AND CRUDE
TO DISTILLATION
SEPARATOR
VESSEL
MIXER
VESSEL
NAPHTHA
POSSIBLE ORGANIC
POLYMER
DESALTER BRINE
POSSIBLE ACID
TREATED WATER
TO SEWER
(pH NEUTRALIZATION
IF NECESSARY)

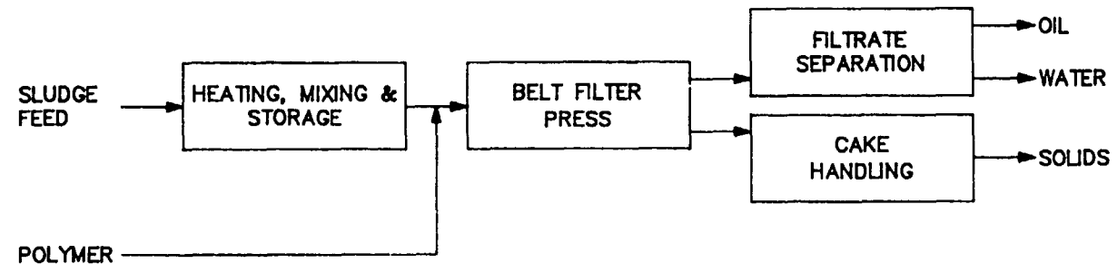

Figure 4.1-4: Belt Filter Block Press Flow Diagram

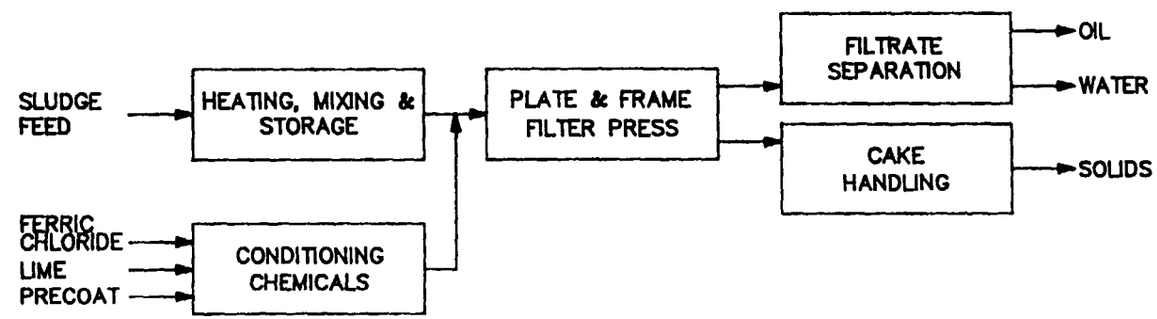

Figure 4.4.5 Plate Filter Press Block Flow Diagram

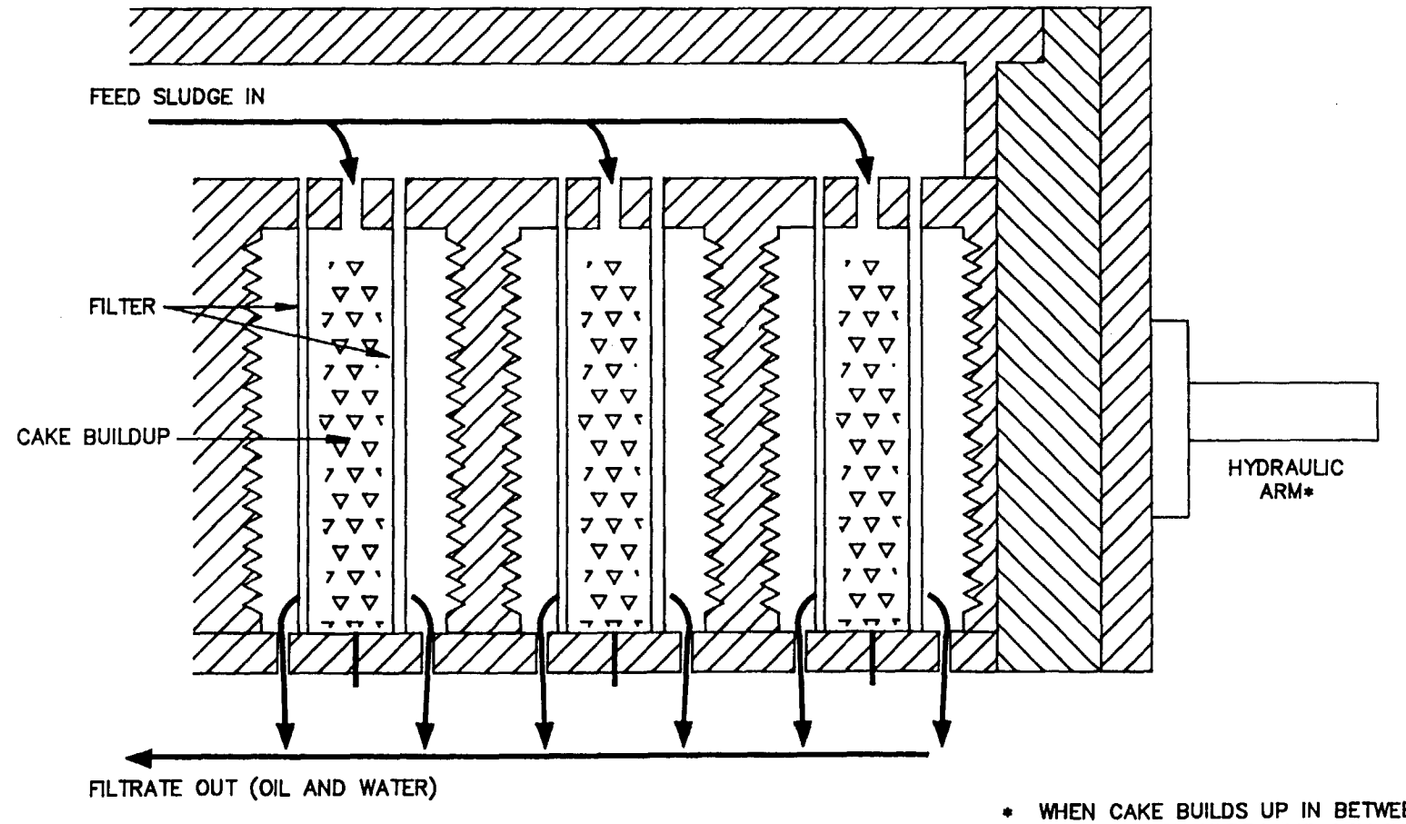

* WHEN CAKE BUILDS UP IN BETWEEN PLATES, PRESSURE ON HYDRAULIC ARM IS RELEASED AND CAKE DROPS OUT BOTTOM.

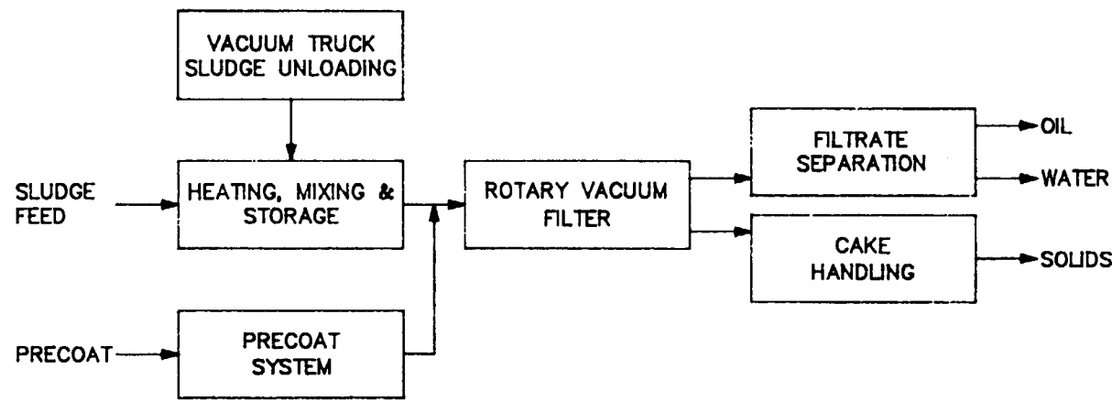

Figure 4.1-7: Rotary Vacuum Filter Block Flow

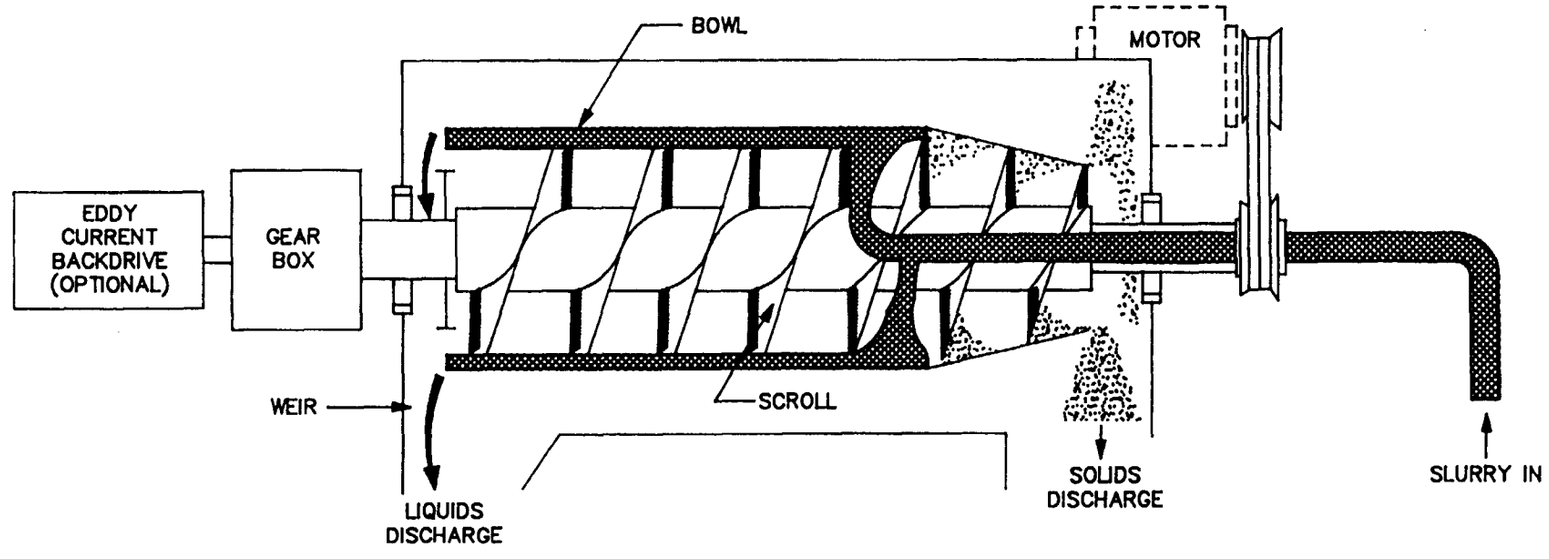
BOWL
MOTOR
EDDY CURRENT BACKDRIVE (OPTIONAL)
GEAR BOX
WEIR
SCROLL
LIQUIDS DISCHARGE
SOLIDS DISCHARGE
SLURRY IN

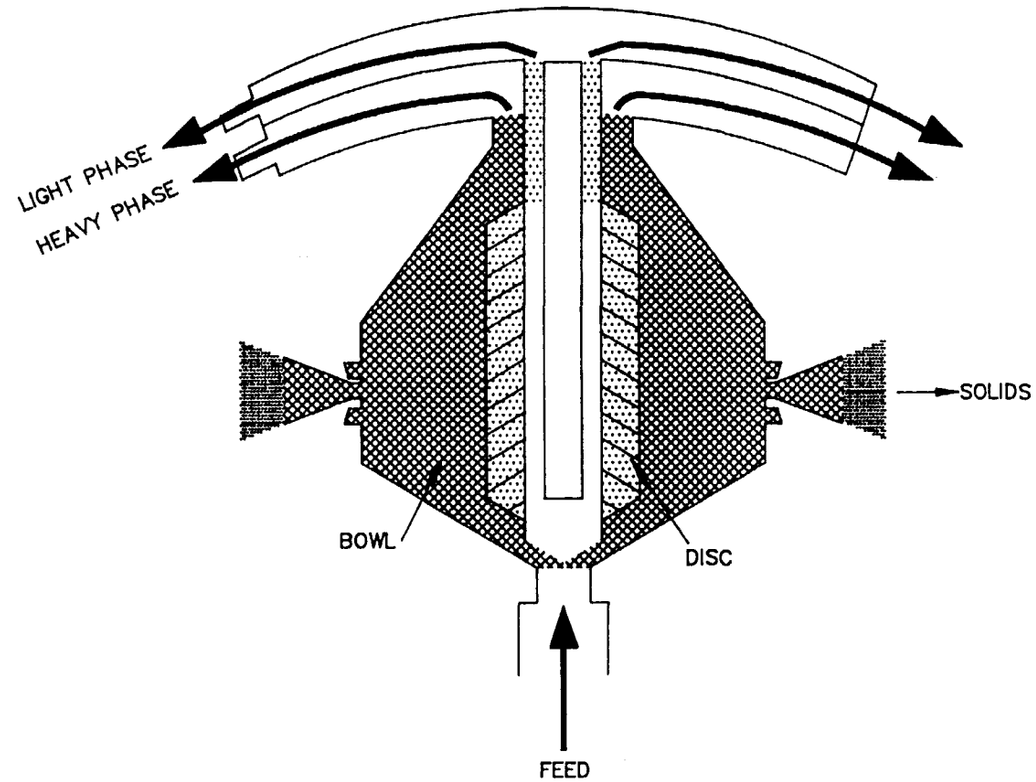

SEPARATOR BOWL CONFIGURATION FOR
SUSPENDED–BOWL TOP–DRIVEN NOZLJECTOR MODELS

Figure 4.1-9: Operation of a Disc Centrifuge

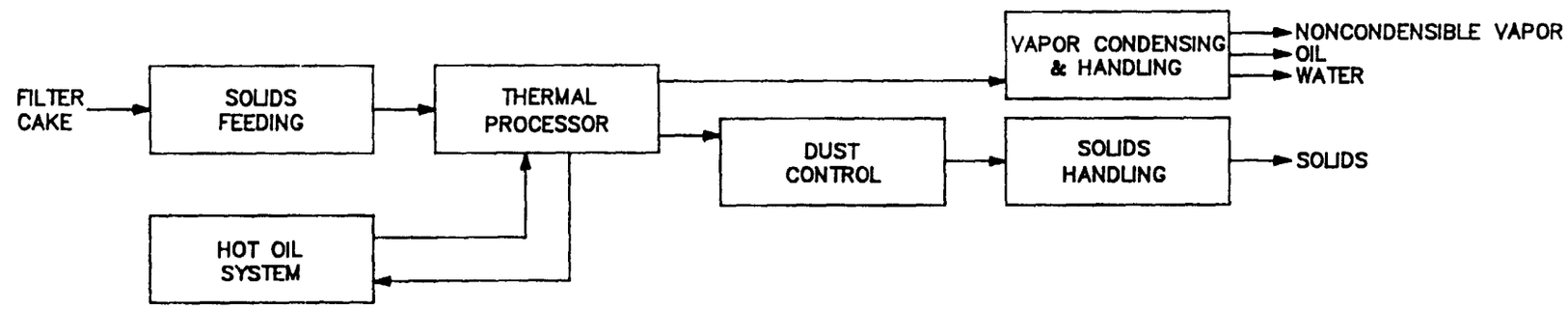

Figure 4.1.10: Thermal Treatment Process Flow Diagram

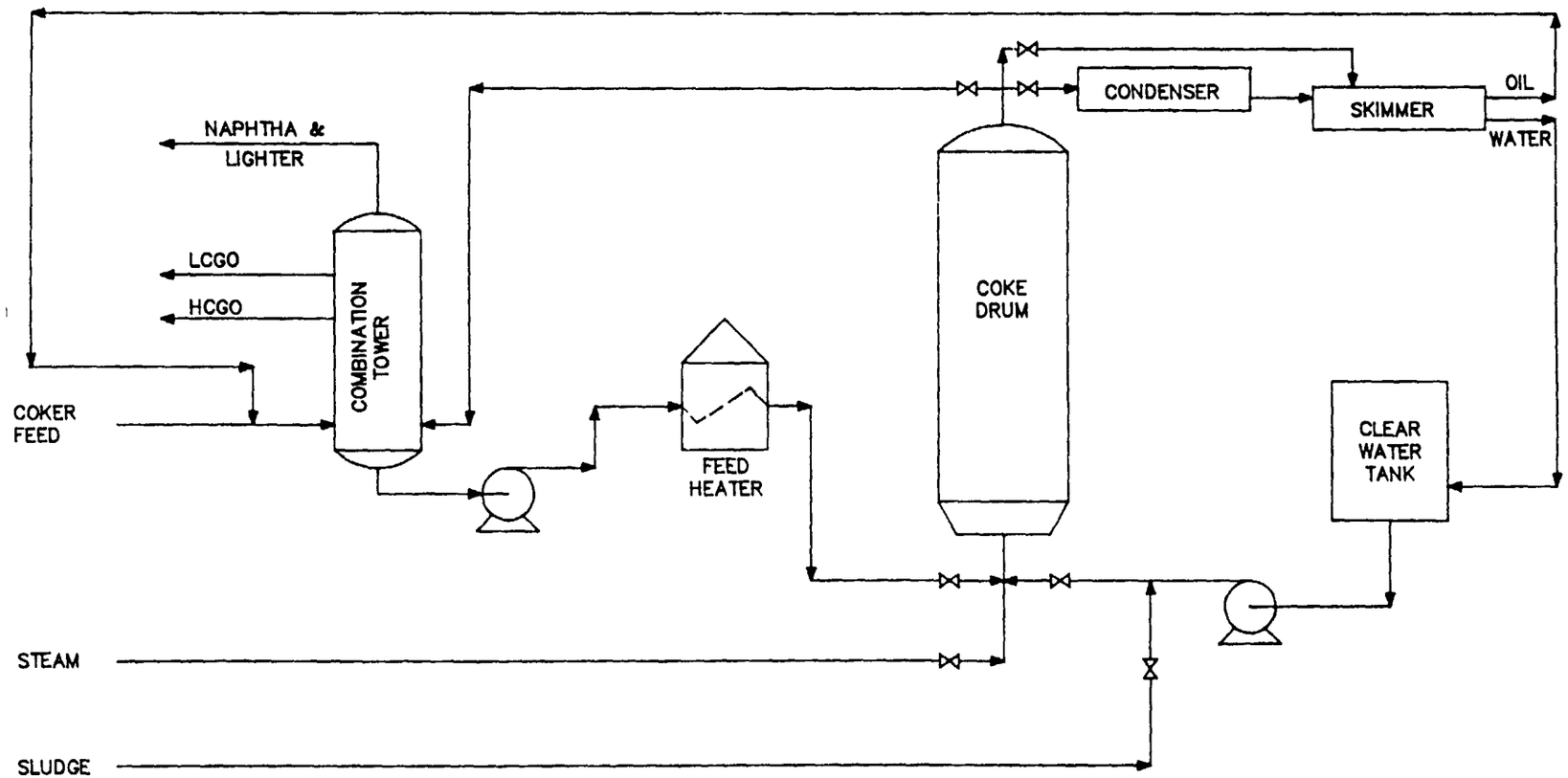

Figure 4.1-11: Process Flow Diagram Quench Water Injection

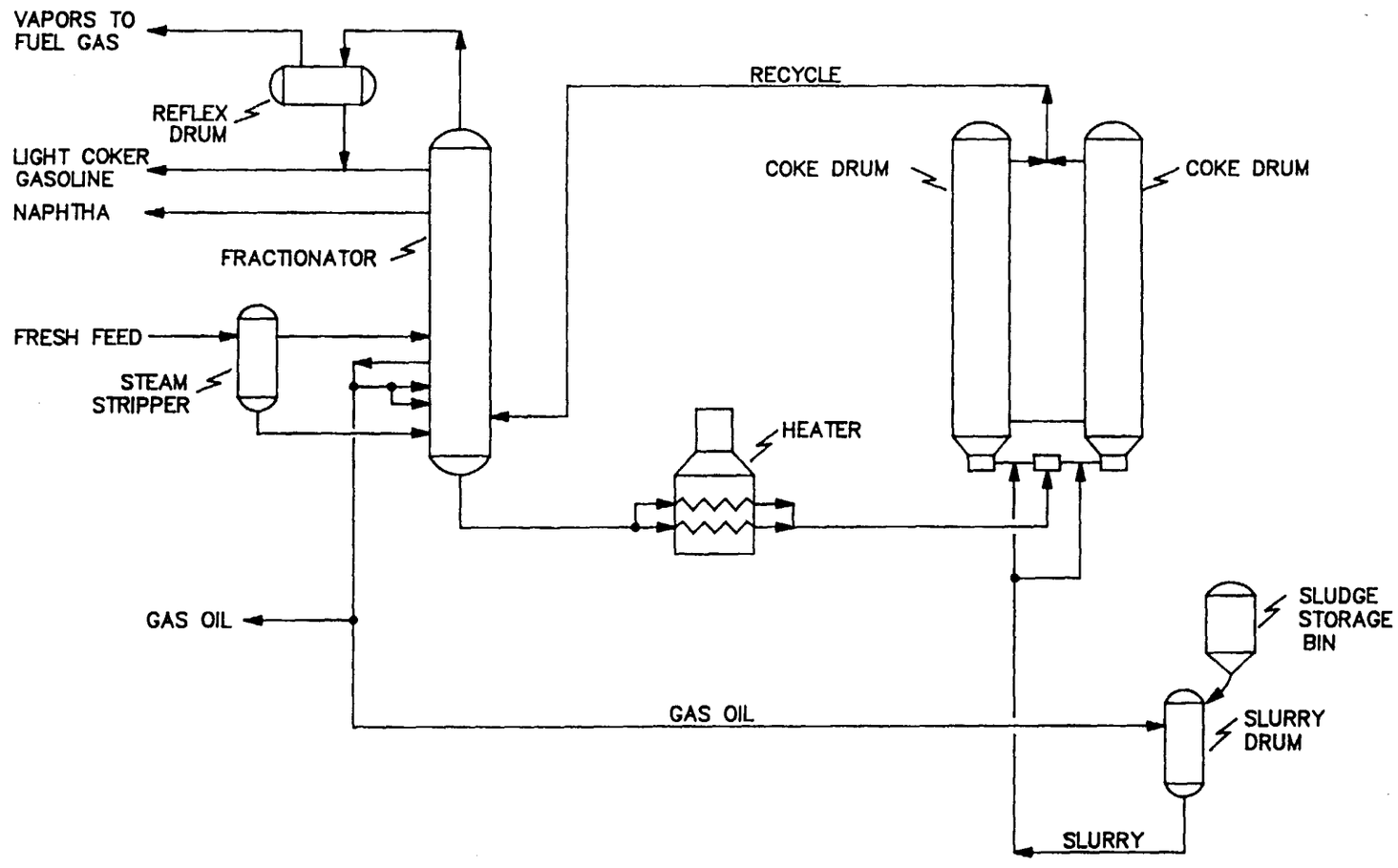
VAPORS TO
FUEL GAS
REFLEX
DRUM
LIGHT COKER
GASOLINE
NAPHTHA
FRACTIONATOR
FRESH FEED
STEAM
STRIPPER
RECYCLE
COKE DRUM
COKE DRUM
HEATER
GAS OIL
SLUDGE
STORAGE
BIN
GAS OIL
SLURRY
DRUM
SLURRY

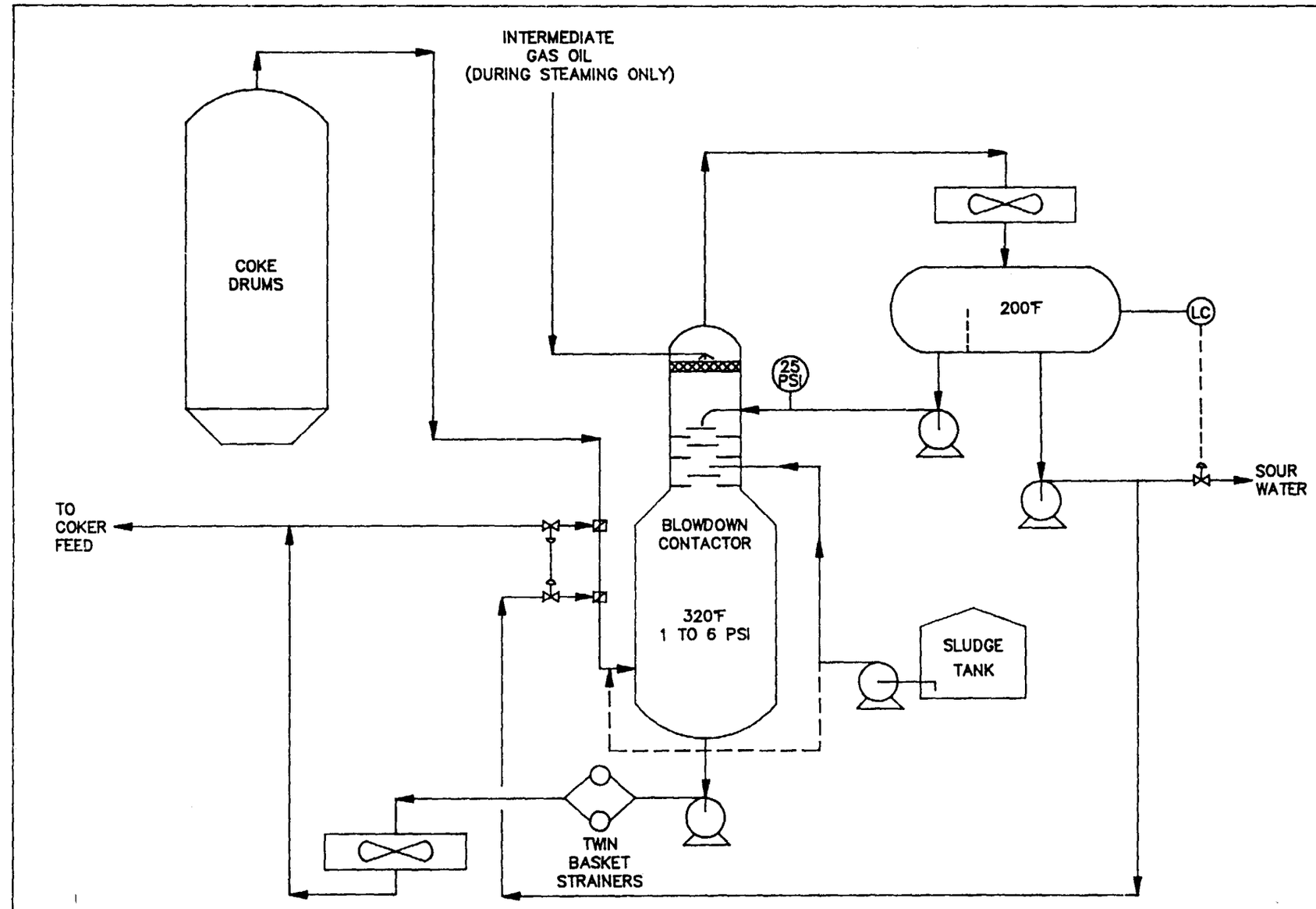

Figure 4.1.12: Process Flow Diagram Blowdown Injection

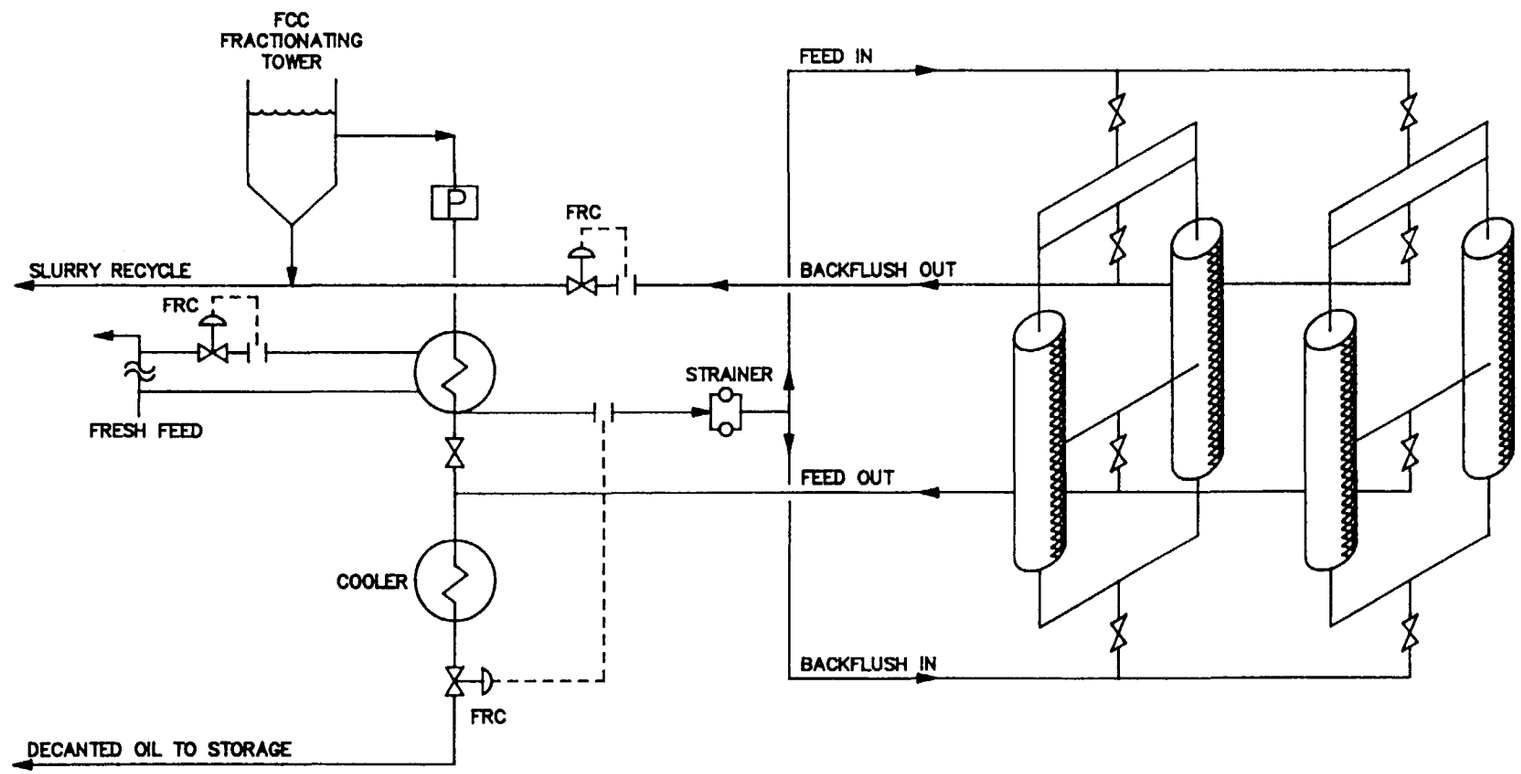

Figure 4.3-1: FCCU Decant Oil Catalyst Removal System Block Flow Di

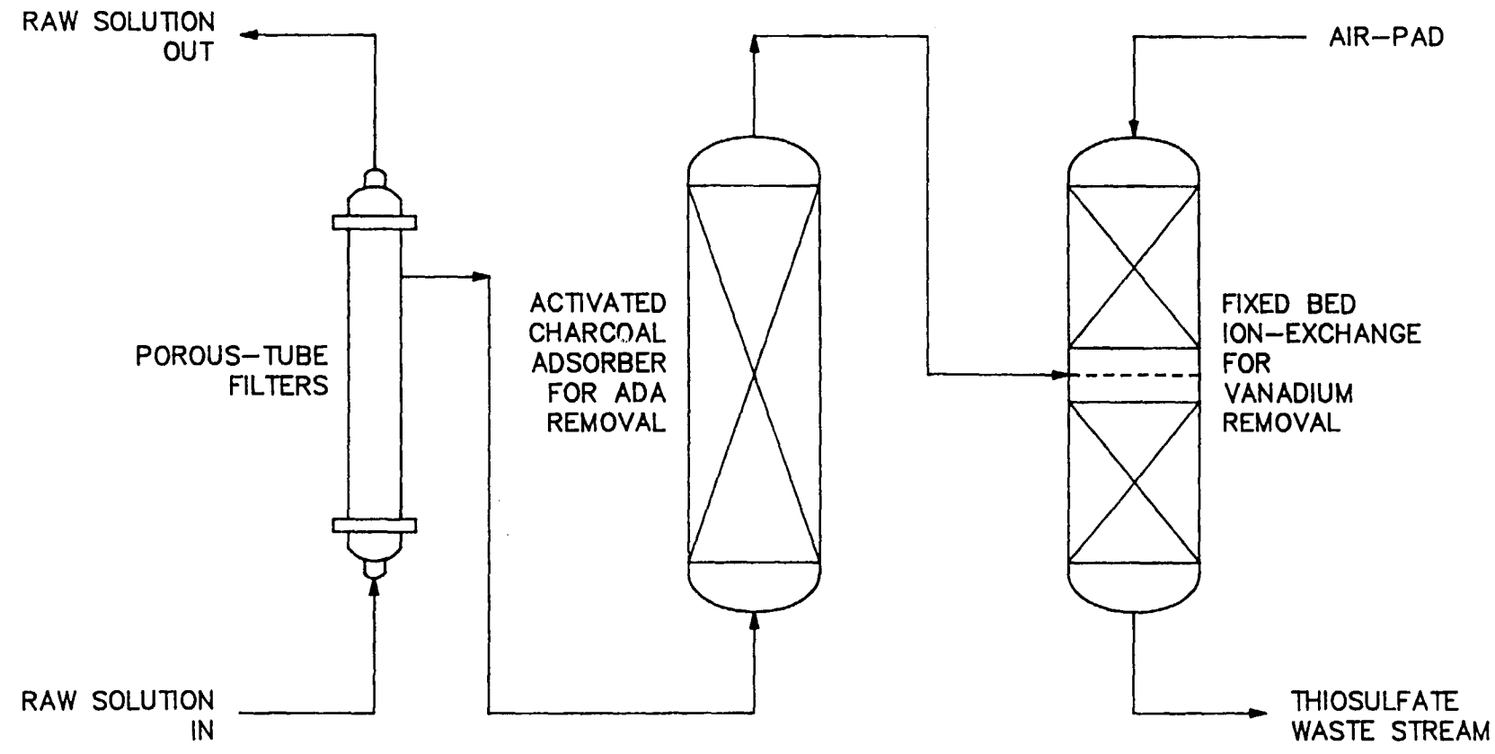

Figure 4.4.1: Recovery Process Block Flow Diagram

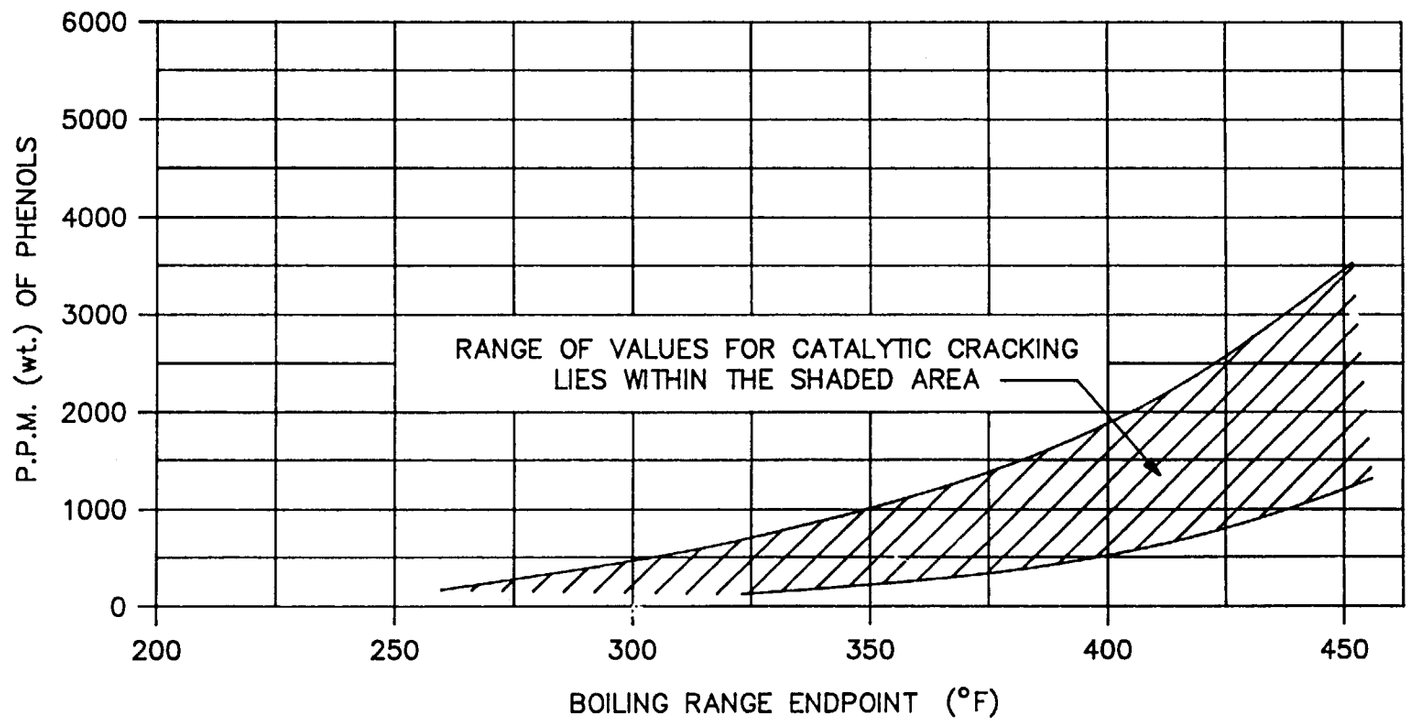
6000
5000
4000
3000
2000
1000
0
P.P.M. (wt.) OF PHENOLS
RANGE OF VALUES FOR CATALYTIC CRACKING
LIES WITHIN THE SHADED AREA
200
250
300
350
400
450
BOILING RANGE ENDPOINT (°F)

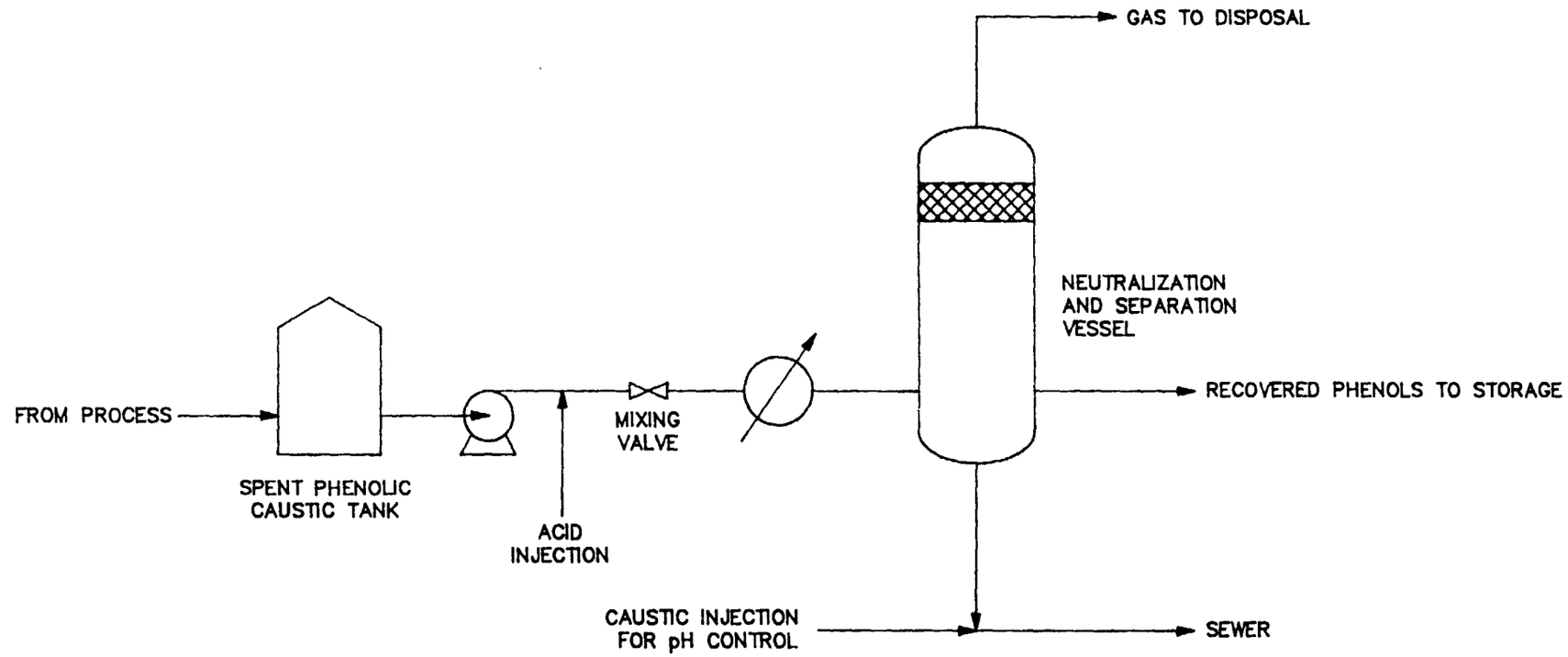
GAS TO DISPOSAL
NEUTRALIZATION
AND SEPARATION
VESSEL
FROM PROCESS
SPENT PHENOLIC
CAUSTIC TANK
MIXING
VALVE
ACID
INJECTION
RECOVERED PHENOLS TO STORAGE
CAUSTIC INJECTION
FOR pH CONTROL
SEWER

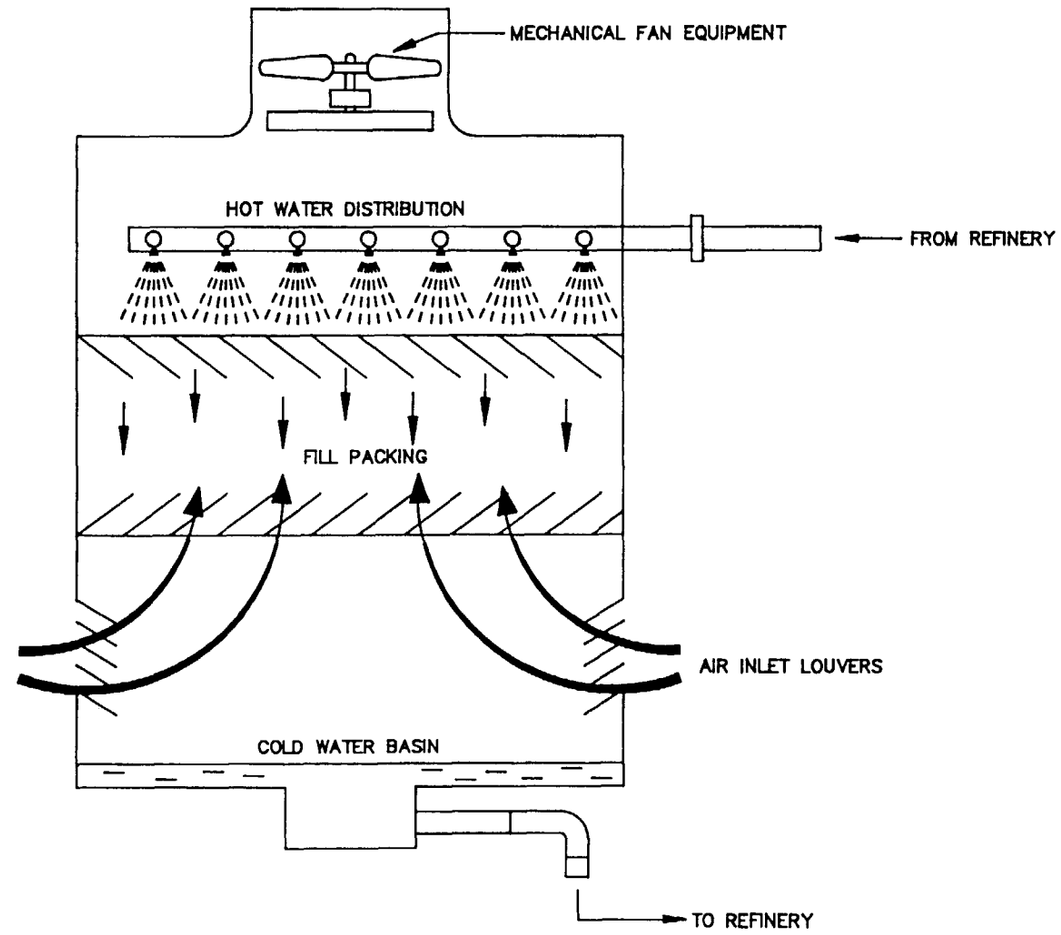

Figure 4.12.1: A Simplified Sch

Refining Waste Minimization Practices
Case Study 4-1: Street Sweeper to Reduce Oily Sludges

Introduction

A large refinery on the Gulf Coast was experiencing accumulation of sludges in the API separation system in excess of 15,000 tons per year (tpy). Since the annual rainfall was typically high, it was believed that dust accumulations on the paved streets were contributing significantly to the separator sludge during rainstorms. After the dust reached the sewer system, emulsions and sludges were formed with the solids, oil, and water in the system. This combination effect led to settled sludge that should be removed and disposed.

Laboratory data indicated that this sludge was 6% oil, 17% solids, and 77% water and that it contained significant amounts of benzene, ethylbenzene, and toluene, but fairly low concentrations of TC metals.

Description of Waste Minimization Practice

In an effort to reduce dust deposits in the sewer system, a trial run was made using street sweepers to vacuum up the dust. One sweeper provided by a local industrial sweeping company was used concurrently with a company-owned sweeper over the 120-day trail period.

Effectiveness

During the four-month case study, approximately 510 tons of dry solids were collected and prevented from entering the sewer. This rate of collection extrapolates to slightly over 1500 tons per year. Assuming that typical API separator sludge contains 17% solids, the sweeper program has the potential to reduce overall sludge production by about 8800 tons per year or about 50%. The long-range effectiveness of this program appears to be good.

Costs

The contract sweeper was provided and operated for $560 per day. The company-provided sweeper cost $85,000. Manpower, maintenance, and utility costs are not known.

Refining Waste Minimization Practices
Case Study 4-2: Reuse of FCC Fines

Introduction

Catalyst fines from a Fluid Catalytic Conversion Unit (FCCU) are costly to dispose in some states. Instead of mixing the fines with water to form a slurry for disposal, one major West Coast refinery is shipping the fines to a cement producer who reuses the material to produce cement. Cement manufacturers can use the FCC fines as an effective substitute for bauxite because the fines consist largely of alumina and silica. Alumina is an essential ingredient in the production of cement.

Description of Waste Minimization Practice

In order to recycle FCC fines, the refinery had to make certain that the fines were of acceptable quality to the cement manufacturer. Testing of the FCC fines was critical on both counts. The cement manufacturer would not accept the fines unless the alumina concentration of the fines was at least 45%. Testing also indicated that the concentration of trace metals was less than 1%, so that clinkering would not be hindered. The refinery also had to ensure that the material was dry and free-flowing so that it could be transported pneumatically.

When the spent FCC fines are recycled, they are not legally classified as a waste. Additionally, the refinery inspected the trucking and handling of the spent FCC fines at the cement manufacturer to determine if there were any downstream liabilities in the proposed approach. A number of potential recyclers were eliminated because of apparent industrial health and safety deficiencies. The refinery contracted with an experienced hauler to transport the FCC fines to the cement manufacturer.

Effectiveness

Recycling eliminated all of the disposal fees and taxes previously associated with landfilling the spent FCC fines. Based on a FCC fines generation rate of 2200 tpy, disposal fees were reduced by $242,000 annually.

Costs

Additional analytical data were needed to quantify the composition of the FCC fines. The refinery also expended considerable time and effort to identify a qualified trucking company and cement manufacturer. After these costs were incurred, the refinery's only obligation was trucking the material. Cost of trucking the FCC fines to the cement manufacturer was on the same order of magnitude as the cost of trucking the waste to a disposal facility--approximately $30/ton.

Refining Waste Minimization Practices
Case Study 4-3: Alternative Sandblast Media and Recycle

Introduction

Sandblasting is a common means of preparing tanks, process units, and piping prior to painting or applying other coatings. Normally, after the sand is used, it is disposed because it is contaminated by paint that contains hazardous components or which has been pulverized to such a degree that recycling is not feasible. To reduce acquisition and disposal cost of the blast sand, one major refinery employed a contractor to supply and recycle an alternative blast medium, aluminum oxide.

Description of Waste Minimization Practice

Sand traditionally used in blast equipment was replaced by aluminum oxide. Aluminum oxide was selected as the blast medium because it offered three advantages over sand:

- Aluminum oxide is more resilient to degradation.
- The chemical composition and particle size distribution after blasting poses a lower hazard risk than sand.
- Aluminum oxide is denser and more resilient, making recycling viable.

The aluminum oxide is used in the same blast equipment as before. After blasting, the aluminum oxide is collected and processed through an on-site recycle plant. The recycle plant is essentially a three-step process of grading. A cyclone is used to separate reusable blast medium from paint and fines. The paint and fines are captured in a baghouse and disposed in a nonhazardous landfill. Recovered blast medium is air-washed and blended with new material to bring it up to specification.

Effectiveness

The new process has reduced the amount of blast medium that must be disposed of by 90%. Furthermore, because the blast medium does not contain hazardous concentrations of metals, the spent aluminum oxide can be disposed of as a nonhazardous waste, which further reduces disposal costs. Instead of disposing of approximately 3100 tons per year (tpy) of hazardous spent blast sand, the refinery is only disposing of 310 tpy of nonhazardous aluminum oxide.

Costs

The capital cost for this recycle plant was approximately 1.5 million dollars. This cost, however, was borne by the vendor. The refinery agreed to purchase enough of the aluminum oxide (new and recycled) at $200/ton to justify the vendor's capital expenditure. The refinery reports that the fuel oil consumption for the recycle plant is approximately 11,000 gallons per year and estimates maintenance expenses at $60,000 per year.

Refining Waste Minimization Practices
Case Study 4-4: Deoiling of Desalter Effluent

Introduction

A West Coast refiner has a desalter producing 13,675 tons per year (tpy) of oily water containing approximately 6.3 weight percent oil and 0.1 weight percent solids which would ordinarily be discharged to the refinery wastewater system. If allowed in the wastewater system, the oily water forms sludges and emulsions that would have to be removed and disposed.

Description of Waste Minimization Practice

As part of original construction, the refiner installed an oily water treatment unit downstream of the desalter. The purpose of the unit is to remove insoluble oil from desalter wash water containing emulsified oil. Figure C-4-4 is a simplified flow diagram showing a typical system.

The oily water stream from the desalter is contacted with 1647 tpy of naphtha and a surfactant chemical. The water-oil-solvent stream is mixed in an in-line, low-shear mixer and proceeds to the main separator vessel, where an electrostatic field is established to maintain a sharp hydrocarbon/water interface and to assist in the separation process. The separation occurs because of density differences between the two phases.

The distillate solvent containing oil extracted from the water exits the top of the main separator and is sent to crude oil storage. Oil-free water (12,800 tpy) is discharged from the bottom of the vessel and proceeds to the refinery disposal system.

Effectiveness

The oily water treatment unit removes approximately 862 tpy of oil. Treated wastewater typically contains 100 to 500 ppm oil and grease and 25 to 200 ppm solids. Assuming an API separator sludge composition of 70% water, 20% oil, and 10% solids, sludge generation is reduced by at least 122.4 tpy. At a nominal $200/ton disposal cost, annual disposal cost savings would be $24,500/year. The user reported initial difficulties with the mixer supplied with the treatment unit, and installed an in-line mixer to replace the original equipment. Aside from this modification, the unit has operated for nine years with very little maintenance. The long-range effectiveness of this system appears to be good.

Costs

The capital cost of the oily water treatment unit is approximately $60,000. Naphtha use amounts to 525,600 gallons per year and Naphtha is recovered. Approximately 730 gallons per year of surfactant chemicals are used (1979 average cost for surfactant chemical was $10.93/gallon). Electrical power consumption for this unit is not known.

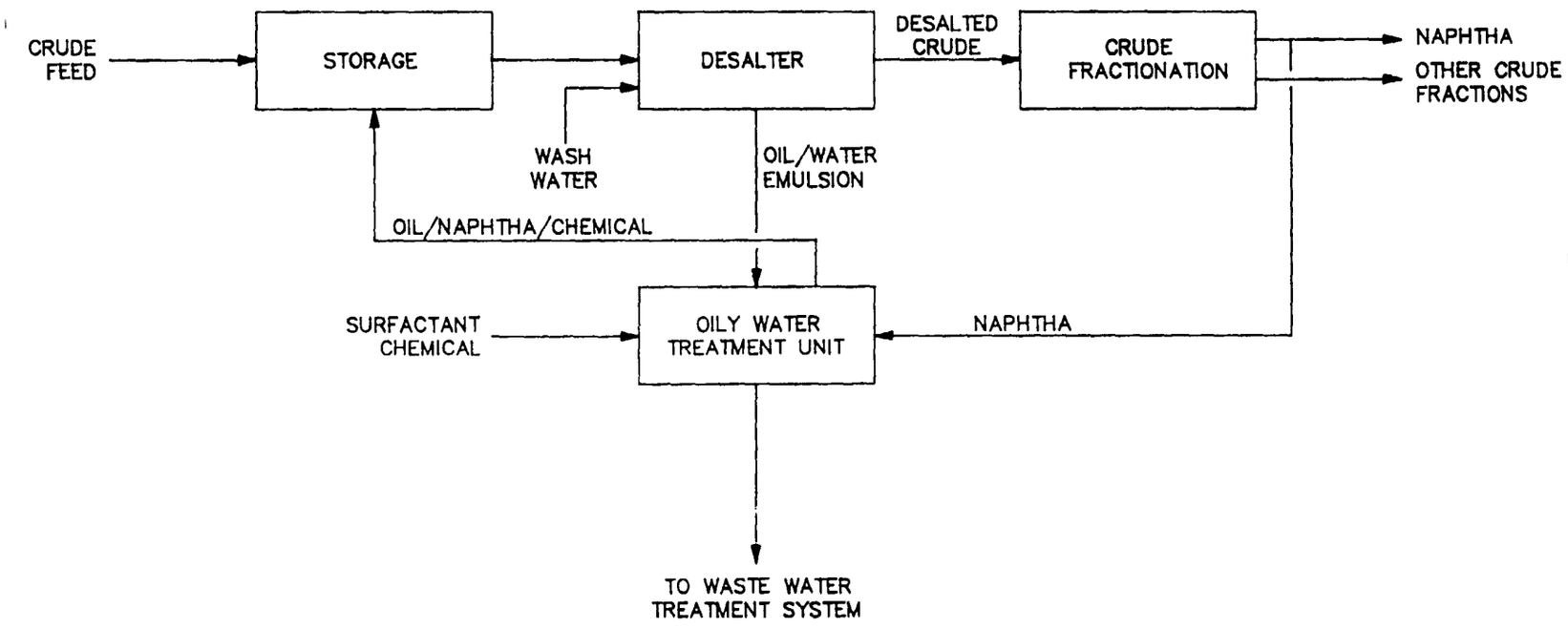

Figure C-4-4: Deoiling of Desalter Effluent

Refining Waste Minimization Practices
Case Study 4-5: Screening of Solids from Exchanger Cleaning

Introduction

A midwestern refinery hydroblasts solid residue from heat exchangers. The solid residue entered the sewer along with the blasting water and produced additional oily sludge in the wastewater system.

Description of Waste Minimization Practice

The heat exchanger hydroblasting operation generates 50 tons per year (tpy) of solids, 451 tpy of water, and 25 tpy of oil. Screens are placed in the oily water sewer at the location where the hydroblasting operation is performed. The screens collect the solid material but allow the water and oil to pass to the wastewater treating system. After the hydroblasting process is complete, the screens are removed from the sewer and the accumulated solids are disposed.

Effectiveness

The refinery reports that 50 tpy of solids are collected dry enough to go to disposal directly without further dewatering. If the same solids had gone to the API separator, they would have been removed with large volumes of water which would have required an additional dewatering step.

Costs

The screens are included as part of the hydroblasting contractor's scope of work. The incremental cost for the screens is not known.

Refining Waste Minimization Practices
Case Study 4-6: Spent Jet Fuel Treater Clay Deoiling

Introduction

The final step in the production of jet fuel is typically filtration through clay towers. The clay retains impurities in the fuel remaining from prior refinery steps. Spent treater clay with entrained jet fuel must be disposed in a hazardous landfill.

A West Coast refinery generates approximately 1100 tons per year of spent filter clay, which contains approximately 30% jet fuel.

Description of Waste Minimization Practice

The waste minimization practice used at this site consists of spent clay washing. After the jet treater clay is exhausted, water is injected into the vessel containing the spent clay continuously for three days to flush out the entrapped jet fuel. The wash water is sent to a tank where the two immiscible phases separate. The recovered jet fuel is then recycled. The stripped solid clay has been rendered nonhazardous, and it can be dumped into roll off bins and sent to a nonhazardous landfill.

Effectiveness

Water washing entrapped jet fuel from spent treater clay converts a hazardous waste into a nonhazardous waste, greatly decreasing disposal costs. Approximately 2,000 barrels per year of jet fuel is recovered and recycled.

Costs

Capital costs are insignificant if existing piping and tankage are used. Operating costs are minor and consist of the cost of the wash water and operator hours.

Refining Waste Minimization Practices
Case Study 4-7: Sludge Coking

Introduction

A large integrated refinery on the East Coast was disposing of oily sludge at an on-site land farm. Sludge was generated at a rate of 200 BPD and consisted of DAF float, API sludge, slop oil emulsion solids, biosludge, and tank bottoms. Composition of the sludges was 5% oil, 30% solids, and 65% water.

Description of Waste Minimization Practice

In 1975, the refinery modified its delayed coking unit, which produced 2200 TPD of fuel grade petroleum coke, to inject the above oily sludge and biosludge. In the new process, the sludge is injected into the quench water during the quench cycle of the delayed coking process. The attached Figure C-4-7 depicts the flow scheme.

The volatiles in the sludges are flashed overhead and recovered in the blowdown system. Heavy hydrocarbons and solids are incorporated in the coke matrix and become part of the coke product, which is sold for its fuel value.

Effectiveness

Land disposal of the waste was eliminated, and the hydrocarbons in the waste were recycled to produce fuel and coke products. The average ash content of the product coke increased slightly from 0.20 wt% to 0.25 wt%.

Costs

In 1975, the approximate capital cost of the system was $150,000. Today's cost would be $200,000 to $300,000. There are no incremental manpower requirements because current staff operators can run the system. Utility requirements are estimated at $90,000 per year including in-plant transportation. Overall operating costs are estimated at $2 per barrel of sludge including capital charges. Off-site, hazardous waste disposal would cost on the order of $40 per barrel.

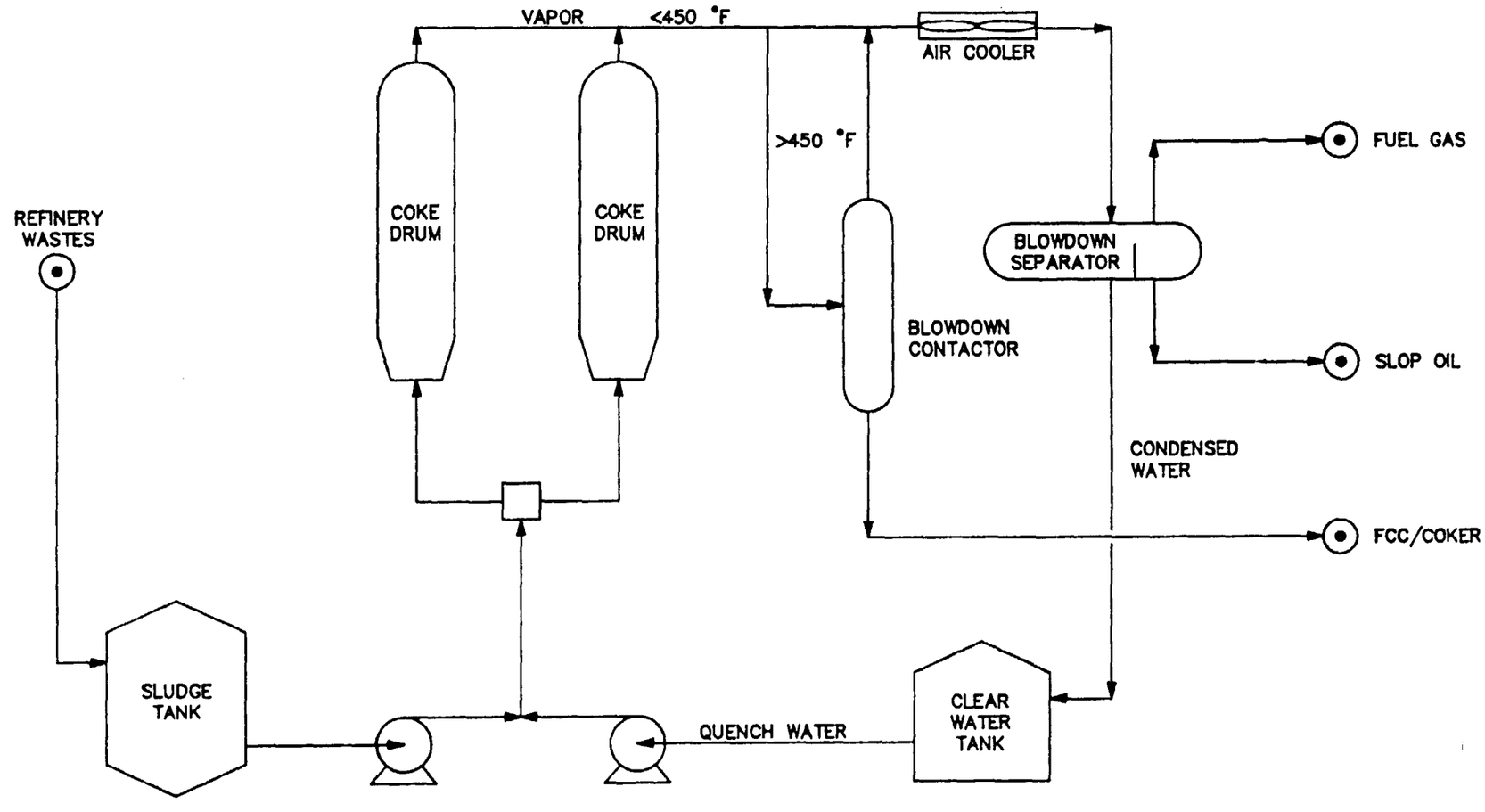

Figure C-4-7: Sludge Coking Process

Refining Waste Minimization Practices
Case Study 4-8: Chemical Recovery Process

Introduction

A U.S. refinery operated a Stretford unit as a tail gas treatment facility downstream of a Claus sulfur recovery unit. The capacity of the Stretford unit was approximately 5 long tons/day. While a Stretford process is intended to convert hydrogen sulfide in the gas being treated to elemental sulfur, a small percentage of the hydrogen sulfide is converted into fixed sulfur salts such as thiosulfate and sulfate.

The buildup of these salts can be tolerated up to certain levels. As the salt concentration increases, however, active solution must be dumped or purged to control the buildup. This particular refinery periodically dumped solution and sent it to off-site disposal. The possibility of the off-site disposal being curtailed and the costs of disposal and chemical make-up prompted the refinery to investigate alternatives.

Description of Waste Minimization Practice

A small Stretford Chemical Recovery Process (SCRP) unit was installed. A purge stream was pulled off the discharge of the circulating Stretford solution pumps. The purge was directed to a small solution storage tank where sulfur particles in the solution were allowed to settle. Solution from the tank was pumped to the SCRP unit for processing to recover the active chemicals in the solution. The treated solution was discharged to the refinery wastewater system, and the recovered chemicals were returned to the Stretford unit in the form of a regeneration stream.

This SCRP unit was undersized relative to the capacity of the Stretford unit. The SCRP unit could process approximately 700 gal/day purge, whereas design material balance calculations indicated that a 1600 gal/day unit was required to match the capacity of the Stretford unit.

Effectiveness

During the three years prior to installing the SCRP unit, solution inventory was partially dumped and disposed every 2½ months. After the unit was installed, the frequency of dumping was reduced to once per year. During the three years before implementing chemical recovery, the quantity of solution disposed averaged 225,000 gal/year. SCRP reduced disposal to an average of 25,000 gal/year. A full-size unit would have eliminated solution dumping entirely.

Costs

Solution disposal at the time cost about 30 cents/gal. Consequently, $60,000 per year in disposal costs were saved through use of the process. In addition, chemical make-up cost savings were approximately $120,000 per year.

A new, full-size unit was designed for this application. It was estimated to cost $750,000. The disposal and chemical make-up cost savings after subtracting operating and maintenance costs resulted in positive cash flows that gave the project a 15% discounted cash flow rate-of-return.

5 Marketing Waste Minimization

Marketing facilities are widespread and diverse with varying degrees of complexity. They range from small gasoline-dispensing retail outlets to large, storage and distribution terminals and more complex facilities including manufacturing plants dedicated to grease compounding and oil blending. Depending on the types of activities in the marketing facility, marketing waste streams may need to undergo analysis, especially the TCLP, to determine whether they are subject to hazardous waste disposal requirements.

The "typical" marketing facility is neither complex nor sophisticated. The primary function of the marketing chain is the receipt, storage, mixing and blending, distribution, and ultimate sale of refined products to the consumer. Because of the nature of such functions, the marketing phase produces only relatively small quantities of wastes on an intermittent basis. These wastes encompass oily sludges from sumps, drains and separators; off-specification oils from product blending, laboratory testing, and off-specification products; used oils from normal operations; emulsion-causing cleaners, solvents, detergents, and acids; small quantities of toxic additives; solid waste from auxiliary products including tires, batteries, vehicle parts, and oily rags; contaminated soils from prior spills; waste products resulting from housekeeping and maintenance procedures; and potentially contaminated stormwater runoff.

Described below are examples of waste minimization practices, and is by no means exhaustive.

5.1 General Procedures for all Marketing Facilities

Prevention of oil releases constitutes the first significant step toward total waste minimization at marketing facilities. Safeguarding against spills and leaks is best handled through good housekeeping, maintenance, and inventory control procedures. No facility should overlook the use of any possible release detection systems or procedures, including the daily use of an inventory control system (See API Publication 1621, "Recommended Practice for Bulk Liquid Stock Control at Retail Outlets" and Bulletin 1623 "Recommended Good Practices for Bulk Liquid - Loss Control in Terminals and Depots").

If a release does occur, prompt recovery of spills and leaked products should be accomplished to prevent the residue from mixing with various facility streams, particularly the uncontaminated stormwater runoff.

Another important factor is to prevent emulsion-forming materials from getting into facilities' wastewater treatment systems. Soaps, detergents, chemicals utilized in plant and automotive cleaning, and acids and cutting oils can form emulsions that defeat the effectiveness of oil-waste separation equipment. Therefore, the isolation and containment of cleaners, chemicals, oils and emulsions formed is suggested.

5.2 Classification of Marketing Segment Facilities

While storage, manufacturing, and retail facilities each require individually tailored source contamination prevention procedures, good housekeeping and maintenance should be considered at all outlets. Because of the diversity of operations and the variation in contaminants handled, procedures for minimizing waste will be addressed separately for the following marketing segments:

- Storage and Distribution Facilities - These operations conduct no manufacturing; rather, they are engaged strictly in the storage and distribution of light petroleum products.

- Complex Facilities - These sites handle a full range of petroleum products including heavy oils. This category includes plants where activities such as ballast receiving, aviation servicing, lube oil blending, or grease compounding are conducted.

- Retail Outlets - This segment includes the full range of service facilities that provide finished product and service to the ultimate consumer.

Overlapping of programs across categories will be discussed as appropriate.

5.3 Refined Product Storage and Distribution Terminals and Bulk Plants

The petroleum industry maintains about 35,000 bulk plants and terminals for receipt, storage, and distribution of refined products. Distribution terminals receive refined products by pipeline or marine transport while bulk plants, which are normally smaller, receive products by truck and occasionally by rail tank car.

Under normal circumstances, the volume of operational discharge from individual plants is relatively small. Additionally, some contaminants can be successfully recycled, consumed, or safely disposed of if appropriate programs are initiated.

5.3.1 Terminal and Bulk Plant Yard Areas

At most terminals, the yard area is surfaced with asphaltic concrete or other impervious material. These areas should be maintained according to best management practices. The areas should be swept routinely. Leaks and spills should be contained and all contaminants released from operating areas should be isolated and treated separately so that stormwater is not contaminated.

5.3.1.1 Stormwater Runoff

Stormwater runoff constitutes the principal discharge from marketing terminals. Wet weather discharge of uncontaminated stormwater can range from 200,000 gallons/year at a typical bulk plant to more than 5 million gallons/year at a large terminal. Stormwater discharges may need to be handled in accordance with the appropriate permits issued under the regulations on stormwater discharges.

In order to accomplish the successful isolation of this large volume of uncontaminated stormwater from operational water streams, a complete survey of the product storage and handling areas may need to be conducted. Contaminated aqueous effluent from plant operations may be isolated from stormwater drainage, then treated and discharged in accordance with appropriate permits or transferred to another location for appropriate treatment and discharge. Alternatively, where complete isolation of petroleum streams can be accomplished, effective recycling or reuse on-site may be used.

The dry weather flow from terminals is composed mainly of truck wash water, sanitary waste, boiler blowdown, waste from maintenance bays (such as antifreeze, used oil, solvents and various cleaners, degreasers, and aluminum truck acidic brighteners) ballast water off-loaded from vessels, and discharges resulting from floor, equipment, and loading rack slab washing. Specific areas where there is potential for product and/or contaminant release and typical corrective measures to prevent this discharge are discussed in the following sections.

5.3.1.2 Filter Separators

During normal operation, correctly functioning filter separators should not release any contaminants to the environment. Because these filters treat oils such as kerosene, any spillage during changing or recharging of the filter media will release persistent products which, if not immediately cleaned up, can contaminate rainwater in the future. During maintenance and filter removal, absorbent work pads can prevent oils from infiltrating the ground.

5.3.1.3 Air Eliminators

Properly installed air eliminators will minimize the release of contaminants. Efficient collection, containment, and removal of water and oil particles expelled during normal air eliminator operation will also help prevent any release. In most cases, collection of waste product can be accomplished by piping both the water and air release outlets directly to a collection tank. Periodic routine checks must be made to ensure that the collection tank does not overflow. When there is a possibility of overfill of the collection tank following malfunction of the separator, waste products can be directed to a containment area. Alternatively, an automatic alarm can be installed to alert plant personnel of the need to drain the system. Oil removed from the collection tank can be returned to storage while

the small quantity of contaminated water and solids can be readily disposed of with other treated plant effluent.

5.3.1.4 Loading Racks

Truck loading operations at terminals and bulk plants can provide a significant source of oil that can contaminate rainwater runoff. A means of waste minimization in the loading rack area is to minimize the rainfall coming in contact with this oil. Roof canopies over the loading slab are an effective way to minimize contamination because they enable stormwater falling on the roof to be routed through drains to uncontaminated areas. In addition, it may be useful to extend existing roof canopies to cover the entire curbed area. Rainwater contamination also can be prevented by diverting the rainwater away from the loading rack by raising the loading rack slab and sloping the yard pavement down and away from the slab. The curbed areas in loading rack areas also should be evaluated. The loading rack area may be able to be decreased, thus minimizing the rainfall in the area.

To prevent the undesirable release of oil, consideration should be given to fail-safe design features. Among the features to be evaluated are an interlock warning light or physical barrier system to prevent vehicle departure before complete disconnect of the transfer line. Also, prior to movement of any tank truck or tank car, the lowermost drain and all outlets should be closely examined for leakage to prevent product spillage while in transit.

Any drippage and spills at the loading rack can be contained and/or collected with perimeter curbing, strip drains, or strategically located sumps. Systems can be installed directly in the loading area to collect any product spilled or released. The discharge from the containment area also can be routed to a retention or treatment facility. Where dedicated collection tanks are installed to receive only water and compatible hydrocarbons, the collected and separated product can be returned to storage for reuse. It is useful, however, to ensure that solvents and cleaners are not introduced into the system. Normal safeguards include regular gauging of the collection tank or automatic high level alarms. Also, the gravity flow should be designed to ensure complete drainage into the collection vessel to prevent the strip drains, traps, or sumps from retaining light oils that may create a fire hazard.

5.3.1.5 Product Pump-off and/or Truck Unloading

Because of the possibility of spills and drippage while disconnecting hoses, areas surrounding truck unloading connections are frequently curbed and the area is provided with an impervious surface. An alternative method is to install drip pans under the hose connection position. These pans can be drained directly to collection tanks to facilitate later pumping back to tank storage for reuse. To prevent water from mixing with the recovered product, covers are normally placed over the drip pans when they are not being used.

5.3.1.6 Tank Car Unloading

Stringent operating procedures will tend to reduce product release during tank car loading and unloading. For example, inspection of the drain block and all outlets before moving tank cars and positioning the tank cars so the fill and unloading facilities are over the spill collection facilities can reduce product release. In many tank car unloading facilities, it has been found that drip pans located under the hose connections can satisfactorily recover any spilled products. These drip pans can then be piped to central collection tanks for later recovery and return to storage. To prevent stormwater from entering the system, three-way valves can be designed to close the drainage line and/or divert stormwater away from the area when tank cars are not being unloaded. As with all spill collection tanks, routine gauging or high level alarms should be considered.

5.3.1.7 Empty Drum Storage

Most empty drums at marketing facilities have been returned by customers who have used the oils and lubricants formerly contained in the drums. Care should be taken to determine the regulatory status of the empty drums. It is essential that only empty drums be returned to the plant and that residue consist only of lubricating oils. Additionally, it is important that all drum openings be securely capped and that the drums be stacked with tops up. Consideration should be given to use of containment curbs and diversion of runoff from the empty drum rack area to an oil-water separator for treatment. Alternatively, use of canopies or other forms of cover to prevent stormwater from adding to the runoff can be beneficial.

Another strategy is to keep the returned drums to a minimum by selling them with the product or having the customer forward them directly to a reconditioner. Drums that have been used by customers for collection of wastes should be refused. In addition to returned oil drums, some containers at marketing facilities are obtained with purchased chemicals or additives. If the material purchased is hazardous by federal or state regulations, the residues must be handled as specified by those regulations. Purchases from suppliers who recycle their returned drums may be preferred over those from vendors who refuse to take back empty drums. Purchasing procedures that reduce the number of drums requiring disposal are generally preferable.

5.3.2 Truck Maintenance Bays

The truck repair bays at marketing plants and terminals generate some wastes that are usually not compatible with other plant effluent streams. In most cases, these wastes (solvents and absorbent used to remove oil and grease as well as various soaps and detergents) will form emulsions that will interfere with efficient oil and water separation. When discharges containing detergents, chemicals, acids or soluble oils may not be compatible with normal facility waste water treatment, wastes from the truck maintenance

bays may be isolated, treated, and disposed of separately. Where it is not feasible to treat these effluents separately, the waste should be recycled or contained and transported to a facility that can handle it acceptably. Specific wastes generated at truck maintenance bays are discussed in detail below along with suggested disposal practices.

5.3.2.1 Antifreeze (See also Section 5.5.5)

At marketing terminals and bulk plants, used antifreeze generated in the truck maintenance bays usually amounts to only the few gallons removed during servicing of the coolant system of the facility's truck fleet. Because antifreeze is water-soluble, it may not be compatible with normal plant gravity oil/water separation or some treatment facilities. Pure antifreeze has a relatively high BOD (biological oxygen demand) and may contain toxic additives that could violate receiving water standards if it is allowed to flow untreated from the plant. Ideally, used antifreeze should be collected in containers and taken to an antifreeze recycling facility, if such a facility is readily available in the area. Alternatively, the fleet's coolant systems can be serviced by an outside facility.

5.3.2.2 Solvents (See also Section 5.5.6)

Minor volumes of various solvents and chemicals are used at marketing facilities to clean equipment and in the maintenance garage during vehicle repairs.

During use, the solvents become contaminated with dissolved oils and greases and the road dirt that clings to the equipment being cleaned. Packaged units are available to purify dirty solvents via distillation.

Solvent recycling usually offers the most convenient and economical choice. A solvent tank and basin are provided by the recycler. On a regular basis, the recycler will bring in clean solvent and collect dirty solvent, which is returned to the recycler's central location where large-scale solvent distillation and cleaning will be conducted. Please note however that this may be a regulated activity.

5.3.2.3 Used Oil (See also Section 5.5.4)

For the normal marketing terminal, used oil is from the delivery truck fleet. Used oil is normally collected then removed by an outside service company who will re-refine or recycle the oil. It may be preferable to engage an outside company to handle the truck oil changes. As a convenience, many such firms will service the vehicles at the terminal and collect and remove all used oil.

5.3.2.4 Floor Cleaners (See also Section 5.4.2)

Preventing spills and drips is the first step toward keeping floors clean and minimizing waste generated as a result of cleaning the floors. When drips and spills do occur,

absorbent materials or pads should be employed to collect any grease or oil drippings. Oil drainings should be collected and disposed of through recycle service firms.

The largest volume of waste generated in cleaning floors is typically water. Absorbent used to clean up oil and grease will minimize the use of water. Floor degreasers and cleaners are generally not compatible with plant treatment facilities and should be avoided. Where floor cleaners are essential, water should be kept to a minimum, biodegradable cleaners should be employed, and the residue should be collected for acceptable disposal.

5.3.2.5 Truck Washing (See also Section 5.5.3)

Typical truck wash effluent contains elevated levels of oil and grease as well as suspended solids. At locations with automatic truck washers that consist of separate wash and rinse arches, the quantity of water needed for each truck ranges from 100 to 200 gallons.

Actually, the oil and grease level is not a true measure of the oil present in the effluent, because the EPA analytical method measures other organics present, such as the surfactant in the detergent, along with the oil. Because the contaminants in the cleaning water are emulsified by the detergent used, the normal treatment equipment at marketing terminals (oil/water gravity separators, carbon adsorption, etc.) has limited effectiveness for removing the soluble organics in this particular waste stream. It is therefore important to isolate truck wash water from the routine marketing plant effluent. If the untreated discharge cannot be routed to a sanitary sewer, the wash water can be contained and treated with inorganic coagulants (alum, lime, ferric chloride, and ferric sulfate) and/or polyelectrolytes to remove COD (Chemical Oxygen Demand) and suspended solids. Following chemical treatment (coagulation-flocculation), the solids residue is nontoxic and compatible with normal landfill waste so that the liquid may be discharged to a sanitary sewer.

Where isolation from other plant effluent and dedicated treatment is not feasible, alternative methods should be employed to reduce the quantity of waste. At locations with small truck fleets or where the alternate treatment procedures are not acceptable, consideration should be given to the use of outside truck wash facilities. Another option is to install a treatment system to permit reuse of all truck wash water.

5.3.2.6 Aluminum Brighteners

Unpainted truck trailers are periodically treated with an acidic brightener. This aluminum brightener is generally a corrosion-inhibiting acidic cleaner, and the treatment yields low-pH waste water. Where a terminal maintains a sizable fleet of aluminum trailers, provision should be made to discharge the waste from this treatment to the municipal sanitary sewer. Generally, however, for most plants with only a couple of truck trailers,

it is cost effective to send the trucks to an outside service company where this acidic brightener service is conducted on an ongoing basis and treatment of the waste stream is appropriately handled.

5.3.3 Tank Basins

In most cases, tank basin levees are constructed of well-compacted earth, reinforced concrete, or waterproofed reinforced concrete block. In areas of porous soil, an inverted dike should be extended either to the lowest recorded water table elevation or to an impervious soil stratum. Alternatively, an impervious barrier should be installed on the surface of the tank basin. The diked area should be designed with a capacity to contain the contents of the largest tank, plus sufficient freeboard to hold any stormwater within its limits.

Because the tank basin is strictly a fail-safe feature designed to prevent large spills from being released, there should be no oil or grease present during normal operations at a well-maintained facility. During equipment maintenance procedures, spills or contaminant releases within the tank basin should be absorbed and removed immediately. All surface stormwater can be gravity routed to a low area within the tank basin where there is a drainage system to release the uncontaminated water. Typical designs will include a sump connected to a pipe drain through the dike with a block valve and a provision for locking. Alternatively, many bulk plants utilize swing-jointed stand pipes which are lowered after a storm and raised immediately following drainage of the dike area.

Stormwater discharges must be handled in accordance with the appropriate permits issued under the regulations for stormwater discharges. To minimize contamination of stormwater, the following are several safeguards that can be employed:

- The dike drain valve is locked closed at all times when not being used.
- Prior to release of stormwater, an inspection is made to ensure compliance with applicable water quality standards.
- Adequate records are maintained for each draining of the tank basin.

In the following sections, some of the specific operations within the tank basin are discussed in detail.

5.3.3.1 Tank Water Draining

Preventing water from getting into the tanks is a means of minimizing tank water draws. Tank water bottoms contain not only oil but also alcohols, naphthenic acids, phenols, and

numerous other chemical additives. The discharge is high in COD, BOD, solids, and other compounds and, if released untreated into the tank basin, could contaminate groundwater or a large quantity of stormwater. In order to reduce the volume of water that has to be removed from the tank, the following actions can be taken:

- Water in the product may be minimized as follows:
  - Closely monitor all pipeline receipts to ensure that water is not included with the product tender.
  - Check all barges and tankers for water prior to receipt.
  - Monitor truck and tank cars for water in product being received.
- The entry of stormwater into storage tanks may be minimized through one of the following measures:
  - Construct covered floating roof tanks.
  - Equip open floating roof tanks to prevent water from entering the product (usually by use of internal drains and well-maintained roof pan seals).
  - Retrofit open floating roof tanks with geodesic domes.

After minimizing the amount of water entering the tanks, the remainder which may have to be drained should be treated and disposed of in accordance with appropriate regulations and permits.

5.3.3.2 Sample House

At terminals where product samples must be taken during receipt, equipment should be designed to prevent drippage or spillage. Frequently, sample testing is implemented by extending fixed piping from the line taps into a sample house where tests can be made and unneeded product can be returned to a collection vessel or tank. All sample product that does not have to be retained for quality assurance should be returned to storage.

5.3.3.3 Additive Injection Facilities

Some additives can pose unique environmental concerns because of their water solubility and/or toxicity. Injection systems should be designed to prevent contaminants from being released within the tank basin. Features used to prevent spillage include a fixed piping system from the additive supply directly to the receiving tank or to the tank's product

supply line. Where feasible, storage tanks supplied by tank trucks or tank cars are preferable to drum receipts. Locations where spillage may occur, such as the truck delivery connection and drum handling areas, should have containment and collection equipment. Normally, it is preferable to return any contaminated additives to the supplier.

5.3.3.4 Tank Cleaning

Before cleaning storage tanks, every reasonable effort should be made to extract all recoverable product and return it to storage. During the cleaning process, the residue remaining after all recoverable refined product has been removed consists of a liquid phase and a solid phase. The liquid is primarily water with a small amount of hydrocarbons that readily float on top of the solids. The oil content of these sludges is generally low (1 or 2%) for sludges removed from light product tankage such as gasoline. Sludges cleaned out of tanks holding viscous or heavier products, such as fuel oils or greases will contain higher oil content (5 to 50%) because a larger amount adheres to the tank walls. Also, these heavier products contain constituents such as waxes and asphalts that tend to form sludges.

Initial efficient recovery of hydrocarbons is necessary to minimize the amount contained in the liquid phase. This liquid phase can then be treated and disposed of in accordance with appropriate regulations.

The solid phase or sludge is a mixture of insoluble deposits wetted with water and hydrocarbons. These sludges are removed from tankage whenever the tank is taken out of service for repairs or modification. Additionally, there are periodic tank cleanings necessary because of the accumulation of bottom deposits. Small quantities of solids in refined products accumulate as sludge in these tanks, but they can normally operate for periods in excess of ten years without need of cleaning.

In addition to minimizing the quantity of waste by employing every reasonable effort to remove as much hydrocarbon as possible, the procedures listed below should be followed:

- Reduce or avoid slurries by minimizing the water used to clean tanks. (Use only enough wash water to remove the bottom sludge.)
- Recycle the cleaning water; it can be routed to gravity separators for removal of hydrocarbons and solids and subsequent reuse.
- Upon removal of solids, extract all liquids (filter presses can be effective). The water removed can then be treated and disposed of in accordance with appropriate regulations.

Many service companies clean tanks and remove sludge. Some companies offer an assortment of portable sludge minimization services that recover oil for recycling and produce a low-volume solid waste for disposal. Typical equipment will include centrifuges and plate and frame filters. (For details on design and capability refer to Section 4.1.4 and 4.1.5.)

The toxicity of the sludges varies depending on the service for which the tank is used. All storage tanks that have been used for leaded petroleum products will contain residual lead of varying concentrations. During the cleaning of leaded gasoline storage tanks, the residue remaining after all removable liquids have been extracted includes insoluble lead oxide deposits in conjunction with normal rust and scale. All tank sludge, when recovered, should be evaluated for hazardous waste toxicity characteristics.

5.3.4 Alcohols

Because of the dramatic increase in alcohols added to gasoline, both as an extender and octane improver, there is increasing likelihood of alcohols getting into plant wastewater. It is important that alcohol storage tanks, unloading positions, and pumping units be segregated from petroleum handling facilities where feasible.

To minimize the quantity of waste generated, storm and plant waters should not be mixed with wastes containing alcohols. Where alcohol does get into isolated wastewaters, such as in gasoline tank water drainings, separate treatment may be required. Small quantities should be acceptable for normal biological treatment and disposal in accordance with appropriate regulations.

Generally, the optimum procedure for handling alcohols is to keep alcohol-containing wastewaters to a minimum, isolate these streams, remove free hydrocarbons utilizing gravity treatment, and dispose of the remaining biodegradable waste appropriately.

5.3.5 Marine Docks

Waterfront facilities used for the transfer of products to and from marketing terminals generate minimal wastes during normal operation. Any pollutants which do escape, however, pose a direct threat to the receiving waters below. In the following sections, the main sources of marine dock wastes and procedures for their minimization are addressed.

5.3.5.1 Dock Product Transfer Areas

To minimize the quantity of wastewaters generated, most terminals utilize drains under all hose connection positions. These drains, used to contain drippage and drainings when hoses are disconnected, can be routed to collection tanks where they are later reinjected back to storage. To facilitate the reuse of this material, separate collection tanks may be used for compatible families of products. Covers, valving, or some other

means should be provided to prevent stormwater from entering the collection system when product transfers are not being conducted.

These collection systems also provide receptacles for any other waste oils, including product samples that are generated on the docks. Also, consideration should be given to hydrostatic testing of hoses with oils that can later be returned to storage through the collection tanks. To prevent generation of contaminated waste, water should not be used for hydrostatic line and/or hose testing.

By isolating all petroleum wastes, the dock surface remains free of any contaminants. Normally, the dock, surfaced with concrete or other impervious material, is curbed to contain any accidental spill during product transfer. Therefore, if a spill occurs, the collected product can be routed back to storage through the hose drippage collection system. After normal product transfers, it should be acceptable to remove scuppers in the dock curbing to permit discharge of clean stormwater directly to the waterway.

5.3.5.2 Sanitary Waste

At dock areas, an evaluation should be made as to whether it is necessary to provide sanitary facilities. All tankers, tugs, and barges are equipped with adequate facilities, including necessary collection tanks and/or waste disposal systems. If it is necessary to provide sanitary facilities on the land side dock, it is usually best to have the waste piped directly to the plant sanitary sewer. Alternatively, either a package treatment facility or an adequately sized holding tank should be provided to enable later disposal to sanitary treatment facilities.

5.3.5.3 Ballast Water

Relatively few marketing facilities need to accept ballast water prior to loading vessels. This waste stream characteristically has a high salt content, solids, and free oil. Many times the only practical method of handling ballast water at marketing facilities is through use of a dedicated treatment system, which normally consists of a gravity separator and containment system (frequently a covered storage tank).

Recovered oil can normally be recycled to the plant's heavy oil storage and the water held for later disposal. Reuse may be achieved by return to the next vessel that off-loads to the terminal; it can be used by the vessel's ballast on its return trip.

5.3.5.4 Package Storage

To minimize the buildup of contaminated solid waste, packages should be stored on an impervious floor with an overhead cover to prevent stormwater intrusion. When spills or leaks occur, the waste should be cleaned up with absorbent material and managed appropriately.

Floor washing can be carried out by use of automatic scrubbing machines capable of capturing all wash waters, which can later be disposed of through the truck wash system.

5.4 Complex Marketing Terminals

Facilities included under this category include large terminals that handle petroleum products ranging from gasoline to heavy oils, major airport fueling facilities, and locations where complex activities, such as lube oil blending or grease compounding, are conducted.

For oil removal, gravity separation is a common method; oil and water separate upon standing because of the difference in their specific gravities. The separation can take place in a tank or a specially designed separator. By controlling the waste streams and isolating contaminants incompatible with gravity separation, a plant can realize the following advantages:

- By operating on gravity flow, a plant is not subject to malfunction by power failure or breakdown of pumping and other mechanical equipment.
- A gravity separation unit can operate effectively unattended for reasonably long periods of time, such as overnight or weekends.
- A gravity separation unit is capable of operating under most winter conditions and with widely varying flows. This advantage can be particularly significant for terminals with flows varying from "0" during dry weather to several thousand gpm following heavy rainfall.
- A gravity separation unit does not require highly skilled operators or sophisticated maintenance.

It should be noted that in some cases, however, wastewater discharges may require additional treatment to meet discharge permit requirements. Additionally, if a facility is managing TC hazardous waste waters, additional requirements may apply.

More sophisticated methods of removing oil are generally not suitable for use at marketing facilities, but some of the alternatives to gravity separation described below may be applicable at certain locations:

Coalescers:

Coalescers use a medium to capture small globules of oil on the filter surface, enabling them to come in contact with each other and form larger oil globules. The effective increase in oil globule size makes the oil easier to separate.

Generally, the small oil content in terminal waste streams and the solid material draining off yard areas (road dirt, silt, and sand) causes early plugging, making the coalescers system inoperable.

Filtration:

In filtration systems, oil and solids are effectively removed by physical entrapment on the filter medium. In the case of an oil spill, however, filter materials quickly become saturated with oil, and if they are not regenerated, the resulting oily solid-waste disposal problem becomes unmanageable. Some granular media systems can be regenerated by backwashing followed by recovery of oil and solids.

The main disadvantage with filtration systems at marketing facilities results from the extreme variation in flow. During dry weather flow, the system is not operated and storm surges can unload captured oil if the filter has not been cleaned before the rain. Because of this problem, large holding basins are required, and the filtration system provides limited benefit, if any.

Air Flotation:

In this process, small air bubbles are introduced which adhere to suspended oil particles and accelerate their rate of rise. Air flotation systems are not normally suitable for terminal use because they cannot readily handle the widely varying flow rates (zero to several hundred gpm) that are encountered. Air flotation also requires significant operator, maintenance, and monitoring attention which is normally not available at marketing facilities. For effective oil removal, chemical additives are generally required with air flotation, which requires technically trained manpower and entails additional operating costs.

Coagulation-sedimentation:

In this process, a chemical is added to the water to form an insoluble flocculent (floc) to which the oil particles adhere. This floc then settles to the bottom of a settling tank. Because large quantities of chemicals must be added to cause the oil to sink rather than float, this procedure is not practical for oil removal at marketing facilities. Disposal of the floc presents additional problems.

Centrifugation:

This process utilizes centrifugal force in place of gravity to separate substances with different densities. For oil-water separation, centrifuges are useful only for small, high-strength waste streams such as laboratory wash waters. Centrifugation is not practical at complex terminals because of the high stormwater flows and the significant maintenance problems that would be expected.

Successful waste minimization practices at complex marketing facilities require good housekeeping, isolation of operations, segregation of noncompatible wastes, consolidation of similar waste streams, and reclamation of oil primarily by oil/water separation. Specific areas where waste minimization should be employed are discussed below.

5.4.1 Boiler Blowdown

At marketing terminals, boilers are used for heating heavy oil, lubricant lines, and storage vessels. To minimize waste, systems should be closed with steam condensate recycled back to the boiler. It is frequently necessary, however, to release a small amount of boiler water (.05 to 2 gpm) as continuous blowdown in addition to the sludge blown out of the bottom of the boiler several times each day.

Boiler blowdown waters have a high pH, moderate amount of organics from the treatment chemicals, and high dissolved inorganic solids. Because of these contaminants, boiler blowdown effluent tends to emulsify any oil present in an oil-water separator and may result in discharges high in oil content.

To reduce waste, steam condensate should be collected and recycled back to the boilers. For the balance of the waste stream, if maximum specifications are set for suspended solids or oxygen demand, another treatment besides simple gravity separation would be required. In such cases, the remaining waste should be managed appropriately.

5.4.2 Floor Cleaning

Floors in grease and lubricant manufacturing buildings, maintenance garages, and package warehouses must be cleaned periodically to prevent buildup of oils and greases. Intervals between cleaning can be extended through good housekeeping and a maintenance program that minimizes leaks and drips from the manufacturing and packaging operations. Any drippage that cannot be recovered and recycled should be removed immediately with absorbent and disposed of as solid waste.

Automatic floor scrubbers are normally the best tools for periodic cleaning. They can be programmed to dispense a minimum quantity of detergent-water solution, scrub the floor surface, and then vacuum the liquid back into a holding tank on the machine.

Wastes collected on floor scrubbers is low in volume but high (100-300 ppm) in total organic carbon (TOC), owing to detergent, high levels of oil and grease, and varying amounts of suspended solids, depending on the condition of the floor. The dirty wash water is best routed to the truck wash water containment tank for treatment and/or disposal in accordance with appropriate regulations.

5.4.3 Used Oil

Spent lubricant and hydraulic fluid wastes are generated from the routine expiration of the usable life of these fluids in machinery, vehicles, and aircraft. In most cases, spent lubricants and hydraulic fluids undergo relatively small changes in their basic composition during usage. Expiration of useful life is largely based on depletion or breakdown of additives, oxidation of hydrocarbons to acidic compounds, and accumulation of metals from wear or from fuel additives. Unlike contaminated fuels, spent lubricants and hydraulic fluids have a predictable rate of production.

All used oils should be collected and recycled or rerefined. Other disposition may subject used oil to hazardous waste regulations. Please note that the regulation of used oil is rapidly changing. Federal, state and local laws and regulations should be consulted.

When recycling or rerefining is not an option, combustion may be an alternative. Despite the presence of lead and other waste metals, spent lubricants may be amenable to direct disposal by combustion. Crankcase lubricants have been burned with residual fuel in boilers at many locations in compliance with EPA regulations.

5.4.4 Loading Rack Slab Washing

Periodic cleaning of loading rack pads using a detergent usually requires significant volumes of water. Because loading rack pads are not necessarily washed down on a regular basis, but only as needed, the best method for reducing this waste stream is to eliminate spills and collect drippage in portable containers rather than have it fall on the slab.

At loading rack slabs for lube oil and heavy refined product, more frequent detergent cleaning is necessary, and the resultant wastewater is contaminated with oil and detergent. Because detergent in the wash water tends to emulsify oil in the water, the wash water may be isolated from the loading rack interceptor tank by valving or other means to block off the rack drainage sumps during cleaning operations.

The volume of detergent, oil, and sludge is increased sizably by water used for flushing the surface and for moving the material out to a portable tank for subsequent treatment. This volume increase may justify the use of a service contractor to reduce the volume by centrifugation or filtration. Alternatively, at large manufacturing plants, it may be cost-effective to install a site treatment facility for the various high-strength wastes isolated and collected during washing of loading racks.

5.4.5 Sludges from Separator and Sumps

Typical marketing facilities have smaller oil-water separator systems than refineries and usually do not continuously remove and process separator sludges. Instead, these

separators are shut down on a scheduled basis to remove sludges, which are comprised of oil (5 to 25%), solids (20 to 30%), and water (20 to 80%). The type of oil will be dependent on the various products handled at the facility and the extent of unmanaged drips to the sewer system. The solids in the separator generally come from the soil washed into the system. Solids can also be generated and deposited in the separator via wash down of occasional spills and from chemical interactions that cause precipitates to form in the drainage system. The water content of these sludges is increased when water hoses are used to slurry the sludges for removal by vacuum truck.

To minimize this residual, a service company is often used to recover oil and remove the water from the sludge. The same type of service company as is used for tank bottoms can be employed to centrifuge or filter the sludge to reduce its volume. Recovered oil is sent to be recycled, and the water removed is returned to the oil/water separator or discharged in accordance with appropriate regulations. Separator cleaning may be scheduled to coincide with tank cleaning to reduce treatment costs.

5.4.6 Slop Oil and Commingled Product

To accomplish effective waste minimization together with cost benefit maximization, an overall evaluation should be made of a facility's waste streams to determine which petroleum products should be segregated for effective recovery and/or disposal.

Some refined products, such as jet fuel, are highly susceptible to contamination by water, grit, and -- to a lesser extent -- bacterial growth.

In practically all cases, commingled product or slop oil can be blended back into refined storage tanks. Normally these oils are collected in segregated storage until they are blended back into heavy oil (#6), heating oil (#2), or motor gasoline in quantities usually less than ½ of 1%. Sources of slop oil include oil separators, laboratory and product sample wastes, drip pans, spill containment, and line purging and testing.

5.4.7 Lube and Grease Manufacturing

Some marketing terminals operate lube oil or grease blending and packaging facilities. These operations can be either batch or continuous systems, which are usually operated to achieve a designated volume of product to meet market demand. Whenever the blending schedule requires a change in product, the system is flushed with rinse oil and sometimes washed with water and detergents. This process produces waste oils, grease, and wastewater.

To minimize these wastes, the schedule of operations may be reviewed to determine if the residual oil in the system is compatible with the next scheduled product. In some cases, the next scheduled product can be made without rinsing or washing the system.

Another way to minimize waste generated between blends is to produce more of a given product during the operating run and then store it for a longer time, thereby reducing the amount of rinse and waste. Issues to evaluate in order to increase the volume produced during a given cycle include:

- Available product storage tankage
- Customer discounts for high volume
- Schedule of arriving blend stocks
- Operating shift schedules
- Cost and amount of waste materials

Long-term plans may be made for improving operations to maximize the usable product by:

- Modifying pipelines and process units to facilitate segregation (e.g., fill "families" of products in dedicated areas).

- Reducing off-specification blends through the use of modified methods and new technology (e.g., computer controls).

- Reformulating finished product to allow reworking of off-specification "premium" materials.

- Reducing toxic constituents by substituting less toxic base stocks or additives.

5.4.8 Solvents (See also Sections 5.3.2.2 and 5.5.6)

At major facilities where substantial volumes of solvents may be used, it is normally advantageous to separate out the halogenated hydrocarbon solvents. Trichloroethylene and perchloroethylene can be recovered from slop oils (after degreasing operations) by simple distillation solvent recovery stills. When practical, these solvents may be sent back to the manufacturers. Please note that the recycling of solvents may be a regulated activity.

At most marketing facilities, the volumes of chlorinated hydrocarbon solvents are normally too low to consider on-site reclamation facilities. With dedicated collection facilities, quantities acceptable to a reclamation contractor can be accumulated. Alternatively, incineration is the most viable option.

5.4.9 Sampling and Laboratory Wastes

All product samples tested in the laboratory should be collected and returned to storage. To recover sample oil effectively, it is necessary that samples be segregated (e.g., high

flash point from low) for reuse on-site in finished product. At the same time, spent reagent hazardous wastes should be segregated so they can be disposed of properly.

In addition, "quality" determinations on off-specification material should be performed in the laboratory to optimize opportunities for reuse.

5.5 Retail Facilities (Service Stations, Fast Lubes, C-Stores and Truck Stops)

While the volume of wastes at individual service stations, repair garages, C-stores, and truck stops may not be as great as that of wastes at other marketing sources, a given outlet's volume of waste can be significant, and the large total number of outlets makes these facilities prime candidates for benefitting from some of the following waste minimization practices:

- Practicing good housekeeping (e.g., avoiding spillage and completely draining all liquid containers).
- Segregating wastes.
- Recycling and reclaiming wastes.

Wastes associated with the retail category include the following:

- Used crankcase oil and other lubricants as well as transmission, brake, and steering fluids. (These may be recycled and reclaimed.)
- Parts-cleaning solvents. (These hazardous wastes require special handling.)
- Solid parts that are removed such as filters, batteries, and tires and other solids such as oily rags and dry absorbent materials.
- Spent antifreeze. (See 5.3.2.1.)
- Water from the bottom of product tanks.

Waste segregation is an important strategy for retail facilities. For example, hazardous waste can be minimized by preventing solvents (e.g., chlorinated hydrocarbons) from mixing with waste oils. Careful segregation helps preserve the value of recycled and reclaimed materials.

The following sections address specific areas where effective waste minimization practices can be utilized at retail facilities.

5.5.1 Underground Leaks and Product Spills

A major source of waste is underground leaks at retail stations. Wastes generated by such leaks include not only the product released but also the ground it contaminates and the waters (surface and subsurface) it pollutes.

The primary cause of these leaks in tanks and pipelines is corrosion. At new installations, underground leaks can generally be controlled by designing the system with noncorrosive materials and/or cathodic protection, and installing various leak detection devices. At existing locations, a combination of retrofit devices can be installed including cathodic protection, line leak detectors, and replacement of potential leak components of the system. Certain underground tank and product line upgrading and leak detection/spill prevention may be specifically required by federal and local regulations.

Elements in minimizing leaks from underground installations may include the following:

- Inventory record keeping is the key to early leak detection. Each location must establish accurate inventory record keeping.
- Wherever experience indicates corrosion, all underground facilities should be replaced with noncorrosive or cathodically protected materials.
- Where cathodic protection is utilized, controls must be established to assure continued maintenance of the system.
- A thorough investigation of any suspected tank or line leaks should be conducted. The cause of the leak should be determined and action to prevent any further loss should be taken.
- Tank leak testing should be conducted as necessary.
- Immediate action should be taken to prevent migration of the product whenever a leak occurs.

To minimize leak and spill-generated wastes, retail operators must be thoroughly knowledgeable of signs that indicate when product is being lost. Leaks can be detected promptly if adequate inventory records are maintained. Also, obvious signs of leakage and spills such as gasoline-soaked soils around dispensers, submersible pumps, and fill manholes should be investigated immediately.

Spills and leaks under the dispensers can be minimized by frequent inspections, containment manholes, avoiding spillage during filter cartridge changes, and keeping all pipe connections tight.

5.5.2 Underground Tank Water Bottoms

Any water that accumulates in storage tanks must be removed as often as necessary to keep its level sufficiently low so that it will not be drawn into the suction stub and to reduce water contact with alcohol components in gasoline. As a result of the contact with gasoline, the water contains gasoline additives and alcohols and it often has a chemical oxygen demand (COD) in excess of 15,000 ppm. Because of this direct contact with gasoline, the water may be hazardous under the toxicity characteristics rule and should be handled accordingly.

To prevent water from accumulating in underground tanks, the following safeguards may be considered:

- Whenever possible, check the delivery truck for water before accepting any product.
- Grade the yard area down and away from the manholes to prevent water from pooling in the area.
- Install the manhole and gauge hatches above the surrounding grade.
- Maintain and replace worn or missing gaskets or manhole covers and fill-pipe fittings.
- Ensure that caps are tightly replaced after gauging and product deliveries.

5.5.3 Car Wash (See also Section 5.3.2.5)

Car washes in combination with retail outlets, especially gas and go and/or C-Stores, are common and represent almost a standard facility design for much of the industry.

Detergents and chemical additives used in car washes may present treatment problems. Because these chemicals form emulsions with oil and grease washed off vehicles, they are not acceptable for discharge to the environment and may require treatment before being accepted by municipal sewer systems.

Resolving problems about where and how to discharge chemical emulsions is an important area of waste minimization. Use of a "closed system," where wash water is recycled and only "rinse water" and "make up water" are newly added completely eliminates any discharge to the environment or sanitary sewers.

Aeration and chlorination of the holding tank may be necessary to prevent an anaerobic condition from developing in the collection tank.

Accumulated sludge (i.e., sand and dirt that settle out in the holding tank) will have to be removed occasionally and disposed of by an authorized contractor in an acceptable manner.

5.5.4 Used Oil (See also Section 5.3.2.3)

Used oil is generated primarily at full-service stations, fast lubes, and truck stops. It is critically important that all used oil be segregated and that no other chemicals or solvent materials be added to it.

Federal, state and local regulations must be followed in disposing of used oil. Used oil can sometimes be picked up by a local reclaimer or recycler. Depending on geographic location, the availability and cost of reclamation services will vary.

5.5.5 Antifreeze (See also Section 5.4.2.1)

Waste or used antifreeze would normally be generated only at full-service stations, fast lubes, repair garages, and truck stops. As indicated in Section 5.3.2.1, antifreeze has a relatively high BOD and frequently contains toxic additives that could violate receiving water standards if the antifreeze is allowed to drain to a stream or storm sewer. Discharging antifreeze to an on-site sewage treatment facility could have detrimental effects on the system's efficiency and perhaps cause problems with its operation. In general, it is recommended that waste antifreeze be segregated in a separate tank and transferred to an antifreeze recycling facility, if one is available, or to an appropriate treatment facility. Please note that recycling of antifreeze may be a regulated activity.

5.5.6 Solvents (See also Sections 5.3.2.2 and 5.4.8)

Solvents are used primarily in parts and equipment cleaning and degreasing during maintenance and engine repair at full-service stations, repair garages, and truck stops. The limited amounts required would normally not support the cost of a package unit for recycling dirty solvents at the facility.

Spent solvents should not be added to waste oil or antifreeze. The most desirable option for their disposal is regular use of a solvent recycling company that picks up dirty solvent and leaves clean solvent for the facility. Please note that the recycling of used solvents may be a regulated activity.

5.5.7 Tires

Where tires are sold and/or installed, used tires become a solid waste that is somewhat difficult to dispose of and is usually unacceptable in ordinary trash. Tires should be segregated from all other trash and stored neatly to minimize space required. Service agencies are usually available for a fee to pick up tires for disposal. Care should be exercised to see that a service agency is properly and legally disposing of the waste tires.

Various industries use waste tires in many different ways, usually after some type of processing. For example, tires can be used in the construction of fill retaining walls or artificial saltwater reefs. Companies that use waste tires may provide pick-up service free of charge or perhaps even buy the waste tires.

5.5.8 Batteries

Used batteries are difficult to handle. They must be carefully segregated from other trash, and neatly stored in stacks, top side up, to minimize space requirements and to avoid spilling acid from inside the battery onto surrounding surfaces.

Batteries cannot be sent to landfills; rather, they must be collected by reclaimers. Collection is usually not a problem, but depending on a facility's geographic location, the frequency of pickup affects the stored volume, prices paid for used batteries and fees charged for pickup vary greatly. Much of the material in used batteries constitutes a recyclable resource. Please note that the recycling of used batteries may be a regulated activity.

5.5.9 Oily Solid Waste (Filters, Sumps, Rags, Empty Containers and Absorbent)

Other generally oily solid wastes, such as filter cartridges, rags, empty oil containers, solids removed from service bay sump and other oily absorbent material should be kept segregated. Oily solid wastes can be minimized by careful segregation and can then be disposed of in accordance with appropriate regulations.

Metal and/or engine parts, when kept segregated, can be sold to a metal salvage dealer. Sometimes it is also possible to sell used oil filters to metal salvage dealers. Using an oil filter compactor to crush the filters often makes this easier to accomplish. In addition, sometimes oily rags can be sent to an industrial cleaner as a means of recycling.

Any normal rubbish accumulation, such as paper, bottles, and cans may be sent with garbage to most sanitary landfills.

Marketing Waste Minimization Practices
Case Study 5-1: Asphalt Waste Recycling

Introduction

A large West Coast asphalt producer generates about 100 barrels per year of hazardous asphalt waste. Sources of this waste are predominantly:

- Laboratory samples
- Pump seal leaks
- Valve packing leaks
- Flange leaks

Asphalt waste is typically put into sealed drums and stored on-site until transportation by a licensed hazardous waste hauler is arranged, and an appointment is made with a Class 1 dump.

Description of Waste Minimization Practice

Waste asphalt is regularly collected from around the refinery and laboratory. A heating kettle is located near a source of 120 psi steam and close to the main asphalt feedline. (See figure C-5-1.)

The asphalt waste is liquefied in the kettle in 60-gallon batches. It is passed through three progressively finer mesh strainers and then routed to the main asphalt feedline.

The refinery produces both anionic and cationic asphalt. Waste asphalt is always a mixture of the two asphalts. Because cationic and anionic asphalt have different specifications, it is important to limit the amount of waste added so that product quality is not affected. Limiting waste asphalt to less than 1% of the final product precludes any noticeable product quality degradation.

Effectiveness

Recycling of waste asphalt completely eliminates the costs associated with the transporting, manifesting, disposing, record keeping, and reporting of a hazardous waste. No detrimental effects of this practice have been reported by the refiner.

The recycling of approximately 100 barrels per year of waste asphalt produces savings of over $220 per barrel, or over $22,000 per year.

Costs

Capital costs are minor (less than $10,000). Operating costs include steam heating costs, operator man-hours, waste collection costs, and maintenance costs.

SOLID WASTE
ASPHALT
120 LB STEAM
ASPHALT WASTE
RECYCLING
RECYCLED LIQUID ASPHALT
TO MAIN FEED LINE

Marketing Waste Minimization Practices
Case Study 5-2: Recycling of Soap Dust Waste

Introduction

An emulsion asphalt manufacturer uses three kinds of soaps as feedstock -- one in liquid form and the other two in a powdered form. The soap is used as an emulsifier to help suspend the asphalt in the water. Either of two soap feedstocks is typically produced, depending upon product specifications. An acidic feedstock is made by mixing the soap with water and a low-pH component. A caustic feedstock is manufactured by combining the soap, water, and a basic (high-pH) material. The resultant soap mixture is then heated and mixed using pressurized steam.

A common baghouse is used to collect the uncontrolled fugitive emissions of caustic or acidic soap particulate matter. Approximately 7 Bbls per year of hazardous soap dust waste, consisting of 98% solids and 2% water, is collected in the baghouse. This material is considered a hazardous waste because of its corrosivity, owing to either low or high pH.

Description of Waste Minimization Practice

Use of a common baghouse eliminates the possibility of recycling the soap dust because the two dissimilar soap dusts are combined and other particulate matter is introduced. The waste minimization practice is based on recycling the hazardous soap dust back to the soap mixing tank.

To implement the recycling procedure, half-horsepower air blowers with bag filters are installed above each covered soap solution mixing tank. Before adding powdered soap, the blower is activated. Negative pressure draws the fugitive dust particles into the bag filters. After each soap feedstock is prepared and the mixing tank is emptied, the recovered soap dust particles are shaken from the bag filters. Segregating each soap type with its respective mixing tank allows the soap to be reused.

Effectiveness

Elimination of a common baghouse precludes costs associated with transporting, manifesting, disposing, record keeping, and reporting of a hazardous waste. Maintaining segregation of the two powdered soap waste types allows their reuse and reduces raw materials costs.

Costs

Costs of the soap dust recycling system include two half-horsepower blowers, two bag filters, electricity, and employee time.

Bibliography

American Petroleum Institute. May 1988. Evaluation of Treatment Technologies for Listed Petroleum Refinery Wastes. (Publication No. 4465).

Atkins, W. and Thomas P.E. (Mittelhauser Corporation). January 1989. Management of Spent Refinery Catalysts. Western Oil and Gas Association, Laguna Hills, California.

Chemical Manufacturers Association. November, 1987. Waste Minimization Workshop, Volumes I-II, New Orleans, Louisiana.

Electric Power Research Institute. April 1986. Selective Catalytic Reduction for Coal-Fired Power Plants-Pilot, Final Report.

Electric Power Research Institute. October 1984. Selective Catalytic Reduction for Coal-Fired Power Plants: Feasibility and Economics, Final Report.

Environmental Planning and Management Committee, Canadian Petroleum Association. January 1984. Waste Disposal Guidelines for the Petroleum Industry.

Haverhoek, S., Management of Hazardous Wastes in the Oil Refinery Industry. Shell International Petroleum Health, Safety and Environment Division, Maatschappij, The Netherlands.

Hollod, G. J. and McCartney, R. F. (E. I. du Pont de Nemours & Co., Inc.). 1988. "Hazardous Waste Minimization: Part I, Waste Reduction in the Chemical Industry, Du Pont's Approach." APCA.

Hunt, Gary E., North Carolina Pollution Prevention Pays Program, Department. of Natural Resources and Community Development. 1988. "Hazardous Waste Minimization: Part IV, Waste Reduction in the Metal Finishing Industry." APCA.

Kaminski, Joseph A., "Hazardous Waste Minimization: Part VII (B), Hazardous Waste Minimization within the Department of Defense." Office of the Deputy Assistant Secretary of Defense (Environment).

Oman, Daniel E. (RMT, Inc.). 1988. "Hazardous Waste Minimization: Part VI, Waste Minimization in the Foundry Industry." APCA.

Petroleum Association for Conservation of the Canadian Environment. November 1986. Waste Management Guidelines for Petroleum Refineries and Upgraders. (Report No. 86-2). Ottawa, Ontario.

"Reducing RCRA Impact Through Waste Minimization." Workshop Sponsored by the American Petroleum Institute and National Petroleum Refiners Association, Arlington, Virgina, May 1987.

Tower Conference Management Company. 1987. Proceedings of The Third Annual Hazardous Materials Management Conference/West.

U.S. Department of Commerce. 1986. Report to Congress: Minimization of Hazardous Waste. Volume I and Appendices.

U.S. Department of Commerce. 1986. Waste Minimization Issues and Options. Volumes I-III.

U.S. Department of Commerce. 1987. Report to Congress: Management of Wastes from the Exploration, Development, and Production of Crude Oil, Natural Gas, and Geothermal Energy. Volumes 1-3. (NTIS).

APPENDIX A

QUESTIONNAIRE AND INSTRUCTIONS

AMERICAN PETROLEUM INSTITUTE
WASTE MINIMIZATION PRACTICES

INSTRUCTIONS FOR COMPLETING FACILITY QUESTIONNAIRE

The enclosed questionnaire has been developed to obtain information on successful waste minimization practices used in the oil industry. Information from the responses will be used to prepare descriptions of these practices for the Compendium of Waste Minimization Practices. Confidential or proprietary information should not be included in the response.

Upon receipt of each response, Mittelhauser Corporation will assign a facility code, which will be used to reference the response. Facilities will not be identified in the Compendium by company name or location, only by code. The actual facility identities may only be obtained by submitting a written request to API.

The objective of this questionnaire is to obtain information on successful procedures that minimize the quantity and/or toxicity of residuals/wastes from oil industry operations. Responses are requested for hazardous as well as nonhazardous residuals/wastes, including those from production and marketing, refinery catalysts, and spent chemicals that are not currently hazardous under RCRA. Some of these residuals/wastes could be considered hazardous under state regulations.

Information is requested on successful minimization practices in to the following categories:

- o Source reduction
- o Recycling
  - Unit
  - Facility
  - Off-site
- o Treatment

Source reduction includes practices that reduce the quantity or toxicity of the waste at the source. An example of source reduction is the decreased use of sand blasting that results in solids being swept or flushed into a wastewater system. A second example would be using a street sweeper to remove dry solids that would otherwise be released into the facility wastewater system. API is particularly interested in obtaining information on successful source reduction practices.

Recycling is based on the API definition and includes

(1) the recovery of a complete residual/waste to be fed

to a process unit or facility replacing part of its normal feedstock, and

(2) the recovery of a valuable component from a residual or waste and returning this component to a process unit or facility replacing part of its normal feedstock (reclamation).

Recycling encompasses unit, facility, and off-site recycling. Unit recycling includes a minimization practice that recovers a residual/waste or a valuable constituent from the residual/waste at the unit where it is generated and returns the recovered material as a feed to that unit. An example is recovery of a waste oil at a production site that is fed into the crude processing train.

Facility recycling may include the recovery of a waste oil from any refinery process unit and returning that oil to crude charge or injecting sludges into a coker. Another example would be returning recovered oil from an oily sludge filtration unit to crude charge.

Off-site recycling includes transporting a residual/waste to another facility to be used as a feedstock. Examples of this type of activity would be shipping a catalyst to a reclaimer for recovery of valuable metals or shipment of a spent caustic to a pulp and paper facility for use as a raw material.

Treatment includes practices that do not result in source reduction or in recovery of a useful, recyclable constituent. Examples of treatment practices are incineration and land treatment.

The questionnaire contains three separate sections and one figure. The sections request information on (1) the facility that generates the residual/waste, (2) the residual/waste of interest, and (3) the minimization practice. Figure 1 is used to help define influent, treated product, and other residual streams associated with the minimization practice.

The residual/waste section requests information on the residuals/wastes for which minimization practices are used. The residual/waste and waste minimization practices sections should be completed as a set. If more than one residual/waste is treated separately by a minimization practice, complete more than one residual/waste section and attach it to the corresponding practices section. Likewise, if more than one minimization practice is being used to treat one residual/waste or the same group of residuals/wastes, complete the appropriate number of residual/waste sections and attach them to the corresponding minimization practice sections.

The following are instructions for completing each section. Please read all of the instructions before completing the questionnaire. Two examples of completed questionnaires are

attached to these instructions. Example "A" covers a hypothetical case where a refinery installed a pressure filter system to dewater tank bottom sludge in order to reduce the amount and cost of outside disposal. Example "B" covers a hypothetical case of oil from tank cleaning which avoided the need to scrape up and dispose of oily dirt to outside facilities.

FACILITY INFORMATION SECTION

The facility information section requests information on the facility using a particular waste minimization practice. These data will facilitate understanding of the quantity of residuals/wastes generated.

F1. Enter the name of the person completing the form; the company name, location, and address; and, the telephone number of the individual either completing the questionnaire or coordinating its completion if several individual are involved.

The facility code should be left blank; it will be assigned by Mittelhauser upon receipt of the completed questionnaire.

F2. Identify the capacity of your facility according to the categories shown. Please use the units given.

RESIDUAL/WASTE INFORMATION SECTION

This section requests information on the residual(s)/waste(s) of interest. As previously discussed, more than one residual/waste section may be completed for one minimization practices section. The appropriate residual/waste section(s) should be attached to the corresponding minimization practices section(s) as a set.

If several wastes are treated by one minimization practice and a composite analysis is available, just complete one residual/waste section. If the wastes are not treated together or a composite analysis is not available, complete separate residual/waste sections.

R1. Identify the residual/waste stream(s) that are described on that sheet.
Try to use common industry terms for describing the waste rather than names that are unique to your facility.

R2. List the source(s) of the residual(s)/waste(s), e.g. a process unit or a particular operation or maintenance activity. If one piece of equipment is the sole source, please list the unit and equipment name.

R3. Please list annual quantities produced prior to implementation of the waste minimization practice. Use units shown if possible.

R4. State past management method prior to use of the

residual/waste minimization practice.

R5. Check whether the residual/waste is a solid, liquid, or sludge. If the waste is unusual, please describe it in the "other" category. For mixtures of phases, such as sludges or emulsions, please give the approximate overall composition. State the analytical method number that was used to obtain the data. Also list the extractant (like freon, methylene chloride, or THF) that was used to extract the oil phase of the sample.

Also provide available information on the concentration of metals or organic constituents that could be of interest.

WASTE MINIMIZATION PRACTICES SECTION

This section requests information on a particular minimization practice. As previously discussed, this section should be attached to the applicable residual/waste information section(s).

P1. Give the name, or describe, the minimization practice of interest. Examples could be oily sludge filtration, reduction in the quantity of surfactants used for cleaning in the refinery, use of an amine reclaimer, thermal stripping of contaminated soils, etc.

P2. Check the proper classification of the practice described. For recycling, check whether unit, facility, or off-site.

P3. If the practice is a process, piece of equipment, or a purchased commodity that is available from a licensor or manufacturer, give that organization's name, address, and telephone number.

P4. Some waste minimization practices of interest in this project have been used commercially; others have been tested on a pilot or demonstration scale. Please check the appropriate box.

Questions P5 through P10 request cost and performance information on your particular waste minimization application.

P5. List the capacity of the practice used. For a process unit or piece of equipment, this amount would be the capacity of the unit. For example, for catalyst recycling list the total quantity of catalyst sent to that recycler; if a dry sweeper is used to capture solids before they are released into the wastewater drains, give the quantity of solids captured per unit of time; or if a consumable raw material is replaced by another material that will result in waste minimization, list the quantity of the original material. If the practice is only laboratory-scale, please indicate such and give the extrapolated production-level amount anticipated.

P6. Check whether the practice results in a reduction in residual/waste quantity, toxicity, or both.

If the practice involves a capital expenditure, please complete question P7. If the practice involves only procurement of a service or different consumable material, please complete question P8 instead.

P7. For a practice that requires a capital expenditure, give the capital cost of the unit or equipment corresponding to the installed capacity given in P5. Next, provide the requested information on operating requirements as appropriate. Please do not give costs for utilities. These costs can vary significantly from plant to plant. Please provide the unit cost for chemicals along with a description and supplies name. Please leave no blanks; use N.A. if not applicable or "unknown" where applicable.

P8. This section should be completed if the practice involves only the use of a service or consumable material; e.g., if FCCU catalyst is sent to a cement manufacturing facility rather than to a disposal site. Another example is the use of sodium hydroxide to neutralize an acid stream instead of lime to avoid production of a sludge.

Describe the operation prior to application of the minimization practice. Also give unit costs per barrel, pound, etc., and annual costs for either services or consumable materials. Provide the same information after application of the minimization practice.

P9. This item requests information on a block flow diagram to determine the overall effectiveness of the practice and to assess the characteristics of any secondary wastes, emissions, or effluents that are produced. Figure 1 should be completed to understand the waste practice.

Stream #1 is the residual/waste that is subject to the minimization practice.
Stream #2 is the minimized residual/waste. Please designate the method for its disposal or recycling. For example, filter cake from a sludge filtration unit could be designated for disposal to an off-site landfill. If this same stream is sent to a coker for injection, the designation would be "recycled to coker."
Stream #3 is used to designate a chemical that is used as part of waste minimization, e.g. be lime bodyfeed used as part of a filtration operation.
Stream #4 is used to designate any air emissions directly related to the practice.

A secondary stream, such as a wastewater stream that is separated from the residual/waste as a consequence of the minimization practice, is designated as Stream #5. Please

designate whether it is treated, recycled, or disposed, and briefly describe the method.

P10. If information is available on the environmental characteristics of any product or residual stream described in P9, please provide data. Use a separate copy of the P10 page for each stream from P9 for which data are available.

P11. Please provide any additional descriptive information that will assist in understanding the minimization practice.

WASTE MINIMIZATION PRACTICES QUESTIONNAIRE

FACILITY INFORMATION SECTION

F1. PERSON COMPLETING FORM _____ FACILITY CODE _____

COMPANY NAME _____

LOCATION _____

ADDRESS _____

_____

_____

TELEPHONE _____

F2. FACILITY SIZE:

MARKETING FACILITY: Storage Capacity, _____ bbls

REFINERY: Crude Charge, _____ bpsd

PRODUCTION FACILITY: Crude and Condensates Produced, _____ bpd

WASTE MINIMIZATION PRACTICES QUESTIONNAIRE

RESIDUAL/WASTE INFORMATION SECTION

R1. RESIDUAL/WASTE STREAM _____

R2. SOURCE (UNITS) _____

R3. ANNUAL QUANTITY PRODUCED _____ tpy, bbl/yr (Circle One)

R4. MANAGEMENT METHOD WITHOUT WASTE MINIMIZATION _____

_____

_____

R5. RESIDUAL/WASTE CHARACTERIZATION:

WASTE TYPE: (Check One) Solid _____ Liquid _____ Sludge _____

Other _____, please describe _____

COMPOSITION: % OIL _____ METHOD _____ EXTRACTANT _____

% SOLIDS _____ METHOD _____

% H_2O _____ METHOD _____

METAL CONCENTRATIONS (indicate ppm under applicable toxicity test)

	EP	TCLP		EP	TCLP		EP	TCLP
Antimony			Chromium (+3)			Nickel		
Arsenic			Cobalt			Selenium		
			Copper			Silver		
Barium			Fluoride salts			Thallium		
Beryllium			Lead			Vanadium		
Cadmium			Mercury			Zinc		
Chromium (+6)			Molybdenum			Asbestos		

PRIMARY HAZARDOUS ORGANIC CONSTITUENTS OF CONCERN:

Constituent	Estimated Concentrations, ppm TOTAL	TCLP

WASTE MINIMIZATION PRACTICES QUESTIONNAIRE

WASTE MINIMIZATION PRACTICES SECTION

P1. MINIMIZATION PRACTICE _____

_____

ATTACH A DESCRIPTION OF MINIMIZATION PRACTICE AND GENERAL FLOW SKETCH, APPROPRIATE

P2. CLASSIFICATION (CHECK):

SOURCE REDUCTION _____

RECYCLING
- UNIT _____
- FACILITY _____
- OFF-SITE _____

TREATMENT _____

P3. VENDOR FOR WASTE MINIMIZATION PRACTICE

VENDOR _____ NAME _____

ADDRESS _____

TELEPHONE _____

P4. TYPE OF USE (CHECK ONE):

COMMERCIAL _____ TEST _____

P5. CAPACITY: _____

P6. TYPE OF REDUCTION ACHIEVED: _____ QUANTITY
_____ TOXICITY
_____ BOTH OF ABOVE

P7. PROCESS UNIT OR EQUIPMENT COSTS:

ESTIMATED CAPITAL COST: _____

OPERATING REQUIREMENTS: _____

WATER	_____	gallons per day
	_____	gallons/barrel of waste feed
ELECTRICAL	_____	kwh or Hp
	_____	kwh or Hp/barrel of waste fee
STEAM	_____	pounds per hour
	_____	@ PSIG
	_____	pounds/barrel of waste feed
AUXILIARY CHEMICALS	_____	gpm, COST _____
	_____	gpm, COST _____
	_____	gpm, COST _____

FUEL	_____	BTU/HR
	_____	BTU/barrel of waste feed
OPERATING LABOR	_____	men/shift
MAINTENANCE FACTOR	_____	% of capital cost (annual)

Comments regarding process operations: _____

_____

_____

_____

_____

_____

P8. SERVICES OR CONSUMABLE MATERIALS:

OPERATION PRIOR TO MINIMIZATION _____

_____

_____

OPERATION AFTER WASTE MINIMIZATION _____

_____

_____

	Prior to Waste Minimization	After Waste Minimization
UNIT COST OF SERVICE:	_____	_____
ANNUAL COST OF SERVICE:	_____	_____
UNIT COST OF CONSUMABLE MATERIAL:	_____	_____
ANNUAL COST OF CONSUMABLE MATERIAL:	_____	_____

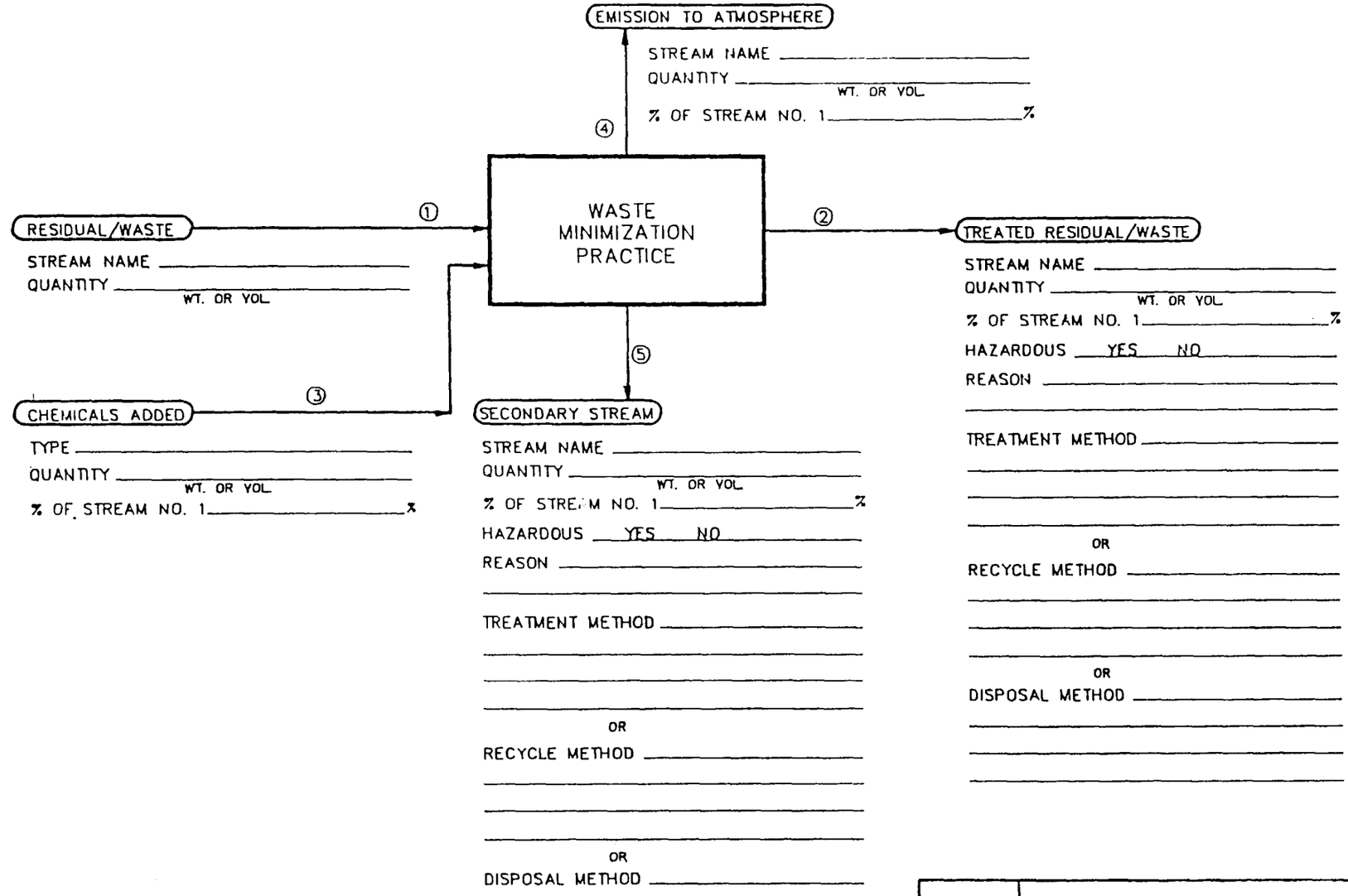
EMISSION TO ATMOSPHERE
STREAM NAME
QUANTITY
WT. OR VOL.
% OF STREAM NO. 1 %
④
WASTE MINIMIZATION PRACTICE
RESIDUAL/WASTE
①
STREAM NAME
QUANTITY
WT. OR VOL.
②
TREATED RESIDUAL/WASTE
STREAM NAME
QUANTITY
WT. OR VOL.
% OF STREAM NO. 1 %
HAZARDOUS YES NO
REASON
TREATMENT METHOD
OR
RECYCLE METHOD
OR
DISPOSAL METHOD
⑤
CHEMICALS ADDED
③
TYPE
QUANTITY
WT. OR VOL.
% OF STREAM NO. 1 %
SECONDARY STREAM
STREAM NAME
QUANTITY
WT. OR VOL.
% OF STREAM NO. 1 %
HAZARDOUS YES NO
REASON
TREATMENT METHOD
OR
RECYCLE METHOD
OR
DISPOSAL METHOD
P9
BLOCK FLOW DESCRIPTION

WASTE MINIMIZATION PRACTICES QUESTIONNAIRE

WASTE MINIMIZATION PRACTICES (CONT)

P10. RESIDUAL/WASTE CHARACTERIZATION:

STREAM NO: _____

WASTE TYPE: (Check One) Solid _____ Liquid _____ Sludge _____

Other_____, describe_____

COMPOSITION: % OIL _____ METHOD _____ EXTRACTANT_____

% SOLIDS _____ METHOD _____

% H_2O _____ METHOD _____

METAL CONCENTRATIONS (indicate ppm under applicable toxicity test)

	EP	TCLP		EP	TCLP		EP	TCLP
Antimony			Chromium (+3)			Nickel		
Arsenic			Cobalt			Selenium		
			Copper			Silver		
Barium			Fluoride salts			Thallium		
Beryllium			Lead			Vanadium		
Cadmium			Mercury			Zinc		
Chromium (+6)			Molybdenum			Asbestos		

PRIMARY HAZARDOUS ORGANIC CONSTITUENTS OF CONCERN:

Constituent	Estimated Concentrations, ppm TOTAL	TCLP

P11. PLEASE PROVIDE AVAILABLE INFORMATION LIKE DESCRIPTIONS, FLOW DIAGRAMS, CASE STUDIES, ETC., TO AID IN UNDERSTANDING THE MINIMIZATION PRACTICE.

APPENDIX B

LETTER OF TRANSMITTAL FOR PRODUCTION, REFINING, AND MARKETING

(TRANSMITTAL LETTER FOR EXPLORATION AND PRODUCTION)

Date

Name
Street
State

Salutation:

The American Petroleum Institute (API) has retained Mittelhauser Corporation to prepare a study of waste minimization practices at petroleum industry facilities. This survey is part of API's program to encourage waste minimization in the petroleum industry. API believes that, given the costs and future liabilities associated with disposal, waste minimization will play a critical role in managing our industry's wastes. Furthermore, both EPA and Congress have stated that industry should aggressively minimize its wastes.

This study will document waste minimization practices that have been successfully used at petroleum facilities to reduce the quantity or toxicity of residuals/wastes that are generated. The goal of this project is to describe the range of industry practices rather than to select or prescribe any one standard practice or practices.

As part of this contract, API has requested that Mittelhauser conduct a survey of selected petroleum industry facilities to obtain information on successful waste minimization practices. In this regard, we request that you complete the enclosed survey questionnaire and return it to Mittelhauser

Corporation at the following address:

Mittelhauser Corporation
Attn: Herb Morgan
23272 Mill Creek Road, Suite 300
Laguna Hills, CA 92653

Upon receipt of each response, Mittelhauser Corporation will assign a facility code, which will be used to reference the response. Facilities will not be identified in the compendium by company name or location, only by code. The actual facility identities may only be obtained by submitting a written request to API.

We are particularly interested in minimization practices related to the following wastes:

- Solvents and chemicals
- Tank bottoms and other oily sludges
- Scrubber solutions
- Work-over fluids
- Diatomaceous earth
- Completion fluids
- Stretford solution
- Filter media and cartridges
- Maintenance debris
- Weed killers
- Used lube oil
- Spent acids or caustics
- Spent catalysts
- Spent amines and glycols
- Oily dirt and
- Iron sponge
- Molecular sieves

As discussed in the instructions, your responses should include minimization practices that are used on nonhazardous as well as hazardous wastes. Also, please consider and submit responses on all practices you may use, even if they are not listed above.

If you have any questions regarding completion of this questionnaire, please call either Mr. Tom Atkins or Mr. Herb Morgan of Mittelhauser at (714) 472-2444. If you have questions regarding the reasoning or conceptual background for this program, please call me at (202) 682-8477. We request that your questionnaire be completed and mailed to Mittelhauser by May 11, 1988.

Sincerely,

Paul S. Price
Senior Regulatory Analyst

PSP:
P979AI

(TRANSMITTAL LETTER FOR REFINING)

Date

Name
Street
State

Salutation:

The American Petroleum Institute (API) has retained Mittelhauser Corporation to prepare a study of waste minimization practices at petroleum industry facilities. This survey is part of API's program to encourage waste minimization in the petroleum industry. API believes that, given the costs and future liabilities associated with disposal, waste minimization will play a critical role in managing our industry's wastes. Furthermore, both EPA and Congress have stated that industry should aggressively minimize its wastes.

This study will document waste minimization practices that have been successfully used at petroleum facilities to reduce the quantity or toxicity of residuals/wastes that are generated. The goal of this project is to describe the range of industry practices rather than to select or prescribe any one standard practice or practices.

As part of this contract, API has requested that Mittelhauser conduct a survey of selected petroleum industry facilities to obtain information on successful waste minimization practices. In this regard, we request that you complete the enclosed survey questionnaire and return it to Mittelhauser Corporation at the following address:

Mittelhauser Corporation
Attn: Herb Morgan
23272 Mill Creek Road, Suite 300
Laguna Hills, CA 92653

Upon receipt of each response, Mittelhauser Corporation will assign a facility reference the response. Facilities will not be identified in the compendium be company name of location, only by code. The actual facility identity may be obtained only by submitting a written request to API.

We are particularly interested in minimization practices related to the following wastes:

- Oily sludges
- Stretford solution
- Amine sludges
- Acid sludges
- Chemical sludges
- Solvents and chemicals
- Spent catalysts
- Spent caustic
- Filter clays and cartridges
- Tank bottoms
- Alky sludge
- Biosolids
- Off-test lubes and greases
- bundle cleaning sludge
- heater decoking and
- maintenance debris

As discussed in the instructions, your responses should include minimization practices that are used on nonhazardous as well as hazardous wastes. Also, please consider and responses on all practices you may use, even if they are not listed above.

If you have any questions regarding completion of this questionnaire, please call either Mr. Tom Atkins or Mr. Herb Morgan at (714) 472-2444. If you have any questions regarding the reasoning or conceptual background for this program, please call me at (202) 682-8477. We request that your questionnaire be completed and mailed to Mittelhauser by May 11, 1988.

Sincerely,

Paul S. Price
Senior Regulatory Analyst

PSP:
P979AJ

(TRANSMITTAL LETTER FOR MARKETING)

Date

Name
Street
State

Salutation:

The American Petroleum Institute (API) has retained Mittelhauser Corporation to prepare a study of waste minimization practices at petroleum industry of API's program to encourage waste minimization in the petroleum industry. API believes that, given the costs and future liabilities associated with disposal, waste minimization will play a critical role in managing our industry's wastes. Furthermore, both EPA and Congress have stated that industry should aggressively minimize its wastes.

This study will document waste minimization practices that have been successfully used at petroleum facilities to reduce the quantity or toxicity of residuals/wastes that are generated. The goal of this project is to describe the range of industry practices rather than to select or prescribe any one standard practice or practices.

As part of this contract, API has requested that Mittelhauser conduct a survey of selected petroleum industry facilities to obtain information on successful waste minimization practices. In this regard, we request that you complete the enclosed survey questionnaire and return it to Mittelhauser Corporation at the following address:

Mittelhauser Corporation
Attn: Herb Morgan
23272 Mill Creek Road, Suite 300
Laguna Hills, CA 92653

We are particularly interested in minimization practices related to the following wastes:

- Contaminated fuels and lubricants
- Contaminated soils
- Tank bottoms

- SPCC tank bottoms
- Truck washing
- Truck "retains"
- Maintenance activities and
- Spent filter cartridges

As discussed in the instructions, your responses should include minimization practices that are used on nonhazardous as well as hazardous wastes. Also, please consider and submit responses on all practices you may use, even if they are not listed above.

If you have any questions regarding completion of this questionnaire, please call either Mr. Tom Atkins or Mr. Herbert N. Morgan at Mittelhauser Corporation at (714) 472-2444. If you have any questions regarding the reasoning or conceptual background for this program, please call me at (202) 682-8477. We request that your questionnaire be completed and mailed to Mittelhauser by May 11, 1988.

Sincerely,

Paul S. Price
Senior Regulatory Analyst

PSP:
P979AK

EPA/600/8-91/052
August 1991

INDUSTRIAL POLLUTION PREVENTION OPPORTUNITIES FOR THE 1990s

by

Ivars J. Licis
Waste Minimization, Destruction
and Disposal Research Division
Risk Reduction Engineering Laboratory
Cincinnati, OH 45268

based on draft information by

Herbert S. Skovronek
Science Applications International Corporation
Paramus, New Jersey 07652

and

Marvin Drabkin
Versar Inc.
Springfield, Virginia 22101

Task 0-9
EPA Contract No. 68-C8-0062

Technical Project Manager

Ivars J. Licis
Waste Minimization, Destruction
and Disposal Research Division
Risk Reduction Engineering Research Laboratory
Cincinnati, Ohio 45268

RISK REDUCTION ENGINEERING LABORATORY
OFFICE OF RESEARCH AND DEVELOPMENT
U. S. ENVIRONMENTAL PROTECTION AGENCY
CINCINNATI, OHIO 45268

Printed on Recycled Paper

PETROLEUM INDUSTRY (291)

This industry is unique in that its raw materials, its primary wastes, and its products can be considered as one. Considering all aspects of the industry, from petroleum drilling to the various hydrocarbon modification processes (cracking, hydrogenation, etc.), source reduction and recovery/recycle largely become indistinguishable. Recovery of a waste from one segment readily becomes source reduction at a later segment. From a perspective within the industry, raw material substitution is not an option available for this industry, although substitutions in catalysts, acids, etc., could be possible, along with schemes for conservation. Improvements in processes that have potential for reducing waste should be evaluated as they are defined. From an outside industry perspective, a significant amount of commentary exists regarding the substitution of other, renewable sources of energy so that this source is conserved for applications for which good substitutes do not exist. Studies to evaluate the pollution prevention potential or impact for the various fuel alternatives can be a very important, for longer range research.

The area of drilling and drilling muds was noted as one that would be attractive for waste minimization and for EPA collaboration. Improved drilling muds, with decreased toxicity, handling, processing would be of interest. Enhanced recovery of oil from existing wells and from oil-soaked sands are two potential areas where the industry may be receptive to cooperative research with EPA, although the industry has and is carrying out significant research in this area.

Throughout the petroleum industry, improved separation practices would benefit a variety of oily water wastes, allowing the oil to be recovered and the water to be reused or disposed of with minimal treatment. Emulsion-breaking could be one key aspect of such investigations. In certain segments of the industry, such as well drilling, the water is also heavily laden with salts and additional processing, perhaps by reverse osmosis, would be required to gain sufficient benefit to make separation cost-effective. The separation issue is significant in most industries and is discussed under the generic technology section.

Tank bottoms are a current problem that needs the development of processes/technologies that enable reuse and recycling of the sludge. Coking of the carbon-rich sludges has been considered and may warrant further attention. Recovery and reuse of other wastes, such as sulfuric acid and spent catalysts, could present other opportunities. Recovery and reprocessing of spilled oils via mobile or satellite plants could be an area of study. Traditionally, the urgency of a spill is such that reuse of the recovered substance has not been a primary factor in selecting recovery technology.

An interesting study might be to determine whether the national petroleum picture - including its environmental aspects - would benefit if different plants were "assigned" to ongoing production of single products or single product [illegible] (one could make the same argument for other industries, such as [illegible], electroplating, etc.)

TABLE A-2 - INDUSTRIAL WASTE MINIMIZATION OPPORTUNITIES

INDUSTRY	SIC	PERCEIVED NEED	PROPOSED SOLUTIONS IF KNOWN	STATUS	POTENTIAL IMPACTS OF CHANGE	TRANSFER POTENTIAL
Petroleum Refining	291	Improved location of productive wells	Unknown beyond the industry's already extensive efforts	R&D, constantly	Minimize dry holes, muds, etc.	limited by confidentiality in industry
		Improved drilling muds; less toxic	"	"	Reduced toxicity of muds	limited by confidentiality in industry
		Enhanced oil recovery from sands, muds, etc.	"	"	Cleanup of existing wastes, increase yield	limited by confidentiality in industry
		Oily water separ. Emulsion breaking; Salt removal; oil to feedstock	Improved hardware and fundamental studies on O/W separation. Possible multi-step processing	---	Discharge of cleaner water or reuse of water. Recycle of oil	only limited by confidentiality Widespread if public domain
		Tank bottom reuse	Convert to usable products, e.g., coke	Known-may not be cost effective currently	Eliminate waste Increase yield	limited by confidentiality Some if public domain
		Spilled Oil Recovery and Prevention	Extensive EPA R&D underway	R&D ongoing	Eliminate contamination; recycle of product	high
Steel Industry		Pollution control from coke making	Dry quenching of coke	In use outside U.S.	Eliminate suspect carcinogen particulates, VOC's, etc.	limited and slow

R2176-4

TREATMENT OF WASTE GAS TO REMOVE HYDROGEN SULFIDE AND PRODUCE ELEMENTAL SULFUR

A. F. Vil'danov, V. N. Sharifullin,
A. M. Mazgarov, and L. I. Nigmatullina

UDC 665.632.074.3

In many petroleum refineries and gas processing plants, gaseous discharges containing hydrogen sulfide (such as regeneration gas from amine treating units, gas from carbonation and concentration of sour caustic waste, etc.), owing to the small volumes and low concent tion of hydrogen sulfide, cannot be processed to yield elemental sulfur in Claus units; co sequently, such gases are burned in flares. Ecological problems and the shortage of eleme sulfur require the utilization of these waste products in the production of elemental sulf

In worldwide practice, the methods used to treat low-sulfur gas or small volumes of h sulfur gas to remove hydrogen sulfide are based on liquid-phase oxidation of the hydrogen fide to elemental sulfur by molecular oxygen [1]. The absorbents are weakly alkaline aque solutions containing some type of catalyst. However, the aqueous solutions have a number disadvantages, of which the most serious are the low reaction rate and the formation of up 20% thiosulfate as a by-product. According to [2, 3], the oxidation of hydrogen sulfide to elemental sulfur in certain polar organic solvents proceeds at a high rate and with practi no by-product formation.

As a result of laboratory studies, a catalyst complex (CC) has been developed on the basis of dimethylformamide or dimethylacetamide, in which the hydrogen sulfide is oxidized elemental sulfur at a high rate with practically no by-product formation [4]. The following equation has been obtained for the reaction rate r in moles/(liter·sec):

$$r = 3.25 \cdot 10^{14} \exp \frac{-68\,000}{RT} [H_2S]\,[O_2]\,[KT]^{*}$$

where R is the gas constant, 8.31 J/(mole·°K); T is the temperature, °K.

For the treatment of acidic waste gases, we selected a sparged column without internal with countercurrent gas and liquid flow (Fig. 1). In view of the differing solubility of h

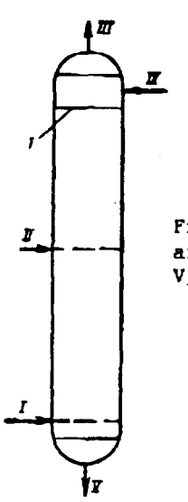

Fig. 1. Diagram of reactor: I) level of CC; I) air; II) acidic gas; III) purified gas; IV) CC; V) CC + sulfur to filtration.

* The "KT" is as in the Russian original; it is not clear whether this denotes the concentra tion of catalyst or the concentration of catalyst complex, the latter being denoted in the original Russian text as KK and rendered here as CC — Translator.

All-Union Scientific-Research Institute of Hydrocarbon Feedstocks (VNIIUS). Translate from Khimiya i Tekhnologiya Topliv i Masel, No. 1, pp. 39-41, January, 1986.

 0009-3092/86/0102-0052$12.50 © 1986 Plenum Publishing Corporation

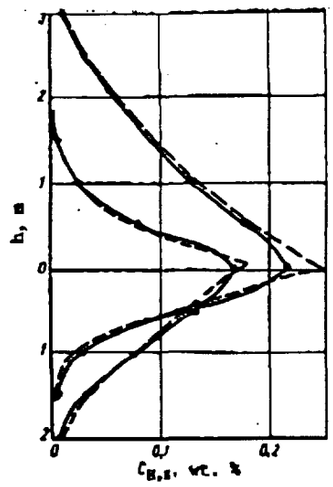

Fig. 2. Experimental (continuous curves) and calculated (dashed curves) profiles of distribution of hydrogen sulfide concentrations C_{H_2S} with respect to height h in reactor, for two different sets of treating conditions.

drogen sulfide and oxygen, and also the low pressure of the acidic gases (below 0.07 MPa), the air was fed into the bottom section of the column, and the hydrogen sulfide-containing gas into the middle section of the column. Thus, what is taking place in the upper section of the column is mainly absorption of hydrogen sulfide, and in the lower section, oxidation of the hydrogen sulfide to elemental sulfur.

With the aim of finding the optimal process conditions, we performed experiments on the treatment of gas consisting of 40% hydrogen sulfide and 60% carbon dioxide, varying the flow rates of air, raw gas, and adsorbent, as well as the height of the upper and lower zon of the reactor. The profiles that we obtained for the vertical distribution of hydrogen sulfide concentration in the CC (Fig. 2), were used in developing a mathematical model of the process.

The treatment of acidic gases to remove hydrogen sulfide is a chemical absorption process in which the absorption of hydrogen sulfide and oxygen is accompanied by chemical inte action in the liquid phase. From an analysis of the experimental profiles for the distribution of hydrogen sulfide concentration in the liquid phase, it can be seen that this proces is quite slow. Consequently, the mass transfer coefficient does not depend on the reaction rate [5, 6]. From the results of the kinetic studies, we obtained equations for the reacti rate:

$$dx_1/d\tau = -2kx_1x_2 \quad (1$$

$$dx_2/d\tau = -kx_1x_2 \quad (2$$

where x_1 and x_2 are the respective concentrations of hydrogen sulfide and oxygen in the liquid phase, kmoles/m^3; τ is the time, sec; $k = 1.62 \cdot 10^{12} \exp(-68{,}000/RT)$ is the reduced rate constant of the reaction, m^3/(kmoles·sec).

For a mathematical description of the chemical absorption of hydrogen sulfide and oxyg in a sparged column, we have written material and heat balance equations that take into account the structure of the gas and liquid streams, the reaction kinetics, and mass transfer The gas and liquid stream structures in the laboratory and pilot-plant columns are describe by plug-flow models. The material balance equations for the upper section of the column have the form

$$\frac{A}{S}\frac{dx_1}{dh} = K_{V1}(x_1^* - x_1) - 2kx_1x_2 \quad (3$$

$$\frac{A}{S}\frac{dx_2}{dh} = K_{V1}(x_2^* - x_2) - kx_1x_2 \quad (4$$

$$\frac{G_1 + G_2}{\varphi_g S}\frac{dy_1}{dh} = K_{V1}(x_1^* - x_1) \quad (5$$

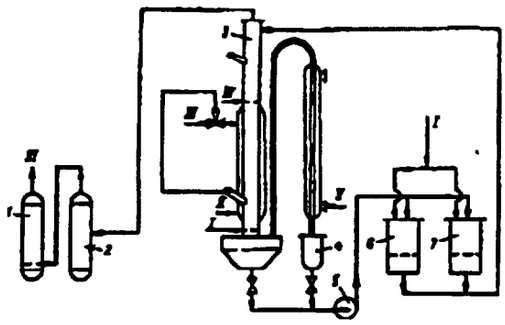

Fig. 3. Simplified flow plan of pilot-plant unit for removal of hydrogen sulfide from acidic gas: 1) absorber; 2) separator; 3) reactor; 4) crystallizer; 5) pump; 6, 7) filters; I) air; II) condensate; III) steam; IV) acidic gas; V) water; VI) purified gas.

$$\frac{G_1+G_2}{\varphi_g S}\frac{dy_2}{dh}=K_{V1}(x_1^*-x_1) \quad (6$$

where $A = L(1-\varphi_g)$, m^3/g; L is the liquid flow rate, m^3/h; φ_g is the gas content; S is the cross-sectional area of the column, m^2; h is the column height, m; K is the mass transfer coefficient in the upper section, h^{-1}; x_1^* and x_1 are the respective equilibrium concentrations of hydrogen sulfide on oxygen in the liquid phase, kmoles/m^3; G_1 and G_2 are the respective concentrations of hydrogen sulfide and oxygen in the gas phase, kmoles/m^3.

The equilibrium concentrations are determined on the basis of Henry's law:

$$\left.\begin{aligned} x_1^*&=H_1p_1=H_1RTy_1\\ x_2^*&=H_2p_2=H_2RTy_2\end{aligned}\right\} \quad (7$$

where H_1 and H_2 are the respective solubility constants of hydrogen sulfide and oxygen in the liquid, kmoles/(m^3·MPa); p_1 and p_2 are the respective partial pressures of hydrogen sulfide and oxygen in the gas, MPa.

The material balance equations for the lower section of the column are as follows:

$$\frac{A}{S}\frac{dx_1}{dh}=-2kx_1x_2 \quad (8$$

$$\frac{A}{S}\frac{dx_2}{dh}=K_{V2}(x_2^*-x_2)-kx_1x_2 \quad (9$$

$$\frac{G_2}{(1-\varphi_g)S}\frac{dy_2}{dh}=K_{V2}(x_2^*-x_2) \quad (10$$

where K_{V_2} is the mass transfer coefficient in the lower section, h^{-1}

The heat balance equation of the column is

$$\frac{A}{S}=\frac{dT}{dh}=\frac{\Delta H_r}{c_p\rho}kx_1x_2 \quad (11$$

where ΔH_r is the heat of reaction, kJ/mole; c_p is the heat capacity of the liquid kJ/kg; ρ is the liquid density, kg/m^3.

A calculational algorithm has been developed and a program written for the solution of the system of equations (3)-(11).

From the experimentally determined profiles of vertical distribution of hydrogen sulfide concentration in the liquid in the column, the unknown parameters of the equations K_{V_1} and K_{V_2} were determined for the upper and lower sections. A test of the adequacy of this model demonstrated satisfactory agreement between the calculated and experimental profiles of vertical distribution of hydrogen sulfide concentration in the column (see Fig. 2)

The mathematical model and the laboratory test data have been used in designing and constructing a pilot plant unit for processing acidic gases (Fig. 3) to produce elemental sulfur in a unit for desulfurization of associated petroleum gas at the Industrial Association "Tatneft'." The acidic gas and the air are fed through distributors, the acidic gas

into the middle of the reactor and the air into the still; the reactor is a metal column, without internals, diameter 200 mm and height 10 m. The temperature in the still section o the reactor is held at 50°C. The CC, at 20-30°C, is fed to the upper section of the reactor. The required level of CC in the reactor is held by means of a U-shaped hydraulic sea The spent air along with the treated gas is directed from the top of the reactor to a sepa tor to collect drops of entrained CC, after which it passes to a caustic absorber for con neutralization. The treated waste gas from the absorber is discharged to the atmosphere. elemental sulfur that is formed in the reactor is withdrawn along with the CC through the draulic seal to a crystallizer, where the solution is cooled to crystallize out the dissol sulfur. The slurry is picked up from the crystallizer by means of a screw pump and fed to filters. The filtrate is returned continuously to the top of the reactor. The elemental s fur, when enough has accumulated, is washed, air-dried, and unloaded.

The unit has been operated for a period of one month in treating an acidic regenerati gas from a monoethanolamine treating unit, containing 40% hydrogen sulfide by weight. The operating conditions of the pilot-plant unit were as follows: CC feed rate 0.5-2.0 m^3/h; acidic gas feed rate 2-4 m^3/h; air feed rate 8-12 m^3/h; reactor still temperature 50°C; re actor top temperature 40°C. Under all operating conditions, no hydrogen sulfide was found in the off-gas. The sulfur that was obtained meets the requirements of GOST [All-Union St Standard] 126-79, "Sulfur, Technical, Gas."

On the basis of the results obtained in these studies, engineering guidelines have be developed for the design of a unit for the treatment of gas obtained in carbonation of sou caustic waste for the Industrial Association "Salavatnefteorgsintez." The economic advant when this unit is put into service will be 140,000 rubles/yr.

The process is recommended for the treatment of regeneration gas from monoethanolamin treating units in plants that do not have Claus units, for the treatment of gas obtained i the carbonation of sour caustic waste, and for the utilization of waste gases containing h drogen sulfide that are obtained in various types of petrochemical production.

LITERATURE CITED

1. A. L. Kohl and F. C. Riesenfeld, Gas Purification, McGraw-Hill, New York (1960).
2. I. I. Kocherga and O. M. Baram, Zh. Vses. Khim. Ova., 14, No. 5, 584-585 (1969).
3. I. I. Kocherga, V. M. Soldatov, and O. M. Baram, Khim. Tekhnol., No. 6, 53-54 (1976).
4. A. F. Vil'danov, A. M. Fakhriev, L. A. Kashevarov, et al., in: Summaries of Papers fr 3rd All-Union Seminar "Improvement of Processes of Gas Fractionation and Desulfurizat of Hydrocarbon Feedstocks" [in Russian], Kazan', September 14-16, 183; published by TsNIITEneftekhim, Moscow (1983), p. 58.
5. P. V. Danckwerts, Gas-Liquid Reactions, McGraw-Hill, New York (1970).
6. G. Astarita, Mass Transfer with Chemical Reaction, Elsevier, London (1967).