PN-ABY-032

The Hashemite Kingdom of Jordan

Ministry of Water and Irrigation

Water Quality Improvement and Conservation Project

Industrial Audit: Background Material

Thermal Electric Power Plant Industry

Harza Environmental Services, Inc.

Development Alternatives, Inc.

The Technical Assistance Team Includes:

Development Alternatives, Inc.
Science Applications International Corp.
Harza Environmental Services, Inc.
Development Associates, Inc.

USAID

United States Agency for International Development
Contract No. 278-0288-00-C-4026-00

December 1994

PN-ABY-032

BACKGROUND MATERIAL REPORT

THERMAL ELECTRIC POWER INDUSTRY

Submitted to:

United States Agency
for International Development
Amman Chamber of Industry, Jordan
Ministry of Water and Irrigation, Jordan

Submitted by:

Development Alternatives, Inc.

Prepared by:

Harza Consulting Engineers and Scientists
Chicago, Illinois, USA

PREFACE/ACKNOWLEDGMENTS

This report presents the background materials for Thermal Electric Power Plant Industry prepared with emphasis on the pollution prevention/waste minimization (PP/WM) and water conservation practices for this industry. The report was prepared by Dr. Jeffrey T. Cline of Harza Consulting Engineers and Scientists (Harza), Chicago, Illinois, under subcontract with Development Alternatives, Inc. (DAI), Washington, D.C.

Efforts for preparation of this report was directed by Dr. Shawn R. Niaki, P.E., Pollution Prevention Program Director, of Harza; coordination with Dr. Usama Mudallal, Environmental Director, of the Amman Chamber of Industry (Chamber); and the member of the PP/WM Committee from the Ministry of Water and Irrigation (MWI) staff, Eng. Rania Khaleq, and the Water Autority of Jordan (WAJ) staff including Eng. Abdul Wahab Matar, Eng. Marwan Al-Tal, Eng. Nabeel Hejazeen, and Eng. Mohamad Lafi.

Special appreciation is given to Dr. Mohammed Bani Hani, Secretary General of MWI; Eng. Qusai Qushad, Seretary General of WAJ; Mr. Khaldun Abuhassan, Chairman of the Chamber; Mr. Walid Al-Khatib, Director Genaral of the Chamber; Dr. Muwaffaq Saqqar, Project Coordinator; and to DAI, as represented by Edwin D. Stains, Chief of Party; for their cooperation and confidence.

THERMAL ELECTRIC POWER PLANT INDUSTRY
BACKGROUND MATERIALS

INDUSTRIAL WASTEWATER DISCHARGE PREVENTION PROGRAM
WATER QUALITY IMPROVEMENT AND CONSERVATION PROJECT

Amman, Jordan

TABLE OF CONTENTS

1.0 INTRODUCTION 1
- 1.1 Background 1
- 1.2 Objectives 1

2.0 INDUSTRIAL OVERVIEW 3
- 2.1 Typical Processes of Steam Electric Power Plants 3
  - 2.1.1 Fuel Management 4
  - 2.1.2 Steam Production 4
  - 2.1.3 Steam Expansion 4
  - 2.1.4 Steam Condensation 4
  - 2.1.5 Electricity Generation 4
  - 2.1.6 Miscellaneous Operations 5
- 2.2 Alternative Power System: Combined Cycles 5
- 2.3 Wastes, Emissions, and Water Usage 5
  - 2.3.1 Fuel Management 5
  - 2.2.3 Steam Production 6
  - 2.3.3 Steam Expansion 7
  - 2.3.4 Steam Condensation 7
  - 2.3.5 Electricity Generation 8
  - 2.3.6 Water Treatment 9
  - 2.3.7 Miscellaneous Operations 9

3.0 THERMAL ELECTRIC POWER PLANT IN JORDAN 10

4.0 AREAS FOR POTENTIAL IMPROVEMENT 12
- 4.1 Pollution Prevention/Waste Minimization 12
  - 4.1.1 Water Treatment Wastes 12
  - 4.1.2 Flue Gas Desulfurization System Wastes 14
  - 4.1.3 NO_x Emissions 15
  - 4.1.4 Fly Ash 17
  - 4.1.5 Odor Problems 17
  - 4.1.6 General PP/WM Techniques 18
- 4.2 Water Conservation 18
  - 4.2.1 Flue Gas Desulfurization System Water Conservation 19
  - 4.2.2 Blowdown System Water Conservation 19
  - 4.2.3 Water Treatment System Water Conservation 20

THERMAL ELECTRIC POWER PLANT INDUSTRY
BACKGROUND MATERIALS

INDUSTRIAL WASTEWATER DISCHARGE PREVENTION PROGRAM
WATER QUALITY IMPROVEMENT AND CONSERVATION PROJECT

Amman, Jordan

TABLE OF CONTENTS (Continued)

4.2.4 Alternative Water Sources 20
4.2.5 General Water Conservation Techniques 20
4.3 Conclusions 21

5.0 REFERENCES 22

FIGURES

Figure 1 : Generalized Unit Process Diagram for a Typical Oil-Fired Steam Electric Power Plant

Figure 2: Generalized Waste and Water Diagram for a Typical Oil-Fired Steam Electric Power Plant

Figure 3: Al Hussein Thermal Power Station Site Plan

Figure 4: The Steam Cycle: Al Hussein Thermal Power Station

Figure 5: The Water Cycle: Al Hussein Thermal Power Station

1.0 INTRODUCTION

This document presents the materials collected as background information for a pollution prevention, waste minimization, and water conservation audit of Jordan's Al Hussein Thermal Power Station.

1.1 Background

Development Alternatives, Inc. (DAI) under a contract with the United States Agency for International Development (USAID) is performing an Industrial Wastewater Discharge Prevention Program (IWDPP) in Amman, Jordan. The IWDPP is one of the four components of the Water Quality Improvement and Conservation project, funded by the USAID. The IWDPP is being performed by DAI with full coordination between the Ministry of Water and Irrigation and the Amman Chamber of Industry. The IWDPP includes conducting audits, performing feasibility studies, and designing for demonstration activities at selected industrial facilities.

Pollution prevention and waste minimization (PP/WM) techniques are defined as any techniques to prevent or reduce waste generation by source reduction or recycling activities. These activities must reduce either the volumes or the concentrations of pollutants generated prior to treatment, storage, or disposal of the waste.

Based on a ranking methodology, the PP/WM Committee has selected ten industries with potential needs for PP/WM audits. One of these industries is the "thermal electric power plant." Harza Consulting Engineers and Scientists (Harza), Chicago/USA, has been retained by DAI to lead the PP/WM audit for this industry.

The purpose of these audits is to assist the industries in the Amman-Zarqa Basin to assess PP/WM problems and suggest alternative solutions to achieve desired levels of PP/WM, water conservation, and wastewater treatment under the following subtasks:

- Subtask 1.1 - Audit Coordination;
- Subtask 1.2 - PP/WM Background Materials Preparation;
- Subtask 1.3 - Pre-Investigation Meeting;
- Subtask 1.4 - Audit;
- Subtask 1.5 - Post-Inspection Meeting; and
- Subtask 1.6 - Audit Evaluation Report.

1.2 Objectives

In this document, background information has been assembled by performing a comprehensive literature review. The purpose of the literature review was to identify the available techniques and clean technologies being practiced for PP/WM and water conservation for the thermal electric power plant industry. To best address the industry practices in Jordan, the specific focus of the review is on the oil-fired steam electric segment of the industry.

The literature review included published literature and personal contacts with industry representatives and authorities. Persons contacted included researchers at the Massachusetts Institute of Technology, the United States Argonne National Laboratory, and the United States Environmental Protection Agency. The literature consisted of PP/WM related articles, industry journal articles and conference proceedings, power plant operations manuals, and books on pollution and controls.

Section 2.0 of this report provides a world-wide overview of the oil-fired steam electric power plant industry, while section 3.0 details the processes used at Jordan's Al Hussein Thermal Power Station. Section 4.0 describes areas for potential improvement in regards to PP/WM and water conservation. Finally, section 5.0 lists the main references consulted during the literature search. Copies of the appropriate sections of these references are provided under a separate cover.

2.0 INDUSTRIAL OVERVIEW

In this section, the processes and wastes, emissions and water usage of typical power plants will be presented. This will be compared to the Jordan Al Hussein Power Plant in the section entitled "Areas for Potential Improvement."

Steam electric power plants are production facilities of the thermal electric power industry. A steam electric power plant's product is electrical energy, and its primary raw materials are fuel, air, and water.

Currently, four fuels are used in a steam electric power plant: three fossil fuels - coal, natural gas, and fuel oil - and uranium, the basic fuel of commercial nuclear power. Reclaimed refuse is burned at some facilities, but is not likely to have a substantial impact on the industry within the foreseeable future. Jordan's largest power plant, the Al Hussein Thermal Power Station (HTPS), is primarily oil-fired. To best address the industry in Jordan, the focus of this report is on oil-fired steam electric plants and their water usage.

The commercial production of electrical energy requires the utilization and conversion of another form of energy. Present day steam electric power plants utilize the chemical energy of fossil fuels or the atomic energy of nuclear fuels to produce electrical energy in four stages. The first stage consists of burning the fuel in a boiler unit and converting water into steam with the heat of combustion. In the second stage the high-temperature, high-pressure steam enters a turbine where energy in the form of shaft work is removed; the turbine shaft is coupled to a generator which converts the mechanical energy into electrical energy. In the third stage the steam leaving the turbine is condensed to water (condensate), transferring heat to the cooling medium, which is typically water. Finally, the condensate is reintroduced into the boiler to complete the cycle.

2.1 Typical Processes of Steam Electric Power Plants

In this section, the major components of a typical power plant and the processes within those plants are briefly discussed.

Five major unit processes are associated with the four production stages of a steam electric power plant:

(1) The storage and handling of fuel related materials both before and after use;
(2) The production of steam;
(3) The expansion of the steam in a turbine which drives the electricity generator;
(4) The condensation of the steam leaving the turbine and its return to the boiler; and
(5) The generation of electrical energy from the rotating mechanical energy.

In addition, other miscellaneous operations, such as plant sanitation and water treatment, are associated with power plants. The unit processes are described for a typical oil-fired plant in the following subsections and illustrated in Figure 1, "Generalized Unit Process Diagram for a Typical Oil-Fired Steam Electric Power Plant."

2.1.1 Fuel Management

Three types of fuel oil are used in utility power plants: crude oil, distillate oil, and residual oil. Fuel oil must be delivered to the plant site, stored until used, combusted in the plant boiler, and the residual and spent fuel oil material stored on the premises or removed.

2.1.2 Steam Production

The heat produced by the combustion of fuel oil with air is transferred to water by radiation and convection to produce high-pressure steam. For maximum thermal efficiency the following steps are typically required, at a minimum.

First, high purity feed water enters the boiler through a series of tubes near the point where hot gases exit from the boiler. There it is heated to near the boiling point. Then the heated water flows to one or more drums connected by a number of tubes. The tubes are arranged in rows along the walls of the boiler. The water flows through the tubes and is vaporized to saturated steam by the radiant heat of combustion. The saturated steam is then further heated, primarily by convection of the hot gases. Finally, the gases are passed through a heat exchanger in order to preheat the air being blown into the boiler for fuel combustion.

2.1.3 Steam Expansion

The steam produced in the boiler is expanded in the turbine to produce mechanical energy by flowing through a succession of passages made up of blades mounted on alternately rotating and stationary discs. As the steam passes from disc to disc, it gives up its energy to turn the rotating blades and in the process loses pressure and increases in volume.

2.1.4 Steam Condensation

Steam electric power plants use a condenser to maintain a low turbine exhaust pressure by condensing the steam which is leaving the turbine, and then recovering the condensate for return to the boiler. Alternatively, the spent steam could be released directly to the atmosphere, thus avoiding the requirement for condenser systems. This would result in poor cycle efficiency and a requirement of large quantities of high purity boiler feed water.

The cooling medium supplied to condensers is typically water, but is sometimes air. The condenser system may have extensive auxiliary systems associated with it to release the heat absorbed by the cooling medium before discharging the medium to the environment. A common example is the evaporative wet cooling tower. Heated cooling water cascades down the open-air tower to release its heat to the atmosphere before discharging to a receiving water body or recycling to the condenser.

2.1.5 Electricity Generation

The actual generation of electrical energy is accomplished in a generator, usually directly connected to the turbine. The generator consists of a rotating element called a rotor revolving in a stationary frame. During the revolutions, electric current is generated and output for transmission.

2.1.6 Miscellaneous Operations

Power plant miscellaneous operations include sanitary and laboratory operations, general housekeeping, and construction activities.

2.2 Alternative Power System: Combined Cycles

Steam turbines are combined with gas turbines in what's known as a combined - cycle power plant. High temperature exhaust from the gas turbine produces steam in a heat-recovery steam generator. Usually several gas turbines are combined with a steam turbine because the commercial sizes are less than 200 MW.

The combined cycle is probably the most efficient commercial power system available. Most are fueled by natural gas or fuel oil. Fuel to power efficiencies are nominally 45% and could top 50%. Reheat is being applied in units as small as 10 MW. The small generators may even operate at the supercritical steam conditions of some of the large power plants. These systems tend to be more environmentally compatible.

Today, environmental considerations usually bear directly on steam-turbine design. More efficient units mean lower environmental impact/unit of power produced.

2.3 Wastes, Emissions, and Water Usage

The following sections describe the typical waste streams and water requirements associated with each unit process in an oil-fired steam electric plant, as indicated in the literature. The waste streams and water requirements are organized according to the six unit processes described above: fuel management, steam production, steam expansion, steam condensation, electricity generation, and miscellaneous operations. When the waste streams or water requirements are associated with more than one unit process, they have been categorized in the process in which they are first generated or are most significant. The streams are illustrated in Figure 2, "Generalized Waste and Water Diagram for a Typical Oil-Fired Steam Electric Power Plant."

2.3.1 Fuel Management

The fuel management unit process includes the transport, storage, and handling of fuel oil. Oil spills during this operation can result in significant power plant waste streams and water consumption. Spillage and subsequent washdown can contaminate the plant drainage system and consume large volumes of water.

Conventional power plants get their energy typically from:

A) Fuel oil
B) Gas
C) Coal
D) Nuclear
E) Geothermal

Fossil fuel combustion products can be a significant fuel management waste. Fossil fuel combustion results in gaseous products, called flue gas, and non-gaseous, non-combustible residues called ash. A portion of the ash is carried along with the flue gas. This portion is called fly ash. The remainder of the ash settles to the bottom of the furnace and is called bottom ash. The amount and characteristics of each type of ash produced depends on the type of fuel and boiler. Coal produces a relatively large amount of both ashes, while oil produces little bottom ash but more fly ash, and gas produces little of either ash.

Ash contains the non-combustible constituents of the fuel, many of which may be toxic. For example, fuel oil fly ash may contain vanadium and other noncombustible and potentially toxic chemicals that may have been in the oil. Fly ash is typically removed from flue gas by means of mechanical dust collectors or electrostatic precipitators. If the fly ash is to be used in the manufacture of pozzolanic material or another commercial use, it is generally collected dry and handled with an air conveyor. If it is to be disposed of in an ash pond or settling basin, it is sluiced hydraulically.

Scrubbers are typically installed on plants burning fuel containing sulfur to remove sulfur oxide emissions, as well as fly ash, from the flue gas. Sulfur oxides are harmful when released to the atmosphere because they can cause lake acidification when dissolved in rainwater and can cause human respiratory problems. Scrubber sludges are typically dewatered, fixated, and landfilled.

Nitric oxide and nitrogen dioxide, or NO_x, are also air pollutants that may be present in the flue gas. NO_x is formed during combustion in three ways: the nitrogen content of the fuel is oxidized; the nitrogen content of the air is oxidized at high temperature; and intermediate hydrocarbons present in the combustion flames are oxidized. As a pollutant, NO_x is thought to be harmful as a contributor to so-called acid rain and as a greenhouse gas. At low elevations, nitric oxide also reacts with sunlight to create smog. NO_x is typically removed from the flue gas by improving combustion time and temperature control techniques.

2.2.3 Steam Production

Combustion efficiency depends largely on the cleanliness of the boiler heat transfer surfaces. Cleaning of this equipment usually requires strong chemicals to remove fuel residues and metal oxides and scales formed on these surfaces. The cleaning is not successful unless the surfaces are cleaned to bare metal, and this means that some metal (such as copper or iron) must be dissolved in the cleaning solution. The chemicals used

for cleaning are typically acids, alkalis, and chelating compounds. The cleaning agents and dissolved metals typically are collected and treated to remove metals.

Power plants are usually designed to recycle condensed steam for boiler feedwater as a means of conserving water. Efficient plant operation requires boiler feedwater to be highly pure. However, dissolved solids concentrate in the recycled condensate as a result of evaporative water loss. To maintain total dissolved solids below allowable limits for boiler operation, a controlled amount is sometimes bled off. This volume, called boiler blowdown, is treated as wastewater and must be replaced with high purity make-up water.

Water treatment for make-up water has typically included suspended solids and hardness removal, scale and corrosion control, and demineralization. Suspended solids removal usually requires such operations as clarification and filtration. Hardness removal is typically accomplished by lime-soda softening, which requires the addition of lime and caustic soda. Ammonia and phosphate are typically added for corrosion control. Demineralization usually involves ion exchange and membrane processes, such as reverse osmosis. Residues of all of these processes may flow to the wastewater treatment system along with the rejected brine water. The treatment sludges are typically landfilled.

2.3.3 Steam Expansion

There are no major chemical effluents or water use requirements associated with the steam expansion process. However, the significance of the process lies in its effect on plant efficiency and, therefore, on the thermal discharge. When a water-steam cycle is used to convert steam heat to the mechanical work of the turbines, the maximum theoretical efficiency that can be obtained is limited by the difference in temperatures at which the heat can be absorbed by the steam and discarded after passing through the turbines. Thus to achieve any degree of power plant efficiency, it is inevitable that heat must be discharged from the plant to some compartment of the environment.

Heat discharged to the environment can be a pollutant due to its potentially negative effect on ecosystems, particularly aquatic ecosystems. Temperature determines those species that may be present in an ecosystem. It activates the hatching of young, regulates their activity, and stimulates or suppresses their growth and development. Temperature also attracts organisms, and may kill them when the water becomes too hot or becomes chilled too suddenly. Warmer water generally accelerates activity and may be a primary cause of aquatic plant nuisances when other environmental factors are suitable. Therefore, thermal discharge is a significant pollutant when heat is transferred to water, as in water cooled condensers which are described in the following section.

2.3.4 Steam Condensation

Condensers and cooling towers are key equipment in the power plant's circulating water system. The steam condensation process can produce significant water demands and wastes if water cooled condensation is employed. Air cooled condensers do not require water or generate wastewater, but have a very low cooling efficiency. A water cooled

system is illustrated in Figure 2.

The two most common types of water cooled systems are once-through and closed-loop, the main difference being that once-through systems consume more water than do closed-loop systems. Once-through systems take cooling water from a natural source, pump it through the condenser, and discharge the heated cooling water to the same body of water from which it was drawn. The water temperature rise can be a disruptive pollutant to the ecosystem of the water body.

In addition to thermal pollution, once-through systems may also pollute receiving waters with chemical residue. Chemicals may be added to the cooling water before it enters the condenser to prevent or minimize scaling, corrosion, and fouling in the condenser pipes. Chemicals added typically include phosphate, lime, chromium, aluminum, and zinc. It is also common practice to add some type of biocide, including chlorine, to the water to control the growth of slimes. Residues of these chemicals will be discharged from the condenser with the cooling water.

If sufficient water for a once-through system is not available, cooling water must be recirculated within the plant in a closed-loop condenser. Closed-loop water cooled condenser systems employ some form of cooling device, such as an artificial pond or a cooling tower, as an intermediate device to transfer waste heat to the atmosphere. The relatively cool water can then be recirculated in the condensers.

In addition to increased water conservation, closed-loop systems also effectively eliminate the problem of thermal pollution to aquatic ecosystems since they transfer waste heat to the atmosphere instead of to a water body. Closed-loop condenser systems include mechanical draft, natural draft, and fan-assisted natural draft wet and dry cooling towers, cooling ponds, and spray ponds.

Although closed-loop systems do not require as great a quantity of feedwater as do once-through systems, they are not completely "closed." A make-up water system is required to replace the circulating water lost through blowdown, evaporation, liquid carryover (drift), and leakage. Circulating water blowdown is required periodically for demineralization, as is boiler feedwater blowdown, even though circulating water is not required to be of as high of purity as is boiler feedwater. Like the once-through system cooling water discharge, the blowdown may contain water treatment chemical residues. The blowdown is typically treated as wastewater.

Cooling towers are installed to avoid thermal pollution of natural bodies of water, or to assure adequate cooling in "water short" areas. The three types of towers are: wet (evaporative), dry and combination wet/dry designs. Wet towers, the usual choice, are further divided into natural-draft and mechanical draft. Dry cooling towers have attracted attention lately, especially in "water-short" locations like Jordan. They are less expensive to maintain than wet towers, which require chemical additives and periodic cleaning because of the presence of water. In contrast to conventional cooling, the air-cooled condenser has no plume or blowdown. Also, rising activity in cogeneration has sparked

interest in dry cooling. Cogeneration plants often tap the thermal energy, usually in the form of steam, at an already existing facility. Finally, use of dry cooling permits plant sitting without regard for large supplies of cooling water. The disadvantage with dry cooling though is the decrease in thermal efficiency relative to the wet cooling.

Cooling towers have become a staple of plant operation in place of once-through cooling. Zero discharge is the next phase, which means tower blowdowns will be cleaned and the water reused; an expense that makes wet/dry and dry towers more attractive than wet ones.

2.3.5 Electricity Generation

Mechanical energy is converted to electric energy at almost 100% efficiency, and, therefore, produces an insignificant amount of waste heat. No other waste streams or water requirements are attributed to this unit process. .

2.3.6 Water Treatment

Underlying most turbine corrosion problems are effects that tend to concentrate impurities. Therefore, impurity levels in feedwater and steam must be kept down to a few ppb. Control of impurity sources, compatible system design and materials, adequate treatment to remove impurities and proper sampling and chemical analysis are essential to corrosion control. There is general agreement that monitoring and analysis should be done at many points of the water/steam cycle and that impurities must be limited to a few ppb. Water treatment will include adding chemicals such as phosphates and caustic to give better alkalinity control. The most important water treatment of course is the removal of impurities with ion exchange, media filtration and reverse osmosis.

2.3.7 Miscellaneous Operations

Miscellaneous operation waste streams and water requirements are primarily those generated from sanitary, laboratory, housekeeping and construction operations. The wastewaters, which include floor drain and sump discharge, rainfall runoff, and spills and leaks, are discharged to the sewer. The solid wastes, like most plant wastes, are typically disposed of in a landfill or ponding operation.

3.0 THERMAL ELECTRIC POWER PLANT IN JORDAN

The Al Hussein Thermal Power Station (HTPS), owned and operated by the Jordan Electricity Authority, is the largest power plant in Jordan. This facility is the focus of the thermal electric power plant audit. The information assembled in this section is limited to that available to Harza in Chapter 19 of the COWIconsult and Royal Scientific Society manual titled Industrial Pollution Control Project, Jordan, Project Component No. 2: Industrial Wastewater Pretreatment Requirements.

HTPS was constructed and upgraded during the years 1973 to 1984. The plant has four fuel oil-fired burners with a total rated capacity of 363 MW plus four standby diesel turbines with a total capacity of 32 MW. The plant is located immediately southeast of the town of El Hashimiya, which is three km northeast of Zarqa. The plant is less than one km east of the Jordan Petroleum Refinery and 6 km southwest of the As Samra Wastewater Treatment Plant. The surrounding area is densely populated.

A plan of the HTPS site showing the main production facilities, oil storage facilities, and buildings is provided as Figure 3. A schematic of the facility's steam cycle is shown in Figure 4, and the water cycle is shown in Figure 5. A significant way that these schematics differ from Figure 2, the waste and water schematic for a typical plant, is that they do not include a water cooled condenser system. Instead, to conserve scarce water, the HTPS condensers are air cooled, dry systems.

Raw water for the plant is drawn from five deep wells at a combined rate of 100 cubic meters per hour. The water is used as a coolant for bearings and other equipment, as boiler feedwater, and for various plant services, including water supply for the HTPS housing estate. The water used to cool equipment is recirculated through a cooling tower.

The raw water is highly saline: an average of 2,200 mg/l total dissolved solids, and increasing over time as the water table drops. To be purified for use as boiler feedwater the water is treated in a two-stage reverse osmosis plant and in an ion exchange plant. The reverse osmosis reject water and the ion exchange regeneration water are discharged to the facility process wastewater treatment plant. All other process wastewater, such as cooling tower blowdown, is discharged to the treatment plant as well. In addition to being saline, the process water contains oil residues, usually from leaking lubricating oil, spilled fuel oil and leaking fuel oil.

The process wastewater treatment plant basically consists of an equalization tank and an oil separator. The effluent either goes to the sewer connected to the As Samra Wastewater Treatment Plant or, generally during the dry season, to irrigation of trees in a green area outside the power plant. Following treatment in a septic tank, sanitary wastewater effluent is also discharged to the sewer or to irrigation.

The wastewater effluent parameters do not exceed sewer system limits, but often do exceed irrigation standards, particularly in regards to salinity (2000 mg/l). The two primary sources of salinity in the plant wastewater are the raw water salinity and the ion exchange plant chemicals: about 1,100 kilograms of hydrochloric acid and sodium hydroxide are used daily for regeneration

of the ion exchange units.

HTPS may be modified in the future to separate the reverse osmosis unit, ion exchange unit, and cooling tower blowdown saline streams. These saline streams may instead be pumped to a brine deep-well injection pumping station. Also, the capacity of the reverse osmosis plant may be increased to reduce the use of the ion exchange unit. The consumption of hydrochloric acid and sodium hydroxide would, therefore, be reduced significantly.

The plant had experienced excessive soot formation in the flue gas, apparently due to a combination of inefficient combustion and the use of fuel oil with a high ash and sulfur content. After introduction of a fuel additive containing manganese oxide, most soot problems appear to have been solved. However, high sulfur emissions does remain a serious air pollution problem. This sulfur as $S0_2$ is not only an odor problem, but a health and environmental problem as well.

No other information regarding the HTPS was available to Harza at the time this report was written. For example, Harza does not have documented information on HTPS oil storage, plant spills and leaks, floor drain discharges, storm water runoff, ash sluice water, or flue gas scrubber wastes.

4.0 AREAS FOR POTENTIAL IMPROVEMENT

Beyond assembling background information regarding thermal electric power plants, the primary purpose of this document is to present information gathered from the literature search regarding the latest advances in pollution prevention, waste minimization (mainly for water), and water conservation.

The subjects can be defined as follows:

> Pollution prevention and waste minimization (PP/WM): reducing the volume or concentration of air, water, and solid waste discharges from a facility. PP/WM can be accomplished by implementing process improvements to actually reduce the amount of wastes generated or by developing a beneficial reuse for the waste and transforming it into a marketable by-product.
>
> Water conservation: reducing the process, clean-up, and domestic water use requirements of a facility.

The PP/WM has been defined in general. The focus of this project will be on water, but, air and solid wastes will be mentioned secondarily. The PP/WM will include source reduction, in-process recycling, clean technology, raw material substitution and preventative maintenance. The following sections present state-of-the-art techniques identified as areas for potential improvement at the Al Hussein Thermal Power Station. The improvements have been categorized in the following sections according to their goal: PP/WM or water conservation. In cases where an improvement may accomplish more than one goal, it is listed in the category in which it would be expected to have the greatest impact.

Because the focus of this report is on state-of-the-art technology, information regarding the more mature technologies have been omitted which are typically standard at power plants, i.e. electrostatic precipitators to reduce air emissions. Also, the areas for improvement listed are only suggestions for a typical oil-fired plant; their applicability and net benefit to the Al Hussein Thermal Power Station depends on plant specific factors.

4.1 Pollution Prevention/Waste Minimization

All state-of-the-art PP/WM opportunities identified in the literature for oil-fired power plants apply primarily to the fuel management process, particularly to the reduction of NO_x air emissions. However, techniques that apply to water treatment systems and general facility operations have also been documented.

4.1.1 Water Treatment Wastes

Ozonation and the reuse and/or improvement of ion-exchange resins are two state-of-the-art techniques for minimizing water treatment wastes that have been documented in the literature.

Ozonation: The use of ozone as a sole treatment for water is emerging as a reliable alternative to traditional multi-chemical treatment methods because it; (A) effectively controls scale, corrosion, and biogrowth, (B) conserves water, and (C) eliminates the use, storage, and discharge of otherwise necessary treatment chemicals. Ozonation is, however, energy intensive.

An allotrope of oxygen, ozone is the strongest commercially available oxidizing agent. Unlike chlorination, ozonation produces no residual. Instead, ozone has a very short half-life in water (measured in minutes), with simple O_2 as its decomposition product. Ozone is not stored for later use; it is immediately injected into the treated water as it is produced on-site by an ozone generator. The raw materials needed for generating ozone are air and electrical energy.

Ion-Exchange: The disposal of ion-exchange resins used for process water demineralization is a growing concern. However, because spent ion-exchange resins typically retain at least half their original capacity, they can be reused in applications other than demineralization.

For example, the resins can be beneficially applied to soil. Adding spent ion-exchange resins to soil improves its cation-exchange capacity, thus enhancing the soil's ability to retain fertilizer. The benefits are magnified during periods of rain and irrigation. At these times, soil nutrients are lost through leaching into groundwater and through runoff. Because soils have little or no natural ion exchange capacity, these losses can be excessive. Plants are unable to absorb nutrients as fast as they leach from the soil. Farmers, in turn, add more fertilizer to replace that lost to runoff or leaching. Adding spent ion exchange resins to cultivated soil helps overcome this cycle of waste. The resins act like a huge sponge that can retain nutrients until they are needed by the plants. However, it must be noted that these highly cross-linked-polymer resins are essentially non-biodegradable.

Sybron Chemicals of Birmingham, New Jersey, has developed a series of ion-exchange resins designed to improve water demineralization system performance and reduce chemical waste. The resins are characterized by excellent physical strength as well as high capacity and regeneration efficiency.

Techniques for Wastewater Treatment: The cooling water waste and contaminated process water wastes can be treated by many different methods:

- Isolate and separately treat waste streams, i.e. oily water from clean brines and domestic wastes.
- Reuse treated irrigation water in the processes.
- Direct reverse osmosis and ion exchange and filtration backwash for separate treatment.
- Treat and reuse condensates.
- Evaluate use of Wadi water as non-contact, one pass cooling water.
- Minimize washdown water usage and detergent additives.

- Consider treating domestic waste onsite and using the water discharge in the process.
- Evaluate recycling the reverse osmosis reject and ion exchange regeneration effluents.
- Perform filtration and reverse osmosis in stages to enable reuse in process.
- Deep-well inject brines which are too costly treat further.
- Reuse water from the equalization oil separator.
- Catch stormwater, treat for oil and solids removal and reuse as boiler water feed.

The actual waste-water treatments can be summarized as filtration (media and reverse osmosis), oil skimming, sewage treatment, flow control, deep-well injection.

4.1.2 Flue Gas Desulfurization System Wastes

The simplest way to reduce sulfur oxide emissions is to burn fuel containing relatively less sulfur; Middle Eastern crudes are relatively low in sulfur in their original state. Beyond that, sulfur oxide emissions are typically reduced in a flue gas desulfurization system. Because a significant amount of wastes can be generated in that process, magnesium-enhanced scrubbing, dry scrubbing, and selective catalytic reduction are emerging as alternatives to lime scrubbing.

Lime/Limestone Scrubber Systems: The typical flue gas desulfurization system is a lime or limestone slurry scrubber with a supplementary sludge disposal system. In the scrubber, the sulfur dioxide reacts with the lime or limestone and forms sulfite or sulfate solids that remain in solution or suspended in the slurry. The solids are separated from the slurry in conventional sludge settling tanks, and the liquid containing some suspended solids is enriched by adding more lime or limestone and is then recirculated. The sulfite gel may be stored in basins or ponds, or it may be converted to a sulfate solid, called gypsum, by oxidizing in aeration tanks.

Some lime and limestone scrubber wastes can be reused: gypsum can be used in the building and agricultural trades unless it is contaminated by other compounds or substances, in which case it is landfilled. Also, lime-based reagent can be added to scrubber sludge and fly ash in a pozzolanic stabilization reaction process to create a mineral product suitable for roadway base course.

Magnesium-Enhanced-Lime Scrubber Systems: Magnesium-enhanced lime scrubbing is replacing typical lime scrubbers at many plants. It is perhaps considered the most efficient commercial process available. In this process the presence of magnesium oxide increases the absorption capacity of the slurry by 10 to 15 times that of a limestone slurry. The principal advantage of this process is that sulfur dioxide removal is governed by the degree of gas/liquid contact in the absorber, not on solids dissolution, as it is with limestone systems. Thus, sulfur dioxide removal efficiencies of at least 98% can be achieved with significantly less liquid waste. In addition, compounds are available that can be added to magnesium-enhanced-lime scrubbers that accomplish NO_x removal as well as sulfur dioxide removal. The principal disadvantage of this process is that magnesium-enhanced lime is an expensive reagent.

Dry Scrubber Systems: The concept of dry scrubbing to remove sulfur dioxide from flue gas has been gaining acceptance. In dry scrubbers, liquid slurry drops containing very little water are sprayed into a hot gas stream. The liquid evaporates as chemical reactions and absorption of sulfur dioxide takes place in reactions similar to those in wet scrubbers. The solid particles can be collected with fly ash in the precipitator or baghouse. The advantages of dry scrubbers over wet scrubbers are that a dry powder is produced, avoiding disposal of a liquid slurry or wet sludge and much less water is required.

Selective Catalytic Reduction Systems: Selective Catalytic Reduction (SCR), although typically applied for NO_x removal, can also be used successfully for sulfur dioxide waste minimization. A system in Denmark is demonstrating not only 94% removal of NO_x, but also 95% removal of sulfur dioxide and the production of a projected 25,000 tons of commercial-grade sulfuric acid. No water is consumed, nor are other residual waste materials generated. It is believed to be the largest flue gas treatment process with by-product recovery operating worldwide.

The Denmark process is derived from sulfuric-acid production technology. Following the existing electrostatic precipitator, flue gas passes a fabric filter to ensure that the gas is free of fly ash. The gas temperature is raised to 750° Fahrenheit using process heat. Ammonia is injected into the flue gas upstream of a conventional SCR unit. The flue gas proceeds to a sulfur dioxide-to-sulfur trioxide catalytic converter coupled to a novel acid condensing unit. In the condensing unit, the acid-laden flue gas condenses inside 50,000 glass tubes. In addition to high removal efficiency, the process consumes only 0.5% of station power output.

Another type of SCR which can remove over 80% NO_x and 95% $S0_2$, uses zeolite to absorb the $S0_2$ and NO_x. After capturing the contaminant gases, zeolite is regenerated and reused.

4.1.3 NO_x Emissions

The basic tools for reducing NO_x emissions have not changed much in the past twenty years, but the manner in which they are being applied has. Categories of NO_x PP/WM options receiving the most attention in the literature include combustion modifications and postcombustion control devices, such as selective catalytic reduction and selective noncatalytic reduction systems. Computerized systems for total plant process control can also be effective methods of PP/WM.

Combustion Modifications: Control of nitrogen oxide emissions from combustion processes provides a good example of air pollution control by reducing the amount of pollutant produced. Reducing the formation of NO_x depends on carefully controlling the combustion temperature and fuel-air mixture in various parts of the flame.

Ideally, combustion takes place in two stages. During the first stage, the oxygen supply is limited so that the fuel is pyrolyzed and releases nitrogen in its innocuous molecular form. In a second, oxygen-rich stage, combustion of the remaining fuel is completed.

However, creating such staged combustion is tricky. U.S. utility applications of oil-fired low NO_x burners typically experience difficulties in achieving predicted NO_x reductions without excessive carbon monoxide emissions.

However, researchers at the Massachusetts Institute of Technology (MIT) have discovered a novel way to improve low NO_x burners. In laboratory tests the MIT scientists have been able to reduce NO_x emissions to about 15% of uncontrolled levels. This success is based on elongating the flame by swirling air around it. A longer flame promotes fuel pyrolysis and delays fuel combustion. Commercialization of the burner, which can be used to burn oil, is expected in late 1995.

It is important to note that any air in-leakage, which can be significant at older boilers, can quickly negate low-NO_x retrofit gains.

Postcombustion Controls: Selective catalytic reduction (SCR) and selective noncatalytic reduction (SNCR) are two types of postcombustion NO_x controls. Technology demonstrations have yielded mixed results. Pilot SCR demonstrations in oil-fired units indicated greater than 80% NO_x removal; however, several of the catalysts tested were plugged by premature activity decay and fly ash binding. Full-scale SNCR applications have achieved as much as 50% NO_x reductions in some instances and only up to 30% in others.

The basic objective of the SCR process is to use ammonia as a reagent and reduce NO_x to water and elemental nitrogen. Because the pertinent reactions normally proceed at temperatures greater than 1900° Fahrenheit, a catalyst is used to promote the reactions at lower temperatures. SCR systems are fixed bed reactors with catalyst formulations extruded into parallel plate or honeycomb arrangements. The primary design objective is to maximize exposure of the catalyst surface to the gas flow. SCR is considered the most effective method of post-combustion NO_x control when high removal efficiencies are required.

New catalyst formulations and fabrication techniques have extended the temperature range of the SCR process and make them more resistant to decay and ash binding. Aluminum oxide serves as the primary catalyst in many older SCR systems. Today, other basic compounds in catalyst formations are vanadium pentoxide and titanium dioxide and, to a much lesser extent, tungsten trioxide and silicon dioxide. Zeolites are another class of compound that are being introduced into SCR systems. A zeolite is a porous, complex crystalline solid generally made up of oxides of aluminum and silicon combined with alkali and alkali earth metals.

Catalysts, by definition, are not consumed in catalytic reaction. In theory, they can last forever when properly selected, designed, and applied. In practice, many compounds in flue gas and fly ash have been found to poison catalysts. Nevertheless, catalysts are guaranteed for a specific life, sometimes up to ten years.

SNCR is a generic label that refers to several distinct processes. It is a relatively simple though highly sensitive operation. The processes involve injection of urea, ammonium hydroxide, anhydrous ammonia, or aqueous ammonia into the furnace within the appropriate temperature window to reduce NO_x to N_2 and water. Urea dissociates quickly in the furnace to ammonia. A potential problem with SNCR is that some of the NO is converted into N_2O, a so-called greenhouse gas.

The distinction between SCR and SNCR is blurring: catalyst is being placed wherever it can fit and ammonia, urea, or other reagents are being injected in multiple locations to meet process requirements.

A potential drawback to SCR and SNCR systems is that although they reduce the NO_x air emission waste stream, they create other waste streams. Spent catalyst: disposal often presents hazardous waste concerns. Several catalyst suppliers offer catalyst recycling and disposal services. Zeolite catalysts are attractive in this respect since they contain less metals than do traditional catalysts. Additionally, the use of SCR and SNCR processes may require additional plant wastewater treatment for ammonia compounds: ammonia or urea injection may result in residual ammonia finding its way into the wastewater stream continuously, or in ammonium compounds intermittently washed from component surfaces and requiring batch treatment.

Computerized Process Control: Controlling NO_x emissions has emerged as an area in which advanced process control has become desirable, and almost necessary. Organizations like the Electric Power Research Institute (EPRI) have recognized that software can help plant operators balance heat rate with emissions. EPRI is combining individual software programs developed to help plant operators control fuel quality, heat rate, sulfur dioxide and NO_x emissions, and solid waste into one package called Advisory Plant and Environmental Control System. The package intends to automatically compute the control systems' set points needed to achieve environmental dispatch. Similar programs have enabled plants to reduce NO_x emissions an additional 27% beyond what standard pollution controls had accomplished. Ultimately, the goal is to have the system predict and optimize the process set points continuously in real time and automatically regulate flows, temperatures, and pressures.

Computerized process control can be used for wastewater control as well if continuous readout monitoring can be successfully installed on wastewater streams. This is usually not done, but is a good process control as well as waste control.

4.1.4 Fly Ash

Although the most common ash disposal methods are ponding and landfilling, partial utilization of ash as fill for roads, runways, and construction sites, and as cement and brick admixtures, has become more commonly practiced. Some possible fly ash applications are:

- Utilization as a Portland cement admixture or partial replacement.
- Utilization as a light aggregate for producing lightweight concrete blocks and structural lightweight concrete.
- Utilization as road bed material, loose aggregate, soil stabilizer, clean fill, or soil nutrient.
- Recovery of the metallic components of fly ash, such as aluminum, vanadium, titanium, and iron.
- Production of mineral wool.

4.1.5 Odor Problems

Odor problems in a power plant usually result from fuel burning. Cleanup of sulfur dioxide, nitrous oxides, and volatile organic carbon stack emissions usually eliminates the problem. Occasionally, the cooling tower can grow odor-causing bacteria, which, can be controlled with ozone treatment or chlorination. Another method to reduce power plant odors is to switch fuels to natural gas. Finally, odors may originate from solid waste not properly handled and disposed.

4.1.6 General PP/WM Techniques

Several general techniques for reducing or eliminating facility wastes, particularly hazardous wastes are identified in the literature. The techniques range from simple material handling changes to the installation of new equipment and training of personnel. Noted techniques include:

- Recovery of spent solvent.
- Recycle of cardboard, plastic, paper, glass, motor oil, metals, and other materials.
- Replacement of disposable items with reusable items.
- Routine inspection and maintenance of valves, pipe joints, pumps, tanks, etc., to prevent waste generation due to leaks and spills and to lengthen equipment life.
- Utilization of seal-less pumps.
- Maximization of welded pipe joints.
- Utilization of oil-absorbent pads to reclaim both the pads and used oil, instead of using granulated absorbents.
- Installation of spill basins or dikes in storage areas.
- Installation of splash guards and drip boards on tanks and faucets.
- Installation of overflow control devices on process and storage tanks.
- Utilization of trained and qualified personnel to maintain optimum operating conditions.
- Water usage optimization.

As an example, the Los Angeles Department of Water & Power was able to generate 70% less hazardous solvent waste than it had in 1990 by making general process changes. Specifically, the Department minimized its waste by successfully employing nonhazardous

solvents as substitutes for hazardous solvents used for parts cleaning. The usual solvents are typically chlorinated or otherwise hazardous solvents. Part of this reduction was accomplished through solvent recycling, but the bulk of it resulted from a switch to nonhazardous solvents, primarily citrus-based.

Finally, computer software is available to assist power plants implement a waste minimization program. For example, one soon-to-be-released tool developed by EPRI is a software program that will help utilities determine the volume of particular wastes that they generate. The program-Accounting Software Application for Pollution Prevention-tracks the origin and destination of various waste streams and monitors the costs involved. The process is similar to financial accounting, only the software user is counting not only dollars but also pounds of waste.

4.2 Water Conservation

Where water is scarce, water conservation is a necessity. Water conservation improvements identified in the literature apply to flue gas desulfurization systems, and blowdown systems, water treatment systems, and alternative water sources. Also, as with PP/WM, water conservation can be realized through general process improvements.

4.2.1 Flue Gas Desulfurization System Water Conservation

Flue gas emissions control devices, particularly wet lime and limestone scrubbers, are large consumers of water. However, because they do not require high purity water, they can receive low-quality water recycled from, for example, cooling tower blowdown; this low-quality water is otherwise typically considered wastewater.

Another method to conserve water in the flue gas desulfurization system is being developed by the Consolidated Edison Company of New York. The company plans to demonstrate a unique process that has the potential to recover both waste and energy, in addition to removing such compounds as air toxics and fine particulates from flue gas emissions. The process will use condensing heat exchangers for flue gas treatment and could be adapted for removal of significant quantities of sulfur dioxide as well.

Finally, use of low-sulfur fuel oil will eliminate the need to even treat the emissions, thereby conserving the treatment water.

4.2.2 Blowdown System Water Conservation

Blowdown systems have the potential for water conservation through reuse. For example, since the boiler feedwater supply has the highest water quality requirements of any system in the power plant, the boiler blowdown is generally of higher purity than the original source of supply. Thus untreated boiler blowdown can efficiently be recycled for almost any other use in the plant.

Treated cooling tower blowdown also has the potential for reuse. It has been documented to be a good source of make-up and misting water for flue gas desulfurization scrubbers and may also be used for bearing flush water and pump-seal water. Characteristically, the blowdown must go through a lime-softening process for treatment; reverse osmosis or ion exchange may also be appropriate.

Additionally, the frequency of blowdown and its associated treatment can be minimized to conserve water. However, there are upper limits at which it is not possible or practical to continue operating the boiler or cooling tower without blowdown due to excessive amounts of corrosion, scaling, and fouling due to high concentrations of certain contaminants in the recirculating water. While the levels at which it is practicable to operate can be raised by using make-up water treatment, corrosion resistant materials, and scaling, corrosion and fouling inhibitors, there are still upper bounds to the permissible cycles of water due to ion concentration.

One way to obtain the maximum cycles of water is by treatment of make-up water and recirculating it. Side stream filtration can effectively control the suspended solids level. Side stream treatment consists of treating a portion of the circulating water and returning it to the system. By-product streams, such as sludge or filter backwash, are not returned to the system and their volume must be replaced with additional make-up water. Make-up water treatment is primarily lime-soda softening.

4.2.3 Water Treatment System Water Conservation

Reverse osmosis demineralization systems have also been targeted as a means of water conservation. These systems typically divert approximately 25% of boiler feedwater flow to the drain as concentrated brine. A system has been devised by Arrowhead Industrial Water, Enron Power, and Calgon Corporation which recovers all of the reverse osmosis effluent stream for partial makeup to the cooling tower. The water that is now being pumped to the sewer and irrigation could be treated similarly, to return a high percentage of it to the process system. Irrigation water could be treated similarly, to return a high percentage of it to the system. Ultimately the brine backwash from the reverse osmosis unit could be deep-well injected (10,000-15,000 ft. deep).

4.2.4 Alternative Water Sources

One way to conserve water is to generate process water from sources that would otherwise be considered wastewater. For example, a few power plants have utilized sea water or sewage treatment plant effluent as make-up water. In this case then, the effluent from the AS Samra wastewater treatment plant would be a source of plant water.

The primary effect of sea water on power plant systems is to increase the corrosion rate of metals and concrete within the condensation system. Special construction materials, such as high-sulfate cement, are required to construct saltwater circulating water systems. Otherwise, the saline make-up water requires no special pretreatment other than screening. An additional benefit is that the utility can produce sodium hypochlorite from the sea

water by electrolysis.

Both municipal sewage effluent and on-site sanitary wastewater can be recycled for make-up water. In some instances, more advanced treatment is required to remove nitrogen and phosphorous or reduce suspended solids and BOD to very low levels. These treatment techniques supplement conventional municipal treatment of effluents with chlorination or ozonation.

The As Samara wastewater treatment plant may discharge water that is either directly useable or useable after simple treatment in the power plant. The quality of this discharge is critical. If the sewage treatment plant effluent is sufficiently low in salinity, consideration should be given to the use of the effluent as cooling water in the power plant. The water needs to be low in BOD as well so that the power plant would not need to construct its own biological treatment facility to treat the incoming sewage plant water. The possibilities of conserving the sewage treatment plant water by using it in the power plant can be evaluated in the feasibility studies in the next phase of this study.

4.2.5 General Water Conservation Techniques

General techniques for conserving facility water have been identified in the literature. Most techniques involve equipment changes, and include:

- Utilization of high-pressure/high temperature washing equipment.
- Installation of flow-control valves and timers to control process water usage.
- Measurement of water flow rates from each unit process to control water usage.
- Treatment and recycle of floor drain and sump discharges.
- Collection and use of storm water.

4.3 Conclusion

Relative to other thermal electric power plants using fuel oil in an arid environment, there appears to be some significant potential for water conservation and WM/PP at the Al Hussein Thermal Electric Power Plant.

There is significant water pumped from the plant to the sewage plant and to irrigation. Much of this wastewater could be treated by filtration, including reverse osmosis, and recycled in the plant as process water. The salty filtration and ion exchange backwash will need to be deep-well injected or disposed at the sewage treatment plant. Even the discharge from the sewage treatment plant could potentially be recycled into the plant.

Water can very likely be conserved in the power plant by good operating practices such as preventative maintenance, good housekeeping, spill prevention, controlled storm runoff, cleaning techniques using minimum water, and a good training program to ensure program success. The need for any or all of these in the Al Hussein Thermal Electric Power Plant will be evaluated with the audit.

Since water conservation is essential in Jordan, long term plans should include consideration of changing the basic steam turbine technology to either the combined system, or, gas and/or diesel driven turbines at this power plant.

Gaseous emissions of sulfur dioxide, nitrous oxides and volatile organic carbon are apparently a substantial air pollution problem. If switching to natural gas fuel is not possible, consideration needs to be given to burning only low sulfur fuel oil and installing low NO_x emissions burners and/or turbines.

Further comparison can be made during the audit since at this time the information on the Al Hussein thermal electric power plant is very limited.

5.0 REFERENCES

The following documents were reviewed to prepare this report. With the exception of references 16 and 17, the essential components of each are included as an appendix to this report under a separate cover.

1. Center for Hazardous Materials Research. "Pollution Prevention: Strategies for Fossil Fuel Electric Power Generation." Fact Sheet.

2. COWIconsult and Royal Scientific Society. Industrial Pollution Control Project, Jordan. Project Component No. 2: Industrial Wastewater Pretreatment Requirements. Chapter 19 ("Enterprise No. 11: Al Hussein Power Station"), June, 1994.

3. "Fuel Staging." Power, p. 30, May, 1993.

4. "Full-Scale SCR Retrofit is First at US Power plant." Power, p. 30, May, 1993.

5. "High-Strength Resins Reduce Chemical Waste." Power, p. 30, December, 1993.

6. Jones, Cate. "Consider SCR an Integral Part of the Combustion Process." Power, p. 32, December, 1993.

7. Kokkinos, A., *et al.* "NO_x Controls for Utility Boilers: Highlights of the EPRI July 1992 Workshop." Journal of the Air Waste Management Association, Vol. 42, No. 11, p. 1498, November 1992.

8. Lamarre, Leslie. "Digging Into Pollution Prevention." EPRI Journal, p. 6, September, 1993.

9. Livengood, C. David (Argonne National Laboratory). Information on Advances in Power Plant Emission Control Devices. Personal Communication. 1994.

10. Makanski, Jason; editor. "Amend Soils with Residues from Water-Treatment Processes." Power, September, 1993.

11. Makanski, Jason; editor. "Controlling SO_2 Emissions." Power, p. 23, March, 1993.

12. Makanski, Jason; editor. "Integrated Control Concepts Minimize Environmental Impact." Power, p. 21, August, 1993.

13. Makanski, Jason; editor. "Process Control Plays Quiet But Huge Role in CAA Compliance." Power, p. 57, January, 1994.

14. Makanski, Jason; editor. "Reducing NO_x Emissions from Today's Power Plants." Power, p. 11, May, 1993.

15. Minnesota Office of Waste Management. "Waste Source Reduction Checklist." Fact Sheet. April, 1991.

16. Nichols, Charles R. "Development Document for Effluent Limitations Guidelines and New Source Performance Standards for the Steam Electric Power Generating Point Source Category." U.S. Environmental Protection Agency, Office of Water and Hazardous Materials, Washington, D.C. 1974.

17. Senges, D.C., *et al.* "Closed-Cycle Cooling Systems for Steam-Electric Power Plants: A State-of-the-Art Manual." Mackell, Inc., Woodbury, NJ, Sponsored by U.S. Environmental Protection Agency, Industrial Environmental Research Laboratory. 1979.

18. Shreve, R. Norris and Joseph A. Brink, Jr. Chemical Process Industries, 4th Edition, p. 49-62. McGraw-Hill, Inc., New York, NY, 1977.

19. State of Michigan, Departments of Commerce and Natural Resources. "Waste Reduction Checklist." Fact Sheet.

20. Strauss, Sheldon D. "Water Treatment." Power, p. 17, June, 1993.

21. "Steam Turbines". Power. pp. S 1-560. June, 1989.

22. Tabors, Richard (Massachusetts Institute of Technology). Background Information on State-of-the-Art Steam Electric Power Plants. Personal Communication. 1994.

23. "Ultralow-NO_x Burner Based on Swirling Air." EPRI Journal, p. 5, January/February, 1994.

24. U.S. Environmental Protection Agency, Region III. "Pollution Prevention Opportunities in Fossil Fuel Electric Power Generation." Pamphlet. October, 1990.

25. "Use of RO Concentrate Conserves Plant Water." Power, p. 171, November, 1993.

FIGURES

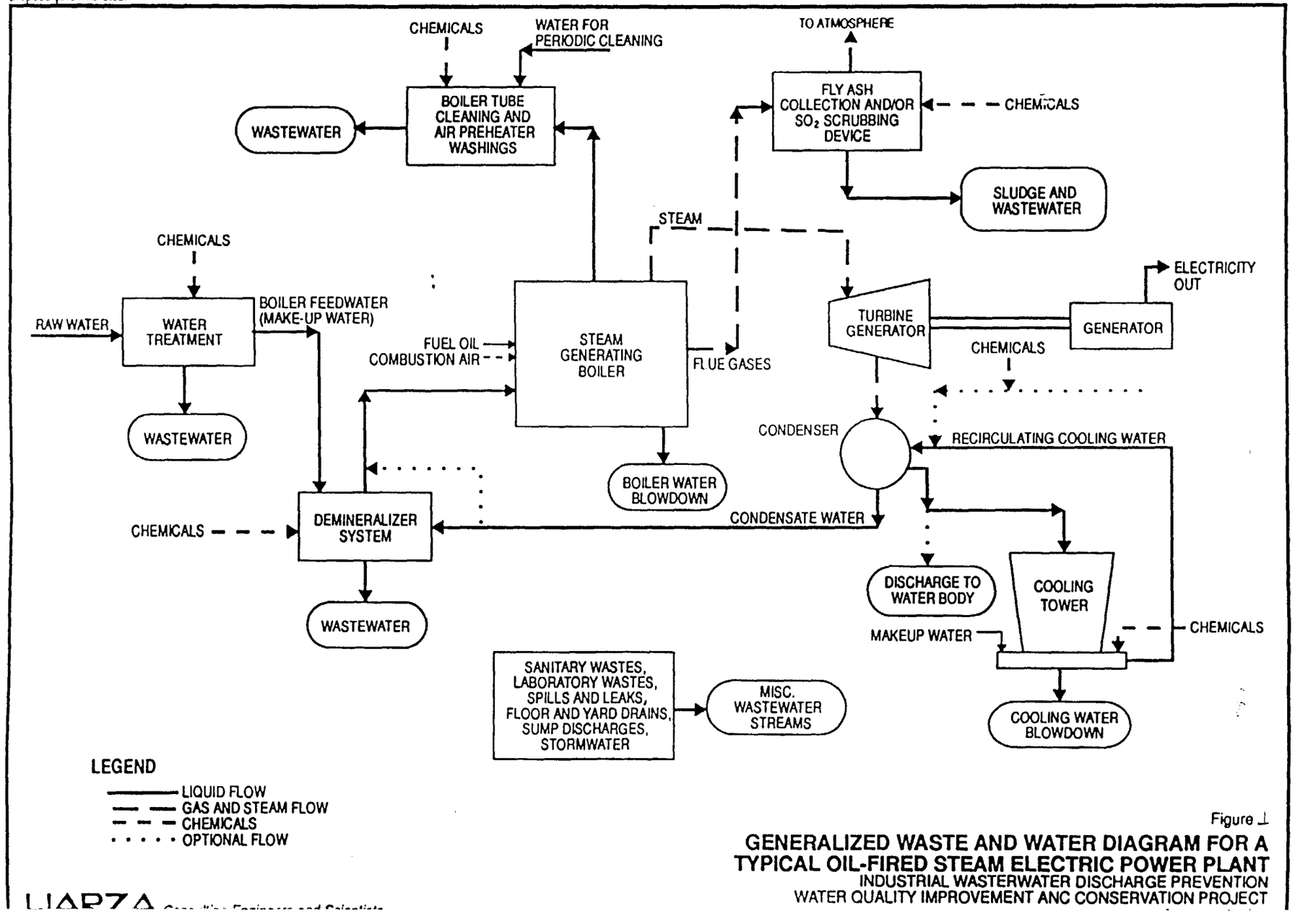

Figure 1

GENERALIZED WASTE AND WATER DIAGRAM FOR A TYPICAL OIL-FIRED STEAM ELECTRIC POWER PLANT

INDUSTRIAL WASTERWATER DISCHARGE PREVENTION
WATER QUALITY IMPROVEMENT ANC CONSERVATION PROJECT

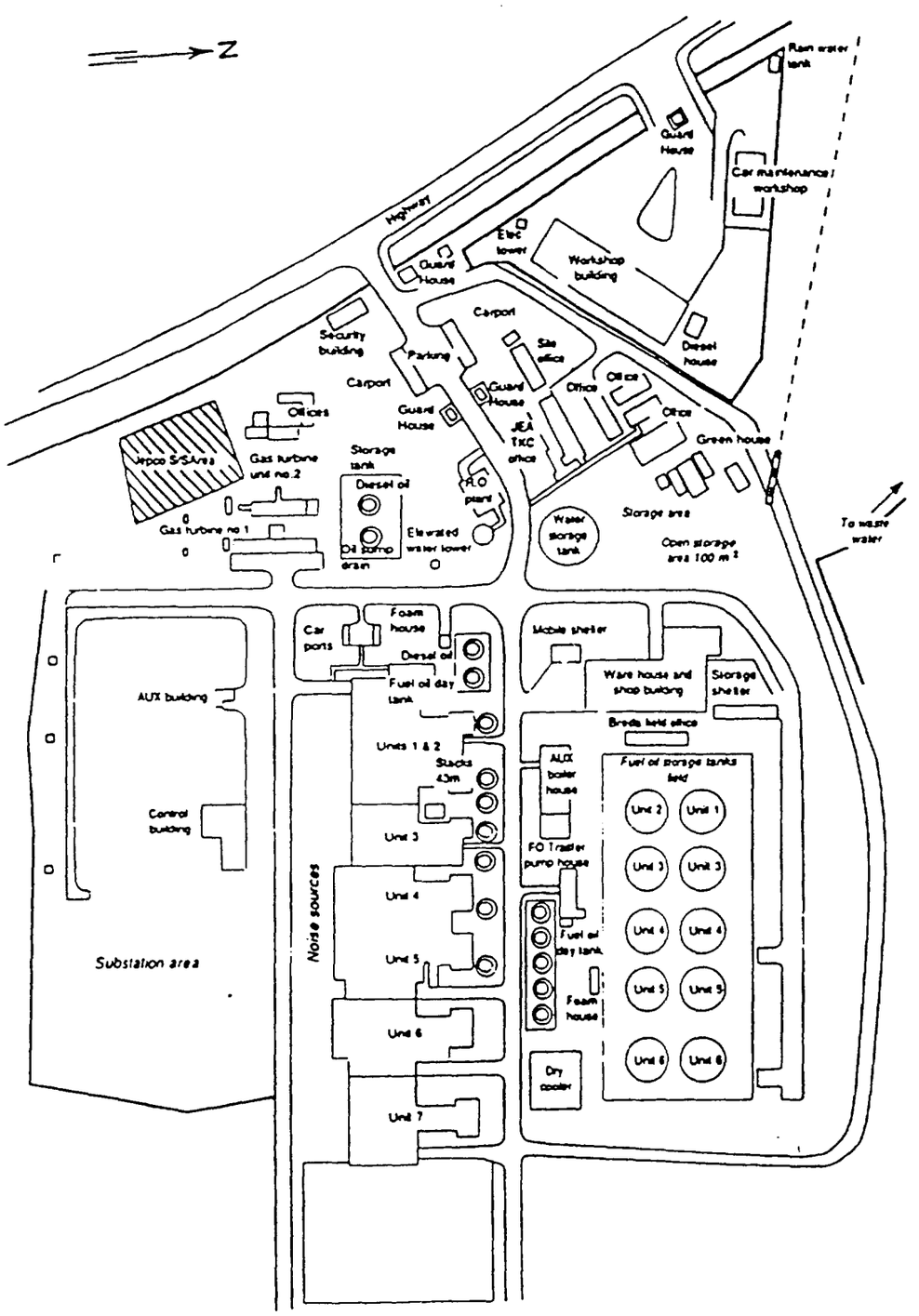

SOURCE:
Industrial Pollution Control Project, Jordan
Project Component No. 2, Chapter 19
COWIconsult and RSS

Figure 2

AL HUSEIN THERMAL POWER STATION
INDUSTRIAL WASTEWATER DISCHARGE PREVENTION
WATER QUALITY IMPROVEMENT AND CONSERVATION PROJECT
Amman, Jordan

HARZA *Consulting Engineers and Scientists*

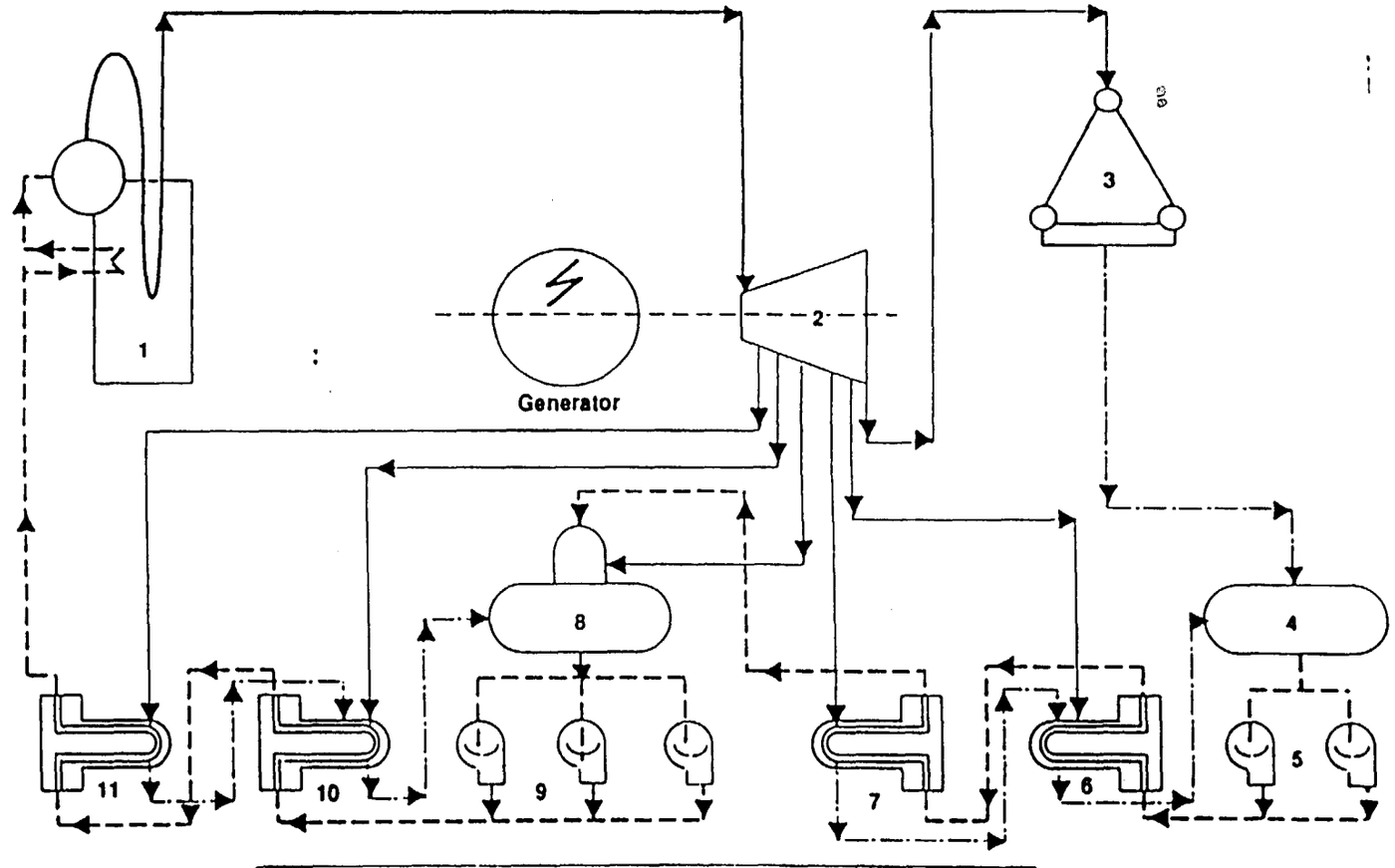

1 Boiler	7 Low pressure Heater No 4	Main Steam
2 Turbine	8 Deaerating Heater	Feed Water
3 Air Cooled Condenser	9 Feed Water Pumps	Exhaust Steam
4 Condensate return tank	10 High pressure Heater No 2	Condensate Water
5 Condensate Extraction Pumps	11 High pressure Heater No 1	
6 Low pressure Heater No 5		

SOURCE:
Industrial Pollution Control Project, Jordan
Project Component No. 2, Chapter 19
COWIconsult and RSS

Figure 3

THE STEAM CYCLE:
AL HUSEIN THERMAL POWER STATION
INDUSTRIAL WASTEWATER DISCHARGE PREVENTION
WATER QUALITY IMPROVEMENT AND CONSERVATION PROJECT
Amman, Jordan

HARZA *Consulting Engineers and Scientists*

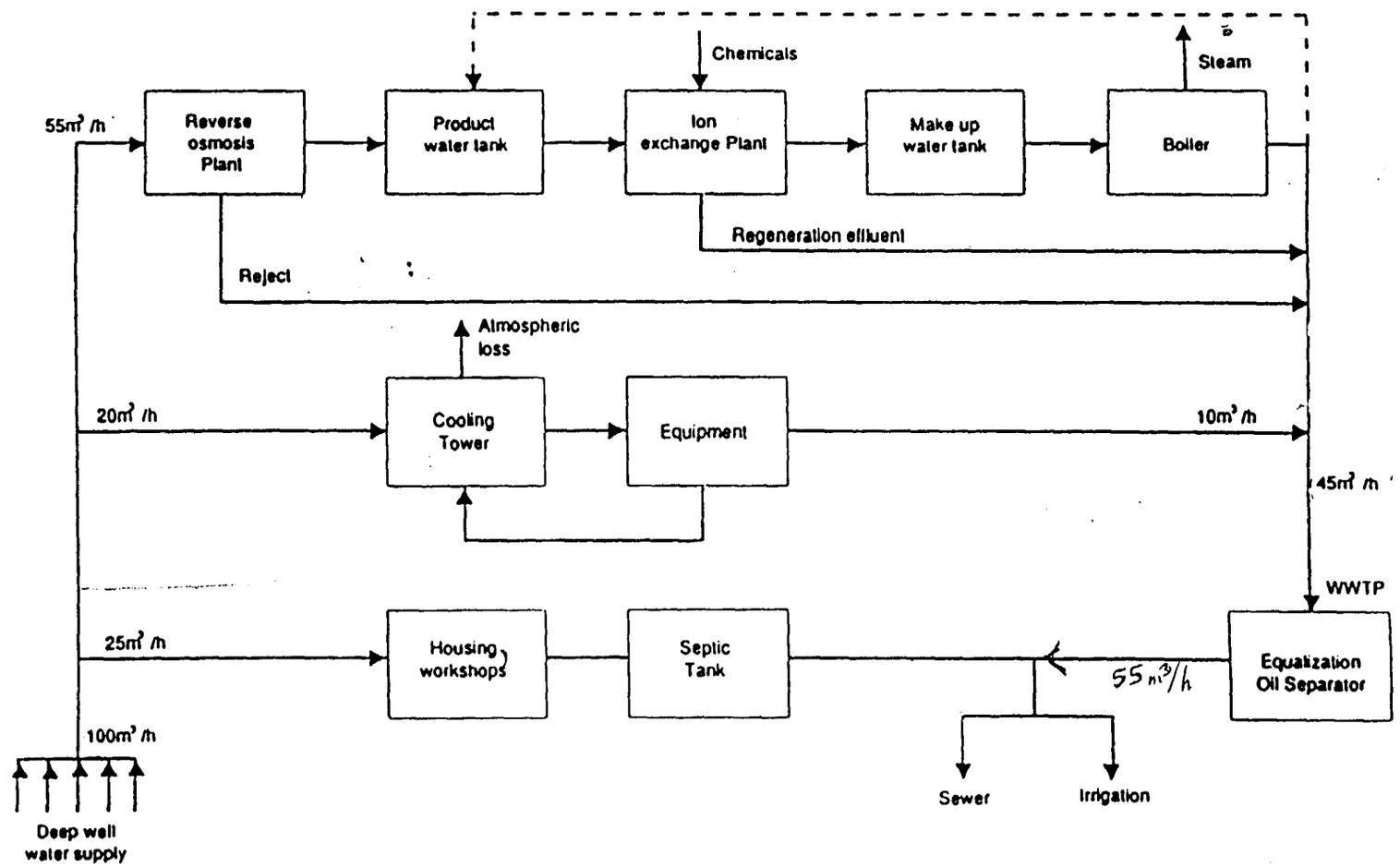

SOURCE:
Industrial Pollution Control Project, Jordan
Project Component No. 2, Chapter 19
COWIconsult and RSS

Figure 4
THE WATER CYCLE:
AL HUSEIN THERMAL POWER STATION
INDUSTRIAL WASTEWATER DISCHARGE PREVENTION
WATER QUALITY IMPROVEMENT AND CONSERVATION PROJECT

(a)

PB-240 853

DEVELOPMENT DOCUMENT FOR EFFLUENT LIMITATIONS GUIDELINES AND NEW SOURCE PERFORMANCE STANDARDS FOR THE STEAM ELECTRIC POWER GENERATING POINT SOURCE CATEGORY

ENVIRONMENTAL PROTECTION AGENCY

OCTOBER 1974

DISTRIBUTED BY:

NTIS

National Technical Information Service
U. S. DEPARTMENT OF COMMERCE

gas were burned to generate electricity, placing natural gas second among the fossil fuels and accounting for almost 30% of the energy generated from fossil fuels.

The original attractions of natural gas were its availability and its economics. For a long time natural gas was considered almost a by-product. At the same time, its use in utility powerplants resulted in simpler and less costly fuel handling, burning facilities and a marked reduction in ash handling and air pollution problems. However, the availability of natural gas has declined sharply in the last few years, and utilities are finding it increasingly difficult to conclude long-term agreements for natural gas supplied for central generating plants. The future availability of natural gas is uncertain. Present reserves of natural gas amount to an estimated twelve times our current annual production, and the annual discovery of new sources is less than the current rate of consumption.

Estimates by the FPC project a fairly stable level of natural gas consumption by the electric utility industry over the next twenty years. However, in view of the projected growth of the industry as a whole, the share of the total electricity generated is expected to decrease to 8% by 1990. This trend could be affected by several technological developments. One of these is the successful commercial application of coal gasification. Another is an AEC program to increase the yield of natural gas from underground formations by the underground explosion of nuclear devices. In the meantime, some existing plants using natural gas as a fuel were being converted to oil in spite of the advantages of natural gas in the ash and air pollution areas.

Fuel Oil

Fuel oil is presently the third most significant source of fossil fuel for generating electricity, accounting for 15% of the total generation in 1970. However, in the New England- Middle Atlantic area it accounted for 82% of the thermal generation, primarily as a result of the conversion of coal-burning plants to residual fuel oil in order to meet air pollution standards.

Three types of fuel oil are used in utility powerplants: crude oil, distillate oil, and residual oil. A key problem with the use of fuel oil, as with the use of coal, is the sulfur content. At the present time, powerplants in the Northeast are burning oil containing less than 1% sulfur by weight. Domestic supplies of low sulfur crudes are quite

limited and will not be improved significantly when Alaskan oil is available in the contiguous United States. As a result, utilities have been highly dependent on foreign sources of supply. Major foreign sources include Venezuela, and the Middle East. Venezuelan sources must be, and are, desulfurized at the source, while Middle Eastern crudes are low in sulfur in their original state.

With the future availability of petroleum products of all types in question, it appears doubtful that the recent trend toward increased burning of oil in powerplants will continue in the future. FPC projections (1970) indicated a slight increase in the percentage share of oil compared to total use of fossil fuels over the next five years, with a leveling off thereafter. The price of fuel oil, which had remained fairly constant during the early 1960's has increased in recent years, and will possibly increase further in the future.

A possible technological development which might affect the supply of fuel oil is the extraction of oil from oil shales. Certain areas of Colorado, Utah and Wyoming contain large reserves of oil shale, with unfavorable economics being the major obstruction to the development of an oil shale industry. If crude oil prices continue to escalace and oil supplies continue to dwindle, the development of this source may become economically viable.

Fuel oil use in powerplants minimizes bottom ash problems, although fly ash can continue to be troublesome. Some fuel oils also contain vanadium and may contain other unusual components which may or may not wind up in a powerplant effluent.

Refuse

Emphasis on recycling waste products has increased interest in use of another fuel - solid waste. Refuse and garbage are not confined to kitchen wastes, but include a mixture of all household wastes with commercial and industrial wastes. Large-scale inorganic industrial wastes are generally not included. The average American domestic refuse has many combustibles which raise its heating value to approximately 40% of that of coal. Incineration coupled with steam generation has been practiced for a considerable period in Europe, where household garbage as collected is mixed, especially during the winter months, with the ashes of household coal furnaces. Garbage is generally shredded and most non-combustibles are removed by magnetic and centrifugal separators before firing to the furnace.

"total cost ... in relation to effluent reduction benefit ..." For new source standards which reflect the greatest degree of effluent reduction achievable through the application of the best available demonstrated control technology, processes, operating methods, or other alternatives, the Act requires only the consideration of the cost of achieving such effluent reduction and any nonwater quality environmental impact and energy requirements.

There are two radically different types of waste produced by steam electric powerplants. The first type consists of the essentially chemical wastes which originate from different processes and operations within a plant. These wastes are highly variable from plant to plant, depending on fuel, raw water quality, processes used in the plant and other factors. Some waste streams are not directly related to individual generating units but result from auxiliary process systems such as water treatment, ash disposal, housekeeping operations, and air pollution control. However, all of these waste streams are at least in a qualitive way comparable to waste streams produced by other manufacturing operations.

The second type of waste consists of the waste heat produced by the plant and disposed to the environment through the cooling water system. As previously indicated, waste heat is an integral part of the process of producing electric energy. As long as electric energy is produced by the use of thermal energy from fuels to produce steam, waste heat will be produced, and will ultimately have to be dissipated to the environment. Under present day technology, the atmosphere is the final recipient for this heat, but water is generally used as an intermediate recipient. The choices available in the control of thermal discharges therefore in most cases are limited to accelerating the transfer of the waste heat from water to the atmosphere. There is no available means of significantly reducing the waste heat itself.

Furthermore, while the technology for affecting this transfer is available, its application is dependent on many factors not directly associated with the production process. The effectiveness of heat transfer devices is to some degree governed by atmospheric conditions. The achievement of any specific level of reduction does not follow the type of cost - effectiveness curve associated with the removal of more conventional pollutions.

The basic categorization in this report therefore is to separate consideration of the chemical wastes from the ef-

fects of thermal discharges. Within the chemical waste category, each plant is considered as a whole and sub-elements have been established according to the type of wastes produced by each plant. In the consideration of thermal discharges, each generating unit is considered separately.

Chemical Wastes

The origin and character of chemical wastes within a powerplant is dependent upon the factors indicated above. Plants utilizing different fuels will produce different wastes to the degree that certain waste streams are completely absent in plants employing one type of fuel. Coal pile runoff is not a problem in oil-fired plants, and similarly ash sluicing is not necessary in gas-fired plants. Nuclear plants have closed waste systems to contain any waste which is, or may be, radioactive. These wastes are handled in a manner prescribed by the Atomic Energy Commission, and are not relevant to the categorization of the industry for the purposes of this project. As a result, many of the waste streams present in fossil-fired plants are not normally present, or of concern in a nuclear plant.

Another factor, such as raw water quality, will determine the type of water treatment employed within a specific plant, and in turn the wastes produced from water treatment processes. Although these wastes are extremely variable, depending upon the treatment employed (clarification, softening, ion exchange, evaporation, etc.), they are wastes which are common to all powerplants regardless of fuel or other factors. Other waste streams depend upon the specific characteristics of the particular plant in question.

As a result, the industry has been categorized for chemical waste characteristics by individual waste sources. The basis of evaluation of plants in the industry will be a combination of the appropriate waste sources for a particular powerplant. Guidelines will be established for each waste source, and can then be applied and utilized in the manner of a building-block concept. Waste streams may be combined, and in many cases this would have obvious advantages, and the appropriate guidelines would then also be combined for application to the new waste stream. Subcategories have been based on distinguishing factors within groups of plants. Table IV-5 provides the informal categorization for the purposes of the development of effluent limitations guidelines and standards for chemical wastes, and Table IV-6 shows the applicability of the

TABLE IV-5
CHEMICAL WASTE CATEGORIES

I. Condenser Cooling System
   A. Once-through
   B. Recirculating

II. Water Treatment
   A. Clarification
   B. Softening
   C. Ion Exchange
   D. Evaporator
   E. Filtration
   F. Other Treatment

III. Boiler or PWR Steam Generator
   A. Blowdown

IV. Maintenance Cleaning
   A. Boiler or PWR Steam Generator Tubes
   B. Boiler Fireside
   C. Air Preheater
   D. Misc. Small Equipment
   E. Stack
   F. Cooling Tower Basin

V. Ash Handling
   A. Oil-Fired Plants
      1. fly ash
      2. bottom ash
   B. Coal-Fired Plants
      1. fly ash
      2. bottom ash

VI. Drainage
   A. Coal Pile
   B. Contaminated Floor and Yard Drains

VII. Air Pollution Control Devices
   A. SO_2 Removal

VIII. Miscellaneous Waste Streams
   A. Sanitary Wastes
   B. Plant Laboratory and Sampling Systems
   C. Intake Screen Backwash
   D. Closed Cooling Water Systems
   E. Low-Level Rad Wastes
   F. Construction Activity

TABLE IV-6
APPLICABILITY OF CHEMICAL WASTE CATEGORIES
BY TYPE OF FUEL

Process or Operation	Nuclear	Coal	Oil	Gas
I. Condenser Cooling System				
A. Once-through	X	X	X	X
B. Recirculating	X	X	X	X
II. Water Treatment				
A. Clarification	X	X	X	X
B. Softening	X	X	X	X
C. Ion Exchange	X	X	X	X
D. Evaporator	X	X	X	X
E. Filtration	X	X	X	X
F. Other Treatment	X	X	X	X
III. Boiler or Generator Blowdown	X	X	X	X
IV. Maintenance Cleaning				
A. Boiler or Generator Tubes	X	X	X	X
B. Boiler Fireside		X	X	X
C. Air Preheater		X	X	X
D. Misc. Small Equipment		X	X	X
E. Stack		X	X	
F. Cooling Tower Basin	X	X	X	X
V. Ash				
~~A. Bottom Ash~~		X		
B. Fly Ash		X	X	
VI. Drainage				
~~A. Coal Pile~~		X		
B. Floor and Yard Drains		X	X	X
VII. Air Pollution (SO_2) Control Devices		X	X	
VIII. Miscellaneous				
A. Sanitary Wastes	X	X	X	X
B. Plant Laboratory and Sampling Streams	X	X	X	X
C. Intake Screen Backwash	X	X	X	X
D. Closed Cooling Water Systems	X	X	X	X
~~E. Low-Level Rad Wastes~~	X			
F. Construction Activity	X	X	X	X

23

categories to plants utilizing the four basic fuels for producing electricity.

Thermal Discharges

The most obvious factor influencing the rejection of waste heat to navigable waterbodies is the type of condenser cooling system utilized within a plant. Powerplants which recycle cooling water through a cooling device only affect the receiving water by way of the relatively small blowdown stream from the cooling tower, pond, etc. On the other hand, plants operating with once-through cooling systems are primarily responsible for the discharge of waste heat to receiving waters. Consequently, the basic subcategorization for thermal discharge characteristics divides the generating units by type of cooling system utilized, into plants having recirculating cooling systems, or once-through cooling systems.

As indicated above, the primary factor in consideration of waste heat rejection is the generating unit in question. Therefore, subcategorization of once-through cooling systems has been made on a unit, rather than a plant basis. The evaluation of generating units to further sub-divide the industry considered in detail the various factors described in this section of the report; namely, fuel, size, age, and site characteristics and mode of operation utilized. The evaluation of these factors will be described below to provide the rationale for the subcategorization developed.

The consideration of fuel as a factor in waste heat rejection from a powerplant essentially focuses on the differences between present nuclear and fossil-fueled units. In general, the inherent characteristics of a light water nuclear unit make it less efficient than fossil-fired units. This difference in efficiency results in the rejection of more waste heat to receiving waters from nuclear units than from comparable fossil units. Subsequent sections of the report will discuss the technical factors which cause this difference.

Nuclear units generally have basic similarities with regard to age, size, location and utilization which also tend to differentiate them from fossil-fueled units. Nuclear units can be generally classified as being relatively new, relatively large, located in rural or semi-rural areas, and operated as base-load facilities.

These factors are extremely variable when applied to fossil-fueled units on a broad basis. Also, the thermal

waste characteristics of units burning different fossi fuels indicate that there is no basis for distinguishir between fossil fuels for the thermal categorization of th industry. Consequently, the basic subcategorization c once-through cooling systems divides the industry betwee nuclear and fossil-fueled units.

A major factor of concern with regard to fossil-fuele generating facilities is the utilization of individua units. An earlier portion of this section of the repor described the relationship of this factor with age and wit efficiency or heat rate of a generating unit. In additio to this aspect of utilization, another point of concern i the relationship between utilization and the cost o installing facilities to treat waste heat. Utilization i significant in economic analysis, as it provides th operating time against which capital costs may be applied Furthermore, utilization reflects the effluent hea reduction benefit to be achieved by the application o control technology. As defined earlier, the utilizatio aspect of power generation is defined by peaking, cyclin and base load generating facilities. Peaking units ar defined as facilities which have annual capacity factor less than 0.20, while cycling units have annual capacit factors between 0.20 and 0.60 and base-load units hav annual capacity factors in excess of 0.60.

Some difficulty could be encountered, for the purpose o effluent limitations, in determining the level o utilization that a generating unit will achieve in the year to come. It is known, however, that all of the nuclear steam-electric generating units and all of the high-pressure, high-temperature, fossil-fueled units 50 megawatts (Mw) and larger have been designed as base-load units. Almost all nuclear units are 500 Mw and larger.

All of these units presently operating were placed into service since 1960 (excepting only one small nuclear unit initially operated in 1957). The units placed in service during the 1960's had 15 or more years of base-load service ahead of them as of 1970, and would thus have 8 or more years of base-load life as of 1977.

A further difficulty that could be encountered in determining the level of utilization of a generating unit relates to the fact that the only official record of the utilization of individual generating units is the Form 67 "Steam-Electric Plant Air and Water Quality Control Data", which must be filed annually with the Federal Power Commission. Utilities are required to report the capacity

and average annual capacity factor (level of utilization) for each boiler, but not the turbine-generator. Furthermore, prior to 1950, individual boilers were kept small, in large part because boiler outages were rather numerous, so that it was common design practice to provide multiple boilers and steam header systems to supply a turbine-generator. Some stations have the headers connected to multiple turbine-generators. Hence, the problem could arise in these cases as to what comprises a generating unit (boiler(s) plus turbine-generator) and what is its level of utilization. Furthermore, the problem of applying a closed-loop cooling system could be more difficult where multiple boilers supply single or multiple turbine-generators due to the physical and operating problems arising from the multiple connections involved.

However, advances in metal technology since 1950, with associated lower costs of larger units, have made it economical and reliable to have one boiler per turbine-generator. The trend to the larger, one boiler per turbine-generator units began to be significant when the first 300 Mw unit was placed into service in 1955. From 1930 until that time the largest steam electric unit in the U.S. was about 200 Mw. Hence, for units 300 Mw and larger, the unit itself and its level of utilization are clearly defined and the physical and operating problems associated with a closed-loop cooling system and arising from the multiple connections involved are not encountered.

Age was identified in the Act as a factor to be taken into account in the establishment of effluent limitation guidelines and performance standards. As indicated above, the interrelationship between age, utilization and efficiency, has generally been well documented in the steam electric generating industry. Age is also important because the remaining life of equipment provides the basis for the economic write-off of capital investment. Consequently, age is of significance in subcategorizing steam electric generating units not only for technical reasons, but also for economic considerations.

Federal Power Commission depreciation practices indicate the estimated average service life of equipment for steam elec-electric production to be 36 years [87]. Figure IV-10, which shows the improvement of efficiency in the generation of electricity since 1920, indicates a sudden dip in the curve in approximately 1949, or 24 years ago. Based on this process factor and the anticipated service life of equipment, it was decided, for the purposes of the cost analysis, to segment fossil-fueled units by age, with 6

(six-year) segments defining the range of age with regard to generating units.

Site characteristics were considered as a possibility for subcategorization of the industry for thermal discharges. The basic consideration involving location related to the situation of a plant with regard to its cooling water source (ocean, river, estuary, lake, etc.). However, categorization along these lines would in reality violate the intent of the Act, which stresses national uniformity of application and is technology oriented. The control and treatment of waste heat is essentially an internal matter within a powerplant. Absolute location will influence the cost of such control and treatment, but will not generally determine its feasibility. This type of location factor is primarily related to environmental considerations, which are taken into account under Sections 303 and 316 of the Act. Consequently, it was decided not to establish any subcategories for thermal waste characteristics based on location.

Size was another factor which conceivably could form the basis for thermal waste subcategorization of the steam electric powerplant industry. Among those technical and economic factors considered relative to the size of a unit were availability and degree of practicability of control and treatment technology, unit costs of control and treatment technology and their relation to other generating costs, and system reliability. A basis for a size subcategorization would be the precedent established by the Federal Power Commission with regard to the requirements for filing Form 67, "Steam Electric Plant Air and Water Quality Control Data". The FPC does not require filing of this form by powerplants smaller than 25 megawatts, or plants larger than 25 megawatts which do not belong to a utility system with a capacity equal to, or greater than 150 megawatts. Consequently, the data available from this source would not cover the numerous small generating plants under 25 megawatts.

As a result of evaluation of the factors outlined above, informal segmentation for the purposes of the development of effluent limitations guidelines and standards for heat includes a division between nuclear and fossil units and further division of fossil units based on utilization, all followed by age considerations, and finally segmentation by size of unit as defined by cost and other considerations.

Summary

In summary, the most significant of the basic components of all steam electric powerplants which relate to waste water characteristics are the fuel storage and handling facilities, water treatment equipment, boiler, condenser, type of cooling system, and auxiliary facilities. Steam electric powerplants (plants) are comprised of one or more generating units. A generating unit consists of a discrete boiler, turbine-generator and condenser system. Fuel storage and handling facilities, water treatment equipment, electrical transmission facilities, and auxiliary components may be a part of a discrete generating unit or may service more than one generating unit. The characteristic quantity and intensity of the waste heat transferred in the condenser from the expended steam to the cooling water is related to the combined characteristics of the plant components that are its source.

The general subcategorization rationale is summarized in Table IV-7 the subcategorization rationale for heat is summarized in Table IV-8 and the subcategorization rationale for pollutants other than heat is summarized in Table IV-9.

The degree of nonthermal effluent reductions that can be achieved by the application of specific control and treatment technologies are related to the type of source components involved, and further to water use and quality and other considerations peculiar to individual plants. Both unit and plant related characteristics affect the degree of practicability of applying nonthermal waste water control and treatment technology.

Accordingly, the general categorization scheme developed was approached from the basis that separate subcategorizations would be constructed for thermal characteristics and for nonthermal characteristics so that the rationale supporting the one would not necessarily be supportive of the other, and candidate approaches to either could be utilized or discarded on their own merits. Numerous factors were considered as candidates for further subcategorization and are as follows: the age of equipment and facilities, the process employed, waste source (nonthermal characteristics), nonwater quality environmental impact (including energy requirements), site characteristics, size of plant, type of thermal control employed, fuel utilized, and utilization characteristics of the plant, with only the age of unit, its utilization, its generating capacity (size) and type of thermal control employed qualifying as further bases for subcategorization of thermal discharges, and waste source for nonthermal discharges. Many of the above factors are

PART A

CHEMICAL WASTES

SECTION V

WASTE CHARACTERIZATION

Introduction

In this part of the study (Part A) only the nonthermal, or chemical wastes are dealt with. Part B of the report deals with thermal discharges.

Chemical wastes produced by a steam electric powerplant can result from a number of operations at the site. Some wastes are discharged more or less continuously as long as the plant is operating. Some wastes are produced intermittently, but on a fairly regularly scheduled basis such as daily or weekly, but which are still associated with the production of electrical energy. Other wastes are also produced intermittently, but at less frequent intervals and are generally associated with either the shutdown or startup of a boiler or generating unit. Additional wastes exist that are essentially unrelated to production but depend on meteorological or other factors.

Waste waters are produced relatively continously from the following sources (where applicable): cooling water systems, ash handling systems, wet-scrubber air pollution control systems, boiler blowdown.

Waste water is produced intermittently, on a regular basis, by water treatment operations which utilize a cleaning or regenerative step as part of their cycle (ion exchange, filtration, clarification, evaporation).

Waste water produced by the maintenance cleaning of major units of equipment on a scheduled basis either during maintenance shutdown or during startup of a new unit may result from boiler cleaning (water side), boiler cleaning (fire side), air preheater cleaning, stack cleaning, cooling tower basin cleaning and cleaning of miscellaneous small equipment. The efficiency of a powerplant depends largely on the cleanliness of its heat transfer surfaces. Internal cleaning of this equipment is usually done by chemical means, and requires strong chemicals to remove deposits formed on these surfaces. Actually the cleaning is not successful unless the surfaces are cleaned to bare metal,

Preceding page blank

and this means in turn that some metal has to be dissolved in the cleaning solution. Cleaning of other facilities is accomplished by use of a water jet only.

Rainfall runoff results in drainage from coal piles, floor and yard drains, and from construction activity.

A diagram indicating sources of chemical wastes in a fossil-fueled steam electric powerplant is shown in Figure A-V-1. A simplified flow diagram for a nuclear plant is shown in Figure A-V-2. Heat input to the boiler comes from the fuel. Recycled condensate water, with some pretreated make-up water, is supplied to the boiler for producing steam. Make-up requirements depend upon boiler operations such as blowdown, steam soot blowing and steam losses. The quality of this make-up water is dependant upon raw water quality and boiler operating pressure. For example, in boilers where operating pressure is below 2.8 MN/sq m (400 psi), good quality municipal water may be used without pretreatment. On the other hand, modern high-pressure, high-temperature boilers need a controlled high-quality water. The water treatment includes such operations as lime-soda softening, clarification, ion exchange, etc. These water treatment operations produce chemical wastes. According to the FPC[234], the principal chemical additives reported for boiler water treatment are phosphate, caustic soda, lime and alum.

As a result of evaporation, there is a build-up of total dissolved solids (TDS) in the boiler water. To maintain TDS below allowable limits for boiler operation, a controlled amount of boiler water is sometimes bled off (boiler blowdown).

The steam produced in the boiler is expanded in the turbine generator to produce electricity. The spent steam proceeds to a condenser where the heat of vaporization of the steam is transferred to the condenser cooling system. The condensed steam (condensate) is recycled to the boiler after pretreatment (condensate polishing) if necessary, depending upon water quality requirements for the boiler. As a result of condensate polishing (filtration and ion exchange), waste water streams are created.

In a nonrecirculating (once-through) condenser cooling system, warm water is discharged without recycle after cooling. The cool water withdrawn from an ocean, lake, river, estuary or groundwater source may generate biological growth and accumulation in the condenser thereby reducing its efficiency. Chlorine is usually added to once-through

condenser cooling systems to minimize this fouling of heat transfer surfaces. Chlorine is therefore a parameter which must be considered for nonrecirculating cooling water systems.

Cooling devices such as cooling towers are employed in the recirculating cooling systems. Bleed streams (blowdown) must generally be provided to control the build-up of certain dissolved solids or total dissolved solids within the recirculating evaporative cooling systems. These streams may also contain chlorine and other chemical additives. According to the FPC[234], the principal chemical additives reported for cooling water treatment are phosphate, lime, alum and chlorine.

As a result of fossil-fuel combustion in the boiler, flue gases are produced which are vented to the atmosphere. Depending upon the type of fossil fuel, the flue gases carry certain amounts of entrained particulate matter (fly ash) which are removed in mechanical dust collectors, electrostatic precipitators or wet scrubbing or collector devices. Thus fly ash removal may create another waste water stream in a powerplant.

A portion of the noncombustible matter of the fuel is left in the boiler. This bottom ash is usually transported as a slurry in a water sluicing operation. This ash handling operation presents another possible source of waste water within a powerplant.

Depending upon the sulfur content of the fossil fuel, SO_2 scrubbing may be carried out to remove sulfur emissions in the flue gases. Such operations generally create liquid waste streams. Note that SO_2 scrubbing is not required for gas-fired plants, or facilities burning oil with a low sulfur content. Nuclear plants, of course, have no ash or flue gas scrubbing waste streams.

As a result of combustion processes in the boiler, residue accumulates on the boiler sections and air preheater. To maintain efficient heat transfer rates, these accumulated residues are removed by washing with water. The resulting wastes represent periodic (intermittent) waste streams.

In spite of the high quality water used in boilers, there is a build-up of scale and corrosion products on the heat transfer surfaces over a period of time. This build-up is usually due to condenser leaks, oxygen leaks into the water and occasional erosion of metallic parts by boiler water. Periodically, this scale build-up is removed by cleaning the

boiler tubes with different chemicals - such as acids, alkali, and chelating compounds. These cleaning wastes, though occuring only periodically, contain metalic species such as copper, iron, etc. which may require treatment prior to discharge.

The build-up of scale in cooling tower basins and soot build-up in stacks require periodic washings and these operations also give rise to waste streams.

For coal-fired generating units, outside storage of coal at or near the site is necessary to assure continuous plant operation. Normally, a supply of 90 days is maintained. Coal is stored either in "active" piles or "storage" piles. As coal storage piles are normally open, contact of coal with air and moisture results in oxidation of metal sulfides, present in the coal, to sulfuric acid. The precipitate trickles or seeps through the coal. When rain falls on these piles, the acid is washed out and eventually winds up in coal pile runoff, creating another waste stream. Similarly, contaminated floor and yard drains are another source of pollution within the powerplant.

Besides these major waste streams, there are other miscellaneous waste streams in a powerplant such as sanitary wastes, laboratory and sampling wastes, etc. which are also shown in Figure No. A-V-1.

In a nuclear-fueled powerplant, high quality water is used in the steam generating section. Conventional water treatment operations give rise to chemical waste streams similar to those in fossil-fueled powerplants. Similarly, the cooling tower blowdown is another waste stream common to both fossil-fueled and nuclear fueled powerplants. Some wastes in a nuclear plant contain radioactive material. The discharge of such wastes is strictly controlled and is beyond the scope of this project. However, the steam generator in a PWR plant is a secondary system, having a blowdown and periodic cleaning wastes which are not radioactive. Some of the disposal problems associated with low-level radiation wastes from nuclear fuel powerplants are briefly described in this report.

Data was accumulated from different sources to characterize the various chemical wastes described above. The sources of data include:

a. Plants visits and collection of samples for analysis

Total suspended solids in waste water streams from a typical 1,000 megawatt coal-fired plant are as follows:

Low-volume wastes	500 lb/day
Coal-pile runoff	500 lb/day
Ash sluicing	1,240,000 lb/day

A conventional ash pond for a 1,000 megawatt coal-fired plant achieving an average effluent total suspended solids concentrations of 30 mg/l and using 10,000,000 gallons per day of sluice water would discharge 2,650 lb/day of total suspended solids.

Summary of Chemical Usage

Table A-V-15 lists chemicals used in steam electric powerplants corresponding to various classes of uses. Table A-V-16, from the U.S. Atomic Energy Commission document, "Toxicity of Power Plant Chemicals to Aquatic Life," lists chemicals specifically associated with nuclear powerplants and includes some chemicals not included in Table A-V-15.[462] Table A-V-17 gives the annual use of high tonnage chemical additives by powerplants. Table A-V-18 gives chemical compositions of trade-name microorganism control chemicals.

Classification of Waste Waters Sources

Waste water sources can be classified as high-volume, intermediate-volume, low-volume, or rainfall run-off. Table A-V-19 lists the individual waste water sources according to the above classification.

The available data on waste water flow rates corresponding to the various waste water sources in steam electric powerplants are summarized in Table A-V-20 along with typical concentrations of major pollutants.

Table A-V-17

Use of High Tonnage Chemical Additives by Steam Electric Powerplants (1970)[461]

Chemical	Cooling Water Additive, tons	Boiler Water Additive, tons	Total, tons
Alum	2,470	1,751	3,221
Caustic Soda	-	37,998	37,998
Chlorine	24,642	985	25,627
Lime	13,324	7,824	21,148
Phosphate	865	1,100	1,965
Total	41,301	49,658	90,959

PART A

CHEMICAL WASTES

SECTION VI

SELECTION OF POLLUTANT PARAMETERS

Definition of Pollutants

Section 502(6) defines the term "pollutant" to mean dredged spoil, solid waste, incinerator residue, sewage, garbage, radioactive materials, heat, wrecked or discarded equipment, rock, sand, cellar dirt and industrial, municipal and agricultural waste discharged into water. This report addresses all pollutants discharged from steam electric powerplants with the exception of both high-level and low-level radioactive wastes of nuclear powerplants. The exclusion is made for two reasons: (1) administratively, the permiting or licensing authority for nuclear plants, from the standpoint of radiation safety resides with the U.S. Atomic Energy Commission; and (2) it is not known that the application of conventional waste water treatment technology for the control of non-radiation aspects of radioactive waste will not result in the creation of a radiation hazard (e.g. due to the concentration of the suspended solids removed).

Introduction

Section A-V describes various operations in a steam electric powerplant which give rise to chemical wastes. Reported data were included for each waste stream wherever available. The waste streams are specific to each powerplant and depend upon factors such as raw water quality, type and size of plant, age of plant, ambient conditions and operator preferences. Table A-VI-1 summarizes the pollutants present in the various chemical waste streams based on data recorded in Section A-V, Waste Characterization, and knowledge of the respective processes. The data in many cases show a wide variation from plant to plant. This wide variation in data and the presence of many pollutants in a single waste stream makes the selection of characteristic pollutants a difficult task. Table A-VI-2 summarizes the number of plants for which data was recorded in Section A-V for each waste stream.

Common Pollutants

Since powerplant waste effluents are primarily due to inorganic chemicals, the common pollutants reflect the general level of inorganic chemical concentration.

pH Value

pH value indicates the general alkaline or acidic nature of a waste stream, and represents perhaps the most significant single criteria for the assessment of its pollutional potential. While a pH in the neutral range between 6.0 and 9.0 does not by itself assure that the waste stream does not contain detrimental pollutants, a pH outside of this range is an immediate indication of the presence of potential pollutants.

Total Dissolved Solids

Total dissolved solids represents the residue (exclusive of total suspended solids) after evaporation and includes soluble salts such as sulfates, nitrates, chlorides, and bromides. Total dissolved solids are particularly significant as a pollutant in discharges from closed systems which involve recirculation and re-use. These systems tend to concentrate dissolved solids as a result of evaporation and require blowdown to maintain dissolved solids within ranges established by process requirements. The blowdown may contain specific pollutants in detrimental amounts depending on the number of cycles of concentration.

Total Suspended Solids

Total suspended solids is another pollutant which is a characteristic of all the waste streams. Suspended solids are significant as an indicator of the effectiveness of solids separation devices such as mechanical clarifiers, ash ponds, etc. One of the functions of water use in a powerplant is to convey solids from one stage of the process to another or to a point of final disposal. Some processes used in a powerplant create suspended solids by chemically treating compounds in solution so that they become insoluble and precipitate. Turbidity is related to suspended solids but is a function of particle size and not an independent pollutant.

Having established the three common pollutants, the characteristic pollutants of individual waste streams are outlined below.

TABLE A-VI-1

APPLICABILITY OF PARAMETERS TO CHEMICAL WASTE STREAMS

PARAMETER	Condenser Cooling System		Water Treatment				Chemical Cleaning											
	Once Through	Recirculating	Clarification Wastes	Ion Exchange Wastes	Evaporator	Boiler Blowdown	Boiler Tubes	Air Preheater	Boiler Fireside	Ash Pond Overflow	Coal Pile Drainage	Floor Drains	Air Pollution Devices SO_2 Removal	Sanitary Wastes	Low Rad Wastes			
ALKALINITY	X	X	X	X	X	X	X	X	X	X			X					
BOD		X	X	X	X	X	X	X		X		X	X	X				
COD		X	X	X	X	X	X	X	X	X		X		X				
TS	X	X	X	X	X	X	X	X	X	X	X	X	X	X				
TDS	X	X	X	X	X	X	X	X	X	X	X	X	X	X				
TSS		X	X	X	X	X	X	X	X	X	X	X	X	X				
AMMONIA		X	X	X	X	X	X	X	X	X	X			X				
NITRATE		X	X	X	X	X	X			X	X			X				
PHOSPHOROUS		X	X	X	X	X	X			X	X		X	X				
TURBIDITY		X	X		X	X	X	X	X	X	X	X	X	X				
FECAL COLIFORM														X				
ACIDITY							X	X	X	X	X	X	X					
HARDNESS, TOTAL		X	X	X	X	X	X			X		X	X					
SULFATE		X	X	X	X	X	X	X	X	X	X	X	X					
SULFITE								X	X	X		X	X					
BROMIDE							X											
CHLORIDE		X	X		X	X	X	X	X	X	X			X				
FLUORIDE		X	X	X			X			X								
ALUMINUM		X	X		X	X	X		X	X	X		X					
BORON															X			
CHROMIUM		X	X	X	X	X	X	X	X	X	X							
COPPER	X	X	X	X	X	X	X	X	X	X	X							
IRON		X	X	X	X	X	X	X	X	X	X		X					
LEAD										X	X	X						
MAGNESIUM		X	X	X	X	X	X	X	X	X	X	X	X					
MERCURY				X	X		X			X	X							
NICKEL		X	X	X	X	X	X	X	X	X	X							
SELENIUM							X			X	X							
VANADIUM									X	X			X					
ZINC		X	X	X	X	X	X			X	X							
OIL & GREASE				X			X			X		X	X					
PHENOLS		X	X		X					X	X							
SURFACTANTS					X		X			X		X		X				
ALGICIDES	X	X												X				
CHLORINE	X	X																
MANGANESE		X		X	X	X	X		X	X	X		X					

NOTE: Miscellaneous streams such as laboratory sampling, stack chemical cleanings, etc. are not included since the species are accounted for in other streams.

Pollutants from Specific Waste Streams

Biochemical Oxygen Demand (BOD)

BOD is a significant pollutant only for sanitary waste water originating from the use of sanitary facilities by plant personnel.

Chemical Oxygen Demand (COD)

COD is a pollutant usually attributed to the organic fraction of industrial waste waters. Since steam electric powerplants do not have a significant volume of organic wastes, COD is generally not a significant pollutant in powerplant effluents, but may be used as gross indicator for certain combined wastes.

Oil and Grease

Oil and grease enter the plant drainage system primarily as a result of spillage and subsequent washdown during housekeeping operations or following natural precipitation. Oil and grease are also removed from equipment during pre-operational cleaning. Oil and grease is normally present in the following waste streams:

Chemical cleaning	- boiler tubes; - boiler fireside; - air preheater; - miscellaneous small equipment;
Ash handling wastes	- oil fired plants; - coal fired plants;
Drainage and misc. waste streams	- floor and yard drains; - closed cooling water systems; and - construction activity.

Ammonia

Ammonia is a significant pollutant in plants that use ammonia compounds in their operations. Ammonia may be used to control the pH in the boiler feedwater. It may also be used for ion exchange regeneration in condensate polishing and in boiler cleaning. An ammonia derivative, hydrazine, is used as an oxygen scavenger, but is used only in small quantities. Because of its instability, it is not likely to be a component of a waste stream. Ammonia will therefore be a component of those waste streams which emanate from the operations during which ammonia is added to the system, such

as ion exchange wastes, boiler blowdown, boiler tube cleaning and closed cooling water systems.

Total Phosphorus

Phosphates are used by some powerplants in recirculating systems to prevent scaling on heat transfer surfaces. To the extent that they are used, they will be a component of any blowdown from such systems. These include primarily boiler and PWR steam generator blowdown and blowdown from closed cooling water systems but could also include a number of minor auxiliary systems. In some cases, phosphorus compounds are also used in boiler cleaning operations and would therefore be a possible component of cleaning wastes.

Chlorine Residuals

Many condenser cooling water systems use chlorine or hypochlorites to control biological growth on the inside surface of condenser tubes. The biological growth, if left uncontrolled, causes excessive tube blockages, poor heat transfer, and accelerated system corrosion--all of which reduce plant efficiency. For any cooling tower system the length of time of the chlorine feed period and the number of chlorine feed periods per day, week, or month change as the biological growth situation changes. In most cooling systems, the chlorine is added at or near the condenser inlet in sufficient quantity to produce a free available chlorine level of 0.1-0.6 mg/l in the water leaving the condenser. The amounts of chlorine added to maintain the free available chlorine depend upon the amount of chlorine demand agents and ammonia in the water.

Chlorine and ammonia react to form chloramines. Chloramines contribute to the combined residual chlorine of the water. The combined residual chlorine is less efficient and slower in providing biological control than is the free available chlorine. Total residual chlorine is the sum of the free available chlorine and the combined residual chlorine.

Although chlorination is effective for slime control in condenser tubes of cooling system, its application may result in the discharge of total residual chlorine to the receiving water. The effects of total residual chlorine on aquatic life are of great concern.

Metals

Various metals may be contained in some of the waste streams as a result of corrosion and erosion of metal surfaces and

as soluble components of the residues of combustion where such residues have been handled hydraulically.

Blowdown from boiler feedwater systems and from closed cooling water systems will contain trace amounts of the metals making up the heat exchanger surfaces with which they have been in contact. Treatment of these waters generally minimizes the amount of corrosion. However, cleaning operations of these systems are designed specifically to restore the heat transfer surfaces to bare metal. In this process significant amounts of metal and metal oxide are dissolved and are conveyed with the waste streams. The two most common metals likely to be present in cleaning wastes are iron and copper.

Metals present in wastes from fuel storage and from ash handling operations will depend on the metals present in the fuel. Generalization is difficult because of the wide variation in fuel composition, but iron and aluminum are typically present in significant quantities in ash from coal. Mercury may be present if the coal used contained mercury. Vanadium is present in sufficient quantities in ash resulting from the burning of some types of residual fuel oil, notably of Venezuelan origin.

If chromates and/or zinc compounds are used for the treatment of closed cooling water systems, chromium and/or zinc will be significant pollutants for any blowdown or leakage from these systems.

These metals are likely to occur in the following waste streams:

1. Iron

water treatment	- clarification;
maintenance cleaning	- boiler tubes;
	- boiler fireside;
	- air preheater;
ash handling	- coal fired plants; and coal pile drainage.

2. Copper

boiler and steam generator (PWR) blowdown;	
chemical cleaning	- boiler tubes;
	- air preheater;
	- boiler fireside
condenser cooling water systems	- once through; and recirculating

3. Mercury

ash handling - coal fired plants; and coal pile drainage.

4. Vanadium (oil-fired plants only)

ash handling;
chemical cleaning - boiler fireside; and
- air preheater.

5. Chromium and Zinc

recirculating condenser cooling system; and closed cooling water system.

6. Aluminum and Zinc

coal pile drainage;
ash handling - coal fired plants;
water treatment - clarification;
chemical cleaning - boiler fireside; and
- air preheater.

Phenols

Polychlorinated biphenyls (PCB's) are sometimes used as coolants in large transformers. PCB's may also be used as heat transfer fluids and for other purposes. In case of leaks or spills, these materials could find their way into the yard drainage system. Materials showing up as phenols are also possible in drainage from coal piles, floor and yard drainage, ash handling streams, and cooling tower blowdown.

Sulfate

Sulfates in powerplant effluents arise primarily from the regenerant wastes of ion exchange processes. Sulfate may occur in ion exchange and evaporator wastes, boiler fireside and air preheater cleaning, ash handling and coal pile drainage.

Sulfite

Sulfite is used as an oxygen scavenger in the boiler feedwater system in some plants. Plants using sulfite may discharge the sulfite with their boiler blowdown. Because

of its high oxygen demand, sulfite in significant quantities is considered undesirable in a plant discharge.

Sulfite may occur in the following waste streams:

maintenance cleaning	- boiler fireside;
	- air preheater;
	- stack;
	- cooling tower basin;
ash handling	- oil fired plants;
	- coal fired plants;

coal pile drainage; and
air pollution control
devices for SO_2 removal.

Boron

Oxidizing agents such as potassium or sodium borate may be contained in cleaning mixtures used for copper removal in the chemical cleaning of boiler and steam generator (PWR) tubes.

Fluoride

Hydrofluoric acid or fluoride salts are added for silica removal in the chemical cleaning of boiler and steam generator (PWR) tubes.

Alkalinity and Acidity

Both alkalinity and acidity are parameters which are closely related to the pH of a waste stream.

Total Solids

Total solids is the sum of the total suspended solids and the total dissolved solids.

Fecal Coliform

Fecal coliform is only significant in sanitary waste.

Total Hardness

Hardness is a constitutent of natural waters, and as such is not generally considered as a pollutant in effluents from industrial processes. Also, hardness is not harmful in the concentrations recorded in Section A-V.

Chloride and Magnesium

Both chloride and magnesium are not practicably treatable at the levels recorded, and also are not harmful at the levels present in the various waste streams.

Bromide

Bromide may result from boiler cleaning operations, but is not considered harmful at the levels present. Moreover, it is not practicably treatable at these levels.

Nitrate and Manganese

Nitrate and manganese are also not harmful nor practicably treatable at the levels present in the various waste streams.

Surfactants

Surfactants are not practicably treatable at the recorded levels.

Algicides

Very little data was found for algicides (exclusive of chlorine) although various algicides may be utilized in cooling water systems. Most utilities requiring algicides utilize chlorine.

Other Potentially Significant Pollutants

The following are potentially significant pollutants, which may be present in effluents from steam electric powerplants, but for which little data are available at this time.

Cadmium
Lead
Nickel
Selenium

Complete analyses of the fossil fuel used by a particular plant can be used as a basis for determining which pollutants, in addition to those covered by effluent limitations guidelines and standards, are likely to be present in effluents in quantities justifying monitoring and the establishment of effluent limitations.

Selection of Pollutant Parameters

The U. S. Environmental Protection Agency published (Federal Register, Volume 38, No. 199, pp. 28758-28670, October 16, 1973) 40 CFR 136 "Guidelines Establishing Test Procedures for the Analysis of Pollutants." Seventy-one pollutant parameters were covered. This list with the addition of free available chlorine, polychlorinated biphenyls, chemical additives, debris and pH, which were not included, provides the basis for the selection of pollutant parameters for the purpose of developing effluent limitations guidelines and standards. All listed parameters are selected except for these excluded for one or more of the following reasons:

1. Not harmful when selected parameters are controlled
2. Not present in significant units
3. Not controllable
4. Control substitutes more harmful pollutant
5. Insufficient data available
6. Indirectly controlled when selected parameters are controlled.
7. Indirectly measured by another parameter
8. Radiological pollutants not within the scope of effluent limitations guidelines and standards.

Table A-VI-3 presents a breakdown of the methodology for selection of parameters for the following waste water stream (except for sanitary wastes) which comprise the entire waste water discharged from steam electric powerplants:

High Volume

- nonrecirculating (once-through) condenser cooling systems

Intermediate Volume

- blowdown from recirculating condenser cooling water systems
- nonrecirculating ash sluicing systems;
- nonreciruclating service water systems

- nonrecirculating wet-scrubbing air pollution control systems

Low Volume

- blowdown from recirculating ash sluicing systems
- blowdown from recirculating wet-scrubber air pollution control systems
- boiler blowdown
- equipment cleaning (air preheater, boiler fireside, boiler tubes, stack, etc.)
- evaporator blowdown
- flow drains
- intake screen backwash
- recirculating service water systems
- water treatment system

Rainfall Runoff

- coal pile drainage
- road and yard drains
- construction activities

Sanitary System

The selected parameters for the various classes of waste water streams are shown in Table A-VI-4.

Environmental Significance of Selected Pollutant Parameters

The environmental significance of many of the pollutant parameters evaluated in this section are discussed in detail in "Water Quality Criteria 1972," a report of the Committee on Water Quality Criteria, Environmental Studies Board, National Academy of Sciences/National Academy of Engineering, published in 1972 at the request of and funded by the U.S. Environmental Protection Agency. The report addresses the several parameters individually in the light of water quality needs for recreation and aesthetics, public

Various Waste Streams - Concentration and Recycle

Vapor-compression evaporation systems can be used to recover and recycle water from various waste streams encountered normally in a steam electric generating plant. These streams include boiler blowdown, demineralizer blow-down, ash sluicing water blowdown, coal pile runoff, SO_2 scrubber blowdown, treated sewage effluent, boiler cleaning waste and cooling tower blowdown. Two case histories in which the vapor-compression evaporation systems (brine concentrator) have been installed in steam electric generating plants are described below.

Case I (See Figure A-VII-39 and Table A-VII-16) is an application of the brine concentrator that was placed in operation on June 14, 1974. This application will ultimately employ several brine concentrators to completely eliminate wastewater blowdown from the ash sluice system. The ash sluice water is provided by the cooling tower blowdown where it is recycled to the boiler and ash is sluiced to the ash separator. The supernatant from the ash separator is recycled to the ash sluice water storage tank for reuse. The blowdown from the ash sluice water storage tank is processed in the brine concentrator where the concentration of total solids is increased to over 100,000 ppm. It is contemplated that as additional generating units are placed on line, additional brine concentrtors will be installed so that eventually the only feed to the pond will be the waste from the brine concentrators.

Case II (See Figure A-VII-40 and Table A-VII-17) is an application of the brine concentrator that was placed in operation on June 28, 1974. This installation will eventually be used to process a blowdown from various generating plant waste streams. However, the brine concentrator is currently being utilized to concentrate only cooling tower blowdown. The blowdown will be concentrated approximately 40 times such that the feed of 156 gpm is reduced to 3.7 gpm of concentrate. At this installation, the client anticipates a wide variation in the feedwater chemistry to the brine concentrator. On the chemistry data sheet are shown the maximum TDS design conditions and the normal value TDS conditions.

Evaporation ponds are in use at a number of steam electric powerplants to reduce waste streams to dryness. Plant No. 4883 uses 101,000 sq ft of lined evaporation pond to evaporate a maximum flow of 43,000 gal/day of waste water to

dryness. Configured systems are being installed at three steam electric powerplants (plant nos. 0413, 3517 and 4907). The configured systems use brine concentrators which recycle the distillate to the demineralizer system or to the cooling tower. All process 156 gpm of cooling tower blowdown. However, water treatment wastes, etc., are combined with the recirculation cooling water. The plants involved are designed to achieve no discharge of pollutants through recycle of waste water streams. Therefore, the concentrated brine ultimately contains all plant wastes. The cost of the units are approximately $2-4/kw with about 18 months required for installation. The application of evaporative brine concentrators to low-volume waste stream effluents after chemical treatment is not known to have been achieved. Therefore, some technical risks may be involved in applying this technology directly to low-volume waste water of powerplants.

Sludge Disposal

The major solid wastes from powerplants can be classified into three categories:

1. Fuel related wastes (ash) - flyash, bottom ash and boiler slag
2. Scrubber sludges - from non-regenerable (throwaway) flue gas desulfurization systems
3. Chemical sludges - from water and effluent treatment systems

Of the three wastes, partial utilization of ash has been commonly practiced. Tables A-VII-18 and A-VII-19 indicate ash collection and utilization data (Ref. 33). Estimated 1976 ash production is also shown in Table A-VII-18. It can be seen that the largest usage has been, and continues to be, as fill material for roads, construction sites, etc. However, new commercial processes are being developed and the trend seems to be to increase ash utilization for other applications. Some recent developments which offer potential high-tonnage ash utilization are as follows: (Ref. 33).

1. A material composed of lime, flyash and sulfate or sulfite sludges was used to pave some access roads and parking areas at Dulles International Airport (Washington, D.C.) for the Transpo '72 exhibition. 2. Two cement companies announced new plants and programs to market for general construction purposes a portland pozzolan cement that is a blend of portland cement and flyash. 3. A new project in northern West Virginia will use 250,000 tons of

Table A-VII-18

Ash Collection and Utilization, 1971 (Tons) [33]

	Fly Ash	Bottom Ash	Boiler Slag
Ash uses:			
1. Mixed with raw material before forming cement clinker	104,222	–	91,975
2. Mixed with cement clinker or mixed with pozzolan cement	16,536	–	–
3. Partial replacement of cement in:			
a. Concrete products	177,166	35,377	76,563
b. Structural concrete	185,467	–	–
c. Dams and other mass concrete	71,411	–	–
4. Lightweight aggregate	178,85[illegible]	13,942	–
5. Fill material for roads, construction sites, etc.	363,385	533,682	2,628,885
6. Stabilizer for road bases, parking areas, etc.	36,939	7,880	49,564
7. Filler in asphalt mix	147,655	2,833	81,700
8. Miscellaneous	98,802	475,417	428,026
Subtotal	1,380,478	1,069,131	3,356,713
Ash removed from plant site (at no cost to utility, but not covered in categories listed above, see Table II below)	1,872,728	542,895	381,775
Total ash utilized	3,253,206	1,612,026	3,738,488
Ash removed to disposal areas (at company expense)	24,497,848	8,446,941	1,232,298
Total ash collected, 1971 *	27,751,054	10,058,967	4,970,786
Estimated 1976 ash production	36,994,436	117,411,603	2,517,703

* These ash production figures are for electrical utilities, which account for 60% of the bituminous coal and 80% of the ash-producing oil that is consumed in the U.S.

Table A-VII-19

Known Uses for Ash Removed From Plant at No Cost to Utility (Tons) [33]

	Fly Ash	Bottom Ash	Boiler Slag
Cement manufacture	51,697		
Mine-fire control	129,258	38,940	
Anti-skid winter roads	82,948	178,323	166,131
Building blocks and fill material		14,741	229,393
Experimental soil conditioner	25		
Misc. fill material	477,918	34,760	
Airport pavement	16,200		
Soil stabilization	5,035		
Fertilizer filler	1,321		
Rubber filler	296		
Vanadium recovery	200	200	
Dust control		11,284	
Asphaltic wear-course aggregate			2,130
Total	764,898	278,248	397,654

bottom ash and boiler slag as aggregate for a new portion of West Virginia's Route 2. Besides conserving dwindling supplies of local natural aggregates, this use of ash is expected to save $500,000 in material costs. 4. Ontario Hydro commenced operation of its flyash processing plant at Mississauga, Ontario, to make pozzolan, aggregate, magnetite and carbon products. Also, International Brick and Tyle's flyash brick plant near Edmonton, Alta., has started production; it is designed to initially provide 6.25 million units annually to the face-brick and paving-tile market in western Canada. The process being used was developed by the Coal Research Bureau of West Virginia University. This process will also be used in Czechoslovakia in a plant that will consume about 100,000 tons/year of flyash. 5. Specifications for "lime-flyash-aggregate" base material are anticipated to become part to the Federal Aviation Administration's construction guidelines. Newark and JFK Airports have already utilized this type of material in the construction of runways for new, heavier aircraft. Similar pavements are being designed for airports at other locations.

Besides these commercial applications, extensive research is being conducted to utilize ash in agriculture as fertilizer, in brick manufacturing, for land and water reclamation, and for fire control purposes.

The traditional ash disposal methods - namely ponding and landfill - are expected to remain in widespread practice. These methods have been described in the literature (Ref. 417).

Dewatering and fixation aspects related to the disposal of scrubber sludges from non-regenerable (throwaway) flue gas desulfurization systems have been described in the literature (Ref. 417).

Chemical sludges resulting from water and effluent treatment systems in a powerplant can be disposed in landfill or ponding operations. Table A-V-20 indicates typical chemical wastes originated in a coal-fired powerplant. Based on this tabulation, it is possible to estimate the annual volume of sludges resulting from the treatment of these waste streams. For example, for a 1,000 Mw coal-fired powerplant chemical sludges will require an additional land area of approximately 2-7% for pondage. This is based on the waste characterization shown in Table A-V-20 and the following assumptions:

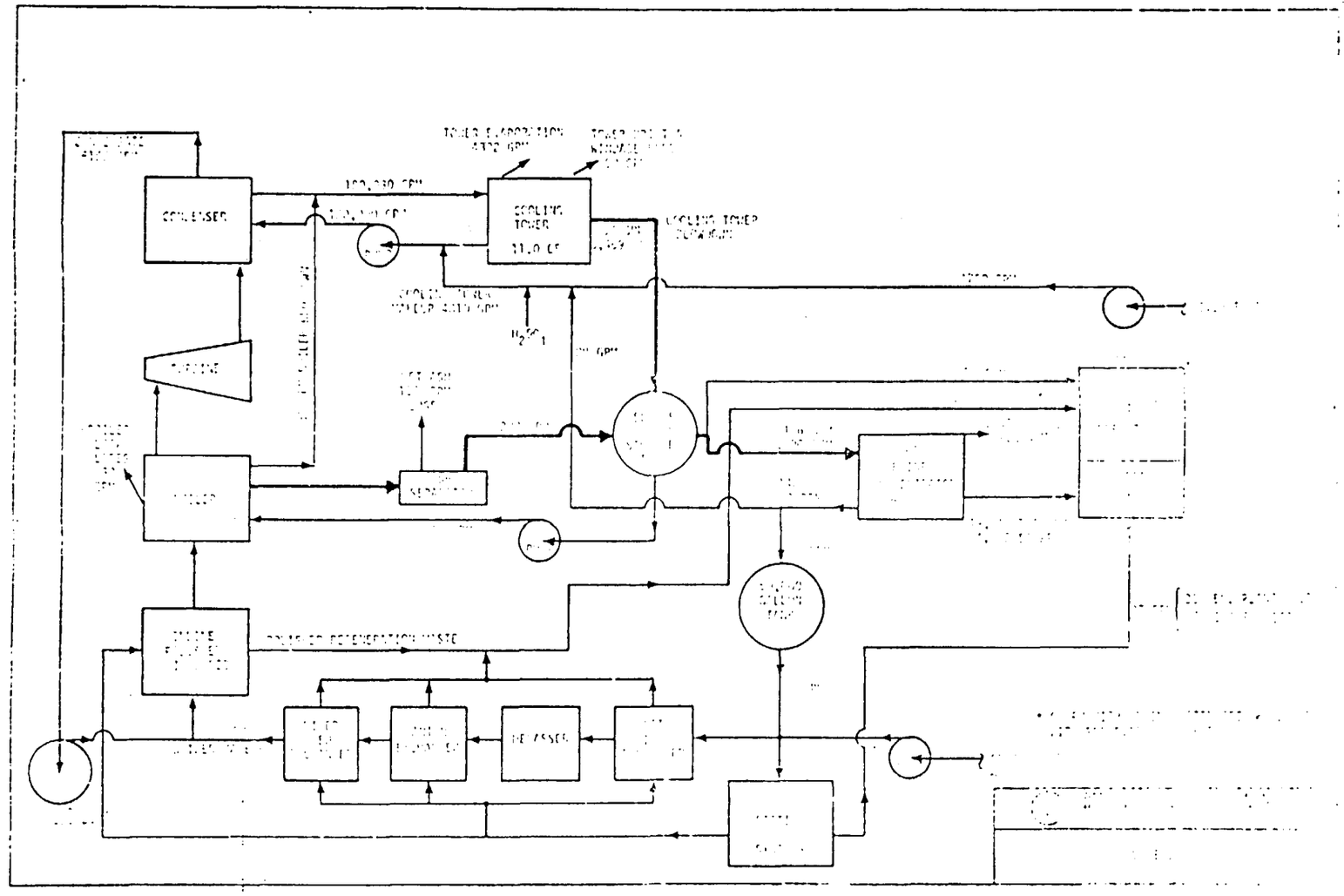

Figure A-VII-39 Vapor-Compression Evaporation System (Case I) 452
System commissioned on June 14, 1974

Reproduced from best available copy.

Table A-VII-16

RCC BRINE CONCENTRATOR SYSTEM CHEMISTRY (Case I) [452]

COMPONENT	CONCENTRATOR FEED (TDS)	CONCENTRATOR WASTE BRINE (TDS)*	PRODUCT WATER
CALCIUM (As Ca^{++})	529 PPM	520 PPM	
MAGNESIUM (As Mg^{++})	276	7,800	
SODIUM (As Na^{+})	55	2,850	
BICARBONATE (As HCO_3^{-})	488	-	
SULFATE (As $SO_4^{=}$)	2,002	36,528	
CHLORIDE (As Cl^{-})	62	1,800	
SILICA (As SiO_2)	55	250	
*30 CONCENTRATION FACTORS			
TDS (PPM)	3,467	49,748	< 10
SS (PPM)	-	54,862	-
FLOW RATE (GPM)	156	5.2	148
pH	8.0-8.5	7.0-7.6	6.0-7.0

discharge of ash in waste water effluents. An example of such a system is the upgraded waste treatment facility now operating at plant No. 3630. In this system, bottom ash is sluiced from the ash hoppers and collected in the hydrobins. The sluicing water is recirculated back to the hoppers thus making a closed loop system.

Wastewater Management

Because of the varied uses that are made of water in a powerplant and the wide range of water quality required for those uses, powerplants present unusual opportunities for wastewater management and water reuse. The highest water quality requirements are for the boiler feedwater supply. Makeup to this system must be demineralized to TDS concentrations of the order of 50 mg/l for intermediate pressure plants and 2 mg/l for high pressure plants. Boiler blowdown is generally of higher purity than the original source of supply, and can be recycled for any other use in the plant, including makeup to the demineralizers. In plants using closed cooling water systems, the blowdown from the cooling system is of the same chemical quality as the water circulating in the condenser cooling system. Limits on the water quality in that system is governed by the need to remain below concentrations at which scale forms in the condenser. However, if calcium is the limiting component, the introduction of a softening step in the blowdown stream would restore the waste to a quality suitable for reuse. Even without softening, the blowdown from the condenser cooling water system is suitable for makeup to the ash sluicing system, or for plants using alkaline scrubbers for control of sulfur dioxide in stack gases, as makeup to that system. Plants located adjacent to mines (mine-mouth plants) often have additional requirements for low quality water for ore processing at the mine.

With these cascading water uses it is frequently possible to devise water management systems in which there is no effluent as such from the powerplant. These plants still have significant overall water requirements, but the water is used consumptively for evaporation and drift in cooling towers, for sulfur dioxide removal, or for ash handling and ore preparation. Figures A-VII-41, 42 show flow diagrams, taken from Reference 378, for a typical 600 Mw coal-fired plant, with and without waste water management to achieve no discharge of pollutants. An equalization basin is usually provided for temporary large waste discharges such as result from cleaning operations, but even these wastes can be reintroduced into the system at a later time. Several

plants visited during this study were using water management schemes of this type without economic penalties. Water management may be the most economical mode for operating a powerplant in a water short area. There can be no doubt that the concept of no discharge of pollutants is feasible for many steam electric powerplants. A number of plants within the industry currently practice recycle and reuse in varying degrees and in a number of different ways. Several plants constructed within the last few years were designed for minimal or no discharge. See Figure A-VII-43.

Plant No. 3206 was intended to be a no discharge facility and is achieving that goal although some operating problems have been encountered. The plant receives slurried coal by pipeline and after dewatering reuses the water in its service system. Makeup to the cooling towers is softened to obtain 16-17 concentrations in the system and therby minimize blowdown. Ash sluicing water is also recycled and blowdown from this system along with other blowdown streams are sent to evaporation ponds for final disposal.

Plant No. 5305 is a mine-mouth facility which also was designed to produce no discharge other than that resulting from coal pile drainage and the effluent from the sewage treatment plant. Discharges from plant operations, including cooling tower blowdown, water treatment wastes, boiler blowdown, floor drains and blowdown from a closed ash sluicing system are collected in effluent storage ponds. Makeup to the ash sluicing operation is taken from these ponds, but the major portion of the water is transported to the mine and coal preparation plant. The plant is an excellent example of cascading water reuse to usages requiring successively lower water quality. A large amount of the water withdrawn from the river is lost through evaporation in the cooling towers. The remainder is either ultimately tied up with filter cake at the coal preparation plant or disposed of with wet ash. Both the filter cake and the ash are returned to the mine for use as fill.

Plant No. 0801 utilizes a series of ponds to achieve intermittent controlled discharge for use in irrigation. The ponds provide the water required for condenser cooling, boiler feed, flue gas scrubbing and ash sluicing. Ash sluice, boiler blowdown and scrubber wash water are discharged to two alternately used ash ponds. Overflow from these ponds and condenser cooling water are discharged to a series of three ponds or lakes. The third in the series of ponds serves as the water source, thus providing a completely closed system.

Several generating stations are utilizing closed-loop recirculating systems for ash sluicing operations. Systems of this type are capable of achieving effluent reductions up to no discharge of pollutants in wastewater effluents. Examples of such systems include plants 3630 (a retrofit) and 3626. Both of these installations collect sluiced bottom ash in hydrobins, and recirculate the water back to the ash hoppers for sluicing. This type of system is particularly suited to plants where sufficient land is not available for effective ash ponds. Plant No. 4846 also utilizes a closed-loop ash sluicing system, but employs an ash pond with discharge from the pond being pumped back to the plant.

Plant No. 3630 has a retrofit system for achieving no discharge of pollutants from bottom ash sluicing, boiler cleaning wastes, floor drainage, boiler blowdown, evaporator blowdown, and demineralizer wastes. This is achieved through the re-use of neutralized demineralizer waste water, boiler cleaning effluents, floor drainage, boiler blowdown, and evaporation blowdown in the ash sluicing operation. Ultimate blowdown is achieved through the moisture content (15-20 percent) of the bottom ash discharged to trucks for off-site use. Fly ash, handled dry, is also trucked to off-site uses. The plant capacity is 600 Mw and operates in the base-load mode. The bottom ash recycle and handling system occupies a space approximately 200 ft square. The entire system cost about $2 million including equipment, foundations, re-piping, pumps, and instrumentation and took approximately two years to install including engineering, purchasing, delivery, and installation. The same plant retrofit a system for collecting and filtering coal-pile drainage and road and building drainage. The coal pile trench is designed to handle drainage from a "once-in-30-years" rainfall (3.9 inches). The filtering pond is 100 ft in diameter and the filter bed is sand. Trash from the bar screens of the intake is buried on-site. The demineralizer neutralization system cost about $80,000, the boiler cleaning effluent tanks about $100,000, re-piping about $250,000, and the intake screen washing system about $35,000.

Other plants employ various recycle and reuse techniques depending upon their water needs, environmental effects, plant layout, etc. Plants 2119 and 4217 utilize cooling tower blowdown as makeup to the ash sluicing system. Plant No. 3713 discharges treated chemical wastes from the ash pond into the intake to the condenser cooling water stream. Plant No. 4216 utilizes a closed-loop wet scrubbing device for air pollution control, and plant 2512 sluices fly ash

from an electrostatic precipitator to a pond and reuses the water in the sluicing system.

A number of plants, including Nos. 2512, 2525, 3601A, and 4217 utilize central treatment facilities or ponds to treat chemical type wastes to acceptable levels for discharge. The effluents produced could be reused, but the availability of an adequate, cheap water supply has not made this necessary in these instances.

Recycling in nuclear plants and plants with no ash sluicing will depend primarily upon treatment of cooling tower blowdown and re-use of the blowdown as make up to the tower. The wastes resulting from water treatment could be recycled to the influent of the water treatment plant. Blowdown from these internal recycling schemes would be treated by desalination techniques to remove total dissolved solids, and as a result, water produced by this treatment could also be recycled. In plants where a water surplus would occur, the intent would be complete treatment for removal of all pollutants and discharge of clean water to the receiving stream. This interpretation of "no discharge" is meant to be no discharge of pollutants, rather than no discharge of any liquid stream. Generally, however, it is anticipated that even nuclear plants and plants with no ash sluicing would not have a water surplus, but would require makeup to the various internal recycling schemes.

In any case the degree of practicability of recycle and re-use systems would be favored in cases where; a) Tower construction is corrosion resistant to water high in TDS, sulfates and chlorides. b) Piping systems and equipment are lined or resistant to corrosion. c) Condenser leakage affecting feedwater quality for sustained power operation is minimized or compensated for. d) Sludge handling and disposal facilities are adequately designed and available. e) Designs for tower operation at a high number of cycles of concentration could be feasible if windage and drift losses are minimized to eliminate heavy carryover of solids to the surrounding areas.

The extent to which wastewater management can be practiced depends on the chemical constituents of the original water supply. Table A-V-2 , adapted from an unpublished paper by G.R. Nelson, shows the typical raw water characteristics of a water supply for powerplant water systems. A water supply falling within the range of concentrations shown on Table A-V-2 could probably be used for a once-through cooling system without treatment. However, if this source of supply were used for recirculating cooling, certain constituents might

limit the number of cycles of concentration possible without precipitation and resultant loss of heat transfer capacity. Since the number of cycles of concentration determines the quantity of circulating water that can be maintained with a given quantity of makeup, it is generally desirable to achieve the largest number of cycles possible for any given raw water analysis. The factors limiting the number of cycles are shown in Table A-V-1.

If the number of cycles of concentration limited by the hardness of the water supply, the plant has several options to increase the number of cycles and thereby reduce both the makeup and discharge water quantitites. These include:

1. Makeup water treatment programs (makeup programs) - where all or a portion of the makeup is treated prior to entering the system. The treatment results in a net reduction in the makeup and discharge water quantities.

2. Recirculating water treatment programs (recirculating programs) where all or a portion of the recirculating water is treated and recycled back to the cooling system. The treatment results in a net reduction in the makeup and discharge water quantitities.

3. Blowdown water treatment programs (blowdown programs) - where all or a portion of the blowdown is treated and recycled back to the cooling system. Again, the net result is a reduction in the makeup and discharge water quantities.

In summary, the concept of recyle or re-use is not new to the steam electric powerplant industry. Many plants utilize a variety of recycle schemes to satisfy particular needs, and these systems have the potential for broad application in the industry to meet effluent limitations guidelines.

Effluent Reduction Benefits of Waste Water Treatment to Remove Chemical Pollutants

The use of a conventional ash pond at a 1,000 megawatt coal-fired plant (capacity factor = 0.6) typically achieves the removal of over 1,200,000 lb/day of total suspended solids, with an overflow of 1,400 lb/day of total suspended solids. This is based on 1970 data for the Bull Run plant of T.V.A.[279] and an assumed 11% of ash solids in coal. It is estimated that about 70-75 percent of the U.S. coal-fired generating capacity uses ash ponds, as indicated by the data sample summarized in Table A-VII-20. For a pulverized coal burner about 75% of the ash generated is fly ash. However, the overflow discharge of total suspended solids from

PART B

THERMAL DISCHARGES

SECTION V

WASTE CHARACTERIZATION

General

Significant thermal discharges from steam electric powerplants occur when a powerplant utilizes a once-through circulating water system to reject the heat not converted into electric energy. The amount of heat energy discharged with the circulating water is equal to the heat value of the fuel less the heat value converted into electric energy and miscellaneous station losses. The heat energy discharged is therefore directly related to the efficiency of the plant. According to industry practices, the efficiency of a generating unit is expressed as its heat rate, in units of Joules per kwh (Btu per kwh). A new fossil-fired generating unit may be designed for a heat rate of 9.5 million Joules per kwh (9,000 Btu/kwh). Since one kwh is equivalent to 3.6 million J/kwh (3,413 Btu), such a plant would have an efficiency of 38%.

The transfer of heat from the condensing steam to the cooling water results in a temperature rise of the cooling water. For a given amount of heat transfer, the temperature rise of the cooling water is inversely proportional to its flow. That is, one may either heat a small quantity of water a great deal, or a large quantity of water a small amount. On the average, temperature rises have been centered about 9 degrees C (16 degrees F) for economic and process considerations (Figure B-V-1). It is clear, however, that almost any lower limit on temperature rise can be achieved given a sufficiently large source of cooling water and no economic constraints. It is also clear, however, that a temperature difference reduction does not limit the amount of heat rejection.

Quantification of Waste Stream Characteristics

The data presented below were obtained from the Federal Power Commission and represent a summary of the data collected on "FPC Form 67" for the year 1969.[280] These data have been screened to eliminate obvious inconsistancies. The statistical analyses have been performed using standard subroutines available from IBM in their scientific subroutine package (1000) operating units. All units in

Preceding page blank

straightforward manner to compute the increase in internal energy or heat content.

Environmental Significance of Effluent Heat

The effects of effluent heat on the environment are generally correlated with water temperature.

Temperature is one of the most important and influential water quality characteristics. Temperature determines those species that may be present; it activates the hatching of young, regulates their activity, and stimulates or suppresses their growth and development; it attracts, and may kill when the water becomes too hot or becomes chilled too suddenly. Colder water generally suppresses development. Warmer water generally accelerates activity and may be a primary cause of aquatic plant nuisances when other environmental factors are suitable.

Temperature is a prime regulator of natural processes within the water environment. It governs physiological functions in organisms and, acting directly or indirectly in combination with other water quality constituents, it affects aquatic life with each change. These effects include chemical reaction rates, enzymatic functions, molecular movements, and molecular exchanges between membranes within and between the physiological systems and the organs of an animal.

Chemical reaction rates vary with temperature and generally increase as the temperature is increased. The solubility of gases in water varies with temperature. Dissolved oxygen is decreased by the decay or decomposition of dissolved organic substances and the decay rate increases as the temperature of the water increases reaching a maximum at about 30°C (86°F). The temperature of stream water, even during summer, is below the optimum for pollution-associated bacteria. Increasing the water temperature increases the bacterial multiplication rate when the environment is favorable and the food supply is abundant.

Reproduction cycles may be changed significantly by increased temperature because this function takes place under restricted temperature ranges. Spawning may not occur at all because temperatures are too high. Thus, a fish population may exist in a heated area only by continued immigration. Disregarding the decreased reproductive potential, water temperatures need not reach lethal levels to decimate a species. Temperatures that favor competitors,

Maximum outfall temperature will not vary with industry grouping since it is the sum of ambient water temperature (which is unrelated to grouping) and temperature rise across the condenser (which does not vary with grouping).

In summary, the only waste stream characteristic which varies with industry grouping is the quantity of heat rejected to the cooling water. The other characteristics vary with locale, season, etc., and require site-by-site evaluation to draw any reasonable conclusion.

Finally, Table B-V-3 summarizes typical waste stream characteristic ranges for each grouping.

Effluent Heat Characteristics from Systems Other Than Main Condenser Cooling Water

Waste heat from house service water systems and other smaller sources can contribute about 1% of the total effluent heat discharged from a generating plant. For example, the thermal discharges of one nuclear plant (no. 4251) are shown in Table B-V-4. House service water systems can be either once-through (nonrecirculatory) or recirculating. Nuclear plants have emergency core cooling systems connected to the house service water system. Where closed house service water systems are used for nuclear plants, U.S. Atomic Energy Commission Safety Guide 27 requires (indirectly) that sufficient water be stored on-site (storage pond) to assure an ultimate heat sink for safety purposes.

Environmental Risks of Powerplants Heat Discharges

Reference 446 reports the results of analyses of the environmental risks associated with thermal discharges from powerplants by age, size, etc. based on a random sample of 180 plants with 455 units. The sample represents one-seventh of the U.S. generating capacity through 1978.

predators, parasites, and disease can destroy a species at levels far below those that are lethal.

Fish food organisms are altered severely when temperatures approach or exceed 90°F. Predominant algal species change, primary production is decreased, and bottom associated organisms may be depleted or altered drastically in numbers and distribution. Increased water temperatures may cause aquatic plant nuisances when other environmental factors are favorable.

Synergistic actions of pollutants are more severe at higher water temperatures. Given amounts of domestic sewage, refinery wastes, oils, tars, insecticides, detergents, and fertilizers more rapidly deplete oxygen in water at higher temperatures, and the respective toxicities are likewise increased.

When water temperatures increase, the predominant algal species may change from diatoms to green algae, and finally at high temperatures to blue-green algae, because of species temperature preferentials. Blue-green algae can cause serious odor problems. The number and distribution of benthic organisms decreases as water temperatures increase above 90°F, which is close to the tolerance limit for the population. This could seriously affect certain fish that depend on benthic organisms as a food source.

The cost of fish being attracted to heated water in winter months may be considerable, due to fish mortalities that may result when the fish return to the cooler water.

Rising temperatures stimulate the decomposition of sludge, formation of sludge gas, multiplication of saprophytic bacteria and fungi (particularly in the presence of organic wastes), and the consumption of oxygen by putrefactive processes, thus affecting the esthetic value of a water course.

In general, marine water temperatures do not change as rapidly or range as widely as those of freshwaters. Marine and estuarine fishes, therefore, are less tolerant of temperature variation. Although this limited tolerance is greater in estuarine than in open water marine species, temperature changes are more important to those fishes in estuaries and bays than to those in open marine areas, because of the nursery and replenishment functions of the estuary that can be adversely affected by extreme temperature changes.

PART B

THERMAL DISCHARGES

SECTION VII

CONTROL AND TREATMENT TECHNOLOGY

Introduction

This section contains a general discussion of the various methods for controlling thermal discharge from steam electric power stations. There are three methods available to reduce the gross amount of heat rejected to receiving waters from the steam electric power generation process. These methods are:

- process change
- waste heat utilization
- cooling water treatment

Various process changes can be made to the basic Rankine cycle to increase its thermal efficiency. These process changes include increasing boiler temperature and pressure rating, the addition of reheat and regenerative cycles and reducing turbine exhaust pressure. In addition, the Rankine cycle can be replaced with other forms of generation which are inherently non-polluting. Several of these new forms of generation are already available, such as the gas turbine Brayton cycle and the combined cycle plant. Looking to the future, transfer of gas turbine technology from the aerospace industry offers the promise of gross plant thermal efficiencies approaching 50% in the latter part of the decade. Since the gas turbine is air cooled, its increased use can significantly reduce heat rejection to receiving waters.

The replacement of the conventional Rankine steam plant with other forms of power generation is also receiving increased attention. It is anticipated that conservation of available energy resources will require larger expenditures in coal research and in the development of new power generation technologies which do not require fluid fossil fuel. These new generation technologies include solar generation, fuel cells, MHD and geothermal power. In the nuclear power field, the production of a demonstrator breeder reactor by the end of the decade will lead to higher thermal efficiencies in nuclear power generation.

The utilization of portions of heat contained in the discharge of condenser cooling water can reduce the amount of heat rejected from steam electric powerplants. There are two different ways in which power station waste heat can be beneficially employed by others. This first is to use the low grade heat contained in the condenser cooling water itself. Several small-scale projects for utilizing low-grade heat (mostly for agriculture and aquaculture purposes) will be described. Other uses for partially expanded steam (extraction steam utilization) for industrial process steam, space heating and cooling, and water desalting have been practiced at several locations in conjunction with electric power generation. The use of extraction steam methods generally involves a degradation of the power cycle since the steam at the extraction point has significant enthalpy remaining. Because of this loss of cycle efficiency, extraction steam utilization tends to raise the heat discharged as measured in Joules/kwh. It is necessary in evaluating this type of alternate use of steam to combine both the powerplant and the alternate use to determine the benefits derived.

The major weakness of most programs of low-grade heat utilization and single-purpose extraction steam utilization is that many of the alternate uses of the available heat are seasonal. This means that the additional costs associated with providing the steam distribution systems must be written off over relatively few hours during the year. It also means that the full amount of heat must be discharged to the waterway during those periods when the secondary heat consumers are not operating. This weakness largely defeats the purpose of employing low-grade heat utilization systems. The total energy concept seeks to overcome this shortcoming by aggregating all uses of heat in a region to fully utilize available energy on a year-round basis. Most total energy systems in this country are small, consisting of individual shopping centers, educational complexes and commercial developments. Larger total energy systems exist in Europe. It is felt that the rapidly increasing cost of energy brought about by greater worldwide competition for the earth's remaining fossil-fuel resources will make the total energy concept more attractive in the future. Several different waste heat utilization projects will be described.

A number of different technologies have been applied to condenser cooling water discharges to reduce heat rejected to the waterways. Three basic treatment options are available; open cooling systems, closed cooling systems, and combinations of the two. Open cooling systems discharge the full condenser flow following supplemental cooling. Closed

systems recycle the bulk of the circulating water flow back to the condenser following supplemental cooling and discharge a small fraction as blowdown to control salinity buildup in the system.

Open cooling systems employing evaporative cooling have the basic disadvantage of not being able to maintain a desired level of treatment year-round due to seasonal variations in wet bulb temperature. Open cooling systems have a distinct advantage over closed systems in that they do not affect the turbine backpressure. A closed cooling system can produce a low-level heat discharge year-round at the expense of increased turbine backpressures. Increasing turbine backpressure entails increased station cost above the cost associated with the cooling system. These additional costs are incurred to buy replacement power for those periods when the station (because of high backpressures) cannot produce its rated capacity (capacity penalty) and also to pay for increased fuel cost for less efficient turbine performance (energy penalty). Both open systems and closed systems require additional power to operate pumps, fans, etc., which affects station capacity and fuel cost to some degree. Incremental capacity and fuel costs are higher for backfitting existing units than for new units.

Most existing treatment of condenser cooling water has been designed to operate in a recycle mode. These systems have generally been installed where sufficient water for once-through cooling was unavailable. Some closed systems are designed to allow open system operation for a portion of the year. All of the available cooling water treatment technologies will be described in this section.

Process Change

Background

In order to properly understand both the problems and possible solutions regarding thermal discharges from powerplants, it is necessary to review a few essential thermodynamic principles. Only those principles that directly relate to the situation being investigated will be discussed. They will be presented in simplified terms, allowing a small relaxation of rigorous scientific exactitude.

The discussion is presented in three steps. First presented are principles, and then shown how they affect the steam electric powerplant cycle. Next, historic developments are reviewed, relating them to the principles. This is

Geothermal Steam

Geological conditions in certain locations provide a natural source of steam from the earth's heat. The steam can be used in a conventional power turbine. The thermal discharge rejected from the plant has less internal energy than the steam, so there is a net negative thermal discharge. However, the disposed waste heat could still be in an objectionable form and location. The use of this power source is practicably confined to only a few locations on the earth, and thus does not affect thermal discharges generally.

MHD

Magnetohydrodynamics (MHD) is a principle of producing power quite different from the steam cycle. An electrically conducting hot gas is moved at high velocity through a magnetic field, a procedure that directly generates electricity in a surrounding coil. The present status of this phenomenon for power production is in experimental development stages only.

Fuel Cells

The efficiency of a fuel cell is not limited to that of the Carnot cycle, as it does not receive its energy by means of conversion of heat energy to work. Energy is converted directly from chemical to electrical energy. Fuel cells have been commercially developed for certain applications in small power requirements, but at the present time there is no prospect for large units on the scale of steam powerplants.

Waste Heat Utilization

There are three ways in which heat produced by powerplants might be utilized in an alternate manner to reduce the amount of heat rejected to receiving waters. These alternate heat consuming methods are as follows:

- utilization of low-grade heat
- utilization of extraction steam
- total energy systems

Utilization of low grade heat

This process means the use of the condenser cooling water in the condition it is in as it leaves the condenser. Using low-grade heat in this manner is desirable because no modification to plant performance is required. The

disadvantage of this type of system is that the heat content of the condenser water that is useable is small and large volumes of water must be transported to get a significant quantity of heat. Of the several systems of low-grade heat utilization in operation or in various stages of development, most are agriculturally or aquaculturally oriented. The findings of some of these programs are discussed below.

Agricultural Uses

A considerable amount of related work has been planned by the Tennessee Valley Authority. TVA has set aside 72.8 ha (180 acres) of land at a major nuclear installation (Plant No. 0113) for the testing of various ways of using waste heat.

The initial effort at the TVA plant will be concentrated on the development of greenhouse technology for the production of high value horticultural crops utilizing the condenser discharge water for both heating and cooling. The information on these programs has been taken from Reference 353. Initial tests will include conventional greenhouse crops such as lettuce, tomatoes, cucumbers, and radishes. Later work will include such crops as strawberries for the fresh out-of-season market. Eventually, a mix of crops which fits well in sequence during the year with production and marketing conditions and which grow well in the greenhouse climate will be determined.

Preliminary calculations have been made of several crop combinations to obtain an estimate of the potential sale value per acre of greenhouse. The data indicate gross sale potential of from $40,000 to $60,000 per 0.405 ha (acre) per year is obtainable depending on crop mix. The savings in fuel cost alone in utilizing the waste heat in this manner may be upwards of $10,000 per 0.405 ha (acre) per year. Calculations show that the development of 13.0 ha (32 acres) of greenhouse tomato production and 23.5 ha (58 acres) of lettuce would utilize about 6% of the available condenser water at the plant, and provide about 1.4% of the total requirements for these products in the Southeast. The lettuce production would amount to 30 percent of that now shipped into the combined Atlanta, Memphis, Nashville, and Birmingham markets. TVA is also planning other projects for agricultural use of waste heat for subsurface heating of the ground, and also utilizing the greenhouse concept for the raising of pork and poultry. These programs are not very far advanced at this point.

A similar study of greenhouse use of waste heat has been performed by the AEC and is reported in Reference 351. This study centered on the use of waste heat from a new high-temperature gas-cooled reactor located in the Denver vicinity. The study concluded that the cost of equipment required to utilize the warm water was in the range of the cost of heating systems for conventional greenhouses. Since the cost of heating greenhouses in the Denver area is over $5,000 per year, the potential value of the heat being wasted is greater than $1,000,000 per year.

Aquaculture

The use of low-grade heat to improve the yields and productivity for fish and seafood species is called aquaculture. Basic data indicate that catfish grow three times faster at 28.3°C (83°F) than at 24.4°C (76°F). Similarly, shrimp growth is increased by about 80% when water is maintained at 26.6°C (80°F) instead of 21.1°C (70°F).

Several commercial operations of this type are in existence in the U.S. utilizing waste heat from powerplants. A commercial oyster farming operation is in existance on Long Island, N.Y. using the thermal effluent from powerplant No. 3621. Normal growing periods of four years have been reduced to 2.5 years by selective breeding, spawning, larvae growth and seeding oysters in the hatchery. This avoids reliance on variable natural conditions and permits accelerated growth in the thermal effluent discharge lagoon over a period of about 4-6 months when the water would otherwise be too cold for maximum growth. The product is marketed for $15-20/bushel (1971) which is the upper end of the wholesale price range.

Catfish have been cultured in cages set into the thermal discharge canal of a fossil-fueled plant (plant No. 4615) located in Texas. During the winter of 1969-70 growth rates achieved were equivalent to 200,000 lb/acre-year. This is comparable to the yields of rainbow trout culture in moving water. The Texas operation is now on a commercial basis.

TVA also operates a small-scale catfish raising facility at its waste heat complex. Results from the first year's operation confirmed that the growth rate of the catfish was significantly enhanced by the addition of the heated water and that the growing season was significantly lengthened. However, several problems prevented expansion to a commercial scale operation. Feed loss and mortality rates were high. Water quality studies showed that high intensity production of catfish generated substantial quantities of

waste material and that the equivalent of secondary treatment would be necessary before the facilities could be expanded.

The major weaknesses of low-grade heat utilization are the following:

1. Inability to utilize large quantities of total waste heat available. This is due not only to the capital requirement but also to the fact that the product is produced in such quantities that it may exceed market demand.

2. Uses are seasonal which require either the dumping of waste heat in the off season or the building of a cooling tower in addition to the waste heat utilization systems.

3. Inability to provide needed heat when plant is shut down and unadaptability of the cultured organisms to rapid temperature change.

Utilization of Extraction Steam

Extraction steam utilization increases both the number and the size of the potential heat users. Table B-VII-2 following shows the total annual energy demand by several types of heat using processes in the United States. The table is taken from Reference 24.

The most notable extraction steam heating system is located in downtown Manhattan, in which approximately 300 Mw of heat is supplied from extraction and back pressure turbines. This system has been in operation for many years. District heating systems of this type are expected to increase in usage in those places where it can be marketed successfully for operation of large tonnage air conditioning loads.

Extraction steam heat utilization is also used to supply industrial process steam. The classic case of extraction steam utilization for industrial process steam takes place at powerplant No. 3414 located in the Northeast. This plant supplies the bulk of the process steam to an adjacent oil refinery. The plant was designed with this capability in mind. The alternate utilization scheme increases the efficiency of the generation cycle from 34% to 54%. This is equivalent to reducing the waste heat rejected to the environment by 25%.

Another form of extraction steam utilization is the use of steam to desalt saline or sea water. This type of use is common in arid locations and also in many of the small islands in the Caribbean. Unfortunately, the quantities of heat consumed by water desalting processes are relatively small. The largest water desalting plant in operation today has a capacity of only 5.0 million gallons of water per day. This would require much less than 1% of the waste heat from a new 1,000 Mw nuclear plant.

The major disadvantage of extraction steam methods is the necessity of combining the plant and the adjacent steam utilizing process to determine the overall performance of the system. In addition, it is difficult to balance the often variable steam requirements with the power production process.

Total Energy Systems

The total energy concept seeks to overcome some of the obvious shortcomings of the low-grade and extraction steam utilization concepts by aggregation of all energy consuming interests in a well defined area. Most total energy systems in the United States are relatively small, consisting of individual shopping centers, educational complexes and industrial complexes. The total energy concept is practiced more intensively in Europe.

A major study conducted by the Oak Ridge National Laboratory, Reference No. 350, tested the economic feasibility of a large energy system serving a hypothetical new town of 389,000 people. The climate of the new town was similar to that of Philadelphia, Pa. The system provided in addition to electricity, heat for space heating, hot water, and air conditioning for the commercial buildings and portions of the apartment buildings. Heat was also available for manufacturing processes and desalting of sewage plant effluent for reuse. The study concluded that it would be possible in the 1975-1980 period and beyond to supply low cost thermal energy from steam electric powerplants to new cities, especially those in the population range of 200,000 to 400,000. With respect to climate, the cities could be located anywhere in the continental United States except perhaps in the most southern portions.

The use of thermal energy extracted for the turbines of the generating plants would be economically attractive. For example, in one configuration of a 1980 city with a population of 389,000 people and a climate similar to that of

COOLING-WATER SYSTEMS

Scale, corrosion, and fouling (including biofouling) of cooling-water systems have long posed challenges to chemists at industrial and utility powerplants. While corrosion has caused the greatest concern in the past, interest has focused increasingly on fouling because of cooling-system operation at higher temperatures and heat-transfer rates, longer periods between cleanings, and increased recycling of both water and wastewater. The effects of biological slime and widespread incursions of shellfish, in particular, have escalated interest in microscopic and macroscopic marine life.

The essence of cooling-water systems consists of plant heat-exchange components and the water that passes through them to remove heat from process fluids. Treatment begins with an understanding of the design characteristics of the cooling system itself. Basic types are the once-through, closed-recirculating (nonevaporative), and open-circulating (evaporative) systems. The principles of problem solving are essentially the same for all three.

Preventing scale

Scale on a heat-exchange surface occurs when soluble salts are precipitated and deposited from cooling water. The rate of formation depends mainly on the water's temperature, its alkalinity or acidity, and the amount of scale-forming material in the water. Scales occurring most frequently in cooling-water systems are listed in Table 12. They form in the following situations:

- When water temperature increases as it passes through a heat exchanger, causing a decrease in the solubility of dissolved materials like calcium carbonate. The deposits usually form first in the cooling-system heat exchangers, where the temperature is highest and solubilities are lowest.
- When bicarbonate alkalinity and calcium hardness of circulating water increases.
- When water becomes oversaturated with silica or any other scale-forming compounds.

Scale-control agents. To prevent formation of calcium scale in cooling-water systems: (1) Remove the calcium hardness

Removing suspended solids with clarifiers, softeners, filters

High-rate solids-contact clarifiers are widely used to remove suspended solids in makeup water. Clarifier effluent containing less than 10 ppm suspended solids is generally sufficient to eliminate source-water turbidity and is a factor limiting the cycling-up of the cooling system. Lime/soda softening will reduce the levels of calcium, silica, and magnesium, as well as suspended solids. Silica is most often limiting, as more than 125-150 ppm will result in silica deposits on heat exchangers. Softening will also help to prevent calcium sulfate scaling.

In practice, 5-15 cycles of concentration (COC) are attained in cooling systems using makeup treatment only. With the addition of sidestream softening and/or filtration, the ratio of makeup to blowdown volumes may be increased substantially. Both suspended and dissolved impurities are removed by a small side loop (usually 2-5% of the recirculating flow rate). Solids are removed more efficiently at the high concentrations of the recirculating cooling water than at the front end of the system.

Sidestream filtration is used either alone or in conjunction with makeup treatment (Fig A). Coagulants are not usually necessary, because no more than 25-50% of the solids need be removed to establish the desired level of suspended solids in the loop. Benefits are significant when slug feeding of biocides results in periodic suspended-solids excursions, and when entrapment of airborne dust is a problem.

High-rate clarifiers may allow much greater COC when applied to a cooling-tower sidestream. They are most often selected as warm process softeners (Fig B). Although the reactions entailed in softening may be inhibited by antiscalants and dispersants, the problem is offset by locating the sidestream softener on the warm side of the heat exchangers, where the elevated temperatures improve the kinetics and equilibria of softening and silica-adsorption reactions. Sidestream clarification and softening will permit nearly zero blowdown operation, where dissolved salts are removed only by wind drift of mists from the cooling towers.

Treated blowdown is a good source of makeup and demisting water for flue-gas-desulfurization scrubbers. Treated cooling-tower blowdown may also be used for bearing flushwater and pump-seal water, but care must be taken to monitor calcium carbonate deposition.

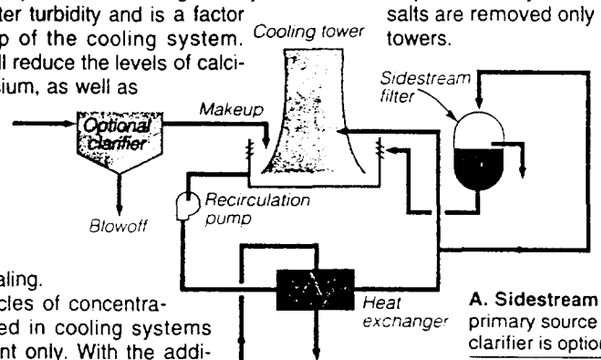

A. Sidestream filtration is especially useful where primary source of solids is external to makeup; use of clarifier is optional

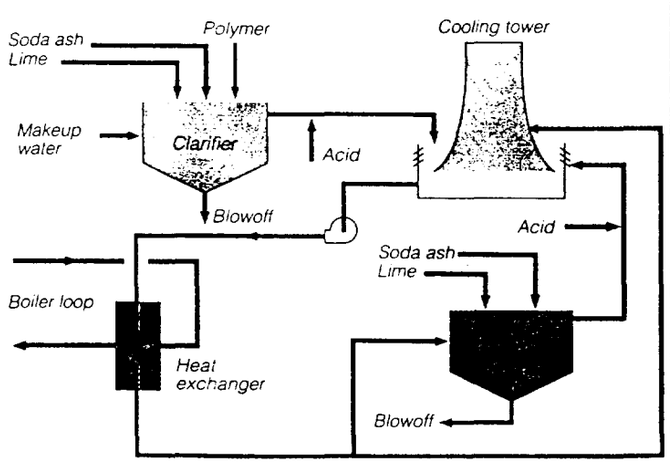

B. High-rate clarifier operates as warm-process softener in cooling-tower sidestream treatment loop to enhance cycles of concentration, approaching zero blowdown

or scaling mineral from the water before use, (2) keep the scale-forming constituents in solution with solubilizing chemicals, or (3) allow the impurity to precipitate as a removable sludge rather than as a hard deposit. Most direct is removal or reduction of scale-forming constituents by either lime-soda softening, ion exchange, or reverse osmosis, as in treating boiler makeup.

Leading scale-control agents and actions are summarized in Table 13. To control calcium and magnesium scale, acids or special chemicals (polyphosphates, etc) are added to increase their water solubility. Sulfuric acid is most often selected since it is least expensive, but hydrochloric, citric, and sulfamic acids are suitable. Acid salts are applicable to smaller cooling systems. Since fluctuations in acid-feed rate can produce widely varying pH levels, close control and uniform feed are essential.

Solubilizing chemicals are those specialty chemicals having the ability to keep scale-forming materials (primarily calcium-based) in solution at concentration levels substantially higher than might be expected. Unfortunately, silica scale can be prevented only by keeping its concentration in cooling water below its solubility limit, since there are no known silica-solubilizing chemicals.

Some solubilizing chemicals work for a limited period of time, while others are not time-dependent. The ones most commonly used today are polymeric organics and organic phosphorus compounds. The principal polymeric organics used for calcium-based cale are polyacrylates and modified polyacrylate compounds. Organic phosphorus compounds keep calcium salts in solution even at high pH values, at high scale-mineral concentrations, and under severe scaling conditions. Two types found in cooling-water treatment: phosphonates and phosphate esters.

Other solubilizing chemicals are the inorganic polyphosphates, such as hexameta, tri-poly, and pyro phosphate, which hold calcium scales in solution for a limited time. Low dosage levels can keep scale and iron oxides from forming. Unfortunately, polyphophates degrade to the orthophosphate form, which does not have solubilizing properties. Thus, inorganic polyphosphates are used in once-through systems when scale and iron need to be controlled. They are seldom used in recirculating cooling systems, never in closed systems.

Reacted phosphate is different from traditional forms of poly and ortho phosphate in its ability to provide mild steel corrosion inhibition under adverse conditions. It is designed to function in the most demanding situations, such as high heat flux, low-velocity heat exchangers. Also, the product functions across a wide range of pH and water quality, promoting rapid film formation during upset conditions. It meets industry's move to eliminate heavy-metal corrosion inhibitors, reduce phosphate residuals, and operate cooling systems at alkaline pH.

Crystal modification is growing in popularity. Two different classes of chemicals are quite effective as crystal modifiers —polymaleic acids and sulfonated polystyrenes. Both are synthetically produced and are classified as water-soluble polymers. Crystal-modifying chemicals act on scale-forming salts to produce a sludge, which is allowed to settle out in an accessible region, such as a cooling-tower basin. Or the sludge can be treated chemically to keep it fluidized until removed externally. Removal is effected by blowdown from the tower basin or by sidestream filtration.

Table 12: Scale occurrence in cooling-water systems

Most common	Less frequent
Calcium carbonate	Magnesium silicate
Calcium sulfate	Zinc phosphate*
Calcium phosphate	Calcium fluoride
Iron oxide	Iron carbonate
Silica (SiO_2)	

*From corrosion-control treatment chemicals

Table 13: Scale-control agents*

Agent	Control action: Solubilization	Dispersion	Crystal modification
Lignin/tannin		X	X
Starch/alginates		X	X
Acids	X		
Polyphosphates	X		
Phosphonates	X		
Phosphate esters	X		
Low-molecular-weight polymers	X	X	X

*Listed in sequence of historical introduction

Table 14: Foulants, sources, treatments

In water	In air	In the system
A. Naturally occurring foulants		
Mud and silt	Gases	
Natural organics	Dust/dirt (from soil)	
Dissolved solids	Vegetation (organics)	
Microorganisms	Microorganisms	
Macroorganisms	Macroorganisms	
B. Foulants produced artifically		
Coagulants	Sewage	Corrosion products
Flocculants	Gases (organic)	Inhibitor reactants
Phosphates	Ammonia	Process contaminants
Detergents	Hydrogen sulfide	Wood preservatives
	Sulfur dioxide	
C. Foulant-control-treatment types		
Dispersants		
Sludge fluidizers		
Surfactants		

Fouling control

Fouling control in cooling tems has become more import in recent years. Besides the rea mentioned, fouling is also g result of the increased incider quality water and recycling of v Moreover, fouling may also be corrosion products and by prod reaction with inhibitors, as well cess contamination.

Surface fouling results in heat-exchange efficiency and plugging. Corrosion also incre fouling prevents corrosion inhib reaching the metal surfaces. Fo trol is thus necessary not only t heat transfer but also to assist in control.

Insoluble substances found i sion in cooling water constitute t agents. They include matter that nally dissolved in the water but precipitated out under chemical Foulants occur naturally or are artifically (Table 14). Aside from ing entry of foulants into a syste first place, fouling of heat-excha faces can be controlled by mech removing the foulants or by chemi ment, such as dispersants, sludge ers, and surfactants. A combin mechanical and chemical prevent chemical-cleanup methods ha applied with great success.

Clarifiers and other solids se are mechanical devices that red amount of suspended solids (s previous page), debris, and so solved minerals and organics in r water. Filters are typically used filter a portion of the cooling w open recirculating systems—a tec called sidestream filtration. Cloth or screens at the tower air intak reduce airborne contaminatio effective method injects small balls into and through heat-exc er tubes during operation, w the tubes clean as they pass th

Dispersants function by bre the foulants up into smaller pa and keeping them suspended cooling water, thus preve deposit formation and enab foulant removal from the syste blowdown or filtration. Synt water-soluble polymers are the common dispersant chemicals rently selected, polyacrylates in ticular. Synthetic polymers repre a major improvement over nat polymers because they can be m to any specific molecular wei are not easily degraded by biol cal organisms, and do not react w chlorine or salts. Most importan they cost less for the same perf mance.

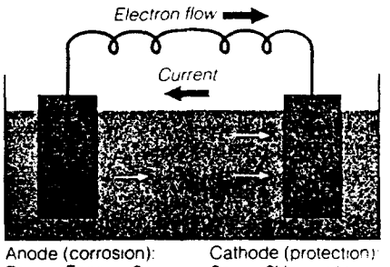

Anode (corrosion): $Fe \longrightarrow Fe^{++} + 2e^-$ (Eq 1)

Cathode (protection): $2e^- + 2H^+ \longrightarrow H_2$ (Eq 2)

50. Galvanic reaction occurs between two metals. The one higher in the Galvanic series will usually corrode

terparts, or else they have been effectively paired with oxidizing microbiocides for broader control.

Inhibiting corrosion

Corrosion is an electrochemical process by which metals return to their native state; mild steel, for example, changes to iron oxide. This is also true for copper alloys, zinc, aluminum, etc. In cooling-water systems, metal corrosion has resulted in the destruction of costly equipment, heavy deposition of the corrosion products, considerable downtime, and costly production losses.

Three basic types of corrosion attack are general, localized or pitting, and galvanic. The first describes the uniform distribution of corrosion over an entire metal surface. Localized or pitting attack occurs when isolated metal areas are corroded. Pitting is the most serious type of corrosion because all the corrosive action is concentrated in a very small area. Galvanic attack occurs when two different metals are in physical contact.

Aqueous corrosion of metal can be shown as a corrosion cell consisting of an anode, cathode, and electrolyte (Fig 50). Typical materials are steel, copper, and water, respectively. Metal ions dissolve into the electrolyte at the anode, and electrically charged particles (electrons) are left behind. These electrons make their way to the cathode, where they attach. The activity results in a loss of metal in the first action, and often the formation of a deposit in the second.

Anodic, cathodic inhibitors. Chemicals that perform as anodic inhibitors work by interfering with the anodic reaction shown in Eq 2, Fig 50. While they reduce anodic areas available on metal surfaces, they are rarely able to eliminate all potential corrosive regions. Since the reaction at the cathode is unrestricted, it provides a strong driving force, leading to rapid attack of the uninhibited anodic areas. Severe pitting is likely. Because of this, anodic inhibitors (Table 16) are called "dangerous" inhibitors.

Cathodic inhibitors are generally considered "safe" inhibitors because they do not promote pitting attack. In general, they function by reducing the amount of cathodic surface area available to corrosive action by creating a tight, corrosive-resistant film on the metal surface. In some cases, two or more cathodic inhibitors will form a tighter film than one alone; they can also be used in combination with anodic inhibitors for further protection. Key cathodic inhibitors are shown in Table 16.

Other inhibitors. Protection of closed recirculating systems generally features both high pH (between 8.5 and 9.5) and high inhibitor levels. With chromate inhibitors generally discredited, the most common non-chromate inhibitor is boron nitrate. It features borax as a buffering agent to maintain a pH above 8.5, and usually contains a variety of corrosion inhibitors that include sodium nitrite, sodium nitrate, sodium silicate, and copper-corrosion inhibitor.

Other corrosion inhibitors for closed systems include molybdate- and organic-based treatments, and hydrazine. The molybates often contain copper-corrosion inhibitors and occasionally nitrites, along with alkali buffering agents to maintain pH above 8.0. The organics make use of specialty polymers, lignins, phosphonates, and copper-corrosion inhibitors. Hydrazine is primarily an oxygen scavenger, although it also forms a protective oxide film. Since air inleakage will consume the hydrazine, constant monitoring and replenishment are needed.

Water reuse

In open recirculating systems, water reuse for makeup has excellent potential for savings in both water consumption and treatment chemicals. Plant effluents, boiler and tower blowdown, and steam condensate are candidates for reuse in cooling-water systems. Enhanced pollution control is an added advantage when "zero discharge" is included in the system design. These approaches constitute a growing trend in industry; if properly addressed, they do not threaten the steps taken to protect heat exchangers from corrosion and deposition.

Zero discharge—recycling of cooling-tower blowdown—entails maximizing the cycles of concentration of the cooling system, based on water chemistry and treatment chemicals (see box, below). Characteristically, the tower blowdown goes through a lime-softening process; reverse osmosis or ion exchange may also be appropriate. Softening is done to reduce hardness, silica, calcium, magnesium, and other dissolved and suspended solids. The treated blowdown is returned to the tower.

Although continued recycling necessarily raises the concentration of those soluble

Table 16: Leading corrosion inhibitors

Anodic	Cathodic
Chromate	Polyphosphate
Orthophosphate	Zinc
Nitrite	Molybdate*
Orthosilicate	Polysilicate

*Although anodic, acts like cathodic

Using ozone to treat cooling-tower water

An environmentally benign method of cooling-tower water treatment is ozonation. The use of ozone (O_3) as a sole treatment for tower water is emerging as a reliable alternative to traditional multi-chemical treatment methods because it effectively controls scale, corrosion, and biogrowth; conserves water and energy; and eliminates the use, storage, and discharge of otherwise necessary tower chemicals.

An allotrope of oxygen, O_3 is the strongest commercially available oxidizing agent. It has a very short half-life in cooling-tower water (measured in minutes), with simple O_2 as its decomposition product. This short half-life allows water treated with O_3 to be safely discharged into rivers, lakes, and streams without causing toxic effects. O_3 is not stored for later use; rather, it is immediately injected into the treated water as it is produced on-site by an O_3 generator. The only raw materials needed for generating O_3 are air and electricity.

In the corona-discharge method, O_3 is produced by passing dry air or O_2 between electrodes that generate a high-frequency electrical field (drawing). A portion of the O_2 in the gas stream is converted to O_3 according to this equation: $3O_2 + \text{energy} \rightarrow 2O_3$. Typically, a 1 to 2% concentration of O_3 is achieved with air as a feed source, 3 to 4% with O_2.

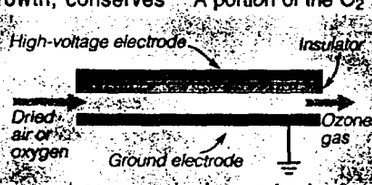

Mixing of cooling water with the on-site-generated O_3 gas is accomplished with a sidestream injection system and a remote monitoring system accessible by a computer equipped with a modem. Such site-specific requirements as water quality, flow rates, heat-exchanger skin temperatures, contact times, dosage rates, and the mixing regime and methodology must be considered.

Sludge fluidizers act to flocculate (agglomerate) fine suspended solids to form much larger particles. The chemicals currently used are usually high-molecular-weight water-soluble polymers. Often comprising polyacrylamides, they provide foulant-control action by agglomerating the suspended solids into non-adhering large particles that flow out of the system.

Surfactants and wetting agents are commonly used for oily or gelatinous foulants. They help to disperse oils, greases, and biological deposits in the cooling water so that these can be removed with the blowdown. Usually, they are low-foaming, non-ionic chemicals that are introduced as needed; they can also be added on a daily basis, since they assist in dispersing biological slime masses. When large amounts of oil are involved, emulsifying chemicals may be specified for rapid cleanup.

Biofouling protection

The presence and growth of organic matter can lead to plugged water passages, metal deterioration caused by underdeposit corrosion, and destruction of materials such as cooling-tower lumber. Biofouling takes two forms: microbiological fouling of heat exchangers, and macrobiological fouling of intake and discharge canals. The former is caused by both plant and animal organisms, such as algae and bacteria, while the latter problem stems primarily from invertebrate life—mussels, clams, etc. The threat is presented by uncontrolled growth of these organisms.

Mechanical, thermal methods. Protection against biofouling falls into three broad categories: mechanical, thermal, and chemical. Mechanical methods for preventing organism entry into cooling-water systems are long-standing, and effective primarily against macroscopic life forms. They include trash racks, bar and traveling screens, and strainers in various designs, combinations, and opening sizes. In the long run, the most effective mechanical control method is a direct, after-the-fact approach—the use of sponge balls, scrapers, and brushes.

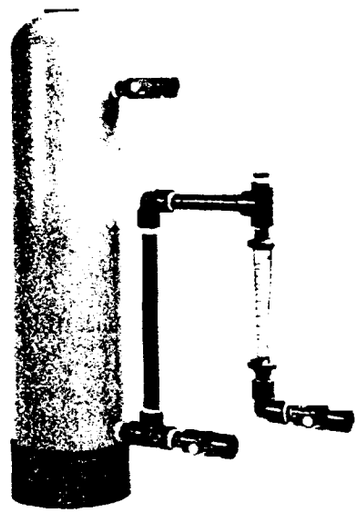

49. Brominator feeds proper amounts of granular or solid bromine and other solid biocides for cooling-system treatment

For biota escaping screened intake barriers, two further methods are available. One is flushing by flow reversal through condenser waterboxes. Condensers featuring hydraulically operated reversing gates can alternate coolant-flow direction to achieve on-line flushing action. Temperature elevation is the other approach, possibly combined with the first in a thermal-backwash procedure. Its use is based on the fact that some shellfish can be killed when exposed to temperatures above 105F for at least two hours.

Chemical treatment—that is, microbiocides—is effective against microorganisms; the only questionable aspect is the possible environmental effect of treatment chemicals that persist beyond plant boundaries. Some microbiocides alter the permeability of microbe cell walls, theret fering with vital life processes. (microbiocides, such as the qua ammonium compounds (Table 15) onto the cell membrane and che react with the negative charge ass with the cell wall. Conversely, anio factants reduce cell permeability an tually dissolve the entire membran chemical agents, such as the organ compounds, inhibit microorganism

Chemicals used are either oxidi non-oxidizing. Of the oxidizing cals—those that irreversibly oxidi tein groups, resulting in loss of enzyme activity—chlorine is th familiar and effective. Chlorine tives are the "chlorine-minimizatior niques, which optimize operating e cies while limiting chlorine levels effluent to limit the environmental of escaping residual chlorine. "Ch dechlorination" has been an attracti sibility for controlled chlorine use. als proposed for this purpose i activated carbon, sodium sulfite, thiosulfate, and SO_2, which is th viable.

Alternative oxidizing chemic chlorine dioxide, bromine chloride, nated bromine salts, and brominated onamides. However, all these com are considerably more expensiv chlorine. Brominator (Fig 49) feeds amounts of granular or solid bromi other solid biocides for water treatn cooling towers and other circulatir tems. With fiberglass bodies and PV ing, these systems are corrosion-re and virtually maintenance-free.

Of the non-oxidizing chemicals able, chlorinated phenolics, orga compounds, quatenary ammonium organo-sulfur compounds, methyle thiocyanate, copper salts, amine isothiazolinone are selected, depend the application. In some situations non-oxidizing toxicants have provec more effective than their oxidizing

Table 15: Effectiveness, characteristics of microbiocides against fouling mechanisms

	Bacteria						
	Slime-forming						
Microbiocide	Spore formers	Non-spore formers	Iron-depositing	Corrosive	Fungi	Algae	Comments
Chlorine	+	+++	+++	0	+	+++	Oxidizing, dangerous to handle, corrosi metals; powder, gas, or liquid; delignifies tower wood; loses effectiveness at highe
Quaternary ammonium salts	+++	+++	+++	++	+	++	Foams; cationic
Organo-tin plus quaternaries	+++	+++	+++	+++	++	+++	Foams; cationic
Methylene bis-thiocyenate	+++	+++	++	++	+	+	Not effective at pH above 7.5; non-ionic
Isothiazolones	+++	+++	++	++	++	+++	Dangerous to handle; loses effectivenes pH above 7.5; non-ionic
Copper salts	+	+	+	0	+	+++	May cause copper plating
Bromine organics	+++	+++	+++	++	0	+	Hydrolyzes, must be fed directly from drum
Organo-sulfur	++	+++	++	++	++	0	Toxic effluent; reduces chromate; anionic

Key to effectiveness rating: +++ Excellent; ++ Very good; + Slight; 0 None

salts not removed in the softener, which can lead to higher corrosion and scaling if unaccounted for, a considerable amount of treatment chemicals also passes through the softener and is recycled with the water. These chemicals include molybdate, nitrate, nitrite, and copper-corrosion inhibitor, which provide much of the needed protection. Because blowdown recycling thus reduces the need for makeup and the associated treatment requirements, the overall effect is to reduce treatment-chemical cost considerably—as much as 80% in some recorded cases.

Silica can occur at extremely high levels in well-water supplies, which often limits water reuse in cooling-tower systems—150 ppm is generally recognized as the maximum allowable silica level to avoid its deposition in the cooling system.

At a California zero-discharge facility, the criterion for success was the ability of the system to operate safely at an average cycles of concentration (COC) of 6.6. To achieve this, it was expected that conductivity control of the tower water would maintain COC between 6.0 and 7.2. At 7.2 cycles, the tower water contains 260-ppm silica and 610-ppm magnesium (both as $CaCO_3$).

Tests showed the program could maintain silica stabilization, and that temporary loss of product feed or pH control did not lead to silica deposition. Corrosion/deposit control based on stabilized-phosphate technology was selected because it was easy to implement and required minimal changes in operating instructions.

Alkaline programs. Under the impetus of environmental concerns and emphasis on water reuse, alkaline-treatment programs for recirculating-water systems are becoming increasingly attractive. They also avoid (1) the safety hazards associated with handling concentrated acid, and (2) the adverse effects of under- or overfeeding. New polymers provide more effective treatment under high-calcium and -alkaline conditions, and corrosion inhibitors that would normally precipitate can be conditioned to remain in solution.

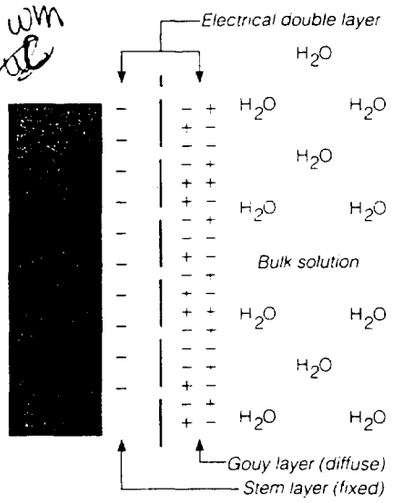

51. Anionic polymers provide the most effective treatment for cooling-water systems

As a guide for program selection, a comparison of three generic alkaline-treatment programs was made on mild steel and brass coupons exposed to water flowing at 3 to 5 ft/sec and achieving surface temperatures up to 205F; pH ranges were 8.0-8.5 and 8.5-9.3. The programs:

- All-organic, using an organophosphorus blend, yellow metal corrosion inhibitor, and carboxylated copolymer. Mild steel exhibited 3.1 mil/yr corrosion and mild pitting at the lower pH, 1.5 mil/yr and no pitting at the higher pH; brass corrosion was acceptable.
- Alkaline-metal, featuring molybdates, plus an organophosphorus blend and scale-control polymer. This produced somewhat lower corrosion (2.0 and 1.1 mil/yr) and no visible pitting, with acceptable brass protection.
- Inorganic phosphate, using a polymeric solubilizer. While excellent protection was realized, possible precipitation of tricalcium phosphate and non-uniform film formation with conventional phosphate programs necessitate high treatment levels in these alkaline environments.

In practice, treatment selection depends on specific plant operating conditions and priorities. The proper corrosion inhibitor, organophosphorus compound, and deposit-control polymer are the result.

Dispersing muds, silts

Recognizing the roles that particle size, surface charge, zeta potential (produced by shearing action), and solution concentration play in dispersion of muds and silts, anionic polymers provide the most effective treatment for cooling-water systems. These anionic treatments work by attaching themselves to the fixed, positively charged Stem layer (Fig 51), resulting in an increased electrokinetic potential that stabilizes the colloidal dispersion.

One reason for the effectiveness of anionic polymers is that they increase the charge density of the particles. Since anionic polymers, such as polyacrylic acid, contain localized areas of high, negative-charge density, a particle that has an anionic polymer adsorbed on its surface has a greater overall negative surface charge. Such a particle repels other particles with high, negative-charge densities more effectively than an untreated particle.

Copolymers. Unfortunately, polyacrylic acid also interacts with multivalent cations, such as calcium and iron, resulting in neutralization or insolubilization of the polymer. Modern synthesis techniques, however, have allowed chemists to make modifications to the basic polyacrylic acid molecule. The use of novel monomers with acrylic acid have led to copolymers and terpolymers with vastly improved dispersion properties and cation tolerance.

Copolymer structure is specified by the mole ratio of monomer units comprising the polymer. Different monomers can be arranged in the polymer molecule randomly or with regularly repeating patterns to give several structures with differing properties. Synthesis techniques allow varying degrees of control over these propeties of copolymers.

Sludge processing. System in Fig 52 removes and processes sludge from cooling-tower basins, ponds, and other surface impoundments. Sludge treatment is based on the use of two-phase, high-speed centrifuges for solids removal. A dry-polymer injection system reduces polymer consumption by more than 75%, while allowing treatment on-line. If hydrocarbons are present, they are decanted in a series of post-centrifuge settling tanks, where oil and water clarity can be verified before dispatch. The system yields solid cake in the 35-40% solids class (by weight).

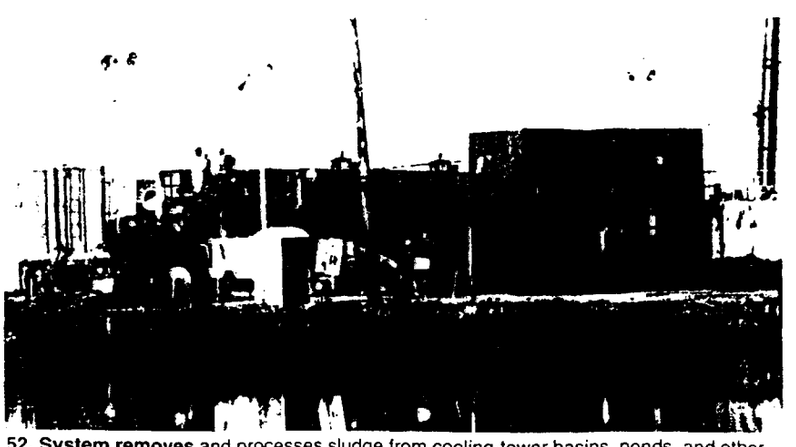

52. System removes and processes sludge from cooling-tower basins, ponds, and other surface impoundments

PRETREATMENT

The stage is set for review of techniques used to provide the water purity needed to ensure reliable steam production and cooling. For boiler feedwater, the focus of this section, time and experience have made demineralization the industry standard, with few exceptions. In practice, a variety of "pretreatment" steps are applied to makeup waters to remove the bulk of troublesome solids, ions, and gases that can interfere with demineralizer operation, reducing its effectiveness and throughput of high-purity water.

Pretreatment options include sedimentation, clarification, filtration, softening, oxidation, degasification, chlorination, and evaporation. These are selected and applied in combinations and sequences dictated by specific water characteristics, boiler and afterboiler system requirements, etc. Many parameters are involved in the system design, introducing considerable complexity.

Sedimentation and filtration, for example, are traditionally applied to suspended organics—relatively large particles with diameters of about 10 microns or more. Preparatory coagulation and flocculation of solids may be necessary to adapt these methods to colloids—particles smaller than about 10 microns, held in suspension by mutual repulsion—with carbon adsorption and ion exchange providing possible alternatives. Oxidation offers a familiar alternative for removal of organics, particularly from some wellwaters, and membrane treatment a less familiar approach (discussion below).

Oxidation is often the starting point for a pretreatment program. This step makes use of either chemical additives or aeration devices to convert soluble gases and solids to insoluble form. Chlorine, either as a gas or in hypochlorite form—has been the customary oxidizing chemical, with hydrogen peroxide seeing some use. Typical reaction is conversion of dissolved iron to ferric chloride, removable by clarification or filtration. Here, as for handling of all impurities, careful analysis and design selection are the basis of treatment-system optimization.

Note that chlorination oxidizes organic matter and makes it more readily coagulated and filtered, preventing fouling of demineralizers. Treatment depends on many factors—water source, flow, temperature, bioform concentrations, etc. The goal is to produce sufficient residual oxidant long enough to complete its task; limiting the residual to 0.5 ppm (excess over stoichiometry) ensures protection of downstream equipment.

Aeration has two primary applications. One is oxidization of dissolved iron and manganese to form insoluble hydroxides. Precipitated at proper pH level, these can be settled or filtered out. (This is an alternative to processes based on ion exchange, discussed below.) Second use is for stripping dissolved gases like hydrogen sulfide and CO_2 from solution, with the aid of pH adjustment.

Simplest method is embodied in a degasifier or decarbonator, in which air bubbles diffuse upward through water in a holding tank; air is forced in by blower for larger flows (Fig 4). Air flows countercurrent to falling water, which is divided into small streams by horizontal trays or packing. Both air and gas scrubbed from water are vented at top. In aeration towers, an alternative, water percolates downward over trays containing coke or other packing material (Fig 5); oxidized metal precipitates on fill, acts as catalyst to oxidize and remove additional metal from water contacted. While pressurized aeration is more effective for iron and manganese removal, it increases O_2 addition to process water.

Both chlorine and O_2 usually require removal from treated water before contacting equipment sensitive to chlorine and oxidation products. This is usually done by adsorption on columns packed with activated carbon, especially for chlorine. (Injection of sulfur dioxide for chlorine reduction has been suggested as an alternative to avoid formation of chlorinated hydrocarbons.)

Deaeration to remove O_2 as well as CO_2 is generally accomplished by two types of equipment, deaerating heaters and vacuum deaerators. Former are used when heated water and more efficient action are essential, as in boiler-feed preparation (see section, "Boiler Systems"). Vacuum deaerators find frequent use in protecting anionic demineralizer resins from damage. Deaerators make use of steam-jet air ejectors or mechanical vacuum pumps to create the required vacuum—usually about 29 in. Hg. O_2 residuals are approximately 0.2 ppm; CO_2 is reduced to 2-10 ppm, depending on initial content and water temperature.

Two newer techniques involving catalyzed reactions of O_2 with hydrogen to

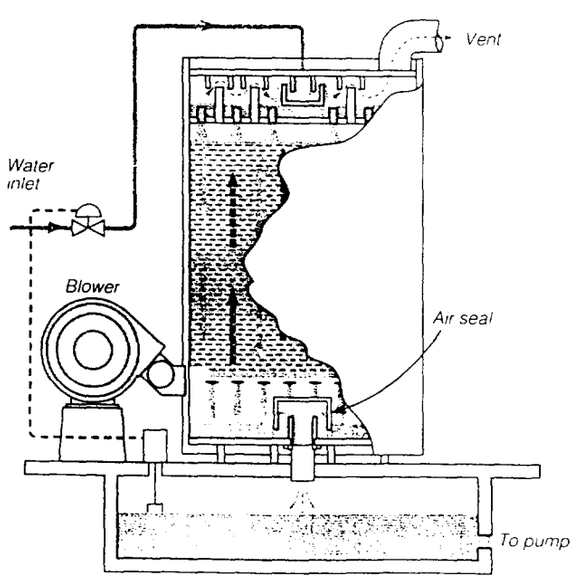

4. Forced-draft decarbonator (left) blows air stream through packing countercurrent to downflowing water to strip out CO_2; air and gas are vented at top

5. Oxidized iron and manganese precipitate on fill as water percolates through trays in aeration tower (below), catalyze removal of additional metal from downcoming water; oxide is removed later by filtration

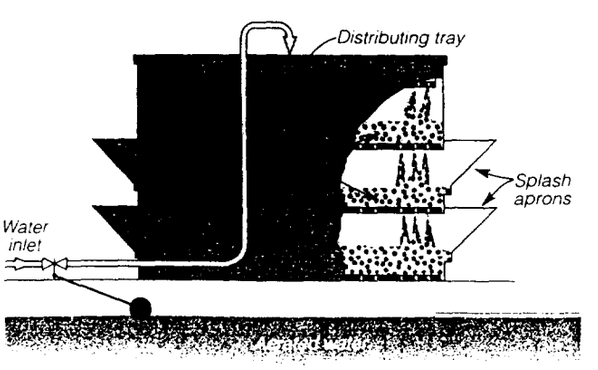

form water are reported to produce much lower O_2 residuals. In one approach, used at several nuclear stations since the mid-1980s, hydrazine—a common O_2 scavenger—is injected into to a water stream (either makeup or condensate) that is passed through a bed of activated carbon. Method is reported to reduce influent O_2 levels from 10 to 12 ppm to less than 10 ppb. A newer method, developed in Germany, uses hydrogen gas as the additive and passes the stream through a bed of palladium-coated resin, which acts as the catalyst; O_2 reductions from 8 to 10 ppm to 1 ppb or less are reported.

Clarification—removal of turbidity and sediment—is applied early in the pretreatment sequence to provide essentially clear and colorless water. (While aeration is often integrated with clarification, some systems feature it as a separate process. Also, lime softening may be combined with clarification in a single unit, as discussed later.) Coarse particles generally settle rapidly. Economic removal is sometimes accomplished by flowing water through a basin at velocities low enough to let sand and silt settle. This happens naturally in many stream-fed ponds and lakes if the water is quiet enough. Large suspended particles settle out, leaving overlying water clear if not always colorless.

Powerplant needs, however, generally call for specially designed equipment and the use of chemical coagulants to hasten settlement. Sedimentation tanks and clarifiers serve this purpose (Figs 6-8). Filters are also used to remove suspended matter: In fact, if water turbidity is not excessive, filtration assisted by inorganic coagulants or a coagulant-aid polymer can sometimes handle the job alone. On the other hand, there are times when water from the settling tank does not require filtration in a subsequent step.

Chemical coagulants work by gathering finely divided or colloidal solids together to form larger masses, accelerating their settling or removal by filtration. In the range of sizes found in natural waters —about 0.1 to 10 microns—suspended solids resist agglomeration because of the presence of ionic groups of similar electrical charge on their surfaces, which create mutually repellant forces. To achieve coagulation, these charges must be at least partially neutralized.

Surface charges on particles are usually negative. This attracts a compact layer of oppositely charged ions in close proximity, and a more diffuse layer of opposite charges somewhat farther away (Fig 9, left). Combination of the two layers forms an electrostatic potential—the "Zeta potential"—around the particle, which serves as a barrier to other particles. This barrier must be overcome if particles are to agglomerate.

Addition of a chemical coagulant (Table 3) is the instrument for this. It involves introduction of a positively charged heavy-metal ion, such as aluminum or iron. As we saw earlier, valence of these metals when ionized is greater than that of the sodium ion. Thus, one aluminum ion will form a bond with three OH ions. Result is that one aluminum ion will displace three negative ions from the diffuse layer, effectively reducing the size of the layer and the potential barrier. Particles then find it easier to overcome the barrier, allowing mutually attractive forces to coalesce them into larger particles. During this phase, it is essential to agitate the fluid strongly. Only in this way can the heavy-metal ions be brought close enough to the particles to effect the ion interchanges.

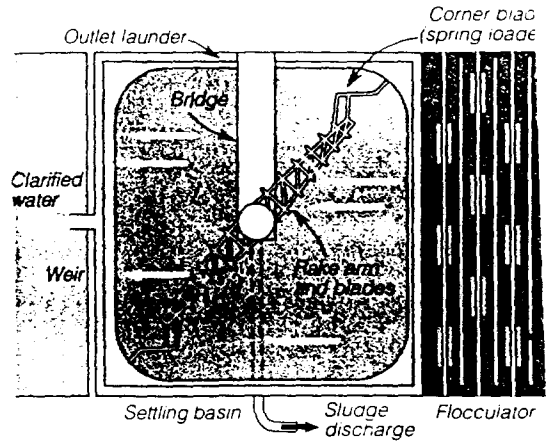

6. Horizontal tank comprised the earliest clarifier type. Entering water is mixed rapidly with coagulant, then gently with dispersed precipitates to promote growth into larger floc to enhance settling in adjoining basin. Clarified water exits through collecting flume, while settled solids are raked inward to central hopper for discharge

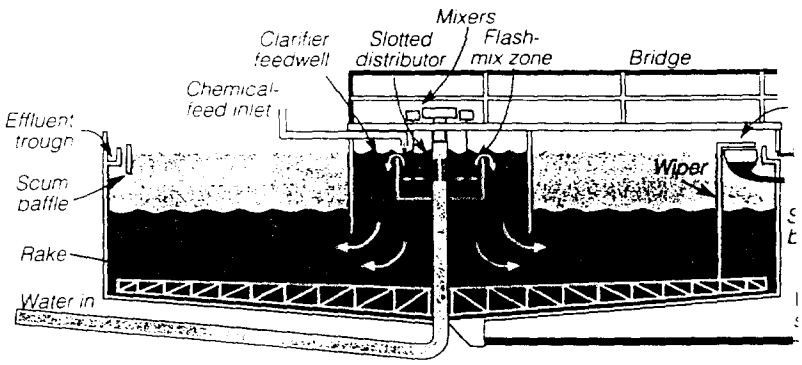

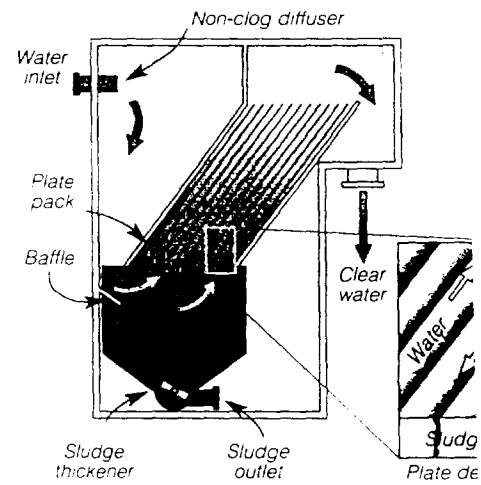

7. Mixing and coagulation are combined in single unit shown. Polymer addition to rapidly moving water at center produces initial flocculation; velocity drops in clarifier feedwell for additional floc growth. Contact with solids "blanket" before discharge optimizes turbidity removal

8. Inclined plates can be added to existing unit to reduce settling distance and time, or used in self-contained "vertical" clarifier shown here. Design offers space economy, increased throughput

Once this is complete, the water is for the next step: flocculation. describes the further increase in pa size of finely divided suspended mat is accomplished by gentle stirring water to improve contact between pa for further agglomeration. Adding a molecular-weight polymer can enhan process: The long-chain molecules a on particle surfaces, physically pu them together into heavier masses for settling (Fig 9, right). While their pres is not essential, they make clarifica possible with smaller equipment.

Aluminum compounds, especi alum and sodium aluminate, are the widely used coagulants. They precipit

Table 3: Many chemicals find use in water clarification

Chemical	Application
Chlorine, Cl_2	Disinfection; slime, algae, taste, and odor control; silica activation; oxidize organics
Chlorine dioxide, ClO_2	Disinfection; taste and odor control; oxidize organics
Potassium permanganate, $KMnO_4$	Slime and algae control; oxidize organize
Ammonium alum, $Al_2(SO_4)_2 \cdot 24H_2O$	Coagulation
Polyaluminum chloride	Coagulation
Aluminum sulfate, $Al_2(SO_4)3 \cdot 18H_2O$	Coagulation
Sodium aluminate, $Na_2Al_2O_4$	Coagulation
Sodium silicate, $Na_2O \cdot SiO_2$	Coagulation (also corrosion control)
Ferric sulfate, $Fe_2(SO_4)_3$	Coagulation
Ferrous sulfate, $Fe_2SO_4 \cdot 7H_2O$	Coagulation
Ferric chloride, $FeCl_3$	Coagulation
Bentonite (clay)	Coagulant aid
Calcium hydroxide (lime), $Ca(OH)_2$	Controls pH, reduces hardness
Magnesia, MgO	Coagulant (pH above 9.5)
Magnesium sulfate, $MgSO_4$	Coagulation
Magnesium chloride, $MgCl_2$	Coagulation
Organic polymers (polyelectrolytes)	Coagulation, coagulant aids

relatively tough, heavy aluminum hydroxide floc that has remarkable ability to entrap suspended solids and remove them from water. Iron salts, such as ferric sulfate, precipitate ferric hydroxide floc over a wide range of pH values. But for each specific use, pH must be properly adjusted and closely controlled. In practice, this is done by feeding an acid, or an alkali such as lime, soda ash, or caustic soda. Clay, activated silica, organic polyelectrolytes, and other aids are used to foster coagulation and flocculation. In general, coagulant aids help produce larger and heavier floc particles over wider pH ranges with greater ability to remove turbidity rapidly.

Alum reacts with soluble alkalis to form aluminum hydroxide. This compound is practically insoluble over the pH range of 5.7 to 7.5. It dissolves when pH drops below 5.7 (to form Al^{-3} ions) and when it climbs above 7.5 (to form AlO_3^{-3} ions). Thus, the useful insoluble compound forms best in the pH zone between these limits. From a chemical standpoint, coagulation with alum depends on both the water analysis and the pH after adding alum.

When there is natural alkalinity in the water, aluminum sulfate (filter alum) hydrolyzes into aluminum hydroxide, liberating sulfuric acid. This reacts with alkalinity to form calcium sulfate and carbon dioxide. Each ppm of added alum consumes about 0.5 ppm of natural alkalinity, reducing the pH level.

To counteract reduced pH and assure coagulation, lime or soda ash is added at the rate of 0.4 ppm of lime (90% calcium hydroxide) or 0.5 ppm soda ash for each ppm of alum. Actual amount added is controlled to give the best pH value for the particular supply of water.

Amount of alum needed under a given condition is almost impossible to predict. Only practical way is to run field jar tests under actual operating conditions and find best dosage by trial-and-error. Actual amount will vary with size and quantity of suspended matter, retention time prior to coagulation, water temperature, amount of mixing, etc. Optimum dosage one day may not be correct the next.

Since sodium aluminate is slightly alkaline, it may be added with alum for low-pH coagulation. More often, it is combine with lime and soda ash in a softener fc coagulation at high pH. Sodium aluminat reacts with calcium bicarbonate, precipitat ing calcium carbonate from the solutio and producing aluminum hydroxide flo (It also reacts with magnesium, precipitat ing magnesium aluminate and $Mg(OH)_2$ This floc envelops particles of both precip itated calcium carbonate and suspende matter, for easy settling and removal.

There are no simple rules to guide selec tion of a coagulant, coagulant aid, coagu lant dosage, or pH range. Too mucl depends on the water analysis, temperatur of water, type of clarification equipment load conditions, and end use of the treatec water. But a few simple tests conductec under actual operating conditions wil point the way to best results at lowest over all treatment cost.

As in any process configuration, pro cess and equipment alternatives are avail able for pretreatment. Horizontal sedimen tation unit (Fig 6), the earliest clarific type, used chambers in sequence for rap mixing of water with coagulant, gen stirring for agglomeration, then final se tling. Space limitations led to developm of equipment combining all three proces es (Fig 7). Initial mixing, flocculation, and agglomeration occur in successive concentric regions in circular unit shown; subsequent contact of treated water with preformed solids enhances degree of agglomeration. Finally, the vertical clarifier with slanted plates maximizes the settling surface to speed turbidity removal, while minimizing space requirements (Fig 8).

Chemical precipitation of calcium and magnesium, customarily a succeeding step, is sometimes combined with clarification. This also applies to aeration. While most clarification systems aim at producing a large floc, which can be settled out in a basin, as described, some go no further than forming a finer floc, which can be removed by an appropriate filtration system. By eliminating the large settling basin, these can produce high-clarity water more quickly in smaller equipment.

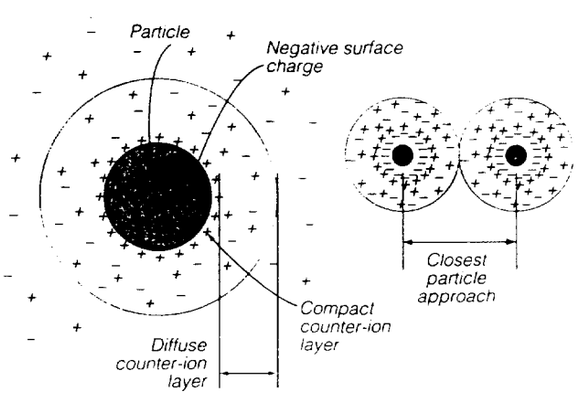

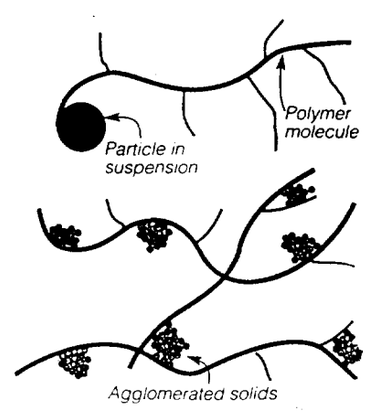

9. Natural electric surface charge creates repulsive force between suspended particles, limiting agglomeration into larger particles for settlement (left). Chemical coagulant neutralizes charge, reduces potential barrier, facilitating coalescence into floc (right). Long-chain polymers attach to floc sites, enhance growth by chemical bridging

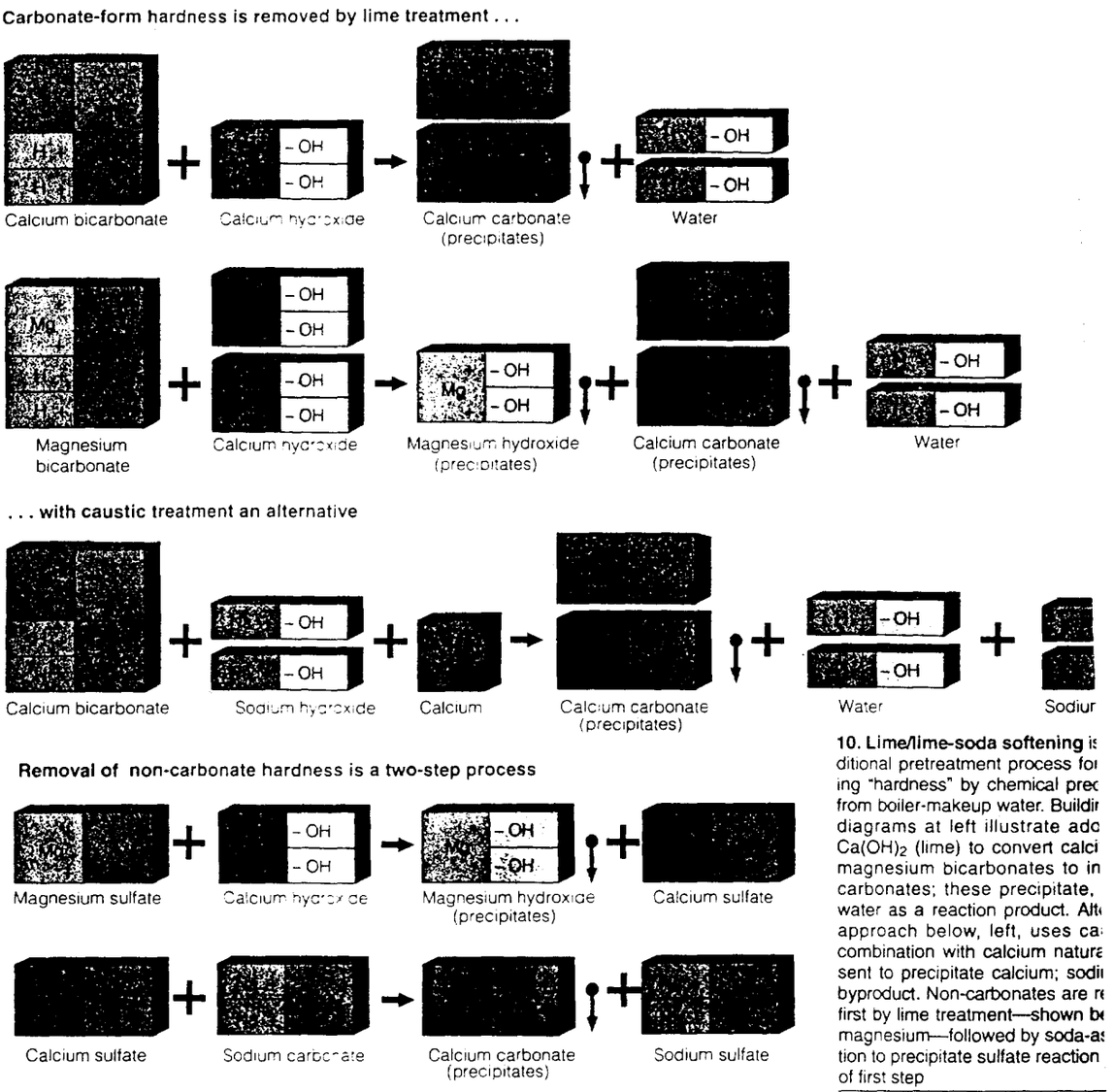

10. Lime/lime-soda softening is ditional pretreatment process for ing "hardness" by chemical prec from boiler-makeup water. Buildi diagrams at left illustrate adc $Ca(OH)_2$ (lime) to convert calci magnesium bicarbonates to in carbonates; these precipitate, water as a reaction product. Alt approach below, left, uses ca combination with calcium natura sent to precipitate calcium; sodi byproduct. Non-carbonates are r first by lime treatment—shown b magnesium—followed by soda-a tion to precipitate sulfate reaction of first step

The vertical clarifier was shown to be a space-saving option, but requires that flocculation be done just upstream of the unit. An entirely different approach bypasses the conventional coagulation/settling/filtration sequence with a combination of microstraining, ozonation, limited coagulation dosage, and sand filtration. The microstrainer, featuring woven stainless-steel wire on revolving drums with continuous backwashing, removes all suspended matter larger than a few microns. Fluid is then subjected to ozonation, which destroys bacteria, removes taste, odor, and carbon dioxide, and breaks down remaining colloids and color bodies to form filterable floc or no turbidity at all. In the former case, coagulation must be induced, followed by filtration.

Aeration was yet another step with associated alternatives and considerations. In fact, in making treatment choices, it exemplifies the need for awareness that each treatment step can have a strong effect on subsequent steps. Thus, aeration may be needed to remove CO_2 produced by acid treatment of boiler feedwater to reduce alkalinity. Similarly, deaeration may be necessary subsequently, to remove oxygen introduced in this step.

Softening by precipitation

Makeup water is "softened" to prevent various dissolved solids from settling on component surfaces and producing a hard scale. Although the term commonly designates removal of calcium and magnesium hardness, silica, alkalinity, and other constituents are also removed in softening. Available methods make use of precipitation, ion exchange, or semi-perm membranes, the choice depending on factors: impurity types and concentra boiler operating pressure, use of co sate returns, etc.

Chemical precipitation is appli both boiler makeup and cooling w Lime softening of makeup wate enjoyed wide practice. Though decl somewhat with the trend toward hi boiler pressures and because of diffic in handling lime, maintaining pro equipment, and disposing of process w it is common at industrial plants with ers operating at low to intermediate p sures. The method removes impuritie chemical reaction with lime, sodium bonate (soda ash), and caustic (sod hydroxide). Primary result is precipita of calcium hardness as calcium carbon

magnesium also precipitates as a carbonate. Bicarbonate alkalinity is converted to the carbonate form, then removed as calcium carbonate. (Reactions are depicted graphically in Fig 10.)

Removal of silica and suspended solids is also accomplished in the process: Reaction of silica with magnesium hydroxide converts it to an insoluble silicon/magnesium complex, while turbidity resulting from suspended solids and magnesium hydroxide as well as calcium carbonate sludge is removed by settling followed by filtration.

When carried out at ambient temperature, the reaction is termed cold-process (or partial) softening. It is done in units like that shown in Fig 11, upper sketch, or in combined clarifier/softeners. Latter are typified by Fig 11, lower sketch, which features sludge recycling to increase solids contact for enhanced precipitation. Units operate continuously, requiring detention times of 60 to 90 minutes.

Operation at elevated temperatures reduces chemical solubilities, improving process efficiency. This is done by heating the wellwater above room temperature, usually to at least 212F. Note that calcium and magnesium occur primarily as bicarbonates; most of the calcium and some of the magnesium can be eliminated by boiling, which volatilizes CO_2; remaining carbonate precipitates. This results from the fact that combining water with free CO_2 produces carbonic acid, which reacts with calcium carbonate to form calcium bicarbonate.

If enough CO_2 is present, all carbonate hardness will convert to soluble bicarbonates. Otherwise, the water will then contain both carbonate and bicarbonate forms. All CO_2 in the carbonate radical is said to be firmly bound, plus half that in the bicarbonate. When heated to evaporation, it is the half-bound CO_2 that comes off while the bicarbonate is converted to carbonate form.

Hardness may also be present in non-carbonate form—sulfate, chloride, or nitrate. These are not precipitated by heating, and any calcium remaining when water is evaporated forms a hard scale. To see how non-carbonate hardness precipitates, you must understand the property of solubility—the maximum amount of solid matter that can be dissolved in water. Thus, if salt is added to water and stirred, it dissolves up to a certain point, after which no more salt goes into solution.

If the solution is then evaporated, the salt remaining represents its maximum solubility at the ambient temperature—say, 3 lb/gal. If a solution contains less than this concentration, nothing happens during evaporation until a concentration of 3 lb/gal is reached.

Continued evaporation beyond this point causes salt to start precipitating. Thus, evaporation—or boiling—results in precipitation when the solubility of the substance is exceeded. If several substances are dissolved in the same solution, the reaction is more complex. Suppose a compound is already in solution, and a second one that is completely soluble by itself is added. The two may react chemically; if one product of the reaction is less soluble than either of the two original compounds, it will precipitate from the solution because of the chemical change.

Inorganic chemicals dissociate into charged ions as they dissolve in water. As an example, calcium sulfate separates into ions of calcium (positive) and sulfate (negative), and sodium phosphate forms sodium (positive) and phosphate (negative) ions. When both are present in water, prediction of the resulting reaction requires that we know not only their own solubilities but those of their reaction products, sodium sulfate and calcium phosphate. The solubility product of the various ion combinations is used to determine which compounds will precipitate, if any.

In this example, the solubility of calcium sulfate is 1.07 grams per liter (g/l Dividing 1.07 by 136, the molecul weight of the compound, gives the gra molecular weight of 0.0079 each for cal um and sulfate. Multiplying the two giv 6.2×10^{-5} as the solubility product. This much greater than 3.5×10^{-19}, the solubi ty product of calcium phosphate. In boile treated with phosphate, therefore, calciu ions precipitate as calcium phospha rather than as calcium sulfate; latter w not precipitate as long as there is exce phosphate present.

Treatment chemicals are generally us to lower the solubility product of scal forming impurities and precipitate them a sludge. Lime and caustic break dow bicarbonate ions ($[HCO_3]^{-1}$) into wat molecules and carbonate ions ($[CO_3]^{-2}$ Thus, for lime treatment:

$$Ca(OH)_2 + Ca(HCO_3)^2 = 2CaCO_3 + 2H_2$$

Resulting carbonate will then precipita with calcium ions naturally present in t water or added from the lime. Similarl with caustic addition:

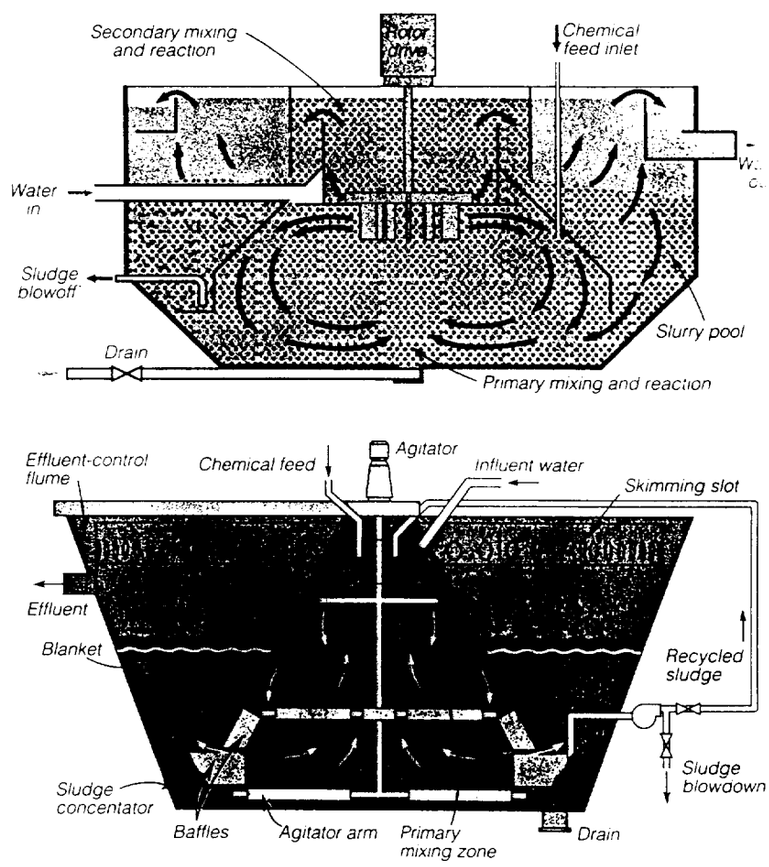

11. Cold lime-softening removes carbonate and non-carbonate hardness at ambient temperatures. Solids-contact unit (top) mixes incoming raw water and chemicals with solids formed previously in lower zone to enhance action, requires a 60-90-min detention. Process is also performed in combined clarifier/softener (bottom) using preformed sludge as flocculation seed to cut detention time; sludge blanket filters particulates from rising water. Sludge recycling in unit shown increases seed-crystal concentration

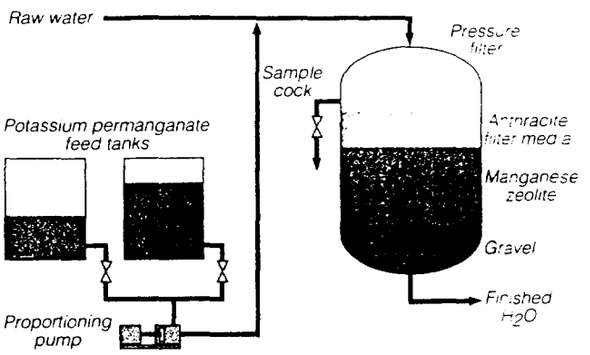

12. Iron and manganese are removed from solution in unit combining oxidation and filtration, precipitating both above filter bed and in zeolite layer. Heavier precipitates are removed in anthracite layer

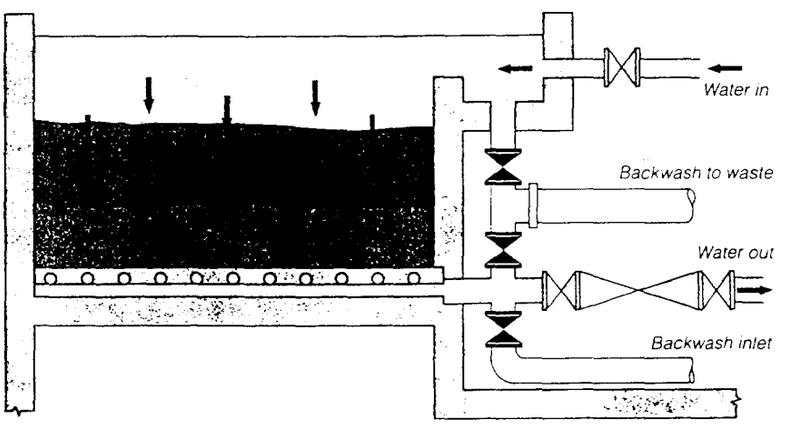

13. Gravity filters treat clarified water having fairly low turbidity. Rectangular concrete units handle large flows economically

$$2NaOH + Ca(HCO_3)^{2} + Ca^{+2} = 2CaCO_3 + 2H_2O + 2Na^{+1}$$

Choice of treatment additive is a matter of economics: Caustic can be considered if the calcium content is about twice that of bicarbonate.

Similarly, either lime or caustic can be used to provide hydroxide for precipitation of magnesium hardness as magnesium hydroxide. In the case of non-carbonate calcium compounds (such as sulfate), carbonate needed for calcium precipitation is added as soda ash, although some is provided by conversion of natural bicarbonate to carbonate form upon addition of lime or caustic.

Finally, although the magnesium naturally present in raw water may be sufficient for reduction of silica content, an additional amount is usually provided as magnesium oxide or in the form of dolomitic lime. For recirculating cooling systems, note that silica content usually be kept below the saturation level of magnesium silicate to realize high cycles of concentration. This can be done at hotwell temperatures of 90 to 110F, even with scale-inhibiting chemicals present.

Softening by cold-process treatment is never complete because both calcium carbonate and magnesium hydroxide are slightly soluble in water. Although residual hardness is reducible to 25 ppm in theory, it is rarely taken below 50 ppm. For high-silica waters, cold-process treatment produces residuals as low as 3 ppm.

One of the problems posed by the high lime excess required to complete the reactions in cold-process softeners is after-precipitation of calcium. This can be counteracted by addition of hydrochloric or sulfuric acid for neutralization of excess lime and conversion of residual carbonates to soluble bicarbonates. Organic and phosphate surface-active agents also retard after-precipitation.

Warm- and hot-process softeners continue to find use for large-capacity, low-pressure industrial boilers (up to about 600 psig) that do not require fully demineralized water. It enables silica removal with magnesium salts, as well as removal of turbidity, alkalinity, O_2, and oil; some CO_2 is also driven off. Equipment used features the same chemical reactions as in cold processing. As mentioned, unit operating temperature exceeds 212F, depending on the pressure of available steam; treated water is delivered at corresponding temperature. Reactions are almost instantaneous at the elevated temperature. Sedimentation is rapid at the reduced viscosity; precipitates settle quickly to the tank bottom, from which sludge is discharged periodically.

Treated water leaves the settling tan flows to anthracite filters for polishin

Development of zeolites capat operating at high temperatures made i sible to remove remaining hardnes alkalinity. This involves use of exchange resins (see discussion below periodic regeneration of resins salt—sodium chloride (NaCl). Wi zeolite softening, soda ash must be us the sedimentation tank to reduce harc but this increases water alkali Removal of non-carbonate hardness salt-regenerated ion-exchange unit is costly than using soda ash.

While sodium zeolite softening viable and common approach, the hot cess method has the disadvantag requiring a heat source and the nec reduce water temperatures subsequent protect downstream equipment. W. handling problems add to its disfavor.

Iron and manganese may be a pro at industrial plants using wellwate boiler makeup. Oxidation, as discu above, is the basis for removing t impurities by several methods. Aera offers the added advantage of remo CO_2. When iron is present in the un dized (ferrous) state, however, comp precipitation of the oxide may not be rapid, and pH must be elevated to 7. higher.

Where lime or lime-soda softenin used, pH of the treated water is h enough to precipitate iron as ferric hyd ide. Prior aeration can supply the neces O_2 and reduce the amount of lime requi zeolite softening may have to follov remove remaining hardness.

A direct-contact method combining dation and filtration removes iron, m ganese, and hydrogen sulfide in one s The filter-bed material acts as a catalyst the iron reaction with O_2; in some case supplies the necessary oxygen, which n be replenished periodically by use c regenerant chemical. Potassium perm ganate is used as the oxidizing agent i representative process, together with a ter bed of anthracite and manganese zec (greensand), as shown in Fig 12. Ra water pH is maintained at about 7.2 effective operation.

Permanganate is fed as a 1 to 2% sc tion directly to the inlet line. Precipitat occurs in the compartment above the b Heavier precipitates are filtered out by anthracite, while remaining fines and res ual dissolved metal are removed by t zeolite. Latter acts as a buffer in providi final oxidant if insufficient permangan is supplied; if permanganate is overfed, t zeolite removes the excess.

Next step: Filtration

Even with clarifiers operating at op mum levels under anticipated conditior additional pretreatment is required f removal of remaining suspended and cc

loidal solids, as well as unsettled chemical precipitates, to prevent fouling of membranes and ion-exchange resins used in subsequent treatment steps. This is done by filters using some form of porous medium in a normal-flow or dead-end process.

Efficiency for retention of solids depends on their size and the pore size of the medium used. Typical media applied to larger particles (greater than about one micron) include screens, synthetic fiber, paper, and beds of rigid and granular solids. Finer filtering action requires use of synthetic membranes, which are effective down into the ionic range.

In the pretreatment sequence, filtration normally follows the clarification procedure. Note that, in certain cases, raw-water turbidity may be low enough to permit direct or in-line filtration in conjunction with filtering media, avoiding the use of a clarifier. This involves addition of a coagulant in an in-line mixing tank; water is moved to a filter inlet after a 10 to 15-min residence time, where a small amount of anionic polymer may be added to enhance flocculation of solids and precipitation on the media.

Granular media have been used predominantly from the start, in open or closed gravity filters. These usually feature a 2-3-ft bed of fine sand and are supported by a gravel subfill (Fig 13). Solids are removed from overlying water as it percolates down, adhering to the media; extremely clear water is collected at the bottom. For higher solids loadings—above 25-30 ppm—a coarser medium can be added for roughing filtration and to prevent blinding of the sand bed. Anthracite is the customary choice, with voids about 20% larger than those of sand. The anthracite is used as an overlayer, stratifying the bed from coarse to fine in the flow direction. Flow rates for conventional gravity filters vary from 1 to 4 gpm/ft^2 of surface area.

Periodic cleaning of the filter bed is essential to maintain performance effectiveness. Cleaning frequency varies with allowable head loss through the filter, usually 8-12 ft; practical limit is the development of excessive pressure drop in the bed. Backwashing with clarified water is the preferred cleaning method. Depending on water temperature, flow rate ranges from 10 to 20 gpm/ft^2—high enough to expand the bed volume by at least 50%. This allows scrubbing action among media grains without their loss down the drain. Rinsing is necessary before returning filter to service.

Valveless gravity filters offer the attraction of automatic self-cleaning by means of a built-in backwash system. As shown in Fig 14, water level rises slowly in the backwash pipe during operation. At a preselected level, it overflows to waste. Water from backwash storage then flows up through the bed and out the pipe. The action stops when the end of the siphon breaker is exposed. Thus, the unit rinses and returns to service without the attention of an operator.

Pressure filters contain filter media in closed vessels. Vertical units have cylindrical steel shells, diameters up to about 10 ft (Fig 15). Units can be installed in piping systems without repumping, and permit operation at elevated temperature without loss of heat. Available in various types and sizes, they allow higher flow rates and usually require considerably less floor space than the gravity type. Typical bed depths are greater, 3-4 ft, allowing longer runs than gravity units before requiring cleaning. Cleaning may be aided by inclusion of an overhead water-jet or rotary surface washer to break up any cake formed on the media surface before backwashing. Prescouring with air introduced at the vessel bottom is a cleaning-aid alternative.

Horizontal pressure filters, up to 8 ft diameter and 25 ft length, are used indoors for low-head-room areas. Filtering area is larger, but this requires somewhat higher backwash flows. Disadvantage may be offset by compartmentalizing. This allows one section to be backwashed at a time, resulting in lower backwash flow rates.

Even with pretreated water, no more than the first several inches of the media participate in the filtering action when the bed comprises average-grade silica sand—particles normally in the 0.012- to 0.031-in. size range. Clogging of these layers impedes penetration, quickly terminating the service run. As a result, general practice favors use of two or more media of different grain sizes, as in gravity filtration.

A coarser granular layer superimposed over the sand bed removes larger solids selectively, allowing much deeper and more uniform penetration by solid matter. This reduces head loss, allows higher flow rates (6-8 gpm/ft^2) and longer operating cycles before requiring cleaning. Normal practice makes use of media with the fol-

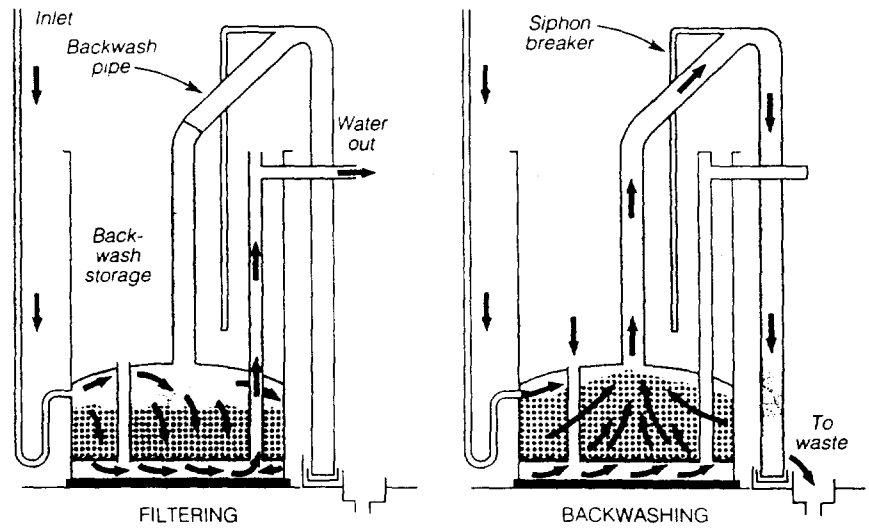

14. Valveless gravity units have built-in backwash, allow service and cleaning without operator attention

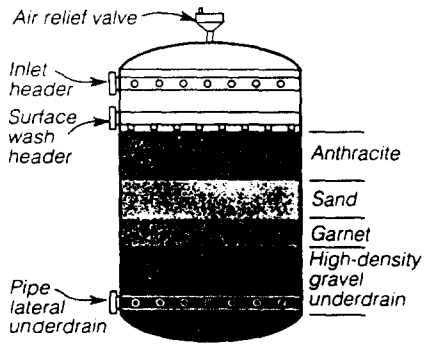

15. Pressure-type filters (above) offer higher flow rates, usually incorporate two or more media of different coarseness grades

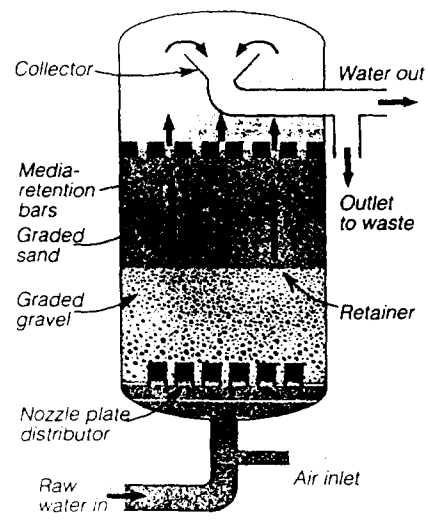

16. Upflow filter (right) takes flow in direction inverse to other types, features single medium with two or more coarseness grades

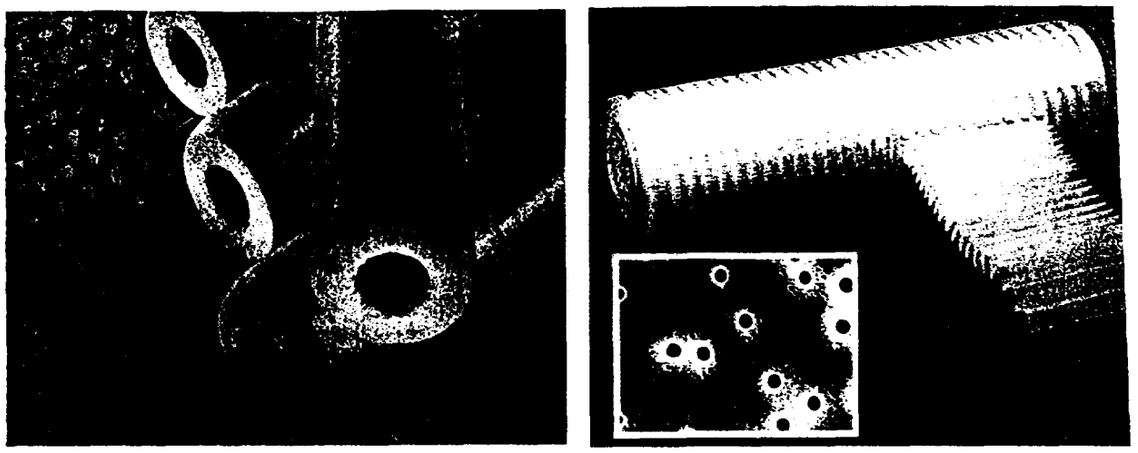

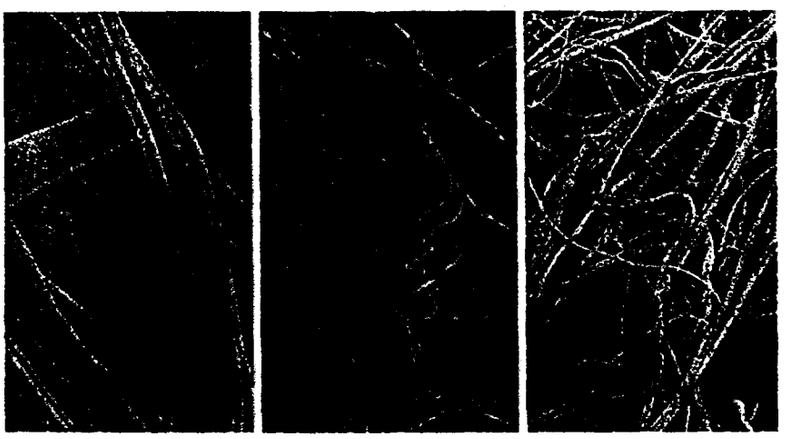

17. Cartridge filters address low-micr and submicron particle range. Forms a wound-cotton or melt-blown polypropyl either depth type or pleated. Pleated ur shown is polycarbonate sheet with 0.2-micron holes drilled by neutrons. Photomicrograph shows type with grad pore size

lowing grain sizes: anthracite, 0.031-0.048 in.; sand, 0.020-0.031 in.; garnet, 0.016-0.024 in.; magnetite, 0.012-0.016 in. Smaller media particles are less dense than the larger, so backwashing (up to 12 gpm/ft^2 in multimedia units) in upflow direction does not change sequence of layers.

High-rate pressure filters operate in the range of 5 to 10 gpm/ft^2. Key to operation lies in use of a deep filter bed, with particles in the media graded from coarse to fine in the direction of flow. System design facilitates capture of suspended particles over the full filter-bed depth. Addition of coagulants and polyelectrolyte coagulant aids enhance ability of filter media to handle large solids loadings between washings. With proper use and control of coagulants, it may be possible to dispense with upstream pretreatment.

Even higher filtration rates can be obtained with ultra-high-rate units. Comprising multimedia beds with combined depths up to 7 ft, these can process water containing over 100 ppm solids at rates of 15 to 20 gpm/ft^2.

Upflow filters also feature in-depth tration, but reverse both the directio water flow and grading of media f those of gravity and pressure filters 16). Filter media consist of sand of tw more grades of coarseness in equal umes.

Coarse bottom layer traps much of suspended solids, th top layer remov fine particles. A retaining grid pern operation at up to 10 gpm/ft^2 without l of filter material. Bottom gravel layer tributes water flow to the bed. Flushing the forward direction by a combination compressed air and water at a high fl rate dislodges and removes trapped soli

Greater in-depth filtration accomn dates loadings to 500 ppm and high allowing direct filtration of raw water high flow rates. Performance is facilita by addition of high-molecular-weight po mer, a requirement in systems not inclu ing clarifiers. Water containing excessi

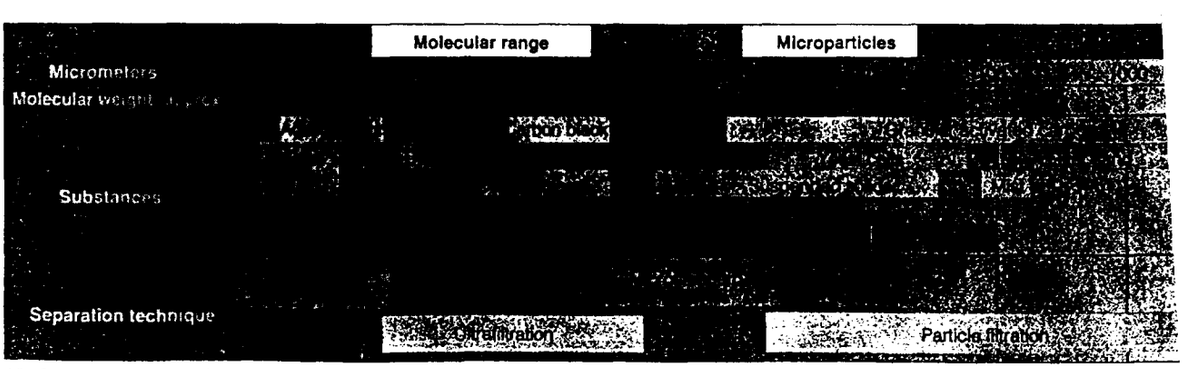

18. Capability range of separation processes determines applicability to removal of contaminants of various types and sizes

odors (and bad taste) may require special treatment. Activated carbon is used for this purpose, usually built into vertical pressure filters. Carbon depth ranges from 34 to 36 in.; filter media are supported by layers of gravel and sand.

Two newer sand-filtration systems designed for specialty applications also have found use in pretreatment. One provides for continuous filtering of water with small particulates at high flow rates without imterruption for cleaning. This is made possible by continuous recycling of sand media upward through a water/air scrubbing column to the vessel top. Clean sand is removed there and returned to the bed below, while the slurry reject is discharged. Process water moves upward through the settling bed, where suspended solids are removed, and discharged at the vessel top. System handles loadings of about 20 ppm, in sizes of about 10 microns. Used directly on river water, performance is aided by adding a small amount of electrolyte.

The other, designed to remove particulates down to 2 microns from cooling-water sidestreams, targets even smaller particulates in a makeup pretreatment system. Cyclonic action whirls process water above the sand bed, forcing solids to accumulate at the tank wall and remain suspended above the bed. Water, largely purified, receives final filtration as it drops through the constricted bed. Backwash is triggered at 8-psi pressure differential across the bed, removing overlying contaminants. A unit rated at 0.45 micron is in use by a utility for polishing makeup water before demineralization.

Cartridge filters, the second major type used in pretreatment systems as well as in other powerplant applications, are used for polishing makeup water that has been clarified and media-filtered and still contains sizable particulate matter—20-30 microns and larger. They provided further downstream protection by guarding against filter breakthroughs.

General focus of interest is operating efficiency, strength, and dirt-holding capacity, while major concerns in nuclear applications are reduction of corrosion-product transport together with protection against unloading of particulates, discharge of leachable matter (halogens, sulfate), and media migration. Long-established materials used in cartridge filters have included pleated paper and fluoride-bearing polymers. The need for high dirt retention under high pressure differentials (up to 75 psi) and resistance to boric acid, morpholine, and other chemicals has turned the industry's attention to new glass-fiber and polypropylene media.

Melt-blown polymers (polypropylene, polycarbonate) either in depth or pleated form, offers particular attraction for disposable cartridges (Fig 17). The fibers are continuous, with no resin binder or other potential source of extractables. Careful control of fiber diameter during manufacture—usually with computer assistance—makes it possible to vary pore size without affecting density, and allows longer service life. One of the newer types features an outer (upstream) zone, with pore size varying continually from 30 or more microns down to that of the absolute-rated inner zone; latter is made of ultrafine fibers providing removal of particles as small as 0.5 micron. The net effect is to provide uniform density and higher void volume throughout the filter thickness, hence greater dirt-holding capacity.

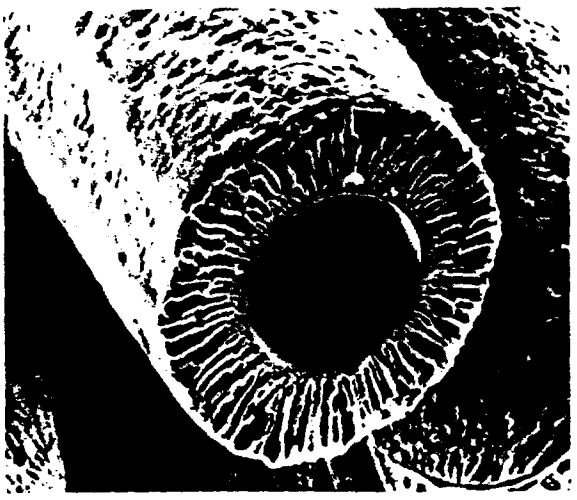

19. Hollow-fiber membranes reduce concentration of organic and colloidal matter incapable of removal by micron particle filters

Wound-cotton and polypropylene filters are used for fine filtration of makeup water, while pleated glass-fiber filters are applied to nuclear primary water. The latter two are available in submicron absolute ratings. Note that filters are rated as either absolute or nominal. A particular absolute micron rating indicates 100% capture of all particles that size or larger; nominal ratings are related to average pore size, and have no real significance unless accompanied by a statement of percentage removal—99% of all particles larger than 10 microns, for example. Proper system design requires a clear understanding of cartridge-filter characterization to avoid possible confusion.

An entirely different approach is used in septum or "precoat" filters. Although their use in powerplant steam-generation applications is primarily for polishing condensate returns in high-purity systems to remove products of corrosion, they warrant mention in this overview of filtration. Septum filters, either of tubular or leaf type, rely on a thin layer of filter medium—usually diatomaceous earth—precoated onto a porous septum. Applied in the form of a slurry, the medium is retained on the substrate surface while the water passes through.

Because performance is reduced by buildup of particulates on the filter surface, precoat layers must be replaced periodically. Service runs may be extended by body feeding—application of additional media as a filter aid during operation, which continually provides a fresh filter surface. (As explained and illustrated below, septa used in condensate polishing receive precoats of ion-exchange resin and fibrous filter aid.)

Disposable cartridge filters rated down to 1 micron abs and lower meet high-purity makeup and primary-water needs. In addition, they are seeing increasing application in the protection of downstream membrane units from fouling by particulates, especially where these are preceded by carbon filters. How the capabilities of the various types lends to these combinations can be seen from Fig 18. At the same time, the chart indicates the need for protection against two contaminant groups—organics and colloidal matter—falling in the removal range between those of membranes and conventional micron particle filters.

This introduces the concept of membrane filtration, which is discussed below in relation to removal of ionic substances (salts) from solutions. Briefly, two membrane types protect against organics and colloids—microfilters (MF) and ultrafilters (UF), having pore sizes one or two decades larger than those of the more familiar reverse-osmosis (RO) membranes but smaller than those of fine filters. These membrane types are often described interchangeably with RO membranes, because of similarities in design and operation. MF membranes are intended to remove the largest submicron-size matter from low-turbidity water, the type targeted by extremely fine absolute-rated cartridge filters with sharp cutoffs.

Consequently, UF membranes are gaining favor at utilities to fill the gap for treatment of makeup water for high-pressure steam generation. Though available in both spiral-wound and hollow-fiber (0.02 in. ID) modules, plants reporting their successful use have opted for the fine hollow-fiber type (Fig 19). To illustrate their capability, passage of water through a UF modules with an 80,000-M.W. (molecular weight) cutoff removes at least 90% of the colloidal silica not previously removed in pretreatment. Silica, a potential scalant in high-pressure turbines, falls at the high end of the submicron-size range. UF membranes at the lower end—about 10,000-M.W. cutoff, close to the RO operating range—are effective in reducing concentrations of chloride and sulfate contaminant associated with organics.

ARGONNE NATIONAL LABORATORY
9700 South Cass Avenue, Argonne, Illinois 60439
Telephone 708/252-3737
Fax 708/252-9281

August 31, 1994

Ms. Sarah Tarbox
Harza Environmental Services
Sears Tower
233 S. Wacker Dr.
Chicago, Illinois 60606

Dear Ms. Tarbox:

Enclosed is a copy of a paper entitled *Emerging Flue-Gas Cleanup Technologies for Combined Control of SO_2 and NO_x*. It is an update of the article that appeared last January in "Power Engineering" magazine, and includes references that may help you run down additional information.

Thanks for your interest in our work. I hope that the paper proves useful.

Sincerely,

C. David Livengood
Environmental Systems Engineer
Energy Systems Division

Enclosure
CDL/vad

cc: J. Markussen, PETC

EMERGING FLUE-GAS CLEANUP TECHNOLOGIES FOR COMBINED CONTROL OF SO_2 AND NO_x

by

C. David Livengood*
Argonne National Laboratory
9700 South Cass Avenue
Argonne, IL 60439

Joanna M. Markussen
U.S. Department of Energy
Pittsburgh Energy Technology Center
P.O. Box 10940
Pittsburgh, PA 15236

Presented at the

NO_x Control VII Conference

Sponsored by the
Council of Industrial Boiler Owners

Oak Brook, Illinois

May 2-3, 1994

The submitted manuscript has been authored by a contractor of the U. S. Government under contract No. W-31-109-ENG-38. Accordingly, the U. S. Government retains a nonexclusive, royalty-free license to publish or reproduce the published form of this contribution, or allow others to do so, for U. S. Government purposes.

*Work supported by the U.S. Department of Energy, Assistant Secretary for Fossil Energy, under contract W-31-109-ENG-38.

EMERGING FLUE-GAS CLEANUP TECHNOLOGIES FOR COMBINED CONTROL OF SO_2 AND NO_x

C. David Livengood
Energy Systems Division
Argonne National Laboratory
Argonne, Illinois

Joanna M. Markussen
U.S. Department of Energy
Pittsburgh Energy Technology Center
Pittsburgh, Pennsylvania

ABSTRACT

Enactment of the 1990 Clean Air Act Amendments, as well as passage of legislation at the state level, has raised the prospect of more stringent nitrogen oxides (NO_x) emission regulations and has fueled research and development efforts on a number technologies for the combined control of sulfur dioxide (SO_2) and NO_x. The integrated removal of both SO_2 and NO_x in a single system can offer significant advantages over the use of several separate processes, including such factors as reduced system complexity, better operability, and lower costs. This paper reviews the status of a number of integrated flue-gas-cleanup systems that have reached a significant stage of development, focusing on post-combustion processes that have been tested or are ready for testing at the pilot scale or larger. A brief process description, a summary of the development status and performance achieved to date, pending commercialization issues, and process economics (when available) are given for each technology.

INTRODUCTION

The development of advanced flue-gas-cleanup (FGC) technologies for the control of sulfur dioxide (SO_2) and nitrogen oxides (NO_x) emissions continues to be a very active area of research and development, both in this country and abroad. This activity is driven both by legislation (such as the 1990 revisions to the federal Clean Air Act and state-level actions reflecting local concerns) and by the desire to develop technologies that surpass current options in terms of performance, costs, operability, and waste/by-product properties. New issues, such as concern over global climate changes and the health effects of toxic air emissions ("air toxics"), are also helping to shape and prioritize the development programs.

Commercially applied control technologies have typically involved combustion-modification techniques for NO_x and some form of wet scrubbing for SO_2. Recently, both selective catalytic reduction (SCR) and selective noncatalytic reduction (SNCR) for NO_x control have achieved commercial status for some applications, spray-dryer technology has led to the development of a wet/dry scrubber system for SO_2 that produces an easily handled dry waste, and various duct-injection processes have demonstrated moderate levels of SO_2 control. Ongoing development programs address a wide variety of alternative technologies that include a number of integrated processes for the removal of both SO_2 and NO_x in a single system. Such integration generally reduces system complexity and costs, enhances operability/reliability, and takes advantage of beneficial synergisms between pollutants in the removal process. In some cases, careful

integration of the technology with other processes in the plant can yield additional benefits, such as significant energy savings.

This article provides a status report on a number of integrated FGC systems that have reached a significant stage of development, focusing on post-combustion processes that have been tested or are ready for testing at the pilot scale or larger. Although a wide variety of technologies is discussed, it should be noted that there are a number of other integrated approaches that are not dealt with here. These include options such as slagging combustors, fluidized-bed combustion, gasification/combined-cycle systems, and various processes involving the injection of sorbents or reactants solely into the furnace. These other approaches may offer features that should not be overlooked when evaluating alternatives for a specific application.

TECHNOLOGY SUMMARIES

In order to achieve mandated air quality objectives as rapidly as possible, it is clear that emissions control equipment will have to be installed at many existing facilities. Almost any technology can be installed as a retrofit, given sufficient resources, but the realities of plant layout, operating characteristics, and/or remaining service life can make such an installation exceedingly difficult and inordinately expensive. The first two technologies described in this section are especially relevant to these issues, having been developed specifically for retrofit of NO_x control to existing flue-gas desulfurization (FGD) systems, a particularly important consideration for the many facilities with existing scrubbers. The third technology, in-duct sorbent injection, is being developed as a low-cost retrofit of both SO_2 and NO_x control that avoids the installation of major equipment items. The remaining technologies are complete systems that are designed to remove both species (and perhaps particulate matter (PM) as well), but that also involve more extensive new equipment requirements. Note that unless explicitly stated otherwise, the existence of an electrostatic precipitator (ESP) or baghouse for PM control is assumed in all cases. While the performance of the PM-control device is not emphasized here, its importance can be expected to increase in the future in connection with the capture of fine-particulate matter that may be carrying toxic species.

Wet Scrubbing with Metal Chelates

The dominant FGD technology today is wet scrubbing based on limestone, lime, or sodium carbonate. All of these processes are capable of well over 90% SO_2 removal, but they are largely ineffective for NO_x removal due to the low solubility of the principal species, nitric oxide (NO). In view of the large number of wet scrubbers already in place or planned for the near future, a process that promotes NO_x removal simply through the addition of chemical additives, as indicated in Figure 1, could have a significant impact on control strategies.

It has been found that some metal-chelate additives, such as ferrous ethylenediaminetetraacetate ($Fe(II)\cdot EDTA^{2-}$), promote NO_x removal because they quickly remove any absorbed NO from solution and thereby maximize the absorption driving force. The coordinated NO can react with a sulfite ion, freeing the ferrous chelate for further reactions with NO. This synergism makes external regeneration of the Fe(II)•EDTA to release the NO unnecessary. Laboratory tests at Argonne National Laboratory (ANL) have given NO_x removals of up to about 60% for SO_2

removals of 90% (1). Higher levels of removal can be achieved with more vigorous gas/liquid contacting. Wastes contain the usual FGD products (e.g., $CaSO_3/CaSO_4$), together with nitrogen-sulfur compounds and perhaps other species.

A significant process problem is oxidation of the iron in the additive to the inactive ferric state. Research efforts have been directed at the investigation of "secondary" additives with antioxidant/reducing properties (1), reduction of ferric to ferrous ions using bisulfite ions in the scrubber liquor (2), and reduction using an electrochemical cell (3).

Pilot-scale tests of the technology were conducted during 1991 by the Dravo Lime Company with support from the U.S. Department of Energy (DOE). The tests utilized a 1.5-MW pilot plant constructed by Dravo at the Miami Fort Station of the Cincinnati Gas and Electric Company. Conditions investigated during the experiments included the liquid-to-gas ratio, gas velocity, scrubber packing materials, flue-gas SO_2 and NO_x concentrations, and ferrous ion concentration in the scrubber liquor. An antioxidant was used to maintain the desired ferrous ion concentration. Nitrogen oxides removals of up to 60% were obtained using packing in the scrubber tower. The corresponding SO_2 removals were essentially 100% (4). A thorough physical and chemical characterization of the waste produced has been conducted by Dravo and ANL. Both short and long-term tests of the chemical properties of the waste have not revealed any problems for disposal, biological tests have shown that even the unstabilized material is of very low toxicity, and stabilization has been readily achieved using conventional methods (5).

An economic analysis of the technology has been conducted by the Dravo Lime Company (4). Using 1990 FGD costs from the Electric Power Research Institute (EPRI), assuming installation of low-NO_x burners for 50% NO_x reduction, an additional 50% reduction from the metal-chelate-enhanced scrubbing, and maintenance of the ferrous-ion concentration using an electrochemical cell, Dravo found capital costs for adding NO_x control of $48-65/kW (depending upon design and operating conditions) and levelized operating costs of $646-830/ton NO_x removed.

Further development of this technology, focusing upon improved methods for maintaining the ferrous-ion concentration, is planned by both Dravo Lime and Argonne National Laboratory.

Modified Spray-Dryer Scrubbing

Spray-dryer FGD technology is based on the spray drying of an alkali sorbent, typically lime slurry, followed by collection of the resulting particulate matter. The slurry is atomized and mixed with hot flue gas, which evaporates virtually all of the water while SO_2 is simultaneously absorbed and reacted with the alkali. The resulting dry powder and fly ash are collected in either a baghouse or an ESP and sent to a landfill for disposal. Process simplicity, low energy and water consumption, and the dry state of the waste are significant advantages. Sulfur dioxide removals of up to 90% have been demonstrated in both low- and high-sulfur applications (6).

Very little NO_x is removed under normal operating conditions, but research at the Pittsburgh Energy Technology Center (PETC) showed that elevated spray-dryer exit temperatures and the addition of sodium hydroxide (NaOH) to the lime can promote significant NO_x removal (7, 8). Full-scale (20-MW) demonstration of this technology was carried out in two series of tests at ANL using flue gas from the firing of high-sulfur (3.5%) coal and the process configuration

shown in Figure 2. Raising the spray-dryer exit temperature from the normal value of about 65°C to above 82°C initiates NO_x removal, which is accompanied by some net nitrogen dioxide (NO_2) increase in the stack gas, ranging from 6-18 ppm. The addition of NaOH at 2.5-10% by weight of lime improves NO_x removals and reduces the lime requirement for SO_2 control. Most of the NO_x removal occurs in the baghouse, and extended intervals between bag cleanings produce the best performance, with average values of about 35% being attained at ANL. With some operating modifications, NO_x removals up to 50% should be attainable. Removals also depend strongly on the SO_2/NO_x ratio, being higher for high SO_2 concentrations in the flue gas (9). It should be noted, however, that the temperatures needed to promote NO_x removal also tend to suppress SO_2 capture, making it difficult to simultaneously optimize both NO_x and SO_2 control.

Detailed costs for the process are not available, but one preliminary estimate projected operating costs about 20% higher than those for normal SO_2 scrubbing (9). Process uncertainties are related to waste characteristics (solubility of sodium compounds) and long-term steady-state performance. Note that this technology represents a fully integrated SO_2/NO_x/PM process.

In-Duct Sorbent Injection

Several process concepts (summarized in Figure 3) use in-duct injection of sorbents to achieve combined SO_2/NO_x control or to supplement other removal measures. In one of these processes, investigated by Research-Cottrell Environmental Services and Riley Stoker, alcohol-hydrated lime is injected into the convective section of the boiler (at about 540°C) for primary SO_2 control. Sodium bicarbonate is injected in the flue-gas duct at about 150°C for NO_x removal and additional SO_2 control. Urea injected with the sodium bicarbonate helps control unwanted NO_2 production. Small-scale tests gave 90% SO_2 removal, and overall NO_x removals of up to 75% have been projected for the process when combined with low-NO_x burners (10). Process development was carried through testing at a 7,000 scfm proof-of-concept unit. Process uncertainties involve trade-offs between temperature and urea for NO_2 control, demonstration of high SO_2 removals at reasonable sorbent consumption, and disposal properties of the waste generated. A preliminary economic analysis reported in 1990 gave capital costs of $50/kW and levelized operating costs of about 10 mills/kWh (11).

Another process, which was selected for testing under the third round of the DOE Clean Coal Technology Program, is being developed by a team led by the Public Service Co. of Colorado. Process plans call for a combination of several subsystems utilizing different emission control mechanisms to achieve the desired reductions. For NO_x control, Unit 4 (100-MW) of the Arapahoe Power Plant has been fitted with Babcock & Wilcox low-NO_x burners and overfire air, supplemented by urea injection into the furnace. In-duct injection of either calcium or sodium-based sorbents, supplemented by flue-gas humidification, will be used for SO_2 control. A baghouse will control PM and provide a site for additional SO_2 removal. Construction on the project was completed in 1992 and testing of the individual subsystems has begun. The test program, which will conclude with integrated testing of the entire process, will continue through the middle of 1994. Project goals include up to 70% removal of both SO_2 and NO_x. Tests of the combustion modifications have given NO_x reductions of 68% from the original baseline levels at full load. Addition of urea injection increased the total NO_x reduction to 78%. However, use of urea injection must be balanced against the potential for ammonia slip and conversion of NO to nitrous oxide (12).

Dry sodium bicarbonate injection has also been tested at five coal-fired utility boilers by NaTec Resources, Inc., and has been commercially installed at several industrial sites. Removal values have been as high as 75% for SO_2 and have ranged from 0-40% for NO_x on systems equipped with ESPs. Sulfur dioxide removals as high as 90%, with 25% NO_x removal, were obtained in small-scale tests with injection upstream of a baghouse. Solubility of the wastes requires a lined pond with a leachate collection system for disposal. To enhance the attractiveness of the process, recent development efforts have been focused on recovery of sodium sulfate (Na_2SO_4), a commercially valuable by-product. However, full-scale tests have yet to be conducted for a complete scrubbing/by-product system. Projected costs reported by the developer in 1990 for such a system were $81/kW capital cost (including a new baghouse) and 5.05 mills/kWh levelized cost (13).

NOXSO Process

The NOXSO process is a dry, regenerable FGC system designed to simultaneously remove over 90% of the SO_2 and 70-90% of the NO_x from flue gas. The gas is cleaned as it passes through a fluidized bed of sodium-impregnated alumina sorbent at about 120°C. Removal of PM can be accomplished either before or after the process. The reaction mechanisms are complex, giving a variety of sulfur- and nitrogen-containing compounds in the spent sorbent (14).

Regeneration of the sorbent is performed separately for NO_x and SO_2. Adsorbed NO_x is released as the sorbent is heated to about 620°C with hot air in a second fluidized bed, as shown in Figure 4. The off-gas can be recycled to the combustor with the combustion air. As a result of chemical equilibria in the combustor, NO_x formation is suppressed, resulting in a new, slightly higher, steady-state NO_x concentration in the flue gas. Thus, the only NO_x removal by-product is nitrogen (N_2). After heating, the sorbent is treated with a reducing gas, such as methane, and steam to produce a concentrated stream of SO_2 and hydrogen sulfide (H_2S). These species are converted in a Claus reactor to elemental sulfur, which is sold as a by-product.

Small-scale process tests have been conducted at the Tennessee Valley Authority's Shawnee Plant and at PETC. Parametric testing and corrosion experiments were recently conducted in a 5-MW pilot plant at Ohio Edison's Toronto Plant. A 115-MW demonstration of the process will be conducted under the third round of the DOE Clean Coal Technology Program. Process concerns have been in the areas of NO_x-recycle performance, sorbent attrition rates, and materials corrosion in some parts of the system (15). The NO_x-recycle part of the process has yet to be tested at a large scale, but data from the pilot-plant tests appear to show acceptable attrition rates and corrosion rates within acceptable limits with appropriate materials choices for the various components. Removal rates for both SO_2 and NO_x well into the 90% range were observed in some phases of the pilot-plant tests, but numerous design/operating tradeoffs have to be taken into account. Values of 95% and 80% for SO_2 and NO_x removals, respectively, are being used in current design studies. An economic analysis estimated capital costs for the process at $257/kW (1993 dollars) with levelized costs of 8.5 mills/kWh (16).

SNRB Process

The SNRB™ (SOx-NOx-Rox Box™) process of Babcock & Wilcox combines injection of an SO_2 sorbent with a hot catalytic baghouse for NO_x and PM removal (Figure 5). A calcium- or

sodium-based sorbent is injected downstream of the boiler economizer and reacts with SO_2 in both the duct and the filter cake on the bags. Ammonia (NH_3) injected into the flue gas reacts with NO_x over a catalyst suspended within the filter bags, producing N_2 and water. A key process feature is the use of woven ceramic fiber filter bags to withstand temperatures of 425-470°C. Low exit SO_2 and sulfur trioxide (SO_3) levels may permit lower air-preheater exit temperatures and greater system thermal efficiency.

A 5-MWe process demonstration was completed in May 1993 at Ohio Edison's R.E. Burger Plant under the second round of the DOE Clean Coal Technology Program. During the one-year demostration program, SO_2 removal efficiencies greater than 80% were achieved using commercially hydrated lime at Ca/S stoichiometries of 1.8-2.0 (17). Testing with sodium bicarbonate showed that SO_2 removals over 90% were attainable at a normalized stoichiometry (Na_2/S) of 2.0 over a wide range of baghouse temperatures from 220-470°C. (For the lower temperature baghouse applications with a sodium-based sorbent, fiberglass bags could be used.) Nitrogen oxides reductions of greater than 90% were achieved at NH_3/NO_x molar ratios of 0.85-0.90 (18). A minimum lifetime of 3 y is currently being projected for the NO_x catalyst (19). An economic study developed using EPRI guidelines estimates process capital costs of $240/kW and an annual levelized cost of $509/ton SO_2 + NO_x removed for a 500 MW plant burning 2.5 wt.% S coal (1993 dollars, assuming a 15 y book life) (20).

SNOX and DESONOX Processes

The SNOX (WSA-SNOX) process, developed by Haldor Topsøe A/S, is designed to catalytically remove 95% or more of both the SO_2 and NO_x in the flue gas while producing a salable by-product of concentrated sulfuric acid, as shown in Figure 6. Selective catalytic reduction of NO_x to N_2 using ammonia is followed by catalytic oxidation of SO_2 to SO_3. The SO_3 is hydrated to sulfuric acid, which is then concentrated to >93 wt.% acid strength in an air-cooled falling-film condenser constructed of borosilicate glass tubes. Although the process consumes a significant amount of energy, extensive energy recovery within the process is claimed to give net energy savings for the plant of 1-4% (1% for each percent of sulfur in the fuel), due mainly to the exothermic heat of formation of sulfuric acid (21). Ammonia slip from the SCR reactor is oxidized in the SO_2 converter and does not present an emissions problem. A baghouse or ESP upstream of the SCR unit removes most PM. Any remaining fine particulates are retained in the SO_2 converter catalyst bed, which undergoes periodic cleaning by means of a semi-automatic system for sifting the catalyst. Lifetimes of 7-10 y for the SO_2 catalyst and 3-6 y for the NO_x catalyst are projected at this time on the basis of previous tests (22).

In Denmark, a 3-MW process demonstration unit operated on a low-sulfur flue-gas stream from 1987 until 1991, and a 300-MW full-scale SNOX plant began operation in November 1991 on a boiler firing medium-sulfur (1.6%) coal. A 30-MW unit has been in operation on a petroleum-coke-fired boiler in Italy since April 1991. That unit has maintained greater than 96% NO_x removal and over 96% SO_2 removal (23). In the United States, a 35-MW demonstration of the technology was conducted at Ohio Edison's Niles Station under the second round of the DOE Clean Coal Technology Program. Asea Brown Boveri (ABB) Environmental Systems carried out a two year test program, which was scheduled for completion in December 1993. Sulfur dioxide and NO_x removal efficiencies were typically found to range around 95% (24). The sulfuric acid product was consistently of 94-95 wt.% concentration and was of sufficient quality that all of the

product was sold to local industry. An independent study evaluating NO_x/SO_2 technologies according to EPRI guidelines estimated process capital costs of $375/kW and a levelized cost of 10.5 mills/kWh (1990 dollars) (25).

A similar process called DESONOX was conceived by the German firm Degussa and is being developed jointly with Stadtwerke Münster, Lentjes, and Lurgi. A single reactor tower containing both reduction and oxidation catalysts is used. The sulfuric acid by-product is claimed to be of sufficient purity to be used in producing fertilizers. The process has been demonstrated on a 98-MW boiler at the Hafen cogeneration plant in Münster since November 1988; a second unit is planned to go into operation at the same facility in the summer of 1992. Removals for low-sulfur coal operation have been approximately 80% for NO_x and 94% for SO_2 (26).

Copper Oxide Process

The copper oxide (CuO) process combines SO_2 capture with catalytic reduction of NO_x using NH_3 in an absorber containing CuO-impregnated alumina sorbent. Regeneration of the sorbent using a reducing gas produces a concentrated SO_2 stream that can be processed into a salable by-product. In the 1970s, Shell developed a parallel passage (fixed-bed) reactor system and conducted full-scale tests on an oil-fired boiler at the Showa Yokkaichi Sekiyu refinery in Japan (27). In the U.S., UOP licensed the Shell process and completed pilot-plant tests (0.5 MWe) on a coal-fired unit at Tampa Electric Company's Big Bend Station in 1980. Average removals of 90% for SO_2 and 70% for NO_x were documented, although 90% NO_x reduction was projected with design modifications (28).

Concurrent with Shell's work, PETC independently developed a fluidized-bed reactor system. Small-scale tests of the Fluidized-Bed Copper Oxide process have yielded approximately 90% removal of both SO_2 and NO_x (29). Under DOE contract, UOP is completing a conceptual design and economic evaluation of a 500-MW commercial-scale unit. Another study, conducted in 1991, placed capital costs for the process at $133/kW (1990 dollars), with levelized operating costs of 19.97 mills/kWh (30). Reduced operating costs have been projected for a moving-bed absorber variation of the process, which was tested at laboratory scale by Rockwell International Corp. The Moving-Bed Copper Oxide process, which integrates PM control into the absorber vessel, is scheduled for small-scale testing at PETC in 1995 (31).

E-Beam Process

Irradiation of flue gas with high-energy electrons initiates chemical reactions that oxidize SO_2 to SO_3 and NO to NO_2, which can be further reacted with a suitable base to form solid salts. An E-beam process being developed by Ebara (Figure 7) demonstrated removals of over 90% and 80% for SO_2 and NO_x, respectively, in a 5-MW pilot plant. Using NH_3 as a base, an ammonium-sulfate/ammonium-nitrate by-product with potential value as an agricultural fertilizer was produced. A similar process developed by Research-Cottrell using lime rather than ammonia as the base achieved removals of 90% for SO_2 and 60% for NO_x in pilot-scale tests. Ebara is currently investigating the concept of zone irradiation to achieve high efficiencies at lower total dose rates. It is hoped that this will reduce the process energy use by about one-third, to no more than 2% of the plant's gross output (32). Other commercialization issues include uncertainties regarding by-product utilization and economic scaleup of the electron-beam guns.

One study put process capital cost at about $400/kW (1990 dollars) and levelized costs at about 13 mills/kWh, although both values could be significantly reduced with successful development of the zone-irradiation concept and favorable by-product economics (25).

Activated-Coke Process

Activated coke can both adsorb SO_2 and catalyze the reduction of NO_x by ammonia. The use of two sorbent beds, as shown in Figure 8, allows optimization of removal for each species. Regeneration of the spent sorbent at high temperature produces a concentrated SO_2 stream that can be further processed to yield a salable by-product, such as sulfuric acid or elemental sulfur. Such systems have been applied commercially by Bergbau-Forschung GmbH (now Deutsche Montan Technologies) and others in Japan and Germany, where SO_2 removals of 90-99.9% and NO_x removals of 50-80+% have been reported (33). However, most experience has been with low- to medium-sulfur systems, and there is some question regarding process suitability for high-sulfur systems because of high coke consumption. General Electric Environmental Services, Inc. has licensed the Mitsui-BF process for applications in North America (34). A potential advantage to the activated coke process is the removal of selected air toxics. Capital costs of $220-240/kW have been projected for a 500-MW system in the United States firing medium-sulfur coal (35); no operating costs were reported.

Recently, the Electric Power Development Co. Ltd. of Japan has been investigating a single moving-bed activated char process for application to NO_x removal and SO_2 removal "polishing" on a fluidized-bed combustion system. Pilot-scale tests have given removals of over 80% for NO_x and 90% for SO_2. Development issues appear to include the char loss rate, start-up temperature response of the char bed, and negative effects of high moisture and SO_2 levels on NO_x removal (36).

Parsons Process

Very high levels of SO_2 and NO_x removal (up to 99%) are the objective of the Parsons Process. Simultaneous catalytic reduction of SO_2 to H_2S and NO_x to N_2 occurs in a hydrogenation reactor using steam-methane reformer gas. The resulting H_2S is recovered and processed to produce elemental sulfur, a marketable by-product, through the combination of two commercial technologies (FLEXSORB and Recycle Selectox). The performance of the catalytic hydrogenation reactor has been tested with high-sulfur coal in a pilot plant at the St. Marys Municipal Power Plant in Ohio. Results showed that SO_2 reduction of 98+% and NO_x reduction of 92-96% were achievable (37). Although the long-term performance of the catalyst in a particulate-laden gas stream is unknown, a two-day test with high dust loading in the flue gas showed no change in the performance of the catalytic SO_2 and NO_x removals and no plugging of the honeycomb catalyst openings. On the basis of EPRI economic procedures, projected capital costs for a 500-MW plant are $285/kW (1982 dollars) and levelized busbar costs are about 26 mills/kWh (38). A significant process development issue may be the effects of flue-gas O_2 content on increasing hydrogen consumption and, hence, operating costs.

Other NO_x/SO_2 Control Technologies

Other NO_x/SO_2 control technologies undergoing development, but for which limited information is available, are described below.

The SOXAL™ process is a regenerable sodium-based scrubbing system coupled with urea/methanol injection in the boiler with the goal of 90% SO_2 and NO_x removal. A sodium-sulfite scrubbing solution absorbs SO_2 and is regenerated by an electrochemical process using bipolar membranes. Urea reduces 50-70% of the NO to N_2, and methanol oxidizes the remaining NO to NO_2, which is then removed in the sodium-sulfite scrubber. A 3-MW pilot program was completed in July 1993 by AlliedSignal, Inc. at the Niagara Mohawk Power Corporation's Dunkirk Station (39). Removals of 98% SO_2 and up to 70% NO_x were observed. However, high oxidation of the sodium-sulfite solution to sodium sulfate occurred during the simultaneous SO_2/NO_x scrubbing mode. In the near future, AlliedSignal anticipates selling the technology to Ionics Corporation (40).

The MagSorbent process, being developed by Sorbent Technologies Corporation, uses magnesia-coated expanded-vermiculite granules for 90% SO_2 removal and moderate levels (30-40%) of NO_x removal (41). The flue gas is humidified to within a 30°C approach to the adiabatic saturation temperature upstream of a radial panel-bed filter containing the dry magnesia (MgO). The sorbent is regenerated at 600°C with air or a reducing gas. A 2.5-MW pilot plant was operated in a batch mode at Ohio Edison's Edgewater Station. Testing was completed in May 1993 and demonstrated 90% SO_2 removal efficiencies and 20+% NO_x reductions (42). A 10-MWe demonstration unit has been proposed for a European site.

The LILAC (Lively Intensified Lime-Ash Compound) process is being developed by Hokkaido Electric Power Co., Inc. (HEPCO) and Mitsubishi Heavy Industries Ltd., both of Japan. The process uses a sorbent that is produced by mixing fly ash, lime, and gypsum with hot water at 95°C for 15 min. Depending upon the Ca content, the sorbent may or may not undergo an aging process for 12 hours. In the SO_2/NO_x removal process, the sorbent is dried to a powder and injected into the flue-gas duct. The solids are collected in either a downstream baghouse or ESP. Pilot-plant testing of the duct-injection LILAC system began in April 1993 at the HEPCO Tomato-atsuma Power Station. Removals of 75% SO_2 and 55% NO_x were obtained at a Ca/S molar ratio of 2.9 (43). Development of the process is continuing, with efforts directed at increased system reliability and economic competitiveness.

A dry FGD process using a circulating fluidized-bed reactor has been in commercial operation on five coal-fired utility boilers in Germany since 1987, and a combined NO_x/SO_2 version of the process is currently under development. It uses a hydrated lime sorbent for SO_2 capture and an unsupported $FeSO_4$ catalyst plus ammonia for reducing NO_x. Typical operating temperatures are on the order of 385°C, requiring placement of the absorber upstream of the air preheater. Pilot-plant tests on a low-sulfur system (inlet SO_2 concentrations of 450-630 ppm) gave SO_2 removals up to 97% for Ca/S mole ratios of 1.6-1.8. Removals of NO_x up to 88% were achieved with an NH_3/NO mole ratio of 0.7 (44). High sorbent recycle rates (up to 98%) are used in the large-scale FGD systems, but no data were reported for catalyst recycle or loss rates in the pilot plant.

SUMMARY

There is an increasing probability that flue-gas cleanup for NO_x removal will be required at some installations in the United States. If that is the case, integrated systems that combine control functions in a single process offer a number of advantages for both retrofit and new situations. In recent years, considerable progress has been made in developing and characterizing a number of such systems, and new concepts continue to emerge from the laboratory.

The variety of concepts under development provides many technical and economic options to system designers:

- Retrofit versus totally new systems,
- Tradeoffs between cost and removal capabilities,
- Tradeoffs between SO_2 and NO_x removals, and
- Salable by-products versus throwaway waste.

The spectrum of possibilities is certainly challenging to those who must sort through and evaluate the options on the way to a multi-million dollar technology selection. On the other hand, this same spectrum will make it possible to tailor an optimal energy/environmental system for the unique site and business characteristics of any particular installation.

REFERENCES

1. Mendelsohn, M.H., C.D. Livengood, and J.B.L. Harkness, *Combined SO_2/NO_x Control Using Ferrous•EDTA and a Secondary Additive in a Lime-Based Aqueous Scrubber System*, Proc. 1991 SO_2 Control Symposium, Vol. 2, Session 5B - Paper 7, Washington, D.C. (Dec. 3-6, 1991).

2. Walker, R.J., and M.B. Perry, *Simplified Wet Scrubbing Process for SO_2, NO_x, and Particulate Removal from Flue Gas*, Paper No. 47e, AIChE Spring National Meeting, Houston, Texas (April 1989).

3. Tsai, S.S., V.B. Hodge, L.H. Kirby, and J.V. VanLandingham, *Experience in the Reduction of Nitric Oxide in Flue Gas Utilizing the Dow Chemical Company's NO_x Abatement Technology*, Paper No. 90-101.4, AWMA Annual Meeting, Pittsburgh, Penn. (June 24-29, 1990).

4. Smith, K.J., S. Tseng, and M. Babu, *Enhanced NO_x Removal in Wet Scrubbers Using Metal Chelates*, Paper No. 93-WP-95A.02, AWMA Annual Meeting, Denver, Colo. (June 13-18, 1993).

5. Mendelsohn, M.H., C.D. Livengood, W.S. Carlson, and S. Tutokey, *Studies of Waste Produced in Pilot-Plant Testing Using Fe(II)•EDTA and Magnesium-Enhanced Lime for Combined SO_2/NO_x Removal,* Proc. Ninth Annual International Pittsburgh Coal Conference, Pittsburgh, Penn. (Oct. 12-16, 1992).

6. Huang, H., J.W. Allen, C.D. Livengood, W.T. Davis, and P.S. Farber, *Spray-Dryer Flue-Gas-Cleaning System Handbook*, Argonne National Laboratory Report ANL/ESD-7 (April 1988).

7. Markussen, J.M., J.T. Yeh, and C.J. Drummond, *Enhanced Removal of Nitrogen Oxides in a Spray Dryer Using a Lime Slurry Containing Sodium Hydroxide*, AIChE Spring National Meeting, New Orleans, La. (April 6-10, 1986).

8. Huang, H.S., P.S. Farber, C.D. Livengood, J.T. Yeh, J.M. Markussen, and C.J. Drummond, *Simultaneous NO_x and SO_2 Removal in a Spray Dryer System*, AIChE Spring National Meeting, Houston, Texas (March 29-April 2, 1987).

9. Huang, H., J.W. Allen, and C.D. Livengood, *Combined Nitrogen Oxides/Sulfur Dioxide Control in a Spray-Dryer/Fabric-Filter System: Summary Report for the Field Research Program*, Argonne National Laboratory Report ANL/ESD/TM-8 (Nov. 1988).

10. Helfritch, D., S. Bortz, R. Beittel, P. Bergman, and B. Toole-O'Neil, *SO_2 and NO_x Control by Combined Dry Injection of Hydrated Lime and Sodium Bicarbonate*, Proc. 1991 SO_2 Control Symposium, Vol. 2, Session 5B - Paper 4, Washington, D.C. (Dec. 3-6, 1991).

11. Bortz, S., D. Helfritch, R. Beittel, and B. Toole-O'Neil, *Subscale Testing of an Integrated Dry Injection System for SO_2/NO_x Control*, Proc. 1990 SO_2 Control Symposium, Vol. 3, Session 6B - Paper 7, New Orleans, La. (May 8-11, 1990).

12. Hunt, T., and R. Smith, *Combining Low-NO_x Burners, Overfire Air, and SNCR for High Efficiency NO_x Removal*, Paper No. 93-WP-95A.06, AWMA Annual Meeting, Denver, Colo. (June 13-18, 1993).

13. Bennett, R., and E. Darmstaedter, *Sodium Bicarbonate In-Duct Injection with Sodium Sulfate Recovery for SO_2/NO_x Control*, Proc. Fifth Symposium on Integrating Environmental Controls and Energy Production, pp. 19-25, New Orleans, La. (March 4-5, 1991).

14. Yeh, J.T., C.J. Drummond, J.L. Haslbeck, and L.G. Neal, *The NOXSO Process: Simultaneous Removal of SO_2 and NO_x from Flue Gas*, AIChE 1987 Spring National Meeting, Houston, Texas (March 29 - April 2, 1987).

15. Neal, L.G., J.L. Haslbeck, and M.C. Woods, *The NOXSO Clean Coal Technology Demonstration Project*, Proc. 1991 SO_2 Control Symposium, Vol. 2, Session 6B - Paper 2, Washington, D.C. (Dec. 3-6, 1991).

16. Haslbeck, J.L., M.C. Woods, W.T. Ma, S.M. Harkins, and J.B. Black, *NOXSO SO_2/NO_x Flue Gas Treatment Process: Proof-of-Concept Test*, Proc. 1993 SO_2 Control Symposium, Vol. 3, Session 8A - Paper 5, Boston, Mass. (Aug. 24-27, 1993).

17. Holmes, A.R., K.E. Redinger, and G.T. Amrhein, *SO_x Emission Control with the SO_x-NO_x-ROX-BOX*, Proc. 1993 SO_2 Control Symposium, Vol. 1, Session 4A - Paper 5, Boston, Mass. (Aug. 24-27, 1993).

18. Redinger, K.E., R.W. Corbett, H.J. Johnson, *SNRB--Multiple Emissions Control for Coal-Fired Boilers*, Proc. Sixth International Symposium on Integrated Energy and Environmental Management, pp. 77-86, New Orleans, La. (March 1993).

19. Redinger, K.E., Babcock & Wilcox, Alliance, Ohio, personal communication (Oct. 22, 1993).

20. Martinelli, R., T.R. Goots, and P.S. Nolan, *Economic Comparisons of Emerging SO_2 Control Technologies*, Proc. 1993 SO_2 Control Symposium, Vol. 3, Session 7 - Paper 7, Boston, Mass. (Aug. 24-27, 1993).

21. Kingston, W.H., S. Cunninghis, R.J. Evans, and C.H. Speth, *Demonstrating the WSA-SNOX Process Through the CCT Program*, ASME Paper 90-JPGC/FACT-17, Joint ASME/IEEE Power Generation Conference, Boston, Mass. (Oct. 21-25, 1990).

22. Borio, D.C., and W.H. Kingston, *High Efficiency SO_2 and NO_x Abatement with No Waste Generation - The SNOX Process*, Paper 92-113.08, AWMA Annual Meeting, Kansas City, Mo. (June 21-26, 1992).

23. Collins, D.J., R. Ricci, C.H. Speth, and R.E. Bolli, *Initial Operating Experience of the SNOX Process*, Proc. 1991 SO_2 Control Symposium, Vol. 3, Session 7 - Paper 16, Washington, D.C. (Dec. 3-6, 1991).

24. Steen, D.V., S.M. Durrani, D.C. Borio, and D.J. Collins, *SNOX Demonstration Project Performance Data One Year Interim Report*, Proc. 1993 SO_2 Control Symposium, Vol. 1, Session 4A - Paper 3, Boston, Mass. (Aug. 24-27, 1993).

25. Cichanowicz, J.E., C.E. Dene, W. DePriest, R. Gaikwad, and J. Jarvis, *Engineering Evaluation of Combined NO_x/SO_2 Controls for Utility Application*, Proc. 1991 SO_2 Control Symposium, Vol. 2, Session 5B - Paper 5, Washington, D.C. (Dec. 3-6, 1991).

26. *DESONOX Is Put Through Its Paces in Münster*, Modern Power Systems 11(12): 41-44 (1991).

27. Slack, A.V., and G.A. Hollinden, *Sulfur Dioxide Removal From Waste Gases, 2nd ed.*, Noyes Data Corporation, Park Ridge, N.J. (1975).

28. Burke, J.M., *Shell NO_x/SO_2 Flue Gas Treatment Process: Independent Evaluation*, Environmental Protection Agency Report EPA-600/7-82-064 (Nov. 1982).

29. Plantz, A.R., C.J. Drummond, S.W. Hedges, and F.N. Gromicko, *Performance of the Fluidized-Bed Copper Oxide Process in an Integrated Test Facility*, Paper No. 86-47.3, APCA Annual Meeting, Minneapolis, Minn. (June 22-27, 1986).

30. Ratafia-Brown, J.A., *Technical/Cost Comparison of the Moving-Bed & Fluidized-Bed Copper Oxide Processes*, Science Applications International Corporation report to U.S. Department of Energy, Pittsburgh Energy Technology Center, Pittsburgh, Penn. (May 1991).

31. Yeh, J.T., J.S. Hoffman, and H.W. Pennline, *Design of a Moving-Bed Copper Oxide Process for Simultaneous SO_2 and NO_x Removal*, Paper No. 93-TA-173.06P, AWMA Annual Meeting, Denver, Colo., (June 13-18, 1993).

32. Frank, N.W., and S. Hirano, *The Production and Utilization of By-product Agricultural Fertilizer from Flue Gases*, Proc. Fifth Symposium on Integrating Environmental Controls and Energy Production, pp. 87-93, New Orleans, La. (March 4-5, 1991).

33. Richter, E., *Active Coke Processes for SO_2 and NO_x Removal from Flue* Gases, Proc. Third Symposium on Integrated Environmental Controls for Fossil-Fuel Power Plants, pp. 59-70, Pittsburgh, Penn. (Feb. 3-6, 1986).

34. Dague, R.F., K. Tsuji, and I. Shiraishi, *The Activated Coke Process for Combined SO_x/NO_x/Air Toxics Reduction*, Proc. Sixth International Symposium on Integrated Energy and Environmental Management, pp. 244-261, New Orleans, La. (March 1993).

35. Tsuji, K., and I. Shiraishi, *Mitsui-BF Dry Desulfurization and Denitrification Process Using Activated Coke*, Proc. 1991 SO_2 Control Symposium, Vol. 3, Session 8A - Paper 1, Washington, D.C. (Dec. 3-6, 1991).

36. Murayama, H., *Advanced Flue Gas Treatment Using Activated Char Process Combined with FBC*, Proc. 1991 SO_2 Control Symposium, Vol. 2, Session 5B - Paper 6, Washington, D.C. (Dec. 3-6, 1991).

37. Kwong, K.V., R.E. Meissner, III, and C.C. Hong, *Recent Developments in the Parsons FGC Process for Simultaneous Removal of SO_x and NO_x*, Proc. 1991 SO_2 Control Symposium, Vol. 2, Session 5B - Paper 8, Washington, D.C. (Dec. 3-6, 1991).

38. Meissner, III, R.E., V.K. Kwong, J.B. O'Hara, C.C. Hong, and A.B. Stiles, *Parsons FGC Process Development: A Progress Report*, Proc. 1990 SO_2 Control Symposium, Vol. 2, Session 6A - Paper 1, New Orleans, La. (May 8-11, 1990).

39. Hurwitz, D., C. Denker, P. Birdsall, J. Soltys, P. Strangway, *SOXAL™ Demonstration Project at Niagara Mohawk's Dunkirk Steam Station*, Proc. 1993 SO_2 Control Symposium, Vol. 3, Session 8A - Paper 6, Boston, Mass. (Aug. 24-27, 1993).

40. Strangway, P., Niagara Mohawk Power Corporation, Syracuse, N.Y., communication during presentation at the 1993 SO_2 Control Symposium, Boston, Mass. (Aug. 27, 1993).

41. *Ohio Edison Tries Magnesia-Based Control*, Coal & Synfuels Technology, p. 3 (Dec. 9, 1991).

42. Nelson, S. Jr., *Supported Sorbents*, Proc. 1993 SO_2 Control Symposium, Vol. 2, Session 5A - Paper 4, Boston, Mass. (Aug. 24-27, 1993).

43. Nakamura, H., T. Ueno, A. Tatani, and S. Kotake, *Advanced Flue Gas Treatment System Using LILAC Absorbent Prepared from Fly Ash*, Proc. 1993 SO_2 Control Symposium, Vol. 3, Session 7 - Paper 1, Boston, Mass. (Aug. 24-27, 1993).

44. Toher, J.G., G.D. Lanois, and H. Sauer, *High Efficiency, Dry Flue Gas SOx/NOx Removal Experience with the Lurgi Circulating Fluid Bed Dry Scrubber - A New, Economical Retrofit Option for U.S. Utilities for Acid Rain Remediation*, unpresented paper, 1991 SO_2 Control Symposium, Washington, D.C. (Dec. 3-6, 1991).

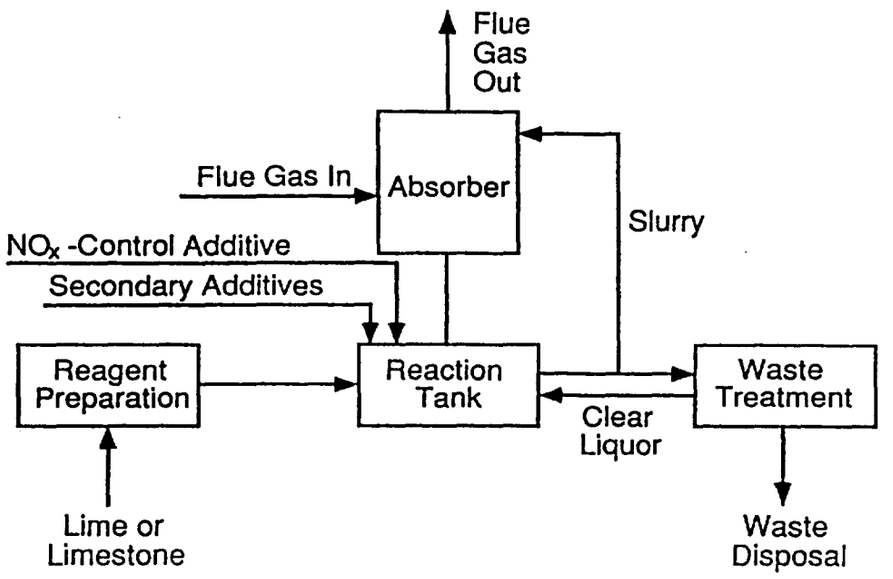

Figure 1. Wet FGD/Metal-Chelate Process

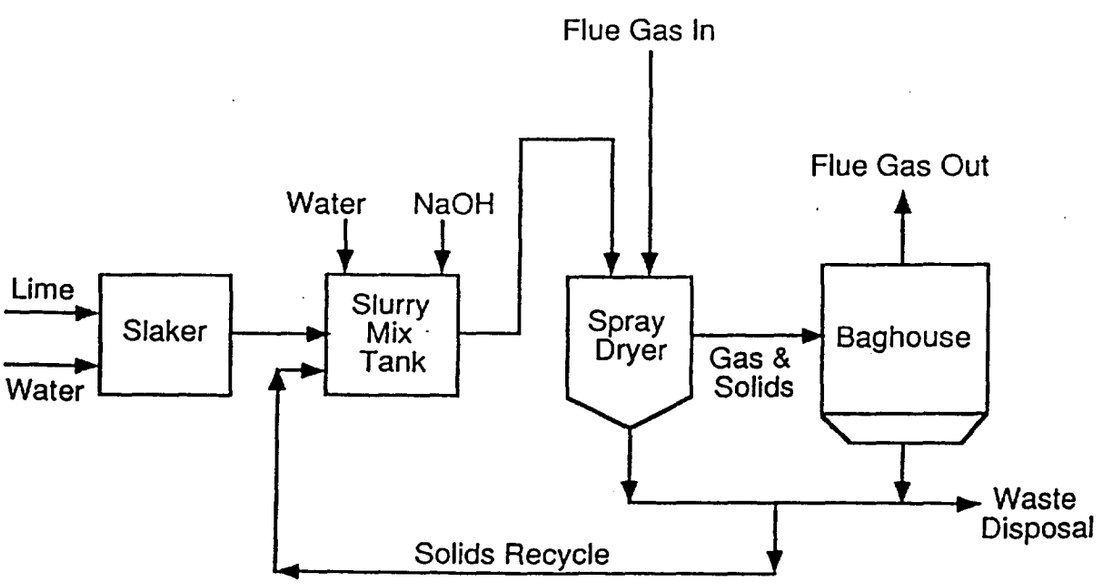

Figure 2. Modified Spray-Dryer Process

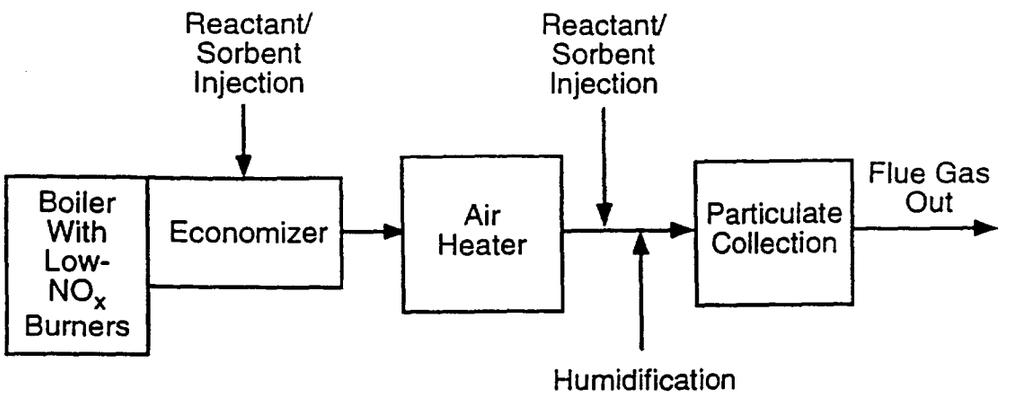

Figure 3. Integrated Dry-Injection Process

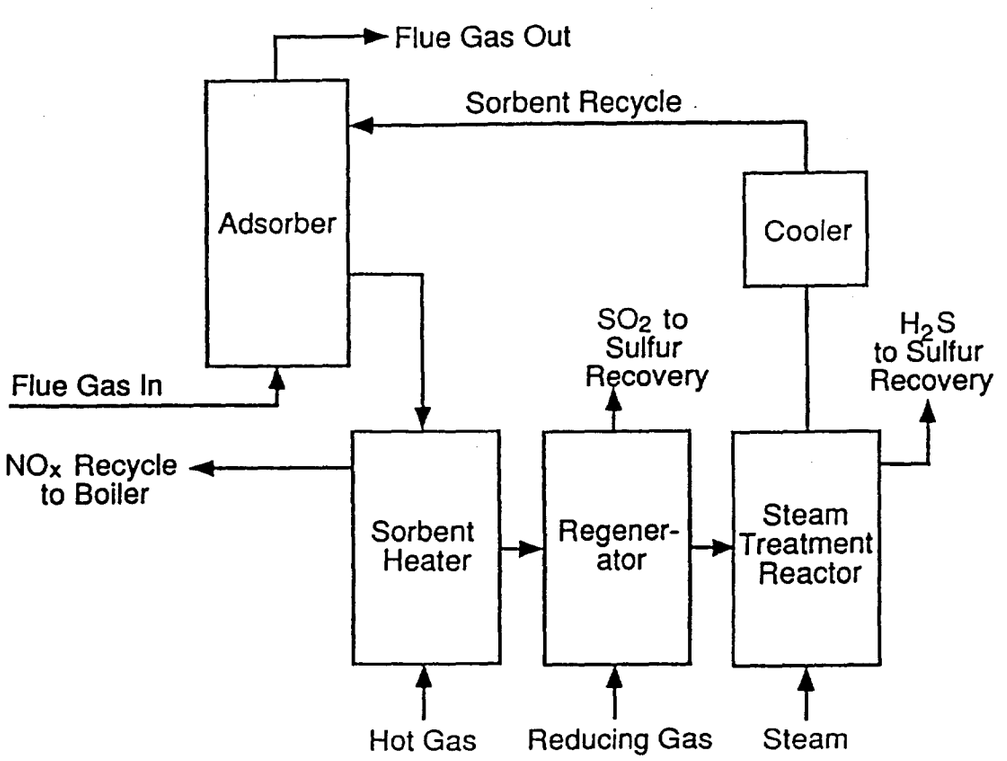

Figure 4. NOXSO Process

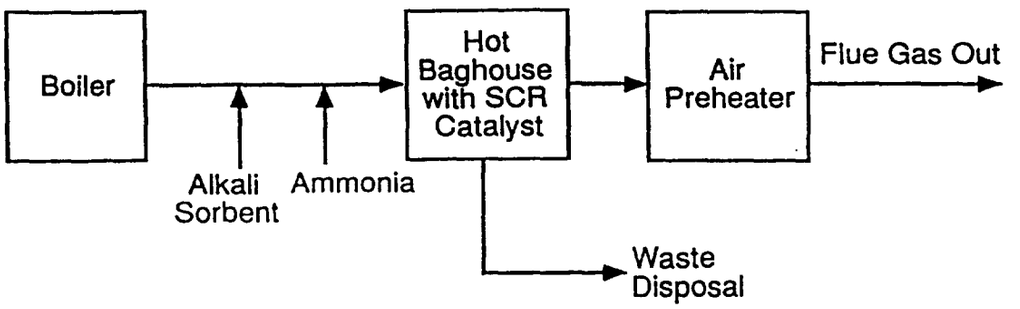

Figure 5. SNRB Process

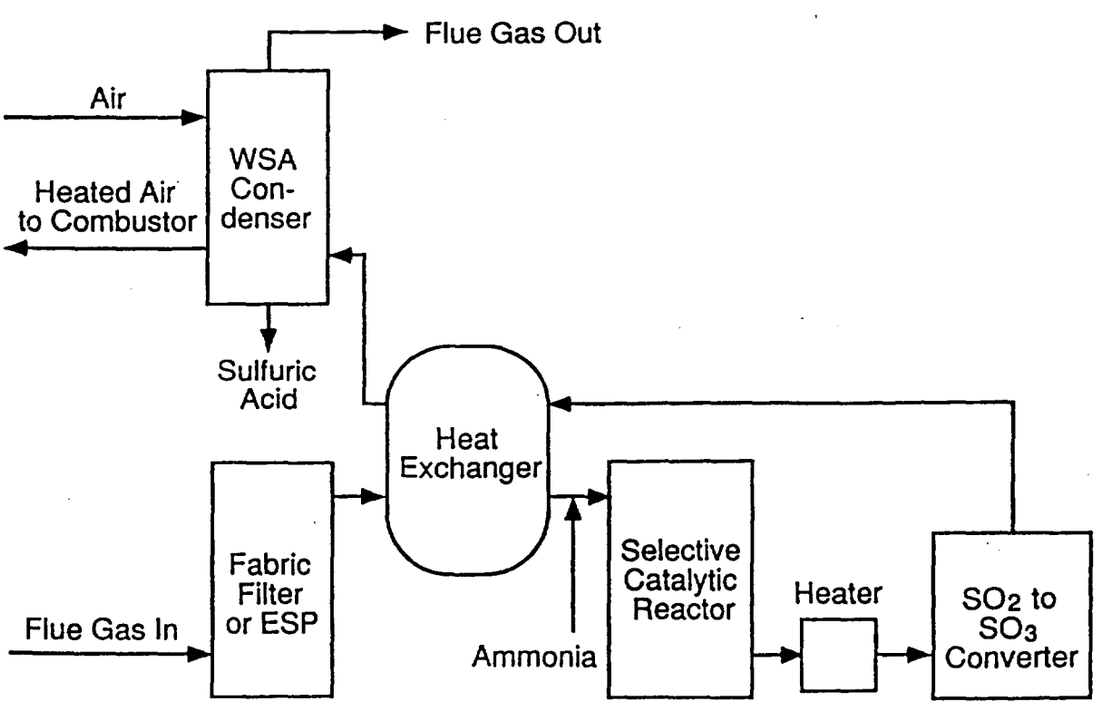

Figure 6. SNOX Process

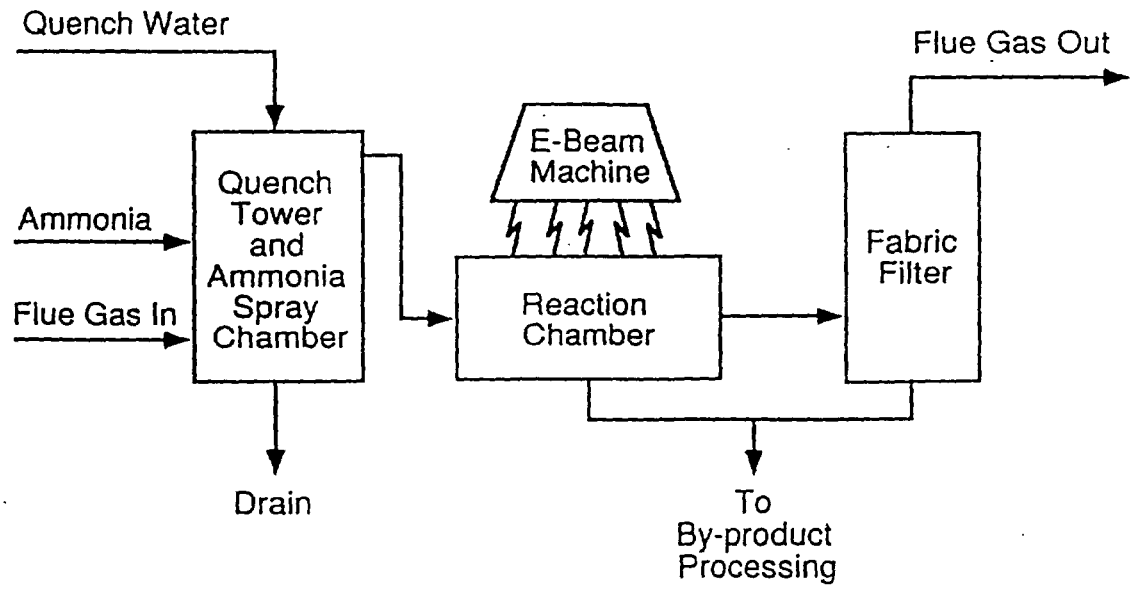

Figure 7. E-Beam/Ammonia Process

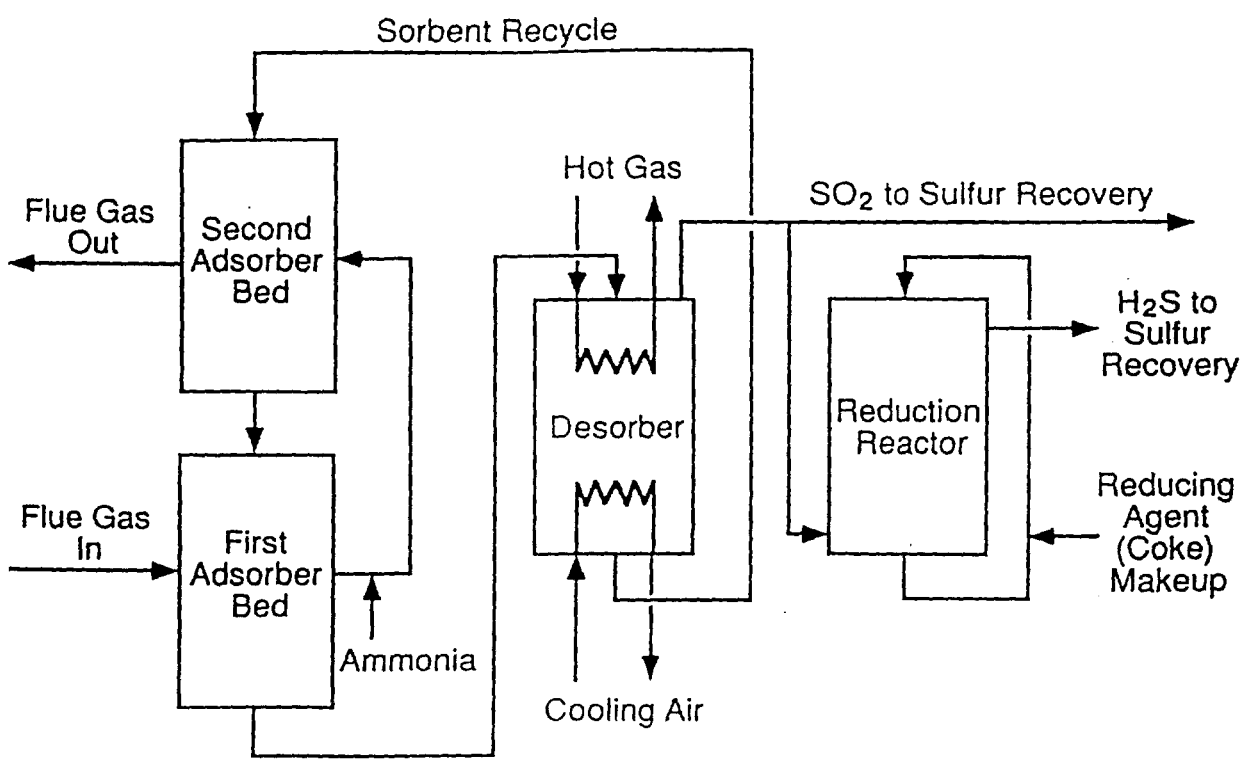

Figure 8. Dual-Bed Activated Coke Process