PN-ABY-031
ISN 93056

The Hashemite Kingdom of Jordan

Ministry of Water and Irrigation

Water Quality Improvement and Conservation Project

Industrial Audit:

Jordan Phosphate Mines Co. Ltd.

Harza Environmental Services, Inc.

Development Alternatives, Inc.

The Technical Assistance Team Includes:

Development Alternatives, Inc.
Science Applications International Corp.
Harza Environmental Services, Inc.
Development Associates, Inc.

USAID

United States Agency for International Development
Contract No. 278-0288-00-C-4026-00

November 1994

PN-ABY-031

AUDIT REPORT
JORDAN PHOSPHATE MINES CO. LTD.
JORDAN

Submitted to:
United States Agency
For International Development

Submitted by:
Development Alternatives, Inc.

Prepared for:
Amman Chamber of Industry, Jordan
Ministry of Water and Irrigation, Jordan

Prepared by:
Harza Consulting Engineers and Scientists
Chicago, Illinois, U.S.A.
in association with
Royal Scientific Society
Amman, Jordan

PREFACE/ACKNOWLEDGMENTS

This report is the result of a 4-week study/audit/evaluation of the Jordan Phosphate Mining Co., Jordan. The purpose of the study was to evaluate and identify potential pollution prevention/waste minimization and water conservation techniques which are appropriate. The executive summary on the following pages outlines the consultants findings and actions during the study/audit/evaluation.

Several individuals on the Water Quality Improvement and Conservation Project contributed to this report. Dr. Usama Mudallal of the Amman Chamber of Industry (Chamber); Engineer Rania Abdul Khaleq of the Ministry of Water and Irrigation (MWI); and Dr. Riyad Musa and Eng. Rafat Assi of the Royal Scientific Society of Amman; shared their knowledge with Mr. Krishna Mayenkar, P.E., of Harza Consulting Engineers and Scientists (Harza), Chicago, USA. These technical staff worked under direction of Dr. Shawn R. Niaki, Pollution Prevention Program Director, of Harza, who heads the WQIC component under which the study/audit/evaluation was housed. It is from their combined expertise that this report was possible.

Special appreciation is given to Dr. Mohammed Bani Hani, Secretary General of MWI, Eng. Qusai Qushad, Secretary General of the Water Autority of Jordan (WAJ); Mr. Khaldun Abuhassan, Chaiman of the Chamber; Mr. Walid Al-Khathib, Director General of the Chamber; Dr. Muwaffaq Saqqar, Project Coordinator; Dr. Raja Gadoun, Director of WAJ Laboratories; Eng. Randa Dufaha, of WAJ Laboratories; Eng. Hamed Abu Obeid, of WAJ, for hydrogeological contributions; the members of the PP/WM working group from WAJ including Eng. Abdul Wahab Matar, Eng. Marwan Al-Tal, Eng. Nabeel Hejazeen, Eng. Mohamad Lafi; and to Development Alternatives, Inc., as represented by Edwin D. Stains, Chief of Party; for their cooperation and confidence

EXECUTIVE SUMMARY

Development Alternatives, Inc. (DAI) under contract with the United States Agency for International Development (USAID) is performing an Industrial Wastewater Discharge Prevention Program (IWDPP) in Amman, Jordan. This Program is one of the four components of the Water Quality Improvement and Conservation Project (WQICP) funded by USAID. The program is being performed by DAI with full coordination between the Ministry of Water and Irrigation (MWI) and the Amman Chamber of Industry (Chamber). Harza Consulting Engineers and Scientists (Harza), Chicago, United Sates (U.S.), was retained by DAI to lead the IWDPP. Royal Scientific Society (RSS) of Amman, Jordan was selected as a local consultant to assist Harza with the IWDPP. This program includes conducting the Pollution Prevention/Waste Minimization (PP/WM) audits, Feasibility Studies (FS), and design demonstration units at selected industrial facilities.

Based on a ranking methodology, the PP/WM Committee selected ten industries with potential needs for PP/WM audits. One of these industries is the phosphate mining industry. The Harza/RSS team conducted an audit of the Al-Abiad Mining facility of Jordan Phosphate Mines Co. Ltd. (JPMC), representing the phosphate mining industry, as the first step of the IWDPP. This report summarizes the results of the audit.

PHOSPHATE BENEFICIATION PROCESSES AT AL-ABIAD MINE

The phosphate beneficiation process used at the Al-Abiad facility primarily consists of ore crushing and screening and further processing of the material <12.5 mm by countercurrent washing using fresh water. During this washing, coarser and very fine materials (slime) are removed and the product grade phosphate material (>250 mesh) with 70 to 72 percent phosphate content is recovered. The unit operations involved are wet screening, washing, cyclon separation, centrifuging, drying, and loading for transport.

AUDIT

The facility audit was conducted on August 16, 1994. The JPMC staff and audit team members toured and inspected the facility. Due to the complexity of the overall process and water management, several specific details remained unanswered during this two-day audit visit. To assist JPMC staff, the audit team developed a supplemental questionnaire, and Mr. Assi visited the facility again on August 24th.

AUDIT FINDINGS

The information collected during the JPMC facility audit through extensive personnel interviews, meetings and discussions with JPMC staff, site observations, and technical data provided by JPMC staff was compiled and thoroughly reviewed. Our findings are as follows:

Water Usage and Balance

The facility uses fresh water for several purposes, however, the bulk of the fresh water is used in the phosphate beneficiation process. The other usages are dust control, large vehicle wash station, domestic use, irrigation, workshop, and small vehicles wash station. The total water consumption is about 227 m^3/hr for 100 tons of ore processed. The plant is designed to process 400 tons of ore per hour. Therefore, the maximum water requirement could be in the range of 870 to 900 m^3/hr. At the time of audit the plant was operating at about 190-200 tons per hour capacity. The total fresh water use for 200 tons production is about 453 m^3/hr, 360 m^3/hr of which is used directly for beneficiation. This constitute about 79 percent of the total fresh water intake. Other 93 non-process usages constitute 21 percent of the fresh water consumed.

On an annual basis, the water consumption during 1993 was about 3.7 million m^3. During the same year 1,551,400 tons of phosphate was produced at an average recovery of 60 percent.

The major non-process related water consuming sources are:

- Equipment Cooling; and
- Dust Control.

These two sources consume about 64 m^3/hr or about 14 percent of the total fresh water demand.

Wastewater Discharges

The following wastewater discharges were identified at the Al-Abiad facility:

- Domestic wastewater and small vehicle washwater;
- Mechanical workshop wash water and domestic wastewater;
- Large vehicle washwater;
- Scrubber water;
- Thickener underflow; and
- Run-off water.

The disposal areas of concern primarily consist of ponds used to dispose of domestic sanitary wastes, vehicle washwaters, scrubber water, and thickener underflow. The sludge pond water used for irrigation may not be suitable for irrigation. The pond water sample analyzed exceeded irrigation standards for pH, total dissolved solids, and chlorides. The septic tanks and ponds containing wastewater are not lined nor do they have any interceptor systems to collect seepage. As a result wastewater stored in these ponds partially evaporates and partially percolates through the underlying soil. The vehicle washwater may contain toxic organics, petroleum hydrocarbons, and possibly metals. Domestic wastewater contains biodegradeable organics, human waste, and pathogens. These contaminants, should they reach drinking water aquifers, would contaminate groundwater adversely affecting health of the population served by the aquifers supplying potable water.

Air Emissions

A particulate emissions plume was very visible at the dryer exhaust stack. In general, the nature of the facility results in particulate emissions, particularly at crushing, grinding, loading, and drying operations. Since all other beneficiation processes at Al-Abiad mine are wet processes, air emissions are not a problem at the other operating areas.

Solid Wastes

The sources of solid wastes are:

- >12.5 mm reject material;
- >4.0 mm reject material; and
- <250 mesh (slime) material as thickener underflow.

Our initial evaluation of settling characteristics of slime indicated that it settles extremely well. At Al-Abiad mine, 24 tons of slime (solid content) and 8 tons of >4 mm reject material are generated per 100 tons of ore processed.

Storm Water Management

The run-off water generated at the site is not collected or monitored. Currently, run-off discharges to the Wadi, which drains into the Sultain Dam.

Data Gaps

Data gaps exist in water quality and water quantity measurements. No data are available on wastewater and sludges quality or quantity. Fresh water is monitored primarily at the groundwater well discharges and at the water supply to the beneficiation plant.

PP/WM AND WATER CONSERVATION OPPORTUNITIES

Based on the audit findings, several PP/WM and water conservation opportunities were identified. They are briefly presented below.

PP/WM Opportunities

Floor Drains: These discharges appeared to be resulting from not properly controlling washing and cleaning operations. Good housekeeping and employee awareness of the importance of PP/WM and water conservation play an important role in reducing water consumption in areas where no controls exist. Developing protocols, training employee to use less water, and providing incentives for those who follow water conservation measures are some of the key factors in reducing waste generation, water consumption, and pollution. The key to common

sense PP/WM is getting people to pay attention to reducing waste generation when and where it first occurs.

Other options are:

- Reduce spills, overflows, and leakages, by good housekeeping and planned preventive maintenance.
- Collect all floor drains in a tank(s) and monitor the flow after each application. Let the employee responsible for cleaning also be responsible for monitoring how much water is used per event.
- Install flow meters to monitor each water usage and record water volume for each application.
- Implement a dry vacuum system where feasible.
- Eliminate the cause of spillage.
- Sweep up dried material.
- Use timer controlled valves for controlling washwater.
- Utilize water saving equipment as much as possible. Different types of water saving equipment include flow regulating devices, flow shut-off valves, nozzles, overflow preventors, etc.
- Provide dikes, berms, and secondary containment for all storage facilities and operating areas. Collect all floor drains by implementing a properly designed drain collection system.
- Provide additional capacity to store floor drains and leaks, if necessary.
- Recycle and reuse all wash water efficiently as many times as possible before it is finally discharged in the form of limited blow down.

The above measures should reduce floor drains and washwater volumes.

Vehicle Washwaters: Small and large vehicle washwaters can be combined, treated, recycled, and reused.

Scrubber Water: The scrubber water also can be treated, recycled and reused.

Alternatively, the above discharges can be properly treated and discharged to the nearby Wadi.

Domestic Wastewater: Installation of engineered septic tanks and leach fields will improve the effluent quality and also protect groundwater quality.

Water Conservation Potential

Water conservation opportunities, in addition to those currently practiced by the JPMC facility, still exist. These opportunities are discussed below. It should be noted, however, that any aspect of water conservation should be weighed against its benefits and associated costs. Any water conservation measure which results in cost savings and directly affects pollution (i.e. prevents it from occurring) should be implemented first to protect the environment. The measures discussed below should be reviewed bearing in mind the above philosophy. In addition, further engineering studies will need to be performed to determine the feasibility of the measures prior to implementation.

Process Water Category:

1. The JPMC should continue to look for innovative process approaches to reduce the water consumption without affecting the product quality.

2. The slime sludge dewatering can be improved by an application of effective coagulants or adding belt or coil filters. This will reduce the water discharged to the pond.

3. The JPMC staff should carefully monitor and evaluate all process water usages and optimize them to attain additional water savings, if feasible.

4. Recycle scrubber water.

Non-Process Water Category: It should be noted that JPMC currently reclaims and recycles about 41.0 m^3/hr of water from cooling water systems and floor drain water. However, additional opportunities exist to conserve non-process water. The primary areas are:

1. Follow the PP/WM measures as described for floor drains.

2. Treat and recycle vehicle washwater.

3. Collect and use run-off water.

4. Explore using lake water for dust control, vehicle wash, and other suitable applications.

If all recommended PP/WM and water conservation measures are implemented, JPMC should be able to save up to 75 to 80 m^3/hr fresh water in addition to the 41 m^3/hr currently being saved. This will constitute about 25 percent of total current fresh water use of 453 m^3/hr, corresponding to 200 tons per hour of phosphate production.

RECOMMENDATIONS

To achieve PP/WM and water conservation objectives, our recommendations are:

1. Implement PP/WM and water conservation measures discussed above.

2. Develop a PP/WM and water conservation policy as part of the JPMC management operating philosophy and distribute it to all departments.

3. Implement the policy through specific goals and targets.

4. Make it each person's responsibility to identify PP/WM and water conservation opportunities.

5. Designate a PP/WM and water conservation coordinator to effectively implement this program.

6. Publicize success stories and reward employees that identify cost-effective PP/WM opportunities.

7. Train employees on aspects of PP/WM and water conservation that relate to their jobs through awareness and incentives.

8. Perform a periodic assessment of PP/WM and water conservation by key management personnel, the coordinator, and independent experts.

9. Show management commitment through the above actions and reinforce the policy through meetings and company functions.

10. Let the company "Mission Statement" include "Better Product through Environmental Protection and Water Conservation".

RECOMMENDATIONS FOR ITEMS FOR FEASIBILITY STUDIES

We recommend that the following items be considered for feasibility level studies:

- Vehicle washwater segragation, treatment, recycling and reuse;
- Closed-loop cooling water system implementation;
- Scrubber water recycling and reuse; and
- Use of lake water for dust control and vehicle washwater.

Data developed through the feasibility studies can be used for designing field testing demonstration.

TABLE OF CONTENTS

1.0 INTRODUCTION 1
- 1.1 Background 1
- 1.2 Objective 1
- 1.3 Report 2

2.0 PROCESS OVERVIEW 3
- 2.1 Phosphate Mining Industry in Jordan 3
- 2.2 Phosphate Beneficiation Processes in Al-Abiad Mine 4
  - 2.2.1 Mining 4
  - 2.2.2 Ore Processing 4

3.0 AUDIT PROCESS 6
- 3.1 Audit Coordination 6
- 3.2 PP/WM Background Material Preparation 6
- 3.3 Pre-Inspection Meeting 7
- 3.4 Audit 8
- 3.5 Post-Inspection Meeting 8

4.0 AUDIT FINDINGS 10
- 4.1 Water Usage and Balance 10
- 4.2 Wastewater Discharges 11
- 4.3 Air Emissions 12
- 4.4 Solid Wastes 12
- 4.5 Storm Water Management 13
- 4.6 Data Gaps 13
  - 4.6.1 Water Quality 13
  - 4.6.2 Water Quantity 14

5.0 POLLUTION PREVENTION/WASTE MINIMIZATION 15
- 5.1 Pollution Prevention/Waste Minimization-Water 15
- 5.2 Pollution Prevention/Waste Minimization-Air 18
  - 5.2.1 Wet Grinding 19
  - 5.2.2 Installation of Scrubbers 21

6.0 WATER CONSERVATION POTENTIAL 22
- 6.1 Cooling Water System 22
- 6.2 PP/WM Measures 23
- 6.3 Domestic Use 23
- 6.4 Process Optimization 23
- 6.5 Use of Lake Water 24

8

7.0 CONCLUSIONS AND RECOMMENDATIONS 25
7.1 Conclusions 25
7.2 Recommendations 26
7.3 Success Stories 27

8.0 FOLLOW-UP ACTIONS 29

9

APPENDICES

Appendix A Audit Questionnaire
Appendix B Supplemental Questionnaire
Appendix C Backup Information Provided by the Industry
Appendix D Background Material Report
Appendix E Applicable Water Quality Criteria
Appendix F Al-Abiad Mines Facility Photos

TABLES

Table 1 Current Design Production Capacities of Jordan Phosphate Rock Mines
Table 2 Fresh Water Balance, Al-Abiad Mine
Table 3 Thickener Underflow Sludge Analysis
Table 4 Analysis of Slime Pond Clear Water Used for Irrigation
Table 5 Air Emission Sources of Phosphate Rock Mining and Beneficiation

FIGURES

Figure 1 Phosphate Beneficiation Process Block Flow Diagram
Figure 2 Fresh Water Flow Balance, Al-Abiad Mine
Figure 3 Suggested Water Reuse and Recycle, Al-Abiad Mine
Figure 4 Suggested Treatment for Vehicle Washwater
Figure 5 Selected Phosphate Rock Emission Sources

1.0 INTRODUCTION

This report presents the findings of an audit conducted for pollution prevention and waste minimization (PP/WM) for a phosphate are processing facility (Al-Abiad Mines) owned and operated by the Jordan Phosphate Mines Co. Ltd. (JPMC), Jordan. The report also includes a project background and objectives, brief process descriptions, audit process details, potential for PP/WM and water conservation, conclusions, recommendations, and follow-up actions.

1.1 Background

Development Alternatives, Inc. (DAI) under contract with the United States Agency for International Development (USAID) is performing an Industrial Wastewater Discharge Prevention Program (IWDPP) in Amman, Jordan. This Program is one of the four components of the Water Quality Improvement and Conservation Project (WQICP) funded by USAID. The program is being performed by DAI with full coordination between the Ministry of Water and Irrigation (MWI) and the Amman Chamber of Industry (Chamber). Harza Consulting Engineers and Scientists (Harza), Chicago, United States (U.S.), was retained by DAI to lead the IWDPP. Royal Scientific Society (RSS) of Amman, Jordan was selected as a local consultant to assist Harza with the IWDPP. This program includes conducting the PP/WM audits, Feasibility Studies (FS), and designing demonstration units at selected industrial facilities.

The PP/WM techniques are defined as any techniques to prevent or reduce waste generation by source reduction or recycling activities. The activities must reduce either the volumes or the concentrations of pollutants generated prior to treatment, storage, or disposal of the waste.

Based on a ranking methodology, the PP/WM Committee selected ten industries with potential needs for PP/WM audits. One of these industries is the phosphate mining industry. The Harza/RSS team conducted an audit of the Al-Abiad Mining facility owned by JPMC representing the phosphate mining industry as the first step of the IWDPP. This report summarizes the results of the audit.

1.2 Objective

The objectives of conducting a PP/WM audit were to understand the water and wastewater management practices currently employed by JPMC at the Al-Abiad Mining facility, to identify waste sources, and to assess opportunities for PP/WM and water conservation that may exist at the facility.

The findings of the audit were used to develop recommendations and follow up actions to assist JPMC in assessing the extent of pollution. Suggested approaches for water conservation and process modifications to achieve additional PP/WM and wastewater treatment were provided.

1.3 Report

This report contains a description of the phosphate ore beneficiation process, audit procedures, audit findings, and conclusions derived from the audit findings. Recommendations and follow-up actions necessary to assess the extent of pollution as well as to implement PP/WM and water conservation measures at the Al-Abiad facility are also included.

Appendices A, B, and C of the report contain information collected during the audit, an additional questionnarie prepared to collect the water use information and the process and water balance information provided by JPMC, respectively. A copy of the Background Material Report is included, as Appendix D. Applicable regulatory standards for water quality are included as Appendix E. Appendix F contains photographs of the Al-Abiad mining facility. The reference material collected by Harza in the U.S., as part of this audit program is presented in a separate binder.

2.0 PROCESS OVERVIEW

The phosphate fertilizer industry is totally dependent on phosphate rock as its major raw material. After mining and preparation, the rock is used directly in the production of phosphoric acid, normal superphosphate, triple superphosphate, nitrophosphate, electric furnace phosphorus, and defluorinated animal feed supplements. Phosphoric acid is subsequently used to produce superphosphate, ammonium phosphate, complex fertilizers, superphosphoric acid, and dicalcium phosphate. The phosphate rock industry consists of mining and rock processing operations centered close to ore reserves.

Chemically, phosphate rock may be considered to contain a substituted fluorapatite, $3Ca_3(PO_4)_2 \cdot Ca_2F$. Nearly all phosphate ores contain a modified form of this structure in which some of the phosphate is replaced by fluoride and carbonate. The total fluoride content of typical phosphate rock is approximately 4 to 5% by weight, expressed as fluorine.

The ingredient of the rock that is of economic interest is tricalcium phosphate (TCP), $Ca_3(PO_4)_2$, also known in industry as bone phosphate of lime (BPL). The rock is usually graded on the basis of its BPL content (e.g., 62 BPL rock contains 62% TCP by weight).

Typical operations involved in the phosphate mining industry are crushing, grinding, screening, flotation, thickening, filtering, drying, bagging, and storage. The mining and beneficiation processes vary somewhat at different locations based on grade, screen analysis, and pebble concentrate in the feed.

2.1 Phosphate Mining Industry in Jordan

The JPMC was founded in 1934 as a private firm to exploit the phosphate reserves of the Russeifa area, 15 kilometers northeast of Amman. In 1953, JPMC was incorporated as a public share holding company jointly owned by the government of Jordan and the private sector. From 1953 until 1988 three other production sites were developed in the south Jordan, namely Alhassa mine (1962), Al-Abiad mine (1979), and Elshidiya mine (1988). The current yearly production by JPMC is approximately 7 million tons of phosphate rock ranging between 66 to 75% TCP. The design production capacities of these three operating mines are given in Table 1. Al-Abiad mine was selected for the PP/WM audit.

Phosphate mining in Jordan is typically open pit mining. An overburden layer is removed and a layer of phosphate rock is exposed. The rock is then removed from the deposit by dynamite blasting. The ore is usually hauled by truck to the processing plant.

The JPMC produces several grades of phosphate rock ranging from 66 to 75% TCP content in addition to the lower grades (62 to 66% TCP) produced to meet the special requirements of some customers. Upon completion of new beneficiation units at Elshidiya mine, scheduled for 1995, a higher grade production unit of approximately 77% TCP will be

installed. After 1995, the production of mine-oriented materials should continue to follow the increased production in Elshidiya mine through the year 2000, and substantially increase production after the year 2000. The production in Alhassa and Al-Abiad will stop by the year 2000.

2.2 Phosphate Benefication Processes in Al-Abiad Mine

The following section describes the phosphate mining and beneficiation processes used in Al-Abiad mine. Figure 1 illustrates these processes.

2.2.1 Mining

The overburden is drilled and blasted. Broken and loosened material is stockpiled and loaded into dump trucks. Sterile material is transported to waste dump areas. The uncovered phosphate bench is usually loosened by ripping and drilling and blasting, if necessary. The ore is loaded into dump trucks and hauled to crushing, screening, and processing areas at the Al-Abiad facility. The phosphate beneficiation process used at Al-Abiad is described below.

2.2.2 Ore Processing

Crushing and Screening: Raw phosphate from the mine sites is hauled to two jaw crushers, rated at 450 tons per hour each. All materials are crushed and screened where the oversized material >12.5millimeter (mm) is rejected and stockpiled for further treatment in the future. The <12.5mm material with 70 to 72% TCP is fed directly to the dryers. The lower quality material with the TCP content 66 to 68% is fed to the beneficiation facility.

Beneficiation and Drying: The standard grade phosphate from the crushing and screening operations, containing 70 to 72% TCP, is fed directly to rotary cascading dryers operated with heavy fuel oil. A dry product is produced which contains 1-3% moisture and is known as unbeneficiated grade phosphate. Phosphate ores which contain 66 to 68% TCP are fed to the beneficiation process for upgrading.

The beneficiation process at Al-Abiad primarily consists of counter current washing of <12.5mm material using fresh water and removing coarser and very fine material (slime) to recover the product grade phosphate material (>250 mesh). The unit operations involved are wet screening, washing, cyclone separation, centrifuging, and drying.

The crushed ore <12.5mm size is mixed with the thickener overflow and is wet screened to remove coarser material >4 mm in size. The undersize material (<4 mm) is fed to the Stage I washing operation.

At Stage I, material <4mm is washed with the centrate from centrifuges and overflow from Stage II cyclones. The slurry is fed to cyclone separators where <250 mesh is rejected through the cyclones overflow and discharged to thickeners. The underflow containing >250 mesh material and less than 10 percent of <250 mesh material is fed to Stage II washing operation.

In Stage II, the <250 mesh material is washed using fresh water. The slurry is then fed to Stage II cyclone separators where most of the <250 mesh material is removed and the overflow is recycled back to the Stage I washing operation. The >250 mesh material from Stage II cyclones is discharged to centrifuges for dewatering.

The centrifuging produces phosphate cake with about 18 to 20 percent moisture. The centrate is pumped back to the Stage I washing operation.

The cake produced from centrifuges is stored in a pile for a few days to further reduce its moisture content to about 16 percent. The partially dried cake is fed to heavy fuel oil-fired dryers to produce beneficiated grades of 70 to 72% TCP.

Fines from only one dryer are separated using a wet scrubber. This dryer is used only to treat standard grade TCP produced directly after crushing and grinding operation. Three other dryers treating beneficiated phosphate cake do not have scrubbers and the air is emitted directly to the atmosphere.

The Al-Abiad facility has four process trains, each with the capacity to process 100 tons of ore per hour. At the time of audit, the facility was operating at a little less than 50 percent of the capacity due to reduced market demand.

3.0 AUDIT PROCESS

The objective of the audit was to identify the potential for PP/WM, wastewater cleanup, and opportunities for water conservation appropriate for the phosphate mining facility. The following subtasks were undertaken to complete the audit report:

- Audit Coordination;
- PP/WM Background Material Preparation;
- Pre-Inspection Meeting;
- Audit;
- Post-Inspection Meeting; and
- Audit Evaluation Report.

Activities conducted under each of the subtasks are briefly described below.

3.1 Audit Coordination

The Chamber informed JPMC about the intent and schedule of the audit. An audit questionnaire specifically developed for this PP/WM project (Appendix A) was included with the request for JPMC to complete the questionnaire prior to the audit. Because it was not possible for the JPMC to supply the requested information in a timely fashion, JPMC was requested to furnish an overall flow balance, process flow diagram, and facility layout. This information was furnished to the audit team prior to the audit visit and is included in Appendix C.

3.2 PP/WM Background Material Preparation

The objective of preparing the Background Material Report was to identify the currently available techniques and clean technologies being practiced for PP/WM in the phosphate mining industry in the U.S. and elsewhere in the world. This objective was achieved by performing a comprehensive literature review.

The literature review included the following sources: published literature, personal contacts with the U.S. Environmental Protection Agency (EPA), and conversations with personnel within the U.S. phosphate mining industry. The literature consisted of PP/WM related articles, journal articles, conference proceedings, EPA documents and communications, and books on pollution control.

As part of this task, Harza contacted several national and international companies to determine if they have implemented any State-of-the-Art PP/WM techniques or water conservation measures. As expected, the response was not very positive. Harza is continuing, however, the search on these issues and will forward to the PP/WM Committee any new information that becomes available.

Based on the facility operation information that was made available to us and the information gathered through the available literature, Harza prepared the Background Material Report (Appendix D). The Report included general information on phosphate mining and processing as well as specific information on the process used by JPMC. Since not all the JPMC process details were available at the time of preparation of the Background Material Report in the U.S., accuracy of specific details was questionable. The intent, however, was to collect as much information as possible prior to conducting the audit.

The Background Material Report also contained preliminary suggestions for PP/WM and water conservation based on the limited information available at the time.

Harza also prepared a report containing appropriate reference material, which was gathered through our extensive literature search. The report is submitted separately. This reference material contains process and waste management practices used in the similar facilities located primarily in the U.S.

The knowledge gained through the extensive literature search and process information provided by the PP/WM Committee allowed Harza to develop a good understanding of the process as well as problems associated with water and waste management, including air emissions and solid wastes at typical phosphate mining and fertilizers manufacturing facilities.

3.3 Pre-Inspection Meeting

The Al-Abiad facility audit, including the pre-inspection meeting, was conducted on August 16, 1994 at the JPMC facility. The initial audit team consisted of the following personnel:

Dr. Usama H. Mudallal	Amman Chamber of Industry
Ms. Rania Abdul Khaleq	Ministry of Water and Irrigation
Dr. Shawn Niaki	Program Director, DAI (Harza)
Mr. Krishna Mayenkar	Lead American Consultant (Harza)
Dr. Riyad Musa	Local Consultant (RSS)
Mr. Rafat Assi	Local Consultant (RSS)

The intent of this meeting was to inform JPMC staff about the conduct and objective of the audit and also to understand, from the JPMC staff, process details as they relate to fresh water utilization, wastewater generation, treatment and disposal, water recycling and reuse, and the overall water management at the facility. The audit team explained to JPMC staff the purpose of audit. The JPMC Plant Manager explained to the audit team the entire beneficiation process using the facility model as a reference.

A general discussion was held on water usage within the facility. JPMC staff explained the major water consuming sources at the facility. Since water is the principal component of the beneficiation process, the amount of water required to carry out washing and material

separation process is critical. The non-process related water usages and other water requirements were also discussed.

3.4 Audit

The facility audit was conducted on August 16, 1994. The JPMC staff and audit team members toured and inspected the facility starting with the crushing and grinding operation followed by main agitation, Stages I and II washing and separation, centrifuging, thickening, product drying, and thickened sludge disposal. The audit team also collected a sludge sample to perform cursory thickening studies and to evaluate sludge settling characteristics.

Upon completion of the facility tour, discussion continued on overall water usage and wastewater management practices currently employed. Some of the specific details, however, remained un-answered during this one-day audit.

The audit team requested JPMC staff to provide specific details on specific water usages. To assist JPMC staff, the audit team developed an audit questionnaire (Appendix A) and a supplemental questionnaire (Appendix B). Additionally, Mr. Rafat Assi visited the facility again on August 24th, 1994. During this second visit, several previously un-answered questions were resolved. Mr. Rafat Assi also attempted to complete the audit questionnaire as appropriate and applicable to the facility.

3.5 Post-Inspection Meeting

The audit efforts were extended from one to two days. The post-inspection meeting, however, was held on August 16, 1994. The JPMC staff and audit team members reviewed and discussed the preliminary findings based on the facility tour and information provided by JPMC staff. Discussions at the meeting were primarily concerned with the thickener underflow, the use of final sludge pond overflow for irrigation, floor drains, pump cooling water, scrubber water, and domestic water.

The initial assessment by the audit team was that the fresh water usage per ton of product produced at Al-Abiad mine was considerably lower compared to similar facilities in the U.S. and elsewhere. The sludge (slime) sample collected indicated excellent settling characteristics contrary to the extensive problems in disposing of slime faced by similar industries.

Based on the initial evaluation, the audit team identified the following areas with potential for PP/WM:

- Scrubber Water;
- Sanitary Wastes; and
- Sludge Holding Pond.

A copy of the background material was furnished to JPMC staff.

The information and waste management analyses in the subsequent sections of this report are based on the knowledge gained through the audit activities and support provided by JPMC staff.

4.0 AUDIT FINDINGS

The information collected during the facility audit through personnel interviews, discussions with JPMC staff, site observations, and technical data provided by JPMC staff was compiled and thoroughly reviewed and our findings are presented below.

4.1 Water Usage and Balance

The facility uses fresh water for several purposes, however, the bulk of the fresh water is used in the phosphate beneficiation process.

The fresh water is obtained primarily from groundwater wells. There are two groups of wells; one group supplies water for the process, dust control and large vehicle wash station; the second group supplies water for domestic use, irrigation, the workshop, and small vehicles wash station. The total water consumption is about 227 m^3/hr for 100 tons of ore processed. The plant is designed to process 400 tons of ore per hour. Therefore, the maximum water requirement could be in the range of 870 to 900 m^3/hr. Since at the time of audit the plant was operating at about 190-200 tons per hour capacity, the process flows and other flows identified for operational requirements are based on the 200 tons per hour operating capacity.

The total fresh water use for 200 tons production is about 453 m^3/hr, 360 m^3/hr of which is used directly for beneficiation. This constitute about 79 percent of the total fresh water intake. Other non-process water usages are listed below and shown in Figure 2.

Item	Usage Rate, m^3/hr
1. Equipment Cooling	37
2. Dust Control	27
3. Domestic Use	8
4. Scrubber	6
5. Vehicle Wash	4
6. Irrigation	4
7. Floor Wash	4
8. Mechanical Workshop	3
Total Non-Process Water Usage	93

The non-process related water usage constitute about 21 percent of the fresh water consumed.

The above analysis shows that major non-process related water consuming sources are:

- Equipment Cooling; and
- Dust Controls.

These two sources consume about 64 m^3/hr or about 14 percent of the total fresh water demand. The remaining six sources consume about seven percent of the total fresh water. The overall water balance is presented in Table 2 and shown on Figure 2.

On an annual basis, the total fresh water consumption during 1993 was about 3.7 million m^3. During the same year 1,551,400 tons of phosphate were produced at an average recovery of 60 percent.

4.2 Wastewater Discharges

The following wastewater discharges were identified at the Al-Abiad facility:

- Domestic wastewater and small vehicle washwater;
- Mechanical workshop wash water and domestic wastewater;
- Large vehicle washwater;
- Scrubber water;
- Thickener underflow; and
- Run-off water.

Domestic wastewater and other wastewater generated at the mechanical workshop should have characteristics similar to the sewage generated elsewhere including, high chemical oxygen demand (COD), high biological oxygen demand (BOD), high total suspended solids (TSS), and possibly other organics including oil and grease. Wastewater from the mechanical workshop may also contain solvents if they are used to clean mechanical parts.

The wastewater generated from the vehicle washers is expected to contain suspended solids, oil and grease, volatile organic compounds such as benzene, toluene, and xylene, other petroleum hydrocarbons, phenols, and high COD.

The scrubber water is expected to contain primarily high suspended solids. Another parameter that may require monitoring is pH.

The thickener underflow is expected to have high TSS, phosphates, and possibly chlorides. One sample collected during the audit and chemically analyzed showed about 7.5 percent TSS and 494 milligrams per liter (mg/l) chlorides. Fluorides were very low and phosphates

(ortho) were 4.4 mg/l. pH was slightly alkaline at 8.3. Table 3 contains the sludge sample analysis.

The run-off water generated at the site is not collected or monitored. It will have large TSS, and possibly high phosphates and chlorides.

The disposal areas of concern primarily consist of ponds used to dispose of domestic sanitary wastes, vehicle washwaters, scrubber water, and thickener underflow. The sludge pond water used for irrigation needs evaluation to ensure its suitability for the application. The pond water sample analyzed exceeded irrigation standards for pH, total dissolved solids, and chlorides as shown in Table 4.

The septic tanks and ponds containing wastewater are not lined nor do they have any interceptor systems to collect seepage. As a result wastewater stored in these areas partially evaporates and partially percolates through the underlying soil. The septic tanks located in Jordan are, as we understand, unlined excavations where human and other wastes are anaerobically biodegraded, while liquid percolates through the subsurface soil. The accumulated sludge is hauled away periodically by authorized haulers and disposed at unknown locations. Over the years these percolated wastes may have reached fresh water aquifers underlying the facility.

The vehicle washwater may contain toxic organics, petroleum hydrocarbons, and possibly metals. Domestic wastewater contains biodegradable organics, human waste, and pathogens. These contaminants, should they reach drinking water aquifers, would contaminate groundwater adversely affecting health of the population served by the aquifers supplying potable water.

4.3 Air Emissions

A particulate emissions plume was very visible at the dryer exhaust stack. In general, the nature of the facility results in particulate emissions, particularly at crushing, grinding, loading, and drying operations. Since all other beneficiation processes at Al-Abiad mine are wet processes, air emissions are not a problem at the other operating areas.

4.4 Solid Wastes

The sources of solid wastes are:

- >12.5mm reject material;
- >4.0mm reject material; and
- <250 mesh (slime) material in thickener underflow.

These solid wastes are essentially by-products of the ore benefication process. The generation of these solid wastes, therefore, can not be minimized or eliminated. Based on the quality of ore, the coarser and finer portions which do not contain recoverable phosphates will be generated at varying quantities. The finer material which primarily contains clay particles and colloidal material is discharged as slime through the thickener underflow.

Our initial evaluation of settling characteristics of slime indicated that it settles extremely well. Most mining companies in the U.S. and elsewhere find slime disposal as one of the major problems. Phosphate slime, which constitutes about 25 to 30 percent of the total ore processed, does pose a solid waste disposal problem.

At Al-Abiad mine, 24 tons of slime (solid content) and 8 tons of >4mm reject material are generated per 100 tons of ore processed.

Due to excellent settling characteristics of slime, the facility is able to dewater the slime to the greatest possible extent in thickeners and discharge it to the pond at 10 to 11 percent solid consistency. In our opinion, this is excellent thickener performance. A sludge settleability test was conducted to determine if any improvements can be made in sludge settling characteristics. The results indicated that the sludge settling characteristics are at their optimum. Any additions of coagulating agent will actually reduce the settling velocity. Specific details of the settling test conducted are presented in Appendix A.

4.5 Storm Water Management

Al-Abiad mine does not have any storm water management plan at this time. Storm water at the facility follows natural gradient and contours and flows across the site.

4.6 Data Gaps

Data gaps exist in water quality and water quantity measurements as noted below.

4.6.1 Water Quality

No data are available for:

- Small vehicle washwater discharge;
- Large vehicle washwater discharge;
- Domestic wastewater discharge;
- Wastewater to septic tanks;
- Septic tank effluent;
- Pond overflow to irrigation (except chlorides); and
- Scrubber water discharge.

4.6.2 Water Quantity

Flows currently measured include all groundwater well flows and water supply to the beneficiation plant from the main water storage tank.

Additional flows that require monitoring include:

- Small vehicle washwater flow;
- Large vehicle washwater flow;
- Domestic wastewater discharge to pond;
- Domestic wastewater discharge to the septic tank;
- Irrigation water supply;
- Cooling water supply; and
- Floor washwater.

The water flow data currently available are best estimations based on JPMC staff experience.

5.0 POLLUTION PREVENTION/WASTE MINIMIZATION POTENTIAL

The terms pollution prevention and waste minimization are sometimes used interchangeably, but each term has different meaning. Pollution prevention means to prevent pollution from occurring in the first place. It costs 10 to 100 times more to treat pollution once it is created than to avoid generating it. By employing waste minimization techniques, less pollution will be created, thus reducing the cost of treating the same.

At the Al-Abiad facility, PP/WM opportunities exist and are discussed in the following sections.

5.1 Pollution Prevention/Waste Minimization - Water

PP/WM opportunities exist for vehicle washwater, scrubber water, thickener sludge disposal, and storm water discharge. The following actions can be taken for pollution prevention and waste minimization.

PP/WM Actions

1. Segregation of small vehicle washwater from domestic wastewater and combining it with large vehicle washwater.

2. Implementing treatment of vehicle washwater to remove anticipated contaminants (see Figure 4) and reusing treated water for floor washing or any other suitable in-plant operational requirements, thus completely eliminating use of the present pond.

3. Closing the existing ponds by properly excavating contaminated soil and sludge that may have accumulated at the bottom, disposing of it in an appropriate landfill or encapsulating it in a properly engineered on-site disposal facility, and backfilling the pond with clean soil. Alternatively, upon removing the accumulated sludge, the pond could be lined and converted to a new pond to be used to store any process water for recycling purposes.

4. Recycling scrubber water by providing settling and filtration treatment, if necessary, and eliminating the pond currently used for its disposal.

5. Closing the scrubber water pond and domestic wastewater pond by excavating contaminated soil and sludge that may have accumulated at the bottom, disposing of it in an appropriate landfill, backfilling the ponds with clean clay type backfill material, and providing proper run-off controls to minimize percolation of water through residues. Alternatively, upon removing the accumulated sludge, the ponds could be lined and converted to new ponds for storage of scrubber water, other process water, or run-off for recycling purposes.

6. At present, no system exists to collect run-off from the operating areas or to monitor its quality. Currently, run-off discharges to the Wadi, which drains into the Sultain Dam. We believe that by properly grading areas around the operating facility and constructing appropriate trenches, facility run-off can be collected and diverted through a single outfall, which can be monitored for water quality.

   The run-off also can be diverted to a lined storage pond and can be reused and recycled to satisfy some of the operating requirements. The pond can be used to remove suspended solids as well as to store water, if not needed for operations. The pond can be provided with an outlet to allow an operator to discharge stored run-off water, if necessary. The outlet can be used as a sampling point to monitor the water quality

7. Provide berms or dikes around liquid storage tanks and phosphate storage piles to contain leaks and run-off water. The accumulated liquids can either evaporate or be discharged at a controlled rate.

8. Eliminate the cause of spillage. Do not just wash it down the drain.

9. Sweep up dried materials. Do not flush to the drain.

10. Utilize water conservation equipment as much as possible. Different types of water saving equipment include:

    - Flow Regulating Devices. When these devices are inserted into a water line, increasing pressure restricts the flow to a constant needed rate.

    - Flow Shut-Off Devices. The most useful devices are finger operated shut-off valves, or guns, with nozzles on the ends of cleanup hoses. When finger pressure is released, water flow stops.

    - Nozzles. Nozzles use less water than drilled pipe sprays. For faster, more efficient cleaning, a "Vee" type nozzle is preferred, as this nozzle forms a fan shaped chisel pointed spray.

    - Overflow Preventors. These devices are employed to prevent overflowing of containers, tanks, or reservoirs, thus stopping waste of water or release of wastewater. Most of these devices are usually float or electronic probe operated.

11. Install flow meters to monitor all wastewater flows so that appropriate waste flow reduction measures can be evaluated and implemented.

12. Sludge pond water quality may not be suitable for intended irrigation application and such use should be carefully monitored, and evaluated and additional treatment if necessary, implemented. A sample collected and analyzed during the audit indicated high chlorides, pH and dissolved solids (see Table 4).

Recommended water reuse and recycling systems are shown in Figure 3. A conceptual treatment process recommended for the vehicle washwater is presented in Figure 4.

As an alternative to recycling and reusing, the small and large vehicle washwaters, domestic wastewaters, and scrubber water can be segregated and treated to meet groundwater recharge standards and discharged to appropriate Wadis or treated to meet irrigation standards and used accordingly.

Groundwater and Subsurface Pollution Prevention

As discussed in the previous section, the common problem associated with the management of wastewaters at this facility is that all wastewaters are discharged to unlined and non-engineered containments referred to as ponds. Depending upon the underlying geology, these wastewaters can percolate through the underlying soil and eventually contaminate subsurface aquifers. If the aquifers are used for drinking purposes, the water quality could adversely affect human health. The constituents of concern in the wastewaters noted above may include;

- Toxic volatile organic compounds (although they are expected to volatilize under high atmospheric temperature conditions, small amounts, however, could percolate through soils under low temperature conditions)
- Toxic semivolatile petroleum hydrocarbons such as naphthalene
- Organics exerting COD and BOD
- Pathogens, bacteria
- Phosphates
- Chlorides, and
- Nitrates

The following actions are therefore necessary to prevent groundwater and subsurface soil contamination:

1. Installation of new engineered septic tanks and leach field.

2. Rediverting domestic wastewaters to new concrete septic tanks.

3. Installation of upgradient and downgradient observation wells at each of the pond locations to monitor the upper two to three drinking water aquifers and immediately implement a monitoring program.

4. If the groundwater monitoring results indicate that groundwater is impacted due to leachate originating from the waste disposal ponds, existing ponds will need to be closed using proper clay cover, run-off control through proper grading and erosion control. New ponds with an engineered clay liner, dikes, and seepage collection and groundwater monitoring systems will be required to manage the wastes.

5.2 Pollution Prevention/Waste Minimization - Air

The ore beneficiation process involves handling large amounts of soil, clay, and pebbles associated with ore material. Particulate emissions are, therefore, inevitable at crushing, grinding, drying, and loading operations. Vehicular traffic also causes dust formation contributing to air pollution. The other beneficiation processes at Al-Abiad mine, including the outside storage of moist phosphate cake, do not pose air emission problems due to wet operating conditions.

The existing air emissions abatement practices involve control of dust due to traffic and other plant activities by water spray. This is an acceptable technique. There are no controls at the crushing and dry screening operations. Only one of the four dryers is fitted with a scrubber. Other dryers discharge exhaust air directly to the atmosphere. During the audit, a particulate plume at the operating dryer was visible.

The major air pollutant of concern, emitted by the production of chemical and fertilizer minerals, is respirable particulate matter (less than 7-um geometric mean diameter). These particulates can contain free silica, the crystalline silicon dioxide which is mostly quartz, tridymite, and cristobalite.

The American Conference of Government Industrial Hygienists (AGGIH) has suggested a threshold limit value (TLV) for respirable particulates as shown in the following equation:

$$TLV = \left(\frac{10}{\%quartz + 2} \right) \text{ (for } \%quartz > 1\%)$$

Where TLV = threshold limit value, mg/m^3
% quartz = percent of quartz as respirable dust.

Respirable particulates with less than 1% quartz are termed "inert" and a TLV of 1 mg/m^3 is suggested for these. The criteria for crystalline silica published by the National Institute of Occupational Safety and Health (NIOSH), a U.S. organization states that occupational exposure shall be controlled so that no worker is exposed to a time-weighted average concentration of free silica greater than 50 ug/m^3, as determined by a full shift sample for up to a 10-hr workday, 40-hr workweek. In addition, particulate matter is one of the air quality criteria and has a 24-hr primary ambient air quality standard of 260 ug/m^3.

The sources of air emissions during phosphate rock mining and processing are illustrated in Figure 5. The emission factors which correspond to each source are summarized in Table 5. The emission factors are developed based on mining operations monitored and studied in the U.S.

The PP/WM opportunities, therefore, exist during crushing, grinding, and drying and are described below.

5.2.1 Wet Grinding

New methods to collect dust emissions from beneficiation plants, particularly in the rail car loading area, are being developed.

The development of hydrometallurigical processes to recover phosphorus from matrix or concentrates by direct acidification may make it possible to improve recovery rates and reduce water disposal problems. New mining and processing techniques may be developed to utilize the potential resources in Jordan.

Wet grinding is one of the technologies being considered to minimize air pollution for phosphate rock processing facilities and is described below.

Wet Grinding: The most promising air pollution control technique for dryers and calciners is the recent move toward wet grinding of rock for the manufacturing of wet-process phosphoric acid (WPPA). The rock is ground in a water slurry and then added to the WPPA reaction tanks without drying. This has not been done previously because the water entrained with the ground rock would require a stronger acid in the WPPA reaction (or be removed by evaporation) to maintain the 54% P_2O_5 strength needed for production of fertilizer.

Historically, 93% sulfuric acid has been diluted to 58% for the WPPA reaction, prior to addition to the reactor to permit removal of the heat of dilution. If added to the reactor at 93% strength, the heat of dilution coupled with the heat of reaction would exceed the capacity of the vacuum flash cooler used for temperature control. Also, it was widely accepted that the higher temperatures would result in formation of smaller crystals of waste gypsum which would complicate the separation of product acid from waste gypsum.

Two companies have overcome their reservations about the wet grinding process. They have designed larger flash coolers on the reactors to remove the heat of dilution and have found no significant difference in the crystal size of the gypsum. The products from the reactor are fed to the evaporators at 28 to 32% P_2O_5 acid, the same as the conventional WPPA process.

The major driving force for the process is not improvements in technology, but increasingly expensive fuel costs and stringent air emissions regulations. It is less expensive to treat the wet rock than to contend with high energy costs and increasingly stringent air regulations.

The impact of the wet grinding process could be far-reaching since about 70% of all phosphate rock ultimately used to produce fertilizer and 85% of the rock used for fertilizer must first be converted to phosphoric acid. If wet grinding proves to be a trend in the industry (and present indicators are that it will), the growth rate for phosphate rocks dryers will be negligible. Of course, there will continue to be requirements for dry rock unless ways are found to introduce wet ground rock into the processes other than WPPA. Much of this need may be filled by the capacity of existing dryers rather than construction of new ones. The need for emission controls on phosphate rock grinders, though diminished, will continue since the calcination process will probably continue at its current rate of growth and calcined rock must be ground.

Wet-rock grinding has five advantages:

1. Reduces about half the capital expense from receipt of underground wet rock through the point of feeding into the acid processing system.

2. Eliminates dry-rock dust pollution.

3. Improves fuel economy by 2.5 gallons per ton of ground phosphate rock, combined with electrical power savings to reduce operating costs per ton of P205.

4. Improves reliability, thus reducing the required amount of surge of ground rock.

5. Reduction in radiation levels will occur as dry-rock grinding is replaced with wet-rock grinding and dryers are eliminated. This will lower fugitive dust levels, thus lowering escaping radionuclides, and also result in lower radiation levels in the immediate vicinity of the grinders and the eliminated dryers.

The only problem created by wet grinding is the water balance around the plant. Wet grinding is a major water consuming process and adds 300 gallons per minute to an effluent discharge volume, which operators of WPPA plants are already finding difficult to control. Although the potential savings (elimination of the energy intensive phosphate rock dryer and its air pollution control system and air pollution controls for the grinder) is a strong incentive to the operator, it may be difficult to implement the wet grinding process in Jordan due to its limited water resources.

5.2.2 Installation of Scrubbers

At present, a scrubber is used only for one dryer. The JPMC should install scrubbers for the remaining three dryers to minimize air pollution through stack emissions. The scrubber water can be recycled with treatment, if necessary, for suspended solids removal.

6.0 WATER CONSERVATION POTENTIAL

The JPMC has instituted certain water reuse measures at Al-Abiad mine, including:

1. Reuse of centrifuge cooling water, thickener pump cooling water, and other process pump cooling water in the beneficiation process.

2. Reuse of floor washwater and drains in the beneficiation process.

The total estimated amount of reused water through the above sources is about 41.0 m^3/hr. This is about 9 percent of total 453 m^3/hr of fresh water consumed. However, opportunities do exist for additional water conservation measures and are present below.

6.1 Cooling Water System

We recommend that the entire cooling water system be converted to a closed-loop system. The amount of water used for equipment cooling is about 37 m^3/hr. We understand that the facility staff is currently optimizing the beneficiation operation to determine water requirements at each specific stage. We believe that the beneficiation process may not be affected by elimination of cooling water from process use for the following reasons:

1. Cooling water requirements for centrifuge and other equipment is about 28 m^3/hr. This water is fed to the Stage I washing operation. The total water currently required at Stage I is 704 m^3/hr. The 28 m^3/hr constitutes only 4% of the water demand at Stage I, which we believe can be reduced without affecting the process.

2. Similarly the thickener pump cooling water, at a rate of 9 m^3/hr, is circulated back to the thickeners. The thickeners receive a total flow of 647 m^3/hr of which 260 m^3/hr is returned to the main agitator and 387 m^3/hr is discharged to the final sludge disposal pond. We believe that the 9 m^3/hr flow, which is only 1.4 percent of the total 647 m^3/hr flow, must not be playing any significant role. Eliminating 9 m^3/hr should not affect the overall process.

Therefore, we recommend that Al-Abiad mine staff evaluate segregating cooling water from process water and install a closed-loop cooling water system, thus saving about 37 m^3/hr fresh water.

6.2 PP/WM Measures

The following PP/WM measures, if implemented, should result in water conservation:

1. The vehicle washwater should be treated and reused for any in-plant requirements such as floor wash, scrubber water, dust control, or beneficiation. It will result in saving 4 m^3/hr of fresh water.

2. Recycling the scrubber water will save 6 m^3/hr of fresh water. The recycled scrubber water can be discharged to the Stage I washing operation. As an alternative, JPMC can install a closed-loop scrubber water system.

3. Eliminating the cause of spillage.

4. Sweeping up dried material or using a dry vacuum system.

5. Utilizing water saving equipment as discussed in Section 5.1.

6. Installing flow meters to monitor wastewater flows and evaluating measures for waste reduction.

The above measures could save an additional 10 m^3/hr or more water.

6.3 Domestic Use

We believe that the domestic water use of 8 m^3/hr for personnel operating an 8 hour shift is rather high. Based on the available data, an operator uses about 0.1 m^3 to 0.2 m^3 of water during one shift. At Al-Abiad mine, an approximately 200 person staff works during each shift. The total water need for 600 persons should, therefore, be about 90 m^3 per day or about 3.75 m^3/hr. The dusty environment that the workers are exposed to may, however, force them to use more water and take longer showers. It is, however, our opinion that there exists some potential to conserve water and reduce water use, may be by 20 to 25%, to 6 m^3/hr. This reduction can be achieved by employee awareness, controlling water use by modifying shower heads and toilets, and reducing other water usages where feasible.

6.4 Process Optimization

Al-Abiad mine, as we understand, has undertaken an optimization process task to improve process efficiency and further conserve water. We encourage such efforts. It is recommended that JPMC continue to look for ways to optimize the beneficiation process by either installing new State-of-the-Art equipment or by modifying processes such as using belt filters to replace centrifuges or using suitable reagents to improve dewatering efficiencies of cyclones or centrifuges.

6.5 Use of Lake Water

The JPMC should also explore available options to use run-off water collected in an unnamed lake. We recommend that the lake water be used for dust control using tanker trucks and a local pumping station operating on a generator if power is not available. Other in-plant uses such as floor washing and vehicle washing also should be seriously considered. This will help JPMC to conserve groundwater.

In summary, the conservation measures suggested above should save 75 m^3/hr to 80 m^3/hr of fresh water. Recommended water reuse and recycling systems are shown in Figure 3.

7.0 CONCLUSIONS AND RECOMMENDATIONS

Fresh water plays a critical role in the phosphate beneficiation process. About 80 percent (360 m^3/hr) of the total fresh water consumed (453 m^3/hr) is required for beneficiation. The remaining 20 percent water (93 m^3/hr) is used for equipment cooling, vehicle washing, scrubber, floor washing, and irrigation. These figures are based on 200 tons of phosphate ore processed per hour.

7.1 Conclusions

Based on the audit findings, the following conclusions were made:

1. The following opportunities exist to conserve about 76 m^3/hr of fresh water:

   - Closed-Loop Cooling System, 37 m^3/hr;
   - Vehicle Washwater Recycle, 4 m^3/hr;
   - Scrubber Water Recycle, 6 m^3/hr;
   - Lower Domestic Use, 2 to 3 m^3/hr; and;
   - Use of Lake Water for Dust Control, 27 m^3/hr.

2. The fresh water consumed for beneficiation per ton of ore processed is only 1.8 m^3/hr, which is very low compared to water consumed by similar industries in the U.S. and elsewhere. High water consumption of as much as 7.0 m^3 per ton of product (i.e., equivalent to about 4 to 5 m per ton of ore processed) have been reported.

3. The low water consumption appears to be related to the excellent settling characteristics of slime. Slow settling characteristics of slime materials in the U.S. reduce the recyclable water resulting in higher fresh water demands.

4. Forty-eight tons of slime discharged to the disposal pond per hour with 387 m^3 of associated water indicates that the sludge is being discharged at about 12.4 percent consistency. Thickeners generating sludge with such a high solid concentration should be considered as best performers. There may be some room for improvement but it may not be cost effective. Such improvements can be achieved, if technically feasible, by using effective coagulating polymers to further improve slime dewatering characteristics and using belt filters or coil filters to dewater slime to 20 to 25 percent solids contents. However, it may be difficult to pump dry sludge at higher solids content.

5. Implementation of wastewater treatment and water recycle and reuse measures should result in prevention of subsurface contamination and conservation of water.

6. All untreated wastewaters are discharged to ponds or unlined excavations (septic tanks) without interceptor systems to collect and return seepage. This may cause significant wastewater percolation into underlying soil. The percolated water could reach aquifers through underground channels and contaminate groundwater. The wastewater management system, therefore, needs to be modified to minimize the impact on the underlying soil and groundwater.

7. The sludge pond water indicates that it is high in pH, dissolved solids, and chlorides and may not be suitable for irrigation.

8. Additional air pollution control devices such as scrubbers, if installed for the three dryers, should minimize air pollution.

7.2 Recommendations

To achieve the objective of the PP/WM and water conservation, the following recommendations are made:

1. Immediately initiate a wastewater monitoring program to determine the quality and quantity of wastewater discharged including sludge pond water used for irrigation.

2. Implement the PP/WM measures for vehicle washwater, domestic waste, floor drains, and scrubber water as recommended in this report.

3. Construct secondary containments, berms and dikes around storage tanks, process areas, and storage piles to contain leaks, spills, and run-off.

4. Implement run-off collection, transport, and monitoring systems. A storage pond is preferred which will allow JPMC to use surface water for operations, thus resulting in additional groundwater conservation.

5. Evaluate feasibility of installing a closed-loop cooling system. If it is economical and does not affect the process water balance, then implement the same.

6. Continue process optimization through use of new technologies and equipment to minimize fresh water requirements.

7. Install groundwater monitoring wells downstream of the following containments:

   - Large vehicle washwater discharge pond;
   - Domestic waste discharge pond;
   - Scrubber water discharge pond;

- Workshop waste septic tank; and
- Slime holding pond

Install a background monitoring well. All observation wells or clusters of observation wells, if required, should intercept underlying aquifers. Initiate a groundwater quality monitoring program. We recommend that groundwater quality be monitored quarterly for the first two years and then bi-annually at least three more years to determine if there is any groundwater pollution trend.

8. If the groundwater monitoring program indicates that the aquifer underlying the sludge pond is contaminated, a new sludge holding pond with proper lining and leachate collection system should be installed.

9. The pond overflow used for irrigation may not meet Jordan Standards 202 (see Appendix E). The JPMC should continue to monitor pond overflow quality, determine the type of crops being irrigated, and make sure the overflow quality is suitable for the crops.

10. Install scrubbers for the three remaining dryers to minimize air pollution.

11. Evaluate the feasibility of installing, in the future, a wet grinding system to minimize air pollution. Such a system, however, will result in creating more wastewater which will need treatment prior to recycle or discharge.

    Air pollution abatement sometimes works against water conservation. Company policies, regulatory requirements, and national mandate sometimes dictate the priorities.

12. We recommend that the following items be considered for feasibility level studies:

    - Vehicle washwater segregation, treatment, recycling and reuse;
    - Closed-loop cooling water system implementation;
    - Scrubber water recycling and reuse; and
    - Use of lake water for dust control and vehicle washwater.

7.3 Success Stories

A phosphate manufacturer implemented a closed-loop process water system for inorganic fluoride removal. Lime is added to process water to create calcium fluoride precipitate and then water is passed through thickeners and a filter press and recycled back to scrubbers for reuse. This resulted in saving 44 m³/hr of water ($870,000 per year) and $93,000 in water

treatment per year. Additionally, the Arab Steel Company in Amman, Jordan, upgraded its cooling water system to a closed-loop cooling system. This resulted in reducing the daily water consumption from 400 m day to 20 m day.

8.0 FOLLOW-UP ACTIONS

This section contains our recommendations to JPMC concerning follow-up actions required, in order of their priorities, to meet the objectives of the PP/WM and water conservation. The PP/WM activities generally are given priority over water conservation. However, due to limited water resources in Jordan, PP/WM and water conservation measures should be given equal importance. With this philosophy, the following actions are recommended in order of their priority:

1. Develop and implement a plan to monitor all wastewater flows by installing flow measuring devices and establishing sample collection procedures and protocols. All flows should be monitored monthly at least for a period of 12 months and quarterly thereafter. Flows should be recorded daily.

2. Segregate small vehicle washwater from domestic wastewater and install a combined vehicle washwater treatment and recycling system.

3. Design and implement a scrubber water recycling system using a new lined pond, if necessary.

4. Reduce floor drains by eliminating the cause of spillage, sweeping up dried materials, and utilizing water conservation equipment as much as possible such as flow regulation devices, flow shut-off devices, nozzles, and overflow preventers.

5. Design and install a closed-loop cooling system.

6. Reduce domestic water usage by employee awareness and using water saving equipment.

7. Perform and implement process optimization to reduce process water.

8. Design and construct a run-off collection, diversion, storage, discharge or recycling and monitoring system. Also explore using lake water for dust control, floor washing, and vehicle washing.

9. Develop a PP/WM water conservation policy as part of JPMC management operating philosophy and distribute it to all departments.

10. Implement the policy through specific goals and targets.

11. Make it each persons responsibility to identify PP/WM and water conservation opportunities.

12. Designate a PP/WM and water conservation coordinator to effectively implement the program.

13. Publicize success stories and reward employees that identify cost effective PP/WM opportunities

14. Implement the PP/WM and water conservation programs through employee training, awareness, and incentives.

15. Perform periodic assessment of the PP/WM and water conservation accomplishments by key management personnel, the coordinator and independent experts.

16. Show management commitment through the above actions and reinforce the policy through meetings and company actions.

17. Design and implement proper closure of the scrubber water, domestic wastewater, and vehicle washwater ponds as well as existing septic tank excavations

18. Design and install concrete septic tanks and a proper leach field to treat domestic wastewater and workshop wastes. A properly designed leach field will not impact groundwater.

19. Continue evaluating the use of sludge pond water for irrigation. High pH, chloride, and dissolved solids may have an adverse impact on crops and soil.

20. Design and install groundwater monitoring wells, as recommended, to determine if underlying aquifers are contaminated.

21. Carefully review groundwater monitoring results. If the data over a period of two years indicate groundwater contamination, appropriate remedial actions will have to be undertaken.

22. Design and install an additional three scrubbers and associated water recycling system.

23. Evaluate, as and when appropriate, the installation of a wet grinding system with water recycling to minimize air pollution.

TABLES

43

TABLE 1: CURRENT DESIGN PRODUCTION CAPACITIES OF JORDAN PHOSPHATE ROCK MINES

Mine	Production (million tons/year)
Alhassa	3.5
Al-Abiad	2.5
Elshidiya	3.25 (as of 1995)
Total	9.25 (as of 1995)

TABLE 2: FRESH WATER BALANCE, AL-ABIAD MINE

Water In		Water Out	
Source	Rate, m^3/hr	Source	Rate, m^3/hr
Groundwater Wells	453	Thickener Underflow	387
Moisture with Ore	16	Scrubber Water	6
		Domestic Waste	8
		Vehicle Washwater	4
		Workshop Wastewater	3
		Dust Control	27
		Irrigation	4
		Moisture to Atmosphere	26
		Water with Rejects	2
		Product Moisture	2
Total	469		469

TABLE 3: THICKENER UNDERFLOW SLUDGE ANALYSIS

Parameter	Result
pH	8.3
Total Suspended Solids	75.632 mg/l
Fluorides	2.17 mg/l
Chlorides	494 mg/l
Phosphates (ortho)	4.4 mg/l
Density	1.051

* The sample was collected during the audit visit on August 16, 1994 at about 3.0 p.m.

TABLE 4: ANALYSIS OF SLIME POND CLEAR WATER USED FOR IRRIGATION[1]

Parameter	pH	TSS	TDS	Cl	F	NO_3	PO_4
Unit	SU	mg/l	mg/l	mg/l	mg/l	mg/l	mg/l
Result	8.5	18	2080	681.8	1.84	13.6	0.41
Standards[5]	6.5-8.4	100	2000[2]	350[3]	(1.5)[4]	30	

Sampling date 8/4/1994

Allowable limits of wastewater reuse determine the degree of restriction

Method of irrigation is determined by wastewater quality being used

The standard is for groundwater recharge. No standard exists for irrigation

Jordanian Standard 202

Analyses are performed after sample filtration

TABLE 5: AIR EMISSION SOURCES OF PHOSPHATE ROCK MINING AND BENEFICIATION[a]

	Dragline		Drying	Silo Storage	Loading	Total
	Stripping of Overburden	Mining of the Ore				
Emission factor, g/kg	0.025	0.0004	0.071	0.105	0.161	0.362
Control devices:						
Existing Types	None	None	Cyclone and wet scrubbers	Scrubbers	Enclosure	b
Effectiveness, %	None	None	>95	>95	c	b
Future Trends	None	None	None	None	Exhaust fugitive dust to control device	b

[a]Numbers were derived from six sample runs made at one site. See Appendix H.
[b]Not applicable.
[c]Not available.

FIGURES

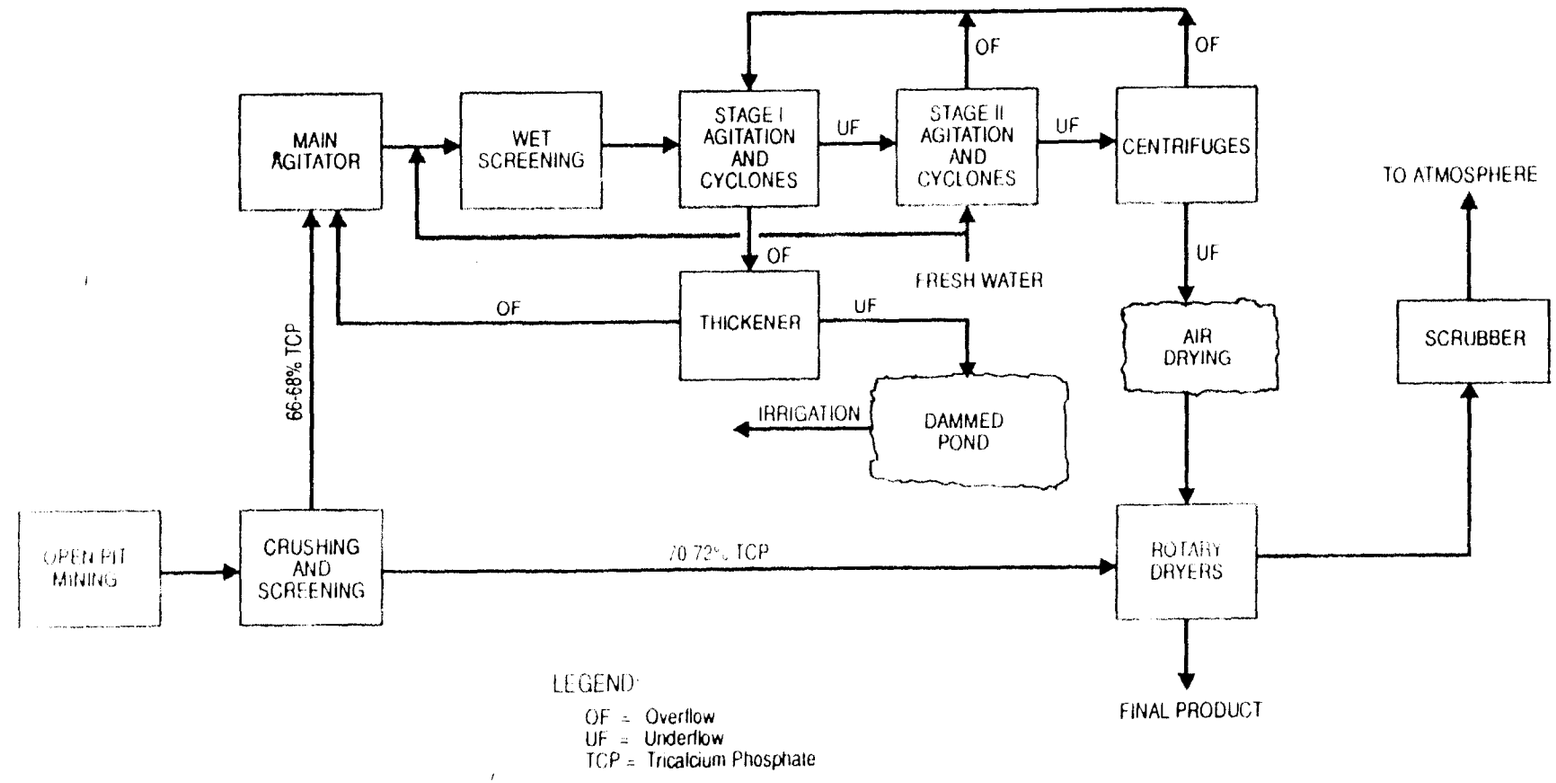

Figure 1

PHOSPHATE BENEFICIATION PROCESS BLOCK FLOW DIAGRAM

AL-ABIAD MINE

JORDAN PHOSPHATE MINES CO. LTD.
Amman, Jordan

HARZA *Consulting Engineers and Scientists*

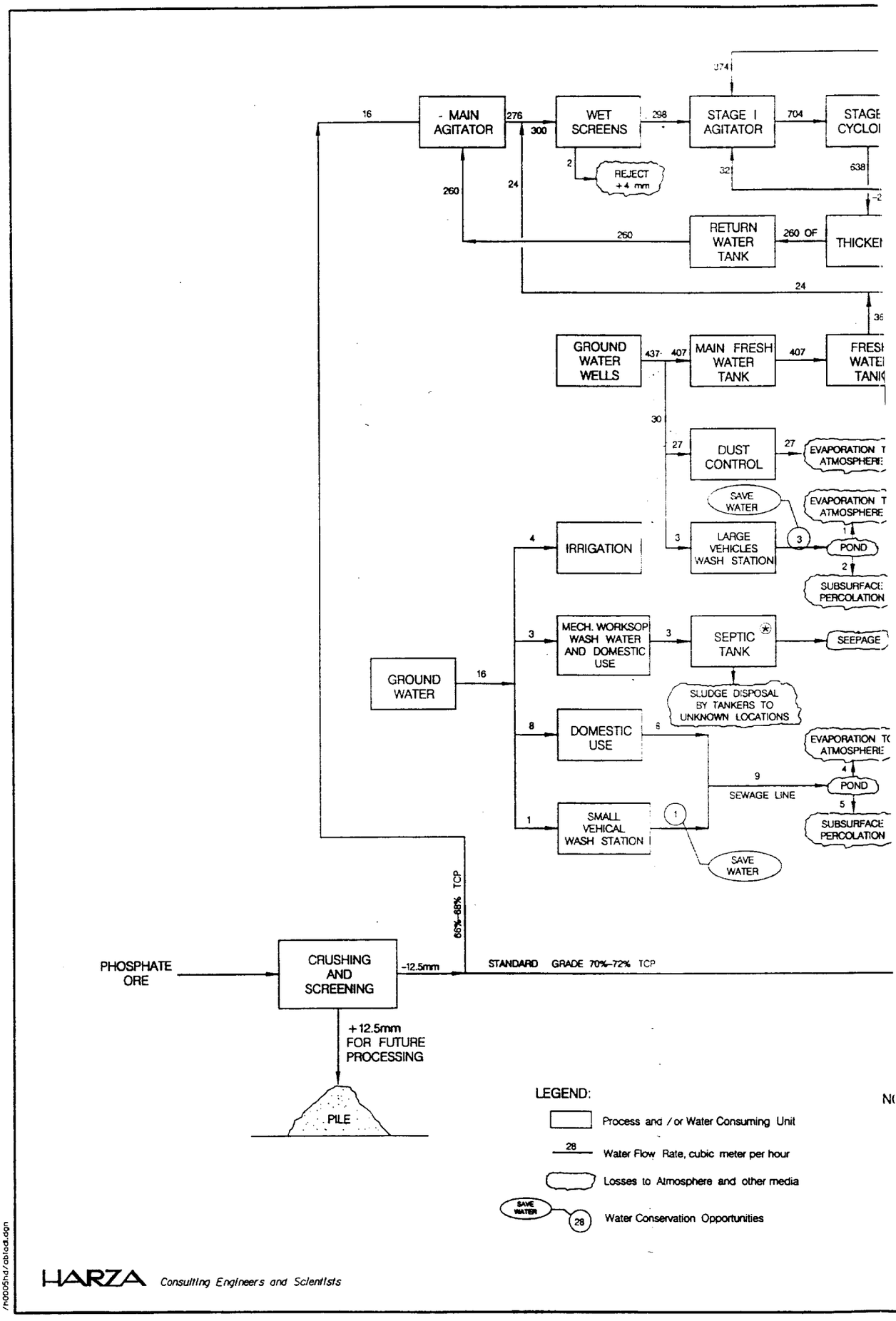
MAIN AGITATOR
WET SCREENS
STAGE I AGITATOR
STAGE CYCLOI
REJECT +4 mm
RETURN WATER TANK
THICKEI
GROUND WATER WELLS
MAIN FRESH WATER TANK
FRESH WATEI TANK
DUST CONTROL
EVAPORATION T ATMOSPHERE
SAVE WATER
LARGE VEHICLES WASH STATION
POND
SUBSURFACE PERCOLATION
IRRIGATION
MECH. WORKSOP WASH WATER AND DOMESTIC USE
SEPTIC TANK
SEEPAGE
GROUND WATER
SLUDGE DISPOSAL BY TANKERS TO UNKNOWN LOCATIONS
DOMESTIC USE
SEWAGE LINE
SMALL VEHICAL WASH STATION
PHOSPHATE ORE
CRUSHING AND SCREENING
-12.5mm
STANDARD GRADE 70%-72% TCP
66%-68% TCP
+12.5mm FOR FUTURE PROCESSING
PILE
LEGEND:
Process and / or Water Consuming Unit
Water Flow Rate, cubic meter per hour
Losses to Atmosphere and other media
Water Conservation Opportunities
HARZA Consulting Engineers and Scientists

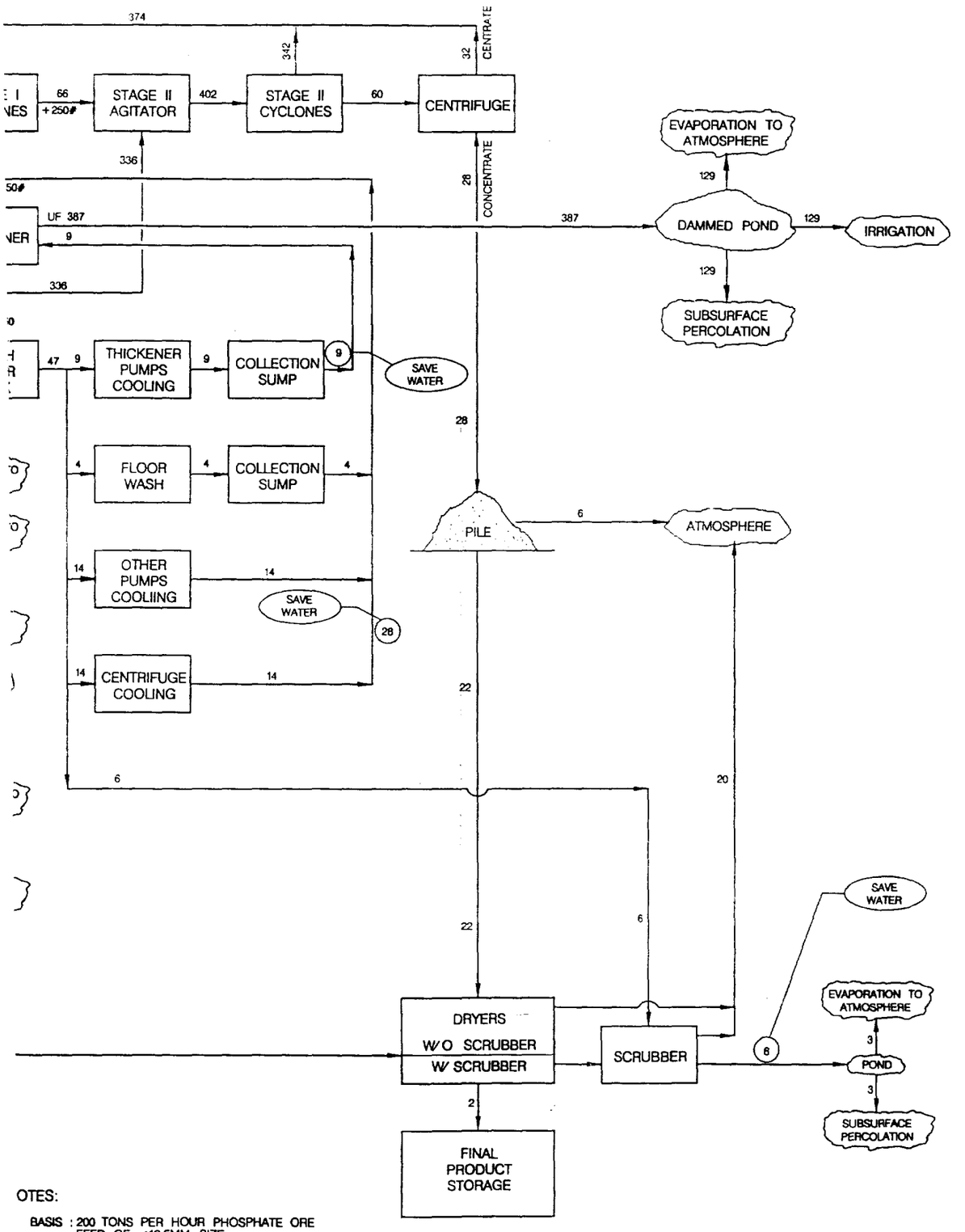

OTES:

BASIS : 200 TONS PER HOUR PHOSPHATE ORE FEED OF <12.5MM SIZE

TCP : TRICALCIUM PHOSPHATE

★ : SOME FLOWS ARE MONITORED AND SOME ARE ESTIMATED

⊛ : THIS IS NOT A MANUFACTURED SEPTIC TANK IT IS AN UNLINED EXCAVATION

Figure 2

FRESH WATER FLOW BALANCE
Al–Abiad Mine

JORDAN PHOSPHATE MINES CO. LTD.
Amman, Jordan

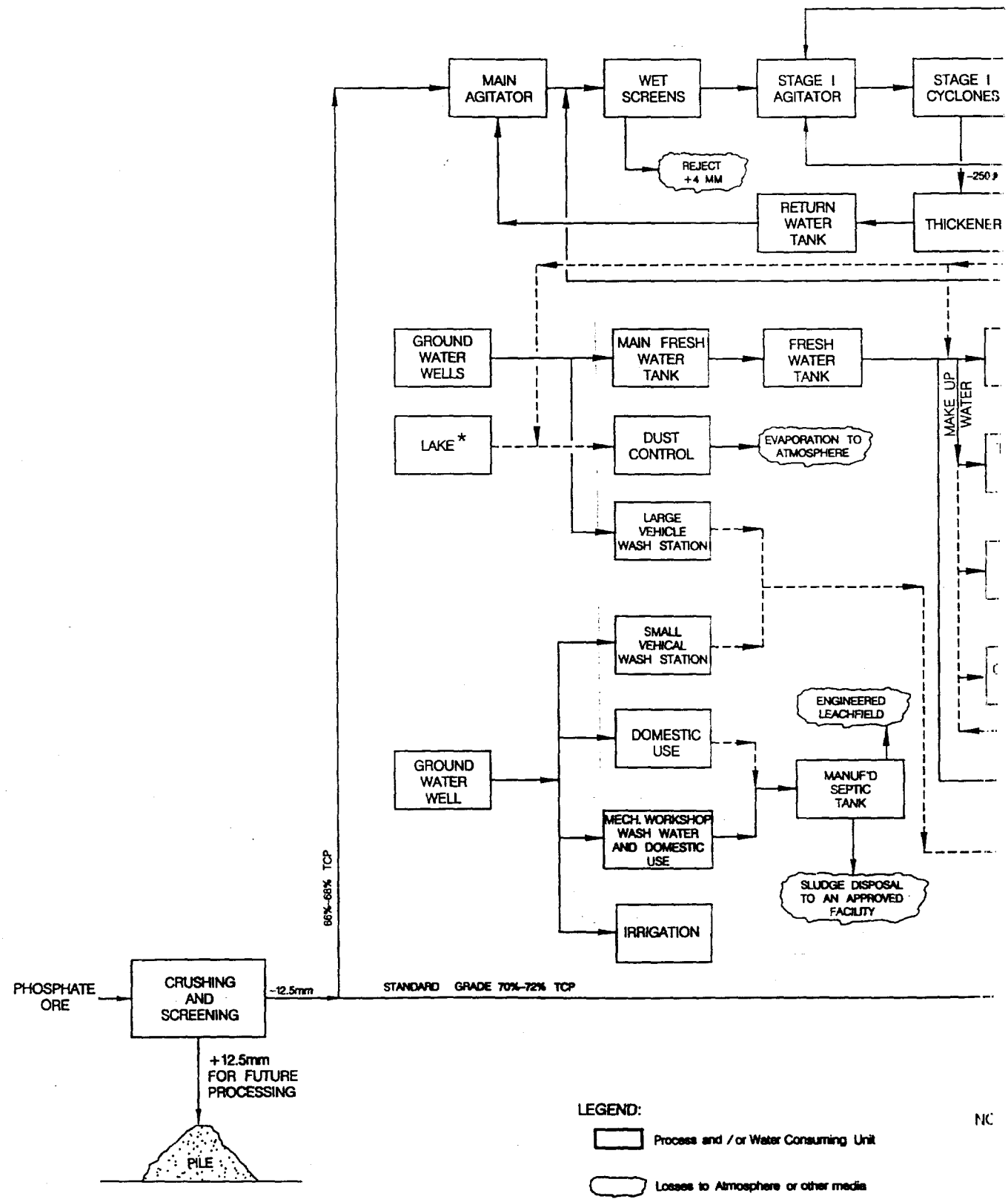
MAIN AGITATOR
WET SCREENS
STAGE I AGITATOR
STAGE I CYCLONES
REJECT +4 MM
-250
RETURN WATER TANK
THICKENER
GROUND WATER WELLS
MAIN FRESH WATER TANK
FRESH WATER TANK
MAKE UP WATER
LAKE*
DUST CONTROL
EVAPORATION TO ATMOSPHERE
LARGE VEHICLE WASH STATION
SMALL VEHICAL WASH STATION
ENGINEERED LEACHFIELD
DOMESTIC USE
GROUND WATER WELL
MANUF'D SEPTIC TANK
MECH. WORKSHOP WASH WATER AND DOMESTIC USE
SLUDGE DISPOSAL TO AN APPROVED FACILITY
IRRIGATION
66%-68% TCP
PHOSPHATE ORE
CRUSHING AND SCREENING
-12.5mm
STANDARD GRADE 70%-72% TCP
+12.5mm FOR FUTURE PROCESSING
PILE
LEGEND:
Process and / or Water Consuming Unit
Losses to Atmosphere or other media
Proposed Water Recycle or Reuse Line
HARZA Consulting Engineers and Scientists

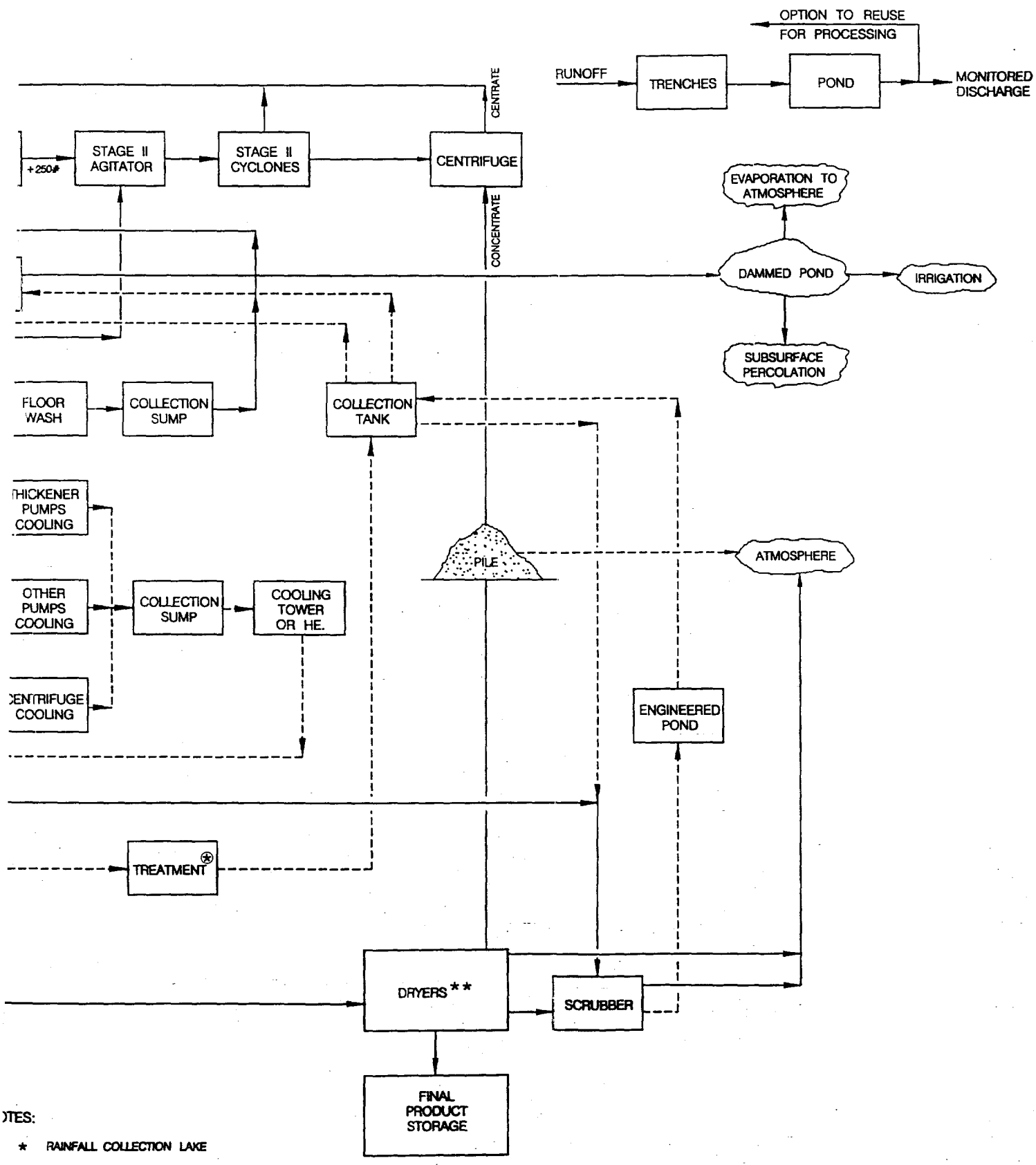

OTES:

* RAINFALL COLLECTION LAKE

⊛ : SEE FIGURE 4

** : IT IS RECOMMENDED THAT ALL FOUR DRYERS SHOULD BE FITTED WITH SCRUBBER UNITS

-SEVERAL WATER RECYCLE OPTIONS ARE PRESENTED SPECIFIC OPTIONS WILL BE DEFINED UPON FURTHER STUDY.

Figure 3

PROPOSED WATER RECYCLE AND REUSE
Al-Abiad Mine

JORDAN PHOSPHATE MINES CO. LTD.
Amman, Jordan

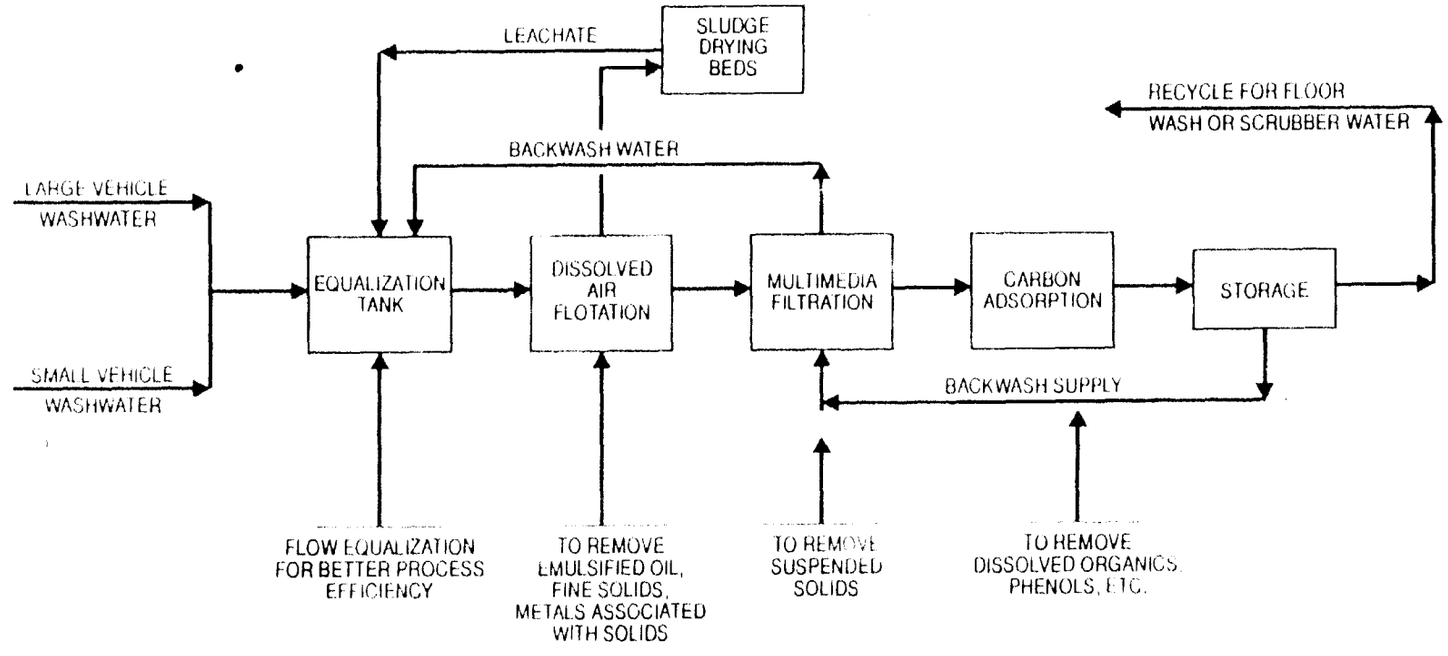

Figure 4

SUGGESTED TREATMENT FOR VEHICLE WASHWATER

AL-ABIAD MINE

JORDAN PHOSPHATE MINES CO. LTD.
Amman, Jordan

HARZA *Consulting Engineers and Scientists*

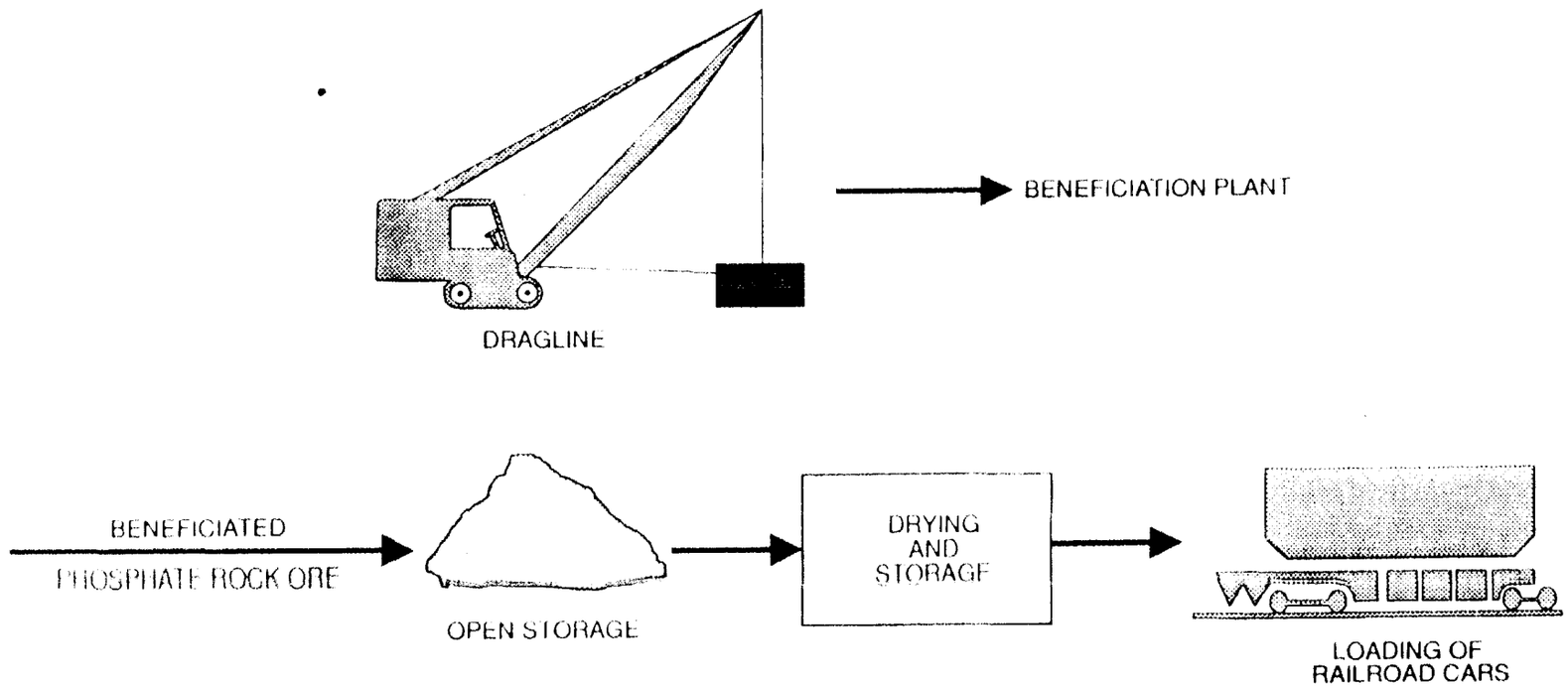

Figure 5

SELECTED PHOSPHATE ROCK EMISSION SOURCES

AL-ABIAD MINE

JORDAN PHOSPHATE MINES CO. LTD.
Amman, Jordan

HARZA *Consulting Engineers and Scientists*

APPENDICES

APPENDIX A

AUDIT QUESTIONNAIRE

WQICP WASTE MINIMIZATION AUDIT

Facility Name: Al-Abiad Mine Auditor/Firm: HARZA-RSS

Date: 3/16/1994

ATTACHMENT A

AUDIT QUESTIONAIRE

SITE DESCRIPTION

Facility Name: Al-Abiad Mine - Jordan Phosphate Mines Co. Ltd

Area:

Address: Amman - Jordan. P.O. Box 30

Telephone: 962-6-660141/660147, 962-3-369115

Major Products: Phosphate

Production Rate: 170-190 tons of feed ore per hour, 60% recovery.

SIC Codes: 1475*

Major Sources of Wastewater Discharges:

1- Domestic wastewater and small vehicles wash water.
2- Mechanical workshop wash water and domestic wastewater.
3- Large vehicle washwater 4- Scrubber wastewater 5- Thickener underflow
6- Runoff water

Major Processes:

Crushing and screening, wet screening, countercurrent washing and cyclonning, thickening, centrifuging and drying

Facility/Equipment Age:

Sixteen years

* According to American Industrial Standard Classification.

WQICP WASTE MINIMIZATION AUDIT

Facility Name: Al-Abiad Mine Auditor/Firm: HARZA-RSS

Date: 8/16/1994

PROCESS INFORMATION

Operation Type: ✓ Continuous -- Discrete -- Batch or Semi-Batch -- Other_____

Document	Complete? (Y/N)	Current? (Y/N)	Document Number
Process Flow Diagram	Y*	Y*	
Material/Energy Balance			
Design	Y*	Y*	
Operating	-	-	
Flow/Amount Measurements	-	-	
Stream			
Analyses/Assays			
Stream			
Chloride analyses in Slime stream	Y	Y	
Plant Layout/Flow Diagrams	Y	Y	
Process Description	Y	Y	
Operating Manuals	Y*	Y*	
Equipment List/Age	-	-	
Equipment Specifications	Y*	Y*	
Piping & Instrument Diagrams	Y*	Y*	
Plot and Elevation Plan(s)	-	-	
Environmental Audit Report	N	N	
Permit/Permit applications	N.A	N.A	
Raw Material Inventory Records	Y*	Y*	
Product Inventory Records	Y*	Y*	
Management method practiced for each wastewater stream	N	N	
Wastewater treatment facilities	N	N	
Waste management practice	N	N	
Ancillary facilities			
Annual cost for management of the wastewater discharge	N	N	
Photographic records	N	N	
-			

N.A : Not Applicable

Y* : The company has it, but was not made available to the audit team.

- : Not Known.

WQICP WASTE MINIMIZATION AUDIT

Facility Name: Al-Abiad Mine Auditor/Firm: SARZA-RSS

Date: 5/16/1994

INPUT MATERIALS SUMMARY*

Material	DESCRIPTION		
	Stream No.	Stream No.	Stream No.
Name			
Source/Supplier			
Component of Concern			
Annual Consumption Rate			
Overall			
Component(s) of Concern			
Purchase Price, $ per			
Overall Annual Cost			
Delivery Mode[2]			
Shipping Container Size & Type[3]			
Storage Mode[4]			
Transfer Mode[5]			
Empty Container Disposal/Management			
Shelf Life			
Supplier Would			
- accept expired material (Y/N)			
- accept shipping containers (Y/N)			
Acceptable Substitute(s), if any			
Alternate Supplier(s)			
Product Inventory Records			

1. Stream number, if applicable, should correspond to those used on process flow diagram
2. e.g., pipeline, tank truck, etc.
3. e.g., drum, paper bag, tank, etc.
4. e.g., outdoor, warehouse, underground, aboveground, etc.
5. e.g., pump, forklift, conveyor, etc.
6. e.g., crush and dump, clean and recycle, return to supplier, etc.

* The main input material is the phosphate ore. Dryers are Diesel fired but no further information is available

WQICP WASTE MINIMIZATION AUDIT

Facility Name: Al-Abiad Mine Auditor's Firm: HARZA-RSS

Date: 8/16/1994

INDIVIDUAL WASTE STREAM CHARACTERIZATION

(Page 1 of 4)

1. Waste Stream Name ID: Thickener underflow Stream ID: _____

2. Waste Characterization (attach additional sheets with composition data, as necessary)

   Type: Liquid Solid Mixed phase: Slurry

   Density kg/M³ 1150-1160 High Heating Value Btu/lb: _____
   pH _____ Flash Point _____ % Water: ≈ 37.6 %

3. Waste Disposal Pathway:

   Air emission ✓ Wastewater Solid Waste: Slurry

4. Generation:
   - continuous
   - ✓ discrete
     discharge triggered by: chemical analysis _____
     ✓ other (describe): Density

   Type: periodic _____ (specify) length of period _____

   Generation Rate:
   Annual 3157920 m³ kg per year
   Maximum _____ kg per _____
   Average 387 m³ kg per hr.
   Frequency _____ batches per _____
   Batch Size _____ average _____ range

WQICP WASTE MINIMIZATION AUDIT

Facility Name: Al- Abiad Mine Auditor/Firm: HARZA-RSS

Date: 3/16/1994

INDIVIDUAL WASTE STREAM CHARACTERIZATION

(page 2 of 4)

a. Waste Origins/Sources

Fill out this worksheet to identify the origin of the waste. If the waste is a mixture of waste streams, fill out a sheet for each of the individual waste streams.

Is the waste mixed with other wastes? Yes ✓ No

Describe how the waste is generated:

The undesired fine materials are separated in the thickener underflow.

Examples: Formulation and removal of [illegible] components [illegible] material of [illegible] waste [illegible] Impurities in [illegible] Expired material, spoiled batch and production run spill or leak cleanup. Incorporated into, contaminated sheet waste

WQICP WASTE MINIMIZATION AUDIT

Facility Name: Al-Abiad Mine Auditor/Firm: HARZA-RSS

Date: 8/16/1994

INDIVIDUAL WASTE STREAM CHARACTERIZATION

(page 3 of 4)

Waste Stream: Thickener underflow (slime)

Development Period

Leaving Site in: -- bulk

-- 55 gal drum

✓ other (describe) discharged into an open pond.

Disposal Frequency: intermittent

Applicable Standards/Reqs: Jordanian Standard 202

Treatment: ✓ [illegible]

[illegible]

[illegible]

[illegible]

✓ other (describe) One farmer pumps the clear water for irrigation.

Reclaimed material returned to site?

-- Yes -- No -- used by others

residue yield

residue disposal

Treatment: -- biological

[illegible]

pH adjustment No treatment is

-- precipitation performed

other (describe)

Final Disposition: ✓ dump Discharged to an open pond

-- pond

--- other (describe)

INDIVIDUAL WASTE STREAM CHARACTERIZATION

(page 4 of 4)

WQICP WASTE MINIMIZATION AUDIT

Facility Name: Al-Abiad Mine Auditor/Firm: HARZA - RSS

Date: 3/16/1994

Worksheet 11. A Product or Part

Cost Element	Unit Price JD per	Reference/Source
Waste Storage & Handling		
Pretreatment		
Container		
Transportation Fee		
Disposal Fee		
Taxes		
Total disposal cost		

Not Applicable.

WQICP WASTE MINIMIZATION AUDIT

Facility Name: Al-Abiad Mine Auditor/Firm: HARZA/RSS

Date: 5/16/1994

WASTE STREAM INFORMATION

(one form for each stream)

Stream ID: _____

1. Stream Name: Thickener underflow (slime)
   (wastewater, waste oil, still bottoms, etc.)

2. Discharge Identification: discharged from the three thickeners.
   (Enter process or equipment from which stream is discharged)

3. Stream flow rate:

   Continuous Flow _____ Gal/min
   Intermittent Flow _____ Gal/min
   Average Flow 387 m³/hr.

4. Is stream continuous or intermittent? The Stream is intermittent.

5. Which of the following is the reason for the waste?

   a. Process _____ (Reduction of raw material, product quality, process conditions)

   Process requirements to increase the percentage of TCP in the final product.

   b. Engineering design (capacity, pressure, temperature limitations, equipment reliability)

   c. Operations - (operating rates, rate of addition, etc.) Describe

   d. Maintenance - (leaks, spills, corrosion, etc.) Describe

6. Are the components of the waste stream a raw material (RM), product (P), useful byproduct (UPB), nonuseful byproduct (NBP), solvent (S), catalyst (C), or an impurity (I) in the raw material?

   (Attach analysis results if possible)

   List all relevant figures and calculations.

WASTE MINIMIZATION AUDIT

Facility Name: Al-Abiad Mine Audit Team: HARZA-RSS
Date: 5/16/1994

Component Name	Aux. Matrix	Toxic Org. VOM	[illegible]	SVP	SVP	[illegible]	[illegible]	[illegible]

Waste Stream Data: Flow [illegible] pH [illegible] TSS [illegible] Other: See Appendix C

8. Current disposal of waste stream: The stream is disposed of to a dammed pond.

Current effluent criteria and disposal cost:

Jordanian Standard 202

10. Permits required for waste stream disposal:

Not Applicable

11. Current cost of disposal and/or treatment for this waste stream:

Not Applicable

12. If stream is currently being treated: No treatment is performed.

a. Current treatment parameters (chemical consumption, treatment costs, etc.):

b. Existing treatment equipment (identify size and type of equipment):

WQICP WASTE MINIMIZATION AUDIT

Facility Name: Al-Abiad Mine Auditor Firm: HARZA - RSS

Date: 3/16/1994

Other pertinent information: None

WQICP WASTE MINIMIZATION AUDIT

Facility Name: Al Abiad Mine Auditor/Firm: HARZA-RSS

Date: 8/16/1994

Return water to main agitate. ← Recycle (Overflow) Product → X

Inlet**	Process/Equipment Name/Number
Component Name	
RM.	
S.	
I. <250 # material from Stage I Cyclones.	Thickener
C.	

Useful Byproducts → X

Waste Stream Thickener underflow Stream

	Name	mg/L
RM		
C		
S		
I		
UBP		
NBP		
P		

where:

C = Catalyst RM = Raw material

I = Impurity in the raw material S = Solvent

NBP = Non-useful by product UBP= Useful byproduct

P = Product

** If UBP, P, or NBP appears in the inlet/feed to a unit operation, then it was formed in the previous piece of equipment. Trace it back to the unit in which it was formed.

Figure 1

X : Non existing.

WQICP WASTE MINIMIZATION AUDIT

Facility Name: Al Abiad Mine Auditor Firm: HARZA - RSS

Date: 5/16/1994

INDIVIDUAL WASTE STREAM CHARACTERIZATION

(page 1 of 1)

1. Waste Stream Number: Scrubber Wastewater Stream No. _____

2. Waste Characterization (attach additional sheets with composition data, as necessary)

   [illegible] Solid [illegible] Mixed phase: Slurry

   [illegible] N.K [illegible] N.K

3. Waste leaves process as:

   [illegible] air emission [illegible] wastewater [illegible] solid waste Slurry

4. Frequency:

   [illegible] continuous

   ✓ discrete

   discharge triggered by [illegible] chemical analysis _____

   ✓ other (describe) Operation of the scrubber

   Type [illegible] periodic _____ [illegible] of period _____

   [illegible] sporadic

5. Generation rate:

   Annual 46,500 m^3 kg per year

   Maximum _____ kg per _____

   Average 6 m^3 ~~kg~~ per hr

   Frequency _____ batches per _____

   Batch size _____ average _____ range _____

N.K: Not Known.

WQICP WASTE MINIMIZATION AUDIT

Facility Name: Al-Abiad Mine Auditor/Firm: HARZA - RSS

Date: 5/16/1994

INDIVIDUAL WASTE STREAM CHARACTERIZATION

(page 2 of 4)

6. Waste Origins/Sources

Fill out this worksheet to identify the origin of the waste. If the waste is a mixture of waste streams, fill out a sheet for each of the individual waste streams.

Is the waste mixed with other wastes? Yes ✓ No

Describe how the waste is generated.

Scrubber is used to reduce particulate emissions from the dryers into the atmosphere, wastewater slurry is produced which contains fine materials

Examples: Formulation and [illegible] of [illegible] components [illegible] of [illegible] raw materials [illegible] equipment [illegible] raw materials [illegible] spill or leak cleanup, [illegible] [illegible] etc

WQECP WASTE MINIMIZATION AUDIT

Facility Name: Al-Abiad Mine Auditor Firm: HARZA-RSS

Date: 8/16/1994

INDIVIDUAL WASTE STREAM CHARACTERIZATION

(page 3 of 4)

Waste Stream: Scrubber wastewater

Generated Waste:

Storage Site in: -- bulk

-- 55 gal drum

✓ -- other (describe): Discharged to an open pond.

Disposal Frequency: Discrete

Applicable Criteria/Reqs: Jordanian standard 202

Tracking: ✓ [illegible]

-- other (describe)

Recycle: N.A

-- [illegible]

-- [illegible]

-- reclaimed

-- other (describe)

reclaimed material returned to other

-- Yes -- No -- used by others

residue yield

residue disposal

Treatment: -- biological

-- oxidation/reduction

-- pH adjustment

-- precipitation

-- other (describe)

No treatment is performed.

Final Disposal Loc.: ✓ Dump Discharged to an open pond.

-- pond

-- other (describe)

N.A : Not Applicable

INDIVIDUAL WASTE STREAM CHARACTERIZATION

(page 4 of 4)

70

WQICP WASTE MINIMIZATION AUDIT

Facility Name: Al Abiad Mine Auditor/Firm: HARZA-RSS

Date: 3/16/1994

Waste: N.A (Specify waste and form)

Cost Element	Unit Price JD per	Reference Source
Waste Storage & Handling		
Pretreatment		
Container		
Transportation Fee		
Disposal Fee		
Other		
Total Disposal Cost		

N.A : Not Applicable.

WQICP WASTE MINIMIZATION AUDIT

Facility Name: Al-Abiad Mine Auditor/Firm: HARZA- RSS

Date: 3/16/1994

WASTE STREAM INFORMATION

(one form for each stream)

Stream ID:

1. Stream Name: Scrubber wastewater
(wastewater, waste oil, still bottoms, etc.)

2. Discharge Identification: Scrubber.
(Enter process or equipment from which stream is discharged)

3. Stream Flow Rate:

Minimum Flow
Maximum Flow
Average Flow 6 m^3/hr

4. Is the stream intermittent? The stream is intermittent

If intermittent, indicate the number of times per day

5. Cost: ——, (Include capital, operating, maintenance costs)

Particulate emissions control

6. Equipment Capacity (design capacity, pressure, temperature limitations, etc.) for stream:

7. Operations - Operating rates (after 1st addition, etc.) Describe:

8. Maintenance - (leaks, spills, erosion, etc.)
Describe:

9. Are the components of the waste stream a raw material (RM), product (P), useful byproduct (UBP), nonuseful byproduct (NBP), solvent (S), catalyst (C), or an impurity (I) in the raw material?

(Attach analysis results if possible)

(Fill out attached Figure 1 for each waste stream)

MOTOR WASTE MINIMIZATION AUDIT

Facility Name: Al-Abiad Mine Auditor/Firm: HARZA - RSS

Date: 3/16/1994

Component Name	Use (mg/l)	Check One: RM	P	DBP	NBP			

Waste Stream Characteristics N.K pH: TSS: TDS:

Volume: Frequency: Odor: Color: Other:

Current Disposal of the Stream: The Stream is disposed to an open pond.

Applicable Effluent Criteria and Disposal Limitations:

Jordanian Standard 202

Permits Required for the Waste Stream Disposition:

N.A

Current Cost of Disposal and/or Treatment for this Waste Stream:

N.A

If Stream is Currently Being Treated: No treatment is currently perfo

a. Current treatment parameters (chemical consumption, treatment conditions, etc.):

b. Existing treatment equipment (identify, size and type of equipment):

N.K: Not Known, no available analysis

N.A: Not Available

WQICP WASTE MINIMIZATION AUDIT

Facility Name: Al- Abiad Mine Auditor/Firm: HARZA-RSS

Date: 8/16/1994

Other pertinent information: None

WQICP WASTE MINIMIZATION AUDIT

Facility Name: Al-Abiad Mine Auditor/Firm: HARZA-RSS

Date: 8/10/1994

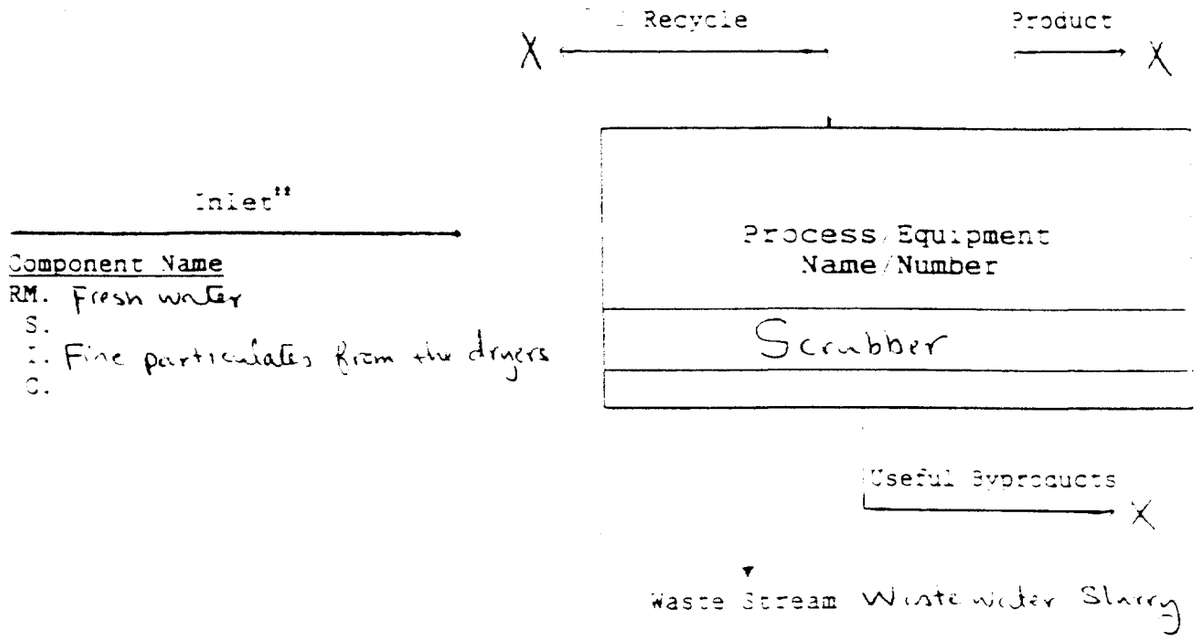

	Name	mg/L
RM		
C		
S		
I		
UBP		
NBP		
P		

where:

C = Catalyst RM = Raw material

I = Impurity in the raw material S = Solvent

NBP = Non-useful by product UBP = Useful byproduct

P = Product

** If UBP, P, or NBP appears in the inlet/feed to a unit operation, then it was formed in the previous piece of equipment. Trace it back to the unit in which it was formed.

Figure 1

X : Non existing

WQICP WASTE MINIMIZATION AUDIT

Facility Name: Al-Abiad Mine Auditor/Firm: HARZA-RSS

Date: 8/16/1994

INDIVIDUAL WASTE STREAM CHARACTERIZATION

(page 1 of 4)

1. Waste Stream Name/ID: Mechanical workshop washwater and domestic wastewater Stream No. _____

2. Waste Characterization (attach additional sheets with composition data, as necessary): N.K

-- Gas -- Liquid -- Solid -- Mixed phase

Density kg/M³ _____ High Heating Value Cal/Kg _____

pH _____ Flash Point _____ % Water _____

3. Waste leaves facility as:

-- air emission ✓ wastewater -- solid waste

4. Frequency:

✓ continuous

-- discrete

discharge triggered by -- chemical analysis _____

-- other (describe) _____

Type -- periodic _____ length of period _____

-- sporadic

5. Generation Rate:

Annual 24480 m³ per year

Maximum _____ kg per _____

Average 3 m³ per hr

Frequency _____ batches per _____

Batch Size _____ average _____ range

N.K : Not Known. No available analysis.

WQICP WASTE MINIMIZATION AUDIT

Facility Name: Al-Abiad Mine Auditor/Firm: HARZA - RSS

Date: 8/16/1994

INDIVIDUAL WASTE STREAM CHARACTERIZATION

(page 2 of 4)

6. Waste Origins/Sources

Fill out this worksheet to identify the origin of the waste. If the waste is a mixture of waste streams, fill out a sheet for each of the individual waste streams

Is the waste mixed with other wastes? Yes ✓ No

Describe how the waste is generated

This wastewater includes mechanical workshop wash water and the workshop employees sanitary wastewater.

Example: [illegible]

WQICP WASTE MINIMIZATION AUDIT

Facility Name: Al-Abiad Mine Auditor/Firm: HARZA-RSS

Date: 3/16/1994

INDIVIDUAL WASTE STREAM CHARACTERIZATION

(page 3 of 4)

Mechanical workshop washwater and domestic wastewater.

Transport Method

Bulk Container

- bulk
- 55 gal drum
- ✓ other (describe) _____

Disposal Frequency: Continuous

Application of Waste Reps

Product

- ✓ [illegible]
- [illegible]

Byproduct: N.A

- [illegible]
- [illegible]
- [illegible]
- other (describe) _____

reclaimed material returned to site?

-- Yes --- No - used by others

residue yield _____

residue disposal _____

Treatment

- [illegible]
- [illegible]
- pH adjustment
- precipitation
- other (describe) _____

Final Disposition

- ✓ Dump Discharged into unlined excavation (septic tank
- pond
- other (describe) _____

N.A: Not Applicable

INDIVIDUAL WASTE STREAM CHARACTERIZATION

(page 4 of 4)

WQTCP WASTE MINIMIZATION AUDIT

Facility Name: Al-Abind Mine Auditor/Firm: HARZA-RSS

Date: 8/16/1994

Waste: N.A

Cost Element	Unit Price JD per	Reference Source
Waste Storage & Handling		
Pretreatment		
Container		
Transportation Fee		
Disposal Fee		
Other		
Total Disposal Cost		

Not Applicable.

WQICP WASTE MINIMIZATION AUDIT

Facility Name: Al-Abiad Mine Auditor, Firm: HARZA-RSS

Date: 3/16/1994

WASTE STREAM INFORMATION

(one form for each stream)

Stream ID:

1. Stream Name: Mechanical workshop washwater and domestic wastewater.
(wastewater, waste oil, still bottoms, etc.)

2. Discharge Identification: Mechanical workshop.
(Enter process or equipment from which stream is discharged)

3. Stream Quantity:

Maximum Flow
Minimum Flow
Average Flow 3 m^3/hr

4. Discharge Frequency: Continuous.

5. What is the volume of the waste? N.A

6. Is the waste stream a relatively constant or periodic discharge?

7. Equipment Design Capacity, Pressure, Temperature Limitations (if applicable):

8. Operations - Operating rates, start up addition, etc.) Describe:

9. Maintenance - Leaks, spills, cleaning, etc.) Describe:

10. Are the components of the waste stream a raw material (RM), product (P), useful byproduct (UBP), nonuseful byproduct (NBP), solvent (S), catalyst (C), or an impurity (I) in the raw material?

(Attach analysis results if possible)

(Fill out attached Figure 1 for each waste stream)

MQICP WASTE MINIMIZATION AUDIT

Facility Name: Al-Abiad Mine Auditor Firm: HARZA-RSS

Date: 3/16/1994

Component Name	Use Point	Chg B Chg						
		RM	%	MBP	MBP	%		

N.K

Waste Stream Characteristics (pH, Flow, Other)

9. Current disposition of this stream: This stream is discharged into unlined excavation (Septic tanic)

10. Current effluent criteria and disposal limitations:

11. Permits relevant to the waste stream disposition:

N.A.

12. Current cost of disposal and/or treatment for this waste stream:

N.A.

13. If stream is currently being treated, list: No treatment is done for this strea

a. Current treatment parameters (chemical consumption, treatment conditions, etc.):

b. Existing treatment equipment (identity, size and type of equipment):

N.K : Not Known No available analysis

N.A : Not Available

WQICP WASTE MINIMIZATION AUDIT

Facility Name: Al-Abiad Mine Auditor's Firm: HARZA-RSS

Date: 3/16/1994

Other pertinent information: None

WQICP WASTE MINIMIZATION AUDIT

Facility Name: Al-Abiad Mine Auditor/Firm: HARZA-KSS

Date: 5/16/1994

INDIVIDUAL WASTE STREAM CHARACTERIZATION

(page 1 of 4)

1. Waste Stream Name: Large vehicles washwater

2. Waste Characterization (attach additional sheets with composition data, as necessary)

[illegible]

3. Waste Source is Related to

[illegible] ✓ wastewater [illegible]

4. Occurrence:

[illegible]

✓ discrete

discharge triggered by [illegible] ✓ chemical analysis [illegible] other (describe) [illegible]

Type [illegible] Month of period [illegible]

5. Generation Rate:

Annual 24480 m^3 = [illegible]

Monthly [illegible]

Weekly 3 m^3 [illegible] hr

Frequency [illegible] Duration [illegible]

Batch size [illegible] Storage [illegible] Stage

WQICP WASTE MINIMIZATION AUDIT

Facility Name: Al-Abiad Mine Auditor/Firm: HARZA-RSS

Date: 8/16/1994

INDIVIDUAL WASTE STREAM CHARACTERIZATION

(page 2 of 4)

4. Waste Origins/Sources

Fill out this worksheet to identify the origin of the waste. If the waste is a mixture of waste streams, fill out a sheet for each of the individual waste streams.

Is the waste mixed with other wastes? Yes ✓ No

Describe how the waste is generated

This stream is generated by the large vehicle wash station

Examples	Information that includes: Raw material input, equipment cleaning, equipment inspection, equipment maintenance, equipment failure, spent batch and production run, spill or leak cleanup, evaporative loss, operating losses, etc.	Specific information of the specified input material, equipment, etc.

WQICP WASTE MINIMIZATION AUDIT

Facility Name: Al-Abiad Mine Auditor's Name: HARZA-RSS

Date: 8/16/1994

INDIVIDUAL WASTE STREAM CHARACTERIZATION

(page 3 of 4)

Large vehicles washwater

Waste Data:

Waste Size: -- bulk
--- 55 gal drum
✓ other (describe)

Disposal Frequency: Intermittent

Applicable Standards Regs:

Treatment: ✓ none
other (describe)

N.A

air
chemical
reduction
--- other (describe)

reclaimed material returned to site?

--- Yes -- No --- used by others

residue yield
residue disposal

Treatment: --- biological
oxidation reduction
-- pH adjustment
-- precipitation
-- other (describe)

No treatment is performed for this stream.

Final Disposition: ✓ Dump
--- pond
--- other (describe)

Discharged to an open pond.

N.A: Not Applicable

INDIVIDUAL WASTE STREAM CHARACTERIZATION

(page 4 of 4)

WQTCP WASTE MINIMIZATION AUDIT

Facility Name: Al-Abiad Mine Auditor/Firm: HARZA-RSS

Date: 8/6/1994

Cost Level N.A (quarter and year)

Cost Element	Unit Price JD per	Reference/Source
Onsite Storage & Handling		
Pretreatment		
Container		
Transportation Fee		
Disposal Fee		
Other		
Total disposal Cost		

N.A: Not Applicable

WQICP WASTE MINIMIZATION AUDIT

Facility Name: Al-Abiad Mine Auditor/Firm: [illegible]

Date: [illegible] 1994

WASTE STREAM INFORMATION

(One form for each stream)

Stream ID:

1. Stream Name: Large vehicles washwater

2. Discharge Identification: Large vehicles washwater

3. [illegible] 3 m³/h

4. [illegible]

5. [illegible]

washwater of large vehicles

6. [illegible]

7. [illegible]

8. [illegible]

WQICP WASTE MINIMIZATION AUDIT

Facility Name: Al-Abiad Mine Audit Team Name: HARZA-RSS

Date: 3/16/1994

Component Name	Volume and Units	Waste Stream						
		AM	P	BOD	NBP	S		I

Waste Stream Characteristics: NK pH

Color: Turbidity: Odor: P-2 Other:

a. Current disposal of the stream

This stream is discharged to an open pond

b. Current effluent criteria and disposal regulations

Jordanian Standard 202

10. Limits related to the waste stream disposition

N.A

11. Current cost of disposal and/or treatment for this waste stream:

N.A

12. If stream is currently being treated, list: No treatment is performed

a. Current treatment parameters (chemical consumption, treatment conditions, etc.):

b. Existing treatment equipment (identify, size and type of equipment):

N.K: Not Known. No available analysis

N.A: Not Applicable.

WQICP WASTE MINIMIZATION AUDIT

Facility Name: Ai-Abrasive Mine. Auditor's Firm: EMRZA-RSS

Date: 3/15/1994

Other pertinent information: None

WQICP WASTE MINIMIZATION AUDIT

Facility Name: Al-Abiad Mine Auditor/Firm: HARZA-RSS

Date: 8/16/1994

INDIVIDUAL WASTE STREAM CHARACTERIZATION

(page 1 of 4)

1. Waste Stream Name (or Stream No.): Domestic wastewater and Small vehicle washwater

2. Waste Characterization (attach additional sheets with composition data, as necessary):

   (a) ✓ Liquid Gas Mixed phase

   Density (kg/m³) _____ Heat Content (MJ/kg) _____

   pH _____ Flash Point _____ Viscosity _____

   Waste leaves facility as:

   Air emission ✓ Wastewater Solid waste

4. Occurrence:

   ✓ Continuous

   Discrete

   Discharge triggered by Chemical analysis _____

   Other (describe) _____

   Type Periodic _____ Length of period _____

   Sporadic

5. Volumes (liters/year):

   Annual 73,440 m³ per year

   Maximum _____ m³ per _____

   Average 9 m³ per hr

   Frequency _____ batches per _____

   Batch size _____ Average _____ Range _____

WQICP WASTE MINIMIZATION AUDIT

Facility Name: Al-Abiad Mine Auditor/Firm: HARZA-RSS

Date: 8/16/1994

INDIVIDUAL WASTE STREAM CHARACTERIZATION

(page 2 of 4)

1. Waste Origins Survey

Fill out this worksheet to identify the origin of the waste. If the waste is a mixture of waste streams, fill out a sheet for each of the individual waste streams.

Is the waste stream with [illegible] ✓ [illegible]

Describe how the waste is generated

Wastewater is generated from small vehicle car wash station and the sanitary wastewater generated by human activities in different parts of the Mine i.e administration building, stores, resturant, employees housing and beneficiation plant.

WQICP WASTE MINIMIZATION AUDIT

Facility Name: Al-Abiad Mine Audit Firm: HARZA - RSS

Date: 3/16/1994

INDIVIDUAL WASTE STREAM CHARACTERIZATION

(page 3 of 4)

Waste Stream: Domestic wastewater and small vehicle washwater.

Waste Stream #

Leaves Site in: --- bulk

-- 55-gal drum

✓ other (describe) Sewage pipe line

Disposal Frequency: Continuous.

Applicable Waste Codes

Transport: ✓ Waste Other

Recycle: N.A Other (describe)

Reclaimed material returned to site?

-- Yes --- No --- used by others

residue yield

residue disposal

Treatment: --- biological No treatment is

neutralization

pH adjustment performed.

precipitation

other (describe)

Final Disposition: ✓ Dump Disposed to an open pond.

--- pond

--- other (describe)

N.A: Not Applicable

INDIVIDUAL WASTE STREAM CHARACTERIZATION

(page 4 of 4)

WQICP WASTE MINIMIZATION AUDIT

Facility Name: Al-Abiad Mine Auditor Firm: HARZA-RSS

Date: 5/16/1994

Period N.A (Quarter and year)

Cost Element	Unit Price JD per	Reference/Source
Onsite Storage & Handling		
Pretreatment		
Container		
Transportation Fee		
Disposal Fee		
Other		
Total disposal Cost		

N.A: Not Applicable.

WQICP WASTE MINIMIZATION AUDIT

Facility Name: Al-Abiad Mine Auditor/Firm: HARZA-RSS

Date: 3/16/1994

WASTE STREAM INFORMATION

(one form for each stream)

Stream ID:

1. Stream Name: Domestic wastewater and small vehicle washwater.
(wastewater, waste oil, still bottoms, etc.)

2. Discharge Identification: Small vehicles wash station and human activit
(Enter process or equipment from which stream is discharged)

3. Stream flow point:

Average flow
Maximum flow
Minimum flow 9 m^3/hr

4. Is stream discharge continuous or intermittent? Continuous.

When is the majority of the volume of the waste?

5. Describe the waste stream (chemical composition, physical properties, etc.):

6. Operations - operating rates, rate of addition, etc.: Describe:

7. Maintenance - leaks, spills, cleanup, etc.:
Describe:

8. List the components of the waste stream: raw material (RM), product (P), useful byproduct (UBP), nonuseful byproduct (NBP), solvent (S), catalyst (C), or an impurity (I) in the raw material.

Attach analysis results if available.

List the hazardous waste codes.

WQICP WASTE MINIMIZATION AUDIT

Facility Name: Al-Abiad Mine

Auditor: HARZA-RSS

Date: 3/16/1994

Waste Stream Name	Waste Code	Quantity Generated

Waste Stream Characteristics: N.K

Waste Stream Description:

This wastewater stream is disposed of by sewage line into an open pond.

Reason for Generation:

None

Current Disposal and/or Treatment for this Waste Stream:

N.A

Current Cost of Disposal and/or Treatment for this Waste Stream:

N.A

Is this waste currently being treated? No.

Current Treatment Process (if treated, describe the treatment process):

Existing treatment equipment (identify, size and type of equipment):

N.K : Not Known. No available analysis

N.A : Not Applicable

WQICP WASTE MINIMIZATION AUDIT

Facility Name: Al-Abiad Mine Auditor Firm: HARZA-RSS

Date: 3/6-1994

Other pertinent information: None

WQICP WASTE MINIMIZATION AUDIT

Facility Name: Al-Abiad Mine Audited Firm: HARZA - RSS

Date: 8/16/1994

WASTE STREAM SUMMARY

Component of Waste Stream		Stream No.		Stream No.		Stream No.	
Waste Stream Name		Thickener Underflow		Scrubber water		Mech. WW & Dom Wastewater	
Source/Origin		Thickener		Scrubber		Mech. Workshop & human activities	
Annual Volume of Waste Stream (units: m^3)		3154920		46500		24480	
Overall							
Component Cost of Waste		N.K		N.K		N.K	
Unit Cost of Disposal		N.A		N.A		N.A	
Unit Cost of Disposal (US $/gal)							
Overall Unit Cost							
Method of Disposal		Discharged to an open pond		Discharged to an open pond		Discharged to septic tank	
Priority Ranking Criteria *	W	Rank (R)	W*R	Rank (R)	W*R	Rank (R)	W*R
Regulatory Compliance							
Treatment Disposal Cost							
Waste Quantity Generated							
Waste Hazard							
Safety Hazard							
Minimization Potential							
Potential Beneficial Reuse/Recovery							
Sum of Priority Ranking Scores							
Priority Rank							

1 Stream number, if applicable, should correspond to those used in process flow diagrams.

2 For example, sanitary dump, onsite recycle, dewatering, etc.

3 Rate each stream (R) in each category on a scale from 1 to 10.

OPTION DEVELOPMENT

Waste Stream No.

Waste Stream Name Facility or Process Unit Generating Waste

Operation Unit Affected

* Further investigation needed.

WQ-TP WASTE MINIMIZATION AUDIT

Facility Name: Al-Abied Mine | Audit Location: HARZA - RSS | Date: 8/16/1994

WASTE STREAM SUMMARY

Waste Stream Name		L. vehicle washwater Vehicle wash station		Domestic w.w + S.W. washwater Human activities + S.W. washwater			
Waste Stream Description							
Annual Generation Rate (units: m^3)		24450		73440			
[illegible]							
[illegible]		N.K		N.K			
[illegible]							
[illegible]		N.A		N.A			
[illegible]							
[illegible]							
Current Disposal		Discharge to an open pond		Discharge to an open pond			
Priority Pollutants Issues *	W	Est. Cost ($)	P.S.W.	Est. Cost ($)		Est. Cost ($)	K + W
Regulatory Compliance							
Treatment Disposal Cost							
Waste Quantity Generated							
Waste Hazard							
Safety Hazard							
Minimization Potential							
Potential Impact Reduction							
Annual Priority Pollutant Cost							
Priority Rank							

1 Stream number, if applicable, should correspond to the number on process flow diagram.
2 For example: solvent, lump, asbestos, [illegible]
3 Rate each stream (W) in each category on a scale [illegible]

OPTION DEVELOPMENT

Form 2

[illegible]

* Further investigation needed.

WQPCP WASTE MINIMIZATION AUDIT

Facility Name: Al-Abiad Mine Auditor/Firm: HARZA - KSS

Date: 8/16/1994

OPTION DEVELOPMENT *

Option Name: _____

Briefly describe the option _____

* Refer to the report, chapters 5, 6, 7, and 3

AQUEP WASTE MINIMIZATION AUDIT

Facility Name: Al-Abiad Mine Audit Firm: HARZA-KSS

Date: 8/16/1994

Meeting Participants _____

[illegible] Recommendations *	[illegible] Implementation

* Refer to the report, Chapters 5, 6, 7, and 8.

WQICP WASTE MINIMIZATION AUDIT

Facility Name: Al-Abiad Mine Auditor/Firm: HARZA-RSS

Date: 8/16/1994

OPTION EVALUATION BY
WEIGHTED SUM METHOD

SETTLABILITY TEST FOR THICKENER UNDERFLOW

During the audit visit of Al-Abiad Phosphate Mine on 8 16 1994, thickener underflow slurry samples were collected in four plastic containers of 1L capacity each. It was observed after a short time from collecting the sample that the slurry has an excellent settling characteristics.

On the second day, 8 17 1994, the contents of all the four containers were mixed together in a bucket. 1L sample was taken from this mixture for analysis at WAJ laboratory. The remaining sludge was stored in a 5L plastic container for further experimentation.

The settlability test was performed on 8 21 1994 utilizing four beakers of 1L capacity each. The sludge from the 5L plastic container was mixed in a bucket and a 500 mL sample was transferred to each one of the four beakers. Different doses of alum were added to each beaker as shown in the following table.

After alum addition, the mixture was vigerously mixed by a glass rod for two minutes and slowly for ten minutes. After one hour, the volume of settled sludge was measured.

The results presented in the table show that the settlability of the thickener underflow is excellent without any flocculant addition.

The addition of alum did not improve the settling characteristics, on the contrary reduced the settling velocity. This could be attributed to the relatively long time elapsed between collecting the sample and performing the test. Also, the solids characteristics might have changed due to the delay in performing the test.

Alum Added to 500 ml Sludge Sample (mg)	Volume of Sludge after one hour (ml)	Density of Sludge (g/ml)
0	175	1.115
5	180	1.125
50	186.7	1.115
100	193.4	1.125

APPENDIX B

ADDITIONAL QUESTIONNAIRE

PHOSPHATE MINING INDUSTRY

ADDITIONAL QUESTIONNAIRE

1. How much water is consumed by:

   - Floor Washing
   - Scrubber
   - Equipment Cooling

2. Are the above flows collected and recycled?

3. If not, how is the scrubber water disposed of:

   What type of treatment is used to treat it before discharge?

4. Besides counter current washing, where else is the return water used?

5. Are any flows overlooked?

6. How can we balance the total water flow?

7. Where do you get potable water from? How much?

8. Is there any treatment provided to the sanitary wastes?

9. How are the sanitary wastes disposed of?

10. How much sanitary waste is generated?

11. How much water is used for dust control?

12. What water conservation measures have been taken in the past?

13. What water conservation measures will be taken or are planned to be taken in the future?

14. What measures are planned to control dust from three dryers, conveyors, and crushing, grinding, and loading operations?

15. How many water flows are measured?

16. Are there any plans to monitor other flows?

17. How much water from the pond is used for irrigation

18. Are the equipment cooling systems once through?

19. What happens to the storm water?

20. Are there any water analytical reports for:

- Fresh Water
- Thickener Underflow
- Scrubber Effluent
- Pond Water for Irrigation

If available, can we have a copy?

21. Is the sludge Pond lined?

22. How much feed material was processed in 1993? What is the recovery?

23. Two figures were given for water consumption during 1993?

- Industrial Uses: 3,342,492 m^3
- Different parts of the Mine: 352,728 m^3

What does the last number include?

24. Do you have any analysis for phosphate ore?

25. How much water is consumed by the small vehicles wash station, the large vehicles wash station, and the mechanical workshop?

Where does the discharged wastewater go?

APPENDIX C

BACKUP INFORMATION PROVIDED BY THE INDUSTRY

بسم الله الرحمن الرحيم

شركة مناجم الفوسفات الأردنية المساهمة المحدودة

عمان - المملكة الأردنية الهاشمية

تلفون : ٦٦٠١٤١ — ٦٦٠١٤٧
تلكس : ٢١٢٢٣ ، ٢٢٤٧٥ فوسفات جو
ص.ب : ٣٠ عمان
تلغراف : فوسفات عمان
فاكسمي : ٦٨٢٢٩٠ — ٦٩١٢٩٠

الرقم : ٢٦/٢/٢٤٨٥/٩٩٤٨

التاريخ :

الموافق : ١٩٩٤/٨/١٢

المملكة الأردنية الهاشمية
وزارة المياه والري
الديوان العام
الرقم المتسلسل ٢١٨١٦
التاريخ ١٥/٨/١٩٩٤

عطوفة امين عام وزارة المياه والري المحترم

الموضوع : المعلومات المتعلقه بالاستبيان عن المياه في المناجم

اشارة الى كتاب غرفة صناعة عمان رقم ١٢/٤٤/ ١٢٠٠ تاريخ ١٩٩٤/٦/٥ بخصوص التعاون ما بين وكالة الاتحاد الدوليه الاميركيه ووزارة المياه والري وزيارة مندوبتكم المهندسه رانيا عبد الخالق بهدف جمع المعلومات لتحقيق اهداف البرنامج ،

يرجي التكرم بالعلم بما يلي :-

كميات المياه المستهلكه في منجم الحسا لعام ١٩٩٣ :-

للأغراض الصناعيه	٦٦٠ر ٠٢٥ر٤ م٣
لأغراض الشرب والاستعمال المنزلي	٣٩٠ر ١٠٨ر١ م٣
المجمـــــوع	٥٠ر٠ر١٣٠ر٥ م٣

كميات المياه المستهلكه في منجم الابيض لعام ١٩٩٣ :-

للأغراض الصناعيه	٤٩٢ر٣٤٢ر٣ م٣
لمختلف مرافق المنجم	٧٢٨ر٣٥٢ م٣
المجمـــــوع	٢٢٠ر٦٩٥ر٣ م٣

علماً ان المدينه السكنيه تقع قرب منجم الحسا .

المياه المستعمله لأغراض الصناعه تصنع خارج المنجم على شكـــل (SLIME) تحتوي على الطين والكلور بشكل رئيسي ويمكـن الحصول على اية معلومات اخرى متوفره خلال زيارة مندوبكم للمناجم بتاريخ ١٩٩٤/٨/١٦ .

شركة مناجم الفوسفات الاردنية
المساهمة المحدودة

المرفقات

١ - مخطط عام لمنجم الابيض مبيناً فيه مواقع الاجهزه والبرك وخط السلايم

٢ - مخطط عام مبيناً فيه مواقع آبار المياه التي تغذي المنجم .

٣ - مخطط لاجهزة رفع النسبه (Water & Material Balance - (Flow sheet

٤ - تحاليل الكلور في المياه العادمه .

وتفضلوا بقبول فائق الاحترام ...

المهندس سامح المدني
المدير العـــــام

[illegible]

[illegible]	[illegible]	[illegible]
[illegible]	[illegible]	[illegible]
[illegible]	[illegible]	[illegible]
[illegible]	[illegible]	[illegible]
[illegible]	[illegible]	[illegible]
[illegible]	[illegible]	[illegible]
[illegible]	[illegible]	[illegible]
[illegible]	[illegible]	[illegible]
[illegible]	[illegible]	[illegible]
[illegible]	[illegible]	[illegible]
[illegible]	[illegible]	[illegible]
[illegible]	[illegible]	[illegible]

[illegible]

[illegible]

English translation of the letter form Jordan Phosphate Mining Co. Ltd.
The Hashemite Kingdom of Jordan - Amman.

No. : DC/2/36/2485/9948
Date : 8/13/1994

To : Secretary General of Ministry of Water and Irrigation (MWI)

Subject: Information related to questionnaire about water usages in Mines.

Reference is made to Amman Chamber of Industry letter no. 12/44/1200 dated 6/5/1994 regarding cooperation between USAID and MWI, reference is also made to the visit of your representative, engineer Rania Abdul Khaleq to collect the information needed to fulfill the objectives of the program.

Please be informed about the following:

Consumed water quantities in Al-Hassa Mine during the year 1993:

Industrial uses:	4,025,660 m^3
Potable and domestic water :	1,108,390 m^3
Total:	5,134,050 m^3

Consumed water quantities in Al-Abiad Mine during the year 1993:

Industrial uses :	3,342,492 m^3
Different parts of the mine :	352,728 m^3
Total :	3,695,220 m^3

Also, kindly be informed that the employees housing is located near Al-Hassa Mine.

Water used for industrial purposes is pumped outside the Mine in the form of slime which mainly contains mud and chloride. Any further available

Samples were collected during a week form the mud and water pumped to the Wadi. These samples were analyzed for chloride and the results are presented in the following table:

	Conc. of Chloride (PPM)	
Date	**Mud water**	**Mud**
7/25/1994	380	810
7/26/1994	450	850
7/27/1994	400	800
7/30/1994	570	800
7/31/1994	570	1300
7/31/1994	580	1220
8/1/1994	570	1000
8/1/1994	550	820
8/2/1994	500	1300
8/2/1994	600	1550

information can be provided during the visit of your representatives to the Mine on 8/16/1994.

Best regards

Enclosures:

1. Al-Abiad Mine layout plot plan showing equipment, thickeners and slime lines.
2. Plan showing the groundwater wells locations supplying the Mine.
3. Water and material balance flow sheet.
4. Chloride analyses in wastewater.

Signed by
Eng. Sameh Al Madani
General Manager

FLOW Sheet Discription

Material and Water Balance

Fresh Water tank

LEGEND

S-	Solid percentage (%)
P-	Pulp (water + solid) (t/h)
W-	Water (t/h)
O-	Solid dry (t/h)
R.W.-	Return water (t/h)
F.W.-	Fresh water (t/h)
+4 mm	over size (Reject) screening
−4 mm	Under size screening
-250#	over flow (slime) (sycloning)
+250#	Under flow Concentvate (syc.)
#	Mesh

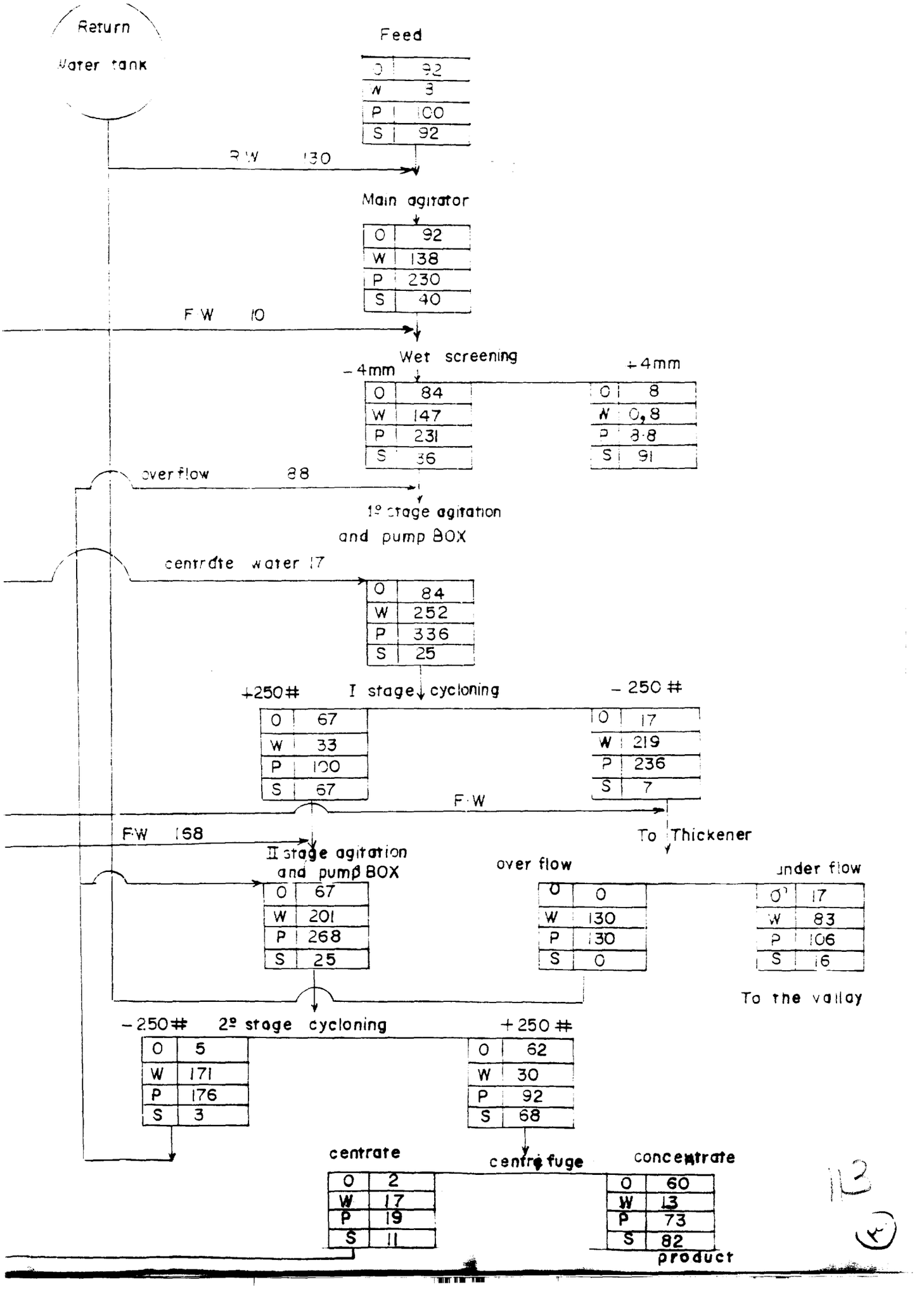
Return
Water tank
Feed
O 92
W 3
P 100
S 92
R W 130
Main agitator
O 92
W 138
P 230
S 40
F W 10
Wet screening
-4mm
O 84
W 147
P 231
S 36
+4mm
O 8
W 0,8
P 8·8
S 91
over flow 88
1º stage agitation
and pump BOX
centrate water 17
O 84
W 252
P 336
S 25
+250#
I stage cycloning
-250#
O 67
W 33
P 100
S 67
O 17
W 219
P 236
S 7
F·W
F·W 168
To Thickener
II stage agitation
and pump BOX
O 67
W 201
P 268
S 25
over flow
O 0
W 130
P 130
S 0
under flow
O 17
W 83
P 106
S 16
To the valley
-250#
2º stage cycloning
+250#
O 5
W 171
P 176
S 3
O 62
W 30
P 92
S 68
centrate
centrifuge
concentrate
O 2
W 17
P 19
S 11
O 60
W 13
P 73
S 82
product

113

(3)

L&E-A7

بسم الله الرحمن الرحيم

WATER AUTHORITY

LABORATORIES & ENVIRONMENT CONTROL

REPORT ON DRINKING WATER EXAMINATION

E.C mS/cm	T.D.S mg/l	PH	Ca^{++} Meq/l	Mg^{++} Meq/l	Na^{+} Meq/l	K^{+} Meq/l	Cl^{-} Meq/l	SO_4^{--} Meq/l	CO_3^{--} Meq/l	HCO_3^{-} Meq/l	NO_3 mg/l	TOC mg/l	R.Cl_2 mg/l	Turbidity NTU
0.840	558	7.43	5.57	2.23	2.6	0.09	2.76	1.46	0	5.02	0.93	0	-	
0.860	550	7.38	3.49	2.62	2.7	0.09	2.73	1.85	0	4.36	0.62	0	-	

Total Coliform	Fecal Coliform				Ref.	Lab. No.	Sampling Date	Sampling Time	Sampling Temp C°	Source and Location
Fe PPM	Mn PPM	Pb PPM	Cr PPM	Cd PPM	Zn PPM		17.6.87			
<0.05	<0.03	<0.1	<0.03	<0.02	<0.05	L87/3386			Well no. 6	بئر رقم ٦ / صحم الوادي الابيض
<0.05	<0.03	<0.1	<0.03	<0.02	<0.05	/3427			Well no. 1	بئر رقم ١ / " " "

Date : [illegible]

Lab. Chief : [illegible]

Date :

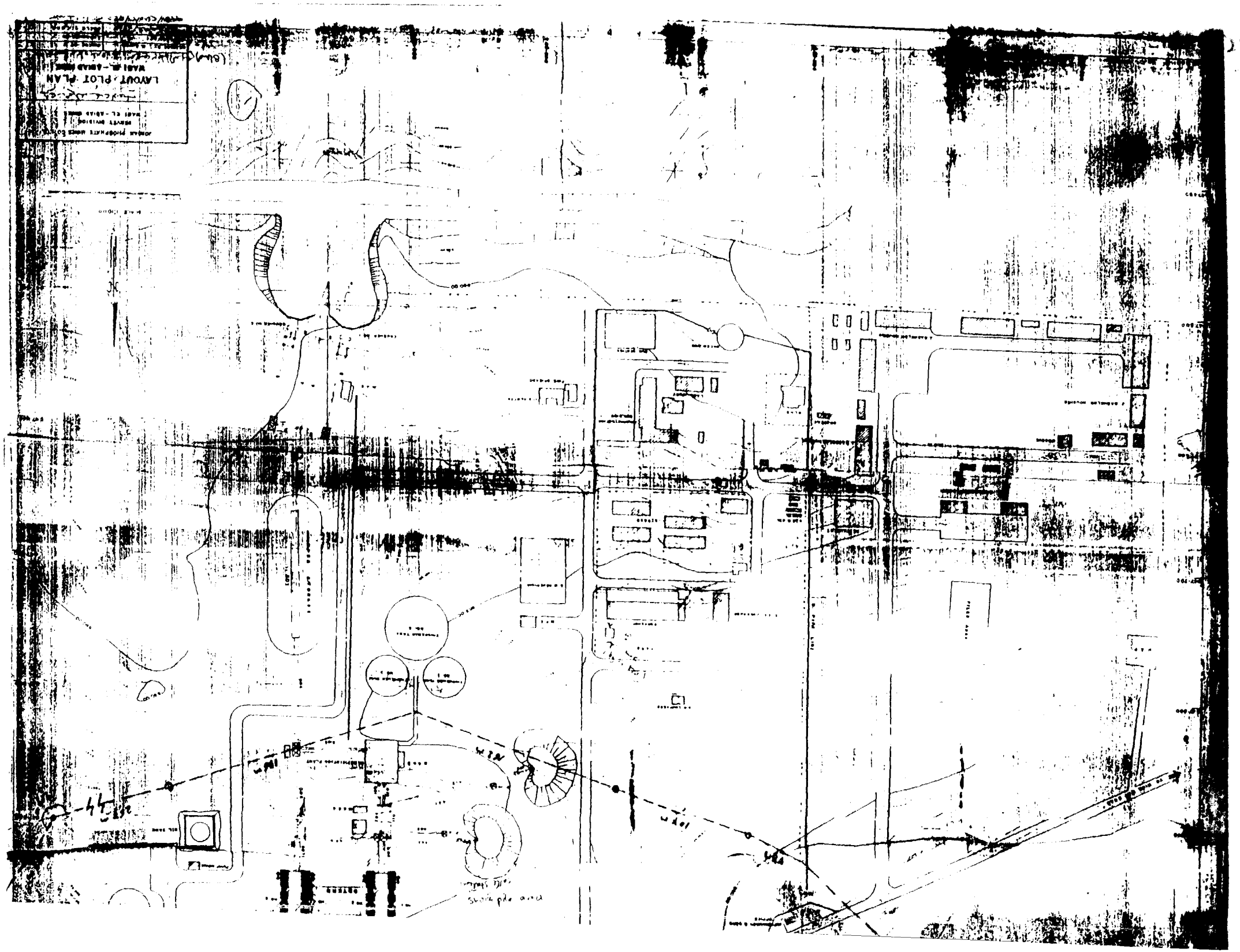
LAYOUT / PLOT PLAN

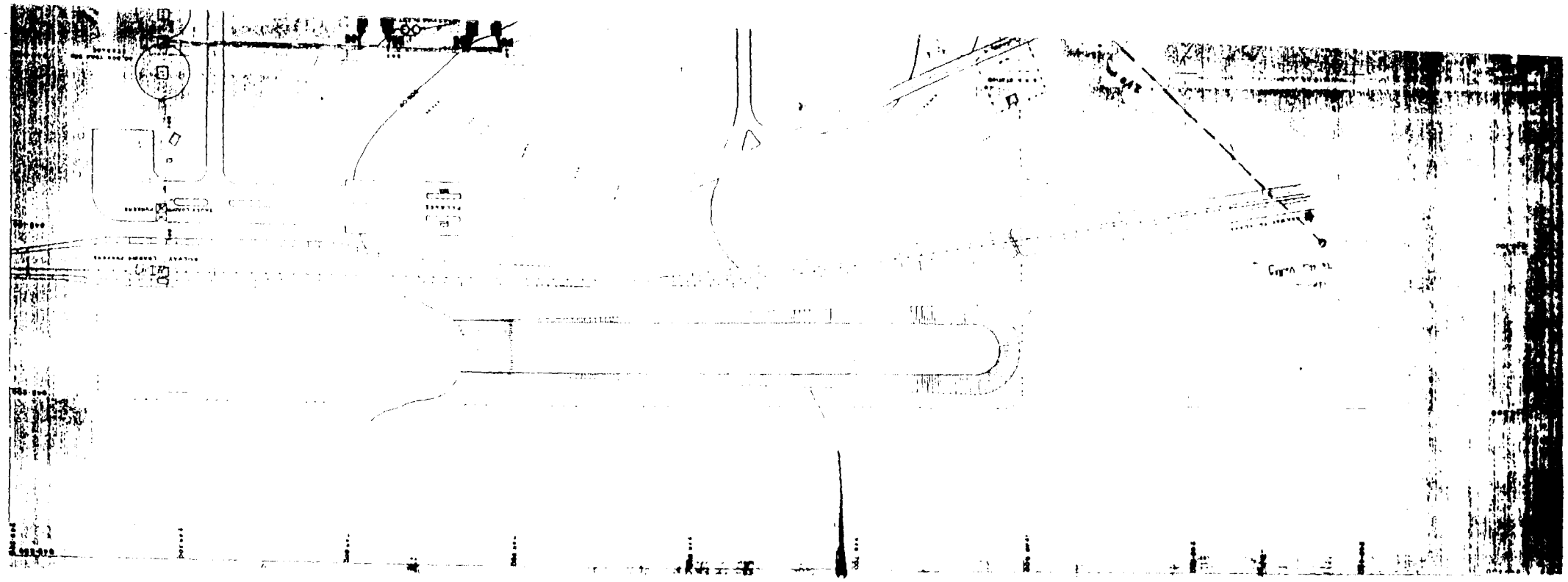

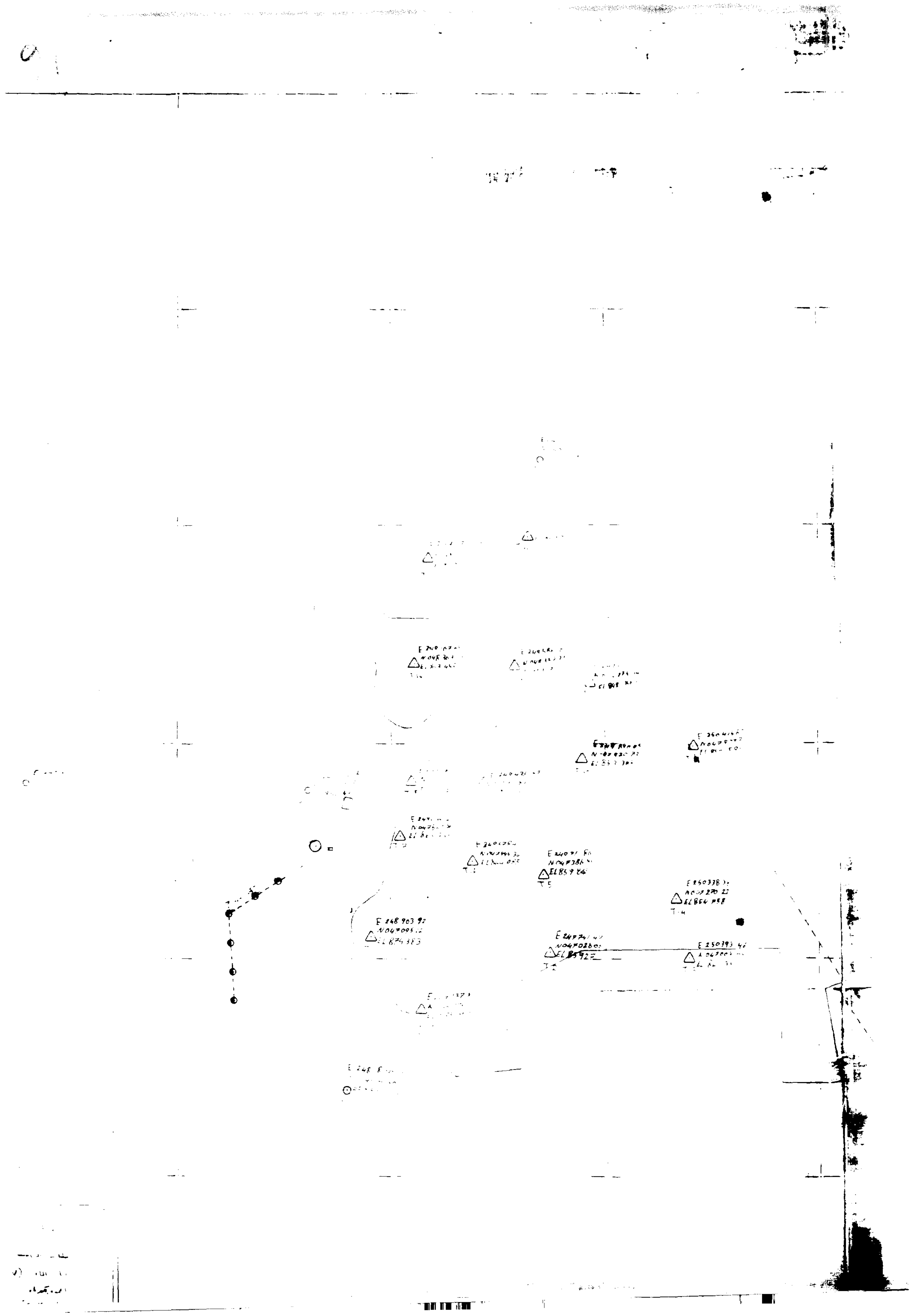
E 248 903 92
EL 874 383
T-4

THE HASEMITE KINGDOM OF JORDAN

JORDAN PHOSPHATE MINES CO.

APPENDIX D

BACKGROUND MATERIAL REPORT

UNITED STATES AGENCY
FOR INTERNATIONAL DEVELOPMENT

PHOSPHATE MINING INDUSTRY

WATER QUALITY IMPROVEMENTS AND CONSERVATION PROJECT

Industrial Wastewater Discharge Prevention Program

Development Alternatives, Inc.

HARZA Consulting Engineers and Scientists

August 1994

PHOSPHATE MINING INDUSTRY BACKGROUND MATERIALS

INDUSTRIAL WASTEWATER DISCHARGE PREVENTION
WATER QUALITY IMPROVEMENT AND CONSERVATION PROJECT

Amman, Jordan

TABLE OF CONTENTS

1.0 INTRODUCTION 1
1.1 BACKGROUND 1
1.2 OBJECTIVES 1

2.0 PHOSPHATE MINING 3
2.1 PHOSPHATE MINING INDUSTRY IN JORDAN 3
2.2 PHOSPHATE MINING PROCESS IN JORDAN 4

3.0 PHOSPHATE MINING AND PROCESSING IN THE UNITED STATES 6

4.0 WASTEWATER, SOLID WASTES AND PARTICULATE EMISSIONS 7
4.1 WASTEWATER DISCHARGES 7
4.2 AIR EMISSIONS 8
4.3 SOLID WASTES 10

5.0 STATE OF THE ART - POLLUTION PREVENTION AND CONTROL 11
5.1 AIR POLLUTION 11
5.2 WATER POLLUTION 11
5.2.1 Containment 12
5.2.2 Separation and Control of Wastewater 12

6.0 POLLUTION PREVENTION, WASTE MINIMIZATION AND WATER CONSERVATION OPPORTUNITIES 13
6.1 EMERGING TECHNOLOGIES 13
6.2 WATER POLLUTION CONTROL PREVENTION AND MINIMIZATION 14

7.0 REFERENCES 17

TABLES

FIGURES

1.0 INTRODUCTION

This document presents the materials collected as background information for a pollution prevention, waste minimization, and water conservation audit of the Jordan phosphate mining industry.

1.1 BACKGROUND

Development Alternatives, Inc. (DAI) under a contract with the United States Agency for International Development (USAID) is performing an Industrial Wastewater Discharge Prevention Program in Amman, Jordan. This Program is one of the four components of the Water Quality Improvement and Conservation project funded by the USAID. The Program is being performed by DAI with full coordination between the Ministry of Water and Irrigation and the Amman Chamber of Industry. This Program includes conducting pollution prevention and waste minimization (PP/WM) audits, feasibility studies, and designing for demonstration activities at selected industrial facilities.

PP/WM techniques are defined as any techniques to prevent or reduce waste generation by source reduction or recycling activities. These activities must reduce either the volumes or the concentrations of pollutants generated prior to treatment, storage, or disposal of the waste.

Based on a ranking methodology, the PP/WM Committee has selected ten industries with potential needs for PP/WM audits. One of these industries is the "phosphate mining industry." Harza Consulting Engineers and Scientists (Harza), Chicago/USA, has been retained by DAI to lead the PP/WM audit for this industry.

The purpose of these audits is to assist the industries in the Amman-Zarqa Basin to assess pollution problems and the alternative solutions to achieve desired levels of pollution prevention, water conservation, and wastewater treatment under the following subtasks:

- Subtask 1.1 - Audit Coordination;
- Subtask 1.2 - PP/WM Background Materials Preparation;
- Subtask 1.3 - Pre-Investigation Meeting;
- Subtask 1.4 - Audit;
- Subtask 1.5 - Post-Inspection Meeting; and
- Subtask 1.6 - Audit Evaluation Report.

1.2 OBJECTIVES

In this document, background information has been assembled by performing a comprehensive literature review. The purpose of the literature review was to identify the available techniques and technologies being practiced for PP/WM for the industry under Subtask 1.2. The objective of this document is to present the results of this review with a focus on the most effective techniques and clean technologies being practiced for PP/WM for the phosphate industry.

The literature review includes, at the least, the following sources: published literature and personal contacts with the United States (U.S.) Environmental Protection Agency (EPA). The literature consisted of PP/WM related articles, journal articles, conference proceedings, U.S. EPA documents and communications, and books on pollution and pollution controls.

2.0 PHOSPHATE MINING

The phosphate fertilizer industry is totally dependent on phosphate rock as its major raw material. After mining and preparation, the rock is used directly in the production of phosphoric acid, normal superphosphate, triple superphosphate, nitrophosphate, electric furnace phosphorus, and defluorinated animal feed supplements. Phosphoric acid is subsequently used to produce superphosphate, ammonium phosphates, complex fertilizers, superphosphoric acid, and dicalcium phosphate. The phosphate rock industry consists of mining and rock processing operations centered close to ore reserves.

Chemically, phosphate rock may be considered to contain a substituted fluorapatite $3Ca_3(PO_4)_2.Ca_2F$. Nearly all phosphate ores contain a modified form of this structure in which some of the phosphate is replaced by fluoride and carbonate. The total fluoride content of typical phosphate rock is approximately 4 to 5% by weight, expressed as fluorine.

The ingredient of the rock that is of economic interest is tricalcium phosphate (TCP), $Ca_3(PO_4)_2$, also known in industry as bone phosphate of lime (BPL). The rock is usually graded on the basis of its BPL content, e.g., 62 BPL rock contains 62% TCP by weight.

2.1 PHOSPHATE MINING INDUSTRY IN JORDAN

Jordan Phosphate Mines Co. Ltd. (JPMC) was founded in 1934 as a private firm to exploit the phosphate reserves of the Russeifa area, 15 kilometers (km) northeast of Amman. In 1953, JPMC was incorporated as a public shareholding company jointly owned by the government of Jordan and the private sector. From 1953 until 1988 three other production sites were developed in south Jordan, namely the Alhassa mine (1962), the Alabaid mine (1979), and the Elshidiya mine (1988). The current yearly production of JPMC is approximately 7 million tons of phosphate rock ranging between 66-75% TCP. The design production capacities of these three operating mines are given in Table 1. The Alabaid mine has been selected for the PP/WM audit.

The phosphate formations mined in Jordan cover about 60% of the country's total area in the formations of the Upper Cartaceous covering a wide belt of central Jordan, and lie near the surface. The phosphate deposits at Alhassa and Alabaid are found in two horizons in a lenticular bed whereas at Russeifa and Elshidiya they occur in continuous beds.

Phosphate mining in Jordan is typically open pit mining. An overburden layer is removed and a layer of phosphate rock is exposed. The rock is then removed from the deposit by dynamite blasting. Rocks are usually hauled by truck to the processing plant.

JPMC produces several grades of phosphate rock ranging from 66 to 75% TCP content in addition to the lower grades (62 to 66% TCP) produced to meet the special requirements of some customers. Upon completion of new beneficiation units at Elshidiya mine [illegible] scheduled for 1995, a higher grade production unit of approximately 77% TCP will be installed. After 1995, the production of mine-oriented materials should continue to follow the increasing production in Elshidiya mine through 2000, and then starting to decrease production after the year 2000. The production in Alhassa and Alabaid will stop by the year 2000 or before.

2.2 PHOSPHATE MINING PROCESS IN JORDAN

The following section generally described the phosphate mining process used in Jordan, shown pictorially in Figure 1 of this report.

Mining

The exploitation of phosphate started at the Russeifa mine by manual underground mining using the "room and pillar" method. In 1956 semi-mechanized mining was adopted and was also used at the Alhassa mine starting in 1962. Mechanized open cast mining was first applied in 1959 at Russeifa, where the stripping ratio of overburden to phosphate is favorable. Since then, this method has been in continuous use at Russeifa. It was introduced in 1966 at Alhassa and in 1979 at Alabaid.

In open cast mining, the overburden is drilled, blasted, and the broken and loosened material is piled and loaded into dumptrucks. The sterile material is transported into waste dump areas less than 1 000 meters away.

The uncovered phosphate bench is usually loosened by ripping, drilled and blasted if necessary, and loaded into dumptrucks for hauling to crushing and screening plants.

Piles of mined phosphate can literally form mountains that may potentially provide obstacles for water courses, contaminate groundwater basins, and increase the salinity of surface and groundwater.

Ore Processing

Crushing and Screening

Raw phosphate from the mine sites is hauled to jaw or impact crushers, rated at 250 - 450 tons per hour. All material is fed to the crushing and screening plants where the oversized material (> 1/2 inch) is rejected and stockpiled for further treatment in the future. The < 1/2 inch material is either fed to the dryers or to the beneficiation plants.

Beneficiation and Drying

Phosphate from the crushing and screening plants, which contains 66 to 68% TCP from the Russeifa mine or 70 to 72% TCP from both the Alhassa and Alabaid mines, is fed directly to rotary cascading dryers operated with heavy fuel oil to produce a dry product which contain 1 - 3% moisture, know as unbeneficiated grade phosphate. Phosphate ores which contain 60 - 62% TCP at Russeifa or 66 - 68% TCP at Alhassa and Alabaid are fed to beneficiation plants for upgrading.

In the beneficiation plants, phosphate is fed to slurriers, log washers, and wet screens to reject the 4 mm (or + 6 mm) oversize material. Two or three stages of agitation are followed by hydrocycloning, where the underflow of + 270 mesh products are fed to pusher centrifuge filters to produce phosphate cakes which contain 15 - 18% moisture. The overflow of the

hydrocyclones is rejected as slimes which contain poor phosphates with impurities of silica, carbonates, and clayey materials. The phosphate cakes are fed to heavy fuel oil-fired dryers to produce beneficiated grades of 66 - 68% TCP at Russeifa and 73 - 75% TCP at Alhassa and Alabaid.

Fine phosphates from dryers separated by the electrostatic precipitator at Russeifa mine are collected and bagged in 50 kilogram bags. This material, named "JORPHOS", is sold for direct application in acidic soils. It contains 29.3 - 30.2% P_2O_5 and its granulation is 80% <100 mesh size which contains 30% <200 mesh size.

3.0 PHOSPHATE MINING AND PROCESSING IN THE UNITED STATES

Typical unit operations involved in the phosphate mining industry are crushing, grinding, screening, flotation, thickening, filtering, drying, bagging and storage. The mining and beneficiation processes vary somewhat at different locations based on grade, screen analysis and pebble concentrate in the feed.

There are two reported beneficiation process in the U.S. eastern and western. They are briefly described below and shown in Figures 2 and 3.

Eastern Process

This process consists of the following unit operations:

- Screened slurry pumping to the beneficiation facility
- Washing using hammer mills and log washers
- Separation of sand and clay (slimes) from phosphate bearing pebbles and sands by screening
- Cyclone separation of slimes (colloidal clays, fine sands)
- Slimes discharge to ponds
- Underflow coarse material to flotation processing (tailings to disposal)
- Drying and grinding
- Packaging

Western Process

This process varies slightly from the eastern process and consists of the following unit operations:

- Crushing and scrubbing of ore material
- Screening, crushing by pug mill and classification
- Slimes removal using cyclones and thickeners. (Slimes to settling pond or tailings pond)
- Underflow coarse material to floatation and filtration
- Drying and grinding
- Packaging

The process used in the Jordan facilities appears to be similar to the eastern process but without the flotation operation.

4.0 WASTEWATER, SOLID WASTES AND PARTICULATE EMISSIONS

The significant pollution problems reported in the phosphate mining industry are

Wastewater

- Thickener overflows
- Hydrocyclone overflow
- Flotation cell underflow
- Minewater drainage

Air Emissions

- Particulate emissions from crushing, drying and packaging operations

Solid Wastes

- Slimes (fine waste material)
- Tailings (heavy waste material)

Each of these waste discharges is discussed briefly below

4.1 WASTEWATER DISCHARGES

Phosphate mining operations use large amounts of water primarily for washing, wet screening, flotation processing and transportation. Other uses are for non-contact cooling water and for domestic purposes. A typical water usage rate is 41.00m^3/metric ton of product

Other discharges, such as rainfall and surface runoff, may contribute to the total effluent flow generated at a mining facility

Suspended solids are the principal pollutant in wastewater discharges. Treatment technologies available for removing suspended solids are varied, and only a small number are widely used. The unlined settling pond is, by far, the most widely used form of control technology

The phosphate rock slimes problem may well be the most important of all phosphate ore processing difficulties. The industry has been active for a number of years attempting to devise methods for dewatering the slimes, but until available schemes become economically feasible, settling ponds will continue to be widely used

Phosphate slime, which constitutes about one-third of the total matrix mined, has been a disposal problem to the phosphate industry ever since mining began in Polk County, Florida, about 1890. The disposal problem increased significantly in the late 20's with the introduction of the flotation process - the matrix mined for flotation has a higher clay content than ore mined before the use of flotation.

The treatment of slimes consists of gravity settling through an extensive use of ponds. At 3 to 5% solids, the slimes either flow by gravity through [illegible] or are pumped directly to the settling ponds

After an initial settling and clarification period, some of the water containing the slimes is reclaimed and can be recycled to the plant. However, subsequent settling of the slimes to release more water is very slow. The slow settling characteristic, or inability to dewater, is a common property of Florida phosphate slimes. At present, over 202.5 x 10^5 m^2 of active and inactive settling areas exist, surrounded by more than 480 km of earth dams. About 16.2 x 10^5 m^2 of new settling areas are being constructed each year. The magnitude of the disposal problem is readily appreciated when it is realized that the industry produces some 36 million metric tons of these waste clays (dry basis) annually. A chemical analysis of slimes solids is presented in Table 2.

Current dewatering concepts are briefly presented in Figure 4. Other processes which have been proposed include freeze-thawing, electro-osmosis, chemical coagulation, spherical agglomeration, and drainage systems.

These potential solutions to the problem are being evaluated, and the likelihood of finding feasible alternatives to above-ground impoundments appears very good.

Mine water drainage is generated only when phosphate mines lie below the water table. In these cases, the water table must be lowered with massive pumping to drain the mine.

4.2 AIR EMISSIONS

The major air pollutant of concern resulting by the production of chemical and fertilizer minerals is respirable (less than 7-um geometric mean diameter) particulate matter. This particulate contains free silica, the crystalline silicon dioxide which is mostly quartz, tridymite, and cristobalite.

The American Conference of Governmental Industrial Hygienists (ACGIH) has suggested a threshold limit value (TLV) for respirable particulates as shown in the following equation.

$$TVL = \left(\frac{10}{\%\ quartz + 2}\right) \quad (for\ \%\ quartz > 1\%)$$

where TVL = *threshold limit value, mg/m³*
$\%\ quartz$ = *percent of quartz as respirable dust*

Respirable particulates with less than 1% quartz are termed "inert" and a TLV of 1- mg/m³ is suggested for these. The criteria document on crystalline silica published by the National Institute of Occupational Safety and Health (NIOSH) states that occupational exposure shall be controlled so that no worker is exposed to a time-weighted average concentration of free silica greater than 50 ug/m³ as determined by a full shift sample for up to a 10 hr workday, 40 hr workweek. In addition, particulate matter is one of the air quality criteria pollutants [illegible] from a 24-hr primary ambient air quality standard of 250 ug/m³.

Phosphate rock production in the U.S. accounts for an estimated 44% of the total particulate emission from chemical and fertilizer industry mining and beneficiation. The high emission rate is caused by the large volume of material [illegible] and the nature of the material [illegible]

to run an industry of its size. For example, the loading of railroad hopper cars, a major source of particulates, is an operation used only by industries with large amounts of material to handle.

The sources of air emissions during phosphate rock mining and processing are pictured in Figure 5. The emission factor which corresponds to each source and the following discussion are summarized in Table 3.

No sampling for the dragline source in Florida has been done. However, some estimates have been made on fugitive emissions from other source assessment studies on mining. Dust emissions from surface mining of coal were measured by MRC as 0.085 g/kg of overburden removed. Studies have indicated that overburden removal was the largest emission source at strip mines, estimated at 0.05 g/kg. Engineering Research and Technology, when providing input on the air quality aspects of coal development in northwest Colorado, proposed an emission factor of 0.024 g/kg of overburden removal including a correction for climatic conditions and control measures (watering) at the mines.

Overburden removal for phosphate rock mining is believed to be much less of a fugitive dust source than in coal mining because much less overburden material is handled: the average overburden depths in Florida are about 6 m versus up to 60 m for coal mining. Also, phosphate rock deposits in Florida are generally mined in areas where the water table is near the surface. Because the moisture content of the overburden is high, less dust is produced.

An emission factor for the overburden removal of phosphate rock lies toward the bottom of the range offered by PEDCo: 0.024 g/kg to 0.05 g/kg of overburden. PEDCo estimated particulate emissions from dragline operations at an open pit copper mine in Butte, Montana. The emission rate of ore mined was 0.004 g/kg. This excavation area was noted to be moist and nondusting. Although actual measurements were not taken at phosphate rock mines, an emission factor of this order of magnitude was felt to be representative for the mining of the ore.

After the overburden is removed, the ore is placed into sluice pits, broken up by hydraulic monitors, and subsequently pumped to the beneficiation plant. Each company's beneficiation methods differ slightly and are dependent on the characteristics of the matrix. In each case, however, the beneficiation is a wet process and therefore not a source of air emissions.

The beneficiated rock is transferred to open storage piles. As this material is often moist, no controls are used or expected in the future, although some emissions do result from the operations. The moist material is usually conveyed to a rotary dryer.

Emission factors for phosphate mining are based on Florida phosphate operations. Western phosphate mining operations are recognized as having greater air emissions because the rock is not generally wet-sluiced to beneficiation operations and dust may occur in transport from pit to processing plant. In addition, the overburden removal for western phosphate mining averages more than 6 m and is drier than the Florida overburden. For western mines, a more realistic overburden emission factor would be near the high end of the range or 0.05 g/kg of overburden. Thus for western mines, the overall emission factor could be about 7% greater than the factor for Florida mines.

4.3 SOLID WASTES

Solid wastes generated in mining operation are non-phosphate pebbles, clay, and sands separated from phosphate bearing materials. These solids are discharged as slimes (very fine and colloidal materials) and tailings (coarser materials) and stored in ponds for permanent disposal.

5.0 STATE OF THE ART - POLLUTION PREVENTION AND CONTROL

5.1 AIR POLLUTION

If the overburden stripping and phosphate matrix mining is carried out under somewhat "wet" conditions, industry does not consider this a source of air emissions. Therefore, they have no controls on this operation and do not expect a future need. In the absence of wet conditions controls may be needed.

The beneficiated rock in open storage piles is moist. No controls are used or expected in the future, although some emissions do result.

Typically, the moist material is conveyed by an underground belt to a rotary dryer. The dust from the dryer is handled by cyclone wet scrubber combinations. In this way, the emission becomes a stack emission. Collection efficiencies of this control device are greater than 95%, and no further controls are expected in the future. At this point, the material may be ground, sometimes under wet conditions; the procedure varies from plant to plant. One plant does not use a grinding operation at all.

The material is transferred from the dryer to storage silos. Control devices on rock transfer junctions are typically scrubbers, with an average collection efficiency greater than 95%. From the storage silos, the rock is dropped into railroad hopper cars for transportation to fertilizer manufacturing centers. In facilities typical of the phosphate industry, loading is accomplished manually from overhead storage by an operator standing at the roof level of the railroad car. Usually the drop areas have flexible rubber couplings which deliver the rock to within about 0.610 m (2 ft) of the top of the loading door; this helps direct the rock. However, the loading problem is not dusting caused by the drop, but the pickup of dust in the displaced air from the railroad car. The industry is working to control the dust in this operation.

Companies have installed extensive ductwork systems to capture the dust and exhaust it to a scrubber. However, the equipment must be used properly. Dust-catching enclosures must be clamped onto the railcar doors tight enough to capture the dust. One plant uses a mechanized system in which the ends of eight loading ducts fit over the tops of the eight railcar doors and exhaust the displaced air to a scrubber. In older facilities, this may not be possible. At one location, for example, the available headroom between the bottom of the storage silo and the top of the railcars is limited, and cars are typically not of uniform height or door configuration. This situation required the design of a system to load the cars from an outside hopper adjacent to the silos, allowing for more working space. In either case, it appears that the future trend is first to contain the fugitive emission and then to treat it as a stack emission.

Table 4 lists the latest technologies used to prevent air pollution at each unit operation.

5.2 WATER POLLUTION

Control practices such as [illegible] selection of raw materials, good housekeeping, and [illegible] are [illegible] important in the mineral industries. Raw materials

are fixed by the composition of the ore. Good housekeeping, leaks and spills have little impact on waste loads. Non-contact water is rarely used in these processes.

The areas where control is important include wastewater containment and separation and control of mine drainage water, process water, and rain water. These areas are further described below.

5.2.1 Containment

Most wastewater treatment and control facilities in the chemical and fertilizer minerals industry use one or more settling ponds. During periods of heavy rainfall, these "ponds" are often washed out, and the settled solids may be swept along as well. In many other cases, the pond may remain intact during rainfall, but its function as a settling pond is significantly impaired by the large amount of water flowing through it. In addition to problems caused by rainfall and flooding, waste containment in ponds can be troubled with ground seepage around and beneath the pond, escape through pot holes, faults and fissures below the water surface, and the physical failure of pond dams and dikes.

In most cases, satisfactory pond performance can be achieved by proper design. When this is not possible, alternative treatment methods--thickeners, clarifiers, tube and lamella separators, filters, hydrocyclones, and centrifuges--can be utilized.

5.2.2 Separation and Control of Wastewater

In these industries, wastewater may be separated into three categories: mine drainage water, process water, and rain water runoff.

Mine drainage water and process water are typically controlled and contained by pumped or gravity flow through pipes, channels, ditches and ponds. Rain water, though, is often uncontrolled; it may either contaminate process and mine drainage water or flow off the land independently as nonpoint-source discharges. Rain water runoff increases suspended solid matter in rivers, streams, creeks or other surface waters used for process water supply.

Suspended solids are the principal pollutant in the wastewater discharges of the mineral industry. The treatment technologies available for removing suspended solids from wastewater are numerous and varied, but only a relatively small number are used widely.

Table 5 shows the approximate breakdown of usage for the various techniques.

Generally, the current industry experience with settling ponds shows effluents with total suspended solids concentrations ranging from 14,000 mg/m^3 to 703,000 mg/m^3. Performance data for some treatment systems are presented in Table 6.

Chemical and fertilizer mineral operations are typically conducted in relatively isolated regions where there is no access to publicly owned wastewater treatment plants.

6.0 POLLUTION PREVENTION, WASTE MINIMIZATION AND WATER CONSERVATION OPPORTUNITIES

Pollution prevention is achieved by implementing programs which will result in reduction in waste generation. Waste generation, in turn, can be achieved by looking into ways to improve and/or modify unit processes and operations and process efficiency without affecting the product quality. Some of the approaches being evaluated are discussed below.

6.1 EMERGING TECHNOLOGIES

New methods to collect dust emissions from beneficiation plants, particularly in the rail car loading area, are coming into view.

The development of hydrometallurgical processes to recover phosphorus from matrix or concentrates by direct acidulation may make it possible to improve recovery rates and reduce water disposal problems. New mining and processing techniques may be developed to utilize the potential resources of the Florida Hawthorn Formation or the Phosphoria Formation in the Western United States.

Wet grinding is one of the technologies being considered to minimize air pollution for phosphate rock processing facilities. It is described below.

Wet Grinding

The most promising air pollution control technique for dryers and calciners is the recent move toward wet grinding of rock for the manufacture of wet-process phosphoric acid (WPPA). The rock is ground in a water slurry and then added to the WPPA reaction tanks without drying. This has not been done previously because the water entrained with the ground rock would require a stronger acid in the WPPA reaction (or be removed by evaporation) to maintain the 54% P_2O_5 strength needed for production of fertilizer. Historically, 93% sulfuric acid has been diluted to 58% for the WPPA reaction prior to addition to the reactor to permit removal of the heat of dilution. If added to the reactor at 93% strength, the heat of dilution coupled with the heat of reaction would exceed the capacity of the vacuum flash cooler used for temperature control. Also, it was widely accepted that the higher temperatures would result in formation of smaller crystals of waste gypsum which would complicate the separation of product acid from waste gypsum.

Two companies have overcome their reservations about the wet grinding process. They have designed larger flash coolers on the reactors to remove the heat of dilution, and have found no significant difference in the crystal size of the gypsum. The products from the reactor are fed to the evaporators at 28 to 32% P_2O_5 acid, the same as the conventional WPPA process.

The only significant problem created by wet grinding is the water balance around the plant. EPA's effluent water regulations require zero discharge by 1985. Wet grinding adds about 300 gallons per minute to the effluent [illegible] of the [illegible]

WPPA plants are already finding difficult to control. However, the potential savings (elimination of the energy intensive phosphate rock dryer and its air pollution control system and air pollution controls for the grinder) is a strong incentive to the operator.

Plant management contends that the major driving force for the process is not improvements in technology, but increasingly expensive fuel costs and stringent air emission regulations. It is now less expensive to treat the wet rock than to contend with high energy costs and increasingly stringent air regulations.

The impact of the wet grinding process could be far-reaching since about 70% of all phosphate rock is ultimately used to produce fertilizer, and 85% of the rock used for fertilizer must first be converted to phosphoric acid. If wet grinding proves to be a trend in the industry (and present indications are that it will), the growth rate for phosphate rock dryers will become negligible. Of course, there will continue to be a requirement for dry rock unless ways are found to introduce wet ground rock into the processes other than WPPA. Much of this need may be filled by the capacity of existing dryers rather than construction of new ones. The need for emission controls on phosphate rock grinders, though diminished, will continue since the calcination process will probably continue at its current rate of growth and calcined rock must be ground.

Wet-rock grinding has five advantages:

(1) Reduces by about half the capital expense - from receipt of unground wet rock through the point of feeding it into the acid processing system.

(2) Eliminates dry-rock dust pollution.

(3) Improves fuel economy by 2.5 gallons per ton of phosphate rock ground, which combines with electrical power savings to reduce operating costs by $3.00-$4.25 per ton of P_2O_5.

(4) Improves reliability, thus reducing the required amount of surge of ground rock. If a plant is located near a mine, a rock slurry can be pumped directly to the plant from the mine, eliminating rail transportation and belt conveyors.

(5) Reduction in radiation levels will occur as dry-rock grinding is replaced with wet-rock grinding and dryers are eliminated. This will lower fugitive dust levels, thus lowering escaping radionuclides, and also result in lower radiation levels in the immediate vicinity of the grinders and the eliminated dryers.

By converting from dry to wet grinding, a company expects to save 8 million gallons of fuel oil and 18 million kWh of electricity per year in producing wet process phosphoric acid at its New Wales complex. Conversion will cost about $11.3 million.

6.2 WATER POLLUTION CONTROL, PREVENTION AND MINIMIZATION

As discussed earlier, the slime water discharge is the major source of wastewater. Any improvement in slime settling [illegible] will [illegible] stabilize or improve the quality of

water associated with slime discharge, thereby allowing the industry to recycle more and better quality water.

The improvement in settling of colloidal or fine clay particles can be achieved by using effective and appropriate flocculating and coagulating agents. Clay particles are negatively charged. A coagulating agent such as alum (aluminum sulfate) can effectively bind these particles and improve their settling rate. An addition of other polymeric flocculating agents, either cationic or non-ionic, generally further improves the settling properties.

Addition of flocculating agents prior to dissolved air floatation, hydroclones, centrifuges, or slime pond will improve the dewatering performance of these systems. This will result in better solid/water separation. The important aspect is to determine if addition of such agents will impact the product quality. Certainly addition of flocculating agents prior to the slime settling ponds will help improve settling and overflow water quality.

As stated in Section 4.0 other processes currently being evaluated are electro-osmosis, freeze-thawing, spherical agglomeration and drainage system. High efficiency clarifier designs, such as tube settlers, inclined plate clarifiers, and reactor-clarifiers with sludge recirculation can be further considered to improve the slime settling and removal processes and improve water recycle quality.

It should, however, be noted that an addition of a chemical agent may increase the sludge volume but it will be offset by increased density and sludge compactness.

Improving the settling characteristics should allow the facility to recycle an improved quality water from slime holding ponds or clarification devices. The recycled water can be used for washing and wet screening. A small amount of water will need to be blown down to control the build-up of impurities within the system. The impurities that will need to be controlled are:

- Total suspended solids,
- Total phosphorous,
- Fluoride, and
- pH

The blowdown water can be treated and further recycled. A two-stage lime neutralization process can be used for the blowdown treatment.

The first treatment stage provides sufficient neutralization to raise the contaminated water (Containing up to 9000 mg/L F and up to 6500 mg/L P) from pH 1.0 - 2.0 to pH 3.5 - 4.0. The resultant treatment effectiveness is largely dependent on constancy of the pH control. At a pH level of 3.5 to 4.0, the fluorides will precipitate principally as calcium fluoride (CaF_2).

The partially neutralized water following separation from the CaF_2 (pH 3.5 - 4.0) now contains 30 - 60 mg/L F and up to 5500 mg/L P. This water is again treated with lime sufficient to increase the pH level to 8.0 or above to remove the phosphorus.

The reduction of the P value is strongly dependent upon the final pH level, holding time, and quality of the neutralization facilities, particularly mixing efficiency. The sludge from these systems can be disposed in the slime ponds. Ultimately, however, the additional fluorides and particulates (phosphate) and other minor impurities collected become part of the solid waste generated through the system.

7.0 REFERENCES

The following documents were reviewed to prepare this report

1. Bureau of Mines Phosphate Rock: Mineral Commodity Profiles U.S. Department of the Interior, Washington, D.C. 1983

2. Blakely, A. F. The Florida Phosphate Industry: A History of the Development and Use of a Vital Mineral. Harvard University Press, Cambridge, MA 1973.

3. Harris, George L. Jordan: Its People, Its Society, Its Culture. Chapter 15 ("Industrial Development"). HRAF Press, New Haven, CT 1950

4. Khaleq, Rania (Development Alternatives, Inc.) Background Information on Jordan Phosphate Industry. Personal Communication 1994.

5. U.S. Environmental Protection Agency "Developmental Document for Effluent Limitations Guidelines and New Source Performance Standards for the Other Non-Fertilizer Phosphate Chemicals Segment of the Propshate Manufacturing Point Source Category" USEPA, Washington, D.C. 1976

6. U.S. Environmental Protection Agency "Elimination of Washer Slimes from the Production of Phosphate Chemicals." Office of Research and Development, Research Triangle Park, NC 1976

7. U.S. Environmental Protection Agency "Environmental Impact Guidelines for New source Phosphate Fertilizer Manufacturing Facilities" WAPORA, Inc. Washington, D.C. 1981

8. U.S. Geological Survey "Hydrology and Water Quality of Unmined and Reclaimed Basins in Phosphate-Mining Areas West-Central Florida" U.S. Department of the Interior Washington, D.C. 1993

9. U.S. Environmental Protection Agency "Phosphate Rock Plants- Background Information for Proposed Standards (Draft EIS)" Office of Air Quality Planning and Standards, Research Triangle Park, NC 1979

10. U.S. Environmental Protection Agency "Source Assessment: Chemical and Mineral Industry, State-of-the-Art." Industrial Environmental Research Laboratory, Cincinnati, OH 1978

TABLES

TABLE 1: CURRENT DESIGN PRODUCTION CAPACITIES OF JORDAN PHOSPHATE ROCK MINES

Mine	Production (million tons/year)
Alhassa	3.5
Alabaid	2.5
Elshidiya	3.25 (as of 1995)
Total	9.25 (as of 1995)

TABLE 2: CHEMICAL ANALYSES OF AS-RECEIVED SLIMES SOLIDS
(Percent)

Chemical Analyses *	Sample																	
	1	2	3	4	5	6	7	8	9	10	11	12	13	14	15	Average	High	Low
[illegible]	8.3	12.8	18.5	18.6	18.4	26.9	21.6	16.4	9.1	18.7	18.7	9.6	24.6	11.2	10.1	16.2	26.9	8.3
[illegible]	5.1	8.2	13.7	15.7	16.2	19.7	17.3	13.6	5.9	13.5	11.0	8.3	17.2	8.7	9.7	12.0	19.7	5.1
[illegible] BPL[2]	11.1	17.9	29.9	29.9	35.4	43.0	37.8	25.3	12.9	29.5	24.0	18.1	42.6	19.0	21.2	26.2	43.0	11.1
[illegible] oxide / Phosphorus pentoxide	1.63	1.56	1.35	1.36	1.14	1.37	1.25	1.41	1.54	1.39	1.70	1.16	1.43	1.29	1.04	1.35	1.70	1.04
[illegible] oxide	6.7	2.3	4.0	1.5	0.8	2.0	1.4	3.2	3.6	2.7	6.2	1.6	3.0	2.2	1.6	2.9	6.7	0.8
[illegible] oxide	10.3	13.7	12.2	13.5	16.8	19.4	12.9	12.6	12.5	10.7	7.6	12.5	8.2	13.0	12.1	11.9	16.8	7.6
[illegible] oxide	4.6	4.3	2.5	1.9	1.7	3.6	3.2	2.3	5.5	5.4	2.7	3.3	3.6	8.3	2.8	3.4	8.3	1.6
[illegible]	47.6	46.1	30.4	33.4	28.2	23.1	27.5	33.5	45.8	34.5	34.0	49.1	28.6	49.5	46.6	36.5	49.1	23.1
[illegible] pentoxide	0.3	0.3	0.2	0.3	0.1	0.2	0.3	0.2	0.3	0.2	0.3	0.3	0.5	0.4	1.2	0.3	1.2	0.1
[illegible] pentoxide	0.5	1.4	0.6	0.8	0.6	0.6	0.8	0.2	1.3	0.5	0.5	1.5	0.4	1.1	0.8	0.8	1.5	0.2
[illegible]	1.1	1.2	2.3	1.6	1.6	2.2	1.8	1.6	0.7	1.4	1.4	1.0	1.8	1.0	1.2	1.5	2.3	0.7
[illegible]	1.1	0.8	1.7	1.0	0.5	1.5	0.5	1.9	1.0	0.6	1.8	0.4	1.0	0.6	0.7	1.0	1.9	0.4
[illegible] dioxide	2.2	1.3	5.0	1.5	1.0	3.4	1.3	4.6	2.9	1.2	5.3	0.7	2.2	1.1	1.0	2.3	5.3	0.7
[illegible]	0.22	0.17	0.21	0.41	0.11	0.36	0.22	0.22	0.10	0.14	0.18	0.12	0.31	0.21	0.17	0.20	0.36	0.10

[illegible] BPL x 0.45 % [illegible]

190

[illegible]

TABLE 3: AIR EMISSION SOURCES OF PHOSPHATE ROCK MINING AND BENEFICATION[a]

	Dragline		Drying	Silo Storage	Loading	Total
	Stripping of Overburden	Mining of the ore				
Emission factor, g/kg	0.025	0.0004	0.071	0.305	0.761	0.362
Control devices:						
Existing types	None	None	Cyclone and wet scrubbers	Scrubbers	Enclosure	b
Effectiveness, %	None	None	>95	>95	c	b
Future trends	None	None	None	None	Exhaust fugitive dust to control device	b

[a] Average of several process samples taken at one site. See Appendix H. [b] Not available. [c] Not applicable. [d] Not available.

TABLE 4: AIR POLLUTION CONTROL TECHNOLOGIES

Unit Operation	Major Applied Pollution Control Technology
1. Mining	Wetting mining area by trucks
2. Beneficiation	No air emissions due to wet operation
3. Conveyance	Generally rock is wet. No controls required.
4. Drying	Scrubbers
5. Calcining	Scrubbers
6. Grinding	Fabric Filters
7. Material Handling and Storage	▸ Enclosure for conveyors and piles ▸ Fabric filters for pneumatic conveyance

TABLE 5: CONTROL TECHNOLOGY AND ITS USE FOR REMOVAL OF SUSPENDED SOLIDS

Control Technology	Percent of Facilities Using Technology
Settling ponds (unlined)	95 to 97
Settling ponds (lined)	< 1
Chemical flocculation (usually with ponds)	2 to 5
Thickeners and clarifiers	2 to 5
Hydrocyclones	< 1
Tube and lamella settlers	< 1
Screens	< 1
Filters	< 1
Centrifuges	< 1

TABLE 6: PERFORMANCE OF TREATMENT SYSTEMS

Plant	Total Suspended Solids, g/m³		Percent Reduction	Treatment
	Infuent	Effluent		
Phosphate rock:				
A	5,620	193	96.56	Pond.
B	329	50	84.80	Ponds
C	1,684	21	95.45	Ponds
D	2,036	39	96.26	Unknown.
E	6,500	17	99.36	Ponds.
F	2,985	645	[illegible].39	Flocculating agent [illegible]

FIGURES

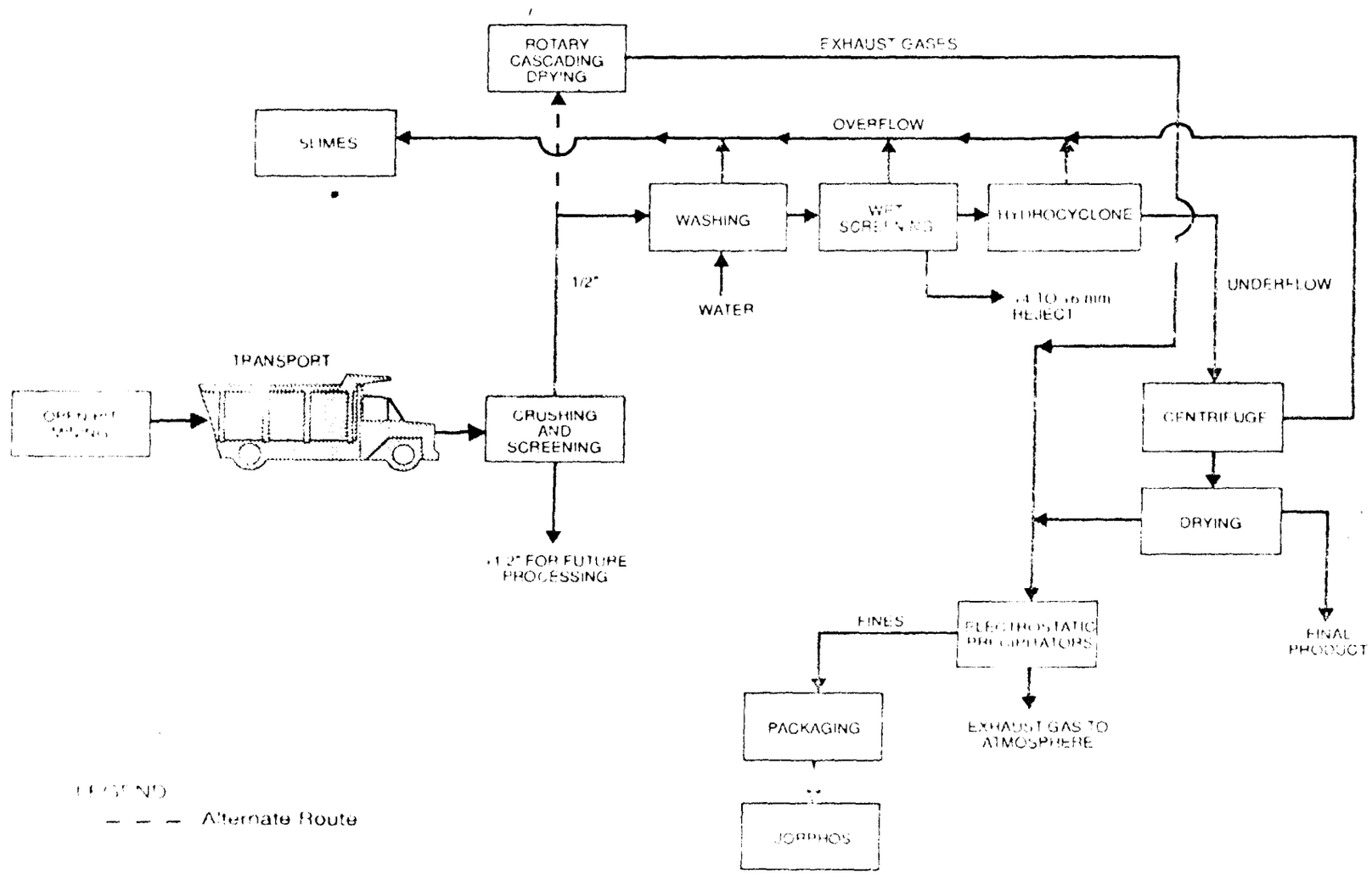

SOURCE: Phosphate Rock Plants, modified Figure 3.3 (EPA, 1979)

Figure 1

GENERALIZED FLOW SCHEME FOR JORDAN PHOSPHATE ROCK MINING INDUSTRY

INDUSTRIAL WASTEWATER DISCHARGE PREVENTION
WATER QUALITY IMPROVEMENT AND CONSERVATION PROJECT
Amman, Jordan

HARZA Consulting Engineers and Scientists

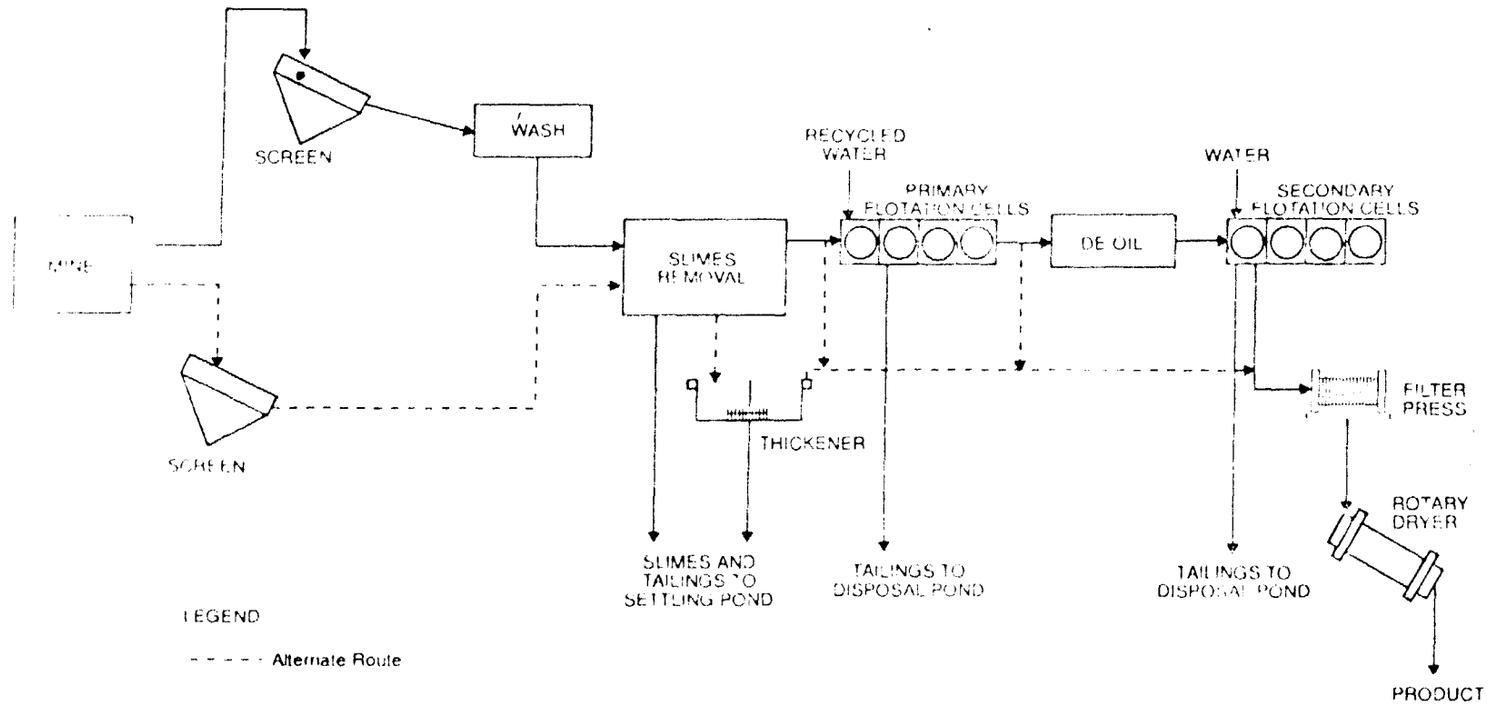

SOURCE: Source Assessment Chemical and Fertilizer Mineral Industry State of the Art (EPA, 1978)

Figure 2

U.S. PHOSPHATE ROCK MINING AND BENEFICIATION- EASTERN PROCESS

INDUSTRIAL WASTEWATER DISCHARGE PREVENTION
WATER QUALITY IMPROVEMENT AND CONSERVATION PROJECT
Amman, Jordan

HARZA *Consulting Engineers and Scientists*

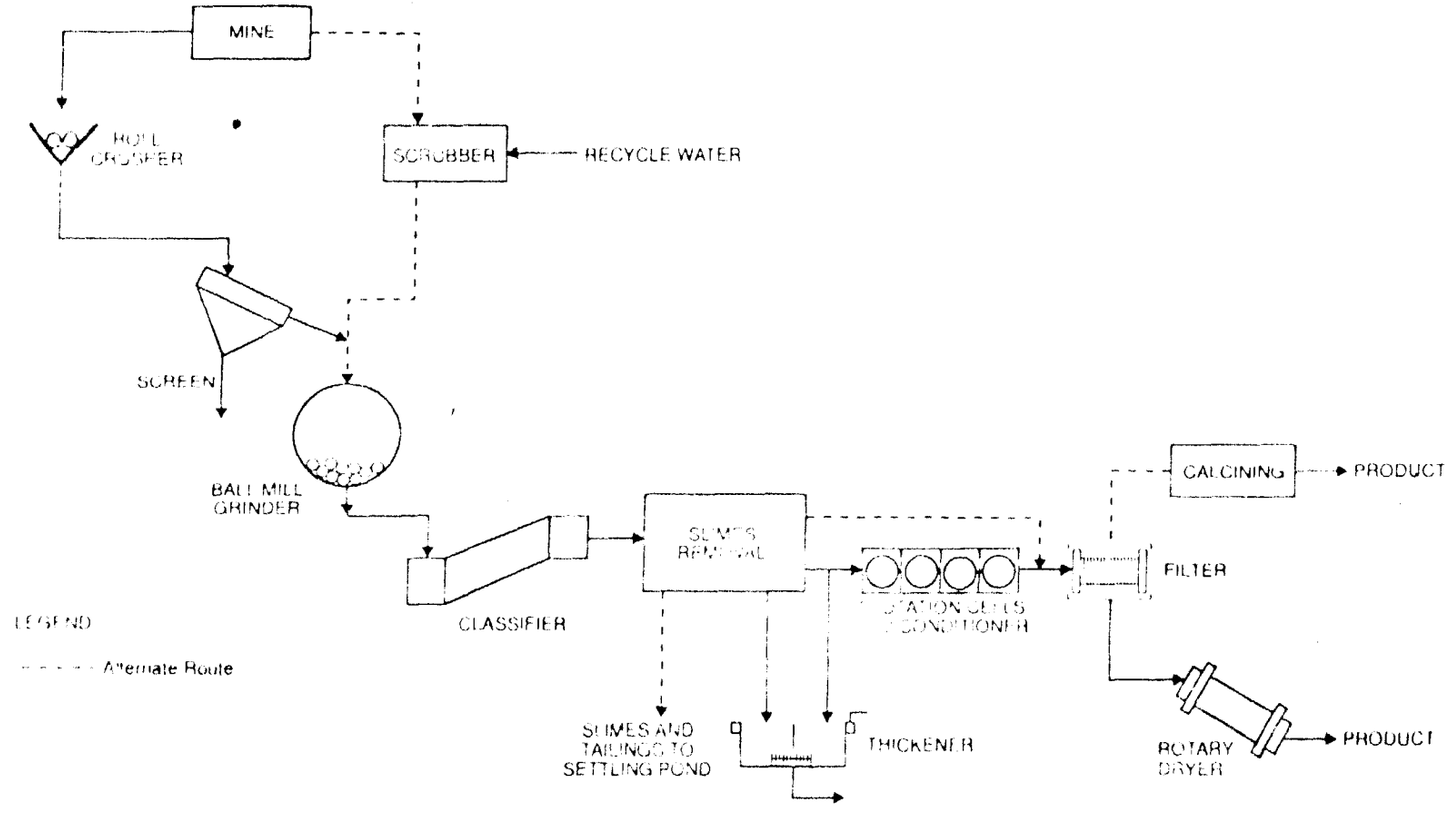

SOURCE: Source Assessment Chemical and Fertilizer Mineral Industry State of the Art (EPA, 1978)

Figure 3

PHOSPHATE ROCK MINING AND BENEFICIATION- WESTERN PROCESS

INDUSTRIAL WASTEWATER DISCHARGE PREVENTION
WATER QUALITY IMPROVEMENT AND CONSERVATION PROJECT
Amman, Jordan

HARZA *Consulting Engineers and Scientists*

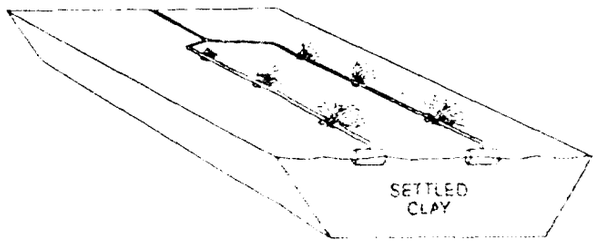

SAND SPRAY

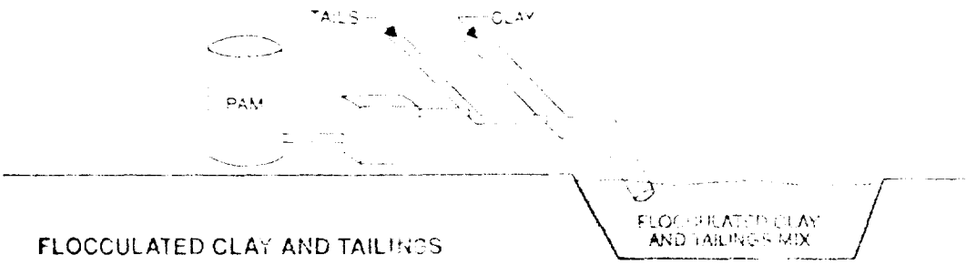

FLOCCULATED CLAY AND TAILINGS

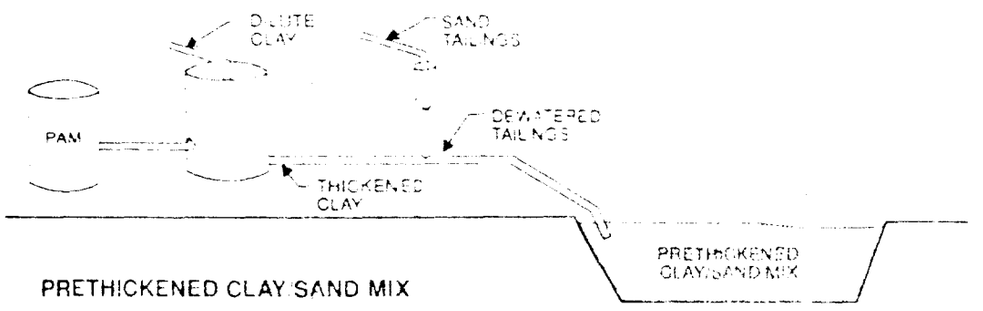

PRETHICKENED CLAY/SAND MIX

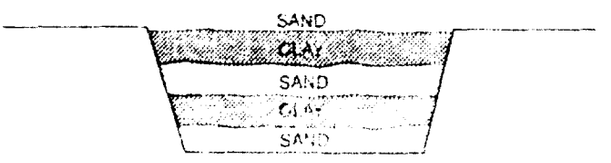

CLAY SANDWICH

Figure 4

CURRENT DEWATERING CONCEPTS

INDUSTRIAL WASTE WATER DISCHARGE PREVENTION
WATER QUALITY IMPROVEMENT AND CONSERVATION PROJECT
Amman, Jordan

HARZA

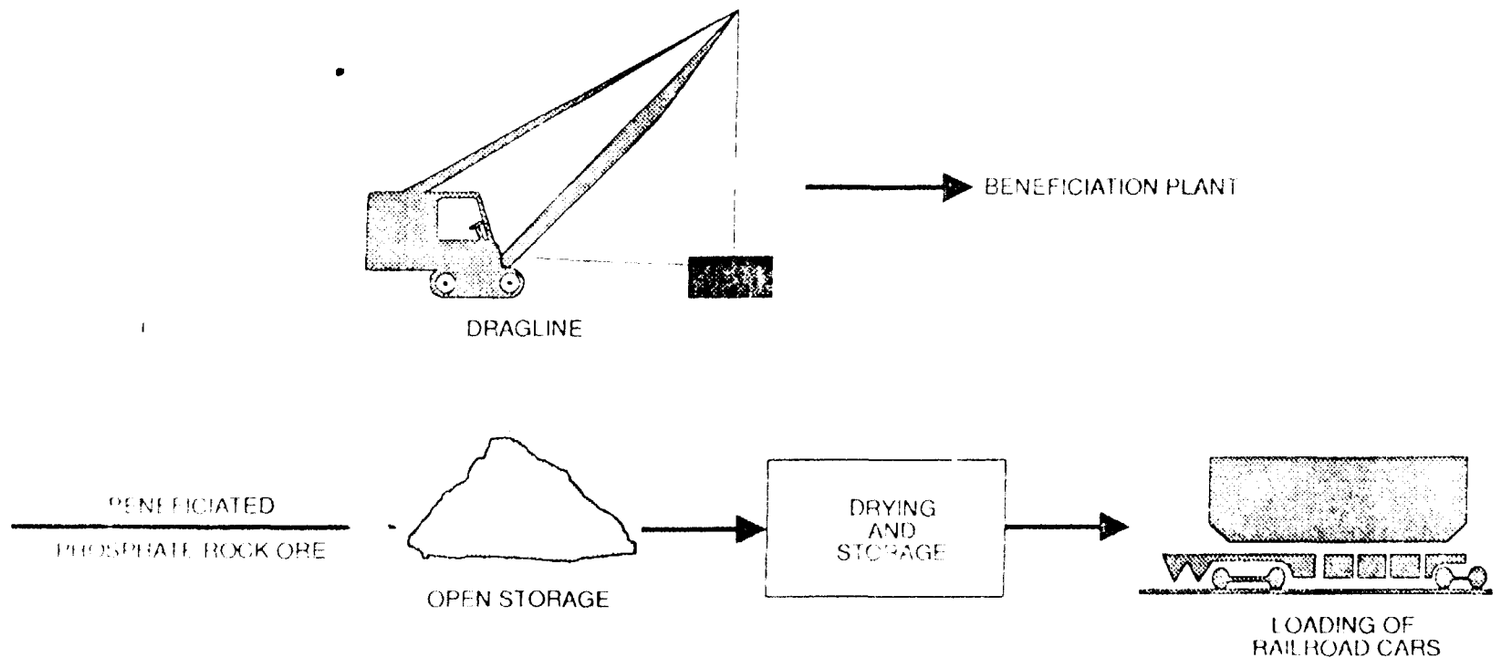

Figure 5

SELECTED PHOSPHATE ROCK EMISSION SOURCES

INDUSTRIAL WASTEWATER DISCHARGE PREVENTION
WATER QUALITY IMPROVEMENT AND CONSERVATION PROJECT
Amman, Jordan

HARZA *Consulting Engineers and Scientists*

Jordan Phosphate Mines

1. Historical Background

Jordan Phosphate Mines Co.Ltd., (JPMC), was founded in 1934 as a private firm to exploit the phosphate reserves at Russeifa area, 15 km north east of Amman, and later on, in 1953, JPMC was incorporated as a public shareholding company jointly owned by the government of Jordan and the private sector. Through 1953-1988 three other production sites were developed in south Jordan, namely Alhasa mine (1962), Alabaid mine (1979) and Eshidiya mine (1988). The current production of JPMC is 7 million tons of various phosphate rock ranging between 66-75% TCP.

The phosphate formations cover about 60% of the total area of Jordan in the formations of the Upper Cartaceous, covering a wide belt in Central Jordan, and lie near the surface. The phosphate deposits at Alhasa and Alabaid are found in two horizons in a lenticular bed whereas at Russeifa and Eshidya mines they occur in continuous beds.

The designed capacities of the three operating mines in million of tons per year are as follows:

Alhassa	:	1.5
Alabaid	:	2.5
Eshidiya	:	[illegible] (as of 1997)
Total	:	[illegible] million tons

Eshidiya mine will be the target of the audit, as the production is expected to be 10 million tons by the year 2000, and production will be concentrated in this mine.

JPMC produces several grades of phosphate rock ranging from 66 to 75% TCP content in addition to the [illegible] grades of [illegible] TCP produced for sale to fertilizer [illegible] by some distributors. [illegible] competition with [illegible] units at Eshidiya [illegible] the future, a [illegible] grade of approximately [illegible]% TCP phosphates will be produced.

2. Type of Mining

Phosphate mining is open pit mining. An overburden layer is removed and dynamite is used for the phosphate [illegible]

4 GEOLOGY & ORE RESERVES.

Geology

Phosphate-bearing horizons occur at varying depths, covering about 60% of the total area of Jordan. The Phosphate formations lie near the surface throughout all the area covered by the Upper Cretaceous in the Maestrichtian Level forming a wide belt about 20,000 square kilometers in extent.

To the east of the country sedimentary rocks of the Eocene, overlying Phosphate formations, cover some 32,000 sq.Km.

The country's three principle Phosphate bearing regions, are Rusaifa, El Hassa/El Abiad and Shidiya areas, which are found in the Belqa series (locally named).

At Rusaifa, the Phosphate bearing horizon has a total thickness of 12-15 metres. It consists of four exploitable Phosphate beds separated by three sterile beds.

The average thickness of Phosphate beds ranges from 1.25-3.00m, with 56-72% Tricalcium Phosphate (TCP) content in the soft Phosphate layers and 45-55% TCP in the hard layers.

The Phosphate at El Hassa and El Abiad areas is found in the same Belqa series, in two horizons, the Upper and the lower. But here the deposits have a lenticular shape which is in contrast to the Rusaifa area, where they come in continuous beds. The Phosphate is found mostly in the upper horizon, in one bed of two layers seperated by a thin band of marl. The thickness of the upper layer ranges between 0.40 and 0.80 meters: it contains 55-62% TCP in the soft Phosphate. The lower layer is from 1.50-2.50m thick, and contains 66-70% TCP in the soft Phosphates.

The Phosphate at Shidiya area is also found in the Belqa series, in two horizons: but in continuous beds. The Phosphate is found mostly in the lower horizon, with a thickness of 8-10m. It comprises three exploitable beds separated by two sterile beds consisting of cherts, silicified limestones, clays and tripoli.

5. PHOSPHATE PRODUCTION

5.1: Mining

The exploitation of phosphate started at Rusaifa mine by manual underground mining, using the room and pillar method. In 1956, semimechanised mining was adopted which was also used at El Hassa mine starting in 1962. Mechanised open cast mining was first applied in 1959 at Rusaifa, where the stripping ratio of overburden to Phosphate is favourable. Since then this method has been in continuous use at Rusaifa. It was introduced in 1966 at El Hassa and in 1979 at El Abiad.

In open cast mining, the overburden is drilled, blasted, and the broken and loosened material is piled and loaded into dumptrucks. The sterile material is transported into waste dump areas less than 1,000 m away.

The uncovered Phosphate bench is usually loosened by ripping, drilled and blasted if necessary, and loaded into dumptrucks for hauling to crushing and screening plants.

an electric walking dragline is used to strip the overburden. This dragline, the first in the Middle East, has a 95.6m boom and a 30.6 cu.m. bucket, was constructed, commissioned and has been put into operation since February 1981, with a capacity of about 25,000 cu.m per day. Drilling of the overburden is done with two electric rigs.

5.2: Ore Processing

5.2.1 Crushing & Screening: Raw Phosphate from the mine sites is hauled to jaw or impact crushers, rated at 250-450 tons per hour. All material is fed to the crushing and screening plants, where the oversize material of more than $\frac{1}{2}$'' material is rejected and stockpiled for further treatment in the future. The minus $\frac{1}{2}$'' material is either fed to the dryers or to the beneficiation plants.

2.2 Beneficiation and Drying: Phosphate from the crushing and screening plants which ontain 66-68% TCP and 70-72% TCP from Rusafia Mine or 70-72% TCP form both Hassa and El Abiad Mines, are fed directly to rotary cascading dryers operated with heavy el oil, to produce dry products which contain 1-3% moisture unbeneficiated grade osphate. Phosphate ores which contain 60-62% TCP at Rusafia or 66-68% TCP at Hassa and El Abiad are fed to benefication plants for upgrading.

In the beneficiation plants, Phosphate is fed to slurrifiers, log washers and wet screens to ject the 4mm (or + 6mm) oversize. Two or three stages of agitation are followed by ydrocycloning, where the underflow of + 270 mesh products are fed to pusher centrifuge ters to produce phosphatic cakes which contain 16-18% moisture. The overflow of the ydrocyclones are rejected as slimes which contain poor Phosphates with impurities of silica, rbonates and clayey materials. The Phosphate cakes are fed to heavy fuel oil-fired dryers to oduce beneficiated grades of 66-68% TCP at Rusaifa and 73-75% TCP at El Hassa and El biad.

Fine phosphates from dryers seperated by the electrostatic precipitator at Rusaifa Mine are llected and bagged in 50 Kgs bags and named JORPHOS which is sold for direct application acidic soils. It contains 29.3-30.2% P_2O_5 and its granulation is 80% minus 100 mesh size ich contains 30% minus 200 mesh.

6. PHOSPHATE EXPORT FACILITIES AT AQABA

All Phosphates to be exported are transported from the three mines to Aqaba port. Rock Phosphates from Rusaifa Mine are transported exclusively by trucks. Deliveries from both El Hassa and El Abiad Mines are mostly made by the railway and partially by trucks. Deliveries by the rail way from El Hassa Mine started in 1976 and from El Abiad Mine started in 1981.

Aqaba has been developed into a modern port capable of receiving 60,000-ton bulk carriers, and can easily be expanded to receive 100,000-ton bulk carriers.

Berth A, the first of two phosphate loading berths, has been in operation since 1960. It is 210 metres long and can handle vessels up to 15,000 dwt. with a maximum draught of 30 feet and a width of up to 54 ft. Berth A has two 20,000-ton covered stores. They are equipped with two truck intakes and completely mechanised handling systems for storing phosphates and evacuating it to a ship loader. During 1985 the shiploader and the main belt conveyor were replaced by bigger capacities of 1000 t/h, and will be commissioned in the beginning of 1986 where then Berth A alone can handle up to 1.5 million tons of phosphate per year.

Berth B, commissioned in 1969 and expanded in 1978, is 130 metres long it can handle vessels up to 60,000 dwt. with a maximum draught of 55 ft. and a width of up to 50 metres. Berth B has four covered stores totalling 300,000 tons in capacity, with three truck intakes and two rail intakes. The stores are also equipped with completely mechanised handling systems, and two 2,100 t/h shiploaders. Berth B alone can handle up to 4.5 million tpy of Phosphate.

UTILIZATION OF JORDAN PHOSPHATE ROCK IN THE CHEMICAL INDUSTRY.

Jordan phosophate rock is soft, porous and friable rock of marine sedimentary origin. Upgrading of phosphate rock is done by wet beneficiation to get high grade products low in impurities.

Only small quantities of the raw phosphate rock in the form of fine phosphate is used for direct application in acidic soils, while most of the phosphate rock is necessary to be processed chemically in order to change it into more soluble fertilizer products. Jordan phosphate rock is used to produce phosphoric acid which is the basic intermediary material in the production of high analysis fertilizers such as; Triple super phosphate (T.S.P) Monammonium phosphate (M.A.P), Diammonium phosphate (D.A.P) and other complex fertilizers (N.P.K). Also this acid is used for the production of nonfertilizer material as S.T.P.P, which is a basic ingredient in the detergent industry, it is also used in the production of single super phosphate (SSP) as well as in the direct production of Nitrophosphate with nitric acid attack.

Technical aspects described here are based on actual plant experience in several countries.

1 - Phosphoric acid production

Phosphoric acid is generally produced by reacting the raw phosphate rock with sulphuric acid. Jordan Phosphate, mostly El Hassa, and El-Abiad 72-74% and 73-75% TCP and the Rusaifa 66-68% TCP and 70-72% TCP are used for phosphoric acid production by a variety of processes.

- Norsk Hydro (Fisons) Process is used in Yuogoslavia
- PRAYON Process is used in India and Greece

- RHONE Poulenc Process is used in Jordan, France, Greece, Yugoslavia, Austria
- NISSAN Process is used in India, Japan, Bangladesh, Australia, Turkey and Indonesia.
- SIAPE Process is used in Turkey.

The 73-75% grade is also used for phosphoric acid production in Romania and Bulgaria

Due to the very soft nature of apatite minerals in Jordan rock, the grindability is high which reduces power consumption.

Reactivity is also very high. The percentage of P_2O_5 loss as unattacked rock in the reaction system is low, and the byproduct gypsum is of high quality with minimum impurities.

Sulphuric acid consumption is moderate, about 2.7 tons per ton of P_2O_5 produced.

Filtration of gypsum from acid slurry is about 6.0 metric tons P_2O_5 per day per square metre of the filter area. Filtration efficiency exceeds 98% thus ensuring high P_2O_5 recovery in the plant.

Low chlorine content (200-400 ppm) and an optimum fluorine to silica ratio mean minimum corrosion.

Low R_2O_3 (oxides of iron and aluminium) means minimum loss on neutralization and minimum sludge formation on standing and transport of both the dilute and the concentrated acids.

2. Super phosphates

Single super phosphate (SSP) is made simply by reacting the phosphate rock with sulphuric acid and the product contains 18-22% P_2O_5. While the triple super phosphate (TSP) is made by reacting the phosphate rock with phosphoric acid and the product contains 46-48% P_2O_5.

The Jordan phosphate rock is highly reactive and thus requires minimum curing time in single super phosphate as well as in the triple super phosphate production. In triple super phosphate the phosphate rock can be reacted with low acid temperatures and low acid concentration without serious effect on yield or product properties.

3. Monammonium phosphate (MAP) and Diammonium phosphate (DAP).

These products are made by reacting ammonia with phosphoric acid in different ratios

MAP grade is 12:62:0 and the DAP grade is 18:48:0

Other Ammonium phosphate products from Jordan phosphate rock are the.

Nitro phosphate 20:20:0 and the Urea ammonium phosphate 28:28:0

APPENDIX E

APPLICABLE WATER QUALITY CRITERIA

APPLICABLE REGULATORY CRITERIA

Current Status of Environmental Regulations in Jordan:

In order to assess the Arab Potash Company (APC) compliance with applicable Jordanian standards and regulations, it is of importance at this stage to present an overview of Jordan's environmental protection control laws, standards, and regulations. Interestingly, Jordan has no comprehensive law to control water, air, and soil pollution. However, a Jordanian Environment Act (JEA) was drafted two years ago to achieve the principle objectives mentioned in the National Environment Strategy (NES) for Jordan. JEA is currently awaiting approval from the Parliament.

In general, the nature of water pollution standards and regulations in Jordan vary according to sources. Industrial wastewater discharges are regulated by the Jordanian standard specification number 202 (Table E-1) adopted in 1981 by the Department of Standards and Specifications (DSS) and revised in 1990. Standard 202 regulates industrial wastewater discharges to rivers, wadis, groundwater, the sea, and reuse for irrigation. This standard covers 37 pollutant parameters and sets maximum allowable concentration limits of pollutants in the discharged industrial wastewater effluents. Moreover, the standard also contains narrative conditions to protect public health, aquatic life, worker health; and groundwater quality. The standard is not associated with a permitting mechanism and therefore is self-implementing.

Drinking water quality is regulated by the Jordanian standard number 286. Tables E-2a - E-2e present quantitative requirements of pertinent characteristics including physical, chemical , radiation , and health related issues. With regards to regulations related to the quality of treated domestic wastewater to be reused in irrigation, Jordan has neither standards nor guidelines. However, it is a common practice to use the Food and Agriculture Organization (FAO) and World Health Organization (WHO) Guidelines as a reference .Tables E-3 through E-5 are related to the quality of treated domestic wastewater effluents to be reused in irrigating agricultural crops. The remaining tables E-6 - E-12 present the tolerance and sensitivity of crops to salinity and other specific ions like Sodium, Boron and Chloride. These are adapted from the FAO Guidelines (1985). Treated domestic wastewater is regulated by the Jordanian Standard 893 (Table E-13) adopted in 1994 by DSS. Regarding air pollution, Jordan does not have any existing standards or regulations to control air pollution.

Regulations Applicable to the APC Discharges:

During the course of conducting an environmental pollution prevention waste minimization audit of the APC, the audit team identified three continually discharged effluents. Two of these discharges are industrial wastewater effluents disposed in the Dead Sea and the Truce Line Flood Channel

These effluents correspond to wastewaters produced from the intake pumps packings and line flushing and wastewater generated through facility drains, washings, and overflows.

The third wastewater discharge, however, originates from the Potash Township wastewater treatment plant effluent. This effluent is discharged into an unnamed neighboring wadi. The Township administration has no monitoring program instituted and therefore no analyses were performed on the effluent since start-up. The sludge produced in the treatment facility is being hauled and buried in the lisan area near The Dead Sea. Sludge generated during the course of municipal or industrial wastewater treatment has no detailed standards regulating its disposal.

Pertinent Jordanian standards regulating disposition into the Flood Channel and the Dead Sea are governed by the Jordanian standard 202 discussed before. However, it is worth noting that the most relevant parameter in this case (disposition into the Sea) is the total dissolved solids (TDS). TDS is not defined by the Jordanian standard 202. Similarly regulations to control and prevent illicit disposal to storm sewers, underground injection, or marine dumping do not exist.

It is highly recommended that APC institutes a monitoring program in order to test for the quality of their wastewater effluents. This action, if adopted, will enable APC to be prepared when the new JEA will be passed.

Table E-1

Summary of requirements of Jordan Standard 202/1991 for disposal of industrial effluents.

Parameter	Maximum Allowable Limit, (mg/l)+			
	Disposal To			
	Wadis & Rivers	Sea	Groundwater Recharge	Reuse for Irrigation**
BOD5	50M	-	50M	-
COD	150M	200	150M	-
DO	1*	5*	1*	1*
TDS	3000(1)	-	1500 (1)	2000 (2)
TSS	50	-	-	100 (3)
pH (su)	6.5-9.0	5.5-9.0	6.5-9.0	6.5-8.4
Color (unit)	15	75	15	-
TC	-	4	-	-
FOG	5	10	Absent	5
Phenol	0.002	1	0.002	0.002
MBAS	25		15	-
NO3-N	12 (4)	-	12 (4)	30
NH3	5	12	5	5
T-N	-	125	-	50
PO4-P	15	-	-	-
Cl	500	-	500	350 (3)
SO4	500	-	500	200
F	1.5	-	1.5	-
HCO3	-	-	-	500
Na	-	-	400	-
Mg	-	-	-	-
Ca	-	-	-	-
SAR	-	-	-	9
Al	5	-	0.3	5
As	0.05	0.1	0.05	0.1
B	1	-	1	1 (5)
Cr	0.1	0.3	0.05	0.1
Cu	2	0.1	2	0.2
Fe	1	2	1	5
Mn	0.2	0.2	0.2	0.2
Ni	0.2	0.02	0.1	0.2
Pb	0.1	0.1	0.1	1
Se	0.02	0.02	0.05	0.02
Cd	0.01	0.07	0.02	0.01
Zn	15	-	15	2
CN	0.1	1	0.1	0.1
Hg	0.001	0.001	0.001	0.001
TCC MPN/100ml		5000	-	-
TFCC MPN/100ml	1000(6)	-	1000 (6)	1000 (6)
Nematodes	< 1	-	-	< 1

(+) All units are in mg/l except where noted
(*) Minimum value
(**) Depends upon, type and quantity of crops, irrigation methods, soil type, climate & groundwater in the area concerned
(-) Undetermined.
M) Monthly average

Notes:

1. TDS allowable limit is subject to the TDS [illegible]
2. Allowable limits of wastewater reuse determine the degree of treatment [illegible]
3. Method of irrigation has determined [illegible]
4. Nitrate concentrations allowed are related mainly to [illegible] in the affected water bodies.
5. Could reach 3 mg/l
6. Geometric mean

Table E-2a
Jordanian Drinking Water Standards
A: Physical characterstics

Parameter	Permissible Limit	Max. allowable conc. in case no better source is available
Taste	aesthetically acceptable	-
Odor	aesthetically acceptable	-
Color	10 units	15 units
Turbidity	1 unit (JCU)	5 units
pH	$6.5 < pH < 9$	-
Temperature	8 - 25 c	-

Table E-2b

Jordanian Drinking Water Standards

B: Chemical Charecterstics

Parameter	Max. Allowable Conc. mg/l
Pb	0.05
Se	0.01
As	0.05
Cr	0.05
CN	0.1
Cd	0.005
Hg	0.001
Sb	0.01
Ag	0.01

Table E-2c
Jordanian Drinking Water Standards
C: Health related

Parameter	Permissible Limit mg/l	Max. allowable conc. in case no better source is avialable	Effects within max. allowable limits
TDS	500	1500	aesthetic
TH(CaCO3)	100	500	aesthetic
ABS	0.5	1	indicator
Al	0.2	0.3	aesthetic
Fe	0.3	1	aesthetic
Mn	0.1	0.2	aesthetic
Cu	1	1.5	aesthetic
Zn	5	15	aesthetic
Na	200	400	aesthetic
Ni	0.05	0.1	health
Cl	200	500	aesthetic
F	1	1.5	health
SO4	200	500	aesthetic
NO3	45	70	health

Table E-2d

Jordanian Drinking Water Standards
D: Radiation

Parameter	Maximum limit Bq l
Alpha-emitters (except for Radon)	0.1
Beta-emitters	1

Table E-2e

Jordanian Drinking Water Standards
E: Organic pollutants*

Parameter	Max. Permissible Conc. mg/l
A) Chlorinted Hydrocarbons	
Endrin	0.0002
Lindane	0.0004
Methoxychlor	0.1
Toxaphene	0.005
B) Chlorophenoxys	
2,4-D	0.1
2,4,5-TP (Trichlorophenoxy propionic acid)	0.01

* Other organic pollutants should not exceed the max. allowable limits set by WHO.

Table E-3

Guidelines for interpretations of water quality for irrigation (1)

Potential irrigation problems	Units	Degree of restriction on use: None	Slight to moderate	Severe
Salinity (affects crop water availability, (2))				
EC_w (or)	dS/m	< 0.7	0.7 - 3.0	> 3.0
TDS	mg/l	< 450	450 - 2000	> 2000
Infiltration (affects infiltration rate of water into the soil. Evaluate using EC_w and SAR together (3))				
SAR = 0-3 and EC_w =		> 0.7	0.7 - 0.2	< 0.2
= 3-6 =		> 1.2	1.2 - 0.3	< 0.3
= 6-12 =		> 1.9	1.9 - 0.5	< 0.5
= 12-20 =		> 2.9	2.9 - 1.3	< 1.3
= 20-40 =		> 5.0	5.0 - 2.9	< 2.9
Specific ion toxicity (affects sensitive crops)				
Sodium (Na) (4)				
Surface irrigation	SAR	< 3	3 - 9	> 9
Sprinkler irrigation	me/l	< 3	> 3	
Chloride (Cl) (4)				
Surface irrigation	me/l	< 4	4 - 10	> 10
Sprinkler irrigation	me/l	< 3	> 3	
Boron (B) (5)	mg/l	< 0.7	0.7 - 3.0	> 3.0
Trace elements (see Table E4)				
Miscellaneous effects (affects susceptible crops)				
Nitrogen (NO3-N) (6)	mg/l	< 5	5 - 30	> 30
Bicarbonate (HCO3) (Overhead sprinkling only)	me/l	< 1.5	1.5 - 8.5	> 8.5
pH			Normal range 6.5 - 8.4	

(1) Adapted from University of California Committee of Consultants, 1974.

(2) EC_w means electrical conductivity, a measure of the water salinity, reported in deci Siemens per metre at 25°C (dS/m) or in units millimhos per centimeter (mmho/cm). Both are equivalent. TDS means total dissolved solids, reported in milligrams per liter (mg/L).

(3) SAR means sodium adsorption ratio. SAR is sometimes reported by the symbol, RNa. At a given SAR, infiltration rate increases as water salinity increases. Evaluate the potential infiltration problem by SAR as modified by EC_w.

(4) For surface irrigation, most tree crops and woody plants are sensitive to sodium and chloride, use the values shown. Most annual crops are not sensitive. With overhead sprinkle irrigation and low humidity (<30 percent), sodium and chloride may be absorbed through the leaves of sensitive crops.

(5) For boron tolerances, see Tables E6 and E7.

(6) NO3-N means nitrate nitrogen reported in terms of elemental nitrogen. NH4-N and Organic N should be included when wastewater is being tested.

Assumptions in the Guidelines

The water quality guidelines in Table E-3 are intended to cover the wide range of conditions encountered in irrigated agriculture. Several basic assumptions have been used to define their range of usability. If the water is used under greatly different conditions, the guidelines may need to be adjusted. Wide deviations from the assumptions might result in wrong judgements on the usability of a particular water supply, especially if it is a marginal case. Where sufficient experience, field trials, research or observations are available, the guidelines may be modified to fit local conditions more closely.

The basic assumptions in the guidelines are:

Yield Potential: Full production capability of all crops, without the use of special practices, is assumed when the guidelines indicate no restrictions on use. A "restriction on use" indicates that there many be a limitation in choice of crop, or special management may be needed to maintain full production capability. A "restriction on use" does not indicate that the water is unsuitable for use.

Site Conditions: Soil texture ranges from sandy loam to clay loam with good internal drainage. The climate is semi-arid to arid and rainfall is low. Rainfall does not play a significant role in meeting crop water demand or leaching requirement. (In a monsoon climate or areas where precipitation is high for part or all of the year, the guideline restrictions are too severe. Under the higher rainfall situations, infiltrated water from rainfall is effective in meeting all or part of the leaching requirement.) Drainage is assumed to be good, with no uncontrolled shallow water table present within 2 metres of the surface.

Methods and Timing of Irrigations: Normal surface or sprinkler irrigation methods are used. Water is applied infrequently as needed, and the crop utilizes a considerable portion of the available stored soil-water (50 percent or more) before the next irrigation. As a rule, 15 percent of the applied water percolates below the root zone (leaching fraction (LF) = 15 percent). The guidelines are too restrictive for specialized irrigation methods, such as localized drip irrigation, which results in near daily or frequent irrigations, but are applicable for subsurface irrigation or surface applied leaching satisfies the leaching requirements.

Water Uptake by Crops: Different crops have different water uptake patterns, but all take water from wherever it is most readily available within the rooting depth. On average about 40 percent is assumed to be taken from the upper quarter of the rooting depth, 30 percent from the third quarter, 20 percent from the lower quarter, each irrigation reaches the upper root zone and maintains it at field capacity. The salinity increases with depth and is greatest in the lower part of the root zone. The average salinity of the soil water is three times that of the applied water and is representative of the average root zone salinity to which the crop responds. These conditions result from a leaching fraction of 15-20 percent and irrigations that are timed to keep the soil adequately watered at all times.

Salts leached from the upper root zone accumulate in some extent in the lower part, but salts which are moved below the root zone by sufficient leaching. The higher salinity in the lower root zone becomes less significant as adequate moisture is maintained in the zone, so that as much of the root zone and using enough leaching is accomplished.

Restriction on Use: The "Restriction on Use" shown in Table E-3 is divided into three degrees, namely, slight to moderate and severe. The divisions are somewhat arbitrary since change occurs gradually and there is no clear cut breaking point. A change in the "Restriction on Use" from one to the next may be a guide that the value has the significant effect when considered in proper perspective with other factors affecting yield. Field trials, research trials and observations have led to these divisions, but in actual practice, if the water user and other them. Values shown are applicable under normal field conditions prevailing in most irrigated areas in the arid and semi-arid regions of the world.

Table E-4
Recommended maximum concentrations of trace elements in irrigation water (1)

Element	Recommended maximum concentration(2) (mg/L)	Remarks
Al (aluminium)	5.0	Can cause non-productivity in acid soils (pH < 5.5), but more alkaline soils at pH > 7.0 will precipitate the ion and eliminate any toxicity.
As (arsenic)	0.10	Toxicity to plants varies widely, ranging from 12 mg/L for Sudan grass to less than 0.05 mg/L for rice.
Be (beryllium)	0.10	Toxicity to plants varies widely, ranging from 5 mg/L for kale to 0.5 mg/L for bush beans.
Cd (cadmium)	0.01	Toxic to beans, beets and turnips at concentrations as low as 0.1 mg/L in nutrient solutions. Conservative limits recommended due to its potential for accumulation in plants and soils to concentrations that may be harmful to humans.
Co (cobalt)	0.05	Toxic to tomato plants at 0.1 mg/L in nutrient solution. Tends to be inactivated by neutral and alkaline soils.
Cr (chromium)	0.10	Not generally recognized as an essential growth element. Conservative limits recommended due to lack of knowledge on its toxicity to plants.
Cu (copper)	0.20	Toxic to a number of plants at 0.1-1.0 mg/L in nutrient solutions.
F (fluoride)	1.0	Inactivated by neutral and alkaline soils.
Fe (iron)	5.0	Not toxic to plants in aerated soils, but can contribute to soil acidification and loss of availability of essential phosphorus and molybdenum. Overhead sprinkling may result in unsightly deposits on plants, equipment and buildings.
Li (lithium)	2.5	Tolerated by most crops to 5 mg/L, mobile in soil. Toxic to citrus at low concentrations (<0.075 mg/L). Acts similarly to boron.
Mn (manganese)	0.20	Toxic to a number of crops at a few-tenths to a few mg/L, but usually only in acid soils.
Mo (molybdenum)	0.01	Not toxic to plants at normal concentrations in soil and water. Can be toxic to livestock if forage is grown in soils with high concentrations of available molybdenum.
Ni (nickel)	0.20	Toxic to a number of plants at 0.5-1.0 mg/L; reduced toxicity at neutral or alkaline pH.
Pb (lead)	5.0	Can inhibit plant cell growth at very high concentrations.
Se (selenium)	0.02	Toxic to plants at concentrations as low as 0.025 mg/L and toxic to livestock if forage is grown in soils with relatively high levels of added selenium. An essential element to animals but in very low concentrations.
Sn (tin)		
Ti (titanium)		Effectively excluded by plants; specific tolerance unknown.
W (tungsten)	•	
V (vanadium)	0.1	Toxic to many plants at relatively low concentrations.
Zn (zinc)	2.0	Toxic to many plants at widely varying concentrations; reduced toxicity at pH > 6.0 and in fine textured or organic soils.

1. Adapted from National Academy of Sciences (1972) and Pratt (1972).
2. The maximum concentration is based on a water application rate which is consistent with good irrigation practice (10 cm or more per year). If the water application rate greatly exceeds this, the maximum concentration should be reduced proportionally. No adjustment should be made for application rates less than 10 cm per year. The concentration in water should be on a continuous basis at most.

Source: FAO Guidelines [illegible]

Table E-5

Recommended microbiological quality guidelines for wastewater use in agriculture (a)

Category	Reuse conditions	Exposed group	Intestinal nematodes (b) (arithmetic mean no. of eggs per litre (c))	Faecal coliforms (geometric mean no. per 100ml) (c)	Wastewater treatment expected to achieve the required microbiological quality
A	Irrigation of crops likely to be eaten uncooked, sports fields, public parks, (d)	Workers, Consumer, public	< 1	< 1000 (d)	A series of stabilization ponds designed to achieve the microbiological quality indicated, or equivalent treatment
B	Irrigation of cereal crops, industrial crops, fodder crops, Pasture and trees (e)	Workers	< 1	No standard recommended	Retention in stabilization ponds for 8-10 days or equivalent helminth and faecal coliform removal
C	Localized irrigation of crops in category B if exposure of workers and the public does not occur	None	Not applicable	Not applicable	Pretreatment as required by the irrigation technology, but not less than primary sedimentation.

(a) In specific cases, local epidemiological, sociocultural and environmental factors should be taken into account and the guidelines modified accordingly

(b) Ascaris and Trichuris species and hookworms

(c) During the irrigation period.

(d) A more stringent guideline (< 200 faecal coliforms per 100 ml) is appropriate for public lawns, such as hotel lawns With which the public may come into direct contact

(e) In the case of fruit trees, irrigation should cease two weeks before fruit is picked, and no fruit should be picked off the ground Sprinkler irrigation should not be used

Source Scientific group on health aspects of use of treated wastewater for agricultural and aquiculture WHO Geneva 18-23 Nov 1987

Table E-6

Chloride tolerance of some fruit crop cultivars and rootstocks.(a)

Crop	Rootstock or cultivar	Maximum permissible Cl in water without leaf injury (b),(c) (mg/L)
	Rootstocks	
Avocado (Persea americana)	West indian	180
	Guatemalan	145
	Mexican	110
Citrus (Citrus spp.)	Sunki mandarin, grapefruit	
	Cleopatra mandarin, Rangpur lime	600
	Sampson tangelo, rough lemon, sour orange, Ponkan mandarin	355
	Citramelo 4475, trifoliate orange, Cuban shaddock, Calamondin, Sweet orange, Savage citrange, Rusk citrange, Troyer citrange	250
Grape (Vitis spp.)	Salt Creek, 1613-3	560
	Dog ridge	710
Stone fruit (Prunus spp.)	Marianna	600
	Lovell, Shalil	250
	Yunnan	180
	Cultivars	
Berries (Rubus spp.)	Boysenberry	250
	Olallie blackberry	250
	Indian Summer raspberry	110
Grape (vitis spp.)	Thompson seedless, Perlette	460
	Cardinal, black rose	250
Strawberry (Fragaria spp.)	Lassen	180
	Shasta	110

(a) Data are adapted from Haas (13)

(b) For some crops, the concentrations given may exceed the overall salinity tolerance of that crop and cause some yield reducuon before chloride ion toxicities. Values given are for the maximum concentration in the irrigation water. The values were derived from saturation extract data (ECe) by the following relationship: saturation extraction concentration = 1.5 water concentration

(c) The maximum permissible values apply only to surface irrigated crops. Sprinkler irrigation may cause excessive leaf burn at values far below these. (see Table 3-10)

Source: FAO Guidelines. R.S. Ayers & D.W. Westcot (1985).

Table E-7

GUIDLINES FOR INTERPRETING LABORATORY DATA ON WATER SUITABILITY FOR GRAPES

Potential Irrigation Problem	Units	Degree of Restriction on Use: None	Slight to Moderate	Severe[2]
Salinity[3] *(affects water availability to crops)*				
EC_w	dS/m	< 1	1.0 - 2.7	> 2.7
Toxicity *(Specific ions which affect growth of crop)*				
Sodium (Na^+)[4]	me/l	< 20	-	-
Chloride (Cl^-)[4]	me/l	< 4	4 - 15	> 15
Boron (B)	mg/l	< 1	1 - 3	> 3
Miscellaneous				
Bicarbonate (HCO_3^-)[5]	me/l	< 1.5	1.5 - 7.5	> 7.5
Nitrate-nitrogen (NO_3-N)	mg/l	< 5	5 - 30	> 30

1. Adapted from Neja et al. 1978.
2. Special management practices and favorable soil conditions are required for successful production.
3. Assumes that rainfall and extra water applied owing to inefficiencies of normal irrigation will supply the crop need plus about 15 percent extra for salinity control
4. With overhead sprinkler irrigation, sodium or chloride in excess of 3 me/l under extreme drying conditions may result in excessive leaf absorption, leaf burn and crop damage. If overhead sprinklers are used for cooling by frequent on-off cycling, damage may occur even at lower concentrations.
5. Bicarbonate (HCO_3) in water applied by overhead sprinklers may cause white deposits on fruit and leaves which reduces market acceptability, but is not toxic to the plant.

Table E-8

RELATIVE SALT TOLERANCE OF VARIOUS CROPS AT GERMINATION[1]

Crop		50 percent Emergence reduction (ECe in dS/m)
Barley	*(Hordeum vulgare)*	16 - 24
Cotton	*(Gossypium hirsutum)*	15.5
Sugarbeet	*(Beta vulgaris)*	6 - 12.5
Sorghum	*(Sorghum bicolor)*	13
Safflower	*(Carthamus tinctorius)*	12.3
Wheat	*(Triticum aestivum)*	14 - 16
Beet, red	*(Beta vulgaris)*	13.8
Alfalfa	*(Medicago sativa)*	8.2 - 13.4
Tomato	*(Lycopersicon Lycopersicum)*	7.6
Rice	*(Oryza sativa)*	18
Cabbage	*(Brassica oleracea capitata)*	18
Muskmelon	*(Cucumis melo)*	10.4
Maize	*(Zea mays)*	21 - 24
Lettuce	*(Lactuca sativa)*	13.4
Onion	*(Allium cepa)*	5.6 - 7.5
Bean	*(Phaseolus vulgaris)*	8.0

Table E-9

Relative boron tolerance of agricultural crops (1), (2)

Very Sensitive (<0.5 mg/L)

Lemon	*Citrus Limon*
Blackberry	*Rubus spp.*

Sensitive (0.5-0.75 mg/L)

Avocado	*Persea americana*
Grapefruit	*Citrus X paradisi*
Orange	*Citrus sinensis*
Apricot	*Prunus armeniaca*
Peach	*Prunus persica*
Cherry	*Prunus avium*
Plum	*Prunus domestica*
Persimmon	*Diospyros Kaki*
Fig, Kadota	*Ficus carica*
Grape	*Vitis vinifera*
Walnut	*Juglans regia*
Pecan	*Carya illinoiensis*
Cowpea	*Vigna unguiculata*
Onion	*Allium cepa*

Sensitive (0.75-1.0 mg/L)

Garlic	*Allium sativum*
Sweet potato	*Ipomoea batatas*
Wheat	*Triticum eastivum*
Barley	*Hordeum vulgare*
Sunflower	*Helianthus anriatus*
Bean, mung	*Vigna radiata*
Sesame	*Sesamum indicum*
Lupine	*Lupinus hartwegii*
Strawberry	*Fragaria spp.*
Artichoke, Jerusalem	*Helianthus tuberosus*
Bean, Kidney	*Phaseolus vulgaris*
Bean, lima	*Phaseolus lunatus*
Groundnut/Peanut	*Arachis hypogaea*

Moderately Sensitive (1.0-2.0 mg/L)

Pepper, red	*Capsicum crucum*
Pea	*Pisum sativa*
Carrot	*Daucus carota*
Radish	*Raphanus sativus*
Potato	*Solanum tuberosum*
Cucumber	*Cucumis sativus*

Moderately Tolerant (2.0-4.0 mg/L)

Lettuce	*Lactuca sativa*
Cabbage	*Brassica oleracea capitata*
Celery	*Apium graveolens*
Turnip	*Brassica rapa*
Bluegrass, Kentucky	*Poa pratensis*
Oats	*Avena sativa*
Maize	*Zea mays*
Artichoke	*Cynara scolymus*
Tobacco	*Nicotiana tabacum*
Mustard	*Brassica juncea*
Clover, sweet	*Melilotus indica*
Squash	*Cucurbita pepo*
Muskmelon	*Cucumis melo*

Tolerant (4.0-6.0 mg/L)

Sorghum	*Sorghum bicolor*
Tomato	*Lycopersicon Lycopersicum*
Alfalfa	*Medicago sativa*
Vetch, purple	*Vicia benghalensis*
Parsley	*Petroselinum crispum*
Beet, red	*Beta vulgaris*
Sugarbeet	*Beta vulgaris*

Very Tolerant (6.0-15.0 mg/L)

Cotton	*Gossypium hirsutum*
Asparagus	*Asparagus officinalis*

(1) Data taken from Maas (1984)

(2) Maximum concentrations tolerated in soil-water without yield or vegetative growth reductions. Boron tolerance vary depending upon climate, soil conditions and crop varieties. Maximum concentrations in the irrigation water are approximately equal to these values or slightly less.

Source: FAO Guidelines, R.S. Ayers & D.W. Westcot (1985)

Table E-10

Relative tolerance of selected crops to exchangeable sodium (1).

Sensitive (2)	Semi-tolerant (2)	Tolerant (2)
Avocado	Carrot	Alfalfa
(*Persea americana*)	(*Daucus carota*)	(*Medicago sativa*)
Deciduous Fruits	Clover, Ladino	Barley
Nuts	(*Trifolium repens*)	(*Hordeum vulgare*)
Bean, green	Dallisgrass	Beet, garden
(*Phaseolus vulgaris*)	(*Paspalum dilatatum*)	(*Beta vulgaris*)
Cotton (at germination)	Fescue, tall	Beet, sugar
(*Gossypium hirsutum*)	(*Festuca arundinacea*)	(*Beta vulgaris*)
Maize	Lettuce	Bermuda grass
(*Zea mays*)	(*Lactuca sativa*)	(*Cynodon dactylon*)
Peas	Banana	Cotton
(*Pisum sativum*)	(*Pennisetum typhoides*)	(*Gossypium hirsutum*)
Grapefruit	Sugarcane	Paragrass
(*Citrus paradisi*)	(*Saccharum officinarum*)	(*Brachiaria mutica*)
Orange	Berseem	Rhodes grass
(*Citrus sinensis*)	(*Trifolium alexandrinum*)	(*Chloris gayana*)
Peach	Bersim	Wheatgrass, crested
(*Prunus persica*)	(*Melilotus parviflora*)	(*Agropyron cristatum*)
Tangerine	Raya	Wheatgrass, fairway
(*Citrus reticulata*)	(*Brassica juncea*)	(*Agropyron cristatum*)
Mung	Oat	Wheatgrass, fairway tall
(*Phaseolus aurus*)	(*Avena sativa*)	(*Agropyron elongatum*)
Mash	Onion	Karnal grass
(*Phaseolus mungo*)	(*Allium cepa*)	(*Diplachne fusca*)
Lentil	Radish	
(*Lens culinaris*)	(*Raphanus sativus*)	
Groundnut (peanut)	Rice	
(*Arachis hypogaea*)	(*Oryza sativus*)	
Cram	Rye	
(*Cicer arietinum*)	(*Secale cereale*)	
Cowpeas	Ryegrass, Italian	
(*Vigna sinensis*)	(*Lolium multiflorum*)	
	Sorghum	
	(*Sorghum vulgare*)	
	Spinach	
	(*Spinacia oleracea*)	
	Tomato	
	(*Lycopersicon esculentum*)	
	Vetch	
	(*Vicia sativa*)	
	Wheat	
	(*Triticum vulgare*)	

Adapted from data of FAO-Unesco (1973), Pearson (1960), and Abrol (1982).
Source: FAO Guidelines, R.S. Ayers & D.W. Westcot (1985)

Table E-11

LABORATORY DETERMINATIONS NEEDED TO EVALUATE COMMON IRRIGATION WATER QUALITY PROBLEMS

Water parameter	Symbol	Unit[1]	Usual range in irrigation water	
SALINITY				
Salt Content				
Electrical Conductivity	EC_w	dS/m	0 - 3	dS/m
(or)				
Total Dissolved Solids	TDS	mg/l	0 - 2000	mg/l
Cations and Anions				
Calcium	Ca^{++}	me/l	0 - 20	me/l
Magnesium	Mg^{++}	me/l	0 - 5	me/l
Sodium	Na^{+}	me/l	0 - 40	me/l
Carbonate	CO_3^{--}	me/l	0 - 1	me/l
Bicarbonate	HCO_3^{-}	me/l	0 - 10	me/l
Chloride	Cl^{-}	me/l	0 - 30	me/l
Sulphate	SO_4^{--}	me/l	0 - 20	me/l
NUTRIENTS[2]				
Nitrate - Nitrogen	NO_3 - N	mg/l	0 - 10	mg/l
Ammonium - Nitrogen	NH_4 - N	mg/l	0 - 5	mg/l
Phosphate - Phosphorus	PO_4 - P	mg/l	0 - 2	mg/l
Potassium	K^{+}	mg/l	0 - 2	mg/l
MISCELLANEOUS				
Boron	B	mg/l	0 - 2	mg/l
Acid - Basicity	pH	1 - 14	6.0 - 8.5	
Sodium Adsorption Ratio[3]	SAR	(me/l)$^{1/2}$	0 - 15	

1. dS/m = deciSiemen/meter in S.I. units (equivalent to 1 mmho/cm = 1 millimho/centimeter)
   mg/l = milligram per litre = parts per million (ppm)
   me/l = milliequivalent per litre (mg/l ÷ equivalent weight = me/l) in SI units, 1 me/l = 1 millimol litre adjusted for electron charge
2. NO3-N means the laboratory will analyse for NO3 but will report the NO3 in terms of chemically equivalent nitrogen. Similarly, for NH4-N the laboratory will analyse for NH4 but report in terms of chemically equivalent elemental nitrogen. The data [illegible] available in the [illegible] be the sum of the equivalent elemental nitrogen.
   The same reporting method is used for phosphate.
3. SAR is calculated from the Na, Ca and Mg reported in me/l.

Table E-12

Crop tolerence and yield potential of selected crops as influenced by irrigation water salinity (ECw) or soil salinity (ECe)

	Yield potential (2)									
	100%		90%		75%		50%		0% maximum(3)	
	ECe	ECw	ECe	ECw	ECe	ECw	ECe	ECw	ECe	ECw
Field crops										
Barley *(Hordeum Vulgare)* (4)	8.0	5.3	10	6.7	13	8.7	18	12	28	19
Cotton *(Gossypium hirsutum)*	7.7	5.1	9.6	6.4	13	8.4	17	12	27	18
Sugarbeet *(Beta vulgaris)* (5)	7.0	4.7	8.7	5.8	11	7.5	15	10	24	16
Sorghum *(Sorghum bicolor)*	6.8	4.5	7.4	5.0	8.4	5.6	9.9	6.7	13	8.7
Wheat *(Triticum aestivum)* (4), (6)	6.0	4.0	7.4	4.9	9.5	6.3	13	8.7	20	13
Wheat durum *(Triticum turgidum)*	5.7	3.8	7.6	5.0	10	6.9	15	10	24	16
Soyabean *(Glycine max)*	5.0	3.3	5.5	3.7	6.3	4.2	7.5	5.0	10	6.7
Cowpea *(Vigna unguiculata)*	4.9	3.3	5.7	3.8	7.0	4.7	9.1	6.0	13	8.8
Groundnut *(peanut)* *(Arachis hypogaea)*	3.2	2.1	3.5	2.4	4.1	2.7	4.9	3.3	6.6	4.4
Rice *(paddy)* *(Oriza sativa*	3.0	2.0	3.8	2.6	5.1	3.4	7.2	4.8	11	7.6
Sugarcane *(Saccharum officinarum)*	1.7	1.1	3.4	2.3	5.9	4.0	[illegible]	[illegible]	[illegible]	[illegible]
Corn *(maize)* *(Zea mays)*	1.7	1.1	2.5	1.7	3.8	2.5	5.9	3.9	10	6.7
Flax *(Linum usitatissimum)*	1.7	1.1	2.5	1.7	3.8	2.5	5.9	3.9	10	6.7
Broadbean *(Vicia faba)*	1.5	1.1	2.6	1.8	4.2	2.0	6.8	4.5	12	8.0
Bean *(phaseolus vulgaris)*	1.0	0.7	1.5	1.0	2.3	1.5	3.6	2.4	6.3	4.2
Vegetable crops										
Squash zucchini *(courgette)* *(Cucurbita pepo melopepo)*	4.7	3.1	5.8	3.8	7.4	4.9	10	6.7	15	10
Beet, red *(Beta vulgaris)*(5)	4.0	2.7	5.1	3.4	6.8	4.5	9.6	6.4	15	10
Squash, scallop *(Cucurbita pepo melopepo)*	3.2	2.1	3.8	2.6	4.8	3.2	6.3	4.2	9.4	6.3
Broccoli *(Brassica oleracea botrytis)*	2.8	1.9	3.9	2.6	5.5	3.7	8.2	5.5	14	9.1
Tomato *(Laycopersicon esculentum)*	2.5	1.7	3.5	2.3	5.0	3.4	7.6	5.0	13	8.4
Cucumber *(Cucumis sativus)*	2.5	1.7	3.3	2.2	4.4	2.9	6.3	4.2	10	6.8
Spinach *(Spinacia oleracea)*	2.0	1.3	3.3	2.2	5.1	3.5	8.6	5.7	15	10
Celery *(Apium graveolens)*	1.8	1.2	3.4	2.3	5.8	3.9	9.9	6.6	18	12
Cabbage *(Brassica oleracea capitata)*	1.8	1.2	2.8	1.9	4.4	2.9	7.0	4.6	12	8.1
Potato *(Solanum tuberosum)*	1.7	1.1	2.5	1.7	3.8	2.5	5.9	3.9	10	6.7
Corn, sweet *(maize)* *(Zea mays)*	1.7	1.1	2.5	1.7	3.8	2.5	5.9	3.9	10	6.7
Sweet potato *(Impomoea batatas)*	1.5	1.0	2.4	1.6	3.8	2.5	6.0	4.1	11	7.1
Pepper *(Capsicum annuum)*	1.5	1.0	2.2	1.5	3.3	2.2	5.1	3.4	8.6	5.8
Lettuce *(Lactuca sativa)*	1.3	0.9	2.1	1.4	3.2	2.1	5.1	3.4	9.0	6.0
Radish *(Raphanus sativus)*	1.2	0.8	2.0	1.3	3.1	2.1	5.0	3.4	8.9	5.9
Onion *(Allium cepa)*	1.2	0.8	1.8	1.2	2.8	1.8	4.3	2.9	7.4	5.0
Carrot *(Daucus carota)*	1.0	0.7	1.7	1.1	2.8	1.9	4.6	3.0	8.1	5.4
Bean *(Phaseolus vulgaris)*	1.0	0.7	1.5	1.0	2.3	1.5	3.6	2.4	6.3	4.2
Turnip *(Phaseolus vulgaris)*	0.9	0.6	2.0	1.3	3.7	2.5	6.5	4.3	12	8.3
Forage crops										
Wheatgrass, tall *Agropyron elongatum)*	7.5	5.0	9.9	6.6	13	9.0	19	13	31	21
Wheatgrass, fairway crested *(Agropyron cristatum)*	7.5	5.0	9.0	6.0	11	7.4	15	9.8	22	15
Bermuda grass *(Cynodon dactylon)* (7)	6.9	4.6	8.5	5.6	11	7.2	15	9.8	23	15
Barley *(forage)* *Hordeum vulgare)* (4)	6.0	4.0	7.4	4.9	9.5	6.4	13	8.7	20	13
Ryegrass perennial *Lolium perenne)*	5.6	3.7	6.9	4.6	8.9	5.9	12	8.1	19	13
Trefoil, narrowleaf birdsfoot (8) *Lotus corniculatus tenuifolium)*	5.0	3.3	6.0	4.0	7.5	5.0	10	6.7	15	10

Table E-12 Continued

	Yield potential									
	100%		90%		75%		50%		0% maximum (3)	
	ECe	ECw	ECe	ECw	ECe	ECw	ECe	ECw	Ece	ECw
Harding grass *(Phalaris tuberosa)*	4.6	3.1	5.9	3.9	7.9	5.3	11	7.4	18	12
Fescue, tall *(Festuca elatior)*	3.9	2.6	5.5	3.6	7.8	5.2	12	7.8	20	13
Wheatgrass, standard crested *(Agropyron sibiricum)*	3.5	2.3	6.0	4.0	9.8	6.5	16	11	28	19
Vetch, common *(Vicia angustifolia)*	3.0	2.0	3.9	2.6	5.3	3.5	7.6	5.0	12	8.1
Sudan grass *(Sorghum sudanense)*	2.8	1.9	5.1	3.4	8.6	5.7	14	9.6	26	17
Wildrye, beardless *(Elymus trucoides)*	2.7	1.8	4.4	2.9	6.9	4.6	11	7.4	19	13
Cowpea *(forage)* *(Vigna unguiculata)*	2.5	1.7	3.4	2.3	4.8	3.2	7.1	4.8	12	7.8
Trefoil, big *(Lotus uliginosus)*	2.3	1.5	2.8	1.9	3.6	2.4	4.9	3.3	7.6	5.0
Sesbania *(Sesbania exaltata)*	2.3	1.5	3.7	2.5	5.9	3.9	9.4	6.2	17	11
Sphaerophysa *(Sphaerophysa salsula)*	2.2	1.5	3.6	2.4	5.8	3.8	9.3	6.2	16	11
Alfalfa *(Medicago sativa)*	2.0	1.3	3.4	2.2	5.4	3.6	8.8	5.9	16	10
Lovegrass *(Eragrostis sp.)* (9)	2.0	1.3	3.2	2.1	5.0	3.3	8.0	5.3	14	9.3
Corn *(forage)* *(maize)* *(Zea mays)*	1.8	1.2	3.2	2.1	5.2	3.5	8.6	5.7	15	10
Clover, berseem *(Trifolium alexandrinum)*	1.8	1.2	3.2	2.1	5.2	3.4	8.6	5.8	16	7
Orchard grass *(Dactylis glomerata)*	1.5	1.0	3.1	2	5.5	3.7	9.6	6.4	18	2
Foxtail, meadow *(Alopecurus pratensis)*	1.5	1.0	2.5	1.7	4.1	2.7	6.7	4.5	12	7.9
Clover, red *(Trifolium pratense)*	1.5	1.0	2.3	1.6	3.6	2.4	5.7	3.8	9.8	6.6
Clover, alsika *(Trifolium hybridum)*	1.5	1.0	2.3	1.6	3.6	2.4	5.7	3.8	9.8	6.6
Clover, ladino *(Trifolium repens)*	1.5	1.0	2.3	1.6	3.6	2.4	5.7	3.8	9.8	6.6
Clover, strawberry *(Trifolium fragiferum)*	1.5	1.0	2.3	1.6	3.6	2.4	5.7	3.8	9.8	6.6
Fruit crops (10)										
Date palm *(Phoenix dactylifera)*	4.0	2.7	6.8	4.5	11	7.3	18	12	32	21
Grapefruit *(Citrus paradisi)* (11)	1.8	1.2	2.4	1.6	3.4	2.2	4.9	3.3	8.0	5.4
Orange *(Citrus sinensis)*	1.7	1.1	2.3	1.6	3.3	2.2	4.8	3.2	8.0	5.3
Peach *(Prunus persica)*	1.7	1.1	2.2	1.5	2.9	1.9	4.1	2.7	6.5	4.3
Apricot *(Prunus armeniaca)* (11)	1.6	1.1	2.0	1.3	2.6	1.8	3.7	2.5	5.8	3.8
Grape *(Vitus sp.)* (11)	1.5	1.0	2.5	1.7	4.1	2.7	6.7	4.5	12	7.9
Almond *(Prunus dulcis)* (11)	1.5	1.0	2.0	1.4	2.8	1.9	4.1	2.8	6.8	4.5
Plum, prune *(Prunus domestica)* (11)	1.5	1.0	2.1	1.4	2.9	1.9	4.3	2.9	7.1	4.7
Blackberry *(Rubus sp.)*	1.5	1.0	2.0	1.3	2.6	1.8	3.8	2.5	6.0	4.0
Boysenberry *(Rubus ursinus)*	1.5	1.0	2.0	1.3	2.6	1.8	3.8	2.5	6.0	4.0
Strawberry *(Fragaria sp.)*	1.0	0.7	1.3	0.9	1.8	1.2	2.5	1.7	4.0	2.7

(1) Adapted from Maas and Hoffman (1977) and Maas (1984). These data should only serve as a guide to relative tolerances among crops. Absolute tolerances vary depending upon climate, soil conditions and cultural practices. In gypsiferous soils, plants will tolerate about 2ds/m higher soil salinity (ECe) than indicated but the water salinity (ECw) will remain the same as shown in this table.

(2) ECe means average root zone salinity as measured by electrical conductivity of the saturation extract of the soil, reported in decisiemens per meter (ds/m) at 25C. ECw means electical conductivity of the irrigation water in deci Siemens per meter (ds/m). The relationship between soil salinity and water salinity (ECe=1.5 ECw) assumes a 15-20 leaching fraction and a 40-30-20-10% water use pattern for the upper to lower quarters of the root zone.

(3) The zero yield potential or maximum ECe indicates the theoretical soil salinity (ECe) at which crop growth ceases.

(4) Barley and wheat are less tolerant during germination and seedling stage. ECe should not exceed 4-5 dS/m in the upper soil during this period.

(5) Beets are more sensitive during germination. ECe should not exceed 3 ds/m in the seedling area for garden beets and sugar beets.

(6) Semi-dwarf, short cultivars may be less tolerant.

(7) Tolerance given is an average of several varieties. Suwannee and Coastal Bermuda grass are about 20% more tolerant, while common and Greenfield Bermuda grass are about 20% less tolerant.

(8) Broadleaf Birdsfoot Trefoil seems less tolerant than Narrowleaf Birdsfoot Trefoil.

(9) Tolerance given is an average for both Weeping Lovegrass and Weeping Lovegrass. Lehmann Lovegrass seems about 50% more tolerant.

(10) These data are applicable when [illegible] and when there is no [illegible].

(11) Tolerance evaluation is based on tree growth and not on yield.

Source: FAO Guidelines, R.S. Ayers & D.W. Westcot (1985)

Table E-13

Summary of requirements of Jordanian Standard 893/1994 for treated domestic wastewater.

Parameter	Maximum allowable limit (mg/L)*	
	Disposed to wadis, rivers, surface water bodies, and groundwater recharge	Reuse for irrigation
pH	6.5-9	6.5-9
Temperature change (C°)	<3	-
D.O	≥1	-
TDS	3000	2000 (1)
TSS	50(3) / 200(4)	100 (3)
BOD5	50(3) / 50(4)	-
COD	150(3) / 150(4)	-
NH3	30	-
FOG	15	15
ABS	6	-
Cl2	0.5 (5)	-
Phenol	0.5	-
TFCC MPN/100mL	<1000	<1000 (6)
Intestinal nematodes	<1	<1 (6)

* All units are in mg/L except where noted.

(1) Depends on degree of restriction (none, slight to moderate or severe).

(2) Depends on method of irrigation

(3) Conventional wastewater treatment plants.

(4) Waste stabilization ponds

(5) This is a minimum limit of residual chlorine and it should be linked with total fecal coliform count

(6) FAO and WHO guidelines or their amendments should be taken into consideration

APPENDIX F

PHOSPHATE MANUFACTURING FACILITY PHOTOS

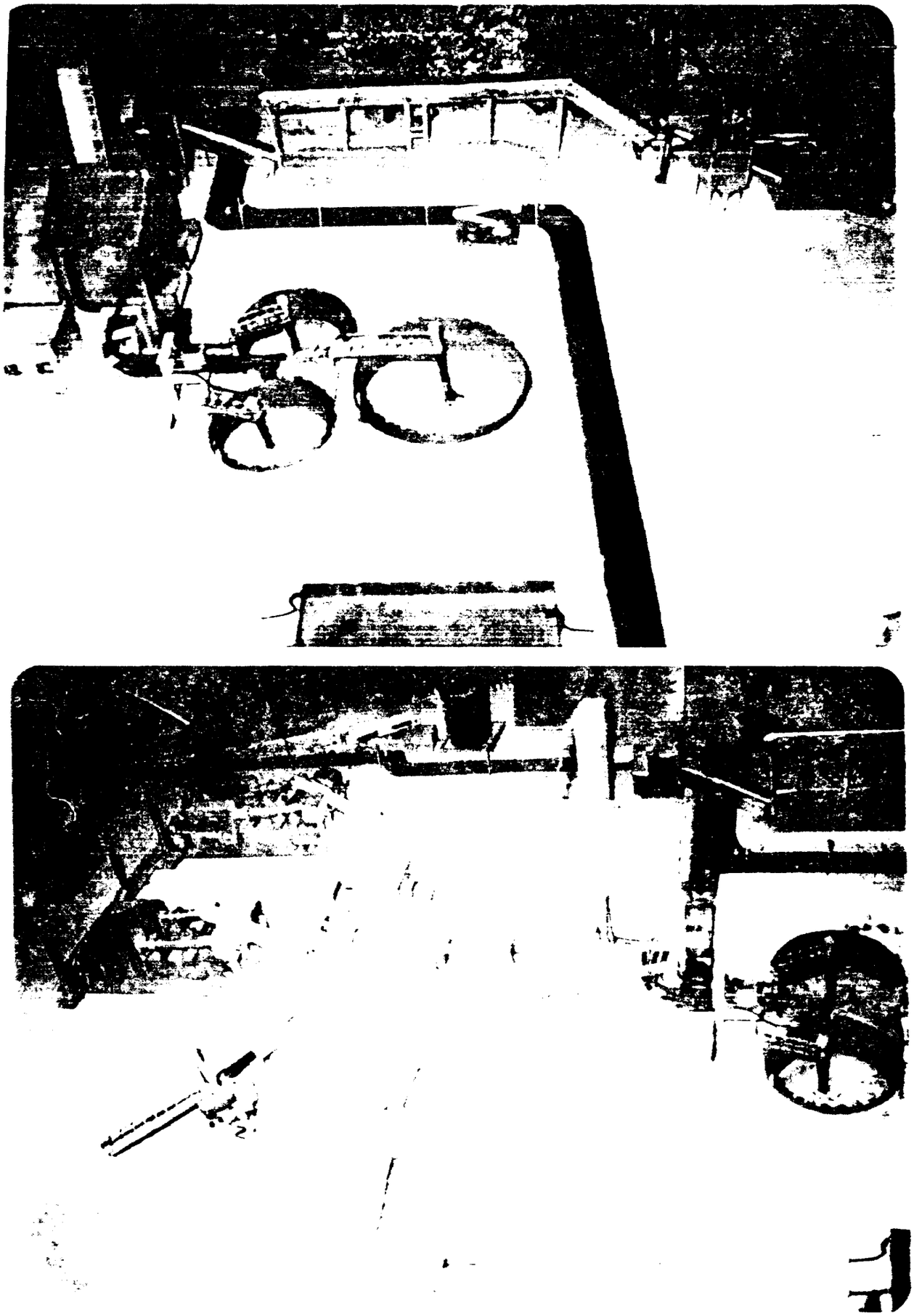

A - Ablac Beneficiation Facility Mode

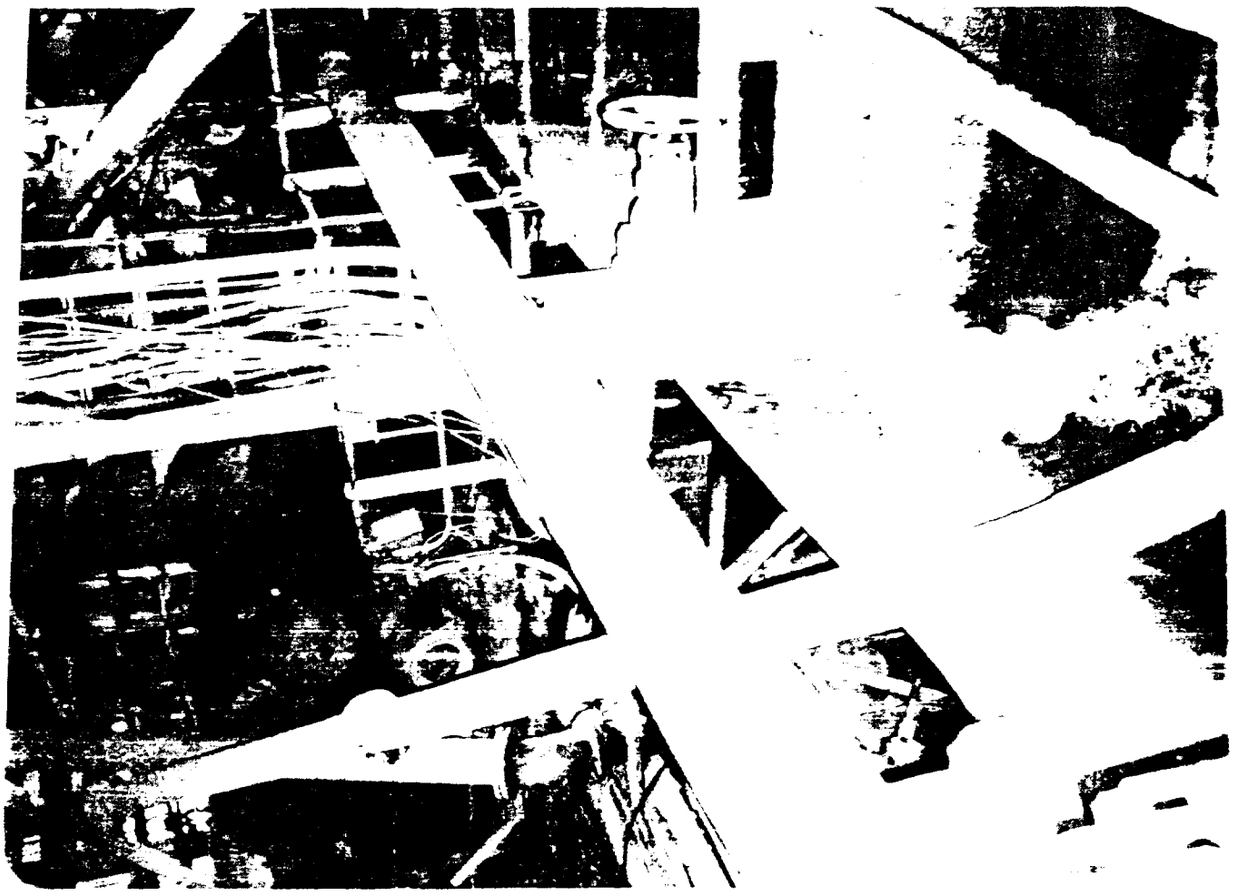

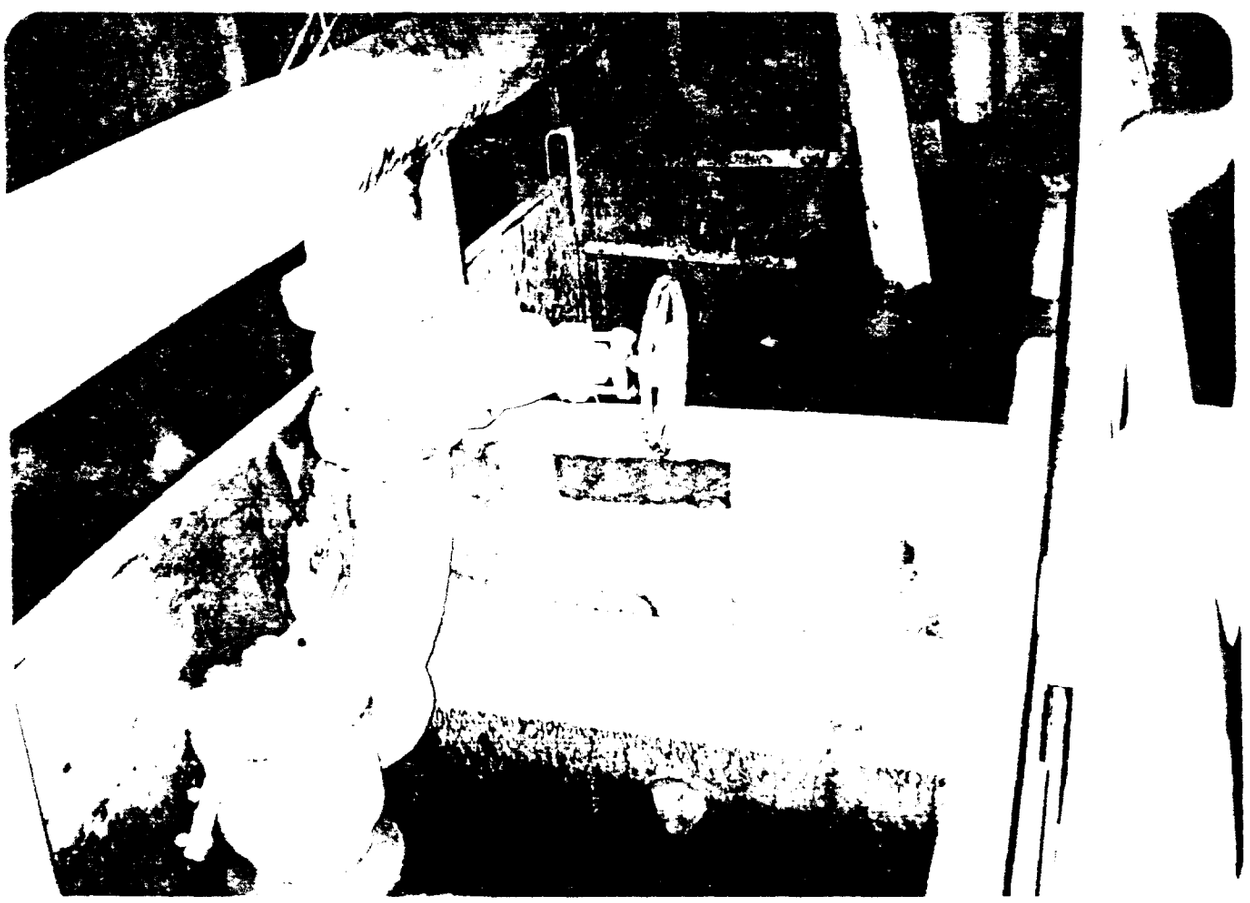

Typical Ore Washing System

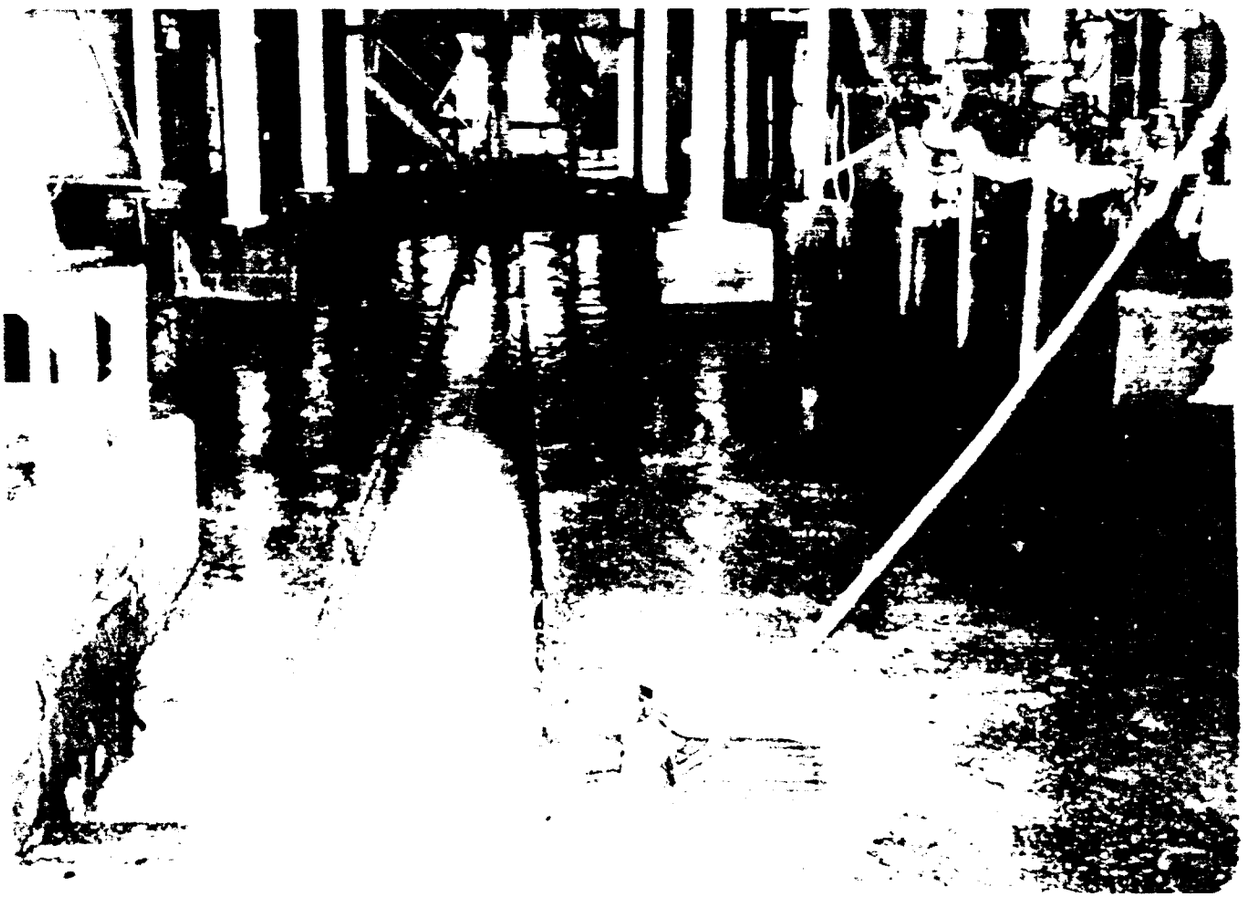

Floor Drain Collection Trench

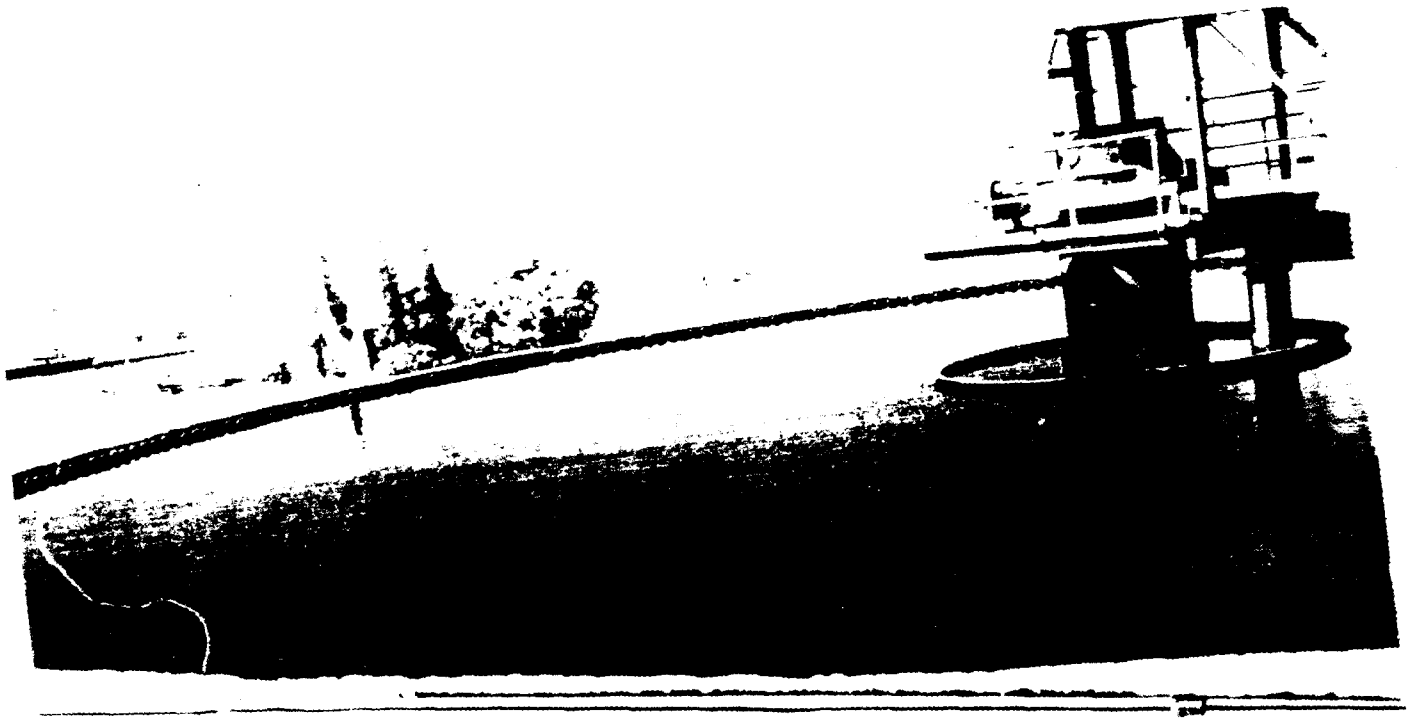

Phosphate Sludge Thickener and Underflow Discharge Pumps

Ore Conveying System

Waste Ore Material Storage Pile