PN-ABX-781
ISN 98048

Resource Management Associates of Madison, Inc.
Madison, Wisconsin, U.S.A.

ENERGY EFFICIENCY AUDIT REPORT

DISTRICT HEATING IN THE UKRAINE
Kiev, Ukraine

November 1992

PREPARED BY: RESOURCE MANAGEMENT ASSOCIATES OF MADISON, INC.
Madison, WI

and

Ministry of Power and Electrification
Kiev, Ukraine

U.S. AGENCY FOR INTERNATIONAL DEVELOPMENT
BUREAU FOR EUROPE
WASHINGTON, D.C. 20523

PN-ABX-781

ENERGY EFFICIENCY AUDIT REPORT

DISTRICT HEATING IN THE UKRAINE
Kiev, Ukraine

November 1992

PREPARED BY: RESOURCE MANAGEMENT ASSOCIATES OF MADISON, INC.
520 University Avenue
Suite 300
Madison, WI 53703
(608) 283-2880

and

Ministry of Power and Electrification
Kiev, Ukraine

U.S. AGENCY FOR INTERNATIONAL DEVELOPMENT
BUREAU FOR EUROPE
OFFICE OF DEVELOPMENT RESOURCES
ENERGY & INFRASTRUCTURE DIVISION
WASHINGTON, D.C. 20523
USAID Contract CCS-0002-C-00-2008-00

Table of Contents

i. Executive Summary 1

1.0 Background 6
- 1.1 Origin of Project 6
- 1.2 Participating Entities 6
- 1.3 Country and Economic Setting 7
  - 1.3.1 Social/Economic 9
  - 1.3.2 Supply/Demand 10
    - 1.3.2.1 Heat 12
    - 1.3.2.2 Fuel 14
    - 1.3.2.3 Hot Water 17
    - 1.3.2.4 Electricity 17
  - 1.3.3 Costs and Sales Prices 18
- 1.4 Environmental Impacts 21
- 1.5 Audit Methodology 22
  - 1.5.1 Specific Audit Activities 23
  - 1.5.2 General Audit Activities 23

2.0 Description of Facilities 24
- 2.1 Heat Production 24
  - 2.1.1 History 24
  - 2.1.2 Management & Organization 24
  - 2.1.3 End-Users/Customers 24
  - 2.1.4 Generating Equipment and Capacity 24
  - 2.1.5 Operations and Maintenance 31
  - 2.1.6 Energy Efficiency Measures Implemented 32
- 2.2 Thermal Distribution System 32
  - 2.2.1 History 32
  - 2.2.2 Management and Organization 33
  - 2.2.3 Equipment and Capacity 33
  - 2.2.4 Dispatcher 35
  - 2.2.5 Operations and Maintenance 36
  - 2.2.6 Energy Efficiency Measures Implemented 36
- 2.3 End-User 37
  - 2.3.1 Industrial 37
    - 2.3.1.1 History 37
    - 2.3.1.2 Tariffs and Regulations 39
    - 2.3.1.3 Description of Systems 41
    - 2.3.1.4 Energy Efficiency Measures Implemented 41
    - 2.3.1.5 Systems to be Audited 41
  - 2.3.2 Commercial 42
    - 2.3.2.1 History 42
    - 2.3.2.2 Tariffs and Regulations 42

2.3.2.3 Description of Systems 42
2.3.2.4 Energy Efficiency Measures Implemented 43
2.3.2.5 Systems to be Audited 43
2.3.3 Residential 43
2.3.3.1 History 43
2.3.3.2 Tariffs and Regulations 44
2.3.3.3 Description of Systems 45
2.3.3.4 Energy Efficiency Measures Implemented 48
2.3.3.5 Systems to be Audited 48

3.0 Description of Audit 49
3.1 System Specific Audit 49
3.1.1 Scope and Methodology 49
3.1.2 Production and Peaking Plants 50
3.1.2.1 General 50
3.1.2.2 Combustion Efficiency 50
3.1.2.3 Steam Boiler Area 53
3.1.2.4 Boiler Control Rooms 54
3.1.2.5 Boiler Stack Area 54
3.1.2.6 Hot Water Heating System 54
3.1.3 Thermal Distribution System 54
3.1.3.1 General 54
3.1.3.2 Pipe Insulation 55
3.1.3.3 Leakage 56
3.1.4 End-User 56
3.1.4.1 Industrial 56
3.1.4.1.1 Facility Selected for Audit 56
3.1.4.1.2 Insulation 56
3.1.4.1.3 Leakage 57
3.1.4.1.4 Controls 57
3.1.4.1.5 Domestic Hot Water 57
3.1.4.1.6 Ventilation 57
3.1.4.2 Commercial 58
3.1.4.2.1 Facilities Selected for Audit 58
3.1.4.2.2 Insulation 58
3.1.4.2.3 Leakage 58
3.1.4.2.4 Controls 58
3.1.4.2.5 Domestic Hot Water 60
3.1.4.3 Residential 60
3.1.4.3.1 Facility Selected for Audit 60
3.1.4.3.2 Insulation 60
3.1.4.3.3 Leakage 60
3.1.4.3.4 Controls 60
3.2 General Audit 62
3.2.1 Scope & Methodology 62

3.2.2 Production Facilities 62
3.2.3 Distribution Systems 62
3.2.4 End-User 62

4.0 Findings and Recommendations 64
4.1 Specific System Audits 64
4.1.1 Heat Production 64
4.1.1.1 Short-Term Opportunities 64
4.1.1.2 Medium and Long-Term Opportunities 66
4.1.2 Thermal Distribution System 67
4.1.2.1 Short-Term Opportunities 67
4.1.2.2 Medium and Long-Term Opportunities 67
4.1.3 End-User 69
4.1.3.1 Short-Term Opportunities 69
4.1.3.2 Medium and Long-Term Opportunities 70
4.2 General System Audit 71
4.2.1 Heat Production 71
4.2.2 Thermal Distribution System 73
4.2.3 End-User 73
4.3 Replication Potential 73
4.3.1 System Level 73
4.3.1.1 Heat Production 73
4.3.1.2 Thermal Distribution System 73
4.3.1.3 End-User 73
4.3.2 National Level 74
4.3.2.1 Heat Production 74
4.3.2.2 Thermal Distribution System 74
4.3.2.3 End-User 74

List of Tables

Table 1. Kievenergo Fuel Prices 1
Table 2. Kievenergo Tariffs 2
Table 3. Energy Conservation Opportunity Summary 5
Table 4. Thermal Capacity of District Heating System in Kiev 12
Table 5. Thermal and Electrical Equipment Capacity 13
Table 6. Electric Users in the Ukraine 17
Table 7. Fuel Prices 18
Table 8. Kievenergo Tariffs 21
Table 9. Thermal Power Station (TPS) #5 25
Table 10. Heating Value of Fuels 26
Table 11. Teploset Water Heating Stations 34
Table 12. Belichi Peaking Station Capacity 35
Table 13. Annual Energy Consumption, 1991 38
Table 14. Kievenergo Industrial Tariffs 39

Table 15. Kievenergo Commercial Tariffs 42
Table 16. Kievenergo Residential Tariffs 45
Table 17. Housing Thermal Energy Statistics 46
Table 18. Boiler Efficiency Test Results 50
Table 19. Fuel Analysis 52
Table 20. Fuels Burned, By Percent 52
Table 21. Peaker Boiler Efficiency TPS-5 53
Table 22. Distribution Piping Insulation Thickness 55

List of Figures

Figure 1. Ministry of Electrification and Power Supply 8
Figure 2. Kievenergo Personnel 11
Figure 3. Simplified Organizational Chart 15
Figure 4. Ukraine Generation of Electric Power 19
Figure 5. Units 3 & 4 Steam Cycle 29
Figure 6. Units 1 & 2 Steam Cycle 30
Figure 7. Piping Arrangement 40
Figure 8. Typical Piping Arrangement 47
Figure 9. Kiev Opera & Ballet House 1990 Heat Energy 59
Figure 10. Housing Piping Schematic 61
Figure 11. Pipe-Within-A-Pipe 68

List of Appendices

Appendix A
Payback Calculations

Appendix B
Combustion Efficiency Calculations

Appendix C
Joseph Technology Trip Report

Appendix D
List of Abbreviations

Appendix E
Photographs

i. Executive Summary

The Ukraine is in a tremendous period of change, economically as well as socially. The independence of the former Soviet Republics has severed many former relationships, and left others uncertain. The energy picture is not clear, but what is certain is that the price of energy fuels is going up quickly and at a drastic rate. Sources of energy also are changing, due to shortages in some of the former Republics. These shortages are causing the Ukraine to seek out new suppliers, but the new sources will not come cheaply. Currently the Ukraine still pays less than world prices for fuels. But each new rise in price is followed by another.

The energy tariffs are changing frequently in an effort to keep up with the rise in fuel prices (see *Table 1* and *Table 2*). In the past, the Ministry of Power and Electrification was making a profit on the production of heat and electric power. During the month of April, 1992, the Ministry had to borrow eight billion rubles to pay their fuel costs. The government is reluctant to raise tariffs because the economy is already depressed, and salaries in the general public have not risen nearly as fast as the cost of living. Many individuals are unable to pay their monthly bills, resulting in a shortage of funds to the Ministry. To ease the impact of the tariffs, the Ministry of Economy decided to pass the burden of the increased costs on to the industries, believing that they can more easily absorb the increases than the general public. This is seen in *Table 2*, where the last column compares the world thermal energy price to the current price in Kiev. The rate for the industrial sector is relatively close to the world price, with the commercial sector less than a third of the world price. But the residential sector is more than seventy times smaller than the world price for thermal energy!

Table 1. Kievenergo Fuel Prices

Fuel	1991	April 1, 1992	Percent Increase	Equivalent Cost in $ U.S.	World Price $ U.S.
Natural Gas R/1,000 m^3	330	1,600-2,000	445%	16-20	134.55
Coal R/metric ton	27-35	2,500	8,233%	25	88.33
Heavy Fuel Oil R/metric ton	70	2,600	3,614%	17-20	138.69

Table 2. Kievenergo Tariffs
Thermal Heat, Rubles/Gcal

Category	1990	1991	1992	Percent Increase	World Price	Ratio of World Price to Current
Industrial	12.098 ($0.115)*	19.871 ($0.189)	2,057.37 ($19.59)	17,042	3,125 ($29.76)	1.52
Commercial	12.021 ($0.114)	15.518 ($0.148)	907.57 ($8.644)	7,463	3,125 ($29.76)	3.44
Residential	7.122 ($0.068)	12.822 ($0.122)	42 ($0.4)	489	3,125 ($29.76)	74.4

*Values in parenthesis are dollars per unit shown, based on an exchange rate of 105 rubles per one U.S. dollar.

The district heating technology used in the audited power plants is very good. The main systems are as good as, if not better than, most countries', with super critical boilers and oxygenated water systems. However, the systems are lacking in the area of monitoring and control. Still, they perform quite well, largely due to manual efforts utilizing the existing instrumentation. Automatic monitoring and control would be beneficial, as the systems would then respond quickly and accurately to any changes within the system.

Within the power plant systems, the peaking boilers probably have the lowest efficiency. These units are used to meet the heating needs during extremely cold weather periods. During mild weather and summer they do not operate. The district heating system is basically divided into three main divisions: the thermal power plants, the distribution system and the end-users. Peaking boilers exist in all three segments, with the distribution system having its own boilers, and housing end-users also having peaking stations. While these units are typically referred to as peaking units, many of the units in the distribution system and housing facilities run year around, and are not peakers as the word is typically used in the United States.

The distribution system also includes eighteen pumping stations, to provide enough pressure to move the water up the hills of Kiev (about 150 meter elevation rise), and then up the high rise buildings. The pumping system operates at a constant speed, with the pressure controlled by the on/off operation of the pumps. As less pressure is needed, fewer pumps are then operated.

One of the largest problems facing the distribution authority is that of corrosion. Portions of Kiev have a high ground water table, and at various times of the year the piping either lies in water or is in very moist conditions. This high moisture concentration causes external corrosion on the piping, resulting piping that tends to have a life expectancy of only twelve years. In addition, the piping insulation life expectancy is shortened to seven years.

Therefore, the piping is essentially not insulated for five years. During this time, the high pressure and external corrosion combine to cause leaks. Fifty million rubles (approximately $475,000) are spent annually to repair and/or replace piping due to corrosion and leaks. Previous efforts to slow or eliminate the corrosion process have been largely unsuccessful. A new design will be tested this summer, basically employing a pipe-within-a-pipe system. The outer pipe will be sealed airtight to prohibit water from coming into contact with the insulation and the inner piping. Approximately seventy meters will be installed as an experiment.

Ninety-five percent of the end-users within the district heating system do not have any temperature control within their buildings. The 5% that do are within the industrial sector. Nearly all facilities have an inducing type venturi in the district heating supply piping at the piping entrance to each building. This device is designed to provide heat to the building by blending supply and return water. The device is designed for the peak condition during the coldest part of the year. Since the device cannot modulate as the outside air temperature varies, heating supply water temperature control, and therefore building space temperature control, is achieved by adjusting the district heating supply water temperature. This system allows for no individual building temperature control or individual apartment temperature control and wastes much energy.

The district heating system serving Kiev is very large, and because of this representative facilities were visited and audited. This activity has resulted in a number of recommendations to improve the energy efficiency of these systems. These recommendations are shown in *Table 3*. The recommendations center mainly in two areas: the boiler systems and the end-users. Recommendations are not being made for the piping distribution system due to the high cost and difficulty in shipping United States' piping products (due to large size) to the Ukraine. Recommendations for the boiler systems include instrumentation to more accurately monitor the fuel consumption and the boiler performance. For the end-users, the recommendations are for temperature control and metering. The recommendations for the commercial end-users include installation of a new three way control valve to control the building temperature in response to changes in the outdoor temperature. This system will be installed in parallel to the existing system, so that the original system will always be available if needed. The residential recommendation is for pressure regulators to decrease the amount of overheating relating to pressure changes in the district heating system. While this system is not as sophisticated as the three way control valve mentioned above, it is less expensive. *Table 3* shows paybacks if world energy prices and local prices are used. In-depth discussion of each recommendation and its benefits are found later in the report.

The technical capabilities of the engineers within the Ukraine appears to be very good. They are very aware of the concepts and techniques that have been recommended. These concepts have not been employed in the Ukraine for three main reasons: 1) the equipment has not been available in the past; 2) there is a shortage of hard currency; and 3) energy availability and price have never been a problem or concern in the past. The shortage of

currency is a problem that will not be easily solved. As energy fuel prices continue to rise, energy tariffs will have to follow. Energy conservation and energy efficiency will become more and more important to everyone as this trend continues. The recommendations that are made today will almost certainly have a shorter payback period next month, if not next week, as the prices continue to rise. Even though obtaining hard currency is a problem, it should not prevent the investment in energy conservation measures. Reducing energy consumption is essential in benefitting end-users by lowering their costs.

One more major issue still exists in the Ukraine, and that is the issue of privatization. The Minister of Power and Electrification within the Ukraine is developing plans for privatization of the district heating and power plant systems. A British economic consulting firm has been studying the issue, and is preparing a report on its findings. Foreign firms have also been inquiring about the possibilities of future investments. But so far, there is no law within the Ukraine that would allow privatization to take place. Although it is assumed by everyone that it will happen, there is a wide range of opinions as to when. Privatization may well help the economic situation if foreign investors contribute funds to the economy. However, it will still take time for the general public to be able to afford the energy prices that are coming.

Table 3. Energy Conservation Opportunity Summary

Energy Conservation Opportunity (ECO)	Measure	No. of Units	Est. Energy Savings 10^3 Gcal/Year	Est. Energy Savings 10^3 Rubles	Est. Energy Savings (Dollars)	ECO Cost (Dollars)	Payback Local Prices (Years)	Payback World Prices (Years)
Combustion Analyzers								
Power Plant #5		2	1,100	22,625.4	215,480	9,400	0.04	<0.01
Teploset Peakers		1	4.5	927.2	8,830	4,700	0.53	0.10
Housing Peakers		1	2.2	463.6	4,415	4,700	1.09	0.19
Computer		1	N/A	N/A	N/A	3,300	N/A	N/A
Flow Meters		6	1,100	22,625.4	215,480	27,000	0.13	0.02
In-Situ Oxygen Instrumentation		10	1,100	22,625.4	215,480	46,000	0.21	0.04
Temperature Control Valves								
Opera		1	0.553	501.9	4,780	9,100	1.9	0.55
Railway Bldg.		1	0.328	297.7	2,835	9,100	3.2	0.93
Thermostatic Control Valves								
Opera		27	0.2	15.8	150	950	6.3	1.84
Heat Meters								
Opera		1	*	*	*	3,300	*	*
Railway Bldg.		1	*	*	*	3,300	*	*
Housing		1	*	*	*	3,300	*	*
Ventilation Control		1	0.143	295.2	2,813	1,100	0.4	0.26
Pressure Regulator		1	0.101	4.2	40	1,000	25.0	0.34
		Totals	3,308.0	70,381.8	670,303	126,250		
						Average Payback	0.19	0.04

* There are no direct energy savings resulting from the installation of the heat meters. However, the use of the meters is necessary to allow end-users to document the energy savings. These savings are included with the appropriate other technologies above.

1.0 Background

1.1 Origin of Project

The United States has recognized the newly independent republics of the former Soviet Union as a part of the Commonwealth of Independent States. All of these republics face serious problems in meeting energy needs, due to the disruption of economic and trading relations and the abolishment of the Central Soviet Government. Power plants, factories and residential consumers are experiencing reduced energy supplies due to declining energy production, the switch to hard currency payments for energy product trade between republics, the collapse of centralized distribution systems and the hoarding of supplies in expectation of price increases. Central district heating systems in a number of cities are likely to experience lack of heat for a substantial number of consumers due to the aforementioned factors.

The purpose of this program is to improve the short-term efficiency of the district heating systems. The objectives are to: 1) foster improved management of energy use in the heating plants by identifying and implementing immediate cost effective low-cost/no-cost energy improvements; 2) transfer energy auditing and management techniques including financial and economic analysis techniques; and 3) provide equipment support to implement low-cost options, improve monitoring and energy management, and identify additional energy efficiency opportunities.

To accomplish these objectives, the project includes the following.

1. Reconnaissance to identify district heating plants and local subcontractors for technical and logistical support.
2. Conduct energy audits and training in the plants.
3. Procurement of energy efficiency equipment.
4. Assistance with installation of equipment and audit recommendations.
5. Analysis of policy, institutional, and investment decision-making processes effecting performance and efficiency of district heating plants.
6. Wrap-up seminar for management and technical staff.

USAID has established government cooperation with the program and Resource Management Associates of Madison, Inc. (RMA) is responsible for completing the project tasks in conjunction with participating government organizations and plants.

1.2 Participating Entities

The Ukraine is participating with USAID in this Heating System Energy Efficiency Improvement project. The main Ukrainian participant is the Ministry of Power and Electrification. The Ministry is headquartered in Kiev, and consists of many agencies and offices. This Ministry is responsible for the production of heat and electricity throughout the Ukraine (with the exception of nuclear energy plants, which are under the jurisdiction

of another Ministry). The major divisions within the Ministry of Power and Electrification include eight regional agencies, a national dispatcher and an agency for hydro-electric power plants. In addition to these main or regional agencies, there are numerous other agencies located in the Ministry (see *Figure 1*). These agencies have wide-ranging responsibilities, dealing with all aspects of production of heat and electricity, distribution and maintenance. The Ministry overall consists of 294 enterprises and organizations, with a total of 164,100 personnel. Prior to the break up of the Soviet Union, the Ministry was part of the overall USSR Ministry of Power and Electrification. This organization had 731 agencies, and employed 284,400 people.

The Ukrainian Ministry has identified Kievenergo as the contact for this USAID project. Kievenergo is an agency within the Ministry responsible for providing and distributing heat and electricity to the City of Kiev. Specifically, it was recommended by the Ministry that the energy efficiency work be centered at Thermal Power Station #5 (TPS #5) in Kiev. Reasons for this decision were based on several factors:

- TPS #5 is located in Kiev, and therefore close to coordinating agencies and various offices;
- TPS #5 is twenty years old (originally commissioned in 1971), and therefore is representative of a great number of the power plants in the Ukraine; and
- The staff and management of this plant are highly respected within the Ministry, and are technically very competent.

1.3 Country and Economic Setting

The Ukraine is an independent Republic and a member of the Commonwealth of Independent States. The country has a substantial industrial and agricultural base. The dissolution of the Soviet Union has left all of the Republics in the position of governing themselves and establishing a new government. The economy is uncertain, as many of the previous business and governmental relationships have failed or dissolved, and the trading partners now require hard currency. Hard currency is in short supply, causing shortages of some basic items, such as gasoline (although this shortage may also be due to a lack of available supply), butter, milk, sugar, etc.

The process of changing the economic principles of the country are enormous, as well as slow. There is little if any privatization taking place. An interesting change that was noted is that the power plants now are technically able to negotiate fuel contracts directly with the suppliers, rather than have a Ministry office do it for them. This is still apparently an academic issue, and real control and privatization is yet to come. One problem is that no one in a position of authority knows how to accomplish the privatization, or where to start. Outside forces are entering the picture, trying to be available and ready when privatization takes place. Several different companies and countries have been mentioned during our contacts with various Ukrainian agencies. These companies are now either doing business

Figure 1. Ministry of Electrification and Power Supply

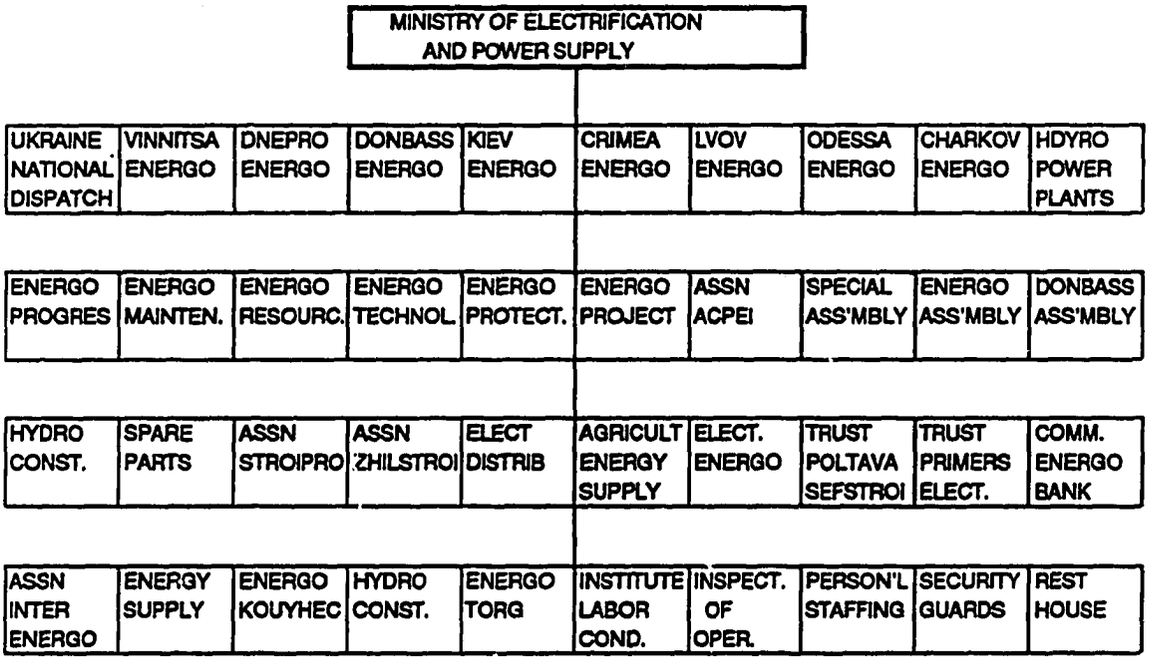

with Ukrainians or are actively seeking business. The Swiss firm ABB and the German firm Siemens are currently doing maintenance work with Ukrainian power plants. It is uncertain how the Ukrainians are paying for this, since hard currency is in short supply for these agencies. EDF (Electricite de France) also has made a proposal to the Ukraine, although the exact details of the proposal are not known.

The Minister of Power and Electrification has indicated that he will announce his plans for privatizing the Ukrainian power plants in September at the Worldwide Energy Organization. During the meeting with the Minister, the Director of Power Plant #5 indicated very strongly that Power Plant #5 must be privatized before September. The Minister replied that the power plant is currently independent. The Director then indicated that they needed to establish a Board of Directors. The Minister eventually indicated that they cannot privatize one plant at a time, that they will be done together. They intend to retain a 51% share in any and all plants, but up to 49% can be sold. The Minister also indicated that he hopes to be able to expand the Ukrainian Electrical capacity so that they can increase their exports. This is viewed as one way in which to raise hard currency. They currently export to Eastern European countries, but hope to expand to Italy.

An English economic consulting firm (Putnam, Harris, & Bartlett of London) has been studying the Ministry of Power and Electrification and is preparing a report dealing with potential privatization activities. This report will most likely form the basis of the Ministry's position on privatization.

1.3.1 Social/Economic

Ukraine is in a transitional stage of independence and learning how to govern themselves. There is no question that the people support independence: over 90% of the voters approved independence in early December 1991. The vote was largely a rejection of rule from Moscow, which was seen as having exploited the resources and people of the Ukraine for decades without a fair return. The independence and recent actions since then have exacerbated relations with Russia to the point that armed conflict is a possibility. These actions include the transfer of ex-Soviet forces within the Ukraine to a new Ukrainian army; demands for control of the Black Sea fleet; and refusal to compromise on issues such as that of the Crimea, where a large minority of ethnic Russian residents reside.

The worsening of relations with Russia will obviously have an effect on economic ties between the two countries. Although the Russians can put pressure on Ukraine by withholding energy resources and other raw materials, Russia's natural gas and petroleum pipelines to Europe pass through Ukrainian territory. Ukraine could counter any cut off of energy resources with tariffs on the oil and gas pipelines through its territory. Russia also has an oil pipeline to Odessa on the Black Sea, on which Ukraine has threatened to impose a 25% fee.

Ukrainian President Leonid Kravchuk had planned a somewhat slow introduction of market reforms, but the speed of reforms in Russia forced Kravchuk to speed up his economic

program, including general price increases in early January 1992, and the introduction of ration coupons to protect scarce necessities. These moves have not been popular, but are still seen as being irreversible.

1.3.2 Supply/Demand

The following information pertains to the supply and demand of heat (hot water) and electricity in Kiev. Kiev's production of heat and electricity is governed and controlled by Kievenergo, which is a regional authority located in Kiev (see *Figure 2*). Therefore, portions of this report will by necessity discuss how Kiev's facilities interrelate with those of the surrounding region. Kievenergo has its own agencies and offices to operate and maintain the plants within its jurisdiction. At present it consists of:

- Seven steam power plants (of which 6 are also thermal plants);
- Thirteen power network subunits;
- Two maintenance offices;
- A coordinating subunit;
- A motor transport service;
- A supplies and equipment branch;
- Two construction enterprises; and
- A computing center.

Electric energy produced within Kievenergo supplies four provinces within the Ukraine (Kiev, Chernigov, Cherkassy, and Zhitomir). These areas include a total of 111.6 km^2 and a population of about nine million people. As of January 1, 1990, Kievenergo had an installed electrical generating capacity of 3,747 MW, and produced 24.9 billion kWh of electricity in 1989. It ranks as the third largest power producer within the Republic of the Ukraine.

Electricity is provided by the three main power plants in Kiev: #4, #5, and #6. The total capacity of these three plants is 1,360 MW. The total electric load for Kiev is about 1,640 MW, requiring some electricity to be supplied from power plants located outside of Kiev but within the Kievenergo network. Electricity is distributed at 110 and 330 kV throughout Kiev. The electricity is produced by steam turbines and generators operating from 90 atm (1,323 psig) up to 240 atm (3,528 psig) of pressure.

The installed capacity of the thermal heating plants in Kievenergo is 9,686 Gcal/hr as of January 1, 1990. Thermal heat is restricted to large population centers, including the major cities within the Ukraine. In Kiev the total thermal heat capacity is 6,947 Gcal/hr (27.6 billion BTU per hour).

Figure 2. Kievenergo Personnel

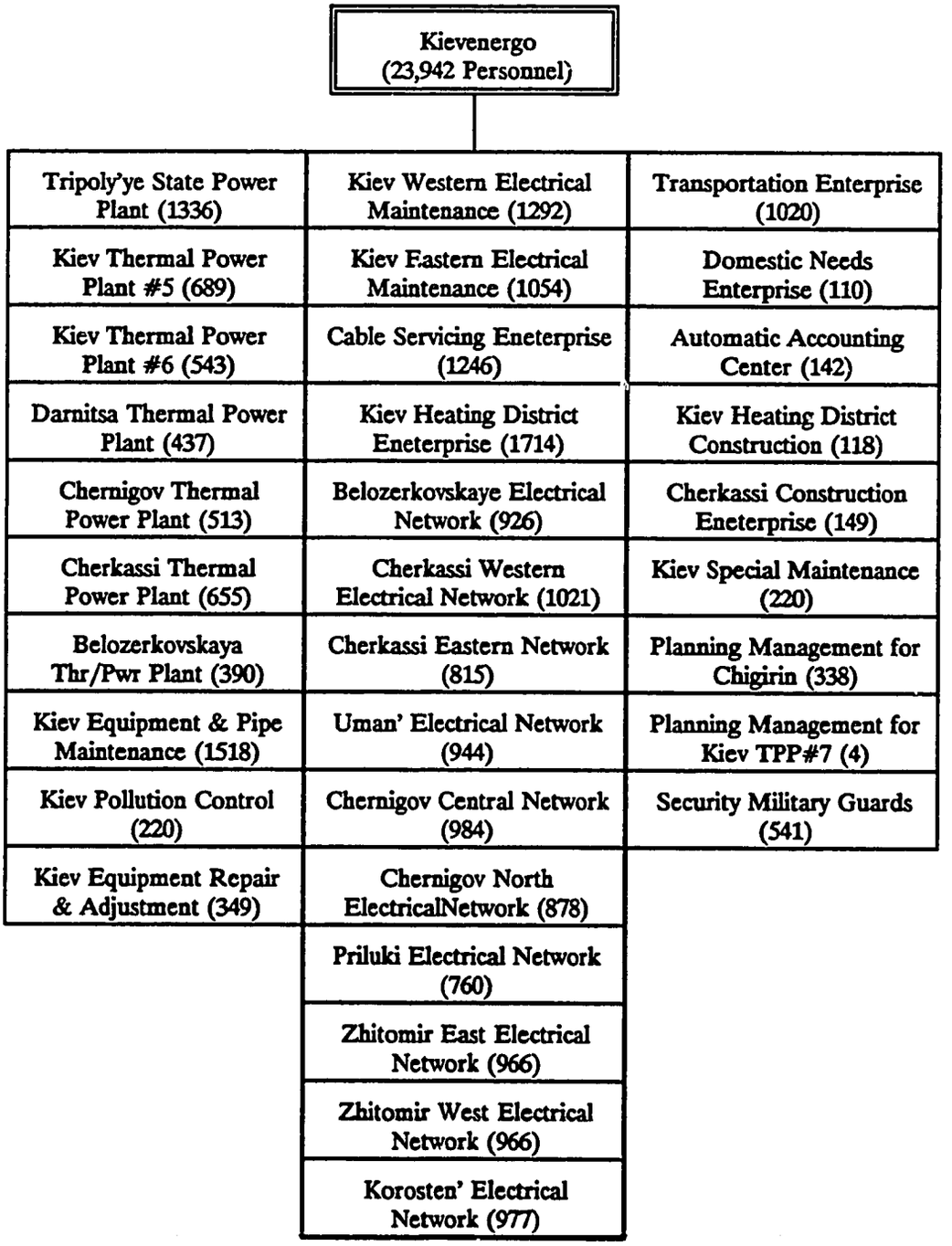

1.3.2.1 Heat

Thermal hot water is circulated throughout the majority of the city of Kiev. The hot water is produced by three district heating plants (#4, #5, and #6), and by nine smaller boiler plants. *Table 4* shows the heating capacity of plants #4 (Darnitsa), #5, and #6 within Kiev, while *Table 5* shows the thermal and electrical equipment and capacity for these three power plants. Power plant #1 is no longer operational, while plants #2 and #3 are still utilized for thermal production (these plants no longer produce electricity). These two plants are considered part of the group of nine boiler plants. The three district heating plants also produce electricity, while the other nine facilities are only for heat. This system provides approximately 50% to 60% of the heating for the city of Kiev, with the remaining 40% coming from industrial plants that have their own boilers (that are not on the district heating system). It is estimated that there are approximately 600 of these industrial facilities within the area of Kiev.

Table 4. Thermal Capacity of District Heating System in Kiev

Facility	Capacity (Gcal/hour)
Thermal Power Plant #4	1,225
Thermal Power Plant #5	1,510
Thermal Power Plant #6	1,377
Distribution Peaking Plants	2,835
Total	6,947 Gcal/hour

The district heating system was designed to deliver a maximum 150 °C water, but the system can only deliver a maximum of about 130 °C water, with a typical return water temperature of 70 °C. The winter water flow rate is between 90,000 to 95,000 m^3/hr, with this value decreasing to approximately 30,000 m^3/hr during the summer for domestic potable water heating. Even though the system cannot achieve the design water temperature, the overall capacity of the system has been adequate to meet the loads of the customers. There are long-range plans to build two new boiler plants that would serve the entire system, but these plants are many years away from being a reality. Construction of power plant #7 has started, but is not proceeding due to lack of funds. However, several additional peaker boilers are currently being added to the system.

The temperature of the district heating circulated water for winter space heating is designed to vary with the outside air temperature by means of the central dispatcher in Kievenergo. The dispatcher is responsible for determining the outside air temperature, and then reading

Table 5. Thermal and Electrical Equipment Capacity

			Boilers													
Power Plant	Boiler Number	Year Started	Capacity ton/hr	Capacity Gcal/hr	Steam atm	Steam Temp C	Fuel	Fuel Flow ton/hr	Fuel Flow m^3/hr	Eff. %	Turbine Number	Year Started	Gen MW	Heat Gcal/hr	Press. atm	Temp C
#5	Unit #1	1971	480	—	140	560	Mazout	33.4	—	93.15	Unit #1	1971	100	160	130	555
							Gas	—	36700	94.05						
	Unit #2	1971	480	—	140	560	Mazout	33.4	—	93.15	Unit #2	1972	100	160	130	555
							Gas	—	36700	94.05						
	Unit #3	1974	1000	—	255	545	Mazout	71.0	—	92.50	Unit #3	1974	250	324	240	540
							Gas	—	77600	93.50						
	Unit #4	1976	1000	—	255	545	Mazout	71.0	—	92.50	Unit #4	1976	250	330	240	540
							Gas	—	77600	93.50						
	Peaker 1	1971	—	180			Mazout	22.3	—	87.90						
							Gas	—	25300	89.90						
	Peaker 2	1972	—	180			Mazout	22.3	—	87.90						
							Gas	—	25300	89.90						
	Peaker 3	1977	—	180			Mazout	22.3	—	87.90						
							Gas	—	25300	89.90						
#6	Unit #1	1982	1000	—	255	545	Gas	—	81900	94.73	Unit #1	1982	250	330	240	540
							Mazout	70.0	—	93.30						
	Unit #2	1984	1000	—	255	545	Gas	—	81900	94.73	Unit #2	1982	250	330	240	540
							Mazout	70.0	—	93.30						
	Peaker 1	1981	—	180	—	—	Gas	—	22760	92.80						
							Mazout	20.8	—	92.40						
	Peaker 2	1982	—	180	—	—	Gas	—	22760	92.80						
							Mazout	20.8	—	92.40						
	Peaker 3	1983	—	180	—	—	Gas	—	22760	92.80						
							Mazout	20.8	—	92.40						
	Peaker 4	1986	—	180	—	—	Gas	—	22760	92.80						
							Mazout	20.8	—	92.40						
Darnitsa (TPP #4)	Peaker 1	1954		105			Gas		14000	92.00						
							Coal			82.70						
	Peaker 2	1954		105			Gas		14000	92.00						
							Coal			82.70						
	Peaker 3	1955		155	14	350	Gas			92.70						
							Coal			82.60						
	Peaker 4	1957		155	14	350	Gas			92.70						
							Coal			82.60						
	#5	1957		170	100	540	Gas		14000	92.20	Unit #5	1958	60	136	90	535
							Coal			82.20						
	#6	1958		220	100	540	Gas		17200	93.60	Unit #6	1959	50	136	90	535
							Coal			84.70						
	#7	1959		220	100	540	Gas		17200	93.60	Unit #7	1960	50	136	90	535
							Coal			84.70						
	#8	1959		220	100	540	Gas		17200	93.60						
							Coal			84.70						
	#9	1960		220	100	540	Gas		17200	93.60						
							Coal			84.70						
	#10	1966		220	100	540	Gas		17200	93.60						
							Coal			84.70						
	Peaker 1	1966		100			Gas		14100	92.00						
							Mazout	12.5		91.50						
	Peaker 2	1966		100			Gas		14100	92.00						
							Mazout	12.5		91.50						
	Peaker 3	1967		100			Gas		14100	92.00						
							Mazout	12.5		91.50						
	Peaker 4	1967		100			Gas		14100	92.00						
							Mazout	12.5		91.50						

a corresponding water distribution temperature from a sliding scale chart. This chart has been calculated to provide adequate space heating during the peak winter conditions.

Another entity, the Housing Energy Office, provides thermal heat to certain facilities within Kiev. This agency is responsible for providing and maintaining heat to the housing facilities. The Housing Energy Office is interrelated with Kievenergo, where they connect to the thermal water distribution system. However, they also have their own peaking boilers and their own distribution system independent of Kievenergo. The distribution system within the major residential districts is operated by the Housing Energy Office. They have 113 peakers that consume natural gas strictly for thermal heat and domestic hot water for the residential buildings. The Housing Energy Office is totally independent of Teploset, being under the jurisdiction of the City Council and the Ministry of Housing. Teploset is within Kievenergo and is responsible for developing and implementing, as well as servicing and maintaining, the district heating system in and around Kiev. See *Figure 3* for a simplified chart of the district heating system within Kiev.

1.3.2.2 Fuel

While the country has many resources, the fuels that it needs for its power plants are mostly imported. Recent data suggests this value to be about 50% for 1990. The cost of the imported fuel is rising quickly, placing a large burden on the general economy. The general attitude of the people appears to be very positive regarding their independence and separation from Russia. However, the general economic hardships that they have had to endure and will endure during the foreseeable future has put great strain on the country. Even with this strain, the attitude remains that there is no going back, that they are independent and will remain independent. There have been some discussions however that indicate that certain severed economic relationships with other Republics will once again be renewed. These relationships may be vastly different than they were in the past, but they will draw the Republics together for at least economic reasons.

The changes in the economy and government in the former Soviet Union have greatly affected fuel availability. The main fuels for thermal and electric production are natural gas, coal, heavy fuel oil (also called mazout and similar to number 5 fuel oil), and nuclear energy . The Ukraine must import natural gas and crude oil (which is refined in the Ukraine into heavy fuel oil), but it has large coal deposits. Again, 1990 data suggests Ukraine imports about 75% of its natural gas, 90% of its crude oil, and imports no coal. However, in 1991 the coal miners were on strike, and since then, coal production has continued to be low. Environmental issues compound the fuels issue, since coal and heavy fuel oil are less desirable fuels because of their emissions. Heavy fuel oil has a high sulfur content, which contributes to acid rain. Coal, in addition to the particulate matter, also has a high sulfur content. Nuclear energy was the preferred fuel in the Ukraine for several years, during the late 1970s and the early 1980s. But the accident at Chernobyl has changed that, and although it is a clean fuel, nuclear energy is no longer considered the preferred fuel. By process of elimination, this leaves natural gas as the preferred fuel.

Figure 3. Simplified Organizational Chart

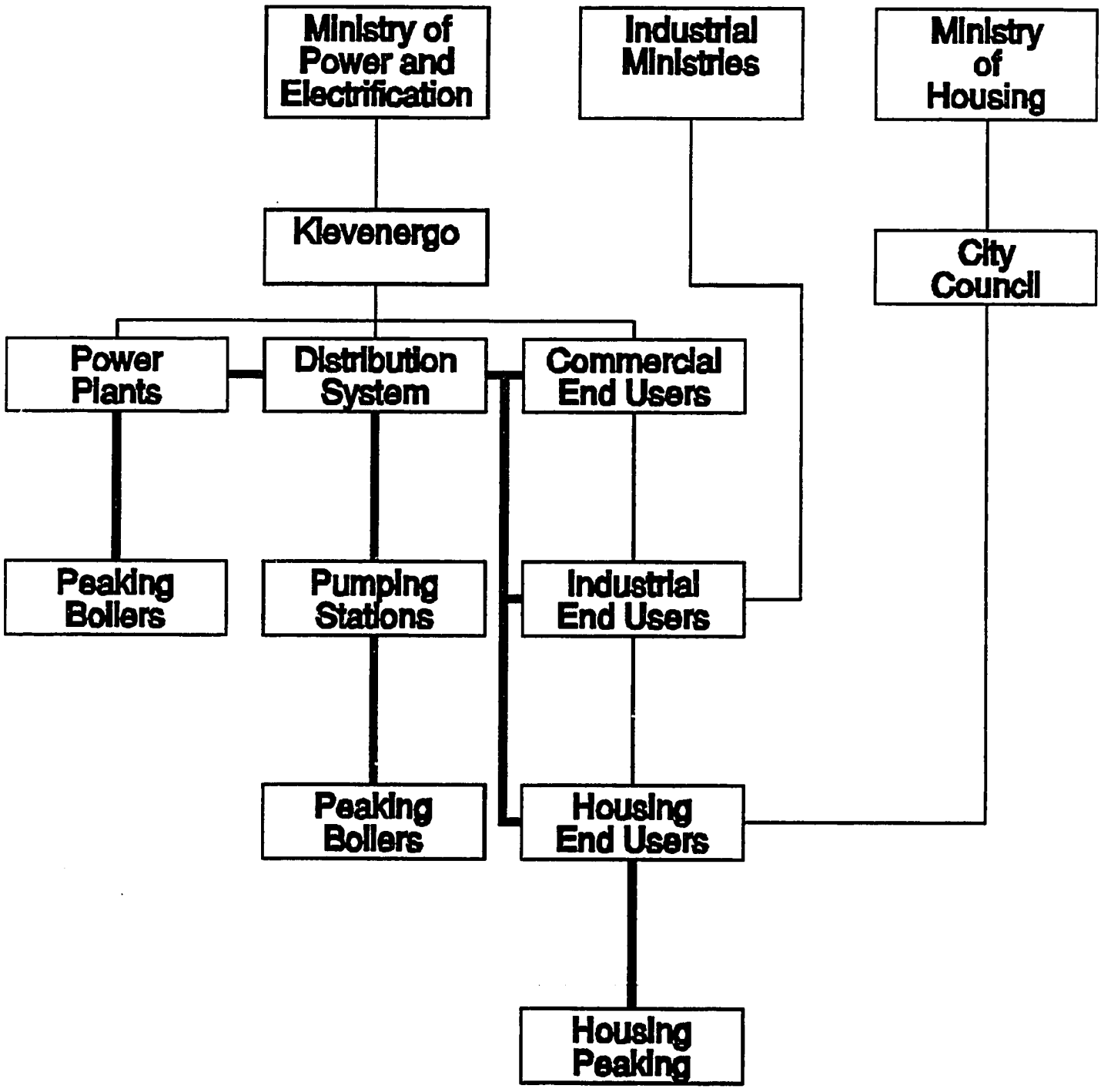

Many of the power plants were designed to burn either natural gas and/or heavy fuel oil. For these plants, the preference is to burn natural gas. This is especially true for the plants in heavily populated areas where emissions can be a major problem. However, the Ukraine must import almost all of its natural gas from Russia and Turkmenia. Recent shortages of natural gas have required more heavy fuel oil than normal to be consumed. Since the heavy fuel oil is also imported, most of the power plants within the Ukraine are basically dependent on outside sources for fuel.

In general, the consumption of fuels for the Ukraine is:

48% to 50% natural gas;
33% coal; and
17% heavy fuel oil.

The following information is taken from a special report entitled "The Oil & Gas Potential of the Commonwealth of Independent States; The Bearing on Energy Investments" from the Sayre Energy Review dated April 2, 1992:

> "A recent issue of the Moscow business weekly 'Ekonomika i Zhizn' (Economics and Life) concludes that Russian oil production (90% of total C.I.S.), will fall to a 1992 level of only 8 million to 8.2 million barrels per day. This is substantially below consensus estimates of 9.2 million barrels/day, and could lead to net oil imports by the C.I.S. in 1993. This would constitute a major surprise compared to very recent expectations, and could move oil prices upward as soon as the fourth quarter of 1992. However, the reliability of this report raises questions. The Russian authors are representatives of the State Academy for Administration and an aggressive commodities trader. The insights on production though are excellent.
>
> A result of declining production was a 52% decrease in C.I.S. crude oil exports for 1991, and an 18% decrease in refined product exports. Indeed, Russia which represents 90% of C.I.S. oil production has reduced exports to the other C.I.S. members to a point where they are turning to the Middle East for supplies. Ukraine was hardest hit as 800,000 barrels/day promised was delivered as 120,000 barrels/day and shortages of heavy fuel oil caused power plant blackouts in some cities. As a result, the Ukraine is now importing Iranian natural gas, and proposing new pipelines to be completed by 1995.
>
> In summary, the current situation is a decline rate that matches natural uninhibited oil well decline, implying little if any positive production management and technology. It would appear that there is at least as great a chance for C.I.S. supplies to decline worse than expected as there is for Iraqi oil to return to market."

It is obvious from this report that oil will have to come from foreign markets. This will force the Ukraine to purchase more and more of its oil needs at existing world prices, which are still substantially higher than their current prices.

1.3.2.3 Hot Water

The thermal distribution system provides heat for potable water as well as space heat to the city. The thermal water flow is reduced from approximately 90,000 m^3/hr in the winter to 30,000 m^3/hr for potable water in the summer. Water is provided by means of heat exchangers in each building or group of buildings. Domestic water is typically circulated within the buildings at 60 °C, after being converted from the central distribution system. The temperature of the centrally distributed water varies over the course of the winter, up to a maximum of about 130 °C. In the summer, the temperature is typically 60 °C (by regulation, the discharge is not to be below this value).

1.3.2.4 Electricity

Of the total 295.3 billion kWh of electricity produced in the Ukraine in 1989, just under 10% (27.7 billion kWh) was exported to Eastern European countries. The breakdown of electric power within the Ukraine is roughly divided into four main users:

Table 6. Electric Users in the Ukraine

Category	Percentage of Total
Industry, civil engineering and transportation	76.9
Agriculture	8.6
Public Services	6.1
Residential	8.4
Total	100.0

Growth in electrical generating capacity in the Ukraine has increased from a total of 43,900 MW in 1980 to 56,600 MW in 1989 (a 28.9% growth rate over nine years). The total annual production of electricity in the Ukraine has risen from 236.0 billion kWh in 1980 to 295.3 billion kWh in 1989 (a 25.2% growth rate over nine years).

The Ukraine has three main types of generating plants:

1. Heat/power plants;
2. Hydro plants; and
3. Nuclear plants.

Prior to 1978, there were essentially no nuclear plants in the Ukraine. However, the Ukraine was experiencing a rate of growth averaging over 4% per year in electrical demand. To meet this demand, construction of nuclear plants began, since nuclear energy was seen as the preferred power source throughout the USSR. This growth continued throughout the 1980s (see *Figure 4*), resulting in a total of five nuclear plants in the Ukraine today.

Figure 4 clearly shows the growing dependence on nuclear energy, with 2.4 million kW of capacity in 1980 to 13.8 million kW of capacity in 1989. This trend was dealt a serious blow when the catastrophe at Chernobyl occurred. While nuclear energy is no longer considered the preferred type of power generation by many of the authorities, there is not a clearly stated policy as to future development of nuclear energy. Since nuclear energy is administered and controlled by another Ministry, it is assumed that there will be a power struggle between these two Ministries regarding the future of electrical generation. The existing nuclear units are still in operation and will remain so (with the exception of reactor #1 at Chernobyl, which is in the process of being shut down).

The Ukraine has for years been an exporter of electrical energy, and wants to retain this role. However, some of the countries to which they have been exporting are trying to become independent of outside power sources. This may affect the economy of the Ukraine in the long run, since they hope to export this electricity for hard currency.

1.3.3 Costs and Sales Prices

Seventy-five million metric tons of specific or conventional fuel (525 x 1.0^{12} kcal or 2.08 x 1.0^{15} BTUs) were consumed in 1991. But shortages in heavy fuel oil and natural gas, plus the coal strike, have left the fuel situation uncertain. The shortages, coupled with the economic and political upheaval, have contributed greatly to the confusion. The following table indicates fuel prices and the percent increase between 1991 prices and prices as of April 1, 1992.

Table 7. Fuel Prices

Fuel	1991	April 1, 1992	Percent Increase	Equivalent Cost in $ U.S.	World Price $ U.S.
Natural Gas R/1,000 m^3	330	1,600-2,000	445%	15-19	134.55
Coal R/metric ton	27-35	2,500	8,233%	23.8	88.33
Heavy fuel oil R/metric ton	70	2,600	2,543%	24.8	138.69

Figure 4. Ukraine Generation of Electric Power

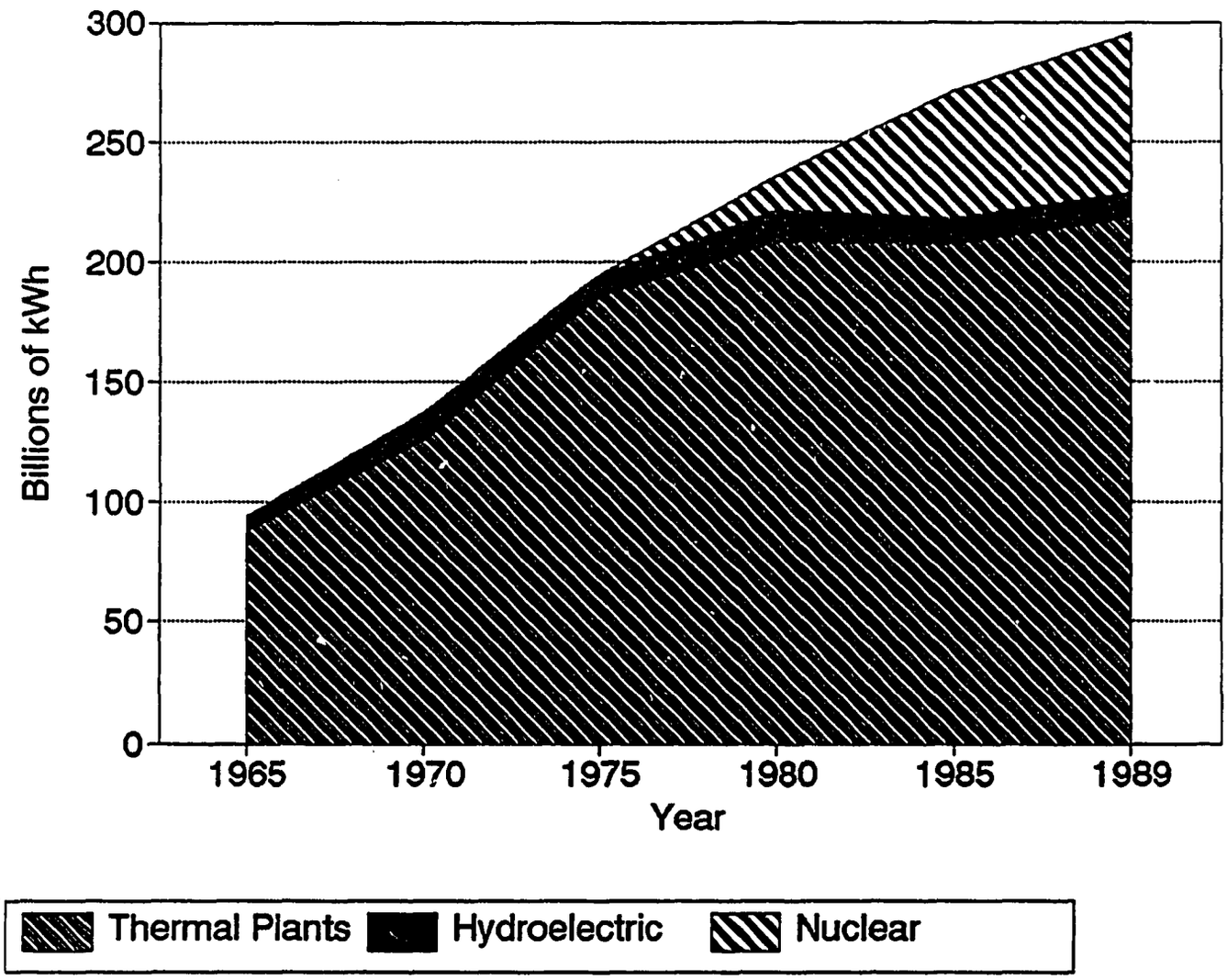

The heavy fuel oil price is expected to rise to 6,000 - 8,000 rubles per metric ton. The Ukraine consumed 55 million metric tons of heavy fuel oil in 1991, but Mr. Yeltsin has signed a quota of 40 million metric tons for 1992. Since the Ukraine is currently consuming more heavy fuel oil than it has in the past, due to the shortage of natural gas, the fuel picture becomes more uncertain. One result of independence was that those Republics with the natural resources were in a position to set their own prices. Turkmenia is doing just that with natural gas, causing a major problem for the Republics that are dependent on importing natural gas. Approximately 30% of the natural gas consumed in the Ukraine comes from Turkmenia. Turkmenia has increased its price to 2,000 R/m^3, while Russia is maintaining its price at 330 R/m^3. This price difference is expected to be settled in the near future, but for now is undecided. In the meantime, there is no gas delivery from Turkmenia. The Ministry of Power and Electrification feels that there will be an intergovernmental agreement on the natural gas prices in the future, but for now the issue continues.

In March, 1992, the Ministry of Power and Electrification was divided, creating the Ministry of Economy. One of the responsibilities of this Ministry will be to try to balance the fuel needs with the production requirements. In addition, the Ministry of Power and Electrification is working with the World Bank to try to establish natural gas prices. The Ministry of Finance also has a section that is responsible for determining fuel prices.

As can be seen in *Table 8*, the cost of heat and electricity has risen substantially since 1990. However, as can also be seen, the current prices are still far below world price levels. The price increases have come as a shock to most people, since salaries have not kept pace with these changes. To ease the impact of these changes, the Ministry of Economy has levied the burden of the price increase on industry, reasoning that the industrial sector can more easily absorb the price increases than the general population. These prices will eventually be passed on to the public in the rising price of consumer goods. This procedure of levying the burden of the increases on the industrial sector may make the overall increases on the general population less difficult to absorb. However, there is also the potential that the public will reduce their overall spending if industrial and commercial prices rise too high too quickly. The overall economy is affected, either directly or indirectly, by the rising fuel costs.

Table 8. Kievenergo Tariffs
Thermal Heat (R/Gcal)

Category	1990	1991	1992	World Price
Industrial	12.098 (0.115)*	19.871 (0.189)	2,057.37 (19.59)	3,125 (29.76)
Commercial	12.021 (0.114)	15.518 (0.148)	907.57 (8.644)	3,125 (29.76)
Residential	7.122 (0.068)	12.822 (0.122)	42 (0.4)	3,125 (29.76)
Electrical (kp/kWh)				
Industrial	2.289 (0.000218)	4.114 (0.00039)	228.23 (0.0217)	670.14 (0.064)
Commercial	2.309 (0.00022)	3.812 (0.000363)	131.42 (0.0125)	670.14 (0.064)
Residential	2.632 (0.00025)	2.828 (0.00027)	12.28 (0.0012)	670.14 (0.064)

*Values in parenthesis are dollars per unit shown, based on a current exchange rate of 105 rubles per one U.S. dollar.

Already the public has been complaining about the price increases for the residential sector. People have been inquiring about reducing energy costs when they are paying their monthly bills. Currently the only choice is to reduce consumption of electricity by turning off lights and appliances, etc.

1.4 Environmental Impacts

The location of many of the power plants and peaker units affects the selection of fuels for the plants. Since many of the plants (especially the thermal heat plants) are located in or around metropolitan areas, their exhaust impacts on the general population. Because the exhaust gases are visible to population, the plants are pressured to utilize the cleanest burning fuels available. This is especially true in the Kiev area, where the plants are trying to burn only natural gas. However, natural gas is not always available, and so heavy fuel oil is used to make up the difference.

There are now environmental regulations regarding the discharge of sulfur oxides into the atmosphere. The power plants pay a fee for the discharge of sulfur, ash and nitrous oxides, and a penalty when the discharge of these pollutants exceeds the established standards. Nitrous oxides are produced whenever the plants operate, but heavy fuel oil is virtually the

only source of sulfur and ash. The restrictive emission limits require that a penalty be paid if more than a relatively small percentage of heavy fuel oil is burned.

The level of emission limits is set by a complicated procedure which is a combination of regulation and negotiation. The plant proposes a limit to the city council, which has authority for the area the plant is located. The city council may accept or modify the plant's proposed limit. Once the limit is established the plant then pays a fee based upon the limit value, whether they actually emit that amount or not. However if the plant exceeds the established limit, they pay an extra penalty proportional to the magnitude of the excess. The fees and penalties are assessed based upon the following equation:

$$\text{penalty} = (\text{Hlim} * \text{Mlim}) + (\text{K1} * \text{Hlim} * \text{Mexc}) * \text{Kt}$$

where:

Hlim is the cost for the specific pollutant limit in rubles
Mlim is the negotiated limit value for each pollutant
K1 is a constant between 1 and 5 established by the city council
Mexc is the amount over the negotiated limit value for each pollutant
Kt is a combination of KHac times K
KHac is a published regulation value dependent upon the area population (between 0.45 & 1.80)
K is a published regulation value dependent upon the social structure of the area (between 0.6 & 1.65)

The values of Hlim are:

for Ash: 295 rubles/metric ton
for SO_2: 160 rubles/metric ton
for NO_x: 495 rubles/metric ton

The stations have no equipment installed to measure environmental emissions. Rather they rely on functional relationships between fuel analysis and operating parameters to report the emission levels. The emission value of sulfur oxides is computed based on the metric tons of heavy fuel oil burned and the sulfur content of the oil. Similarly, the amount of ash generated is based on the metric tons of oil burned and the ash content of the oil. Nitrous oxide emissions are a function of the average steam flow, metric tons of oil and gas burned, excess air, and other operating parameters which may be known to effect the production of nitrous oxides.

1.5 Audit Methodology

The audit activities included the collection of information and data from various reference sources and individuals working within the district heating system(s). The activities are of two sorts: one for specific audit measurements and calculations, and the other for information of a general nature regarding the systems being discussed and observed.

1.5.1 Specific Audit Activities

In preparation for the audit activities in the Kiev area, technical energy monitoring equipment was purchased in the United States and taken to Kiev. The main components of the equipment are:

- 1 Portable Combustion Analyzer;
- 1 AC Power Analyzer;
- 1 Heat Spy (infrared temperature monitor);
- 1 Laptop Computer;
- 1 Air Temperature and Pressure Meter;
- 1 Multimeter; and
- 1 Digital Thermometer.

The equipment was purchased to monitor and to make measurements of various systems that were likely to be encountered within the district heating systems. The measurements enabled auditors to learn specific information about the systems being investigated. Based on the measurements, the auditors calculated energy consumption and potential energy improvements that could be gained by installing energy efficiency equipment. Economic paybacks were calculated and the items prioritized according to the shortest paybacks. Based on estimated cost of equipment and money available, recommendations were then made as to whether to implement the items studied.

1.5.2 General Audit Activities

Information was gathered from existing sources, plant historical operating data and discussions with key personnel. Actual audit activities consisted of taking operating data and test measurements wherever possible and performing analysis based on this data and historical information. In addition to the RMA energy team, representatives from Joseph Technologies (district heating specialists) and Honeywell (controls system specialists) accompanied and advised the team.

2.0 Description of Facilities

2.1 Heat Production

2.1.1 History

TPS #5 first went on line in 1971, but the plant was not fully operational until 1974. The facility has an electrical capacity of 700 MW and a thermal capacity of 1,756 Gcal. The electrical capacity can be raised to approximately 840 MW if heat is not being produced.

2.1.2 Management & Organization

Overall responsibility for TPS #5 is the duty of the Plant Director. The Chief Engineer reports to the Director and supervises the heads of the following departments: Industry; Boiler & Turbine; Instruments and Heating; and Operating. The plant employs approximately 700 employees.

2.1.3 End-Users/Customers

The plant delivers hot water to the distribution entity known as Teploset. Once the hot water for the heating system leaves the physical site of the plant, it becomes the responsibility of that department.

2.1.4 Generating Equipment and Capacity

TPS-5 has a total of four units, plus three peaking water boilers. Data on TPS-5 is listed in *Table 9*.

Table 9. Thermal Power Station (TPS) #5

Boilers	Units I & II	Units III & IV
Steam Capacity (metric tons/hr)	480	1,000
Main Steam Pressure (MPa)	13.7	22.1
Main Steam Temperature (°C)	560	545
Feed Water Temperature (°C)	230	265
Turbines		
Electrical Rated Power (MW)	100	250/300
Rated Heating Power (Gcal/hr)	160	330
Generators		
Electrical Rated Power (MW)	120	320
Voltage kV	10	20
Excitation Type	High Frequency	
Cooling	Hydrogen (Rotor), Water (Stator)	
Peaking Plants	Peaker no. 1, Peaker no. 2, Peaker no. 3	
Total Rated Thermal Capacity	1,821 Gcal/hr	

All units were designed to burn both heavy fuel oil (mazout) as a primary fuel and natural gas as an alternative fuel. Due to environmental concerns regarding sulfur dioxide emissions, the plant burns only natural gas when it is available because of the high sulfur content of the fuel oil (approximately 2.5%). The average heating value of the fuels is given in *Table 10.*

Table 10. Heating Value of Fuels

Heavy Fuel Oil (1990 and 1991)	
Highest Energy Content	9,691 kcal/kg
Lowest Energy Content	8,742 kcal/kg
Natural Gas (1990 and 1991)	
Average Energy Content	7,959 kcal/kg

The plant provides heating system hot water by means of two heat exchangers per unit. Heating system return water is received by the plant at a pressure of approximately 2.1 atm. The pressure is raised by means of first stage pumps and then passes in series through each unit's dual heating system heat exchangers to the suction side of the second stage pumps. Here the pressure is raised for delivery to the distribution system at around 20 atm. Depending on the load of the system, this water may be sent to the peaking stations to further raise the temperature.

Each of the four units has three first stage and three second stage pumps. The first stage pumps of Units I and II are rated at 2,500 m^3/hr and the first stage pumps of Units III and IV are rated at 5,000 m^3/hr. All four units share a common suction and the discharges of Units I and II first stage pumps may be tied together. Similarly, the discharges of Units III and IV may also be tied together. The water is heated by both of each unit's heating system heat exchangers which provide suction for the second stage pumps. The suction of the second stage pumps for the entire plant may be tied together. The ratings of the second stage pumps for each unit are the same as for the first stage pumps. The pressure is boosted to approximately 3 - 8 atm by the first stage pumps and raised to approximately 20 atm by the second stage pumps. If required the temperature may be raised further by the peaking boilers, or the water may be directed to the heating system.

The source of heating energy for the heating system heat exchangers is from 8th and 9th stage extraction points from the middle pressure turbine. The drains from these heat exchangers are pumped into the condensate line between the lowest and second lowest pressure feedwater heaters, and between the second and third lowest pressure feedwater heaters. Steam is directed by a variable area diverting device either through the turbine or to the heat exchangers depending on the demand for electrical versus thermal power. The heating system heat exchangers have stainless steel tubes. Plant personnel feel they do not have problems with fouling.

The boilers of the first two units are water-table drum type units with no reheat. They are fired either on heavy fuel oil or natural gas. There are eighteen burners on the front face of the boiler. The burners are combination gas and oil with the oil admitted through the

center of the burner and natural gas around the outside radius of the oil nozzle. Both the oil nozzle and gas nozzle are in a circular recess from the furnace wall around the outside of which air for combustion is admitted. There are no dampers or vanes to balance the air flow between burners.

Fuel flow measurement is accomplished by means of a simple orifice and differential pressure measurement instrument. Both units are equipped with flow instruments. However, all four units share a single instrument on the main return line.

The furnaces are balanced draft with combustion air supplied by and exhausted by centrifugal fans. The units are equipped with regenerative air heaters. They also have a steam air preheater to raise the cold end temperature when firing heavy fuel oil. Because of the high sulfur content of the heavy fuel oil, they have experienced problems with corrosion of air heaters and fans. There are two fan/air heater sets per unit. The fans exhausting the boilers can be operated at two different speeds depending on load. Additional control is by means of inlet vanes on both these fans and the fans providing air to the furnace. Flue gases are exhausted into a 180 meter stack. The units are equipped with extractive type flue gas oxygen instrumentation with two sampling points per duct. The oxygen sample points are between the flue gas superheater outlet and flue gas economizer inlet. The boilers are equipped with automatic combustion controls for fuel demand, furnace draft and excess air control. The units are also equipped with carbon monoxide instruments which provide an alarm upon excess values of carbon monoxide.

The boilers of the other two units are once through, direct flow, super critical boilers with single reheat. The boilers of these units have sixteen combination oil and gas burners split evenly between the front and rear face of the furnace. In the design of these burners, the fuel oil nozzle occupies the center of the burner. Gas also is admitted around the outside diameter of the fuel oil area and from the inside diameter of another ring located around the entire burner. Air is admitted in the annulus formed by the two gas admission rings. Manual dampers to balance the air flow and modify the air flow direction are used on these burners. The fuel flow instrumentation on the units is the same as described on the first two units.

The furnaces are balanced draft with combustion air supplied to the furnace by centrifugal fans and exhausted by axial fans into a 180 meter stack. As on the first two units, air flow control is by means of fan inlet vanes and two speed fan control on the fan exhausting the furnace. The units are equipped with extractive oxygen and carbon monoxide instrumentation. The sample point for these instruments is between the flue gas outlet from the reheater and the flue gas inlet to the economizer. The units are equipped with automatic combustion controls for fuel demand, furnace draft and excess air control. Gas recirculation fans are provided on these units as a means of reheat steam temperature control.

Units III and IV also have a steam preheater used to raise the air temperature when firing heavy fuel oil. Because of problems with obtaining sufficient air flow on unit III, an air

bypass was constructed around this element to eliminate the added air flow resistance when it is not in use. A similar bypass is planned for unit IV.

The steam cycle diagrams for Units I & II are shown in *Figure 5*. These units have high, intermediate and low-pressure turbines. The extraction steam is drawn from the intermediate pressure turbine. The exhaust from the low-pressure turbine is condensed in a surface condenser which receives its circulating water from the Dnieper River. The condensers have a separate section used to preheat the returned heating system water. At times, this water can provide 100% of the condensing requirements of the units. Station personnel said they have some problems with biological fouling and with zebra mussels. Hydrogen cooled generators produce power at 10 kV.

In addition to the heating system heat exchangers, there are eight regenerative feedwater heaters operating on extraction steam from the turbine. The low-pressure heaters have copper alloys, the high pressure have steel. Four low-pressure feedwater heaters receive steam from the intermediate pressure turbine. The drains of the lowest pressure of these are returned to the condenser. The next two have their drains pumped forward into the their respective condensate lines. The fourth low-pressure heater drains cascade back to the third. A derating heater accepts condensate from the low-pressure heaters and provides suction to the motor driven boiler feed pumps. There are three stages of high pressure feedwater heating each of which have their drains cascading back to the next lowest pressure heater.

The steam cycle diagram for Units III and IV is shown in *Figure 6*. These units have high, intermediate, middle and low-pressure turbines. The station has experienced problems with the foundations of these turbines during start up of the units because of lack of rigidity. The extraction for the heating system heat exchangers is from the eighth and ninth stage turbines. The exhaust from the low-pressure turbine is condensed by surface condensers which receives its circulating water from the Dnieper River. The Unit III and IV condensers do not have the heating system preheat sections. The same fouling problems as on the smaller units apply to Units III and IV as well. Hydrogen cooled generators produce power at 20 kV.

In addition to the heating system heat exchangers, there are nine regenerative feedwater heaters operating on extraction steam from the turbine. Five low-pressure feedwater heaters receive steam from the intermediate, middle and low-pressure turbines. The lowest pressure feedwater heaters are returned to the condenser. The next three low-pressure heaters have their drains pumped forward into the condensate lines. The fifth low-pressure heater drains cascade back into the fourth. Deaerating heaters accept condensate from the low-pressure feedwater heaters and provide suction for the combination steam and electric boiler feed pumps.

Figure 5. Units 3 & 4 Steam Cycle

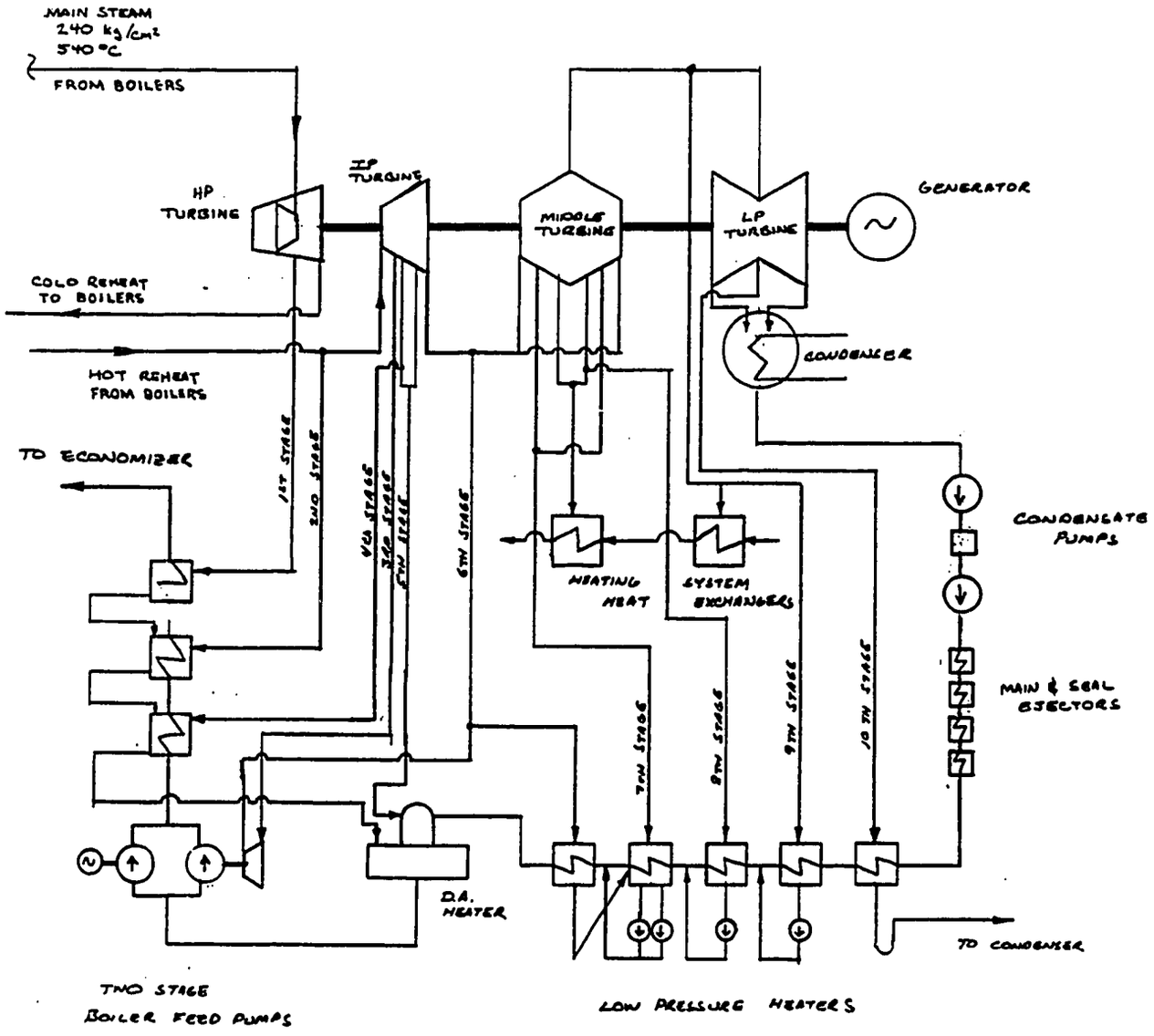

Figure 6. Units 1 & 2 Steam Cycle

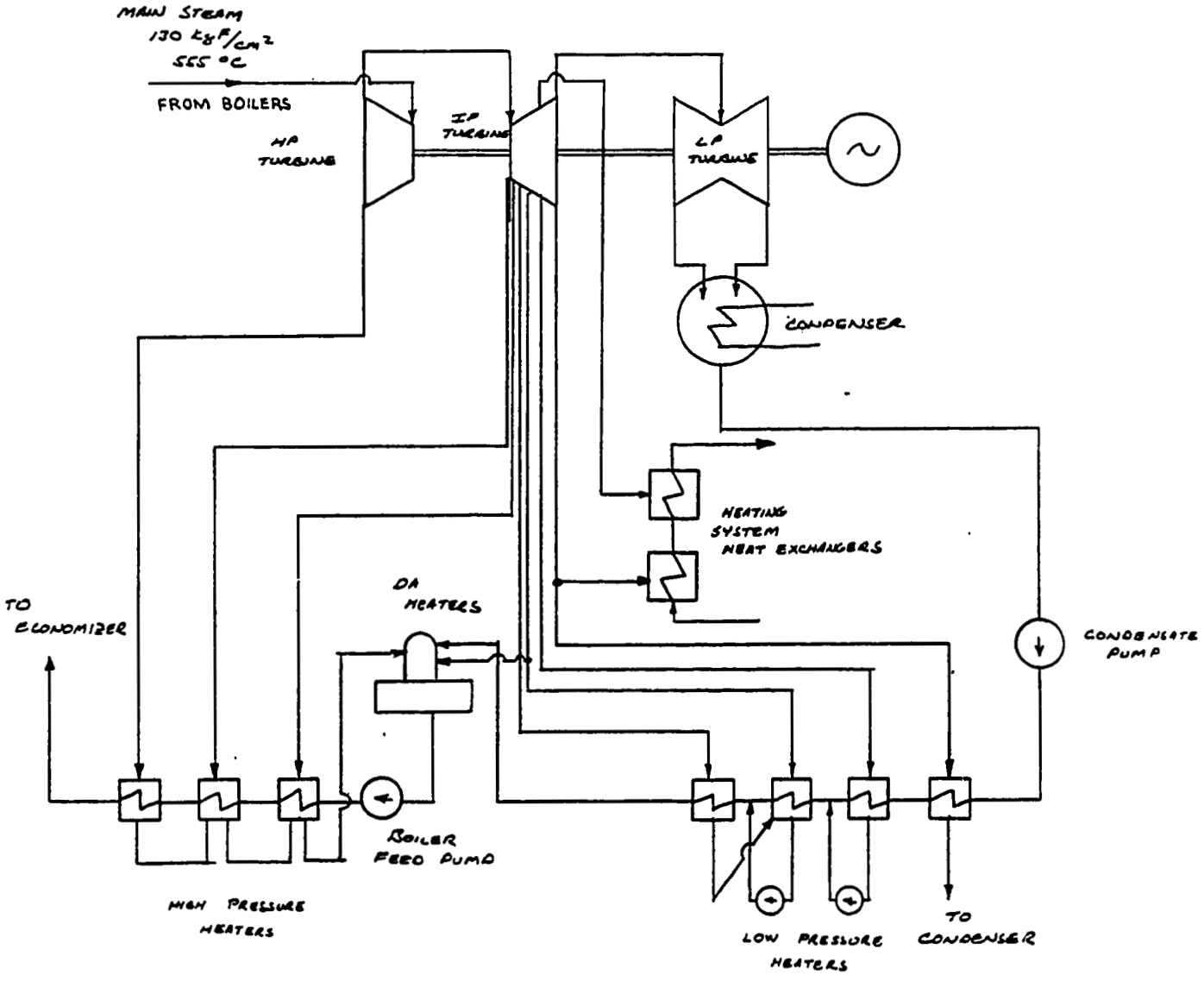

Three high-pressure feedwater heaters use steam from the high and intermediate-pressure turbines and have their drains cascading back to the next lowest pressure heater. The low-pressure heaters have stainless steel tubes, the high-pressure heaters have carbon steel tubes.

Units I and II are on a common phosphate, hydrazine and ammonia boiler water chemistry program. Units III and IV, however, are on an oxygenated water chemistry program. In this scheme, instead of deaerating and scavenging the oxygen from the water, high levels are introduced to it. This causes an oxide layer to form on the tube surfaces, thereby reducing further corrosion. This technology was developed in the former Soviet Union and is now being tried in the United States. The units have been on this chemistry program since 1977. The peaking units are hot water boilers which boost the temperature of the heating system water when required. These units have 20 gas or oil burners each. Each burner has its own fan in service whenever that particular burner is in use. There is no other means of air flow control. Fuel pressure is controlled in response to load changes as well as starting or stopping additional burners. The furnaces are separated into three sections with screen tubes separating each section. The sections are reunited at the top of the furnace and all three peaking units flues combine into a common duct exhausting into the stack of units I and II.

These boilers have experienced tube pluggage problems due to the intermittent nature of their operation and the water quality of the district heating system.

2.1.5 Operations and Maintenance

It is impossible to fully document detailed information on the operation of a facility as large and complex as TPS-5. Included here is general information and particular items that were emphasized by the plant management in our conversations with them.

Loading of the units is as per a heating system dispatcher. This dispatcher sets the required target temperature. The targets for temperature and pressure for the district heating system water are based on a schedule which has been developed by experience and indexed to the outside air temperature.

To maintain combustion efficiency, operators have an index of flue gas oxygen set point dependent upon the load of the unit. The normal oxygen levels at full load are about 1.1% when firing natural gas and about 1.8% when firing heavy fuel oil. Operators also have carbon monoxide instrumentation with alarms that indicate excess carbon monoxide. Excess CO_2 means inefficient combustion is occurring.

Like plants world-wide, the staff places high priority on maintaining high availability of the system. The interconnection of the suction and discharges of the pumps and heat exchangers allow flexibility for the station personnel to remove equipment from service and still meet the demand of the system.

Normal practice is to have one overhaul on each unit per year. Typically the outages last from two to four weeks. During the audit, Unit I of TPS-5 was being overhauled. Work at this time included major retubing of the boiler and condenser.

2.1.6 Energy Efficiency Measures Implemented

The units are efficiently designed. All units in the plant use many stages of regenerative feedwater heating. Units III and IV are of a super-critical design. Super-critical designs are considered to be the most efficient steam rankine-cycle based systems available.

Performance tests for boiler efficiency are based on the level of excess air and on the ambient and stack temperatures. Station personnel periodically compute efficiency based on data from station instrumentation. Efficiency is also calculated based on measured fuel burned and electrical and thermal energy produced.

During discussions with the plant personnel, they identified the following operating problems as deterrents to their energy efficiency improvement efforts:

- Inability to accurately measure the flow of natural gas and heavy fuel oil into the plant.
- Lack of confidence in and frequent maintenance of the excess oxygen measuring instruments.

2.2 Thermal Distribution System

Central heating distribution in Kiev is provided by Kiev Heat Distribution Enterprise (KHDS), commonly called Teploset. This is an agency within Kievenergo that is responsible for delivering the heat to the end-user. Teploset is separate from the three thermal power plants in Kiev, but this agency also has nine boiler plants that are connected to the system to help provide the appropriate heat. The nine boiler plants consist of two former power plants (these now only produce heat and not electricity), and seven district heating plants that are referred to as peakers (this term peaker is used differently than in the United States, since these plants typically operate year around, not just during the "peak" period).

2.2.1 History

Electricity production began in Kiev in 1892, when the first electric tram was put into service. In 1896, a 16 MW central power station was constructed. In 1917, the capacity of the plant was increased to 19.7 MW. The first five year plan began in 1930, with the construction of the first stage of the 20 MW power plant that became known as power station #2. In 1932, the organizational structure known as Kievenergo began, and in 1935 this authority was extended regionally. In the early 1940s, power station #2 was expanded and power station #3 built. Capacity rose to 99 MW. During World War II, all of the power stations and substations, and most of the transmission lines and heat mains were

destroyed. After the war the system was re-built and greatly expanded. Additional power plants were added to meet the needs of the growing population and industry.

2.2.2 Management and Organization

The Ministry of Power and Electrification has the responsibility for implementation of district heating systems in towns with a population greater than 100,000 people. In towns with a population less than this, the responsibility is in the Ministry of Housing. Kievenergo is subordinate to the Ministry of Power and Electrification, and is responsible for the development and implementation of district heating with Kiev and the region surrounding Kiev. Within Kievenergo, a particular agency is assigned this responsibility. This agency is typically known as Teploset. This agency is responsible for servicing and maintaining the distribution system.

2.2.3 Equipment and Capacity

Thermal energy or heat is supplied by Teploset throughout Kiev by means of an underground piping network. As of 1989, the distribution network consisted of piping from 50 mm (2 inches) to 1,200 mm (3.9 feet) in diameter. The length of the network main piping is 795 km (494 miles). Heat is pumped a maximum distance of 25 to 28 kilometers from the pumping station.

The location and layout of the city of Kiev causes certain problems for the thermal distribution system. The city is situated on both sides of the Dnieper River. The east shore is relatively flat, while the west shore is hilly. Additional pumping energy is required to overcome these elevation differences.

In addition, in parts of the city the ground water table is very high, and although the piping is situated in pipe tunnels, the piping many times is wet or very moist. The relative humidity in the piping tunnels has been estimated at between 60% and 70%. This high moisture condition causes severe corrosion problems, in addition to deteriorating the piping insulation. The piping insulation typically has a life expectancy of only seven years, while the pipe has a life expectancy of twelve years. Different design techniques have been attempted, such as the use of a vapor barrier type paint on the piping, and also an aluminum coating. These efforts have not been very successful.

The physical structure of Teploset includes two former thermal power plants as well as the seven peaker heating stations. These are identified in *Table 11*.

Table 11. Teploset Water Heating Stations

Name of Station	Thermal Capacity (Gcal/hr)
CT-1 (formerly thermal power plant #3)	570
CT-2 (formerly thermal power plant #2)	610
Nivki	150
Nikolskaya Borshagovka	400
Voskresenka	300
Belichi	300
Otradniy	200
Vinogradar	200
Molod	105
Total	2,835 Gcal/hr

These plants, along with thermal power plants #4, #5, and #6, comprise the production and distribution portion of Kievenergo. Of the above-mentioned plants, some of these are not interconnected into the central distribution system. These plants typically serve newer districts or suburbs of Kiev. Long-range plans call for the entire system within Kiev to eventually be interconnected, but for now some areas stand alone.

During the summer many of these plants do not operate, due to the decreased need for heat, i.e., only domestic water heating needs.

The Belichi peaking plant was identified as a typical district heating plant operated by Teploset. This facility is located on the western edge of Kiev. It is not connected to the main district heating water supply system, but rather forms a separate network with its own distribution system supplying the new development area. The plant was built in anticipation of continued expansion in the region, and as such, has a large amount of reserve capacity available. The station is approximately three years old and is one of two plants constructed of the same design.

The Belichi plant consists of three hot water boilers and two steam boilers. The plant is fired on either natural gas or heavy fuel oil. The hot water boilers heat the district heating supply water directly while the steam boilers are used to provide steam for heating heavy fuel oil when that fuel is being used. Plant data is listed in *Table 12.*

Table 12. Belichi Peaking Station Capacity

Three Hot Water Boilers	80 Gcal/hr
Two Steam Boilers	25 metric ton/hr (13 kg/cm^2 & 197 °C)
Make-up System Capacity	100 m^3/hr
Pumping Capacity	1,250 metric ton/hr

The plant serves a closed loop heating system and receives return water which is pumped to 14 atm and at the inlet to the boilers. The plant has eight water supply pumps. Make-up water is deaerated and heated in a vacuum deaerator scheme using hot water as the heat source. No chemical treatment is used on the heating supply water. The plant reports no problems with sediment in the boilers so far.

The boilers have three burners each on the front face of furnace. The boilers have instrumentation for measurement and control of flue gas oxygen levels. Each boiler has one forced draft and one induced draft fan. A central control room serves all three boilers. Typical oxygen levels at the furnace outlet are 5% - 7%.

The plant does daily calculations of efficiency based on fuel burned and thermal output. They have plans to install a computerized on line system to monitor this. Plant personnel think this will be available sometime in 1993.

2.2.4 Dispatcher

Authority resides within the distribution system to determine the amount of heat that the district heating system requires at any one time. A central dispatcher monitors the system and the outside air temperature. The heat load of the system has been theoretically calculated at 7,576 Gcal/hr (30.06 x 10^9 BTUs/hr) at the outdoor design condition of -22 °C (-7.6 °F). The dispatcher determines the outdoor temperature, and then based on a temperature chart, determines what the district heat supply temperature should be. The district heating system is designed to supply 150 °C, but in reality only supplies a maximum of about 130 °C (about 120 °C without the power plant peaker boilers operating). The dispatcher notifies the power plant and the boiler plant operators what temperature they are to produce, and they are required to follow those directions. This relationship is detailed in a document called the "Statement on Relationships Between District Heat Supply Enterprise and Thermal Power Plants #4, #5, and #6 at Producing and Consuming Heat Energy".

2.2.5 Operations and Maintenance

Heating water is supplied year round, with quantities ranging from approximately 90,000-95,000 m^3/hr in the winter to approximately 30,000 m^3/hr in the summer. Since the need is much lower in the summer than in the winter, the production is obviously also much lower. This lower production enables many of the thermal production plants to be shut down in the summer.

During the summer, the distribution system is tested for leaks and necessary repairs are made. Typically 400 - 500 repairs are made annually, and in 1991 a total of 510 repairs were made. These repairs take the majority of the summer (May to October) to complete, and also require considerable personnel time and cost. In addition, portions of the distribution system need to be shut down to implement the repairs, which interrupts the flow of heat to buildings. Without the heat, the buildings do not have any capability to produce domestic hot water.

Despite the severe corrosion problems facing the distribution system, water losses are relatively small. On average, the losses are estimated at 1,200 to 1,300 m^3/hr. This water comes from the Dnieper River, and is treated prior to entering the system.

In the past, aerial thermography has been used to help survey the district heating system for leaks. This process is very expensive and apparently does not produce significant results.

2.2.6 Energy Efficiency Measures Implemented

There have been some energy efficiency or conservation ideas introduced into the electrical side of the system over the past few years, but relatively nothing in the thermal energy or heat side. These electrical devices include power factor correction and adding customers to the billing records who previously did not show up on the billing roster. The potential exists for a number of measures to be introduced into the district heating side, such as flow control devices, heat meters, pressure control, etc. Although these devices are known to the operators, they have not been readily available in the past. The lack of hard currency also will mean that the wide spread use of such devices is still many years in the future.

2.3 End-User

2.3.1 Industrial

2.3.1.1 History

Industrial facilities have been controlled by the government for many years, with various Ministries responsible for the management and production of the factories. These Ministries controlled the energy use of the facilities, and were responsible for paying for the consumption of energy used within the plants. Little attention appeared to be paid to how much energy was actually consumed in the plants. Emphasis was always placed on plant production, and any funds available from the Ministry would be spent on increasing production.

As indicated, the Ministries that control the industries are separate from the Ministry of Power and Electrification. Where the Ministry of Power and Electrification was very open to assisting this USAID project, access into the industries was much more closely controlled. Although permission was finally received, many more levels of approval were needed to allow foreigners into any industrial facility. Although no explanation was given, this was perceived to be a continuation of previous thinking and policy.

A book printing and binding facility was selected by the Ministries for our visit. This was apparently due to the fact that the book facilities are considered less of a security risk than other types of manufacturing. The facility, called the Kiev Book Factory, is one of three book printing and binding facilities in Kiev. The facility is moderately sized, with a building volume estimated at 63,672 m^3. Until recently it was part of the Republican Industrial Amalgamation, which tightly controlled the printing industry. Currently it is part of the "Polygraph Book" Amalgamation, which gives the individual facility more control and responsibility over its day to day business.

Energy consumption for this facility is shown in *Table 13*. Previously the facility was under the control of the Amalgamation and all of their energy bills were paid directly by the Amalgamation. Consequently the plant operators do not have any idea about the cost of the energy consumed by the plant.

Several interesting facts can be seen from the data in *Table 13*. First, the data for the months of May to September is the same, 50 Gcal per month. This consumption is attributed entirely to domestic water heating, with space heating within the district heating system officially curtailed as of May 1, and resuming again on October 1. Subtracting 50 Gcal per month from the monthly data leaves a total annual heating value of 2,826 Gcal, or 0.044 Gcal/m^3 of building volume.

Also, the domestic water heating is the same for each month, not due to mere coincidence but to the fact that the domestic water heating energy is not measured, but rather estimated. This is a theoretical calculation that is used to determine the monthly energy usage.

Table 13. Annual Energy Consumption, 1991
Kiev Book Factory

Month	Consumption (Gcal)
January	492
February	568
March	423
April	364
May	50
June	50
July	50
August	50
September	50
October	423
November	444
December	462
Total	3,426

According to the building operators, the typical calculation is:

Q = hourly energy usage x hours per day x days per month

These are predetermined estimates based on typical water consumption and hours of operation. The actual values that are used monthly for this facility are shown below:

Q = 0.25 Gcal/hour x 10 hours/day x 20 days/month

Q = 50 Gcal/month

There are many reasons to question the accuracy of this calculation. Since this particular plant operates two, eight hour shifts a day, the number of hours should be sixteen, not ten. The hourly consumption is also arbitrary, and since the water flow rate is not measured, it is extremely difficult to determine the accuracy of this value.

Although neither the energy nor the water flow rate for domestic water heating is measured, the district heating water flow rate and temperatures are measured for this facility. This is typically true of industrial customers, that the space heating energy use is measured. However, these customers represent less than 5% of the total district heating customers. Also, even though the flow rate and temperatures are measured, the data is collected manually on a daily basis by the building operators and recorded on a printed work sheet. This work sheet is then turned in to Teploset on a monthly basis, and this data is the basis for the monthly bill. The data that is collected is an instantaneous value, rather than a log of the past twenty-four hours of consumption. So the actual energy that is consumed is different from that which is billed. Even so, this system is better than the majority of the other customers, since for them there is no measurement whatsoever.

The general piping arrangement at the building entrance is shown in *Figure 7*. It should be noted that the piping serving the domestic water heating and the ventilation system are taken from the piping main upstream of the flow meters, so that energy going to these uses is not measured. This piping arrangement is typical for many hot water distribution systems for commercial and industrial buildings. New equipment recommended for this report measures only the heat flow for perimeter type space heating. The existing piping arrangement makes complete building heat use difficult to measure within the budget of this program. Future work will be needed to measure the energy consumed for total building energy consumption.

2.3.1.2 Tariffs and Regulations

Within the Ukraine, tariffs for both heat and electricity vary in accordance with many factors. Tariffs for industrial customers within Kievenergo, the regional authority, are shown below:

Table 14. Kievenergo Industrial Tariffs

	1990	1991	1992	World Price
Thermal Heat (R/Gcal)	12.098 (0.115)*	19.871 (0.189)	2,057.37 (19.59)	3,125 (29.76)
Penalty for Condensate Not Returned (R/metric ton)	0.63 (0.006)	1.08 (0.01)	N.A.	N.A.
Electrical (kp/kWh)	2.289 (0.000218)	4.114 (0.00039)	228.23 (0.0217)	670.14 (0.064)

*Values in parenthesis are dollars per unit shown, based on a current exchange rate of 105 rubles per one U.S. dollar.

Figure 7. Piping Arrangement

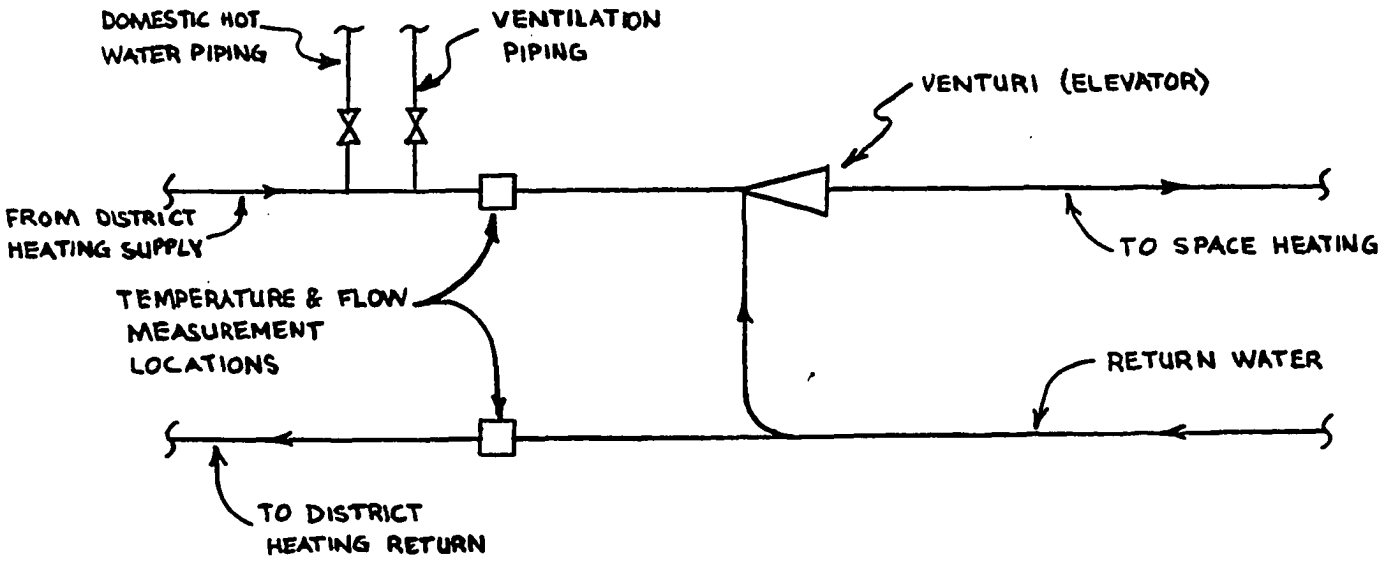

As can be seen from these figures, the cost of heat and electricity has risen substantially from what they were. However, as can also be seen, the prices are still far below world price levels. The price increases have come as a shock to most people, since their salaries have not kept pace with these changes. To ease the impact of these changes, the Ministry of Economy has levied the burden of the price increase on industry, with the reasoning that the industrial sector can more easily absorb the price increases than the general population can. These prices will eventually be passed on to the public in the price of rising consumer goods. This procedure of levying the burden of the increases on the industrial sector may make the overall increases on the general population less difficult to absorb. However, there is also the potential that the public will slow down or reduce their overall spending if industrial and commercial prices rise too high. So the overall economy is affected, either directly or indirectly, by the rising fuel costs.

2.3.1.3 Description of Systems

Heat energy is used in several different manners within the book factory. As previously mentioned, domestic water is heated from the district heating system. Space heating and ventilation air are also heated using district heating water. However, since the district heating water for the ventilation system is taken upstream of the venturi (elevator), it is not mixed with the return water to moderate the temperature as the space heating water is. Other than freeze controls, there are no temperature controls on the space heating or ventilation heating systems.

2.3.1.4 Energy Efficiency Measures Implemented

There have not been any energy efficiency improvements suggested or attempted in this facility. Energy conservation or efficiency improvements were not considered important, and still would not be important if it were not for the increasing costs. Also, since the facility is now directly responsible for its own costs, they are becoming acutely aware of the rising costs of energy.

2.3.1.5 Systems to be Audited

This facility is very similar to other types of users (see commercial and residential end-users) in the consumption of district heating energy. The major difference is that make-up air (ventilation air) is introduced into the facility to offset the air that is exhausted from the various printing processes. Since this consumption of energy is typically found in industrial operations, this system is the primary focus to be audited.

2.3.2 Commercial

2.3.2.1 History

The commercial sector within Kiev consists of many different types of facilities, all of which are typically connected to the heat and electrical distribution systems. These facilities have been served by the distribution system since the early 1900s, although the entire system had to be rebuilt after World War II.

2.3.2.2 Tariffs and Regulations

Within the Ukraine, tariffs for both heat and electricity obviously vary in accordance with many factors. Commercial tariffs for Kievenergo, the regional authority, are shown in *Table 15.*

Table 15. Kievenergo Commercial Tariffs

	1990	1991	1992	World Price
Thermal Heat (R/Gcal)	12.021 (0.114)*	15.518 (0.148)	907.57 (8.644)	3,125 (29.76)
Penalty for Condensate Not Returned (R/metric ton)	None	None	None	None
Electrical (kp/kWh)	2.309 (0.00022)	3.812 (0.000363)	131.42 (0.0125)	670.14 (0.064)

*Values in parenthesis are dollars per unit shown, based on a current exchange rate of 105 rubles per one U.S. dollar.

The recent increase in the tariffs has come as a severe shock to everyone, and many of the people are unable to pay the new rates. The government has issued several explanations to the public as to why the price increases have occurred, but this does not make it any easier to pay the new rates. The current rates are still far below world prices, and are expected to continue to rise to offset the increasing fuel prices.

2.3.2.3 Description of Systems

Thermal heat is used in commercial facilities for space heating and for heating domestic hot water. The piping arrangement is typical of the systems used throughout all of the facilities, with an inducing venturi to blend supply and return water. The mixed water is then delivered to the facility for space heating, with domestic water then being heated from the return water.

2.3.2.4 Energy Efficiency Measures Implemented

Basically there have not been any energy efficiency efforts in the past, since energy was heavily subsidized and the costs to the consumer were very low. Therefore there was no reason to conserve, or even to consider conserving. Economics now are forcing people to conserve, but any efforts towards conservation have been manual, such as turning off the heat.

2.3.2.5 Systems to be Audited

Several factors were considered in selecting facilities to audit. The primary consideration was the replicability to other facilities of any recommended energy conservation measures. The second was determining is the existing system was inefficient and could be improved. Some of the first considerations in selecting sites to audit was to determine that the facility to be audited was typical and that it uses too much energy. Since this is basically a demonstration type of program, another factor that was considered was to utilize a facility that would be instantly recognizable to a large number of people. Another consideration that was originally unexpected was that of security. Site selection for implementing equipment could easily be invalidated by having the installed equipment stolen, which apparently is a very large concern. Another very important consideration is the recommendation of the assisting agencies, since they are knowledgeable of the buildings, and can recommend good candidates.

Utilizing the above-mentioned criteria, three commercial facilities were selected to conduct site specific audits. These facilities are:

- The Kiev Opera and Ballet House;
- The Railway Administration Office Building; and
- The Sports Hall.

2.3.3 Residential

2.3.3.1 History

The Kiev Heat (or Thermal) Distribution System (HDS) (part of Kievenergo) provides and distributes thermal heat in its distribution system to the user's premises. In Kiev, there are two main groups of end-users for thermal heat. These groups are generally classified as housing users and all others. The housing users classification introduces another agency, in that housing is controlled and regulated by the Ministry of Housing.

The Kiev Housing Distribution HDS Energy office, with 3,500 employees, is responsible for providing and distributing thermal heat in housing facilities (approximately 6,000 buildings). Of this number, approximately 1,000 are buildings that are over nine stories in height. The others range in height up to eight stories. In Kiev, this agency has roughly 1,000 km of

piping to maintain, similar to that of Teploset. They have the same type of problems with corrosion, and spend the majority of the summer repairing/replacing damaged piping. Buildings over eight stories in height have booster pumps to circulate thermal water. The failure rates of the electric motors is high, causing additional maintenance time and effort to repair/replace.

In a centralized heat supply and distribution system, the integrity of the system becomes quite important. If any part of the supply or distribution network fails, many people are without heat. The high ground water table in the Kiev area is a constant challenge to maintain these systems, and to minimize any interruptions. The architectural trend in the former Soviet Union (and Kiev) has been to centralize housing, with apartment buildings becoming bigger and higher. This trend causes many people to be inconvenienced when interruptions do occur. The personnel at the Housing Energy Office actually prefer the older architecture in Kiev, where fewer people live in each building. Each interruption would therefore inconvenience fewer people, and result in fewer complaints.

2.3.3.2 Tariffs and Regulations

Prices have risen several times during the past year and a half. In the past the cost to the general public for heat in their individual apartments was considered symbolic (5 to 10 R/Gcal), and did not cover the entire cost of the heat. Ten R/Gcal is equivalent to $.024/MMBTU at 105 R/$. The average world price of natural gas is $2.50/MMBTU. This means residential energy prices will need to increase at least 100 times to be in line with average world prices. The City Council subsidized the cost of the heat, and the tenant did not realize the full cost of the heat. The tariff structure also has some unusual methods of subsidizing the cost of electricity. For instance, if the tenant has an electric oven, they pay half of the standard electrical rate. Apparently this was done because the previously subsidized cost of heat was so low that if the tenant had an electric oven, their electric consumption and therefore their electric bill would by comparison be very costly. So the government simply didn't charge for the electric consumption of the oven, and it was basically assumed to be one half of the total consumption of the apartment.

Table 16 gives an approximate indication of the recent prices and the trend to have the user assume the full cost of the power and heat.

Table 16. Kievenergo Residential Tariffs

	1990	1991	1992	World Price
Thermal Heat (R/Gcal)	7.122 (0.068)*	12.822 (0.122)	42 (0.4)	3,125 (29.76)
Penalty for Condensate Not Returned (R/metric ton)	0.33	1.16	N.A.	N.A.
Electrical (kp/kWh)	2.632 (0.00025)	2.828 (0.00027)	12.28 (0.0012)	670.14 (0.064)

*Values in parenthesis are dollars per unit shown, based on a current exchange rate of 105 rubles per one U.S. dollar.

As can be seen, the residential rates are far below world prices for both thermal heat and electricity. These rates are to be rising in the future, with electrical tariffs of 50 and 100 kp/kWh already known. However, the government is reluctant to implement these rates, due to the negative reaction to the current rates. Already the public has been complaining about the price increases for the residential sector. People have been inquiring about reducing their energy costs when they pay their monthly bills. Currently their only choice is to control their electricity by turning off lights and appliances. Since their heat consumption is not metered but calculated theoretically, conservation will not reduce their monthly bill.

2.3.3.3 Description of Systems

In addition to the distribution system within the Ministry of Housing areas, this agency also maintains and operates 113 natural gas fired peaking boilers. Approximately 100 of these boilers are sized between 0.5 and 2.5 Gcal/hr, with thirteen additional units around 8 to 10 Gcal/hr. These boilers provide additional heat for the housing facilities. According to the Chief Engineer of the Housing Energy Office, the average efficiency of these units is only in the 60% to 70% range. The boilers also require a considerable amount of servicing.

The following table is taken from a handbook published by the Housing office:

Table 17. Housing Thermal Energy Statistics

	1986	1987	1988	1989	1990
Profit (Thousand of Rubles)	3,350	3,400	4,146	4,354	4,442
Heating Load (Gcal/hr)	329.0	367.7	394.3	420.0	586.1
Heating Capacity (Gcal/hr)	581.7	644.6	688.1	766.7	754.0
Housing Space Heated (1,000 m^3)	17,694	18,522	19,196	19,800	20,931

The majority of the urban population live in high rise apartment buildings. These buildings typically are located in sub-divisions of the city, with many buildings in each area. The typical piping arrangement for the heating system once it enters the building is shown in *Figure 8*. This piping arrangement is dependent upon an inducing type venturi to mix return water with district heating water. This mixed water is then supplied to the facility for space heating. The venturi (commonly referred to as an elevator or injector here) is sized to take the 150 °C design district heating water and mix that with the 70 °C design return water temperature to provide 95 °C water to the building during the coldest weather. Since the venturi is a fixed device, it cannot adjust the water flow rate or mix return water with supply water to deliver variable temperature water to match the buildings' instantaneous load. Temperature control within the building is dependent on the supply water temperature from the district heating system. The supply water varies in temperature according to the outside temperature, so as the weather moderates, the supply water is heated to a lower temperature than 150 °C. In theory this should provide proper control to each building, but in reality most buildings are overheated in mild weather.

Domestic water is typically heated by taking the return water from the space heating system and then running it through two heat exchangers. This provides the required heat for the domestic water of the building, but also reduces the water temperature returning to the power plant. In theory, it is important to have a low return water temperature to the plant, since this improves the efficiency of the power plant.

Figure 8. Typical Piping Arrangement

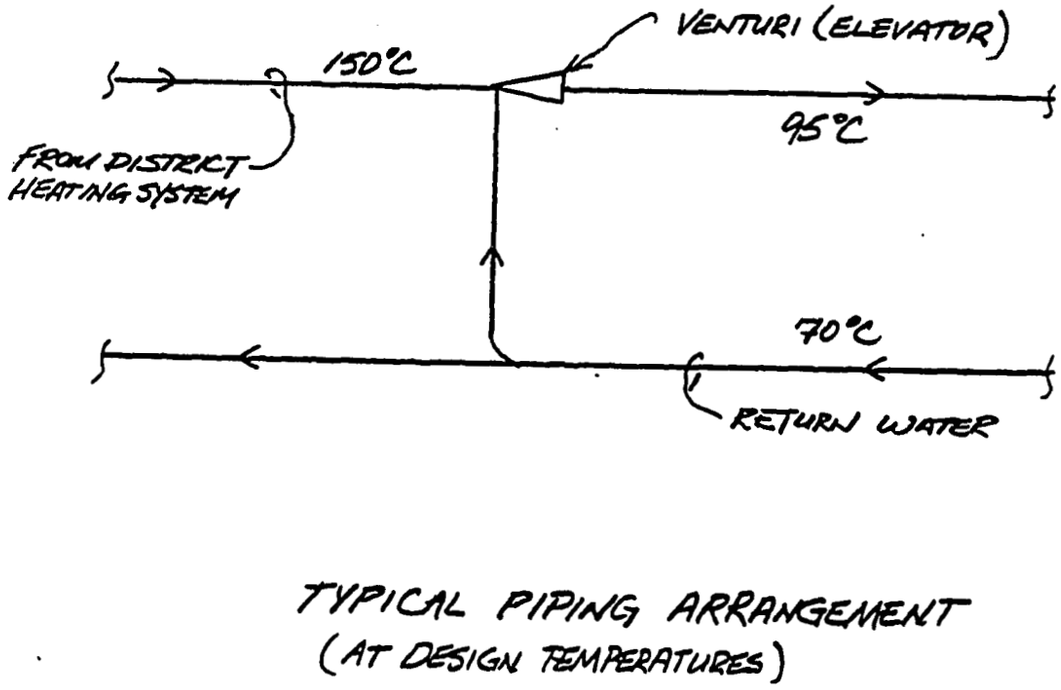

2.3.3.4 Energy Efficiency Measures Implemented

Although a few efforts were made in the past to control the water temperature serving the housing buildings, the valves that were used were not very high quality, and didn't last or work properly. Since the amount of heat to individual tenants is not measured, the tenants themselves have little interest in conserving energy.

2.3.3.5 Systems to be Audited

Housing buildings that are eight stories or less are of special interest, since the district heating water serving them typically is not adjusted at the housing distribution centers. Therefore, the water temperature serving these facilities remains high, and the potential for overheating is great.

3.0 Description of Audit

3.1 System Specific Audit

3.1.1 Scope and Methodology

Individual systems and/or components were identified for data collection and analysis. These systems were selected based on several criteria, including:

1. Quantity of energy used within the district heating system.
2. Potential for energy efficiency improvements.
3. Significance of system/component to the district heating system.
4. Potential for replication.

The selection of equipment and systems to audit was made after many discussions of the overall district heating system with individuals from all segments of the system. In addition, brief walk-through visits of many facilities were made to observe first hand the equipment and components that make-up the district heating system. Based on the observations and the discussions held, several areas were selected in which to concentrate. However, this was an on-going process, and as information and data was collected, audit targets were added or changed as appropriate.

Energy data was collected using a variety of equipment that was taken to the Ukraine by the auditors. The major pieces of equipment include:

- 1 combustion analyzer;
- 1 infrared high temperature thermometer;
- 1 pyrometer;
- 1 power analyzer;
- 1 air velocity, temperature meter;
- 1 multimeter; and
- 1 computer and printer.

Of this equipment, the most useful pieces were the combustion analyzer, the thermometers and the computer. The large scale of the systems and equipment audited, in addition to the focus on district heating, made some of the other equipment less useful. However, the majority of the equipment was used extensively by the United States personnel and as a training tool for the Ukrainians. Typically the audit team would separate during the day, with each member responsible for data collection, etc. Each member would usually be accompanied by three to six Ukrainians, for the purpose of observing and answering questions, etc.

3.1.2 Production and Peaking Plants

3.1.2.1 General

Thermal Power Station #5 (TPS-5) was selected as the audit facility. TPS-5 was identified by the Ministry as a station representative of the Heating System Plants in the Ukraine. The Ministry also identified the management of the facility as receptive to this type of program and felt that the maximum benefit could be gained by working at TPS-5

3.1.2.2 Combustion Efficiency

Boiler combustion efficiency tests were performed on three of the four TPS-5 main boilers. Unit I was down for scheduled maintenance during the audit and therefore could not be tested.

The results of the boiler efficiency tests are shown in *Table 18.*

Table 18. Boiler Efficiency Test Results

Boiler 2	
Percent Oxygen	2.9%
Percent Carbon Monoxide	<0.01%
Excess Air	15.5%
Boiler Efficiency	89.1%
Boiler 3	
Percent Oxygen	1.4%
Percent Carbon Monoxide	<0.01%
Excess Air	6.5%
Boiler Efficiency	87.3%
Boiler 4	
Percent Oxygen	1.6%
Percent Carbon Monoxide	<0.01%
Excess Air	7.3%
Boiler Efficiency	87.0%

A portable combustion efficiency monitor was used. The combustion analyzer is a portable instrument which has electrochemical cells to monitor oxygen, carbon monoxide, sulfur dioxide and oxides of nitrogen content. The unit also has a thermocouple incorporated in the probe to measure the temperature of the gas at the extraction point. The fuel analysis of various typical fuels are contained in the memory of the portable analyzer. Based on these fuel analyses, combustion efficiency is calculated and displayed. For the purpose of this audit, independent calculations were made based on the O_2 and CO content, rather than the calculated efficiencies of the analyzer. There were two reasons for this: 1) the preprogrammed fuels were not thought to be representative of those burned at the plant; and 2) the calculations needed to be based on a temperature different from that at the gas sampling point.

A gas sample was fed from the exhaust gas of each unit into the combustion analyzer. The probe of this type of instrument is intended to be inserted directly into a duct. This was not possible on the TPS-5 units. Rather, a sample was extracted from the apparatus feeding the stations' existing oxygen monitoring equipment. Because the calculations were based on a different measurement point, an extractive sampling method was acceptable. The location of this sample was from the back gas pass between the superheater and economizer on unit II and between the reheater and economizer on units III and IV. This was the best available sample point as it is close to the boiler gas exit point and therefore not affected by infiltration of air due to duct leakage. Also, this point is virtually the same as the point at which the station's oxygen equipment is drawing its sample. The readings of the combustion analyzer could be compared to the station instrumentation. Readings were taken at two points on the boiler duct work representing the left and right sides of the gas backpass.

Because the point of gas sampling was before the regenerative air heater, the temperature used for the calculations was based on the temperature at the outlet of the fans exhausting the boiler. This temperature was measured by station instrumentation.

For each unit readings were taken at one minute intervals for five minutes at each of the sampling points. The instrument was then moved to the other point and the process repeated. The instrument was then moved to each of the two points once more for an additional set of readings for a total of twenty sets of data.

Boiler efficiency was calculated using the heat loss method based on this data and representative fuel analyses. Fuel information available included the heating value and sulfur content of the heavy fuel oil and the heating value and density of the natural gas. The station did not have available complete ultimate analysis of the exact fuels burned at the time of the test. Parameters used were based on the typical analyses provided by the plant. The fuel analyses used for the calculations are listed in *Table 19*.

Table 19. Fuel Analysis

Heavy Fuel Oil		Natural Gas	
Heating Value	9,216 kcal/kg	Heating Value	8,115.5 kcal/kg
Carbon (Percentage)	85.7%	CH_4	95%
Sulfur (Percentage)	2.3%	C_2H_6	0.5%
Oxygen (Percentage)	0.8%	C_3H_8 (Percentage)	0.5%
Nitrogen (Percentage)	0.1%	N_2 (Percentage)	1.5%
Hydrogen (Percentage)	10.1%	CO_2 (Percentage)	1.1%
		O_2 (Percentage)	1.5%

Units III and IV were burning a combination of natural gas and heavy fuel oil during the data collection. For the analysis a composite fuel composition was calculated based on the firing percentages for each fuel. A break down of the fuels being burned at the time of the tests is given in *Table 20.*

Table 20. Fuels Burned, By Percent

Boilers	Heavy Fuel Oil		Natural Gas	
	No. of Burners	Percentage	No. of Burners	Percentage
Boiler #2	18	100%		
Boiler #3	3	19%	13	81%
Boiler #4	2	12.5%	14	87.5%

Boiler combustion efficiency tests were also performed on TPS-5 peaking plant number two. Although none of the peaking plants were in service due to system requirements at the time of the audit, the plant staff started up this unit so a test could be run.

Tests were run at two loads. One of about 60 Gcal/hr with six burners in operation and one at about 100 Gcal/hr with ten burners in operation. The units were fired on 100% natural gas during our test. The results of the tests are shown in *Table 21.*

The only available insertion point for these tests was from the center of three flues feeding the stack. The probe of the combustion analyzer was inserted into the flue. It is desirable in such a test to take readings at several places in the flue gas pass. This was not possible

in this circumstance. Boiler efficiency was again calculated by the heat loss method. Calculations were based on the temperature as measured by the portable combustion analyzer. The same natural gas analysis as used for the main units was assumed.

Table 21. Peaker Boiler Efficiency TPS-5

Peaker No. 2 (Test 1)	
Percent Oxygen	7.3%
Percent Carbon Monoxide	<0.01%
Excess Air	48.4%
Boiler Efficiency	86.2%
Peaker No. 2 (Test 2)	
Percent Oxygen	4.1%
Percent Carbon Monoxide	<0.01%
Excess Air	21.6%
Boiler Efficiency	89.1%

3.1.2.3 Steam Boiler Area

The boilers were audited with the aid of the head of the Boiler and Turbine Department. Because unit number one was down for maintenance, an inspection of the unit's burners to evaluate burner maintenance with respect to combustion efficiency was possible. The burners of these units are of a simple design with a simple mesh type diffuser for air distribution. The burners appeared to be in good shape; none of the components appeared to be burned or warped. The air and oil/gas controls at the burner were by outward appearances clean and in good working order.

An inspection of the fuel flow instrumentation scheme was made at the station personnel's request. Both systems utilize simple differential pressure orifices and transmitters with no corrections made for changes in supply pressure or temperature. The gas orifices are installed in very large (500 mm) horizontal pipe and appear to have been installed with an adequate number of upstream and downstream diameters. Comments regarding the lack of confidence in these instruments were made by the head of the Station Director, Chief Engineer, Head of Boiler and Turbine department, and by a representative of the Adjustment Department.

3.1.2.4 Boiler Control Rooms

While the scope of this audit allowed no time for a detailed evaluation of Thermal Power Plant #5's control systems, during the course of the information gathering phase of the audit numerous visits were made to the control room to gather data or information from the station personnel. For the parameters inquired about, the instruments were always available and functioning.

3.1.2.5 Boiler Stack Area

The audit team learned through interviews with station personnel that the induced draft fans are a two speed rather than true variable speed design and that air flow control is through adjustment of the fan inlet vanes. The evaluation of retrofitting to variable speed drive technology was considered. The motors are 1,700 kW with a supply voltage of 6 kV.

3.1.2.6 Hot Water Heating System

The hot water system heat exchangers and make-up system were audited with the aid of Dr. Ishai Oliker, a recognized expert on district heating systems. Operations personnel were interviewed with respect to the operation of the heat exchangers and make-up water system. The heat exchangers on Unit I were open allowing a brief visual examination. Station personnel stated they did not feel fouling of these heat exchangers is a problem. The heating surfaces appeared clean an free of any obvious deposits. A report of Dr. Olikers findings is found in Appendix C.

The evaluation of retrofitting the first and second stage heating system supply pumps with variable speed drive technology was also considered. The motors are 1,600 and 2,500 kW respectively and have a supply voltage of 6 kV.

Personnel were also questioned about the operation of the make-up water system treatment and deaeration. The equipment was inspected and found to be in good operating condition by Dr. Oliker.

3.1.3 Thermal Distribution System

3.1.3.1 General

Thermal energy or heat is supplied by Kievenergo underground throughout Kiev by means of a piping network. The system is fed by three thermal power plants (plants that produce both thermal energy and electricity) and nine boiler plants. Currently the distribution system is not totally interconnected, and seven of the nine boiler plants serve a localized distribution network. The remaining two boiler plants feed into the main distribution network as do the three power plants. As of 1989, the distribution network consisted of piping from 50 mm (2 inches) to 1200 mm (3.9 feet) in diameter. The length of the network main piping is 795 km (494 miles).

3.1.3.2 Pipe Insulation

The distribution piping is insulated when it is put into operation. However, as mentioned previously, due to high levels and moisture in the pipe tunnels, the insulation only has a life expectancy of around seven years. The majority of the insulation is mineral wool. The insulation thickness is based on the following table:

Table 22. Distribution Piping Insulation Thickness

Pipe Diameter	Insulation Thickness	
(mm)	Supply Pipe (mm)	Return Pipe (mm)
100	30	30
150	40	30
200	40	30
250	40	30
300	40	30
350	40	30
400	40	30
450	40	30
500	60	30
600	60	30
700	80	40
800	80	40
900	80	40
1,000	80	40
1,200	80	40
1,400 (proposed)	80	40

The largest problem regarding insulation of the distribution system is not the adequacy of the insulation or the thickness, but the life expectancy. Since the insulation often is wet, it loses its insulating properties and deteriorates. This affects the energy consumption, or energy loss, more than any other aspect of the piping insulation. The solution is obvious, but not easy to achieve. Keeping the insulation dry is of primary importance.

3.1.3.3 Leakage

During the summer months, the distribution piping is tested, and the leaks are repaired or piping sections replaced. It is typical to have between 400 and 500 leaks repaired each summer (in 1991 there were 510 leaks). May to October is spent locating and repairing these leaks. This is a very labor intensive process, and maintenance costs are high. The typical water flow rate during the winter is between 90,000 and 95,000 m^3/hr (395,800 to 417,800 gpm). In addition to the maintenance aspect, many areas of the city are without hot domestic water during all or parts of the summer, causing at the minimum a major discomfort. Information received indicates that leakage accounts for approximately 1,200 to 1,500 m^3/hr (5,300 to 6,600 gpm) or about 1.6%.

Teploset spends approximately 50 million rubles ($476,000) per year in Kiev repairing piping leaks. Of this amount, approximately 40% is spent on emergency repair of leaks, while the remaining amount is spent during the summer on regular replacement of piping sections.

3.1.4 End-User

As mentioned earlier, almost all facilities within Kiev are heated from the district heating system. This includes industrial, commercial and residential facilities. Several buildings were audited to determine the potential for temperature control. These facilities include the Kiev Book Factory, the Kiev Opera & Ballet House, the Railway Administration Office Building, the Sports Hall, and several apartment buildings. These facilities are described in detail below.

3.1.4.1 Industrial

3.1.4.1.1 Facility Selected for Audit

The Kiev Book Store was selected for our visit by individuals within the Ministries. Getting into an industrial facility is very difficult, undoubtedly due to former policy and procedures. Although permission was finally given, the choice of facility was apparently carefully considered before selecting a book printing and binding facility. Regardless, the choice was a good one, since this appeared to be a typical industrial facility, somewhat old, with what appeared to be typical heating energy using systems (space heating as well as ventilation).

3.1.4.1.2 Insulation

Piping insulation in the factories is typically old and deteriorating, or probably non-existent. In the Kiev Book Factory, there was insulation on some of the supply piping in the mechanical room, although in places it had been removed or was badly deteriorated. The return piping typically did not have insulation. The insulation was rope type, and there were areas where the insulation did not cover the piping adequately. In general, piping insulation is badly needed throughout the entire end-user network.

3.1.4.1.3 Leakage

Leakage from the district heating system was not observed, and did not seem to be a problem. If and when leaks do occur, they are apparently promptly fixed, typically by one of the agencies in which the Ministry is involved.

3.1.4.1.4 Controls

Space temperature within the facilities is controlled by two inter-related systems. The district heating supply water temperature is varied depending upon the outside temperature. This is done through the central dispatch center at Teploset. In addition, the inducing venturi at each facility is designed to mix supply water with return water to provide adequate heating for the coldest day of the year. However, these two systems cannot provide the correct temperature for each building under all weather conditions, and the result is that many facilities are overheated during periods of mild weather. This condition exists in virtually every facility heated by the district heating system.

3.1.4.1.5 Domestic Hot Water

Domestic water is typically heated from a pipe within a pipe heat exchanger, using the district heating water as the source. The supply pipe comes off of the district water piping once it enters the building, and ahead of the inducing venturi used for space heating. Temperature control is a function solely of the incoming district water temperature.

3.1.4.1.6 Ventilation

This facility has a built-up air handling unit used to make up air from the many exhaust fans within the building. The system at one time had minimal controls, but these have failed or been discarded for one reason or another. Therefore, the make-up air unit and the exhaust fans are all operated manually. The facility operates two eight hour shifts per day, five days a week.

The air handling unit is 100% outside air, with two louvers (61 cm x 101.5 cm) in the outside wall. There are two dampers and a damper operator, but these are in very poor condition (and the operator does not function). Outside air is essentially not controlled, and since the system functions manually, there are many times when the system is not shut off but operates continually. In addition, the filters have not been changed in years, and some are missing. Those that are present are so dirty that it is doubtful that any air could pass though them. This means that the coil is very dirty, resulting in poor heat transfer to the air.

3.1.4.2 Commercial

3.1.4.2.1 Facilities Selected for Audit

The Kiev Opera and Ballet House is a very famous and well known structure in Kiev. It dates from around the turn of the century, and is considered a historical building. This building was selected as an audit site due to its significance within Kiev, and the fact that is it is extremely well known and would likely generate a lot of interest for the demonstration project.

A building known as the Railway Administration Office Building was also visited. This facility is an office facility that is occupied on a standard Monday to Friday schedule. It would be more typical of commercial buildings than would the Opera House.

The Sports Hall was also selected as an audit target, since it is a well known facility that serves large numbers of people during various sporting and entertainment events.

3.1.4.2.2 Insulation

Similar to the industrial facility, the district heating piping was insulated at the building entrances. However, the piping within the buildings was not insulated. Most of the piping ranged from 50 to 150 mm in diameter.

3.1.4.2.3 Leakage

Leaks were not observed in these facilities. When leaks do occur, they are apparently quickly repaired.

3.1.4.2.4 Controls

Space heating in the Opera House is very critical, since it has performances every day, with rehearsals and practice sessions most days. The piping arrangement is typical, with the inducing venturi used for space heating. Temperature control is a problem, especially in mild weather. Since the Opera House is open every day, it has little to no need for control strategies such as night setback. *Figure 9* indicates the heat consumption and the cost per month for the Opera House in 1990.

The piping in the Railway Office Building is again typical of the piping arrangement found in other buildings. This building is overheated in mild weather, with no temperature control within the building. Therefore, temperature control based on outdoor temperature, night setback, and optimal start would be good control strategies to implement.

The Sports Hall is unlike the majority of the facilities within Kiev, in that it is not typically overheated. This facility was originally designed for indoor skating events, and the heating

Figure 9. Kiev Opera & Ballet House 1990 Heat Energy

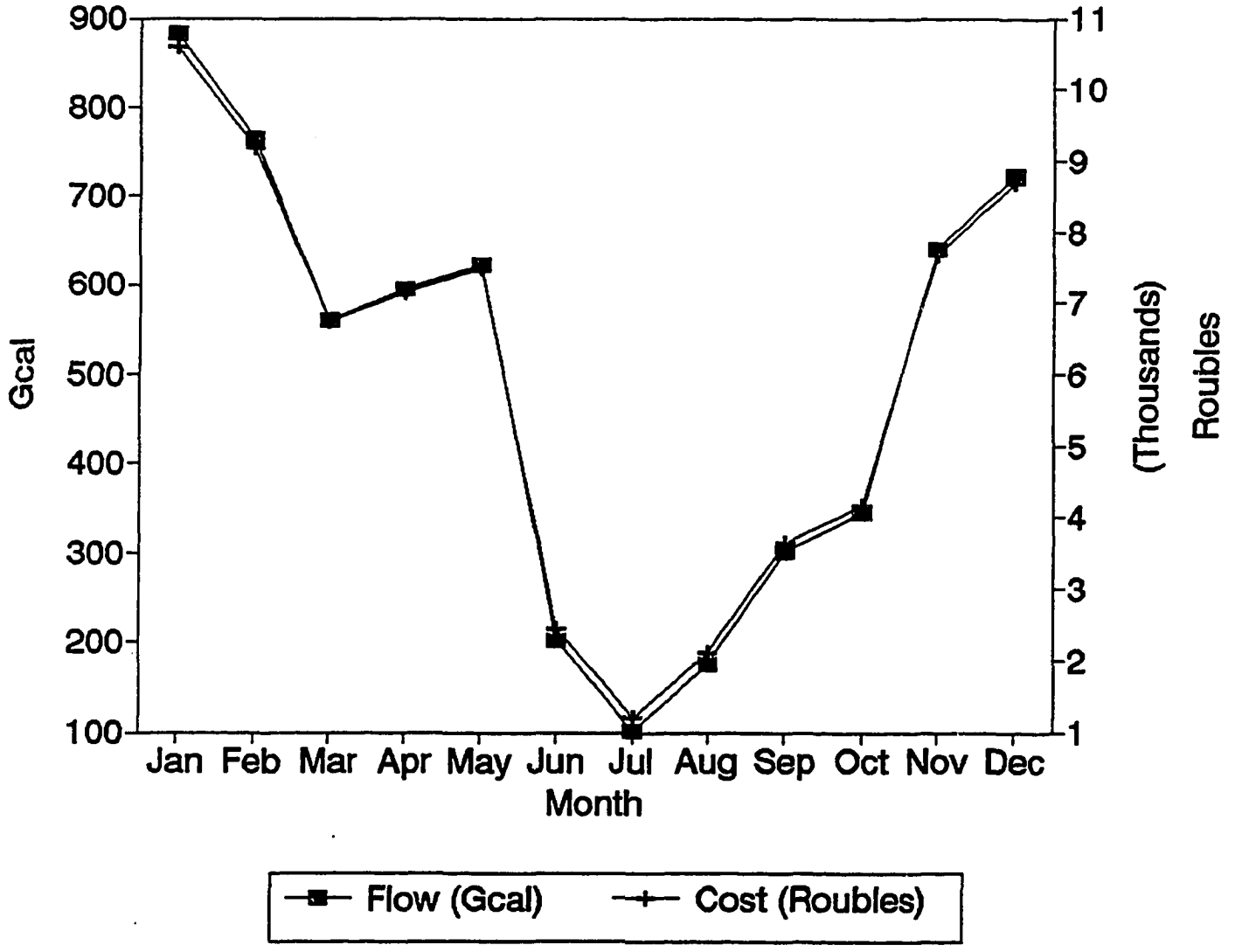

system that was installed has minimal capacity. The facility is now used for more functions than it was originally designed, with the result that there is inadequate heat in the building.

3.1.4.2.5 Domestic Hot Water

Domestic water is heated in exactly the same manner in the commercial buildings as it is in the book factory. Temperature control for domestic water was not identified by the users as a problem, such as being too hot, but there are essentially no controls on the water temperature.

3.1.4.3 Residential

3.1.4.3.1 Facility Selected for Audit

Since housing facilities that are less than nine stories tend to be overheated more than the taller buildings, these facilities are the primary residential targets for auditing. All of the facilities are basically identical, with the same heating design and equipment.

3.1.4.3.2 Insulation

Piping insulation within the housing facilities is virtually non-existent. The district heating piping entering the housing buildings is typically insulated, but the distribution piping is not.

3.1.4.3.3 Leakage

As with other buildings, leaks were not noticed in the heating system. When leaks do occur, they are apparently quickly repaired by agencies within the various Ministries.

3.1.4.3.4 Controls

Temperature control in the housing buildings tends to be inadequate during the change in seasons, when the weather is somewhat mild. This is especially true in buildings less than nine stories in height, due to the particular piping arrangement used (see *Figure 10*). Buildings nine stories and taller have the supply water temperature reset at the housing distribution building. Although these buildings also overheat, they do not do so to the extent that buildings less than nine stories do.

The supply pipe from the distribution system for most of these buildings averages between 50 and 150 mm in diameter. Although the temperature of the hot water is supposed to be reduced in these mild periods, the buildings still are overheated. Within the buildings themselves there is no temperature controlling device. Consequently, during mild weather the apartments are overheated and the residents open their windows to reduce the room temperature.

Figure 10. Housing Piping Schematic

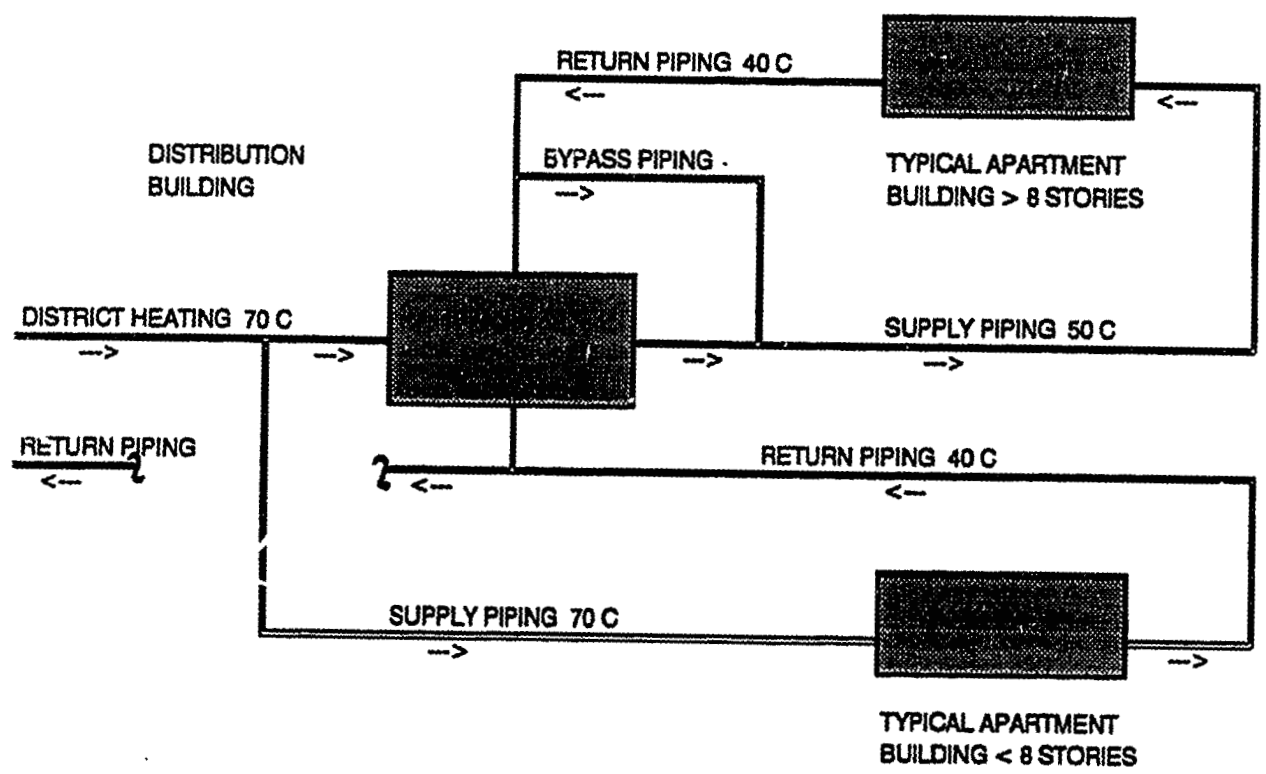

The use of temperature control valves with outdoor sensors would allow the heat to the buildings to be reduced during mild weather, eliminating the overheating that currently exists. The elimination of the overheating would result in energy savings, since less heat is being transferred from the system, less heat would have to be provided. Energy savings calculations are based on a typical eight story building, with 20 apartments on each floor, for a total of 160 apartments. Based on a typical area of 50 m^2 per apartment, the total floor area is approximately 8,000 m^2 (86,111 ft^2), neglecting entrances, etc.

3.2 General Audit

3.2.1 Scope & Methodology

General audit activities included discussions of the entire district heating system within Kiev. Individuals responsible for various portions of the system were interviewed to learn details of the system, how energy is consumed, controlled, etc. Detailed measurements were not taken for this activity, but observations of the various systems and the knowledge obtained in discussions with the operating personnel were used to formulate impressions of the overall systems.

3.2.2 Production Facilities

The audit activities associated with the total system consisted primarily of a review of the various available publications and brochures produced by the various agencies and by the Ministry of Power and Electrification. Much information and insight was also gained through the interviews related to the system specific audits at all levels. Many of the personnel employed in the production of heating system energy have had experience in areas of the system other than the one in which they currently work, and this was useful as background material.

3.2.3 Distribution Systems

Due to the general inaccessibility of the distribution piping, it was not possible to audit the underground piping. However, many discussions were held regarding the status of the piping, and the problems relating to corrosion. New piping sections were observed while being installed, and this was used to corroborate information received regarding the type and design of the piping installation.

3.2.4 End-User

End-user consumption of heat from the district heating system varied only slightly from building to building. In general, all buildings are basically the same, in that they have an inducing venturi to mix supply water with return water to meet the building's heating needs. This is a fixed device, and it cannot respond to different conditions between buildings, or weather, etc.

One difference in end-users is that industrial facilities may utilize ventilation, and therefore require heat energy to warm the air before distributing it throughout the building. In the industrial facility visited, the piping system serving the ventilation system branched off of the main building piping ahead of the inducing venturi. Therefore it was receiving water directly from the district heating system, not blended water. This would tend to overheat the ventilation air during mild weather periods.

One of the most significant facts regarding the end-users is that only a few of the industrial customers are metered for heat energy consumption. This was estimated at less than 5% of the total use of thermal heat within Kiev. Also, the metering that is available is read by the operators of the individual facilities, and the data is then recorded on a form and sent to Teploset at the end of each month. The metering typically consists of a flow meter on the space heating system, and supply and return water temperatures. Data is recorded once a day, based on an instantaneous reading. The data is used by Teploset to calculate the instantaneous consumption. They can then approximate the entire day's consumption by knowing the hourly outdoor temperature. This system is not very accurate, since many factors are estimated to determine the monthly consumption.

In the case of commercial and residential customers, they are billed strictly on a theoretical basis. An hourly energy loss is calculated based on a design temperature, and then using this value, the monthly consumption is estimated using the hourly outdoor temperature. Again, this system is very inaccurate, since many factors are assumed in estimating the monthly energy consumption. However, the most important factor here is that without actual metering of the thermal energy consumption, there is no incentive to conserve energy, or to improve the efficiency for the existing systems. Since the monthly bill is not a function of the actual consumption, saving energy will not reduce the customer's bill. This is a major point that needs to be addressed by the district heat authorities since the system users should be responsible only for their actual energy conservation. Also, by metering the actual consumption, an incentive system is established, so that the customer can be "rewarded" for their conservation efforts.

4.0 Findings and Recommendations

4.1 Specific System Audits

4.1.1 Heat Production

4.1.1.1 Short-Term Opportunities

Thermal Power Station #5 is a complex facility, although basically sound and well run. While only a few members of the plant staff were interviewed, their technical and plant knowledge was found to be very good. The technology employed to convert energy is similar to that used in the United States. However, boiler units III and IV are of a super critical design, which is considered to be the most efficient available conventional boiler design.

Portable Power Analyzer

One of the few areas of improvement that could be made is in the addition of modern instrumentation. The plant utilizes automatic combustion controls to trim the air flow in response to the oxygen content in the flue gas but through discussions with plant personnel it was found that generally the instrumentation is considered slow to respond and difficult to keep in accurate calibration. During the combustion efficiency tests generally good correlation was found between the portable combustion efficiency analyzer and the station instrumentation. However, it appears that the process is more variable than indicated by the plant instruments. While the plant is equipped with carbon monoxide instruments during the tests small levels of more than one-tenth of a percent were indicated by the portable analyzer which did not show up on the extractive in place station instruments. Station personnel said usually the indication from the oxygen metering instruments are fairly constant while the portable instrument readings were somewhat more variable.

During one of the tests, the variability of the in place oxygen instrument was somewhat erratic. The engineer working with us arranged for maintenance of the instrument. Several different personnel expressed a lack of confidence in the accuracy of this device.

This problem can be most easily and inexpensively addressed by providing portable equipment such as the combustion efficiency analyzer used during this audit. Having such a device as a tool for the plant to use in the tuning and calibration of the combustion instrumentation and combustion systems would be very valuable to the station in its efforts to improve combustion efficiency. The information gained with the analyzer would also be used to develop appropriate operating guidelines in view of the performance of the existing instruments. Because of the large amount of fuel consumed by the unit and the relatively low cost of such an instrument, allowing for only a very modest improvement in efficiency (0.5%), the payback for such an instrument would be less than twenty days.

The availability of this equipment to the plant has the added benefit of providing a means of monitoring environmental emissions from the plant. The analyzer used in conjunction

with this audit has the capability to monitor sulfur dioxide and nitrous oxide levels in addition to combustion related parameters. Currently the station has no available means of doing this. During our use and demonstration of the instrument, the personnel were as interested in these features as in the combustion monitoring capabilities. While such a device is by no means a replacement for continuous emissions monitoring equipment, it would provide the first step in the plants efforts to monitor environmental emissions directly.

In Situ O_2 Sensors

The combustion efficiency problem could also be addressed by replacing the existing extractive oxygen analyzers with in-place zirconium oxide sensor analyzers of the type used in the United States. One problem with the existing system installed at the plant is that it is extractive rather than in-place. The danger with using extractive gas sampling devices is that it is difficult to obtain a representative sample by such means. United States practice typically places a oxygen sensing probe into the duct rather than extracting a sample to it. This technology could be applied to the TPS-5 Units. Two probes would be required on Units I and II while three likely would be required on III and IV.

Assuming the same modest gain available as was with the portable instruments the payback of installing in-place oxygen instrumentation is less than three months. Because multiple installations would be required in this approach it requires higher capital costs ($46,000).

Fuel and Gas Meters

The audit team learned through interviews with station personnel that one area which has hampered the stations progress in energy improvements is the inability to accurately measure the decrease in fuel consumption due to any changes in operation or equipment motivated by efficiency improvement. This is because the station has no confidence in the existing fuel flow instruments in place at the station. If only modest gains in efficiency (0.5%) could be realized due to the incentive provided by the ability to more accurately evaluate such improvements, such flow monitoring equipment could pay for itself in a period of less than two months.

Energy Analysis

Currently the performance calculations done routinely at TPS-5 are based on algorithms developed by the plant designers. More sophisticated calculations such as boiler efficiency by the heat loss method or turbine cycle efficiency need to be carried out entirely by means of manual calculations which is a time consuming task, and they are therefore not done. A personal computer would make frequent performance calculations more practical and give the staff a tool to analyze the systems on a more frequent basis. It would also allow them to more conveniently monitor and track the level of performance and identify degradation or improvement. Currently the personnel at TPS-5 are struggling to incorporate newer technologies into their systems. Computer technology is not common and as such many of the technical staff have no opportunity to become exposed to it. A computer dedicated for use by the performance staff could serve as an introduction to computer technology for them

and as such become a starting point for them to incorporate more sophisticated control and monitoring technology into their systems.

While it is difficult to quantify the economic paybacks of a computer that will be used for so many tasks, it is likely that the first use for this computer will be to analyze the data produced by the combustion analyzers being supplied. The computer can be used by the staff to track boiler efficiency over a period of time and can otherwise enhance the usefulness of the combustion analyzers. Incorporating the cost of the computer into the energy conservation measure of purchasing combustion analyzers would raise the payback of that measure from 16 to 21 days.

4.1.1.2 Medium and Long-Term Opportunities

Variable Speed Motors

The station uses very little in the way of variable speed drives and motors. Control of the large fans is generally by use of the inlet vanes, except for the induced draft fans which have only a two speed control. Both the first and second stage heating supply pumps are also single speed electric motors. The common engineering practice in the United States is to use variable speed technology on at least some of these applications. The standard supply voltage used for these pumps is 6 kV. The motor sizes involved are in the range of 2 - 4 thousand horse power. Any application of variable speed technology would require around $250,000 to $500,000 per motor because of the size of the equipment.

Boiler Insulation

While most of pipes, ducts and fans are reasonably well insulated with either mineral wool or calcium silicate insulation, large parts of the boiler casing are not. The general practice in the United States is to insulate such surfaces. The most notable uninsulated section of the plant is the upper section of the super critical boilers. Insulating this area would be a substantial project. The estimated cost is $250,000.

Control Technology

It is the opinion of the auditors that the level of control technology is less than that in United States' plants of similar age, and certainly less than that available today. While the installed systems work well, it is possible that some improvements could be realized in combustion control and monitoring and in burner management system improvements. Such evaluations would need to be made on a case by case basis and are beyond the scope of our audit.

4.1.2 Thermal Distribution System

4.1.2.1 Short-Term Opportunities

Within the actual distribution system itself, there are no short-term improvements that could be made of a practical nature. Although a new piping design should be implemented, this does not have a short payback period. When a new design is implemented, this will correct the degradation of the piping insulation.

Portable Combustion Analyzer

The only short-term payback would be for the distribution system peaking boilers. Better combustion efficiency could be obtained with the use of a portable combustion analyzer. This device would allow the operators to make the necessary air and fuel adjustments in order to optimize the combustion efficiency. The payback period for this instrument is approximately six and a half months.

4.1.2.2 Medium and Long-Term Opportunities

Pipe Corrosion/Insulation Integrity

The distribution system has one very significant problem, and that is the high degree of corrosion that attacks the piping. This corrosion requires a very significant amount of labor to locate and correct. In addition, since the life expectancy of the piping insulation and the piping is shortened due to the corrosion, there is both a significant energy loss (due to heat transfer through the piping and heat loss due to water loss) and a very significant repair cost.

There are several possible solutions or corrections to improve the existing system. Many of these solutions are currently being explored by the various agencies within Kievenergo to try to find a design that will significantly increase the life expectancy of the piping network. One solution would be to utilize a pipe-within-a-pipe design, with the outer pipe sealed air tight so that the moisture laden environment will not be able to attack the inside pipe. A typical sketch of this concept is shown in *Figure 11*.

The space between the two pipes should be insulated to reduce the temperature loss. The outer pipe should be of a non-metallic substance, so that it will not corrode. Since it will not be subjected to the high temperatures and pressures that the water carrying pipe will, it should be possible to design such a system. One of the Research Institutes for Kievenergo has been working on a design of this type, and plan on implementing about seventy meters of the design this summer.

Another possibility would be to do periodic robotic inspection from the inside of the piping. This concept involves placing a robot inside the pipe, which then traverses the piping. The robot tests for pipe thickness, which identifies corroded areas from their thinner wall section.

Figure 11. Pipe-Within-A-Pipe

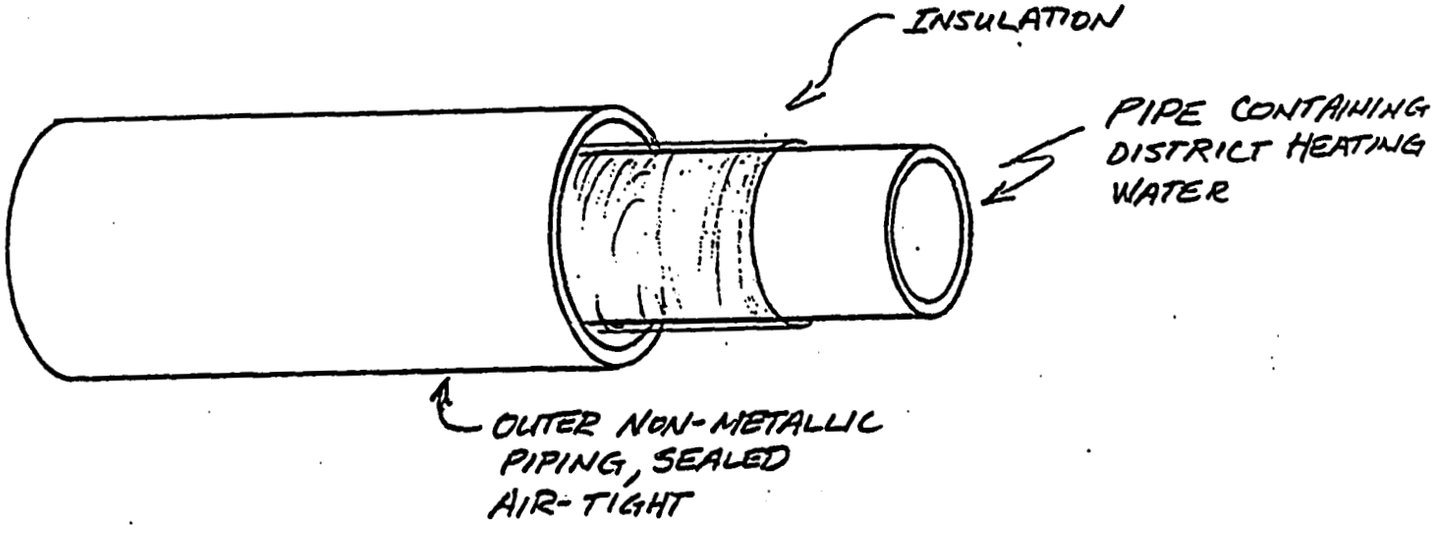

Once areas of thin wall section are identified, they are marked for replacement so that a leak does not occur. This will assist in improving maintenance and reducing leaks, but does not eliminate the original problem of high corrosion rates. This type of identification would cost a minimum of $25,000 to $50,000, which might only justify this work in the large piping sections. Since this type of effort is time consuming, this cost estimate may even be higher to survey the main piping sections.

Variable Speed Pumps

Another potential target for energy improvements would be to provide variable speed pumping for the distribution system. However, the cost of this equipment would be a minimum of US$ 500,000, well beyond the scope of this project.

4.1.3 End-User

4.1.3.1 Short-Term Opportunities

Portable Combustion Analyzer

As mentioned earlier in the report, housing facilities constitute a main end-user for the district heating system. The housing facilities also have peaking hot water boilers to boost the district heating water temperature when needed. (Not all of the housing facilities are connected to the central distribution system, since they serve newer residential areas at the edge of the city. These are to be interconnected in the future to the central system.) One area where improvements could be made is in the combustion efficiency of the housing authority's peaking plants. The housing department operates 113 peaking boilers, with a typical size of 0.48 to 8.0 Gcal/hr. Two of the housing facility's peaking plants were visited. The general condition of the plants was good, although they were old (about 30 years) and lacked instrumentation.

Combustion efficiency tests done on representative units showed operating levels of excess air at 57% and 107%. On one unit carbon monoxide levels of 0.1 % were recorded. Low efficiencies were noted by our tests and by the records kept by station personnel.

The department has an adjustment group which is responsible for the controls and operating parameters of the boilers. This group develops operating profiles by taking measurements at the stations roughly every six months. The number of stations and difficulty of the tests with existing methods makes more frequent adjustment unpractical.

Because of the large number of boilers involved, a combustion efficiency analyzer would be a valuable tool for improving the efficiency of the units. If the utilization of such a tool would result in the elimination of the level of carbon monoxide seen during our test, it would pay for itself in approximately thirteen months. This payback is in the reduction of carbon monoxide only. It is likely that substantial gains also could be made in regards to reduction of excess air. If so, even more savings could be realized.

4.1.3.2 Medium and Long-Term Opportunities

Control Systems

The main problem within the end-users themselves is the lack of temperature control. Few buildings have any control device, and most are overheated for a significant portion of each year. The piping design used in each building is standard, with the venturi device blending water to provide a reduced water temperature to the building. Since this device is incapable of changing with the season or outdoor temperature, it is dependent on the entering supply temperature to provide the correct amount of heat. In theory when water is blended or mixed, the heat to the building will be adequate but not excessive. But this system is not very effective, and many buildings can be observed with their windows open, while the heating system operating. Opening windows serves as a control device, but obviously is not very effective, and causes additional heat to be expended.

Several control techniques can be used to improve or replace this system and provide proper control to the building. The best method involves adding temperature control to each terminal heating device or to each heated room. This provides good control, and allows each room to be controlled to a specific setpoint. As the outdoor temperature changes or the effects of the sun vary throughout the day, the control device will adjust the water temperature to maintain the room temperature. The main drawbacks to this method are:

1. A great number of control devices (temperature control valves) would have to be added, and the cost would be high.

2. Adding valves to each device would be very disruptive, since each room would have to be entered, and the piping changed by adding the valve. This would also require a long installation period.

3. Depending on the piping arrangement used, additional bypass piping sections may also have to be added to some systems, so that the new controllers do not adversely affect other areas of the building.

Another way to correct the situation would be to add a temperature controller to the main piping system. This can be accomplished by either replacing the venturi device, or adding a parallel piping loop containing a control valve. The control valve could basically accomplish the same goal as the venturi, mixing district heating water and return water. However, this device could be configured so as to respond to outdoor temperature directly, and to adjust the flow of district heating water and return water to change the supply water temperature. While this system is much better than the existing inducing venturi, it still provides only one point of control within the building. Therefore, every room in the facility will have the same temperature water delivered to it. This is obviously not as good as having every heating device under control, but it is much less expensive, and the majority of the energy savings is still realized. If the sun happens to be shinning on one side of a particular building, it is possible that part of the building might overheat, and the tenants or residents might open their windows.

The use of temperature control valves with outdoor sensors would allow a reduction in the heat supplied to the buildings during mild weather, eliminating the overheating that currently exists. This in turn would result in energy savings, since less heat would be transferred from the system, less heat would have to be provided.

Temperature Control Valves

A three way temperature control valve with a pump, a heat meter system, outdoor air reset, night setback and a pressure regulating valve to minimize district heating pressure surges, will provide the individual building with its own temperature control and not be totally dependent on the district healing system. These new controls will compensate for mild weather and allow reduced night temperatures.

The system described above is recommended for both the Kiev Opera and Ballet House and the Railway Administration Building. For the Opera House, equipment cost is $9,100 the energy savings are estimated at 553 Gcal/year giving a payback of 1.9 years.

For the Railway Building, the system cost is $9,100, the savings is 328 Gcal/year or $2835 and yields a 3.2 year payback.

Thermostatic Control Valves

Individual control valves or radiators will minimize overheating in a space. Installing these valves in the Opera House will save 17.4 Gcal/year, cost about $950 and give a 6.3 year payback.

Ventilation Control

Upgrading the ventilation control on an air handler in the book factory will save 143.5 Gcal/year ($2,813), cost $1,100 and yields a payback of 0.4 years.

4.2 General System Audit

4.2.1 Heat Production

The combination of district heating technology with electrical power generation is more widely used in the Ukraine than in the United States. The Soviet Power industry claims a savings of 25% in fuels over the separate generation of electricity and heat. Thirteen percent of the total installed capacity of thermal power stations are heat and power plants.

Sixty percent of the district heating stations in the Ukraine are more than 17 years old. Only two stations are newer than the audit facility Kiev Thermal Power Plant #5. Based on what the auditors learned at this plant and the fact that most other plants are older, the following general conclusions were made.

The thermodynamic design of stations in the Ukraine is similar to that used in the United States. Stations are based on common modified rankine cycles utilizing many stages of regenerative feed water heating and reheat to increase design efficiency. Super-critical designs are another means used to improve efficiency which is employed more widely in the former Soviet Union than in the United States.

Many Ukrainian and former Soviet power plants of the super-critical design make use of oxygenated feed water control while the standard practice in the United States is to remove the oxygen from the water. In oxygenated feedwater technology, oxygen is added, causing an oxide layer to form on the tube surfaces and thereby prevent further corrosion. This is a great benefit as keeping a cycle free from oxygen infiltration in a conventional cycle is a difficult task. This technology has been used for many years in the former Soviet Union, but is just now being tried in the United States.

The plant management expressed a need for training the younger technical plant staff in the newer available technologies such as those found in the United States. They feel that the new ideas of these personnel are key to the technological improvement of the power generation industry in the Ukraine. Training of this type could be provided for a limited number of people in the United States.

An area in which Ukrainian stations differ from American stations is in the area of instrumentation and controls. The stations seem to make use of a lot of individual recording devices rather than central computer-based systems. The conventional standard seems to be to rely on a large number of chart recorders to keep track of data. The majority of the controls appear to be analog. Digital control technology was not evident in the audit facility and from conversations with station personnel was not available domestically. Some facilities reported they were working with various institutes to develop computer based monitoring systems. Thermal Plant #5 does make use of limited computer technology, but to a smaller extent than in United States' stations of the same age and size.

Control of fans and pumps tends to be through throttling as opposed to variable speed schemes. Personnel at TPS #5 indicated that more work is currently being done in this area. Numerous opportunities are likely to be available throughout the system.

Plant personnel are very concerned about environmental emissions. They have shifted from the use of heavy fuel oil to natural gas because of sulfur dioxide emissions. They have no devices in place to monitor environmental emissions.

The plant management also expressed their opinion that because of the former Soviet Unions emphasis on developing nuclear power technology, development of fossil technology has fallen behind in their country. Because of Chernobyl, there has been a renewed emphasis on fossil power generation.

Private companies are already moving into the Ukrainian market. ABB and Siemens have proposals for improvement work at several facilities.

4.2.2 Thermal Distribution System

The main area of interest in the distribution system has to do with the accelerated external corrosion resulting from high moisture conditions. This problem is of major concern, as the life expectancy of the insulation and the piping is drastically reduced. This problem has been looked at in the specific audit material, and in addition current efforts are under way experimenting with some pipe-within-a-pipe designs.

4.2.3 End-User

The end-users are almost exactly the same in the technology to utilize the district heating water once it enters the building, regardless of whether the customer is industrial, commercial, or residential. This technology utilizes the venturi or elevator to control the temperature within the building, but this device is fixed and cannot respond to external nor internal changes throughout the heating season. Consequently, most buildings suffer from overheating during portions of the heating season. This has been examined extensively in the specific audit sections of this report.

4.3 Replication Potential

4.3.1 System Level

4.3.1.1 Heat Production

The enterprise Kievenergo has a total of six thermal heating plants. Of these, four are older than TPS-5. Also, Ministry personnel expressed the opinion that of all the plants, TPS-5 was one of the best managed. Therefore the potential for similar improvements is likely to be the same or larger at the remaining facilities.

4.3.1.2 Thermal Distribution System

Improvements for the distribution piping system are at the system level, meaning that the corrosion problems occur throughout the distribution system serving Kiev. Therefore, any improvements that could be made to the distribution piping could be extended to all 760 km of piping throughout Kiev.

4.3.1.3 End-Users

The improvements for temperature controls could be applied to thousands of buildings throughout Kiev, since basically all buildings have the same piping scheme. The system that saves the most energy for the least amount of money could be implemented throughout the district heating system in Kiev. However, as mentioned earlier, this system must include a means of metering the heat energy consumption for billing purposes, since the current means of billing is based only on a theoretical calculation for each building.

4.3.2 National Level

4.3.2.1 Heat Production

Thirteen percent of the installed electrical power generation capacity in the Ukraine is in the form of combined electric and district heating plants. Of these, about 72% of the total combined heat production capability is from plants older than TPS-5. Therefore, the potential for similar improvements is likely to be the same or larger at the remaining facilities.

4.3.2.2 Thermal Distribution System

Improvements to the distribution piping system similar to those suggested here may not have a wide replication potential, unless those other areas also have high ground water tables, causing accelerated corrosion and then leaks. The suggested solution of a pipe-within-a-pipe is too expensive to implement unless the problem is very severe, as in Kiev. The number of district heating systems within Ukraine that have this condition is unknown.

4.3.2.3 End-User

The opportunity to implement improved temperature control devices in end-user buildings is almost limitless, since they are almost totally non-existent at this time. This improvement is greatly needed, and can be implemented throughout the country as well as the entire former Soviet Union. Even though the end-users may want to reduce their energy consumption, without the appropriate controls and metering devices they will not be successful, and monthly bills will not be reduced.

APPENDIX A
Payback Computations

ECO-1

Portable Combustion Analyzer - Heat Production - TPS-5

A. Problem

All units of TPS-5 have existing excess oxygen controls and carbon monoxide instrumentation. However, these instruments are difficult to calibrate and their responses time is considered too long by station personnel. Instrument deficiencies sometimes result in incomplete combustion evidenced by small amounts of carbon monoxide not picked up by the existing instrumentation.

B. Proposed solution

By having available two portable combustion analyzers, station personnel will be able to eliminate the adjustments to the instrumentation to eliminate the presence of carbon monoxide. For example, during one test carbon monoxide levels of 0.16% were seen. This amount of CO accounts for roughly a 0.5% decrease in combustion efficiency (see attached calculations). By making a slight adjustment to air flow, the carbon monoxide was eliminated.

C. Analysis

Annual fuel amount burned:	1,832,000 metric tons
Percent Natural Gas:	93.2%
Percent Heavy Fuel Oil:	6.8%
Fuel price	
Natural Gas:	$24/metric ton*
Heavy Fuel Oil:	$17/metric ton*
Cost of the equipment:	$9,400

Potential fuel savings at 0.5% efficiency gain:
(1,832,000 metric tons) * (0.005) = 9,160 metric tons/year

Savings:
((.932) * ($24) + (.068) * ($17)) *(9,160 metric tons/year)
= $215,480/year

Simple Payback:
$9,400/$215,480 = 0.044 years or .52 months or 16 days

* At an exchange rate of 100 rubles per dollar.

ECO-2

Fuel Oil and Gas Meters - Heat Production

A. Problem

The existing gas and oil flow instrumentation at the Kiev 5 Power Plant is considered inaccurate by the plant personnel. The existing setup consists of simple orifice's and pressure drop instrumentation. The plant staff feel that because of the variability of temperature and pressure of the fuels, and deficiencies in the installation of the devices the scheme may yield errors as much as 10%. This situation makes it difficult to assess and justify proposed energy efficiency improvements which the plant staff may wish to implement. Improved instrumentation would allow better measurements of efficiency and provide an incentive for implementing energy related improvements.

B. Proposed solution

Replace the existing flow orifices on the natural gas and heavy fuel oil lines with insertion vortex or annubar technology on the gas lines and helix meters on the oil lines. Ideally, two meters per unit would be desirable. Because of cost constraints, one meter on the natural gas supply and one meter on both the heavy fuel oil supply and heavy fuel oil return are being proposed. Two boilers will be metered, so the total number of meters required will be two for natural gas and four for oil.

C. Analysis

Assumption; Plant proposals will result in a measurable 0.5% improvement in efficiency

Annual fuel amount burned:	1,832,000 metric tons
Percent Natural Gas:	93.2%
Percent Heavy Fuel Oil:	6.8%
Fuel price	
Natural Gas:	$24/metric ton*
Heavy Fuel Oil:	$17/metric ton*
Cost of Flow Meters:	
Natural Gas:	2 * $3,700
Heavy Fuel Oil:	4 * $4,900
Total:	$27,000

Potential fuel savings at 0.5% efficiency gain:
(1,832,000 metric tons) * (0.005) = 9,160 metric tons/year

Savings:
((.923) * ($24) + (.068) * ($17)) * (9,160 metric tons/year) = $215,480/year

Simple payback:
$27,000/$215,480 = 0.125 years or 1.5 months

* At an exchange rate of 100 rubles per dollar.

ECO-3

Oxygen Analyzers - Heat Production - TPS-5

A. Problem

All units of TPS-5 have existing excess oxygen controls and carbon monoxide instrumentation. However, these instruments are difficult to calibrate and their responses time is considered too long by station personnel. Instrument deficiencies sometimes result in incomplete combustion evidenced by small amounts of carbon monoxide not picked up by the existing instrumentation.

B. Proposed solution

By replacing the existing excess oxygen instrumentation with insitu zirconium oxide sensor technology the incomplete combustion can be eliminated. For example, during one test carbon monoxide levels of 0.16% were seen. This amount of CO accounts for roughly a 0.5% decrease in combustion efficiency (see attached calculations for combustion efficiency analyzers). By making a slight adjustment to air flow, the carbon monoxide was eliminated.

C. Analysis

Annual fuel amount burned:	1,832,000 metric tons
Percent Natural Gas:	93.2%
Percent Heavy Fuel Oil:	6.8%
Fuel price	
Natural Gas:	$24/metric ton*
Heavy Fuel Oil:	$17/metric ton*
Cost estimate of Oxygen Instruments:	
Units I and II:	$10,000
Units III and IV:	$13,000

Potential fuel savings at 0.5% efficiency gain:
(1,832,000 metric tons) * (0.005) = 9,160 metric tons/year

Savings:
((.932) * ($24) + (.068) * ($17)) *(9,160 metric tons/year)
= $215,480/year

Simple Payback:
$46,000/$215,480 = 0.21 years or less than 3 months

* At an exchange rate of 100 rubles per dollar.

ECO-4

Portable Combustion Analyzer - Thermal Distribution - Teploset

A. Problem

Teploset operates nine heating system plants. The level of technology available to them does not include electronic instrumentation for the adjustment of controls and equipment to maintain combustion efficiency.

B. Proposed solution

By having available an instrument such as a portable combustion analyzer, station personnel will be able to make adjustments to the instrumentation to eliminate the presence of carbon monoxide and maintain optimum levels of excess air. It is estimated that a modest 0.25% gain in combustion efficiency could be made by the use of such equipment.

C. Analysis

Percent Natural Gas:	100%
Percent Heavy Fuel Oil:	0%

Fuel price

Natural Gas:	$24/metric ton*
Heavy Fuel Oil:	$17/metric ton*

Consider the Bilichi peaker capacity of 300 Gcal per hour operating at minimum load:

Minimum load (180 Gcal) fuel consumption at 87% efficiency:
((180 Gcal/hr)/(.87))/((.012166 Gcal/kg)) = 17,006 kg/hr
or 17.006 metric tons/hr

Cost of Equipment: $4,700

Potential fuel savings at 0.25% efficiency gain:
(17.006 metric tons/hr) * (0.0025) = 0.042 metric tons/hr

Savings:
.042 metric tons/hr * $24/ metric ton = $1.02/hr

Simple Payback:
$4,700/$1.02 = 4,600 hrs or about 6.4 months

* At an exchange rate of 100 rubles per dollar.

ECO-5

Portable Combustion Analyzer - Thermal Distribution System - Housing District

A. Problem

The housing department maintains and operates approximately 113 district heating peaking units. An adjustment group makes measurements about every six months and adjusts the controls accordingly. Measurements are not easy to make because an electronic combustion efficiency analyzer is not available.

B. Proposed solution

By having available a portable combustion analyzer, station personnel will be able to make adjustments to the instrumentation to eliminate the presence of carbon monoxide. For example, during on test carbon monoxide levels of 0.1% were seen. this amount of CO accounts for roughly a 0.8% decrease in combustion efficiency (see attached calculations). By having available an analyzer adjustments may be made to eliminate carbon monoxide and incomplete combustion.

C. Analysis

Percent Natural Gas:	100%
Percent Heavy Fuel Oil:	0%
Fuel price	
Natural Gas:	$24/metric ton*
Heavy Fuel Oil:	$17/metric ton*

To be conservative, analysis is based upon minimum load of smallest peaker:

Minimum load (0.22 Gcal) fuel consumption at 77% efficiency:
((.22 Gcal/hr)/(.77))/((.012166 Gcal/kg)) = 23.48 kg/hr

The authority operates 113 peakers:
23.48 kg/hr * 113 = 2,653 kg/hr or 2.653 metric tons/hr

Potential fuel savings at 0.8% efficiency gain:
(2.653 metric tons) * (0.008) = 0.021 metric tons/hr

Savings:
.021 metric tons/hr * $24/ metric ton = $.50/hr

Simple Payback:
$4,700/$0.50 = 9,400 hrs or about 13 months

* At an exchange rate of 100 rubles per dollar.

ECO-6

Energy Analysis

Project Name: Enduser - Commercial - Railway Office Building
Location: Kiev
Date: 4/27/92

Proposed Improvement: Temperature Control Valve

Description of existing system:

The existing heating system takes heat from the district heating system and utilizes an inducing venturi to mix return water with supply water. The mixed water is then distributed to the facility for space heating. Since the venturi cannot change temperatures or flow rates, this system is dependent upon the district heating supply water temperature change to provide the correct amount of heat to the facility. Over-heating of the space occurs during mild to moderate weather since the existing system cannot respond to weather changes. Occupants of the facility respond by opening windows to cool off the space, wasting the heat that is being provided.

Description of Proposal:

Provide a three way mixing valve to take the district heating supply water and blend with the return water. This system would be controlled as a function of the outdoor temperature and the indoor temperature. This control scheme would allow the heat supplied to the building to be controlled to follow the changes in outdoor temperature. This will reduce the over-heating of the building. The control valve would be installed in parallel to the existing system, so that the measurements can be taken from either system to show the conservation impact. Although the best method to save energy would be to control every radiator and heating device, the cost and time to do this would be prohibitive. The proposed scheme will save the majority of the heat for the most cost effective price. In addition, night setback and optimal start control strategies will be implemented to optimize the energy savings.

Analysis:

Heating consumption for 1991: 3072.153 Gcal, with a design parameter of 1.367 Gcal/hour. Night setback usually saves 10% of the annual consumption for a commercial building (typically 2% per degree C setback), assuming a 5 degree setback over night and weekends. Therefore, estimated setback savings = 307 Gcal.

Over heating savings are based on the design parameter and a 10% savings during one month of mild weather. Therefore:

E = 1.367 Gcal/hr * 0.1 * 8 hr/day * 20 days = 21 Gcal.

Total Savings = 307 + 21 Gcal = 328 Gcal

Estimated Cost Savings = 328 Gcal * 907.57 R/Gcal
= 297,700 R/year
= $2,835 /year

Estimated Cost (including heat meter) = $9,100

Payback = $9,100/$2,835 /year = 3.2 years

ECO-7

Energy Analysis

Project Name: Enduser - Commercial - Kiev Opera & Ballet House
Location: Kiev
Date: 4/27/92

Proposed Improvement: Temperature Control Valves

Description of existing system:

The existing piping entrance from the district heating system is separated into domestic water heating and space heating. The space heating piping has the typical inducing venturi to mix supply and return water. since this device cannot change with changes in the weather, the building is overheated during mild weather. As a result, windows are opened to moderate or control room temperatures. This energy is then wasted as it goes out the windows.

Description of proposal:

A three way control valve should be installed to blend the supply water and the return water to provide the proper temperature mixed water that will satisfy the heated spaces. This valve would be controlled by an outdoor sensor and a room sensor, so that the heated spaces are always kept at a constant temperature. The control valve would be installed in parallel to the existing system, so that it is possible to switch between the two heating systems to show energy consumption. A circulating pump would have to be added in case the valve closes and there is no pressure to circulate the mixed water. This proposal will reduce the overheating of the building, and lower the total energy consumption and cost. This should also eliminate the need to open windows to cool off the building. In addition, night setback and optimal start control strategies will be implemented to gain further savings.

Analysis:

Heating consumption for 1991: 5199.774 Gcal, with a design parameter of 2.902 Gcal/hour. Night setback usually saves 10% of the annual consumption (typically 2% per °C setback), assuming a 5 degree setback over night. Therefore, the estimated savings is 520 Gcal per year.

Overheating savings are based on the design parameter and a ten percent savings during one month of mild weather. Therefore:

E = 2.092 Gcal/hr * 0.1 * hr/day * 20 days = 33 Gcal

Total Savings = 520 + 33 Gcal = 553 Gcal

Estimated Cost Savings = 553 Gcal * 907.57 R/Gcal
= 501,900 R/year
= $4,780 /year

Estimated Cost (including heat meter) = $9,100

Payback = $9,100/$4,780 /year = 1.9 years

ECO-8

Energy Analysis

Project Name: Enduser - Commercial - Kiev Opera and Ballet House
Location: Kiev
Date: 4/27/92

Proposed Improvement: Self Contained Thermostatic Control Valves for Radiators

Description of existing system:

The rehearsal halls of the Opera building are used almost daily. In the mild weather months, the rooms become quickly overheated, and the participants open the windows to cool the rooms, even though the heating system is operating.

Description of proposal:

Individual thermostatic control valves on the radiators will allow the heat to be maintained at a comfortable temperature, so that in the mild weather the windows will not be opened when the heating system is operating. The specific piping arrangement used will allow some of the valves to control one or more radiators (see sketch). In addition, the owners will have to provide some bypass piping sections so as to provide proper flow if one of the valves closes.

Analysis:

The rehearsal rooms occupy approximately 26% of the total building space, or roughly 17,177 m^3. Over heating savings are based on the design parameter and a 10% savings over two months of mild weather (due to the physical nature of the use of the rehearsal rooms, the over heating is expected to occur over a longer period of time).

E = 2.092 Gcal/hr * 0.1 * 8 hr/day * 40 days * 0.26 = 17.4 Gcal

Estimated Cost Savings = 17.4 Gcal * 907.57 R/Gcal
= 15,800 R/year
= $150 /year

Estimated Cost = 27 valves * $35.19 each = $950

Payback = $950/$150 /year = 6.3 years

ECO-9

Energy Analysis

Project Name: Enduser - Industrial - Kiev Book Factory
Location: Kiev
Date: 4/28/92

Proposed Improvement: Ventilation Control

Description of existing system:

The facility operates two eight hour shifts a day, five days a week. Ventilation (designed at 30,000 m^3/hr) is turned on and off manually to make up for air exhausted from the many exhaust fans in the facility. There are two outside air louvers, approximately 61 by 101.5 cm. The existing dampers don't function, and therefore the outside air is uncontrolled. The damper operator motor is burned out. Some of the filters are missing, the others are extremely dirty and obviously have not been changed in years. The coil is extremely dirty, hindering heat transfer. The coil is designed for 340,000 kcal/hr.

Description of proposal:

Remove existing dampers and operator, and replace with new insulated dampers with edge and jamb seals and a new operator. Provide a new seven day time clock and wire damper operator to clock. Clean coil and provide new filters, plus two sets of replacement filters.

Analysis:

The ventilation is assumed to be left on after the last shift of day leaves the building. Therefore, the energy savings are:

Using a degree day analysis for annual energy consumption:

$$E = (0.34\ \text{Gcal/hr} * 3870\ \text{C-day} * 8\ \text{hr/day} * 0.6\ C_D)/(22 - (-22)\,°\text{C}) = 143.5\ \text{Gcal/yr}$$

Estimated Cost Savings = 143.5 Gcal/yr * 2057.37 R/Gcal
= 295,233 R/yr
= $2813 /yr

Estimated Cost = $1,100

Payback = $1,100/$2,813 /yr = .4 years

ECO-10

Energy Analysis

Project Name: Enduser - Residential - Housing
Location: Kiev
Date: 5/15/92

Proposed Improvement: Pressure Regulator

Description of existing system:

The existing district heating piping temperature entering the housing buildings is not controlled at the buildings. consequently the buildings are often over heated, and the tenants open the windows to cool the spaces. The piping includes the standard elevator, which does not respond to changes in temperature or hourly fluctuations due to sun shine, occupancy changes, etc.

Description of proposal:

Provide a pressure regulator to eliminate the over heating within the housing buildings. This device will eliminate the fluctuations of the pressure within the district heating piping system, which contributes to a large portion of the over heating in residential buildings.

Analysis:

Based on a typical housing building of approximately 20,000 cubic meters and a heating parameter of 0.7 Gcal/hr, the over heating savings are estimated as:

E = 0.7 Gcal/hr * 10% savings * 24 hr/day * 60 days = 101 Gcal

Estimated Cost Savings = 101 Gcal * 42 R/Gcal
= 4,242 R/yr
= $40 /yr

Estimated Cost (including heat meter) = $1,000

Payback = $1,000/$40 per year = 25.0 years

ECO-11

Energy Analysis

Project Name: Thermal Distribution System - Distribution Piping
Location: Kiev
Date: 4/28/92

Description of existing system:

In parts of the city the ground water table is very high, and although the piping is situated in pipe tunnels, the piping many times is in wet or very moist conditions. The humidity in the peiping tunnels has been estimated at between 60 and 70% relative humidity. This high moisture condition causes severe corrosion problems, in addition to deteriorating the piping insulation. The piping insulation typically has a life expectancy of only seven years, while the pipe has a life expectancy of twelve years. Different design techniques have been attempted, such as the use of a vapor barrier type paint on the piping, and also an aluminum coating. These efforts have not been very successful.

Although no portions of existing piping sections were exposed or visible, new piping installation was observed.

Description of proposal:

A pipe within a pipe system could be used, where the outer pipe is constructed of non-corrosive material and is sealed air and moisture tight. The outer pipe would not have to withstand the high temperature and pressure that the inner pipe does, and so could be made out of material such as PVC (poly-vinyl chloride). This should extend the life of the piping and the insulation to more typical periods (around 30 years). The energy savings would be from longer insulation life and reduce water leakage.

Analysis:

Information received indicates that leakage accounts for approximately 1,200 to 1,500 m^3/hr (5,300 to 6,600 gallons/minute). Using an average water volume loss, the water temperature on a design basis (120 °C minus 10 °C make up water temperature), and an average boiler efficiency of 90%, the energy loss on a design basis is calculated as:

$$E = 1350\ m^3/hr * 1{,}000\ kg/m^3 * kcal/kg\text{-}C * 110\,°C/0.9 = 165\ Gcal/hr = (0.65\ GBTU/hr)$$

However, the discharge water temperature varies from the district heating system, so the above equation is valid only when the discharge temperature is 120 °C. Since bin weather data for Kiev was not available, an average discharge water temperature analysis is used. An average annual discharge water temperature of 95 °C is used. Therefore, the temperature difference is 85 °C (95 °C - 10 °C). The above equation can then be modified by adjusting for the temperature, and then extending to the full year (8,760 hr).

$$E = 165\ Gcal/hr * 85/110 * 8{,}760\ hr = 1116.9\ Tcal/yr = (4.4\ TBTU/yr)$$

Using the current fuel costs for natural gas, since that is the predominant fuel, the annual cost of the water loss is:

$$Cost = 1116.9\ Tcal/yr * 205.2\ R/Tcal = 229{,}233\ R/yr = (\$2{,}183\ /yr)$$

Since the cost of replacing the piping and shipping it from the U.S. would be excessive, it is not practical to consider this proposal further.

ECO-12

Energy Analysis

Project Name: Heat Production - TPS-5
Location: Kiev
Date: 8/92

Proposed Improvement: Personal Computer

Description of existing situation:

Currently the performance calculations done routinely at TPS-5 are based on algorithms developed by the plant designers. More sophisticated calculations such as boiler efficiency by the heat loss method or turbine cycle efficiency need to be carried out entirely by means of manual calculations which is a time consuming task and as they are therefore not done.

Description of proposal:

A personal computer would make frequent performance calculations more practical and give the staff a tool to analyze the systems on a more frequent basis. It would also allow them to more conveniently monitor and track the level of performance and identify degradation or improvement.

Currently the personnel at TPS-5 are struggling to incorporate newer technologies into their systems. Computer technology is not common and many of the technical staff have no opportunity to become exposed to it. A computer dedicated for use by the performance staff could serve as an introduction to computer technology for them and become a starting point for them to incorporate more sophisticated control and monitoring technology into their systems.

While it is difficult to quantify the economic paybacks of a computer that will be used for so many tasks, it is likely that the first use for this computer will be to analyze the data produced by the combustion analyzers being supplied. The computer can be used by the staff to track boiler efficiency over a period of time and can otherwise enhance the usefulness of the combustion analyzers. Incorporating the cost of the computer into the energy conservation measure of purchasing combustion analyzers would raise the payback of that measure form 16 to 21 days.

APPENDIX B
Combustion Efficiency Calculations

Combustion Efficiency Data are presented in the order of the areas audited as indicated in the Table of Contents.

First: Heat Production (TPS-5)
Second: Heat Production (TPS-5, peaker)
Third: Thermal Distribution System - Teploset-Belichi Plant
Fourth: Thermal Distribution System - Housing Distribution System

Appendix B, Combustion Efficiency Calculations

Combustion efficiency calculations were preformed at three of the four main TEPS-5 units, TEPS-5 hot water peaker number 3, the Belichi peaking plant operated by Teploset and two small peakers operated by the Housing Department.

Combustion efficiency calculations were based on typical analysis of the fuels burned which were provided by the Ministry and are listed below;

Mazout Fuel Oil		Natural Gas	
Heating Value	9216 KCal\kg	Heating value	8115.0 Kcal/kg
Carbon %	85.7	CH4 %	95
Sulfur %	2.3	C2H6 %	0.5
Oxygen %	0.8	C3H8 %	0.5
Nitrogen %	0.1	N2 %	1.5
Hydrogen %	10.1	CO2 %	1.1
		O2 %	1.5

The TEPS-5 units III and IV were burning a combination of Natural gas and Mazout during the data collection. For the analysis a composite fuel composition was calculated based on the firing percentages for each fuel. A break down of the fuels being burned at the time of the tests is given below;

	Mazout		Natural Gas	
	#of burners	percent	#of burners	percent
Boiler 2	18	100		
Boiler 3	13	81	3	19
Boiler 4	14	87.5	2	12.5
HW peaker #3				100
Bilichi Peaker				100
Large and Small Housing peakers				100

The composite fuel analysis for TEPS-5 units III and IV are shown below:

BOILER NUMBER 3
COMPOSITE FUEL ANALYSIS

	81% NAT GAS	19 % MAZOUT	COMPOSITE
CH4	95		76.95
C2H6	0.5		0.41
C3H8	0.5		0.41
C		85.7	16.28
O2	1.5	0.8	1.37
N2	1.5	0.12	1.24
H2		10.1	1.92
CO2	1.1		0.89
S		2.33	0.44
ASH		0.975	0.19
TOTAL			100.09

BOILER NUMBER 3
COMPOSITE FUEL ANALYSIS CONTINUED

BTU/LB	21900	16590	20891.1

MOLES CARBON AND HYDROGEN

CH4	76.95	153.9
C2H6	0.81	1.215
C3H8	1.215	1.62
C	16.283	
H2		1.919
	95.26	158.65

BOILER NUMBER 4
COMPOSITE FUEL ANALYSIS

87.5% NAT GAS	12.5% MAZOUT		COMP.
CH4	95		83.13
C2H6	0.5		0.44
C3H8	0.5		0.44
C		85.7	10.71
O2	1.5	0.8	1.41
N2	1.5	0.12	1.33
H2		10.1	1.26
CO2	1.1		0.96
S		2.33	0.29
ASH		0.975	0.12
			100.09

BTU/LB	21900	16590	21236.25

MOLES CARBON AND HYDROGEN

CH4	83.125	166.25
C2H6	0.875	1.3125
C3H8	1.3125	1.75
C	10.7125	
H2		1.2625
	96.03	170.58

The following pages show the combustion data collected by use of the Enerac 2000 and station instruments and the efficiency calculations for each boiler tested.

KIEV PLANT 5 BOILER 2 COMBUSTION TEST DATA

LEFT SIDE RUN 1						AVG
OXYGEN	2.9	2.7	2.8	2.7	2.5	2.72
CO	4	4	4	4	8	4.8
CO2	10.1	10.3	10.2	14.5	14.7	11.96
COMB	0.12	0.17	0.17	0.2	0.22	0.176
EXCS AIR	15	13	14	14	13	13.8
NOX	397	391	396	391	394	393.8
SO2	3681	3719	3700	3693	3723	3703.2

LEFT SIDE RUN 2						AVG
OXYGEN	2.2	2	2	1.8	1.8	1.96
CO	8	7	10	7	11	8.6
CO2	14.9	15.1	15.1	15.2	15.2	15.1
COMB	0.19	0.23	0.26	0.25	0.32	0.25
EXCS AIR	11	10	10	9	9	9.8
NOX	402	393	401	391	397	396.8
SO2	3580	3543	3545	3530	3488	3537.2

RIGHT SIDE RUN 1						AVG
OXYGEN	2.8	3.2	3.5	3.2	4	3.34
CO	8	7	7	7	7	7.2
CO2	14.4	14.1	13.9	14.1	13.5	14
COMB	0.43	0.38	0.37	0.4	0.4	0.396
EXCS AIR	15	18	19	17	22	18.2
NOX	369	362	343	345	336	351
SO2	3075	2991	2912	2902	2821	2940.2

RIGHT SIDE RUN 2						AVG
OXYGEN	3.5	3.5	3.8	3.6	3.6	3.6
CO	7	7	11	14	14	10.6
CO2	13.8	13.9	13.7	13.8	13.8	13.8
COMB	0.41	0.41	0.4	0.42	0.4	0.408
EXCS AIR	19	19	21	20	20	19.8
NOX	340	338	326	329	332	333
SO2	2780	2737	2709	2720	2673	2723.8

FOUR RUN AVERAGE					AVG
OXYGEN	2.72	1.96	3.34	3.6	2.905
CO	4.8	8.6	7.2	10.6	7.8
CO2	11.96	15.1	14	13.8	13.72
COMB	0.176	0.25	0.396	0.408	0.308
EXCS AIR	13.8	9.8	18.2	19.8	15.4
NOX	393.8	396.8	351	333	368.7
SO2	3703	3537	2940	2724	3226

STATION BOILER 2

EXCS AIR 15.5

FUEL 16590 BTU/LB

FUEL CONSTIT-UENT	PER FUEL UNIT LB	MOL WT DIV SOR	MOLS PER CONST-UENT	O2 MULTI-PLIER	O2 REQ THEO	CO2	SO2	O2	N2	H2O	CO
C TO CO2	85.7	12	7.14	1	7.14	7.14					
C TO CO		12	0.00	0.5	0.00						0.00
H2	10.08	2	5.04	0.5	2.52					5.04	
S	2.33	32	0.07	1	0.07		0.07				
O2	0.8	32	0.03	-1	-0.03						
N2	0.12	28	0.00						0.00		
CO2		44	0.00								
H20		18	0.00							0.00	
ASH	0.975										
SUM	99.03		12.28		9.71						
O2 REQ. THEORY					9.71						
O2 EXCESS					1.50			1.50			
O2 TOTAL					11.21						
N2 SUPPLIED					42.17				42.17		
AIR SUPPLIED DRY					53.38						
H2O IN AIR					1.13					1.13	
AIR SUPPLIED DRY					54.51						
						7.14	0.07	1.50	42.17	6.17	0.00
DELTA T					205.00						
SPECIFIC HEATS						9.00	9.20	7.10	7.00	8.10	

	TOTAL
LOSS IN DRY GAS CO2	13176.38
LOSS IN DRY GAS SO2	137.32
LOSS IN DRY GAS O2	2190.48
LOSS IN DRY GAS N2	60514.83
LOSS IN DRY GAS CO	0.00
LOSS IN H2O IN AIR	1879.14
SENS HEAT H2O IN FUEL	8368.92
LATENT HEAT	94348.80
TOTAL LOSSES	180615.87
TOTAL ENERGY INPUT	1658970
PERCENT LOSSES	10.88723
BOILER EFFICIENCY	89.11

KIEV POWERPLANT 5 UNIT 3 COMBUSTION TEST DATA

LEFT SIDE RUN2

OXYGEN	1.7	1.4	1.5	1.5	1.5	1.52
CO	4	4	2	0	4	2.8
CO2	10.8	11	11	11	11	10.96
COMB	0	0.03	0.03	0.03	0.03	0.024
EXCS AIR	7	7	7	7	7	7
NOX	337	340	339	339	332	337.4
SO2	452	459	474	474	502	472.2

RIGHT SIDE RUN1

OXYGEN	1.3	1.4	1.3	1.3	1.3	1.32
CO	100	92	133	81	137	108.6
CO2	11.1	11	11	11.1	11.1	11.06
COMB	0.45	0.28	1.06	0.19	0.82	0.56
EXCS AIR	6	6	6	6	6	6
NOX	330	329	331	330	326	329.2
SO2	291	313	333	353	346	327.2

RIGHT SIDE RUN2

OXYGEN	1.4	1.4	1.4	1.4	1.5	1.42
CO	7	18	6	4	4	7.8
CO2	11	11	11	11	10.9	10.98
COMB	0.12	0.24	0.07	0.06	0.05	0.108
EXCS AIR	6	6	7	7	7	6.6
NOX	321	317	320	327	322	321.4
SO2	305	312	50	327	334	265.6

FOUR RUN AVERAGE

					AVG	
OXYGEN	1.38	1.52	1.32	1.42	1.41	%
CO	33.8	2.8	108.6	7.8	38.25	MGM
CO2	11	10.96	11.06	10.98	11	%
COMB	0.116	0.024	0.56	0.108	0.202	%
EXCS AIR	6.2	7	6	6.6	6.45	%
NOX	333.4	337.4	329.2	321.4	330.3	MGM
SO2	365.4	472.2	327.2	265.6	357.6	MGM

STATION BOILER 3

EXCS AIR 6.5

FUEL 20891 BTU/LB

FUEL CONSTIT-UENT	PER FUEL UNIT LB	MOL WT DIV SOR	MOLS PER CONST-UENT	O2 MUL TPL	O2 REQ THEO	CO2	SO2	O2	N2	H2O	CO
C TO CO2	1143	12	95.26	1	95.26	95.3					
C TO CO	0	12		0.5	0.00						0.0
H2	317	2	158.65	0.5	79.33					158.7	
S	14	32	0.44	1	0.44		0.4				
O2	44	32	1.37	-1	-1.37						
N2	35	28	1.24						1.2		
CO2	39	44	0.89								
H20	0	18								0.0	
ASH											
SUM	1592		257.84		173.65						
O2 REQ. THEORY					173.65						
O2 EXCESS					11.29			11.3			
O2 TOTAL					184.94						
N2 SUPPLIED					695.38				695.4		
AIR SUPPLIED DRY					880.32						
H2O IN AIR					18.66					18.7	
AIR SUPPLIED DRY					898.98						
						95.3	0.4	11.3	696.6	177.3	0.0
DELTA T					200.00						
SPECIFIC HEATS						9.0	9.2	7.1	7.0	8.1	

	TOTAL
LOSS IN DRY GAS CO2	171464.40
LOSS IN DRY GAS SO2	804.08
LOSS IN DRY GAS O2	16028.17
LOSS IN DRY GAS N2	975259.70
LOSS IN DRY GAS CO	0.00
LOSS IN H2O IN AIR	30233.59
SENS HEAT H2O IN FUEL	257013.00
LATENT HEAT	2969928.00
TOTAL LOSSES	4420730.94
TOTAL ENERGY INPUT	34864624.8
PERCENT LOSSES	12.6797032
BOILER EFFICIENCY	87.32

kIEV PLANT NO. FIVE UNIT 4 COMBUSTION TEST DATA

LEFT SIDE RUN 1						AVG
OXYGEN	1.8	1.9	1.8	1.7	1.6	1.76
CO	4	7	4	7	7	5.8
CO2	10.8	10.7	10.8	10.8	10.9	10.8
COMB	0.08	0.09	0.08	0.11	0.1	0.092
EXCS AIR	9	9	9	8	8	8.6
NOX	275	276	278	274	277	276
SO2	80	81	81	87	101	86

LEFT SIDE RUN 2						
OXYGEN	1.9	1.7	1.9	1.9	1.7	1.82
CO	7	4	4	4	7	5.2
CO2	10.7	10.8	10.7	10.7	10.8	10.74
COMB	0.09	0.1	0.13	0.13	0.12	0.114
EXCS AIR	9	8	9	9	8	8.6
NOX	267	267	270	270	263	267.4
SO2	14	58	86	115	136	81.8

RIGHT SIDE RUN 1						
OXYGEN	1.3	1.4	1.3	1.3	1.3	1.32
CO	50	36	69	154	45	70.8
CO2	11.1	11	11.1	11.1	11	11.06
COMB	0.28	0.15	0.35	1.19	0.13	0.42
EXCS AIR	6	6	6	6	6	6
NOX	278	277	282	279	278	278.8
SO2	63	70	76	78	99	77.2

RIGHT SIDE RUN 2						
OXYGEN	1.3	1.1	1.3	1.5	1.3	1.3
CO	103	285	124	170	244	185.2
CO2	11.1	11.1	11.1	11	11.1	11.08
COMB	0.37	0.31	0.31	0.3	2.08	0.674
EXCS AIR	5	6	6	7	6	6
NOX	259	256	256	262	255	257.6
SO2	106	131	131	134	130	126.4

FOUR RUN AVERAGE					AVG	
OXYGEN	1.76	1.82	1.32	1.3	1.55	%
CO	5.8	5.2	70.8	185.	66.7	MGM
CO2	10.8	10.7	11.0	11.0	10.9	%
COMB	0.092	0.11	0.42	0.67	0.32	%
EXCS AIR	8.6	8.6	6	6	7.3	%
NOX	276	267.	278.	257.	269.	MGM
SO2	86	81.8	77.2	126.	92.8	MGM

STATION BOILER 4

EXCS AIR 7.3

FUEL 21236 BTU/LB

FUEL CONSTIT-UENT	PER FUEL UNIT LB	MOL WT DIV SOR	MOLS PER CONST-UENT	O2 MUL TPL	O2 REQ THEO	CO2	SO2	O2	N2	H2O	CO
C TO CO2	1152	12	96.02	1	96.02	96.0					
C TO CO	0	12	0.00	0.5	0.00						0.0
H2	341	2	170.57	0.5	85.29					170.6	
S	9	32	0.29	1	0.29		0.3				
O2	45	32	1.41	-1	-1.41						
N2	37	28	1.33						1.3		
CO2	42	44	0.96								
H2O	0	18								0.0	
ASH											
SUM	1627		270.58		180.18						
O2 REQ. THEORY					180.18						
O2 EXCESS					13.15			13.2			
O2 TOTAL					193.34						
N2 SUPPLIED					726.95				726.9		
AIR SUPPLIED DRY					920.29						
H2O IN AIR					19.51					19.5	
AIR SUPPLIED DRY					939.80						
						96.0	0.3	13.2	728.3	190.1	0.0
DELTA T					190.00						
SPECIFIC HEATS						9.0	9.2	7.1	7.0	8.1	

	TOTAL
LOSS IN DRY GAS CO2	164194.20
LOSS IN DRY GAS SO2	508.67
LOSS IN DRY GAS O2	17743.98
LOSS IN DRY GAS N2	968607.40
LOSS IN DRY GAS CO	0.00
LOSS IN H2O IN AIR	30025.99
SENS HEAT H2O IN FUEL	262507.23
LATENT HEAT	3193070.40
TOTAL LOSSES	4636657.88
TOTAL ENERGY INPUT	35639490.6
PERCENT LOSSES	13.0098882
BOILER EFFICIENCY	86.99

TPS-5 PEAKER COMBUSTION DATA RUN 1

											AVG
STACK TEMP:	103	104	103	102	102	102	101	104	103	102	102.
AMB TEMP:	19	18	18	18	18	18	18	18	17	17	17.9
CO:	0	1	0	4	2	2	2	2	3	2	1.8
O2:	6.6	6.3	6.2	7.6	7.8	7.5	7.8	7.7	7.8	7.9	7.32
COMB:	0	0	0	0	0	0	0	0	0	0	0
CO2:	8.1	8.3	8.3	7.5	7.4	7.5	7.4	7.5	7.4	7.3	7.67
EXCESS AIR:	41	38	37	51	53	51	53	52	53	55	48.4
COMB EFF	85.8	85.8	85.8	85.6	85.4	85.4	85.4	85.2	85.4	85.3	85.5
NOX:	88	88	89	79	78	80	79	79	81	79	82
SULFUR DIOXIDE:	8	8	4	8	8	12	8	4	8	4	7.2

PEAKER TPS-5 RUN 2 (100 GCAL/HR)

												AVG
STACK TEMP:	125	126	124	125	124	124	123	124	116	122	124	123.4
AMB TEMP:	15	16	15	15	15	15	15	15	15	15	15	15.1
CO:	4	4	4	7	4	4	4	5	4	4	4	4.4
O2:	3.8	4	4.2	3.9	4	4	4.2	4.3	4.2	4	4.1	4.1
COMB:	0	0	0	0	0	0	0	0	0	0	0	0.0
CO2:	9.6	9.5	9.4	9.6	9.5	9.6	9.5	9.4	9.4	9.5	9.5	9.5
EXCESS AIR:	20	21	23	21	21	21	22	23	23	21	22	21.6
COMB EFF:	85.2	85.1	85.2	85.2	85.2	85.2	85.1	85.1	85.2	85.2	85.2	85.2
NOX:	144	141	141	143	142	147	143	145	144	146	143	143.5
SO2:	8	8	8	8	8	8	8	4	8	4	0	6.5

STATION TPS 5 PEAKER RUN 1 (60KCAL/HR)

EXCS AIR 48.4

FUEL 21900 BTU/LB

FUEL CONSTIT-UENT	PER FUEL UNIT LB	MOL WT DIV SOR	MOLS PER CONST-UENT	O2 MUL TPL	O2 REQ THEO	CO2	SO2	O2	N2	H2O	CO
C TO CO2	1170	12	97.50	1	97.5	97.5					
C TO CO	0	12		0.5	0.0						0.0
H2	387	2	193.50	0.5	96.8					193.5	
S	0	32		1	0.0		0.0				
O2	48	32	1.50	-1	-1.5						
N2	42	28	1.50						1.5		
CO2	48	44	1.10								
H2O	0	18								0.0	
ASH											
SUM	1695.		295.10		192.8						
O2 REQ. THEORY					192.8						
O2 EXCESS					93.3			93.3			
O2 TOTAL					286.0						
N2 SUPPLIED					1075.5				1075.5		
AIR SUPPLIED DRY					1361.6						
H2O IN AIR					28.9					28.9	
AIR SUPPLIED DRY					1390.4						
						97.5	0.0	93.3	1077.0	222.4	0.0
DELTA T					137.4						
SPECIFIC HEATS						9.0	9.2	7.1	7.0	8.1	

	TOTAL
LOSS IN DRY GAS CO2	120568.50
LOSS IN DRY GAS SO2	0.00
LOSS IN DRY GAS O2	91009.10
LOSS IN DRY GAS N2	1035872.22
LOSS IN DRY GAS CO	0.00
LOSS IN H2O IN AIR	32124.98
SENS HEAT H2O IN FUEL	215353.89
LATENT HEAT	3622320.00
TOTAL LOSSES	5117248.69
TOTAL ENERGY INPUT	37129260
PERCENT LOSSES	13.7822533
BOILER EFFICIENCY	86.22

STATION TPS 5 PEAKER RUN 2 (100KCAL/HR)

EXCS AIR 21.6

FUEL 21900 BTU/LB

FUEL CONSTIT-UENT	PER FUEL UNIT LB	MOL WT DIV SOR	MOLS PER CONST-UENT	O2 MUL TPL	O2 REQ THEO	CO2	SO2	O2	N2	H2O	CO
C TO CO2	1170	12	97.50	1	97.5	97.5					
C TO CO	0	12		0.5	0.0						0.0
H2	387	2	193.50	0.5	96.8					193.5	
S	0	32		1	0.0		0.0				
O2	48	32	1.50	-1	-1.5						
N2	42	28	1.50						1.5		
CO2	48	44	1.10								
H2O	0	18								0.0	
ASH											
SUM	1695.		295.10		192.8						
O2 REQ. THEORY					192.8						
O2 EXCESS					41.6			41.6			
O2 TOTAL					234.4						
N2 SUPPLIED					881.3				881.3		
AIR SUPPLIED DRY					1115.7						
H2O IN AIR					23.7					23.7	
AIR SUPPLIED DRY					1139.3						
						97.5	0.0	41.6	882.8	217.2	0.0
DELTA T					43.4						
SPECIFIC HEATS						9.0	9.2	7.1	7.0	8.1	

	TOTAL
LOSS IN DRY GAS CO2	38083.50
LOSS IN DRY GAS SO2	0.00
LOSS IN DRY GAS O2	12829.10
LOSS IN DRY GAS N2	268189.73
LOSS IN DRY GAS CO	0.00
LOSS IN H2O IN AIR	8314.68
SENS HEAT H2O IN FUEL	68022.99
LATENT HEAT	3622320.00
TOTAL LOSSES	4017760.00
TOTAL ENERGY INPUT	37129260
PERCENT LOSSES	10.8210074
BOILER EFFICIENCY	89.18

VILLAGE PEAKER COMBUSTION DATA			AVG
STACK TEMPERATURE:	17	18	17.5
AMBIENT TEMPERATURE:	21	21	21
CARBON MONOXIDE:	0	0	0
OXYGEN:	6.5	6.7	6.6
COMBUSTIBLE GASES:	0	0	0
CARBON DIOXIDE:	8.1	8	8.05
EXCESS AIR:	40	42	41
COMBUSTION EFFICIENCY:	94.7	94.7	94.7
OXIDES of NITROGEN:	72	70	71
SULFUR DIOXIDE:	8	4	6

STATION VILLAGE PEAKER

EXCS AIR 41

FUEL 21900 BTU/LB

FUEL CONSTIT-UENT	PER FUEL UNIT LB	MOL WT DIV SOR	MOLS PER CONST-UENT	O2 MUL TPL	O2 REQ THEO	CO2	SO2	O2	N2	H2O	CO
C TO CO2	1140	12	95.00	1	95.0	95.0					
C TO CO	0	12		0.5	0.0						0.0
H2	387	2	193.50	0.5	96.8					193.5	
S	0	32		1	0.0		0.0				
O2	48	32	1.50	-1	-1.5						
N2	42	28	1.50						1.5		
CO2	48	44	1.10								
H2O	0	18								0.0	
ASH											
SUM	1665		292.60		190.3						
O2 REQ. THEORY					190.3						
O2 EXCESS					78.0			78.0			
O2 TOTAL					268.3						
N2 SUPPLIED					1008.6				1008.6		
AIR SUPPLIED DRY					1276.9						
H2O IN AIR					27.1					27.1	
AIR SUPPLIED DRY					1304.0						
						95.0	0.0	78.0	1010.1	220.6	0.0
DELTA T					108.60						
SPECIFIC HEATS						9.0	9.2	7.1	7.0	8.1	

	TOTAL
LOSS IN DRY GAS CO2	92853.00
LOSS IN DRY GAS SO2	0.00
LOSS IN DRY GAS O2	60144.61
LOSS IN DRY GAS N2	767900.37
LOSS IN DRY GAS CO	0.00
LOSS IN H2O IN AIR	23812.30
SENS HEAT H2O IN FUEL	170214.21
LATENT HEAT	3622320.00
TOTAL LOSSES	4737244.49
TOTAL ENERGY INPUT	36472260
PERCENT LOSSES	12.9886234
BOILER EFFICIENCY	87.01

c4

101

HOUSING PEAKER (SMALL) COMB. DATA					AVG
STACK TEMPERATURE:	34	34	34	32	33.50
AMBIENT TEMPERATURE:	33	33	33	33	33.00
CARBON MONOXIDE:	735	842	781	1204	890.50
OXYGEN:	11.3	11.4	11.4	11.4	11.38
COMBUSTIBLE GASES:	0.15	0.23	0.23	0.36	0.24
CARBON DIOXIDE:	5.5	5.4	5.4	5.4	5.43
EXCESS AIR:	104	107	106	106	105.75
COMBUSTION EFFICIENCY:	88.4	87.2	86.7	84.7	86.75
OXIDES of NITROGEN:	37	35	33	34	34.75
SULFUR DIOXIDE:	0	0	0	0	0.00

STATION HOUSING PEAKER SMALL

EXCS AIR105.8

FUEL 21900 BTU/LB

FUEL CONSTIT-UENT	PER FUEL UNIT LB	MOL WT DIV SOR	MOLS PER CONST-UENT	O2 MUL TPL	O2 REQ THEO	CO2	SO2	O2	N2	H2O	CO
C TO CO2	1136	12	94.70	1	94.7	94.7					
C TO CO	34	12	2.80	0.5	1.4						2.8
H2	387	2	193.50	0.5	96.8					193.5	
S	0	32		1	0.0		0.0				
O2	48	32	1.50	-1	-1.5						
N2	42	28	1.50						1.5		
CO2	48	44	1.10								
H2O	0	18								0.0	
ASH											
SUM	1695		295.10		191.4						
O2 REQ. THEORY					191.4						
O2 EXCESS					202.4			202.4			
O2 TOTAL					393.8						
N2 SUPPLIED					1480.7				1480.7		
AIR SUPPLIED DRY					1874.5						
H2O IN AIR					39.7					39.7	
AIR SUPPLIED DRY					1914.2						
						94.7	0.0	202.4	1482.2	233.2	2.8
DELTA T					285.00						
SPECIFIC HEATS						9.0	9.2	7.1	7.0	8.1	

	TOTAL
LOSS IN DRY GAS CO2	242905.50
LOSS IN DRY GAS SO2	0.00
LOSS IN DRY GAS O2	409654.14
LOSS IN DRY GAS N2	2956952.31
LOSS IN DRY GAS CO	327768.00
UNBURNED CO LOSS	
LOSS IN H2O IN AIR	91737.42
SENS HEAT H2O IN FUEL	446694.75
LATENT HEAT	3622320.00
TOTAL LOSSES	8098032.11
TOTAL ENERGY INPUT	37129260
PERCENT LOSSES	21.8103784
BOILER EFFICIENCY	78.19

HOUSING LARGE PEAKER COMBST.DATA					AVG
STACK TEMPERATURE:	30	27	30	22	27.3
AMBIENT TEMPERATURE:	27	27	28	28	27.5
CAREON MONOXIDE:	8	8	8	8	8.0
OXYGEN:	8.2	8.3	8.2	8.2	8.2
COMBUSTIBLE GASES:	0	0	0	0	0.0
CARBON DIOXIDE:	7.2	7.1	7.2	7.2	7.2
EXCESS AIR:	58	58	57	57	57.5
COMBUSTION EFFICIENCY:	92.1	92.7	92.4	98.8	94.0
OXIDES of NITROGEN:	69	69	68	67	68.3
SULFUR DIOXIDE:	15	15	15	15	15.0

STATION HOUSING PEAKER LARGE

EXCS AIR 57.5

FUEL 21900 BTU/LB

FUEL CONSTIT-UENT	PER FUEL UNIT LB	MOL WT DIV SOR	MOLS PER CONST-UENT	O2 MUL TPL	O2 REQ THEO	CO2	SO2	O2	N2	H2O	CO
C TO CO2	1140	12	95.00	1	95.0	95.0					
C TO CO	0	12		0.5	0.0						0.0
H2	387	2	193.50	0.5	96.8					193.5	
S	0	32		1	0.0		0.0				
O2	48	32	1.50	-1	-1.5						
N2	42	28	1.50						1.5		
CO2	48	44	1.10								
H20	0	18								0.0	
ASH											
SUM	1665		292.60		190.3						
O2 REQ. THEORY					190.3						
O2 EXCESS					109.4			109.4			
O2 TOTAL					299.6						
N2 SUPPLIED					1126.7				1126.7		
AIR SUPPLIED DRY					1426.3						
H2O IN AIR					30.2					30.2	
AIR SUPPLIED DRY					1456.5						
						95.0	0.0	109.4	1128.2	223.7	0.0
DELTA T					221.00						
SPECIFIC HEATS						9.0	9.2	7.1	7.0	8.1	

	TOTAL
LOSS IN DRY GAS CO2	188955.00
LOSS IN DRY GAS SO2	0.00
LOSS IN DRY GAS O2	171649.73
LOSS IN DRY GAS N2	1745264.29
LOSS IN DRY GAS CO	0.00
LOSS IN H2O IN AIR	54128.42
SENS HEAT H2O IN FUEL	346384.35
LATENT HEAT	3622320.00
TOTAL LOSSES	6128701.79
TOTAL ENERGY INPUT	36472260
PERCENT LOSSES	16.8037347
BOILER EFFICIENCY	83.20

Specification for In-Situ Oxygen Monitoring Equipment

Vendor shall provide in-situ zirconium oxygen monitoring equipment complete including probes, flanged probe protection tubes and microprocessor control units for the Ukraine Thermal Power Plant number 5. System shall be as specified below:

Oxygen Probes shall conform to the following:

Principle of operation:	Zirconium oxide electrochemical cell
Maximum temperature:	675 deg. C
Power requirements:	230 VAC
Insertion Length:	92 cm
Protection tube material:	330 RA Stainless Steel
Junction Box housing:	Nema 4
Accuracy:	+ or - 5 % of measured value
Mounting:	Flange

Microprocessor control shall conform to the following:

Span:	0.1 to 20% (minimum)
Control housing	Nema 4
Power requirements	230 VAC
Ambient Temperature:	-18 to 49 deg. C

Microprocessor control shall be capable of averaging multiple probe outputs for each unit together into single control output. Vendor shall provide transducer to convert control output to 0 to 5 mA.

Numbers of probes required per each unit are:

TEPS-5 I & II:	2
TEPS-5 III & IV:	3

Suggested Vendors:

Thermox Instrument Division of Ametek
Pittsburgh, PA 15238
(Local Rep. Ray Knitter Asc. Milwaukee)

WestingHouse Electric Corporation
Combustion Control Division
Orrville, Ohio 44667
(Local Rep. Combustion Systems, Waukesha)

Zircoa Inc.
Solon, Ohio 44139

APPENDIX C
Joseph Technology Trip Report

TRIP REPORT
KIEV, UKRAINE

DR. I. OLIKER, P.E.
JOSEPH TECHNOLOGY CORPORATION, INC.

APRIL 20-21, 1992

I. EXECUTIVE SUMMARY

The unprecedented transformation of the former Soviet Union and the emergence of the independent republics has created an atmosphere of ambivalence. This climate is characterized by uncertainty and fear on one hand, and opportunity on the other. The energy sector exemplifies these perceptions and presents the potential to significantly affect the outcome of this transformation.

The Republic of Ukraine is one of the several former soviet republics faced with energy challenges. Energy in these republics includes the centralized production of electricity and heat. This is accomplished through large district heating systems, which are incorporated in steam based cogeneration plants. The Kiev District Heating System was selected for a USAID sponsored energy audit, due to its magnitude and the potential impact of energy conservation measures. The objective of this energy audit was to identify potential projects where thermal energy conservation measures can be demonstrated, utilizing equipment manufactured by US vendors. The Cogeneration Power Plant No. 5, the Belichiya Hot Water Boiler Plant, the Kiev Theater of Opera and Ballet, and the administration building of the railroad system were visited and surveyed.

The survey revealed that although the generation part of the power plants are relatively advanced, such as in steam turbine technology, there are other areas, which are outdated and inefficient. These areas are addressed in the short-term and long term recommendations below:

Short-Term Recommendations:

- Supply thermostatic control valves, temperature control valves, and BTU meters for the Kiev Theater of Opera and Ballet heating system
- Supply a three-way temperature control valve with night setback and BTU meter for Railroad Administration Building's heating system.
- Supply three portable combustion analyzers for the district heating system peaking boiler, Power Plant No. 5, and the Belichiya Boiler Plant.

- Supply three flow meters to accurately measure oil (mazout) consumption, and one flow meter to accurately measure natural gas consumption at Power Plant No. 5.

- Supply an on-site oxygen-trim control system for the boilers in Power Plant No. 5.

Long-Term Recommendations:

- Provide power plants with state-of-the-art computerized control systems.

- Implement modern water chemistry control on district heating water.

- Install variable speed motors on district heating pumps.

- Install pollution monitor and control equipment in power plants.

- Develop devices for transmission/distribution piping leak detection.

- Replacement of existing piping network with more advanced and reliable piping technology.

- Install efficient heat exchangers to isolate users from the district heating system.

- Provide power plants with telemetry feedback capability.

- Examine the use of low grade coal as an energy source in fluidized bed applications.

- Develop combined cycle cogeneration plants.

These recommendations are derived from the survey results and address areas which present an opportunity for energy conservation. The short term recommendations include immediate actions which will improve the efficiency of the existing systems in the surveyed sites. The long term recommendations are more general in nature and apply to most power plants and sites.

The organization and management of the typical district heating plants may be characterized as overstaffed and bureaucratic. The Kiev Electric Utility and District Heating Organization falls under the Ministry of Power and Electrification. The district heating organization is responsible for the transmission of the hot water to the substations. In certain instances, this organization is responsible for some distribution lines and peaking boilers. The responsibility for the secondary distribution lines, the remaining peaking boilers, and the building systems is assumed by an independent entity known as the city or communal district heating organization. The merger of the two organizations is recommended in order to produce a "district heating company", responsible for the purchase of heat and supply to users, along with metering and billing, and the maintenance and construction of the district heating system. The resulting

110

independent entities with distinct responsibilities, utility for power and heat generation, and "district heating company" for heat transmission and distribution, will assist in the effort of privatization.

The existing energy tariffs exhibit a significant disparity among the various user types. The tariffs were centrally established and are very low for residential users, average for commercial users and high of industrial users. The existing energy rates have increased dramatically with the rising fuel prices, yet compared with the current world rates are still low. The development of a new tariff structure that gradually increases the energy rates to the same level as the rest of the world, and introduces demand and energy charges is recommended to address this disparity. The implementation of such rate structure should be gradual and cognizant of the inability of individuals to meet their current living expenses.

Additional government actions are not necessary at this juncture, aside from encouraging privatization, which is the apparent long term solution. The government should facilitate the development of industries which manufacture energy conservation equipment, such as, monitor and control devices.

U.S. assistance could be in the form of active promotion of joint ventures of U.S. companies with local industries in order to develop the manufacturing base. The U.S. Government can also provide financing and/or security for private investments, and sponsor technology transfer and engineering services programs.

II. PROJECT DESCRIPTION AND BACKGROUND

This project was funded by the USAID Emergency Energy Assistance Program and is part of an Industrial Energy Audit performed for the republics of the former Soviet Union. The objective of this project was to conduct an in-depth energy audit of a district heating system in Ukraine and identify thermal energy conservation measures which can be addressed and demonstrated using equipment manufactured in the United States.
In the Ukraine, as with other former Soviet Union Republics, a substantial amount of power output from fossil plants is produced by cogeneration. Cogeneration can account for 30% of the total output, compared with Germany were the cogenerated rate is 10% and the U.S. with a 5% power output attributed to cogeneration. District heating systems are based on steam power plants, some of which are equipped with large, 250 MW, supercritical cogeneration steam turbines. The systems are generally characterized by very efficient generation and very inefficient distribution and utilization of thermal energy. The objective of this project was to identify and focus on areas were the application of western technology would produce a substantial amount of short term energy savings.

The district heating system serving the City of Kiev was selected for this audit considering its magnitude and the potential impact that may be derived from energy conservation. Specifically, the Cogeneration Plant No. 5, the Belichiya Hot Water Boiler Plant, the Kiev

Theater of Opera and Ballet, and administration building of the railroad system were visited and surveyed. Specific technical and organizational findings are discussed in subsequent sections and are coupled with applicable short term and long term recommendations.

The organization of the district heating system in Kiev is bureaucratic and overstaffed. Radical changes are required in organization and managment structure, and work ethics as a prerequisite to privatization. The development of an updated and equitable rate structure for energy is essential. The transition to this new rate structure should be sensitive to the ability of individuals to meet their living expenses, considering the exponential growth of fuel prices which will ultimately be carried to the consumer.

III. TECHNICAL

This section presents the results of the site visits in Kiev, Ukraine and addresses specific problems, pertinent to the project's objective with short term and long term recommendations.

Overall Technical Description and Findings:

The Kiev District Heating System consists of Cogeneration Plants No. 4, No. 5, No. 6, and nine hot water boiler plants which are interconnected (except the Belichiya Boiler Plant) with one transmission and distribution network. The cogeneration plants operate year round and in some operating modes, water is pumped for distances up to 28 kilometers.

Cogeneration Plant No. 5 was surveyed on April 20, 1992. The plant is equipped with 2x250 MW and 2x100 MW district heating turbines, and three hot water peaking boilers with a total capacity of 180 Gcal/hr. The district water is initially heated up to 110°C in the turbine heat exchangers and further heated to 130°C in the peaking boilers. A comprehensive description of this plant is available in the Auditor's report.

A significant problem in the district heating system involves the high return water temperature from the users. The higher the deviation of the return temperature from design the greater the system inefficiency, coupled with a substantial reduction in electrical output from the cogeneration units. The reduction in temperature of return water through improved utilization of heat is a significant factor in energy conservation. This reduction in the temperature of return water may be achieved by proportionally reducing the district hot water flow rate. Flow rate optimization may be accomplished by accurately controlling the water flow through the space heating systems or terminal heating units. The review process focused on identifying users where flow reduction and control measures may be implemented, producing immediate results.

112

Cogeneration Plant No. 5

Specific problems at Cogeneration Plant No. 5 in Kiev, Ukraine, include:

- Inaccurate measurement of fuel (gas and oil) supply precludes proper monitoring. An accurate gas flow meter will assist them in properly monitoring consumption, which is essential in energy conservation.

- The use of once-through cooling in the plant has introduced zebra mussel contamination in the condensers, with a subsequent reduction in electrical output. The increasing levels of contamination indicate the importance of promptly addressing this problem.

- There is a lack of quality resins for the condensate polishing system. The supply of resins from the former East Germany has been replaced with unreliable supply sources.

- The inaccurate controls result in the inefficient combustion of fuel. A portable combustion analyzer can greatly enhance combustion efficiency.

- Air preheaters are subject to intensive sulfur corrosion when firing oil. Particle deposits are also prevalent in the air preheating heat exchangers.

- Problems with turbine blade erosion in the condensation zone.

- The lack of pressure control in the large transmission piping is a significant concern. The plant supplies 25,000 m^3/hr of water during the winter and about 13,000 m^3/hr during the summer, with an approximate pressure of 21 atm.

- Severe erosion problems are present in the feedwater control system for boiler no. 1. A recent rapture of a control valve resulted in the death of four people.

- There is a lack of NO_x monitoring equipment. In an effort to reduce some of the NO_x emissions, a stage combustion system was installed in the plant.

Belichiya Boiler Plant

The Belichiya Boiler plant was surveyed on April 21, 1992. This is a satellite boiler plant, constructed 3 years ago at a cost of 12,000,000 rubles, to supply a relatively new region with district heating. The boiler plant is equipped with 3x100 Gcal/hr hot water boilers and 2x25 tons/hr steam generators. Currently, the plant output is only 60 Gcal/hr, and during our visit the plant output was about 30 Gcal/hr. A make-up water treatment system is used to soften water and provide vacuum degasification. The major fuel is natural gas, while the back-up is oil.

13

The boiler efficiency is 91-92% at the lower heating value of fuel. Computerized equipment were not available for the plant, yet they are planned for installation in 1993. The maximum flue gas temperature is 170°C for gas and 200°C for oil. The boilers do not have a preheater. During our visit we managed to obtain carry out flue gas measurements and obtained the following results:

O_2 = 6.4%
NO_x = 80 mg/m^3
CO = 0
SO_2 = 4-8 mg/m^3

The most significant problems in this plant are the lack of accurate combustion control equipment, and the lack of NO_x monitoring equipment.

Transmission & Distribution System

The most significant problem with the transmission and distribution piping is external corrosion. Other problems include leaks (excluding corrosion leaks) and heat loss from poor insulation.

End Users

The end users of district heating are usually directly connected to the system, with district water running through the terminal units. Heat exchanger substation have been developed in newer districts to provide points of isolation. During the past five years the maximum supply temperature of district water has been reduced from 150°C to 130°C in most systems, including the subject system.

The majority of problems facing end users arise from poor controls. Specifically, these problems include:

- Poor control of heat supplied to the end users. Presently, the heat supply is controlled by varying the district water supply temperature as a function of outdoor temperature.
- In direct systems, the control of supply temperature inside the user's facility is achieved by mixing the district supply water with the building return water using an injector.
- There is no temperature control available for space heating.
- Most users do not have metering of their heat consumption.

114

Short-Term Recommendations:

- Supply *thermostatic control valves, temperature control valves*, and *BTU meters* for the Kiev Theater of Opera and Ballet heating system
- Supply a *three-way temperature control valve* with night setback and *BTU meter* for Railroad Administration Building's heating system.
- Supply *three portable combustion analyzers* for the district heating system peaking boiler, Power Plant No. 5, and the Belichiya Boiler Plant.
- Supply *three flow meters* to accurately measure oil (mazout) consumption, and *one flow meter* to accurately measure natural gas consumption at Power Plant No. 5.
- Supply an on-site *oxygen-trim control system* for the boilers in Power Plant No. 5.

Long-Term Recommendations:

- Provide power plants with state-of-the-art computerized control systems.
- Implement modern water chemistry control on district heating water.
- Install variable speed motors on district heating pumps.
- Install pollution monitor and control equipment in power plants.
- Develop devices for transmission/distribution piping leak detection.
- Replacement of existing piping network with more advanced and reliable piping technology.
- Install efficient heat exchangers to isolate users from the district heating system.
- Provide power plants with telemetry feedback capability.
- Examine the use of low grade coal as an energy source in fluidized bed applications.
- Promote and develop combined cycle cogeneration plants.

115

IV. ORGANIZATIONAL

This section addresses the organizational issues that were identified during the site visits in Kiev, Ukraine, describes specific problems pertinent to the project's objective, and offers recommendations. In addition, tariff and pricing issues are discussed, indicating areas of concern and providing recommended plans of action.

Overall Organizational Description and Findings:

The Kiev Electric Utility and District Heating Organization are under the Ministry of Power and Electrification. The district heating organization, part of the electric utility, is responsible for the transmission of the hot water to the various substations. In certain instances, this organization is responsible for some distribution lines and peaking boilers. The responsibility for the secondary distribution lines, the remaining peaking boilers, and the building systems is assumed by an independent entity known as the city or communal district heating organization. The organization and management of these district heating entities is bureaucratic and overstaffed. There is considerable redundancy between the utility district heating organization and the communal district heating organization.

Sort Term Recommendations:

The merger of the two organizations is recommended in order to produce a "district heating company", responsible for the purchase of heat and the supply to users, along with the metering and billing, and the maintenance and construction of the district heating system. The resulting independent entities with distinct responsibilities, the utility for power and heat generation, and the "district heating company" for heat transmission and distribution, will assist in the effort of privatization. The privatization of buildings will require the owners to maintain their heating systems and to develop a sense of energy conservation.

Long Term Recommendations:

Additional government actions are not necessary at this juncture, aside from encouraging privatization, which is the apparent long term solution. The government should facilitate the development of industries which manufacture energy conservation equipment, such as, monitor and control equipment.

U.S. assistance could be in the form of active promotion of joint ventures of U.S. companies with local industries in order to develop the manufacturing base. The U.S. Government can also provide financing and/or security for private investments, and sponsor technology transfer and engineering services programs.

V. PRICING AND TARIFF ISSUES

Meetings and discussions with the Manager of Fuel Supply from the Ukraine Ministry of Power and Electrification, Mr. Nasedkin, revealed that the fuel consumption in Ukraine is about 75 million tons of equivalent fuel. The equivalent fuel consists of 50% natural gas, supplied from other republics, namely Russia and Turkmenistan, 17% crude oil, and 33% coal. The government is under pressure by the coal miners to increase the prices of coal. In 1991 the average price of coal ranged from 27-35 rubles per ton, while in the first quarter of 1992 the average prices soared to 2,500 rubles per ton. The price for oil also increased sharply while its production dropped. The Republic of Russia has allocated quotes for oil supply to Ukraine. During 1991, Ukraine's quote was 55 million tons, whereas in 1992 the quote is reduced to 40 million tons. Currently, 40% of the oil is sold in the free market, while 60% is sold at fixed rates; oil shortages were apparent during the first quarter of 1992. During the first quarter of 1991, the average price of oil was approximately 70 rubles per ton, compared to the 2,000 rubles per ton during the first quarter of 1992. It should be noted that oil accounts for 70% of the cost of electricity.

Traditionally, GASPROM was responsible for the supply and transportation of natural gas to the West. Last year Turkmenistan severed its ties with GASPROM and sells natural gas independently. Ukraine received 30% of its total gas supply from Turkmenistan through GASPROM at a rate of 330 rubles per 1,000 cubic meters of gas. Turkmenistan currently increased its rate to 2,000 rubles per 1,000 cubic meters, forcing the Ukraine to halt their gas purchase until an agreement in price is reached. It is expected the price of natural gas will remain around the same level, 1,800-2,000 rubles per 1,000 cubic meters, even after the negotiations.

Table 1 presents the electric and thermal tariffs for the various load groups in Ukraine during 1990. The energy tariffs are increasing frequently, driven by the soaring fuel prices which must be carried to the consumer. The disparity between tariffs for industry and the general public is growing due to the reluctance to raise the tariffs for the general public, which is living in a state of depression, and the belief that industry can better cope with the higher rates.

The existing energy tariffs exhibit a significant disparity among the various user types. The tariffs were centrally established and are very low for residential users, average for commercial users and high of industrial users. The current cost of electricity is about 1.3 rubles per kwh, with residential users charged 0.5 rubles per kwh, farmers charged 0.25 rubles per kwh, and industrial users paying the highest rate. The existing energy rates have increased dramatically with the rising fuel prices, yet compared with the current world rates are still low. The development of a new tariff structure that gradually increases the energy rates to the same level as the rest of the world, and introduces demand and energy charges is recommended to address this disparity. The implementation of such rate structure should be gradual and cognizant of the inability of individuals to meet their current living expenses.

117

Despite the dramatic increases in fuel prices, they are still considerably lower than the current world prices. The price of natural gas which increased from 330 rubles/1000m^3 in 1991 to 2,000 rubles/1000 m^3 this year is only 15% of the current world price. Coal is about 28% of the current world price, while oil is 14%. The tariffs for thermal energy also exhibited large increases, yet they are still beloww the world rates. The industrial rate for heating during 1992 increased to 2,057.4 rubles/Gcal from 19.9 rubles/Gcal in 1991. The commercial rate for heating during 1992 increased to 907.6 rubles/Gcal from 15.5 rubles/Gcal in 1991. The residential rate for heating during 1992 increased to 42 rubles/Gcal from 12.8 rubles/Gcal in 1991. The current world rate for all three categories is about 3,125 rubles/Gcal.

Table 1
Tariffs for Industrial Power and Heat
Ukrainian Power Ministry

INDUSTRIAL POWER TARIFF - 1990

Load Groups	kop/kWh
1. Industrial Loads (750 kVA and higher)	1.90
2. Non-Industrial	3.07
3. Electrified Railroad Transport	1.81
4. Urban Transport	1.80
5. Trade and Catering Establishments	2.09
6. Agriculture	0.99
7. Lighting	3.06
8. Resellers	2.07
9. Transfer of Power to USSR Central Power Network	1.73
AVERAGE:	2.05

INDUSTRIAL THERMAL TARIFF - 1990

Load Groups	rbl/Gcal
1. Industry	11.24
2. Public Services - Total	9.99
2a. Bath Houses, Laundries, Showers	4.11
3. Residential Heating Total	4.17
3a. Residential-Economically Independent	2.29
3b. Greenhouses and Hotbeds	2.27
4. Wholesale Loads, Resellers	3.96
5. Other Loads	11.88
AVERAGE:	8.13

118

APPENDIX D
List of Abbreviations

AC	= alternating current
amps	= amperes
atm	= atmosphere = 14.696 pounds per square inch
bar	= 100,000 pascals = 14.504 pounds per square inch
BTU	= British thermal unit
cfm	= cubic feet per minute
cm	= centimeter = 0.3937 inches
cm^2	= square centimeter = 0.155 square inches
CO	= carbon monoxide
CO_2	= carbon dioxide
DC	= direct current
°C	= degree CelsiusT[°C] = 5/9*(T[°F] - 32)
°F	= degree Fahrenheit
°R	= degrees RankineT[°R] = T[°F] + 460
ECO	= Energy Conservation Opportunity
eff	= efficiency
ex air	= excess air
ft^2	= square feet
ft^3	= cubic feet
Gcal	= gigacalorie = 1 billion calories = 3.968 million BTU
GJ	= gigajoules = 1 billion joules
gph	= U.S. gallons per hour
gpm	= U.S. gallons per minute
GWh	= gigawatt hours = 1 billion watt hours
H_2	= hydrogen
H_2O	= water
H_2SO_4	= sulfuric acid
hectare	= 10,000 square meters = 2.471 acres
hectoliter	= 100 liters = 26.42 U.S. gallons
Hg	= mercury
hr	= hour
Hz	= hertz = cycles per second
J	= joules
kcal	= kilocalories = 1 thousand calories = 3.968 BTU
kg	= kilogram = 2.2046 pounds
Kg_f	= kilogram
Kgcc	= 7,000 kcal = 27,776 BTU
kJ	= kilojoules = 1 thousand joules = 0.947813 BTU
km	= kilometer = 0.621 miles
kN	= kilonewton = 1 thousand newtons
kp	= kopeck = 1/100 ruble
kPa	= kilo pascals = 1 thousand pascals = 0.14504 pounds per square inch
kV	= kilovolts = 1 thousand volts
kVA	= kilovolt-amperes
kVAr	= kilovars = 1 thousand volt-amperes (reactive)
kW	= kilowatt = 1 thousand watts
kWh	= kilowatt hour = 1 thousand watt hours
lbs	= pounds

liter	= 0.2642 U.S. gallons = 0.03531 cubic feet
m	= meter = 39.37 inches
m^2	= square meter = 10.76 square feet
m^3	= cubic meter = 35.31 cubic feet
mA	= milliampere = 0.001 amperes
MCal	= megacalorie = 1 million calories
metric ton	= 1 thousand kilograms = 1.1023 U.S. tons
mg	= milligrams
min	= minute
MJ	= megajoules
MM	= million
mm	= millimeter = 0.03937 inches
MPa	= 1 million pascals = 145.04 pounds per square inch
MVA	= megavolt-amperes
MW	= megawatt = 1 million watts
MWh	= megawatt hours = 1 million watt hours
NG	= natural gas
nm	= nanometer
Nm^3	= cubic meters at standard conditions of temperature and pressure (20°C and 1 atmosphere)
NO_X	= nitrogen oxide
O_2	= oxygen
P	= pressure
PC	= personal computer
ppm	= parts per million
psi	= pounds per square inch
psig	= pounds per square inch (gauge)
R	= ruble
s	= second
SO_2	= sulfur dioxide
sq ft	= square feet
Tcal	= teracalorie = 1 trillion calories = 3.968 billion BTU
T	= temperature
TPS	= Thermal Power Station
V	= volts
VA	= volt-amps
VArs	= volt-amps (reactive)
VSD	= variable speed drive
yr	= year

APPENDIX E
Photographs

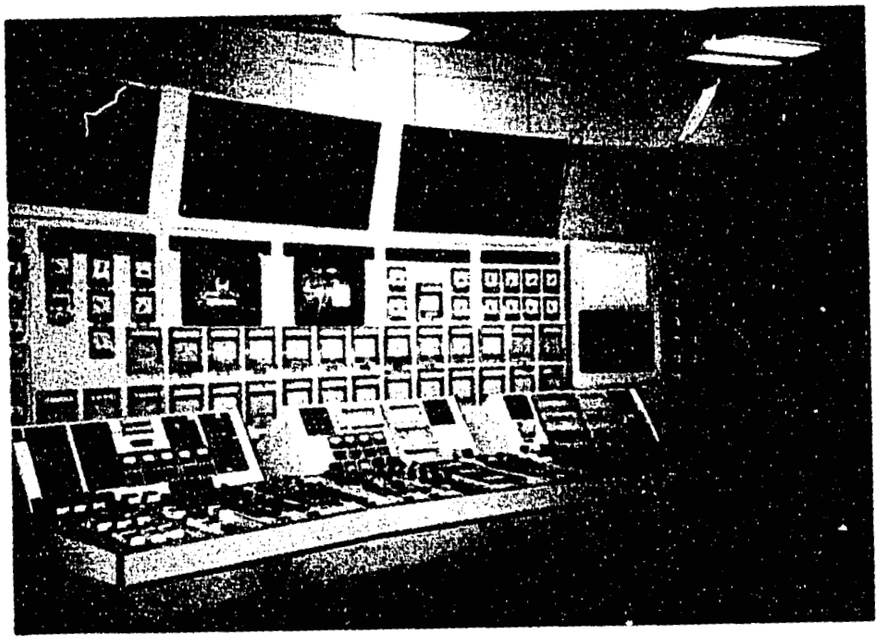

One of two main control rooms at Power Plant #5, Kiev.

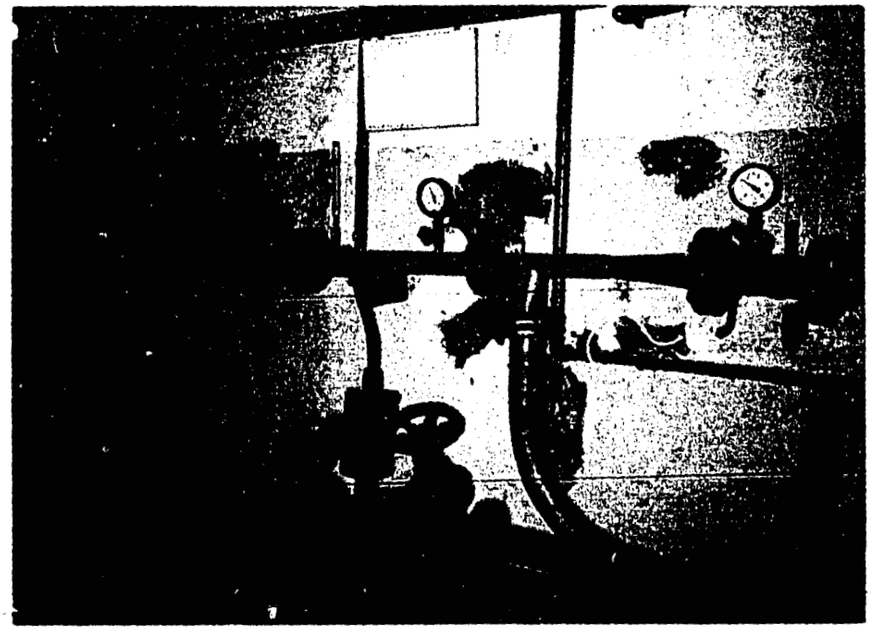

Hot water heating piping for the railway administrative office building. (Photo shows supply water piping and return water piping blending at the building infector.)

PHOTOGRAPHS

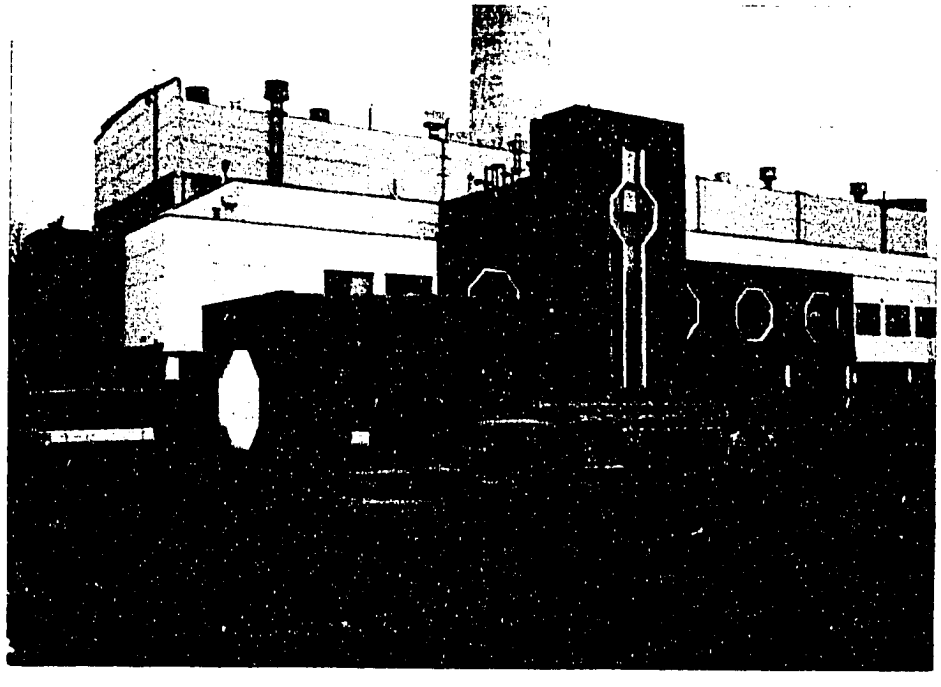

Belichi Peaking Power Plant on the western edge of Kiev.

700 MW generater at Power Plant #5, Kiev.