PN ABX-633

C9-098

# FINAL REPORT

Covering Period : October 1, 1990 to Sept. 30, 1995

Submitted to the Office of the Science Advisor
U.S. Agency for International Development

# ENGINE DRIVEN POTATO DIGGER WITH OSCILLATING BLADE FOR SMALL FARM USE


Principal Investigator: PROF. CHANDRA P. GUPTA
Asian Institute of Technology
Bangkok, Thailand

Collaborator: PROF. DAN WOLF
Technion-Israel Institute of Technology
Haifa, Israel



Project Number: C9-098
Grant Number: 493-5544-G-SS-0146-00

A.I.D. Grant Project Officer: MR. DENNY F. ROBERTSON

Project Duration: October 1, 1990 - September 30, 1995



REC'D IN R&D/R

JAN 0 4 1996

CC:BOSTID

# FINAL REPORT

Covering Period : October 1, 1990 to Sept. 30, 1995

Submitted to the Office of the Science Advisor
U.S. Agency for International Development

# ENGINE DRIVEN POTATO DIGGER WITH OSCILLATING BLADE FOR SMALL FARM USE

Principal Investigator: PROF. CHANDRA P. GUPTA
Asian Institute of Technology
Bangkok, Thailand

Collaborator: PROF. DAN WOLF
Technion-Israel Institute of Technology
Haifa, Israel

Project Number: C9-098
Grant Number: 493-5544-G-SS-0146-00

A.I.D. Grant Project Officer: MR. DENNY F. ROBERTSON

Project Duration: October 1, 1990 - September 30, 1995

## TABLE OF CONTENTS


| Section | Description | Page |
|---|---|---|
| 1. | COVER SHEET | 1 |
| 2. | TABLE OF CONTENTS | 2 |
| 3. | EXECUTIVE SUMMARY | 3 |
| 4. | RESEARCH OBJECTIVES | 3 |
| | 4.1 Rationale | 3 |
| | 4.2 Innovative Aspect | 4 |
| | 4.3 Objective of the Project | 5 |
| 5. | METHODS AND RESULTS | 5 |
| 6. | IMPACT, RELEVANCE AND TECHNOLOGY TRANSFER | 22 |
| 7. | PROJECT ACTIVITIES/OUTPUTS | 23 |
| 8. | PROJECT PRODUCTIVITY | 24 |
| 9. | FUTURE WORK | 24 |
| 10. | LITERATURE CITED | 25 |

## 3. EXECUTIVE SUMMARY

The project aims to develop an engine driven potato digger with oscillating perforated disk type blade together with a soil clod separator with a view to reduce draft requirement, minimize tuber damage, lower the cost (within the economic reach of LDC farmers), reduce human drudgery and labor requirement and ensure safety of farm workers.

The single row potato digger machine is a walking type unit developed for small farms. It is powered by a two wheel, single axle 8.6 kW tractor. The power to the 600 mm diameter, spring-oscillated disk rotating at 60-160 rpm is transmitted from gear box of the tractor through a pair of 45 degree bevel gears and a sprocket-chain drive. The harvesting efficiency of the machine was observed to be 100% with tuber exposure percentage of 88%, field efficiency of 95-96% and field capacity of 0.19 ha/h. The tuber damage at all forward speed was less than 1%. The machine performed satisfactorily on a sustained basis.

Another double row potato digger with two perforated oscillating disks and two soil clod separators, driven by the pto shaft of a medium horsepower (30-35 kW) 4-wheel tractor was successfully developed for medium and large size farms. Its transmission has a differential gear system to overcome the problem of differential loading of two rotating disks. The field capacity of the machine at 0.69 m/s was 0.32 ha/h and the total power requirement was 15.6 kW. The optimum harvesting efficiency, exposure percentage and damage were 100%, 77% and 0% respectively. This machine also performed satisfactorily on a sustained basis.

Both single and double row machines are provided with optional attachment of potato elevating conveyor and collection boxes to overcome the drudgery involved in picking the tubers from the broken ridges in bent posture or squatting position. The project fully achieved its objectives set forth in the project document. It is anticipated that both single and double row machines will be very useful for potato farmers having small, medium or large size land holdings in LDCs.

As a result of the project, project personnel were trained in the development of agricultural machines.

## 4. RESEARCH OBJECTIVES

### 4.1 Rationale

Majority of farmers in developing countries harvest potato crop by digging with a spade and hand picking the potatoes from the broken ridges on the field. This is a highly labor intensive and time consuming operation. It has been estimated that 600-700 man-hr/ha are required for manual digging (Verma and Garg, 1971). Moreover, the percentage of damaged potatoes due to cutting action of spade is sometimes significant, which reduces the storability of

the product due to development of rot and moisture loss, leading to reduction in economic returns to the farmers. Sometimes, due to shortage of labor, during peak harvest season, the harvesting of the crop is delayed resulting in loss of crop due to unfavorable weather conditions.

Tractor drawn potato diggers used on mechanized farms in developing countries have high draft requirement, produce poor soil-break up, resulting in need of rod-chain conveyor to sift the soil clods from tubers. The potatoes get exposed to moving steel rods of chain conveyor resulting in bruising of the tubers. Moreover, farmers having small and medium size land holdings can not afford to buy it due to its high initial cost. Therefore a need was felt for developing a potato digger, which has low draft requirement and can be operated by a small to medium horse power tractor commonly owned by the farmers of developing countries.

## 4.2 Innovative Aspects

1. The oscillating blade (disk share) requires less draft and results in improved soil break up and less soil compaction (Gupta and Rajput, 1982). The disk share was designed to oscillate in the direction of disk axis.

2. A driven share encounters considerably lower soil resistance than a passive share (Hyde, 1986).

3. Perforations in the rotary disk aid in sifting the soil clods from potato tubers with no increase in tuber damage (Hyde, 1986).

4. The coating of rubber on the surface of perforated powered disk share reduces the damage to potato tubers from exposure to metallic parts (Gagulina et al., 1983).

5. Less damage is suffered by potatoes when vibratory sieve is made of hollow web rods in comparison with solid rods (Hutchinson et al., 1988).

6. Adequate effective area of the sieve surface improved the efficiency of the soil clod separation. The drop height on delivery section of potato harvester was limited to within $400 \pm 100$ mm to reduce potato damage.

7. The windrowing of harvested potatoes to warm-up 1 to 3 hours reduces the tuber damage and improves toughness, (Betram, 1988).

8. The removal of haulm prior to harvest reduces the risk of bacterial infection, rhizoctonia in particular, helps in hardening the tuber skin and makes the flesh resilient.

The above mentioned well established scientific principles formed the basis of new design.

## 4.3 Objectives of the Project

The project aims at developing an oscillating perforated disk share type digger with a separator for harvesting potatoes with a view to:

1. reduce draft requirement;
2. minimize tuber damage;
3. lower the cost (within the economic reach of LDC farmers);
4. reduce human drudgery and labor requirement, and
5. ensure safety of the farm workers.

# 5. METHODS AND RESULTS

## 5.1 Design Considerations

The following were the main considerations in the design of potato digger:

1. The design should lead to the development of a machine with minimum tuber damage, low in cost as well as power requirement. The total power requirement of the machine should not exceed the power available from the tractor normally used on farms in LDCs.

2. The machine should improve the efficiency of working with adequate safety and reduce drudgery out of farm work of millions of farmers in LDCs.

3. The machine should be able to work in light, medium and heavy soils to have high potential for effective utilization under LDC conditions worldwide.

4. The potato digger should be able to operate upto a depth of 20 cm, which is normally the depth of root zone of tubers.

5. The size of perforations on the digging disk should be less than the minimum size of tubers to be harvested.

6. The surface of the disk should be smooth to eliminate any bruising of the tubers.

7. The direction of rotation of the disk should be such as to throw the dug tubers away from the wheels to avoid crushing of tubers by wheels.

## 5.2 Description of Developed Machines

### 5.2.1 Engine Driven One Row Potato - Digger with Oscillating Disk

One-row self-propelled single-axle walk-behind harvester works on the principle of shear cutting of soil by the rotating disk-share. As the machine moves forward along the row, the potato-soil mass is lifted by the disk share and thrown over a rotating separator, which exposes the potatoes over the soil. The potatoes can be either collected just after or be left in the field for warming up for later collection. The potato digger (Fig. 1) consists of the following major components:

1. A perforated disk with a diameter of 60 cm and concavity 7 cm works as the digging share. The size of perforations is 3.2 cm x 3.2 cm. These perforations were selected considering that the length, width and thickness of oblong shaped potatoes was observed to be 5.8-10.6 cm, 4.2-6.3 cm and 3.6-4.9 cm, respectively. The disk is coated in the central region with a circular rubber piece of 18 cm diameter and 4 mm thickness to avoid injury to tubers.

2. The disk is mounted on four springs to provide oscillations during its operation.

3. An 8.6 kW (11.5 hp), 1800 rpm diesel engine of two wheel tractor powers the digging disk and separator.

4. Power transmission system: The power is transmitted from the crankshaft of the engine to a built-in-gear box of the tractor through a double v-belt drive. At the outlet end of the built-in-gear box, there is a splined shaft. The speed of splined shaft is approximately 320 rpm at 90% throttle. The splined shaft is coupled to a pair of bevel gears and pinion with their axes inclined to each other at 45° angle. The reduction ratio is 1:2. The pair of bevel gear and pinion is enclosed in a gear box filled with SAE 40 oil. The power from the gear box is transmitted to the perforated disk through sprocket and chain drive with a speed reduction of 3:8 to provide a disc speed of 60 rpm at 90% throttle. The sprocket and chain drive permits easy changes in speed of the disk and separator.

5. Separator (Fig. 2) was made by welding 20 mm diameter hollow rods to a 150 mm diameter hub. The rods were arranged in a logarithmic spiral configuration to form a circular sieve with a maximum clearance of 35 mm between the ends, so as not to lose potatoes above 35 mm. The separator is driven at about 1.2 times the speed of disc with the help of a gear box and chain-sprocket drive.

6. A rear furrow wheel is provided to balance the side force exerted on the perforated disk with disk angle 45° and tilt angle 15°.

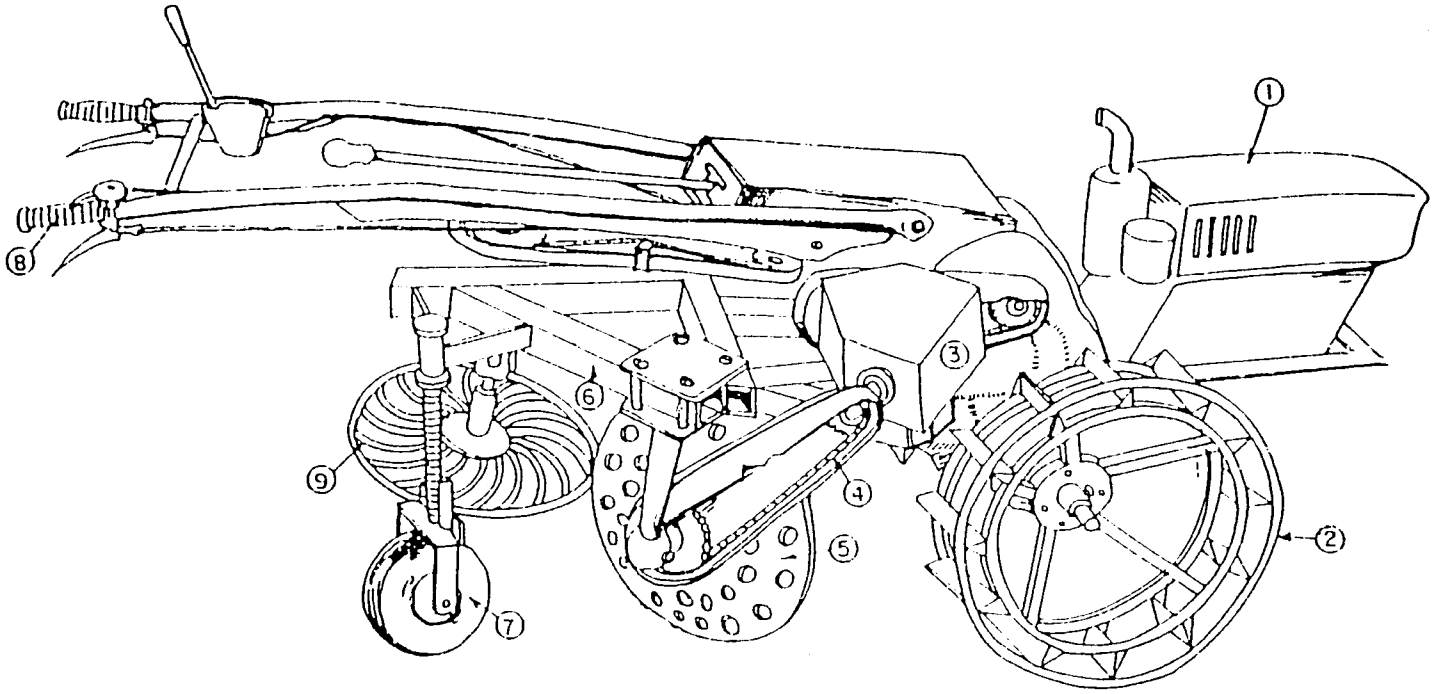


Legends:

| | | |
|---|---|---|
| 1. Engine | 2. Lugged wheel | 3. Gear box with 45° bevel gears |
| 4. Chain-sprocket drive | 5. Perforated disc | 6. Frame |
| 7. Gauge wheel | 8. Handle | 9. Potato soil-clod separator |

Fig. 1: Two wheel tractor driven vibratory powered disc potato digger cum soil-clod separator

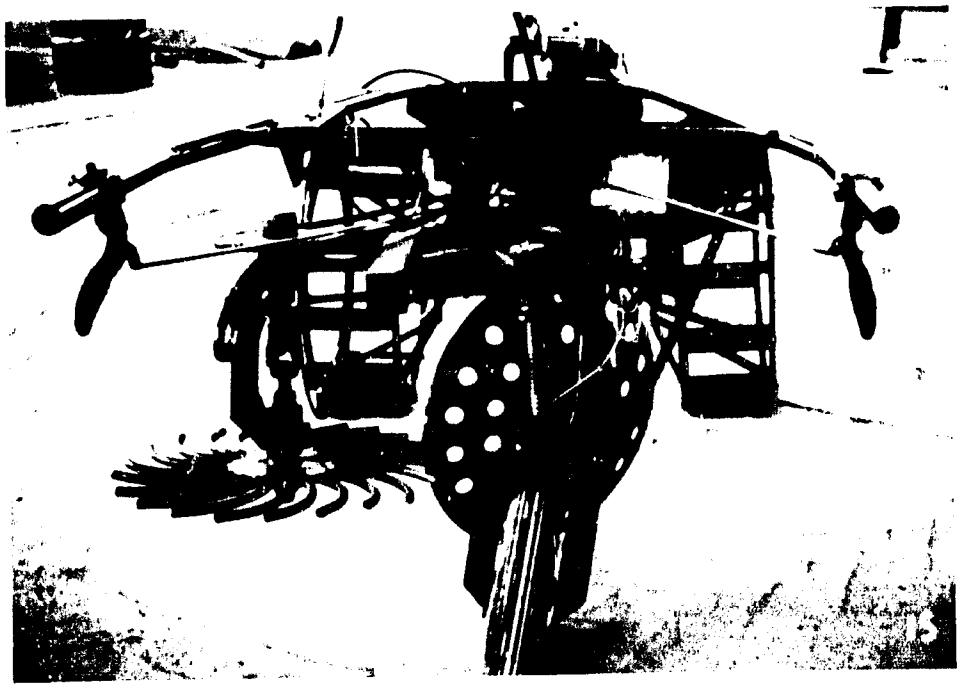

Fig. 2 Rear view of two wheel tractor driven potato digger cum soil clod separator

### 5.2.2 P.T.O. Driven Tractor Mounted Two Row Potato Digger with Oscillating Disk

For farmers of developing countries who own a 4-wheel tractor, a p.t.o. driven tractor mounted potato digger with two rotating perforated discs was developed. It mainly consists of an A-shaped frame, power transmission system, perforated disc share for digging potatoes and two spinning disc separators (Fig. 3).

The p.t.o. of the tractor transmits rotary power to 71 cm diameter perforated disk blades through a telescopic drive shaft, planetary gear system having a speed reduction of 7:1 and a differential mechanism. The main advantage of differential system is that uneven loading of disks due to variation in depth, soil type and soil moisture, can be countered by change in the disc speed. When one of the disks slows down due to heavier soil resistance, the other disc can continue to move faster. The discs having a disk angle of 45° and tilt angle of 15°, were rotated at a nominal speed of 60 r.p.m.

The upper end of the main gear box provided power to the rotary sieve separator through a chain sprocket mechanism, which was designed with a speed reduction of 1.15. The separator was made by welding 20 mm outer diameter hollow rods to a 150 mm diameter hub. The rods were arranged in a logarithmic spiral configuration to form a circular sieve with a maximum clearance of 35 mm between the ends, so as not to lose potatoes above 35 mm.

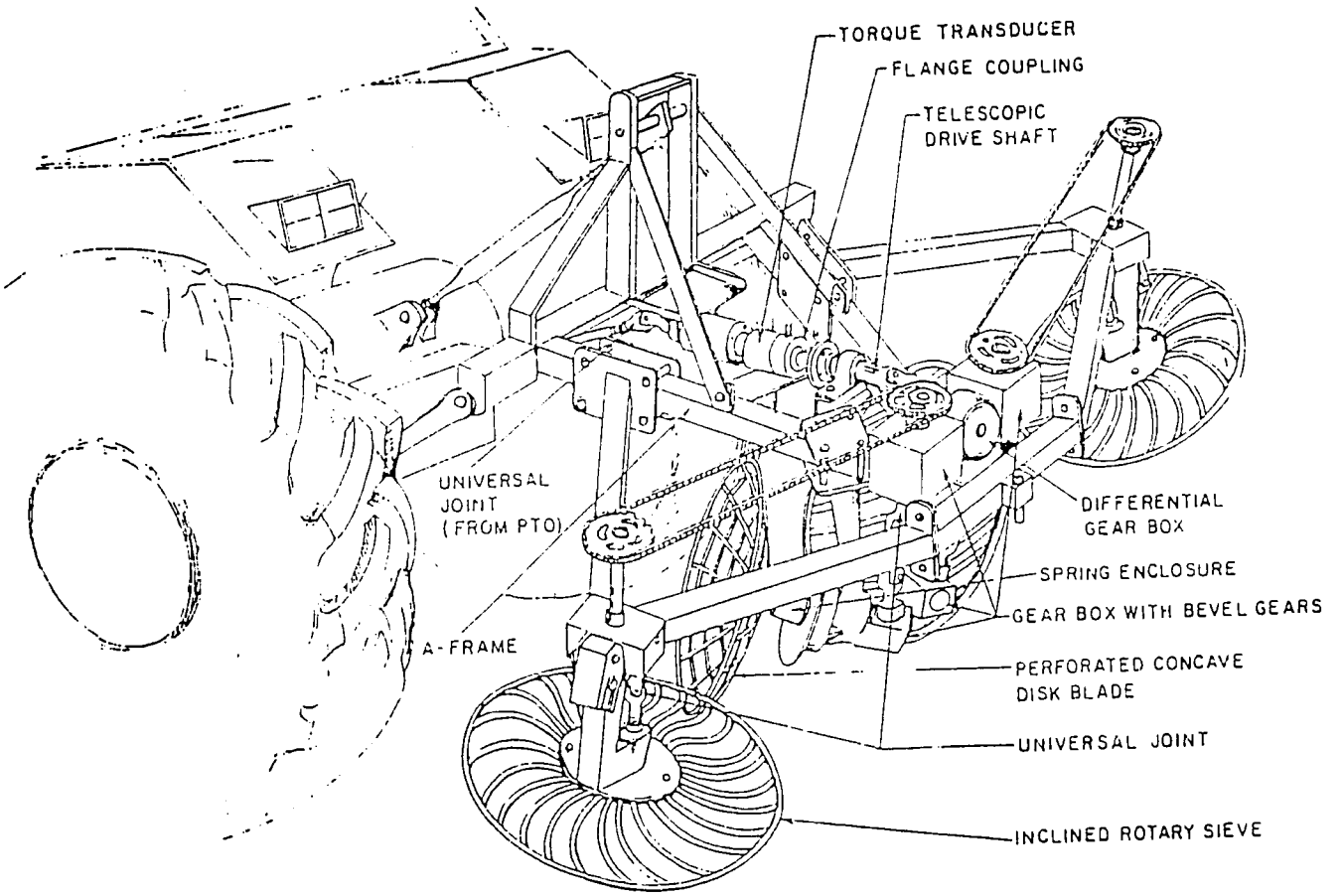


FIG. 3 TWO ROW OSCILLATING ROTARY DISC POTATO DIGGER SEPARATOR

## 5.3 Testing of the Machines

### 5.3.1 Experimental Site and Field Conditions

Both single row and two-row machines were tested in Fang, Chiang Mai district of north Thailand. The potatoes in this area are grown both in two rows and single row per bed. Figures 4, 5 and 6 show the views of field testing of the two potato diggers. The testing was carried out on single row per bed system. Under this system the top and bottom width of bed were 25 and 45 cm respectively with the average bed height of 20 cm. The bed to bed distance was 75 cm. The plant to plant spacing on the bed was 30 cm.

### 5.3.2 Data Collection and Field Testing

At various disk or separator speeds, data on average draft and average torque were recorded by a data logger using precalibrated load cell, torque pick up and strain amplifier. Data on various time losses were taken by a stop watch. The average forward speed of travel was measured by measuring the average time taken to cover a fixed distance. The percentage of potatoes left undug per meter length of ridge was noted to calculate the harvesting efficiency of the potato harvester. For damage percentage, the tubers which suffered skin injury, bruise or cut were weighed separately to estimate the percentage of tubers with different degrees of damage.

## 5.4 Field Performance of Single Row Potato Digger

The average soil moisture content and cone index of the potato field were found to be 27.5% (d.b.) and 117 N/cm$^2$ respectively. Potatoes were found to grow upto a depth of 0.21 m from the top of the ridge.

### 5.4.1 Field Efficiency and Field Capacity at Different Forward Speeds

Table 1 shows the field efficiency and field capacity of single row potato digger at different forward speeds.

**Table 1** Field performance data of single row potato digger

| | Test 1 | Test 2 | Test 3 | Test 4 | Test 5 |
|---|---|---|---|---|---|
| Speed of operation, m/sec | 0.52 | 0.63 | 0.74 | 0.83 | 0.88 |
| Depth of operation, cm | 18.8 | 18.9 | 17.8 | 18.9 | 18.4 |
| Field efficiency, % | 95.6 | 95.5 | 95.3 | 95.5 | 95.3 |
| Field capacity, ha/h | 0.13 | 0.16 | 0.19 | 0.21 | 0.23 |

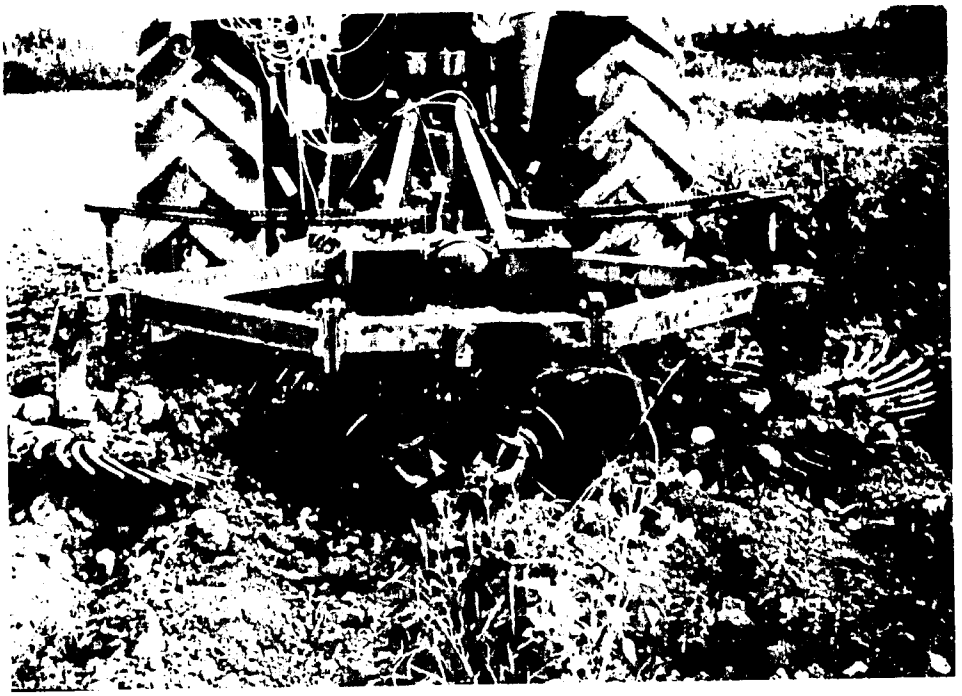

Fig.4 Field testing of spring oscillated rotary disc potato digger

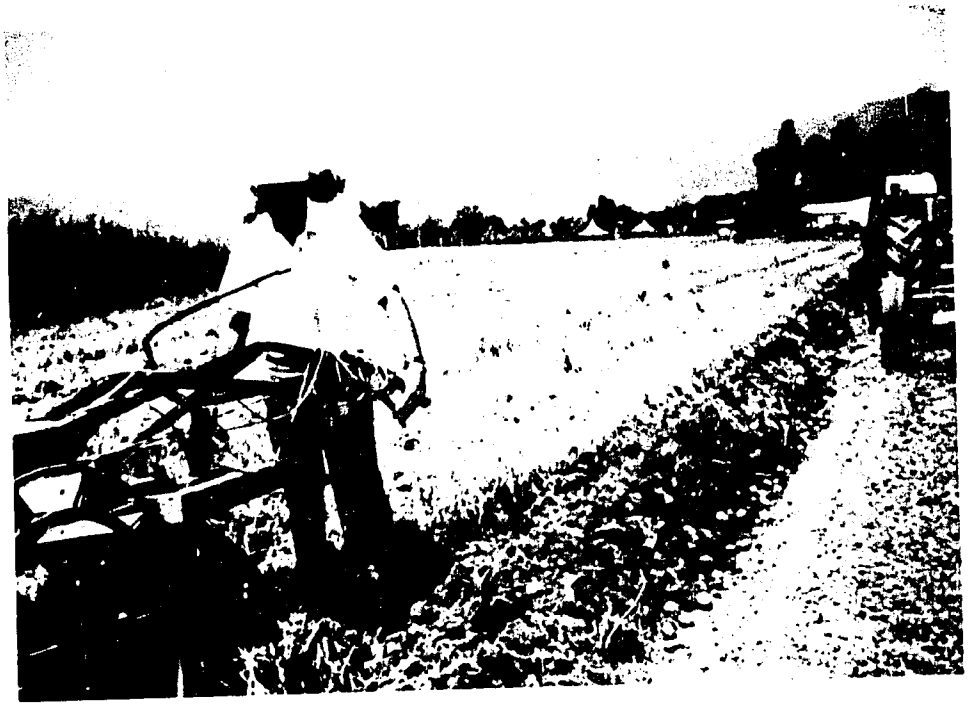

Fig. 5 Field testing of potato digger cum separator

Fig. 6 A view of potato field after harvest

### 5.4.2 Harvesting Efficiency, Exposure and Damage to Dug Potatoes

The harvesting efficiency is defined as the ratio of dug potatoes to the total potatoes from a certain area of the field. The machine harvesting efficiency was found to be 100% as no undug potatoes were observed in the field during testing.

Exposure percentage is defined as the ratio of weight of potatoes visible on the top surface of the soil to the total weight of the dug potatoes from a given area. The exposure percentage varied from 78.3 to 88.1% at different forward speeds (Table 2).

Damage percentage is defined as the percentage weight of potatoes cut or bruised as compared to the total weight of dug potatoes from a given area during the harvesting. The total damage of the tubers was observed below 1% even at higher speeds (Table 2).

### 5.4.3 Power Requirement

The draft, rotary and total power requirement of the potato digger separator at different forward speeds are shown in Fig. 7. The peak power requirement was 2.78 kW at 0.88 m/s. The rotary power increased at a very slow rate with speed, however the draft power increased linearly with the speed. Therefore, the total power increased with increase in forward speed.

**Table 2** Harvesting efficiency, exposure and tuber damage at different forward speeds of operation of single row potato digger cum separator

| | Test 1 | Test 2 | Test 3 | Test 4 | Test 5 |
|---|---|---|---|---|---|
| Average speed of operation, m/s | 0.52 | 0.63 | 0.74 | 0.83 | 0.88 |
| Harvesting efficiency, % | 100.0 | 100.0 | 100.0 | 100.0 | 100.0 |
| Exposure, % | 84.7 | 78.3 | 88.1 | 80.1 | 83.7 |
| Bruised tuber, % | 0.0 | 0.0 | 0.0 | 0.4 | 0.6 |
| Cut tubers, % | 0.0 | 0.0 | 0.0 | 0.2 | 0.3 |
| Total damage, % | 0.0 | 0.0 | 0.0 | 0.6 | 0.9 |

### 5.4.4 Optimum Operating Conditions of the Machine

The single row potato digger cum soil clod separator shows better performance at 0.74 m/s forward speed. Corresponding to this speed, the highest exposure percentage (88.1%) of the potatoes was observed at considerably high field efficiency (95.3%), which is one of the most important consideration in the development of the machine. At this forward speed the disk and separator rpm were 45 and 54, respectively. The field capacity at this speed was found to be 0.19 ha/h.

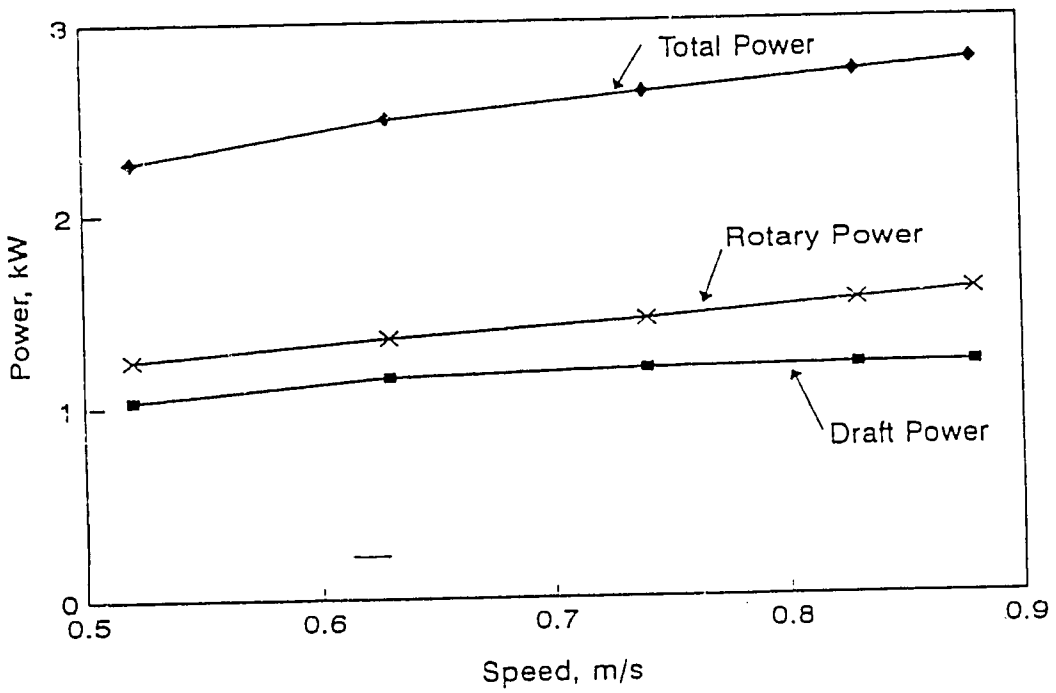


Fig. 7 Draft, rotary and total requirements of the machine at various speeds

## 5.5 Field Performance of Two Row Potato Digger

### 5.5.1 Field Efficiency and Field Capacity at Different Forward Speeds

Average field efficiency and average field capacity of the machine at different forward speed of operation is shown in Table 3. The average field efficiency reduced with increase in forward speed because of the fact that turning time losses were almost the same at all speeds.

**Table 3** Field performance data of two row potato digger

| | Test 1 | Test 2 | Test 3 | Test 4 | Test 5 |
|---|---|---|---|---|---|
| Speed of operation, m/sec | 0.28 | 0.46 | 0.52 | 0.63 | 0.69 |
| Depth of operation, cm | 20.8 | 20.9 | 19.4 | 21.2 | 21.1 |
| Field efficiency, % | 93.2 | 89.4 | 88.3 | 86.0 | 85.0 |
| Field capacity, ha/h | 0.14 | 0.22 | 0.25 | 0.29 | 0.32 |

### 5.5.2 Harvesting Efficiency, Exposure and Damage of Dug Potatoes

The machine harvesting efficiency was found to be 100% as no undug potatoes were observed in the field during testing.

The exposure percentage varied from 67.2 to 77.6% at different forward speeds (Table 4). The maximum exposure percentage of 77.6% was observed at 1.86 km/h. At this speed, the field capacity of the machine was observed as 0.25 ha/h. The total damage of the tubers was observed below 1% (Table 4) at all speeds which is non-significant. The machine had the highest field capacity of 0.32 ha/h at 2.48 km/h, however the exposure percentage was reduced to 70.0%.

**Table 4** Harvesting efficiency, exposure and tuber damage at different forward speeds of operation of two-row potato digger cum separator

| | Test 1 | Test 2 | Test 3 | Test 4 | Test 5 |
|---|---|---|---|---|---|
| Average speed of operation, m/s | 0.28 | 0.46 | 0.52 | 0.63 | 0.69 |
| Harvesting efficiency, % | 100.0 | 100.0 | 100.0 | 100.0 | 100.0 |
| Exposure, % | 68.4 | 73.4 | 77.6 | 73.6 | 70.0 |
| Bruised tuber, % | 0.0 | 0.0 | 0.0 | 0.0 | 0.8 |
| Cut tubers, % | 0.0 | 0.0 | 0.0 | 0.0 | 0.0 |
| Total damage, % | 0.0 | 0.0 | 0.0 | 0.0 | 0.8 |

### 5.5.3 Power Requirement

The draft, rotary and total power requirement of the potato digger cum soil clod separator at different forward speeds are shown in Fig. 8. The total power increased with increase in forward speed. The total power requirement of the machine at 1.86 and 2.48 km/h was 12.0 kW and 15.6 kW respectively. Therefore this machine can be successfully operated by a medium size tractor (30-35 kW) available with LDC farmers. The overall performance of the machine was found satisfactory.

### 5.5.3 Provision of Potato Elevator on Potato Digger

It was observed that farmers had to pick up potatoes from broken ridges in either squatting or bent posture and collect them in plastic baskets which are loaded into a mini-truck at the end of days' work.

To eliminate the drudgery in picking up tubers in bent or squatting posture, it was decided to provide a potato elevator on both single row and two-row digging machines.

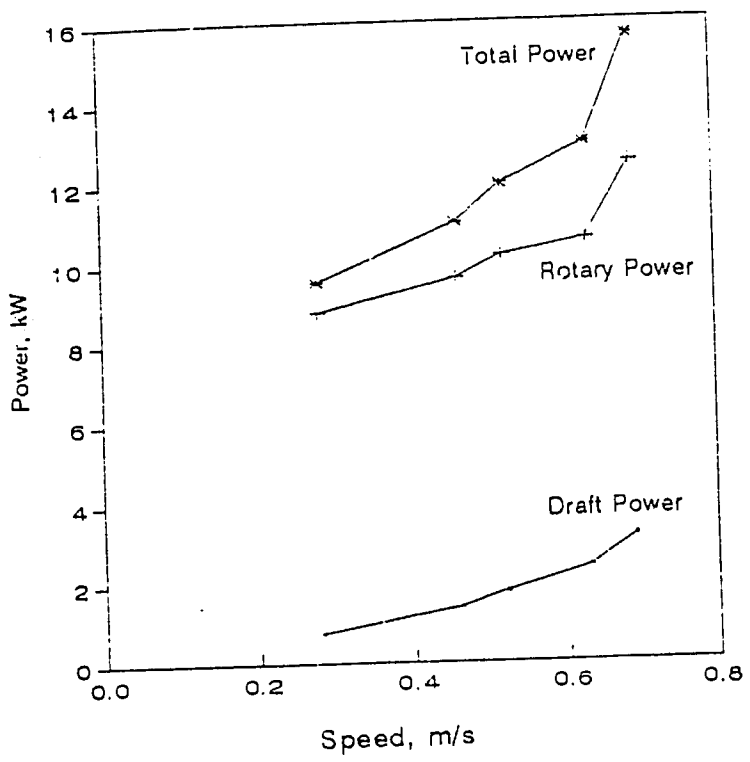


Fig. 8 Draft, rotary and total power requirement of two-row potato digger cum separator

In the modified design for single row potato harvester (Fig. 9& 11), the soil potato mass of the broken ridge is thrown over a curved steel surface by the rotary disk. This curved mild steel surface is inclined to the horizontal at 15°. As the machine moves forward, a mixture of tubers and soil clods from inclined curved mild steel surface is pushed over the inner surface of a cylindrical cage type conveyor.

This cylindrical conveyor has a length 425 mm and diameter 600 mm and rotates at 56 rpm. The surface of the cylinder is made up of hollow mild steel tubes. The tubes are parallel to the length of the cylinder and are spaced at 33 mm from each other. This conveyor also sifts soil mass but retains tubers larger than 33 mm.

This cylindrical conveyor transfers mixture of tubers and soil clods over an inclined chain type conveyor. The conveyor surface is made of PVC rollers and aluminum angle bars spaced alternately with spacing of 35 mm. PVC rollers are 265 mm long with diameter of 42 mm. The aluminum angle bars are 50 mm x 50 mm in size. The PVC rollers provide a smooth surface to eliminate injury to tubers. The aluminum angle bars are light in weight and prevent the tubers from sliding down as the inclination of roller chain conveyor is more than the angle of rolling friction of tubers with PVC surface.

There is a gap of 35 mm between the roller surface and aluminum angle bar to allow soil clods to pass through but to retain tubers larger than 35 m. This inclined chain conveyor lifts the potatoes with some soil clods above the level of traction wheel and drops them over a rubber conveyor belt laterally inclined to the horizontal at an angle of 10°. Ideally at this angle, all potato tubers should roll down but soil clods should not roll down in lateral direction, because the tuber's angle of rolling friction with the rubber surface is approximately 90. As a result soil clods continue riding the belt and are thrown over the ground. The tubers rolling in lateral direction fall into two plastic baskets which are emptied from time to time during harvesting operation.

In the modified design of double row potato harvester (Fig.10 & 12), the rotary disk throws the mixture of soil clods and potatoes over a curve mild steel surface, which in turn throws it over the elevating conveyor. The design of elevating conveyor of both single row and double row machines is identical. The elevator drops the mixture of the tubers and larger soil clods over a rectangular collection box. The collection box is shaped like a hopper. The box has a hinged rectangular opening at the bottom to facilitate the unloading of the tubers.

1. Diesel engine
2. Tractor wheel
3. Gear box with 45° bevel gears
4. Chain-sprocket drive
5. Perforated disc mounted on four springs
6. Frame
7. Gauge wheel
8. Handle
9. Inclined chain type conveyor
10. Cylindical cage type conveyor
11. Rubber conveyor belt
12. Basket
13. V belt-pulley drive
14. Curved steel surface

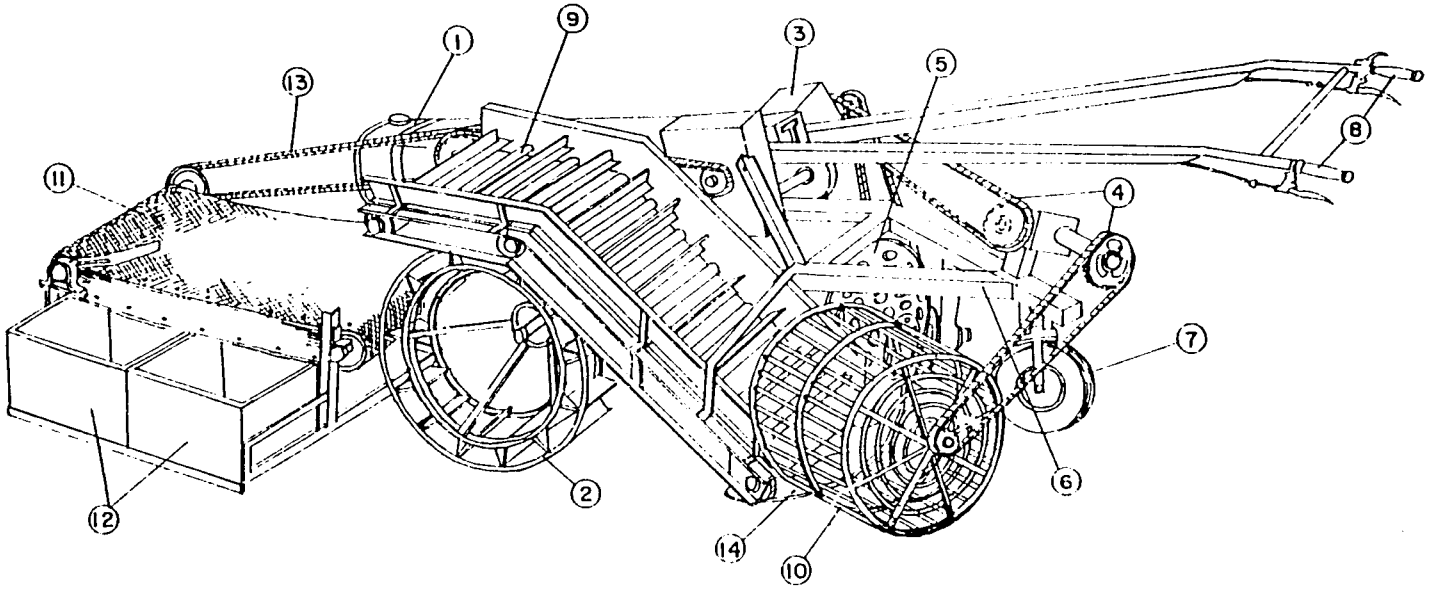


Fig.1 Two wheel tractor driven single row oscillating disk potato digger

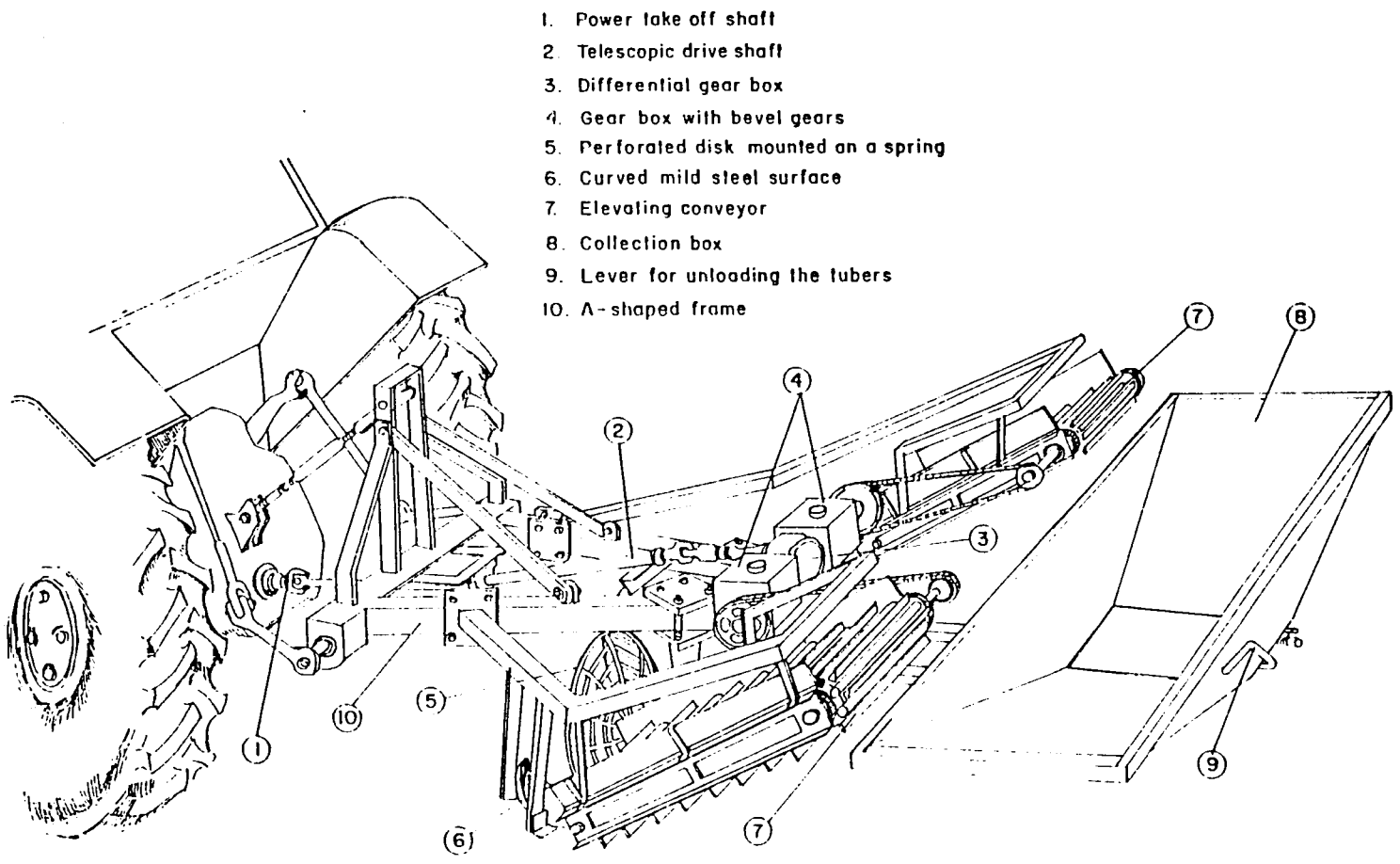


Fig. 10 Four Wheel Tractor Driven Oscillating Disk Potato Digger

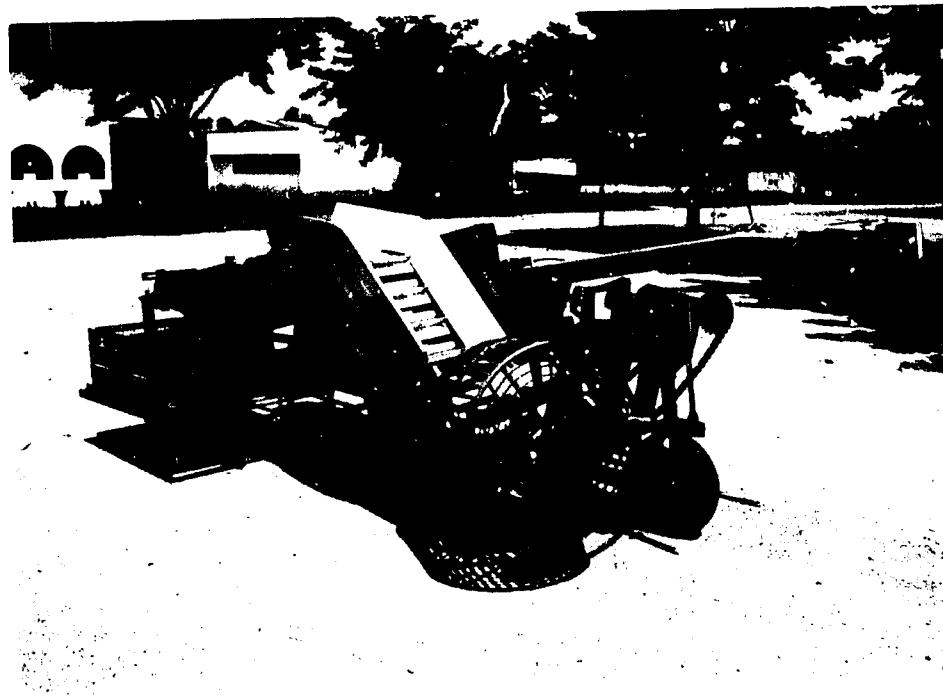

Fig. 11 Two wheel tractor driven single row oscillating disk potato digger

Fig. 12 Four wheel tractor driven double row oscilating disk potato digger

## 5.6 Cost Analysis

Costs of newly developed machine was determined according to the market price of the materials and labor charge prevailing in Thailand (1 US dollar = 25 Baht) is mentioned as follows:

1. Two row potato digger:

| | | |
|---|---|---|
| a) Frame | = | 3500 Baht |
| b) Digger | = | 30500 Baht |
| c) Conveyor | = | 8000 Baht |
| d) Trolley | = | 2000 Baht |
| e) Labor | = | 16000 Baht |
| Total | = | 60000 Baht |
| Profit (15%) | = | 9000 Baht |
| Market price | = | 69000 Baht |

2. Single row potato digger

| | | |
|---|---|---|
| a) Frame | = | 800 Baht |
| b) Digger | = | 26000 Baht |
| c) Conveyor | = | 5200 Baht |
| d) Collector | = | 2000 Baht |
| e) Labor | = | 10000 Baht |
| Total | = | 44000 Baht |
| Profit (15%) | = | 6600 Baht |
| Market Price | = | 50600 Baht |

### 5.6.1 Harvesting cost of two row potato digger

Harvesting cost of potatoes by two row potato digger was determined considering fixed and variable costs. The price of tractor was considered 500000 Baht with 10 years life, yearly working time 1000 h, salvage value 10% of purchase price, interest rate 10%, Tax, Insurance and Shelter (TIS) cost 3% of purchase price and R&M cost 60 Baht/h. Life of two row potato digger was assumed as 5 years. The annual Fixed cost is 18285 Baht and variable cost is 928 Baht/ha. Prevailing manual harvesting cost is 7500 Baht/ha. Break-even point for economic harvesting by the newly developed digger versus manual harvesting was determined considering various areas of harvested land within the limit which can be harvested by the digger. The break-even harvesting area of two row potato digger was determined to be 2.83 ha (Fig. 13).

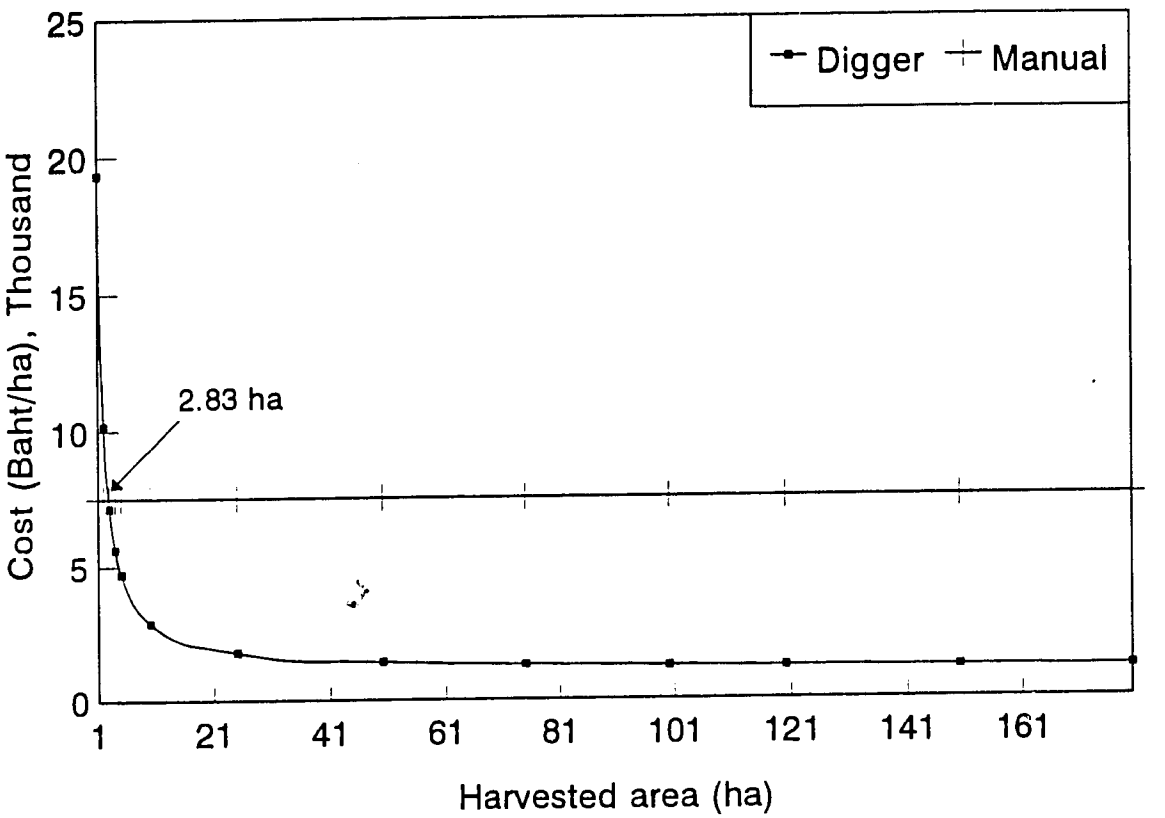


Fig. 13 Break-even harvesting area of two row potato digger

### 5.6.2 Harvesting cost of single row potato digger

Harvesting cost of potatoes by single row potato digger was determined considering fixed and variable costs. The price of two wheel tractor was considered 70000 Baht with 5 years life, yearly working time 1000 h, salvage value 10% of purchase price, interest rate 10%, Tax, Insurance and Shelter (TIS) cost 3% of purchase price and R&M cost 31.5 Baht/h. Life of single row potato digger was assumed as 5 years. The annual Fixed cost of single row potato digger is 15433 Baht and variable cost is 562.80 Baht/ha. Break-even point for economic harvesting by the single row potato digger versus manual harvesting was determined considering various areas of harvested land within the limit which can be harvested by the digger. The break-even harvesting area of single row potato digger was determined to be 2.22 ha (Fig. 14).

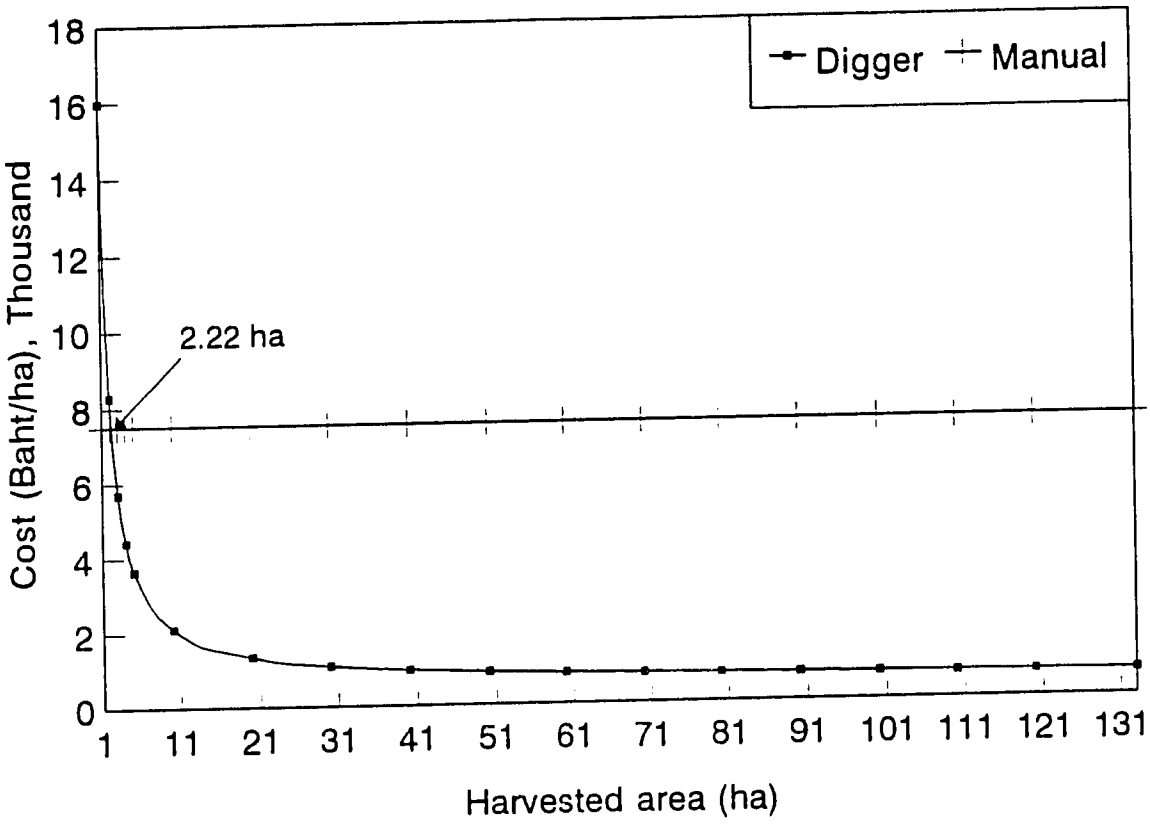


Fig. 14 Break-even harvesting area of single row potato digger

## 6. IMPACT, RELEVANCE AND TECHNOLOGY TRANSFER

Single row and 2-row oscillating potato diggers driven respectively by two wheels and four wheels tractors will be very useful for potato farmers of developing countries with small, medium and large size holdings. The project has attracted the attention of individual farmers, manufacturers of agricultural machines and researchers not only in developing countries but also in the developed world as evident from many enquiries received by the Principal Investigator.

The findings of the project have been presented at and published in the proceedings of International Conferences. These findings will also be published in International Journals Shortly. Engineering drawings will be supplied to interested manufacturers in various developing countries on request. Both single row and double row potato diggers will be made available to local farmers after they are manufactured in different developing countries.

Larger scale trials have been made only in Thailand but not in other countries due to excessive cost of transportation of equipment from Thailand to other countries.

Now potato farmers of developing countries have access to a low cost potato digger which can be powered by a two wheel tractors (8-10 hp) and four-wheel tractor (35 hp) with tuber damage

of less than 1%. These machines are quite safe to operate and eliminate human drudgery of manually digging and picking potatoes in the field in bent posture.

The successful completion of the project has contributed in improving the expertise of technicians, research associates working on the project. Principal Investigator and Collaborating Israeli scientist have now acquired new vision of problems in potato harvesting and their solutions.

## 7. PROJECT ACTIVITIES/OUTPUTS

Prof. Gary M. Hyde of the Washington State University, Pullman visited AIT, Bangkok and Fang in Chiang Mai district during field testing of potato digger as a consultant to this project and discussed the ways and means for making improvements in design.

Prof. C.P. Gupta, Principal Investigator visited Washington State University at Pullman in June, 1993 to meet Prof. Gary M. Hyde and discussed results obtained during field testing of machines and solutions to some technical problems faced during the implementation of the project.

Prof. G. Manor from Technion, Israel Institute of Technology, Haifa, visited Bangkok in September 1994 and discussed progress as well as further steps to be taken to fulfil the objectives of the project.

Principal Investigator Prof. Chandra P. Gupta visited Technion-Israel Institute of Technology, Haifa to discuss technical aspects of the project with collaborating Israeli Scientist, Prof. Dan Wolf on the following dates:

8-15 December 91, 8-13 August 1993, and 17-24 August 1995

Prof. Dan Wolf visited AIT, Bangkok on 9th October, 1995. He was satisfied with the performance of both machines and agreed to help in patenting both machines.

**Publications**

1. Gupta, C.P. and P. Navaratnam, 1991. Design parameters of oscillating rotary disk potato digger. Paper No. 911010 presented at the 1991 International Summer Meeting of ASAE. Albuquerque, New Mexico, June 23-26.

2. Gupta, C.P. and C.P. Bohra, 1991. Field performance of oscillating rotary disk potato digger. Paper No. 915531, presented at the 1991 International Winter Meeting of ASAE held at Chicago, Illinois, December 17-20.

3. Gupta, C.P. and C.P. Bohra, 1992. Development of rotary potato soil clod separator. Paper No. 921075, presented at the 1992 International Summer Meeting of ASAE held at Charlotte, North Carolina, June 21-24.

4. Gupta, C.P. and C.P. Bohra, 1992. Two wheel tractor driven rotary disk potato digger. Paper No. 921510, presented at the 1992 International Winter Meeting of ASAE, held at Nashville, Tennessee, 15-18 December.

5. Gupta, C.P. and C.P. Bohra, 1993. Field evaluation of vibrating powered disk potato digger. Paper No. 931047, presented at the 1993 International Summer Meeting of ASAE/CSAE, held at Spokane, Washington, 20-23 June.

6. Gupta, C.P. and C.P. Bohra, 1993. Two wheel tractor driven rotary potato soil clod separator. Paper No. 931567, presented at 1993 ASAE Winter Meeting of ASAE, held at Chicago, Illinois, December 14-17.

7. Gupta, C.P., B.K. Yadav, K. Chaiyaphol, N.D. Tuan and C.P. Bohra, 1994. Modification and field evaluation of disk type potato digger. Paper No. 948016, presented at the 1994 International Summer Meeting of ASAE held at Kansas City, Missouri, June 19-22.

8. Gupta, C.P., C.P. Bohra and B.K. Yadav, 1994. Development of a powered disk potato digger cum soil clod separator. Proceedings of the International Agricultural Engineering Conference held at Asian Institute of Technology, Bangkok, Thailand, 6-9 December.

9. Gupta, C.P., 1995. Development of walking type disk share potato digger. Paper No. 958731, presented at 1995 ASAE Annual Meeting held at Chicago, Illinois, June 18-23.

## 8. PROJECT PRODUCTIVITY

The project accomplished all of the proposed goals.

## 9. FUTURE WORK

Mechanical power transmission system was used in single row and double row machines to keep the cost of the machines within the purchasing power of LDC farmers. Using the same principles of operation the potato digger machines may be designed with hydraulic power transmission system which is more costly but more convenient to use and also more compact in size than the newly developed machines. For owners of high power tractors (75 h.p. or more) even a four row machine may be designed on the same principle. The orientation of the elevating conveyor may be changed to unload the potatoes into a trailer moving by the side of the machine.

## 10. LITERATURE CITED

Betram, H.H. 1988. Two stage potato harvesting, four rows at a time. Recolte des pommes de terreen deux phases et par quarte rangs a la fois, Technique Agricloe, 50(13):10-12.

Gagulina, V.G., V.V. Gagulina and V.V. Gagulin, 1983. Mechanical damage to potato tubers. Vestnik Seskokhozais Tvennoi Nauki, 12:118-126.

Gupta, C.P. and Rajput, D.S. 1982. Soil Reactions to Tillage Implements. Final Technical Report of PL-480 Scheme, Grant No. FG-In-389, Project No. A7-AE-7, Agricultural Engineering Department, Indian Institute of Technology, Kharagpur-721302, India.

Hutchinson, P.S. 1988. A comparison of damage to potato on impact with different types of web rods. Department note no. 7. Scottish Center of Agric. Engng. 6p.

Hyde, G.M. 1986. Solid and perforated rotary blade performance on a potato harvester, ASAE Paper No. 86-1557, 16p.

Verma, S.R. and Garg, R.L. 1971. Design and field performance of tractor mounted single row elevator-digger for potato. Indian J. Agric. Sci. 41(8):666-671.