PN-ABX-626

POSTHARVEST INSTITUTE

Postharvest Institute for Perishables

Indonesia Agribusiness Development Project

Technical Assistance

to

Small Scale Tofu Industry

in Indonesia

for

Development Alternatives, Inc.

Prepared by

Dr. Wilmot B. Wijeratne

October 1995

University of Idaho

College of Agriculture

PN ABX-626

AGENCY FOR INTERNATIONAL DEVELOPMENT
PPC/CDIE/DI REPORT PROCESSING FORM

ENTER INFORMATION ONLY IF NOT INCLUDED ON COVER OR TITLE PAGE OF DOCUMENT

1. Project/Subproject Number: 497-0368

2. Contract/Grant Number: AID 497-0368-C-00-3102-00

3. Publication Date: October 1995

4. Document Title/Translated Title: Technical Assistance to Small Scale Tofu Industry in Indonesia

5. Author(s)
1. Wigeratne, Wilmot B.
2.
3.

6. Contributing Organization(s): Postharvest Institute for Perishables

7. Pagination: 74p.

8. Report Number:

9. Sponsoring A.I.D. Office: Agro-Enterprise & Environment USAID/Jakarta

10. Abstract (optional - 250 word limit)

11. Subject Keywords (optional)
1. Tofu
2. Indonesia
3.
4.
5.
6.

12. Supplementary Notes

13. Submitting Official: Harvey C. Neese

14. Telephone Number: (208)885-3576

15. Today's Date: 12/06/95

DO NOT write below this line

16. DOCID

17. Document Disposition: DOCRD [ ] INV [ ] DUPLICATE [ ]

WORK SHEET

Postharvest Institute for Perishables

Indonesia Agribusiness Development Project

Technical Assistance to Small Scale Tofu Industry in Indonesia

for

Development Alternatives, Inc.

Prepared by

Dr. Wilmot B. Wijeratne

October 1995

LIST OF ACRONYMS AND TRANSLATIONS

CGMP	Current Good Manufacturing Practices
COP	Cost of Production
DG-IHP	Directorate General of Agro Industry
IADP	Indonesian Agribusiness Development Project
IRDABI	Institute for Research and Development of Agro-Based Industries
KOPTI	Cooperatives of Tahu and Témpé Processors
KUB	Cooperative Enterprises
LP	Liquified Propane
Ontjom	A type of témpé, using peanuts instead of soybeans
MOI	Ministry of Industry
Penilik	Perindustrian, extension staff in the Ministry of Agriculture
Rp.	Rupiah, Indonesian currency, Rp. 2150 equal US $1.00
Sparging	To sprinkle or splash
TEFC	Totally Enclosed Fan Cooled
Tahu	Tofu
Témpé	Cake of fermented soybeans
TOR	Terms of Reference

TABLE OF CONTENTS

Page

Section I

Executive Summary 1
Background 5
Methodology 6
Summary of Major Findings 7
Summary of Major Recommendations 9

Section II

5. Case Study 11
5. 1 Scope of the Study 11
5.2 Buildings 11
5.3 Utilities 12
5.3.1 Power and Fuel 12
5.3.2 Water 12
5.4 Labor 12
5.5 Raw Materials 13
5.6 Chemicals 14
5.7 Packaging 14
5.8 Equipment and Accessories 15
5.8.1 Cleaning 15
5.8.2 Soaking 15
5.8.3 Grinding 15
5.8.4 Cooking 15
5.8.5 Separation 16
5.8.6 Curding 16
5.8.7 Pressing 16
5.8.8 Sanitation and Waste Management 17
5.9 Costs and Returns 18

6. Potential for Improvement 18
6.1 Building and Utilities 18
6.2 Raw Materials 21
6.3 Equipment 21
6.4 Processing 22
6.5 Packaging 22
6.6 Sanitation 22
6.7 Waste Management 22

7. Recommendations to Improve Current Status 23
7.1 Application of Good Manufacturing Practice 23
7.1.1 Organizational Structure and Scope 23
7.1.2 Implementation 25
7.1.3 Recognition of Innovators 25
7.1.4 Teaching by Example 26

7.1.5 Publicity 26
7.1.6 Expected Impact 26

7.2 Improving Existing Equipment 26
7.2.1 Educating Equipment Manufacturers 26
7.2.2 Cooking Vessels 26
7.2.3 Grinders 26
7.2.4 Belt and Chain Drives 27
7.2.5 Equipment to be Discouraged 27

8. Recommendations for Introduction of New Technology 27
8.1 Model 1 28
8.1.1 Equipment Profile 28
8.1.2 Estimated Cost 28
8.1.3 Plant Layout 28
8.1.4 Operation and Management 29
8.2 Model 2 29
8.2.1 Equipment Profile 29
8.2.2 Estimated Cost 30
8.2.3 Plant Layout 30
8.2.4 Operation and Management 30
8.3 Model 3 31
8.3.1 Equipment Profile 31
8.3.2 Estimated Cost 32
8.3.3 Plant Layout 32
8.3.4 Operation and Management 32

9. Recommendations for Research and Development 33

Appendix A Terms of Reference 34
Appendix B Case Study Questionnaire 37
Appendix C-1 SoyaCow Grinder 61
Appendix C-2 SoyaCow Press 62
Appendix C-3 SoyaCow Steam Generator 63
Appendix C-4 SoyaCow Plant Layout 64
Appendix D Model 2 - Plant Layout 65
Appendix E Model 3 - Plant Layout 66

Enclosures: Takai Tofu & Soymilk Equipment Company Catalog
Master-Bilt Cooler Specifications

SECTION I

Executive Summary

This study was undertaken to identify constraints facing the small scale tofu[1] industry, suggest methods to overcome those constraints, assess current processing practices and to develop an improved model for tofu processing. This report is based on a case study of six tofu processing enterprises in the Jakarta and Bogor areas. Briefings from the Director of Small Scale Agro-Based Industries, his staff and the Indonesia Agribusiness Development Project (IADP) provided guidelines for the study. The methodology for the study was prepared and presented according to the terms of reference (TOR). The case study of tofu enterprises focused on physical facilities, processing technology, productivity and product quality. Published literature on past and current work related to the development of the tofu industry and personal contacts with representatives of relevant institutions provided valuable information to supplement the findings of the case study.

Ministry of Industry (MOI) statistics indicate that there are some 25,000 small scale tahu[1] enterprises in the country and 1,700 in the Greater Jakarta area alone. While tofu is widely consumed, it is a highly perishable product. There is no refrigeration during transport and marketing of the product. In response to these factors, the tofu industry has developed into the present structure where a large number of small enterprises supply small geographical areas on a daily basis.

A primary constraint against development of the industry is the logistical problem of reaching the large number of enterprises scattered in wide geographic areas. Secondly, a segment of the small enterprises are operated at subsistence level, where tofu processing is physically and functionally integrated within the households. Upgrading such facilities is a difficult task. In other cases, tofu processing is carried out in buildings which are adjoining, but separated, from the households. These enterprises offer potential for improvements.

Because of these limiting factors, not all of the possible interventions suggested in the report can be implemented across the whole spectrum of the industry. Improvements in plant sanitation and better manufacturing practices should apply to the entire industry. Upgrading facilities and equipment will be applicable to the segment where processing is carried out in separate buildings and to new enterprises.

Current programs for relocating tofu processors in newly developed areas offer an excellent opportunity to upgrade tofu processing enterprises. The recommendations given for proper design of buildings and utilities, upgrading equipment and adopting sanitary practices can all be implemented in the construction of processing facilities in the new locations. Such action can set the pace for a second generation of improved tofu processing enterprises. In the longer term, these improved enterprises would have a positive influence on bringing about changes in the traditional tofu processing sector.

Government Institutions such as the Institute for Research & Development of Agro-Based Industries (IRDABI) have technical capabilities to develop the tofu industry. IRDABI has training expertise and

---

[1] Tofu, the English version and tahu, the Indonesian translation are used interchangeably in this report.

on-going applied research on byproduct utilization. Training of trainers has also been attempted in the past with extension staff. However, the knowledge and expertise cannot be effectively disseminated without the active participation of the tofu industry. It is suggested that the possible role of the Cooperatives of Tofu and Témpé Processors (KOPTI) in the process of technology transfer should be investigated. Two of the KOPTI contacted during the case study expressed interest in playing a role in the development of the industry. Investment in upgrading processing facilities, providing trainers from among the membership and facilitating in-house training at selected tofu enterprises are possible roles for the KOPTI.

Enterprises that are located in crowded urban dwelling areas will not lend themselves to upgrading along the specific guidelines provided in the report. Those that are located in suburban areas with space available would lend themselves to upgrading of physical facilities in conformity with good manufacturing practices.

From the limited information gathered in the case study, labor utilization and productivity appear to be good. Labor cost, as percent of cost of production (COP), varied from 25 to 18 as processing capacity increased from 50 kg/day to 350 kg/day of beans. Labor's share of value added varied from 45% to 28% under the same conditions.

Imported soybeans appeared to be of better quality than local soybeans. Some entrepreneurs indicated a preference for local soybeans which are perceived to give higher yields of tofu. Food beans imported from the U.S. would be an admixture of different varieties received at the grain elevators.

Identity-preserved soybeans, specifically suited for tofu production, can also be obtained from U.S. suppliers. Several U.S. sources are quoted in the report. Soybeans as received in the plant are used directly for processing without removal of foreign material. Dry cleaning of soybeans before processing is desirable.

From a sanitary standpoint, the processing equipment represented a range from some that would be considered inappropriate to some that would be acceptable. It is apparent that with necessary expertise, equipment for a fairly sanitary operation can be selected from local sources. Acid whey is widely used as a coagulant in tofu making. While this practice reduces the cost of production, its implications on the microbiological quality of the product (shelf life) should be investigated under local conditions. No weighing or measuring is done at any point in the processing line. All process controls are carried out by experience. Exercise of proper controls at critical points in the process will contribute to a consistent quality product and enable assessment of production performance.

Poor sanitation was a common problem in all processing enterprises covered in the case study. Some enterprises do not lend themselves to sanitary practices by virtue of poor building design. The condition of all enterprises can be considerably improved by creating awareness on sanitary practices relating to building, equipment, processing and personnel.

A study conducted in 1988 reported that the costs of soybeans and tofu were Rp.585 and Rp.750 respectively. The case study revealed that corresponding figures at the present time are Rp. 900 and Rp. 1,900. Bean price has increased by 53% and tofu price increased by 150% over the 1988 levels. Even at the small scale of operations, tofu producers appear to receive reasonable returns.

It was found that solid waste from tofu processing is utilized for livestock feed, processing of ontjom and témpé. Liquid waste management poses a serious logistical problem because small enterprises are

located in urban dwellings and tofu whey cannot be isolated and consolidated. Liquid waste management programs may become feasible under relocation schemes.

Three strategies, along with possible action plans, are recommended to improve the industry in a systematic manner.

The first is to improve present conditions of plant sanitation and hygiene. While this can be achieved without heavy capital investment on the part of the processor, it takes an effective method of educating them. The MOI's limited extension staff (Penilik Perindustrian) will not be able to reach each of the small scale producers. A large segment of the tofu processors are organized under Cooperatives of Tofu and Témpé Producers. The KOPTI may be able to play a role in the process of educating its membership. It is also felt that direct involvement of leaders from the industry will be crucial to implement better manufacturing practice. Accordingly, a five-tier model, involving MOI, Penilik, KOPTI, tofu industry leaders and entrepreneurs has been proposed for technology transfer. A possible action plan is presented for implementation and evaluation of this model on a pilot scale.

The second strategy is to improve currently used processing equipment and processing methods. Sanitary construction of equipment can be improved to make them safer, more functional and easier to maintain. Major improvements that need to be made have been identified. The equipment manufacturing sector should be informed of the need and opportunity to improve its equipment, and thereby, add value to the equipment. It is recommended that the MOI should develop and disseminate simple guidelines to equipment manufacturers on sanitary design of equipment and specific improvements needed in tofu processing equipment.

The third strategy is to introduce improved processing technology that has the potential to increase productivity, improve product quality and prolong shelf life of the product. In considering improved technology, the focus was on efficiency, sanitary quality of equipment, output levels and cost.

Three models are presented for upgrading processing equipment and technology in small scale tofu enterprises. The first model is a low output system of Canadian origin, that will be compatible with the needs of the very small scale processors. It replaces traditional equipment used for grinding, cooking and separation of residue with sanitary equipment. The system has been tested and found successful in India. The second model is based on Japanese technology to upgrade the current system of cooking, grinding and separation. The third model is a further upgrade from the second model, including equipment for packaging and refrigeration.

It is recommended that upgraded models use calcium sulfate as the coagulant, instead of acid whey. Calcium coagulated tofu already receives a premium over acid coagulated tofu in the local market. Acid whey is produced by natural fermentation of sweet whey. Hence, it is to be expected that acid coagulated tofu will carry a higher microbial load relative to the calcium coagulated product. Higher microbial loads will have a negative impact on the shelf life of the product. Furthermore, cost saving by use of acid whey will be negated by the cost of alkali required to neutralize residual whey during waste treatment.

It is recommended that one or more of the upgraded models should be introduced by the MOI. These should function as commercial units operating as Common Service Facilities or on a cooperative basis. They should serve as centers for demonstration to tofu processors. This will allow exposure of entrepreneurs to the improved systems and help them make decisions on upgrading their processing operations.

A description of recommended equipment, estimated costs and plant layouts are provided in the report. In the course of evaluating the proposed models, local authorities may choose to visit suppliers and also observe the equipment in operation at commercial tofu industries. This consultant could assist in facilitating such visits.

Several areas have been identified for applied research to resolve technical problems related to development of the industry. They include comparative evaluation of acid-coagulated and calcium coagulated tofu, comparative evaluation of local and imported soybeans for yield and quality of tofu, market potential for packaged tofu and stabilization of tofu whey.

Background

Tofu is a widely consumed food product in Indonesia. More than 80% of households in Java and 55% of households in North Sumatra consume tofu on a regular basis. The national production of tofu was estimated at 714,700 tons in 1987. The consumption of tofu increased from 3.42 kg/cap/year in 1969 to 5.78 kg/cap/year in 1985. The Indonesian tofu industry is characterized by some 25,000 small scale enterprises each employing fewer than 20 employees. The small scale sector produces 99 percent of the national tofu output.

Tofu is a perishable product. Under ideal manufacturing practices, the shelf life of tofu is 7-10 days. However, under Indonesian conditions, the shelf life of the product is less than two days. This reflects sub-optimal manufacturing conditions and lack of refrigerated storage, transport and handling. Therefore, it is generally recognized that the small scale tofu industry could and should be improved to produce a better product with longer shelf life.

In order to address this problem, the Directorate General of Agro Industry (DG-IHP) requested technical assistance (TA) from the Agribusiness Development Project (ADP) to determine possible interventions to develop the small scale tofu industry.

Dr. Wilmot B. Wijeratne, a soybean utilization technologist with 20 years experience, was asked to undertake a TA assignment on the development of the small scale tofu industry. Dr. Wijeratne commenced his assignment on 11 October 1995. The results of his work are contained in this report.

Methodology

This work was based on a case study of six tofu processing enterprises in the Jakarta and Bogor areas. In addition, the study was supported by personal contact with officials of the Directorate General of Small Scale Agro-Based Industry, Institute for Research and Development of Agro-Based Industry (IRDABI), Balai Besar Industri Kimia, ADP and Cooperatives of Tofu and Témpé Producers (KOPTI) of South Jakarta, Central Jakarta, East Jakarta and West Jakarta.

The study focused on, but was not limited to the following:

1. Better and cleaner tofu processing methods

2. Package and packaging techniques to improve shelf life

3. Methods for improving tofu quality

4. Methods for improving tofu factory layout design and waste management

5. Design of an appropriate technology for the small scale tofu processing industry

6. Improving sanitary aspects of the tofu industry

7. Design a working model, identifying and documenting both appropriate technical and organizational priorities that could be used in a cooperative venture for tofu processing at the village level (Koperasi Usaha Bersama)

Summary of Major Findings

1. Small scale tofu processing enterprises are operated under unsatisfactory sanitary conditions. Significant improvements can be made by creating awareness among processors.

2. The existing design of processing buildings makes it difficult to maintain a clean processing environment.

3. Most processing equipment does not conform to modern sanitary design. They could be better maintained if necessary knowledge is available to the processor.

4. Some tofu enterprises process in the household itself. Improvements in building and facilities cannot be easily made in such cases.

5. Enterprises which process tofu in buildings adjacent to, but separate from the household, can be improved in the design.

6. Soybeans, as purchased, are directly used for processing, regardless of the foreign material content. Foreign material used in the process increases the microbial load and adversely affects shelf life of the product.

7. Imported soybeans had less foreign material compared with local soybeans. Some entrepreneurs perceive that local soybeans are better suited for tofu making.

8. Naturally fermented acid whey is widely used as a coagulant. Calcium sulfate is used only to a limited extent, even though the calcium coagulated product brings a premium price.

9. All process controls are carried out by experience. Weighing and measuring is seldom practiced in production operations.

10. Tofu is sold in bulk. Bulk handling and transport is not carried out under hygienic conditions.

11. The shelf life of tofu under present conditions is less than two days.

12. Ground water obtained from tube wells is directly used in processing. Water hardness was apparent from build up of mineral deposits at the bottom of tofu cooking vessels.

13. Solid waste (residue) from tofu processing is utilized for livestock feed or for further processing into témpé and ontjom. Liquid waste (whey) is usually disposed of into municipal canals or open waterways. In addition to organic matter, the widespread use of acid whey results in low pH in liquid waste.

14. The location of tofu enterprises scattered in crowded, urban residential areas presents practical difficulties in isolation and consolidation of liquid whey for treatment.

15. IRDABI has applied research programs and training expertise highly relevant to the needs of the tofu industry. However, the existence of a very large number of small tofu enterprises presents a constraint against rapid transfer of technology available from IRDABI.

16. KOPTI is providing valuable services to its membership by being a reliable source of raw material. KOPTI officials contacted during the course of the study expressed interest in participating in other activities related to development of the industry.

17. East Jakarta KOPTI is implementing a project for relocating tofu processors in a newly developed area. A similar program is underway in Perkampungan Industri Kecil, West Jakarta. There is opportunity to implement improved models for tofu processing in these settlements.

Summary of Major Recommendations

1. MOI/IRDABI to develop a simple set of guidelines for food plant sanitation that can be implemented by small enterprises with little or no additional investment. The guidelines should cover clean processing environment, proper cleaning and maintenance of equipment, safe handling of product and worker hygiene. The guidelines should be based on the Current Good Manufacturing Practices (CGMP), but placed in the context of the small scale tofu industry.

2. MOI/IRDABI to develop a dialog among entrepreneurs, based on the guidelines. This could be implemented in one or more pilot projects, with active participation of the industry. One possibility may be to focus on the membership of a KOPTI and to carry out the program under the auspices of the KOPTI.

3. KOPTI to select and empower responsive individuals from among entrepreneurs who may act as leaders in disseminating guidelines through community level programs. Empowerment should take the form of specialized training at IRDABI, appointment to leadership roles within the KOPTI membership and provision of resources required to carry out community level activities.

4. KOPTI with assistance from MOI/IRDABI, to promote implementation of the guidelines in progressive tofu enterprises and use them as centers for observation by other processors.

5. MOI to promote and support establishment of one or more model enterprises with upgraded facilities and equipment (as described in the report). The models should be operated as Common Service Facilities or as cooperative enterprises (KUB).

6. Use the model enterprises to demonstrate upgraded technology to tofu processors.

7. MOI/IRDABI to provide to KOPTI and other suppliers of equipment, the basic requirements for sanitary design of food processing equipment as specified in the CGMP. This would help develop improved capabilities among local artisans who manufacture tofu processing equipment.

8. MOI/IRDABI to set norms for upgrading existing processing facilities. These should include locally available equipment of good quality, sanitary design of buildings, good manufacturing practices, and recognize entrepreneurs who make such improvements by providing a seal of approval or certification.

9. Use print media, radio and television to focus on the need to improve the tofu processing industry and to highlight activities being carried out in terms of points 1-8 above. Feature articles in print media and forums on local radio and/or television would be effective tools. MOI, IRDABI, KOPTI and progressive tofu makers should participate in this activity.

10. IRDABI to carry out applied research on comparative evaluation of local and imported soybeans with respect to yield and quality of tofu. If imported soybeans are found consistently inferior, MOI should consider importing identity preserved soybeans suitable for tofu making. U.S. sources for identity preserved soybeans are quoted in the report.

11. IRDABI to carry out applied research on market potential of calcium coagulated tofu.

12. IRDABI to carry out applied research on comparative evaluation of physical, chemical, sensory and microbiological quality of acid-coagulated and calcium-coagulated tofu.

13. IRDABI to utilize the KOPTI umbrella to publicize and disseminate its technologies for processing value added products from tofu byproducts.

14. IRDABI and Balai Besar Industri Kimia to set up a joint project for studying stabilization tofu whey in conjunction with establishment of model tofu processing enterprises discussed in point No. 5 above.

SECTION II

5. Case Study

5.1 Scope of the Study

The case study covered six tofu enterprises in the Jakarta and Bogor areas. These enterprises are identified as follows:

I. Mr. Jumali, Tanjung Barat Rt. 03/RW02, Jakarta Selatan
II. Mr. M. Memet, Rawa Selatan Rt. 11/02, Kel Kp Rawa, Johar Baru, Jakarta Pusat
III. Mr. Okim, Cibalagung, Bogor
IV. Mr. Ismail, Perkampungan Industri Kecil, Semanan, Jakarta Barat
V. Mr. Dacep Darajat, Jl. Sirsak, Rt. 02/RW10. No.22, Utan Kayu Utara, Jakarta Timur
VI. Mr. Supriyatna, Perusahaan Tofu Semedang, 2L Raya Setu Rt.08/12W No.35, Kel setu Kec. Cipayung, Jakarta Timur

The enterprises were contacted by the local counterpart with the assistance of the respective KOPTIs. A questionnaire (Appendix B) was developed to gather information. Four of the enterprises were visited along with officials of the KOPTI. Visits were made at the time tofu production was in operation. Information was gathered by observation and by interviews with the entrepreneurs. The six enterprises had nominal processing capacities of 50, 150, 200, 225, 300, and 1,500 kg/day of soybeans. By the general definition of small scale enterprises as those having 20 or fewer employees, the last enterprise would fall in the category of medium to large scale. However, this enterprise provided valuable information to compare with those of the small scale operations. The findings of the case study are summarized in the following sections.

5.2 Buildings

The condition of buildings was related to the location. Some were in crowded urban residential areas while others were in suburban residential areas where space is available. Types of processing buildings varied from a section of the household, to open shed, to half-wall (parapet type) enclosure, to completely enclosed warehouse type facility. Unpaved cement floors were common, except for the largest processing facility which has stone slabs with grout joints. With the exception of the largest facility, none of the floors were pitched to allow for drainage. Even recently constructed facilities had extensive damage to the floor, leading to stagnant water puddles. Whitewashed brick walls without cove joints to the floors were common. Roofing was corrugated asbestos sheeting. Older facilities had poor ventilation, but more recent renovations have tended to the other extreme with open shed and half wall construction. The latter do not provide protection from rain and wind. Although the building designs are less than ideal, better sanitary practices can improve the operations in the existing facilities. The floor areas available are adequate to carry out processing at the present levels.

Two of the enterprises operate on a cooperative basis. The KOPTI owns the building as entrepreneurs process their beans using the facility and pay a fee to the KOPTI for use of the facility. One processing facility is owned by an entrepreneur who himself does not process tofu. He employs four skilled tofu makers. Processors bring their beans to the facility and

process tofu, combining their own labor with that of tofu makers provided by the owner of the facility. The processors pay a fee for use of the facility.

5.3 Utilities

5.3.1 Power and Fuel

Electricity, LP gas, diesel and firewood are used in processing operations. Electricity is used primarily for lighting, motor driven stone grinders and water pumps. In some cases, stone grinders and water pumps are driven by small diesel engines. LP gas is most commonly used for cooking soybean slurry. Two of the five enterprises covered in the case study use firewood for cookers.

Use of firewood leads to product contamination in open cooking vessels. Control of cooking temperature is difficult with open fires. Use of firewood also produces an uncomfortable work environment because of smoke and heat.

5.3.2 Water

In tofu processing, water is incorporated into the product (80-85 percent by weight) unlike many other food industries where water is used for cleansing only. Hence, water quality is an important consideration for safety and shelf life of the product.

Five of the enterprises use tube wells for their water supply. The depth of tube wells, as quoted by respondents, varied from 18 meters to 30 meters. Four of these enterprises use ground water directly in processing. One enterprise (large scale) has an in-line water softening system. Use of hard water does not present serious problems to product quality, except subtle differences in flavor. However, mineral deposits were observed at the bottom of cooking vessels. This is a direct consequence of hard water and lack of care in cleaning the equipment. Mineral deposits contaminate the product and impede heat transfer in cooking vessels.

The main concern with direct use of ground water is the microbiological quality. There was no opportunity to investigate this aspect. Enterprises should upgrade plant sanitation as a first priority and concentrate on water quality as a second priority.

5.4 Labor

According to survey respondents, laborers engaged in tofu production are full time employees. The work schedules as quoted, varied from 5 - 13 hrs/day. Small enterprises are operated entirely by family labor. Others combine family labor with outside hired labor.

There are differential wage rates depending on skills. Skilled tofu makers appear to be paid wages of approximately Rp. 12,000/day. Unskilled workers earn approximately Rp. 7,000/day. There is some variation among enterprises in the wage for similar skills. The reason may be because actual hours of work per day varied from one enterprise to another. Hired laborers are provided with resting rooms and snacks in addition to their daily wage.

5.5 Raw Material

Imported soybeans as well as locally produced soybeans are used in tofu manufacture. At the time of the study, the smaller scale enterprises were using, primarily, imported beans from the U.S. Imported food beans were of relatively larger seed size and had black hilum. By visual observation, the foreign material content was lower in the imported beans relative to local beans. Local beans were of small seed size and had black hilum. Light foreign material consisting of plant parts such as leaves and twigs as well as hulls and splits were prevalent in local beans.

Four of the six enterprises quoted KOPTI as the sole supplier of soybeans. The two larger scale operations buy local beans in the market to supplement KOPTI supplies. Entrepreneurs were satisfied with KOPTI as a soybean supplier to their operations. Small scale producers carry a very small inventory of soybeans because KOPTI is a reliable supplier. Prices quoted by the respondents for KOPTI-supplied imported soybeans varied from Rp.900/kg to Rp.990/kg. KOPTI officials indicated that they maintain a central fund for the benefit of the membership. Rp.50 from every kg of beans sold is transferred into this fund. The price of local soybeans received by entrepreneurs varied from Rp. 1000 to Rp. 1200.

There was general consensus among entrepreneurs that imported soybeans are of better quality compared to local soybeans obtained from the market. However, some entrepreneurs expressed a preference for local soybeans because of higher tofu yields. Food beans imported from the U.S. would be a mixture of different varieties delivered to local elevators. There are U.S. suppliers who export identity preserved soybean varieties suited for specific food uses such as tofu making. Several such suppliers are listed below:

Specialty Grains Incorporated, 3001 Gill Street, Bloomington, Illinois 61704, U.S.A.
Phone: 309-662-8721; Fax: 309-662-0278 (Contact Person: John Trewartha)

Clarkson Grain Corporation, P.O. Box 80, Cerro Gordo, Illinois 61819, U.S.A.
Phone: 217-763-2861; Fax: 217-763-2111 (Contact Person: Lynn Clarkson)

Pearcy Grain Services, Inc., 6149 State Route 64, Clare, Illinois 60111, U.S.A.
Phone: 815-895-8191; Fax: 815-895-4757 (Contact Person: Bob Pearcy)

Minnesota Soybean Growers Association, 360 Pierce Avenue, Suite 110, North Mankato, Minnesota 56003, U.S.A. Phone: 507-388-1635; Fax: 507-388-6751 (Contact Person: Bonnie McCarvel)

Minnesota Waxy, Affiliate of MWCG Export Co., Elevator Avenue, Hope, Minnesota 56046, U.S.A. Phone: 507-451-3316; Fax: 507-451-2910 (Contact Person: Bruce Waugh)

Nissho Iwai American Corporation, 1211 Avenue of the Americas, New York, NY 10036, U.S.A. Phone: 212-704-6844; Fax: 212-704-6838 (Contact Person: H. Kawasaki)

5.6 Chemicals

The main chemical used in tofu manufacture is the coagulant. It was found that most enterprises use acid whey as the coagulant. Sweet whey from tofu making is allowed to undergo natural fermentation. Natural micro flora bring about lactic fermentation, producing acid whey. The acid whey tanks are replenished each day with fresh sweet whey to perpetuate fermentation. The use of acid whey reduces the cost of production. However, the practice also results in acidity of residual whey which is normally disposed of without further treatment. At the least, the residual acid whey should be neutralized before discarding. If one takes into account the cost of alkali required to neutralize residual acid whey, the cost savings by coagulating with acid whey would be negated.

Acid whey is a dilute solution. A large volume of it is required to bring about coagulation of the cooked soybean extract. Because acid whey is added cold, the temperature at coagulation may drop below ideal conditions (80-85 degrees Celsius). This can adversely affect yield and texture of tofu. A further consideration is the microbiological quality of tofu. Because acid whey contains natural microflora, it is likely that the microbial load in the final product may also be higher than it would be otherwise.

Calcium sulfate is the commonly used coagulant in western countries. Nigari, a byproduct from table salt manufacture (rich in magnesium chloride), is also used in Japan. Some of the entrepreneurs used calcium sulfate to a limited extent. Calcium coagulated tofu is of better appearance and texture. This product brings a higher price than the acid coagulated tofu.

Entrepreneurs quoted the price of calcium chloride as Rp. 800/kg. A ton of soybeans processed into tofu requires about 25 kg of calcium chloride which would cost Rp.20,000. At a bean to tofu conversion rate of 1:1.5, the cost of calcium chloride per kg of tofu is approximately Rp.13.3. At the current retail price of approximately Rp.1,900/kg for tofu, the additional cost of calcium chloride is minimal.

Apart from coagulants, the other chemicals required are detergents and sanitizers. The enterprises in the case study did not use detergents or sanitizers.

5.7 Packaging

Tofu is transported in bulk. Packaging of tofu in unit packs is virtually nonexistent. At the processing plant, tofu is packed in metal cans or plastic tubs without covers. Tofu is transported in open containers. Traditional markets retail tofu in bulk. At the supermarket, it was found that tofu was re-packed in flexible plastic bags. Bulk packs of tofu should be covered during transport. Packaging of tofu at the production point should be considered in upgrading the industry.

In Japan and in western countries, tofu is retailed in unit packs. In some cases, individual slabs of tofu are packed in flexible plastic bags in a medium of water and sealed. More commonly, tofu slabs are packed in plastic tubs, filled with fresh water and the top is covered with printed plastic film which is heat-sealed in semi-automatic packaging machines. The use of fresh water as a covering medium retains freshness of tofu. Individually packed tofu is handled under refrigeration. Under these conditions, tofu has a shelf life of 7-10 days.

5.8 Equipment and Accessories

5.8.1 Cleaning

Soybeans as received at the factory are directly used in processing, without regard to foreign material. As a result, it was found that light foreign material such as plant parts were floating in soaking tanks. Foreign material in soybeans is a source of microbial contamination. If foreign material is not removed before soaking, high microbial loads are incorporated at the beginning of the process. Other factors being constant, a high microbial load at the beginning of the process results in carry over of high microbial loads into the finished product. Therefore, removing foreign material by dry cleaning will contribute to better shelf life of the product.

5.8.2 Soaking

Beans are soaked in rigid plastic buckets, wooden casks, or cement tanks. At the end of the soaking period, floating foreign matter is removed by hand. In some cases, the beans are transferred into bamboo/cane colanders and rinsed in tubs of water.

The same rinse water is used for successive batches. Although this practice saves water, rinsing in running water or changing rinse water at frequent intervals is necessary to clean beans before they are milled.

5.8.3 Grinding

Wet-grinding is carried out in conventional stone mills. These are vertical plate grinders with one moving member and one stationary member. The plates are of stone with serrated contact surfaces. These mills are quite common in Japan and in China. However, the more sanitary designs have grinding plates with carborundum facing on the product contact surfaces.

Some enterprises kept the grinders fairly well cleaned. Others did not clean the mills. Layers of bean residue had built up on the outside of mill housings. It was apparent that mills had not been opened for cleaning in a long time. It was also noticed that mills were left uncleaned between one batch and another in cooperative operations where several entrepreneurs used the equipment. Residue of bean slurry from the previous batch was left in mills without rinsing. This material gets incorporated into the next batch. This leads to build-up of microbial loads and cross contamination of successive batches.

5.8.4 Cooking

Four types of cooking devices were observed in the case study. The first was a 55-gallon drum over a wood fired hearth. The outside of the drum was covered with a layer of soot and residues from overflowing foam while cooking the bean slurry. Contamination of the product with soot is unavoidable. This is an unsanitary cooking device.

The most common cooking vessel is the bowl shaped cement tank with a dished bottom of cast iron which allows heat transfer. These are fired by gas or wood. The main problem is that it is a permanently fixed device without a drain port. Cleaning is done by rinsing the

inside and dishing out rinse water. Proper cleaning is quite difficult without a drain port. This is apparent from the build-up of deposits inside the vessel.

The third cooking device is an improvement over the cement tank. In this case, the inside of the cement tank is completely lined with metal. This is a more sanitary device. The problem of cleaning still remains because the metal lining is permanently fixed inside the cement tank and there is no drain port.

The fourth type of cooking vessel is the steam injection cooker. This is a cylindrical upright metal tank with a dished bottom. The tank is mounted above ground level. A drain port at the bottom allows cleaning. Heating is by sparging live steam into the bean slurry. This method of cooking is rapid and also avoids scorching which is a problem with wood fired and gas fired devices. This device was used in the largest enterprise processing 1.5 tons of beans a day. Steam injection cookers are standard with small scale Japanese tofu processing systems.

5.8.5 Separation

After cooking the bean slurry, the next step is separating the residue and soymilk. A conical filter frame made of bamboo/cane is placed on a wooden cask. The frame is lined with a fine filter cloth and the hot bean slurry is transferred into the filter cone. Filtration is facilitated by stirring the slurry with a ladle or by moving the flaps of the filter cloth from side to side. The residue is lifted off with the filter cloth and soymilk is collected in the wooden cask.

From a sanitary standpoint, the filter cone and filter cloth can be maintained in a clean manner. However, there are two problems with this system. The batch size is limited by the capacity of the filter cone. Hence, many small batches must be worked to produce the desired output. This limits the productivity of the overall operation. Second, the residue is quite wet and contains some soymilk that can be extracted by a better system. This affects the yield of tofu that can be obtained.

Japanese tofu operations commonly use a continuous roller extractor. This allows working with large batches in the preceding cooking operation and hence, increases production efficiency. Extraction is by a two-stage process which gives higher yields of soymilk and relatively dry residue which is easy to handle.

5.8.6 Curding

In this step of the process, a coagulant is added to the hot extract of soymilk to produce protein curd.

The common practice observed in the case study is the use of acid whey as described under 5.6. Use of calcium sulfate will produce a better product and eliminate the problem of acidity in the residual whey.

5.8.7 Pressing

This step in the process separates the whey and converts loose protein curd into tofu with the desired texture. A colander is placed on the surface of the curd and free whey collecting in

the colander is ladled out. The curd is then filled into wooden forming boxes lined with filter cloth. The cloth is folded over and the forming boxes are taken to pressing.

Some enterprises stack forming boxes and allow pressing to take place under their own weight. In other cases, containers filled with water are placed over the stack to hasten pressing. Pieces of H-Iron were also used as weights.

In modern tofu operations, standard size forming boxes are made of stainless steel. Pressing is done using rachet type presses or pneumatic presses where pressure can be controlled within close tolerance. Such systems greatly reduce the variation in texture of tofu from day to day.

After pressing, tofu slabs are separated, cut into pieces and packed into plastic or metal containers for transport in bulk. Tofu is still warm at this stage and would stay warm for a long period. This will reduce the shelf life because microbial growth can set in under warm conditions during transport. Tofu should be steeped in cold water to reach room temperature before packing.

5.8.8 Sanitation and Waste Management

The immediate vicinity of enterprises is not maintained in a way that will promote sanitation in the processing plant. Muddy and dirty exteriors promote dust and dirt within buildings, brought in by wind, rain and feet of workers moving in and out of the plant. In one case, free range chickens were seen to move freely within the building.

Sanitation levels in all processing buildings visited need much improvement. The floors of buildings showed extensive damage by stagnant water puddles that will not drain out.

Most buildings had poor drainage from the flow because floors are flat. In older establishments, floors were quite slippery due to build-up of wet soybean residues. Floors are not scrubbed and cleaned. No cleaning aids such as brushes, brooms or water hoses were available. Some buildings were completely open sheds while others were highly enclosed without much ventilation or lighting.

Equipment was maintained well in some plants but not in others. It appeared that regular cleaning of equipment such as mills, cookers, pressing tables, and containers was not carried out. Empty containers were standing upright with water stagnating at the bottom. They would be better maintained by turning them over when not in use. Unused equipment and utensils were stacked on processing floors in wet conditions, taking up valuable space that could be used to create a more convenient working environment.

In many cases, motor driven equipment did not have belt guards.

Personnel hygiene could also be improved. Workers were not provided with any protective clothing, boots or gloves. Most workers were working bare footed. Some male workers did not wear shirts. These practices are not only unhygienic but also unsafe for the workers. General practice of washing hands when coming to the processing floor from outside was not observed.

Four of the six plants in the case study disposed of liquid waste directly into municipal sewer systems or open waterways. Two enterprises are making attempts to stabilize liquid waste. Enterprises located in crowded urban dwelling areas have no space to carry out waste management practices.

5.9 Costs and Returns

The limited scope of the case study does not allow a detailed analysis of costs and returns. Information obtained from the enterprises visited was used to make empirical calculations on costs and returns. Values for cost of depreciation of buildings and equipment could not be accurately determined. Processors using Koperasi owned factories are charged a fixed rate based on the amount of beans processed. These figures were used as approximations for depreciation. The largest enterprise in the case study falls under the category of medium to large scale industry. This facility has a much larger investment in plant and equipment. It also has a distribution system with six mini-trucks.

The plant and building was valued at US$100,000 and depreciated out over 15 years. The vehicles were depreciated out over 5 years. Information for interest on borrowed capital was not available, and hence, disregarded.

Table 1 shows the breakdown of inputs, value of outputs and value added addition. The value added ratios are in the range of 45 percent. Labor's share of value added ranged from 45 percent to 28 percent for small scale enterprises. These values decreased with increasing processing capacity. For large enterprise, labor's share of value added was 14.6 percent. This figure may not be reliable because complete information was not available. Table 2 shows breakdown of cost of production.

Table 3 shows that even small enterprises receive a reasonable gross margin. Of particular significance is that enterprise No. 2 processing fried tofu from 150 kg of beans per day received a larger gross margin than enterprise No. 3 processing fresh tofu from 200 kg of beans per day. The major cost element in tofu processing is the cost of soybeans. The cost of soybeans is over 50 percent of the total cost of production for all enterprises (Table 4). This figure increased from 52 percent for the smallest enterprise to 66.7 percent for the largest enterprise. In comparison, the labor cost varied from 17.8 percent to 24.8 percent for the small scale enterprises. There was no apparent relationship to the scale of operation.

A study conducted in 1987 reported that the cost of soybeans and tofu were Rp.585 and Rp.750 respectively. At the present time, corresponding figures are Rp.900 and Rp.1,900. Soybean prices have increased by 53 percent and tofu costs have increased by 150 percent over 1988 levels.

6. Potential for Improvement

6.1 Buildings and Utilities

New construction must be in areas having ample space for access to vehicles. The area surrounding processing facilities must be kept clean without stagnant water, dirt, refuse piles etc. Roads and paths leading to the plant must be paved to reduce contamination of the facility with dust and dirt by persons moving in and out of the plant.

Table 1 : Value Addition by Tofu Processing at Various Processing Capacities

Enter-prise Number	Processing Cap./Day Kg	Cost of Beans/Day Rp. (A)	Other Current Inputs/Day Rp. (B)	Labor Cost/Day Rp. (C)	Value of Tofu/Day Rp. (D)	Value Added Rp. D - A - B (E)	Value Added Ratio (E/D)	Labor's Share of Value Added (C/E)
1	50	42,500	18,175	20,000	105,000	44,325	42.2%	45.1%
2	150	142,500	79,750	48,000	400,000	177,750	44.4%	27.0%
3	200	170,000	40,000	82,000	404,000	194,000	48.0%	42.3%
4	300	270,000	49,241	84,000	600,000	280,759	46.8%	29.9%
5	325	300,625	82,465	84,000	682,000	298,910	43.8%	28.1%
6	1,500	1,485,000	505,500	235,000	3,600,000	1,609,500	44.7%	14.6%

Table 2 : Estimated Daily Cost of Production for Tofu Enterprises

Enter-prise Number	Processing Capacity Kg	Cost of Beans Rp.	Cost of Labor Rp.	Cost of Power Rp.	Plant Rental/ Depreciation Rp.	Packaging, Additives and Distribution Rp.	Total Cost of Production Rp.
1	50	42,500	20,000	10,977	2,333	4,865	80,675
2	150	142,500	48,000	18,500	11,250	50,000*	270,250
3	200	170,000	82,000	25,000	15,000		292,000
4	300	270,000	84,000	41,666	7,575		403,241
5	325	300,625	84,000	58,090	24,375		467,090
6	1,500	1,485,000	235,000	186,000	112,500	207,000**	2,225,500

* This enterprise produces fried tofu. Hence, they incur significant expense for frying oil.

** This enterprise has its fleet of trucks for transport of tofu to markets.

Table 3: Daily Costs and Returns for Tofu Enterprises

Enterprise Number	Beans Processed Kg	Cost of Production Rp.	Value of Sales Rp.	Gross Margin Rp.
1	50	80,675	105,000	24,325
2	150	270,250	400,000	129,750 *
3	200	292,000	404,000	112,000
4	300	403,241	600,000	196,759
5	325	467,090	682,000	214,910
6	1,500	2,225,500	3,600,000	1,374,500

* This enterprise produces fried tofu having higher unit value than fresh tofu.

Table 4: Analysis of Tofu Production Cost with Respect to Scale of Operation

Enterprise Number	Scale of Operation Kg beans/day	Bean Cost as % of Total COP	Labor Cost as % of Total COP	Power Cost as % of Total COP
1	50	52.7%	24.8%	13.6%
2	150	52.7%	17.8%	6.9%
3	200	58.2%	28.1%	8.6%
4	300	66.9%	20.8%	10.3%
5	325	64.4%	17.9%	12.4%
6	1,500	66.7%	10.6%	8.4%

NOTE : COP is Cost of Production

Building floors must be pitched in one or more directions to allow drainage of water. The pitch must be approximately 1 mm/m and drains should be approximately six meters apart. Floors must be resistant to hot water and provide a non-skid surface. Clay tile, brushed concrete or granite blocks may be used. Grout joints must be smooth. Drains should be provided with settling traps to retain solid particles flowing out with wash water. They must be cleaned out at frequent intervals. The floor and wall juncture must be curved for easy cleaning.

Walls must be painted with water resistant paint. Ideally, the inside of walls in the processing area should be lined with glazed tile or other non-porous material, up to a height of 1.5 meters. At least two large access doors must be provided to the building. Windows must be provided with fly-proof window screens. Ample natural light will cut down electricity costs for lighting purposes. The clearance from floor to eaves should be no less than 3.5 meters.

All steam pipes should installed against the walls and lagged with suitable insulation. Several ports should be provided along the length of the building to connect water hoses for cleaning the plant and equipment.

6.2 Raw Materials

The quality of soybeans considered satisfactory for crushing is not necessarily adequate for tofu processing. Soybeans should be cleaned dry before soaking, when the foreign material content is substantial. In the case study, it was observed that local soybean supplies had a high content of foreign material. Whether soybeans could be cleaned at the KOPTI level or at the processor level must be investigated. Processors can use a simple screening device such as a coarse knit colander to remove heavy foreign material. Light foreign material is easily removed by classification using manual means.

Some processors perceive that imported soybeans give lesser yields of tofu compared with local beans. IRDABI should investigate this matter and determine if there is a difference in yields. If this is proven to be so, special varieties suited for tofu making may be imported from U.S. sources. A partial list of suppliers is given under section 5.5.

6.3 Equipment

Local stone grinders are acceptable if they are consistently cleaned. Grinders with carborundum facing on product contact surfaces should be considered in upgrading equipment.

Cooking in 55-gallon drums over wood fires should be discouraged for reasons of sanitation and product quality. Locally constructed cookers with cement tanks and dished metal bottoms should be upgraded by lining the entire inside surface with stainless steel. Use of direct steam injection cooking should be encouraged in new enterprises.

In new enterprises designed to operate at high capacity, the existing method of separating residue with the filter cone should be replaced with the roller type extractor described under section 9.

Tofu of consistent texture can be produced by standardizing the pressing procedure. New enterprises should consider mechanical pressing devices such as described in section 9.

6.4 Processing

Use of calcium chloride as a coagulant will produce tofu of better quality compared to acid coagulated tofu. The use of calcium chloride should be encouraged.

6.5 Packaging

Tofu should be cooled to room temperature in fresh water before packaging in bulk. Bulk containers must be covered during transport.

6.6 Sanitation

Improvements in plant sanitation must be the first priority in upgrading the industry. The processing floor should be maintained in a clean manner by washing and scrubbing at the end of the production cycle.

Equipment should be cleaned soon after use. Stone mills should be opened and rinsed free of residue between production cycles and at the end of the day. Utensils should be cleaned and turned over on drain racks which are easily turned out of wood. Stacking of utensils on the wet floor should be avoided.

Improved worker hygiene will protect workers and help improve the quality of product. Workers should be encouraged to wear protective foot wear and reasonable attire. Use of hair bands and gloves should be encouraged. Personal habits such as eating and smoking during the production run should be discouraged. Washing of hands before coming into the production line should be strongly encouraged.

Most of the interventions necessary to improve plant hygiene can be achieved with little or no cost. The primary need is for a change of attitude which can come about by a process of education. Although an industry-wide program for worker education would be a formidable task, a start can be made with a pilot project as discussed in section 7.

6.7 Waste Management

Waste management programs at the level of each small enterprise may not be feasible. Because small enterprises are many and scattered, consolidation of waste from many enterprises pose practical difficulties. Consolidation of waste and centralized waste management would be feasible under the current projects for relocating tofu producers.

Several options are available for treatment of domestic, agricultural and food industry waste. Land application, biological stabilization and disposal, Biogas production, algae production, fish production, and integrated waste management systems are used depending on the nature and quantity of waste.

The solid waste from tofu is utilized for livestock feed, or processing of témpé and ontjom. Approximately half the protein in soybeans is retained in the residue. Tofu made from good quality soybeans is nutritious and can be used in other food products. IRDABI is already recommending ways to utilize solid waste in food products for domestic use.

Liquid waste treatment should include neutralization of whey. Two stabilization systems were observed in the case study. One was dependent on anaerobic treatment. The other was dependent on aerobic treatment. Neither was working well. Sequential anaerobic and aerobic treatment of liquid waste should be investigated.

7. Recommendations to Improve Existing Conditions

Historically, small scale tofu industry has developed into, and stabilized at, a subsistence level. This industry serves the domestic market. The consumer accepts the product in its present form, despite the many deficiencies that can be readily seen in processing the product and its quality. No competing products of better quality are on the market. Hence, the producer does not feel pressure from the consumer to bring about voluntarily change.

Another mitigating factor is the difficulty of reaching the large number of small enterprises to bring about change. Yet, creating awareness of the need for change is the most urgent and effective means for intervention. Introduction of improved processing equipment and technologies will not be effective unless it is accompanied by good manufacturing practices.

Three strategies and corresponding action plans are recommended to improve the tofu industry:

1. Promote the application of good manufacturing practices
2. Improve existing equipment
3. Introduce appropriate improved processing technology

7.1 To Promote Application of Good Manufacturing Practices

The status of the industry can be considerably improved by creating awareness and promoting the application of good manufacturing practices. However, given the large number of small scale processors involved, this must necessarily be a long term process. For the same reason, the limited number of MOI extension staff (Penilik Perindustrian) is inadequate to directly reach every enterprise. Therefore, it is necessary to seek direct participation of industry leadership in the process of creating awareness to bring about positive change.

7.1.1 Organizational Structure and Scope

Tofu producers are organized under the umbrella of the Cooperatives of Tofu and Témpé Producers (KOPTI). Therefore, KOPTI may be used as a link to involve the industry in the process of creating awareness and bringing about change.

A five-tier organizational structure (Figure 1) is suggested for the technology transfer process. The project should be undertaken by the MOI, using its extension staff (Penilik Perindustrian), IRDABI and KOPTI.

For purposes of implementation, it is suggested that a pilot project should be undertaken in a selected KOPTI area.

The objective of the pilot project is to transfer technology to improve the current status of manufacturing practices. For the purpose of the pilot project, a KOPTI area should be selected in discussion with officials (during the case study, the KOPTI officials indicated interest in development of the industry). MOI should use KOPTI as the primary contact point for the technology transfer process. KOPTI should select few of its more progressive tofu entrepreneurs as leaders for the program. They should be included from the planning stage and serve as conduits for the flow of knowledge and information to the membership.

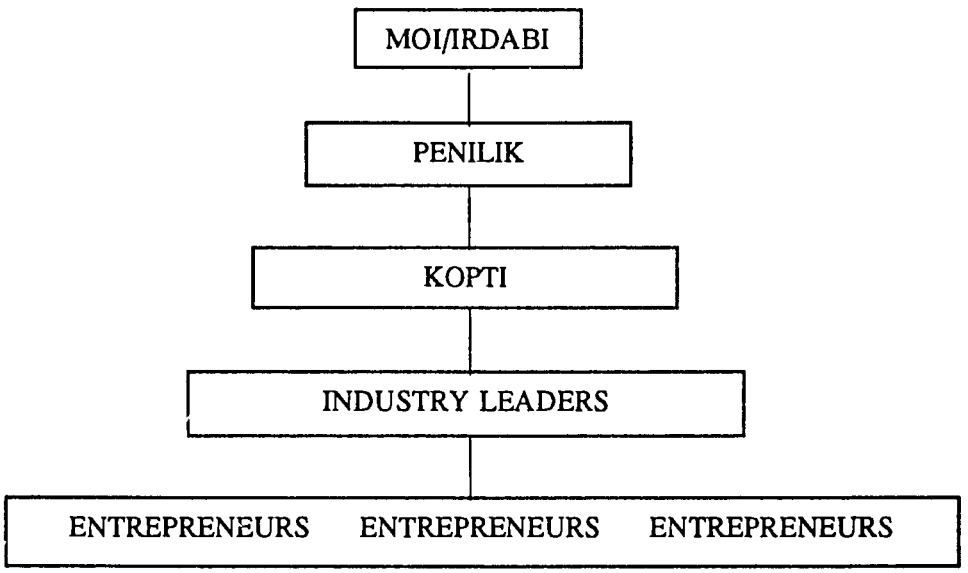

Figure 1: Organizational structure for technology transfer.

7.1.2 Implementation

a. MOI/IRDABI should develop a simple document relating to the need for changes in the industry and present deficiencies and action required to improve the situation. Sections of this report relating to the findings (section 5) and the recommendations for improvement (section 6) will provide background material for this purpose. MOI's previous publications on CGMPs will also be very useful. The document should cover clean processing environment, proper cleaning and maintenance of equipment, safe handling of product, and worker hygiene. The document should relate to the current situation in the tofu industry and should be in a language that a non-technical person can comprehend. It must suggest improved practices, along with the underlying reasons.

b. The document prepared in 7.1.2 (a) should be discussed with selected leaders of the KOPTI membership. They will provide valuable inputs from the industry side regarding the feasibility of implementing proposed changes. The document may be revised as a result of dialog, so that the leaders will be comfortable in taking it to producers.

c. The Penilik Perindustrian and selected industry leaders should be trained by IRDABI in the implementation of recommendations contained in the document. This should be accomplished through discussion as well as by implementation in the tofu operations of industry leaders in the first instance. During this phase of the program, Penilik and KOPTI officials should play an active role. Once IRDABI is satisfied with the trained Penilik Perindustrian and the industry leaders, much of the burden of technology transfer may be passed on to this trained group which should serve as trainers.

d. The industry leaders should be given some credibility to serve as extension agents for the project. This may be done by recognizing and appointing them to leadership positions at regular meetings of KOPTI members. They should be encouraged to implement recommended practices in their own enterprises. MOI should provide some funds for leaders to effect minor renovations to their processing facilities. These tofu operations would serve as examples and demonstration centers.

e. The leaders, along with Penilik Perindustrian, should develop a dialog with tofu processors in their communities and serve as extension agents. While industry leaders can be effective agents for change, their time and efforts must be compensated. Necessary communication aids to guide community level discussions and an honorarium to cover their time and transport may be considered. KOPTI officials should support the leaders by helping in scheduling community meetings, discussing progress of the project at general meetings of the members, and by their presence at community level meetings.

7.1.3 Recognition of Innovators

The entrepreneurs that respond to the program and bring about positive changes in their processing operations should be recognized. MOI/IRDABI/KOPTI should set norms to evaluate changes that are made by entrepreneurs. These should involve changes to buildings, better equipment and improved manufacturing practices. Those enterprises that reach the mark should be recognized by a seal of approval, certificate of excellence or other appropriate means.

7.1.4 Teaching by Example

Enterprises that improve their operations should be used as centers which other entrepreneurs may visit. Such visits should be organized by the Penilik Perindustrian and industry leaders under the auspices of the KOPTI.

7.1.5 Publicity

Mass media should be used to focus attention of processors and the general public on the need for change in the tofu industry. The pilot project should be publicized through print media and local radio. Project activities stated in this section and the status of progress could be publicized by newspaper articles. If radio time is available, MOI/IRDABI/KOPTI/ and industry leaders could hold forums to focus on specific activities of the pilot project. Entrepreneurs who improve their operations in response to the project effort may also be featured in these programs.

7.1.6 Expected Impact

As the process of change begins to take place at some enterprises, there would develop a multiplier effect whereby, more entrepreneurs would embrace the concepts voluntarily.

Furthermore, those that improve their practices would create a competitive environment due to the new visibility of their facilities and recognition. Once the pilot project is field tested in one KOPTI area, the concept may be extended to other KOPTI areas.

7.2 Improving Existing Equipment

7.2.1 Educating Manufacturers

The equipment manufacturing sector should be informed of improvements that will make their equipment more functional and sanitary in construction. It is recommended that an information bulletin should be prepared by MOI/IRDABI as a guide on sanitary construction for use by equipment manufacturers. This should contain basic guidelines in the CGMP with regard to sanitary equipment. It should also include immediate changes that can be made to tofu equipment so that they will become more sanitary, efficient and safe. Following are areas for immediate focus.

7.2.2 Cooking Vessels

Re-design cooking vessels that consist of cement bowls with dished bottom of metal. Metal bowls (preferably of stainless steel) should be manufactured to fit in the cement structure so that the product does not come in contact with cement.

7.2.3 Grinders

The current designs of grinders have product contact parts made of stone. These have high wear and tear. If plates can be faced with carborundum, they will be more durable and more sanitary.

7.2.4 Belt and Chain Drives

All belt drives on grinders, pumps and other equipment should be provided with protective guards. Motors should preferably be of the totally enclosed fan cooled (TEFC) type. This will protect the motor from water as well as enable workers to clean machines without fear of wetting motors.

7.2.5 Equipment to be Discouraged

The use of 55-gallon drums as cooking vessels and cooking over wood fire should be discouraged. The vessel builds up soot which contaminates the product. Cooking temperatures are hard to control and product overflows. Barrels are also hard to handle and clean. The use of improved metal containers (section 7.2.2) and cooking with gas should be encouraged.

8. Recommendations for Introduction of New Technology

One or more improved tofu processing systems should be established as models for upgrading existing processing technology. These should operate as commercial facilities, while at the same time, serving as centers for demonstration to processors. The improved systems should be housed in well designed buildings. Basic requirements for sanitary design of buildings are given in section 6.1.

Three models are suggested. These modern systems provide for upgrading existing grinding, cooking and separation functions which form the heart of the tofu processing system. These systems are modular units that use cooking by direct steam injection instead of direct fired systems currently in practice. This provides for simplified and sanitary operations leading to better product quality.

The first model is a small system suited for small cottage scale operations. The proposed unit will process approximately 22.5 kg of tofu per hour, operating on a continuous basis. Grinding, cooking and separation functions are performed by the system. The rest of the operations will be carried out using local equipment. Tofu will be marketed in bulk according to current practice in Indonesia.

The second model will process approximately 100 kg of tofu per hour, operating on a continuous basis. The grinding, cooking, and separating functions are performed by the system. The rest of the operations will be carried out by using local equipment. Tofu will be marketed in bulk according to current practice in Indonesia.

The third model is a further upgrade from the second model. It is designed to produce packaged tofu. This model represents modern small scale tofu processing technology, typical of the Japanese tofu industry.

This model includes all equipment in the first model, and in addition, equipment for packaging and refrigeration.

The first model includes a LP-Gas fired steam generator. The second and third models should be supplied with a boiler from local sources.

It is pointed out that packaging will add to the cost of production. At the present time, information on market potential of packaged tofu is not available. The additional investment in packaging equipment will provide the opportunity to produce packaged tofu and to study the market potential of packaged tofu.

In the first instance, packaging material (plastic tubs and lid film) will have to be imported along with the equipment. The capability for local production of containers should be investigated for the longer term.

8.1 Model 1

8.1.1 Equipment Profile

This model has been developed in response to the need of developing countries to satisfy the requirements of cottage scale industries. It is manufactured by ProSoya Foods International, Inc., 9 Veery Lane, Ottawa, Ontario K1J 8X4, Canada, Phone: 613-745-9115, Fax: 613-744-3548.

Technical Description

This system is designated SOYACOW. It consists of a patented pressure vessel with a two stage grinder which grinds soaked soybeans in a relatively air-free environment. The pressure vessel is heated by direct steam injection so that grinding and cooking takes place in the same vessel. Steam is supplied by a LP gas heated steam generator. The cooked slurry is filtered by a mechanical press designed for the capacity of the grinder-cooker.

This model is quite versatile because more than one grinder-cooker unit can be coupled by having one steam generator of the required capacity. It is proposed that a twin unit should be introduced as a model for field testing for the cottage scale. Pictorial illustrations of the grinder-cooker, mechanical press and the steam generator are given in Appendix C-1, C-2 and C-3.

8.1.2 Estimated Cost (FOB, Canadian Port)

This is a small modular unit that is recommended for field testing in a MOI research facility. It is a unit that will fit the needs of cottage scale. Therefore, only the cost of the system is indicated.

Estimated Cost: SoyaCow Twin Module (FOB Canadian Port)

	ESTIMATED COST (Rp. 1,000)
SoyaCow System GC-20S: Module of two grinder-cookers, two presses, one steam generator, and accessories	Rp. 33,000

8.1.3 Plant Layout

The proposed plant layout is given in Appendix C-4.

8.1.4 Operation and Management

The SoyaCow system should be installed in a MOI research facility and field tested under Indonesian conditions. The unit must be maintained by MOI as a demonstration unit for entrepreneurs. If the model is accepted by small scale processors, it should be promoted for small entrepreneurs.

The SoyaCow system is covered by patents. The equipment is currently being manufactured in India under licensing arrangements with the manufacturer. If the model unit becomes accepted by processors, MOI may negotiate with the manufacturer for similar arrangements to manufacture the equipment in Indonesia.

8.2 Model 2

8.2.1 Equipment Profile

This model fits the needs of relatively larger operations. In order to upgrade grinding, cooking and extraction functions for a small commercial tofu operation, it is proposed to introduce a modular unit, typical of the small scale tofu processing industry in Japan.

The proposed unit is manufactured by: Takai Tofu and Soymilk Equipment Company, 1-1 Inari, Nonoichi-machi, Ishikawa-ken 921 Japan, Phone: 0762-48-1355, Fax: 0762-48-5457. Agent in the U.S.A.: Bar North America, Inc., 205 South Main Street, P.O. Box 190, Seymour, Illinois 61875, Phone: 217-687-4810, Fax: 217-687-4830.

Technical Description:

This module is designated as Takai Subsystem S60A (S). It consists of a wet grinder, slurry tank, steam injected pressure cooker and a roller extractor. The soaked soybeans are milled in the grinder and discharge collects in the slurry tank, heated by steam injection through a steam coil at the bottom. The pressure cooker is vented with live steam to displace air. The steam valve is closed and the valve of slurry tank is opened. The slurry is sucked into the pressure cooker due to a vacuum created by condensing steam. The valve is then closed and the slurry is cooked by steam injection. The cooking cycle in the pressure cooker is six minutes. The cooked slurry is then pumped into the roller extractor. The slurry is filtered by a rotating cylindrical screen and residue passes into a second extraction by pressing between a rotating perforated drum and a hard rubber roll. The residue is discharged into a removable tray.

Description of the Components

a) a double-disc wet grinder with stainless steel hopper, mild steel housing and grinding plates having carborundum facing
b) stainless steel slurry tank mounted under the discharge port of the wet grinder, provided with bottom coil for steam sparging
c) pressure cooker with steam injection, including sanitary piping and valves for connection to slurry tank
d) continuous roller extractor provided with two-stage extraction capability, including motor, starter and interconnecting piping for connection to the pressure cooker, all steel construction

A complete catalog of equipment from Takai Tofu & Soymilk Equipment Company, including the subsystem S60AS is enclosed with the report.

After soymilk is discharged from the extractor, subsequent operations (curding, pressing, cooling, cutting and packaging) will be done with locally available equipment.

The following equipment will be from local sources:

a) rigid plastic soaking tanks (3 units)

b) wooden curding barrels (6 units)

c) wooden forming boxes (30 units)

d) wooden pressing tables (two units)

e) bulk packing containers with lids, filter cloth, knives, ladles, steam generator/boiler rated at 15 horse power (boiler to be provided with water softener, depending on water quality at the selected location)

8.2.2 Estimated Costs: Imports FOB Japanese Port

	ESTIMATED COSTS (Rp. 1,000)
Building	36,300
Automatic Pressure Cooker System S60A(S)	150,700
Local Accessories	4,400
Curding and Pressing Unit	-
Packaging Machine	-
Walk-in Cooler	-
Boiler	33,000
Total	Rp. 224,400

8.2.3 Plant Layout

Appendix D presents the proposed plant layout for Model 2.

8.2.4 Operation and Management

This model should be operated as a Common Service Facility or as a cooperative enterprise (KUB). MOI should consider full investment in the first unit.

IRDABI should provide technical inputs into planning, installation, commissioning and training of personnel. IRDABI should provide technical oversight for operation of the factory on a

continuing basis. It should also use the facility for demonstration and applied research. The KUB should be accountable to MOI for proper maintenance of the factory.

If requested, this consultant will provide technical assistance services that may be required for installation, commissioning and training of personnel.

Continued operation of the factory should be on a cooperative basis (KUB) where entrepreneurs use the facility to process their own beans. MOI must employ trained personnel (three skilled tofu makers per shift, plus boiler operator) to ensure proper operation and maintenance of the facility. The processors should be charged for use of the facility, based on the weight of beans processed.

8.3 Model 3

8.3.1 Equipment Profile

This model is a further upgrade of Model 2 and will be from the same source (Takai Tofu & Soymilk Equipment company). In addition to the Subsystem S60A(S) described in 8.2.1, this system will include all the equipment required to curdle, press, cut, cool, package and refrigerate tofu.

The added subsystem is designated S60S. The packaging machine is designated HS-KYO-720. The complete catalog from Takai Tofu & Soymilk Equipment company is enclosed with the report.

The walk-in cooler is from Master-Bilt Products, Highway 15N, New Albany, Mississippi 38652, Phone: 601-534-9061, Fax: 601-534-6049. The suggested model is designated CM-156-75 for the cooler and CM-33-01425 for shelving. The capacity is 7.4 cubic meters. A copy of the Master-Bilt Catalog is enclosed with the report.

The following equipment will be from external sources.

a) a double-disc wet grinder with stainless steel hopper, mild steel housing and grinding plates having carborundum facing

b) stainless steel slurry tank mounted under the discharge port of the wet grinder, provided with bottom coil for steam sparging

c) pressure cooker with steam injection, including sanitary piping and valves for connection to slurry tank

d) continuous roller extractor, provided with two-stage extraction capability, all steel construction

e) stainless steel curding barrels with support platforms on casters

f) mixing plates (2 units)

g) dippers (2 units)

h) pneumatic pressing unit with three pressing ports, steel top pressing table and air compressor

i) stainless steel forming boxes (10 units), stainless steel tofu cooling tanks (two units)

j) tofu cutting knives (2 units), semi-automatic tofu packaging machine capable of sealing 650 packages per hour

k) tofu packaging containers (25,000 units)

The following equipment will be from local sources.

a) rigid plastic soaking tanks

b) boiler rated at 15 HP (boiler to be provided with water softener, depending on water quality at the selected location)

8.3.2 Estimated Cost: Imports FOB Japanese/U.S. Port

	ESTIMATED COSTS (Rp. 1,000)
Building	36,300
Automatic Pressure Cooker System	150,700
Local Accessories	2,200
Curding and Pressing Unit	128,700
Packaging Machine	20,460
Walk-in cooler (CM-156-75)	18,260
Boiler	33,000
Total	Rp. 389,620

8.3.3 Plant Layout

Appendix E presents the plant layout for Model 3.

8.3.4 Operation and Management

The same procedures for operation and management of Model 1 (8.1.4) would apply to Model 2. However, IRDABI should play a greater role in the operation of this model. It is not envisaged that full scale production of packaged tofu will take place in the beginning. The packaging capability should be used by IRDABI to carry out market research (see section 9) and for promotion of packaged tofu. Commercial production of tofu for marketing in bulk can be carried out (bypassing the packaging process) from the inception, on the cooperative (KUB) basis.

9. Recommendations for Research and Development

The following aspects should be considered for Research and Development.

- Comparative evaluation of locally grown soybeans and imported soybeans for performance in yield and quality of tofu. Results of this work will provide a basis to consider whether specialty varieties of soybeans suited for tofu should be imported (see section 5.5).

- Market demand for calcium-coagulated tofu and the market potential for packaged tofu. This work will help provide guidelines to the tofu industry in upgrading production technology (see section 5.6).

- Comparative evaluation of acid-coagulated and calcium-coagulated tofu for their physical, chemical, microbiological, and sensory properties. This work should be related to tofu produced by small scale industry. This work will be useful for the industry to select the appropriate coagulant (see section 5.6).

- Stabilization of tofu whey. This could be a joint project between IRDABI and Balai Besar Industri Kimia. It may be undertaken as a part of the establishment of model processing plants (see section 8).

APPENDIX A

Activity Name: D.1.1.2. Tofu Industry
Program Area: D.1. Processed Foods

Terms of Reference (TOR)

Composed By: Yadi Suriadinata **Date:** 05/26/95 12:25 PM
Last Edited By: Tanya Torres **Date:** 07/28/95 11:19 AM

TERMS OF REFERENCE: **STATUS:** Final

TECHNICAL ASSISTANCE TO THE TOFU INDUSTRY

I. Background

Tofu is one of the most important foods in Indonesia. Tofu has good prospects to be developed further, not only because it is a relatively cheap food, but also because it is a highly nutritious one. Tofu processing is one of the most important small scale industries in Indonesia because of the following:

1. There are about 25,000 small scale tofu industries in Indonesia with total capacity of about 560,000 MT per year, that is to say, each factory on an average produces about 75 kg of tofu per day.

2. Tofu is a traditional food in Indonesia and is low in cholesterol and has a high nutritional value.

3. There are a large number of families supported by additional local involvement in all aspects of processing and marketing the product.

It is generally acknowledged that the tofu quality produced by the traditional processing systems could be and should be improved. The main reasons are:

1. There is insufficient attention paid to the sanitation practices of factory, machinery and equipment.

2. The layout of the factory is inefficient, especially with respect to water usage and waste water disposal.

3. In general, there is no water treatment or other waste treatments before disposal.

4. The traditional producers do not have access to new technical knowledge and skills and, as a result, the final product is often of low quality.

As a result of these points, the productivity in the Indonesian tofu industry is very low. Typically losses of 30% can be expected. Furthermore, while the tofu industry is small, it is nevertheless, an

important contributor to the economy and is currently facing quality problems. To overcome these constraints and to establish a strategy for the development of the industry, the Directorate General of Agro Industry has requested technical assistance (TA) from the Agribusiness Development Project to determine the necessary important steps for the development of the industry.

II. Objectives of the Assignment

The purpose of this assignment is to respond to the requests to the ADP from the DG-IHP to provide technical assistance in preparing an industry development strategy for Indonesia, using one province as an example and case study. The assignment would consider, but not be limited to, commenting on the following:

1. Better and cleaner tofu processing methods
2. Package and packaging techniques to improve tofu shelf life
3. Methods of improving tofu quality
4. Methods of improving tofu factory processing lay-out design, waste management and treatment
5. Design an appropriate technology for small scale tofu processing industry
6. Improving sanitary aspects of tofu processing
7. Design a working model, identifying and documenting both appropriate technical and organizational priorities that could be used in a cooperative venture for tofu processing at village level (Koperasi Usaha Bersama)

III. Technical Assistance (TA)

The tofu processing expert will be responsible for:

1. Identifying the major current constraints to the development of the tofu industry and suggesting alternatives for overcoming these constraints
2. Assessing the current processing practice in Indonesia and presenting recommendations for improving the current processing practices
3. Developing a joint business model (Kelompok Usaha Bersama) for the tofu industry
4. Preparing and presenting a methodology for conducting TA as well as the preparation and presentation of draft and final report

IV. Expected Out-put

The consultant will commence the assignment on 9th October 1995 and meet with all interested

parties, both public and private sector (Tofu Producer Association, DG, Tanaman Pangan/Horticulture, DG-IHP, PIU, ADP, USAID) and present an agreed upon methodology not later than 13th October 1995.

The consultant will conduct his field work and present the draft final report on or before the 30th of November, incorporating information into the final report, which will be presented before departure on 3rd November 1995.

The major out-puts expected from this TA assignment are the following:

1. Identifying the major current constraints to the development of the tofu industry

2. A report in the form of a working document, setting out the steps needed to improve the tofu industry in Indonesia based on the case study undertaken in Jakarta and Bogor

3. Cost estimates for each of the various proposed improvements covering equipment, processing and packaging of small scale tofu industry

4. An assessment of and recommendations on improving the current research programs and development of product

5. Design a model for modern small scale processing plant which would be sustainable group operated and managed

V. Qualification

The technical assistance (expert) assignment is for one month and will commence on the 9th October 1995. The expert should have a degree in food processing and at least 10 years practical experience in the tofu industry. Fluency in English is essential and desirable for Bahasa Indonesia.

APPENDIX B

THE INDONESIA AGRIBUSINESS DEVELOPMENT PROJECT (ADP)
TECHNICAL ASSISTANCE TO THE TOFU INDUSTRY - A CASE STUDY

SURVEY INSTRUMENT FOR TOFU ENTERPRISES

1. IDENTITY OF THE ENTERPRISE:

Name of enterprise: .....

Address of enterprise: .....
.....
.....
.....

Phone: .....

Name/Title of respondent: ....
.....

2. LOCATION: URBAN [ ] RURAL [ ]

Description of immediate vicinity:

3. HISTORY OF THE ENTERPRISE:

When established: .....

Ownership: Family [ ] Partnership [ ]

NOTES:

4. PRODUCTS MANUFACTURED:

....

5. BUILDING AND UTILITIES:

Dimensions of factory (measure and sketch):

Floor (Describe):

Walls (Describe):

Roof (Describe):

Ventilation (Describe):

Lighting (Describe):

Drainage (Describe):

Space allocation: Processing/Storage/Administration etc. (Describe)

POWER:

Source	Monthly usage	Monthly cost
Electricity	.....	.....
Fuel Oil	.....	.....
Gas	.....	.....
Firewood	.....	.....
Other	.....	.....

Power: Notes

WATER:

Water source:

Water treatment if any:

Water usage: .....

Water cost: .....

6. PERSONNEL:

Category	No. Family	No. Hired	Wage rate
Management	.....	.....	.....
Supervisory	.....	.....	.....
Skilled labor	.....	.....	.....
Unskilled labor	.....	.....	.....
Accounting	.....	.....	.....
Security	.....	.....	.....
OTHERS:			
.....	.....	.....	.....
.....	.....	.....	.....

7. RAW MATERIALS:

Soybeans:

Sources of supply:

Varieties and variety preferences:

Quality according to respondent:

Quality assessment by consultant:

Price structure: (As reported by respondent)

Inventory carried:

Annual usage:

Chemicals:

Coagulants used: (List)

Sources of supply:

Price by coagulant:

Inventory carried:

Detergents:

Detergents used (List):

Sources of supply:

Price by detergent:

Inventory carried:

Packaging materials:

Type(s):

Sources by type:

Cost by type:

Inventory carried:

8. EQUIPMENT AND ACCESSORIES:

TYPE	DESCRIPTION	QUANTITY	UNIT COST
Cleaning:			
Soaking:			
Draining:			

Grinding:

EQUIPMENT AND ACCESSORIES Continued:

Cooking:

Curding:

Pressing:

Cooling:

EQUIPMENT AND ACCESSORIES Continued:

Packaging:

Others (Equipment):

Cheese cloth (Filter media):

Ladles:

EQUIPMENT AND ACCESSORIES Continued:

Brushes:

Work coats/Uniforms:

Boots:

Gloves:

EQUIPMENT AND ACCESSORIES Continued:

Others accessories:

Observations on equipment and accessories:

9. PRODUCTION SCHEDULES:

Hours/Day:	[ ]
Days/Week:	[ ]
Workers/Shift:	[ ]
Kg. Beans/Batch	[ ]
Batches/Day	[ ]
Kg. Tahu/day (Average)	[ ]
Kg. Tahu/Kg. Beans	[ ]

NOTES:

10. PROCESS FLOW (DESCRIBE BY OBSERVATION):

11. PLANT SANITATION (AS OBSERVED):

12. BYPRODUCTS HANDLING AND DISPOSAL (AS OBSERVED):

13. TAXES PAID:

Property tax: [ ]
Business turn over tax: [ ]
Other tax:

..... [ ]

14. SALES:

Sales mechanism:

Self retailing [ ]
Wholesaling [ ]
Both of the above [ ]

Prices:

Retail price/kg. Tahu [ ]

Wholesale price/Kg. Tahu [ ]

Product returns:

Reason unsold [ ]
Reason spoiled [ ]

Frequency and quantity unsold (Make notes):

Frequency and quantity spoiled (Make notes):

15. Record keeping:

Types of records kept:

Cash receipt ledger [Yes / No]
Cash disbursements ledger [Yes / no]
Inventory ledger [Yes / No]
Salaries & wages ledger [Yes / no]

Accounts receivable ledger	[Yes /No]
Monthly income summary	[Yes / No]
Monthly expenditure summary	[Yes / No]
Monthly profit & loss	[Yes / No]

Notes on record keeping:

16. OVERALL ASSESSMENT OF THE ENTERPRISE:

APPENDIX C-1

A SoyaCow grinder/cooker

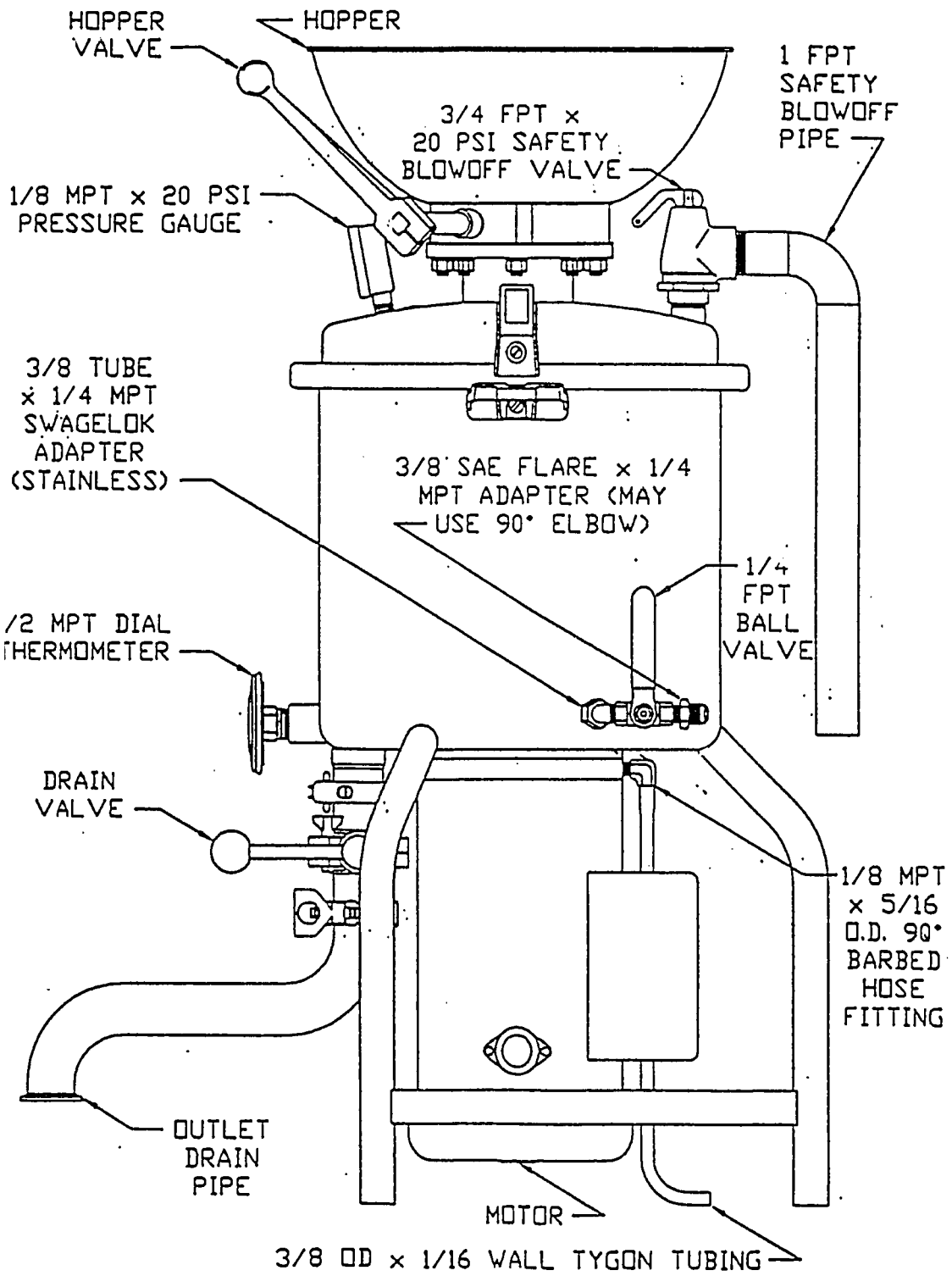

APPENDIX C-2

A SoyaCow mechanical press

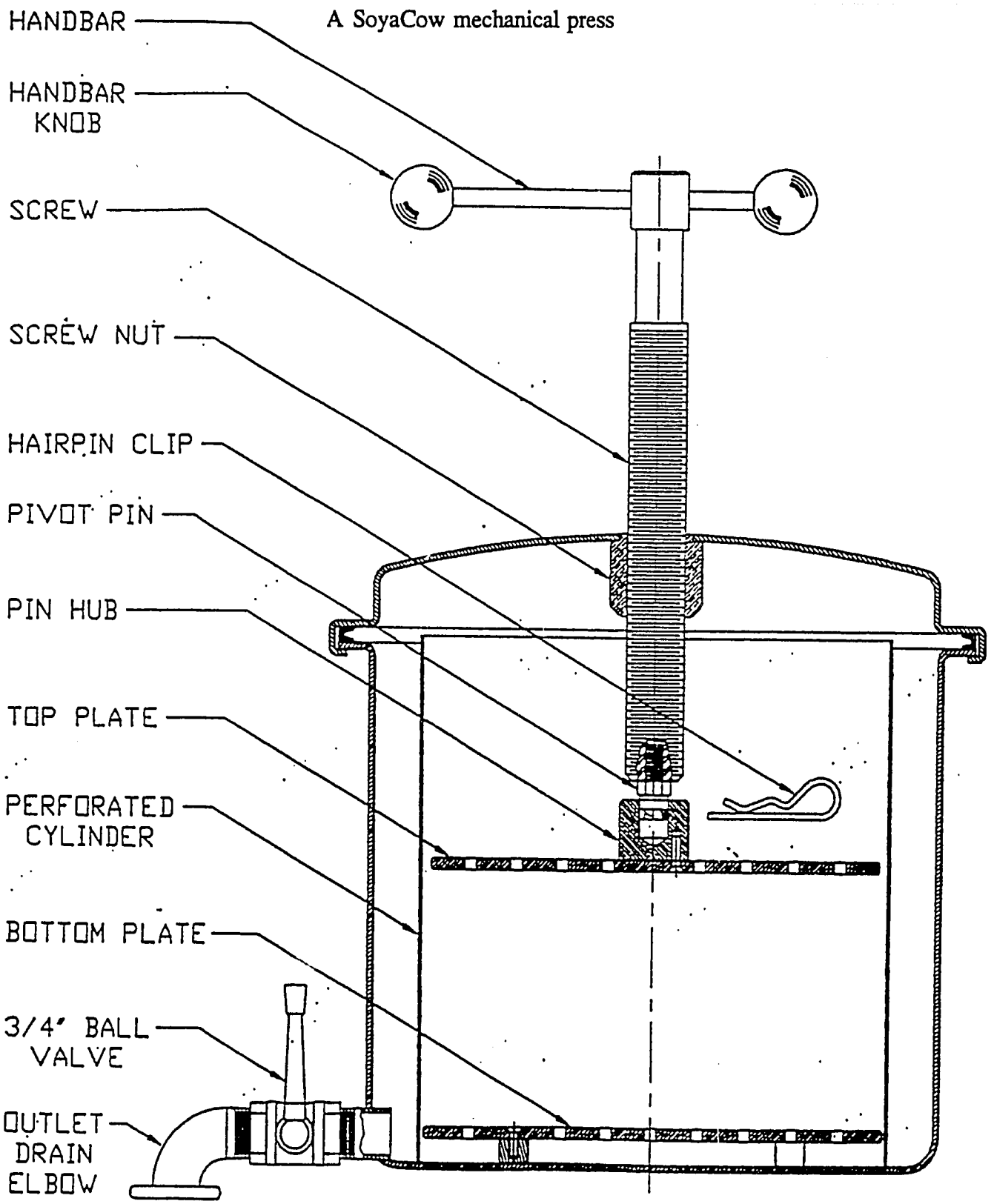

APPENDIX C-3

A low cost fuel fired manual steam generator for SoyaCow

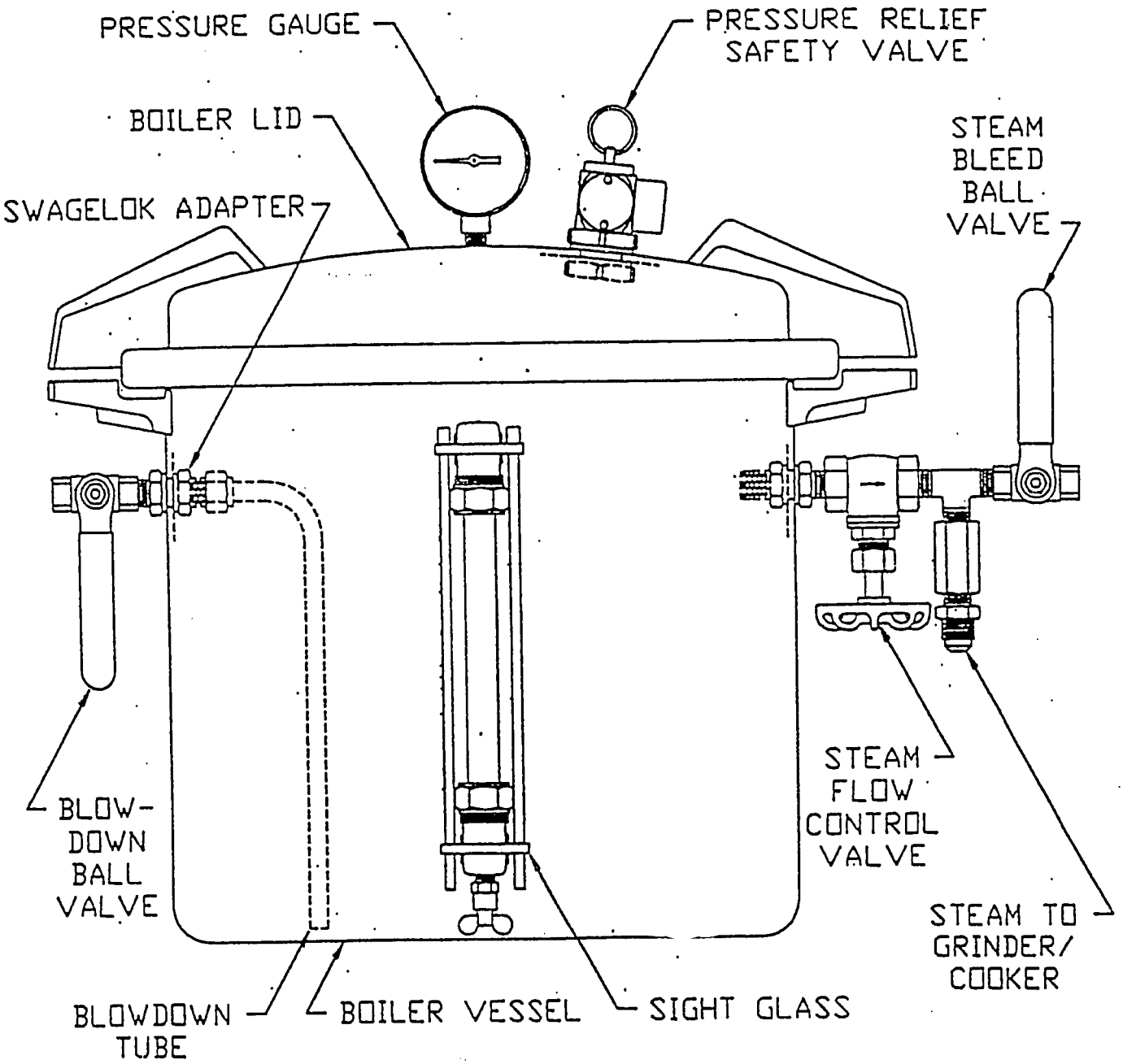

APPENDIX C-4

A suggested floor plan for SoyaCow operation

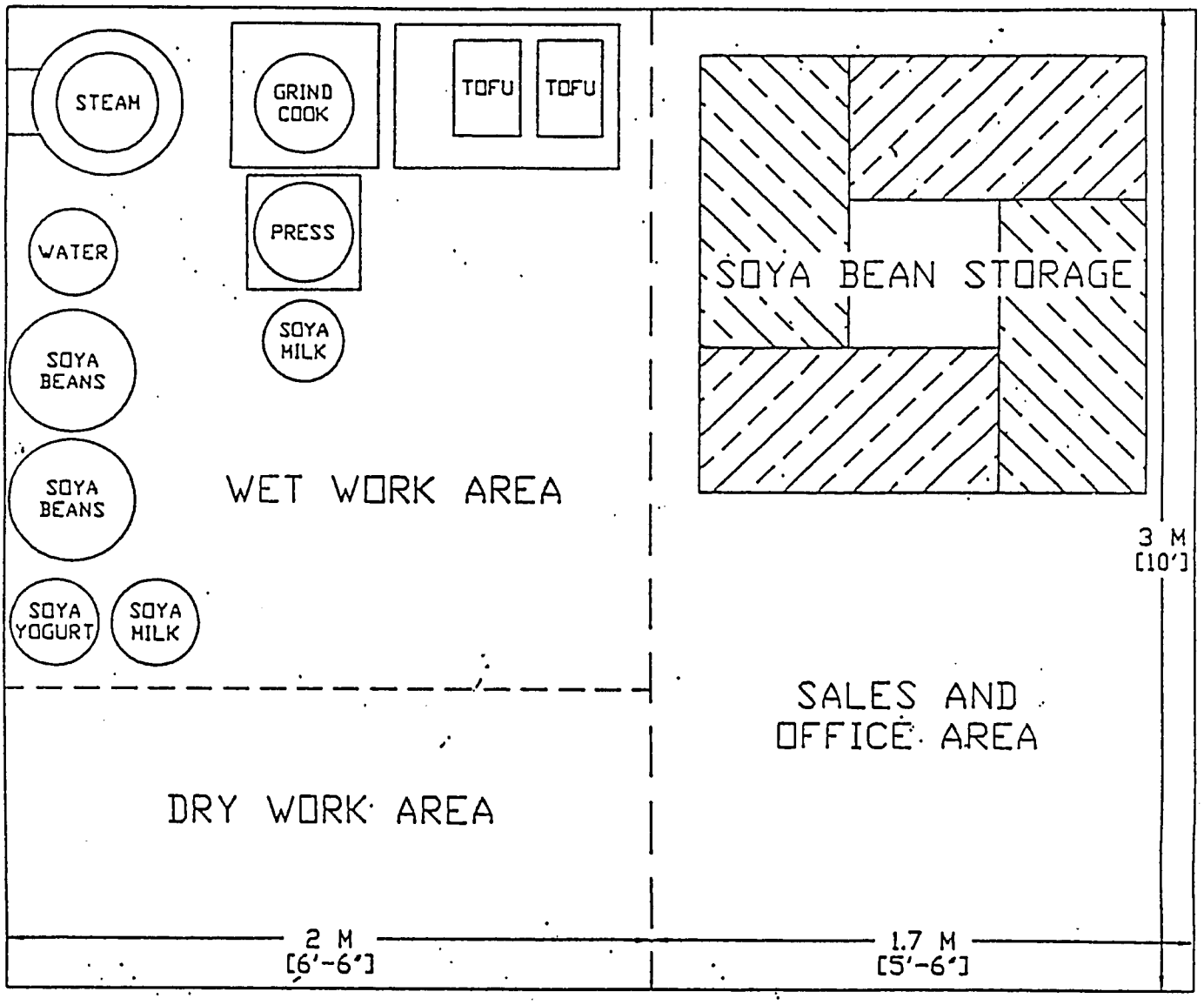

APPENDIX D

Model 2 - Plant Layout

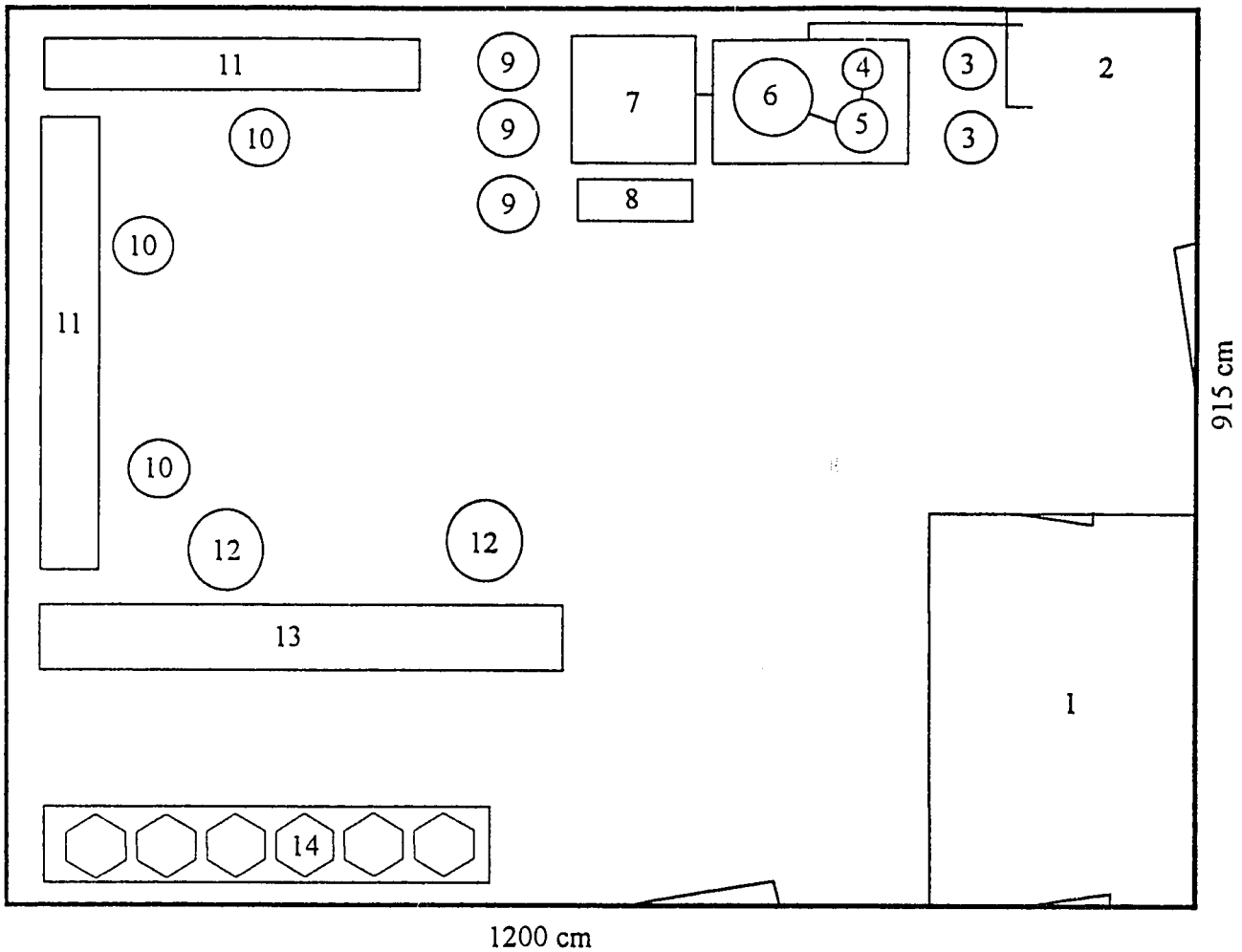

1	Bean Storage	8	Okara Tray
2	Boiler Room	9	Curding Barrels
3	Soaking Tanks	10	Curd, ready to press
4	Wet Grinder	11	Pressing Tables
5	Slurry Tank	12	Cooling Tanks
6	Pressure Cooker	13	Packing Table
7	Roller Extractor	14	Storage Racks

APPENDIX E

Model 3 - Plant Layout

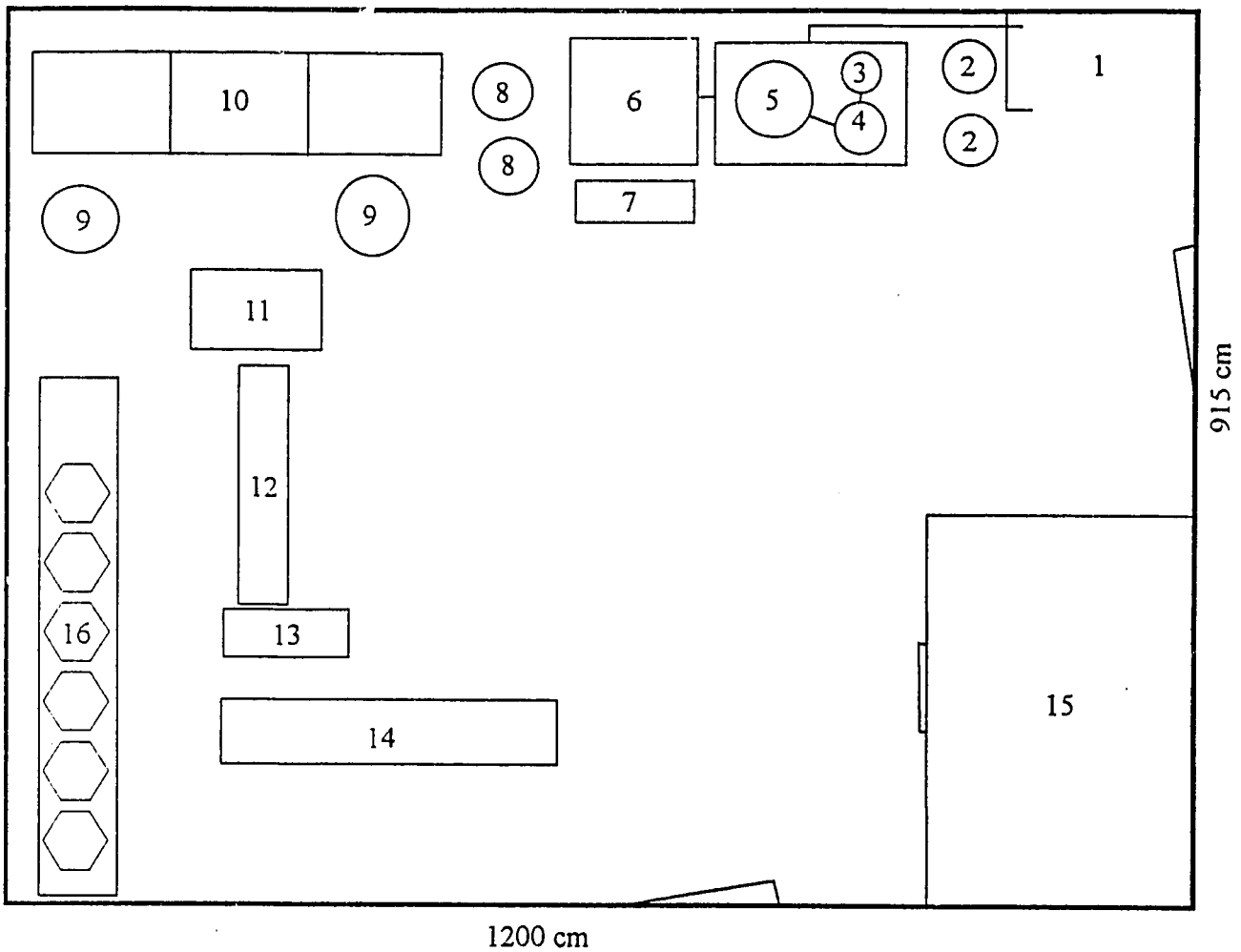

1	Boiler Room	9	Curd, ready to press
2	Soaking Tanks	10	Pneumatic Press Unit
3	Wet Grinder	11	Cooling Tank
4	Slurry Tank	12	Packaging Machine
5	Pressure Cooker	13	Receiving Table
6	Roller Extractor	14	Packing Table
7	Okara Tray	15	Walk-in Cooler
8	Curding Barrels	16	Storage Racks

ENCLOSURES 2 & 3

Takai®
Tofu & Soymilk Equipment Co.
Catalog of Small and Medium-Scale Equipment

BAR N.A. Inc

Process Equipment and Technology Trans

Basic Equipment

Detailed descriptions of most of the equipment in this catalog are given in **Tofu & Soymilk Production**, by Shurtleff and Aoyagi, available from The Soyfoods Center (see **Publications and Information** at end of this catalog.)

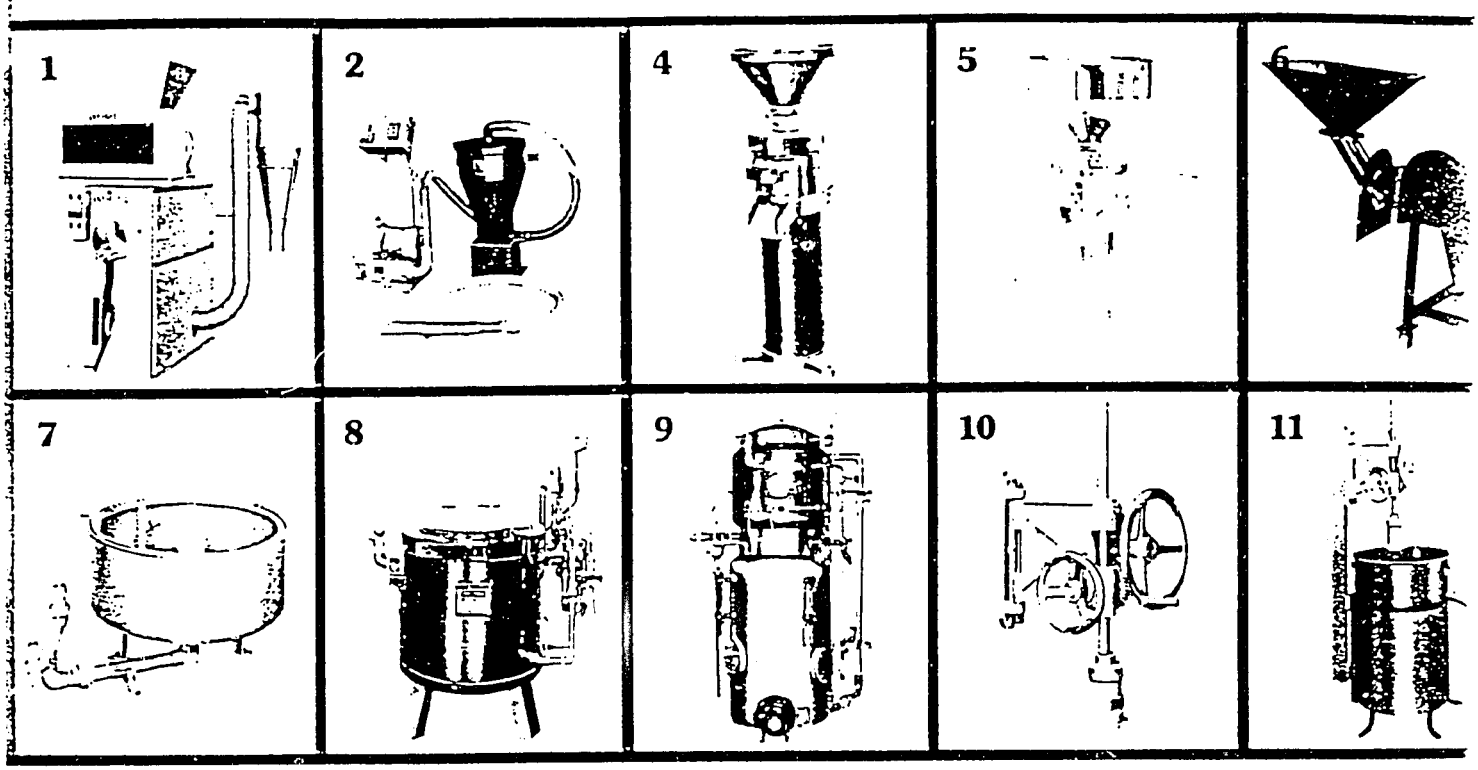

DEHULLER & SOYBEAN CONVEYOR

1 TR-YKS-20BS : The moisture controller of the dehuller dries soybean surface by heat. It makes it easy to peel the beans. Capacity:Approx. 100 kg dry beans per hour. Size: 125 by 150 by 202 cm. Motor. 3 phase. 1.7 kw. Steam 15 kg/hr. Larger models available.

2 TR-TAK-VC : Vacuum conveyor. Transports soaked soybeans from soaking tank to grinding unit. Models: 0.75 kw, 1.9 kw and 3.4 kw. 3 phase motor. Sucks up 60 to 450 kg of soaked beans per hour from distance of 5 to 20 meters. Includes nozzle and 5 m length pipe.

MILLS, Stone and Stainless Steel

4 MI-TAK-CG : Horizontally mounted conical stones (the most powerful and effective configuration). Body and hopper stainless steel and aluminum. Models: CG17, CG23. 17 cm and 23 cm diameter stone mills available. Grinds max. 2.7 kg(CG17), 7 kg (CG23) of soybeans (dry wt.) per minute to fine puree. Outside dimensions: 45 by 45 by 116 cm (CG17), 55 by 55 by 122 cm (CG23). Weight 60 kg (CG17), 120 kg (CG23). Rust proof. Motor, 3 phase. 1.5 kw (CG17), 3.7 kw(CG23).

5 MI-NAG-NSG8 : Horizontally mounted stones of 20 cm diameter. 0.75 kw motor. Grinds 2 kg of soybeans (dry wt.) per minute to fine puree. 1500 rpm. Weight, 45 kg. 105 cm tall, 43 cm diameter. Body: iron; hopper: stainless steel.

6 MI-BMI-B300 : Designed to grind soaked beans with hot water. Stainless steel. Capacity: 2.2 kg dry beans per minute. Size: 115 by 75 by 116 cm. Motor. 3 phase. 3.7 kw.

SLURRY TANK

Placed below mill to catch puree or slurry (gō) before it is sucked into pressure cooker.

7 ST-TAK-TP : Stainless steel. 60 cm in diameter. 34 cm(TP) or 42 cm(TPL) deep, with piping that runs half way to pressure cooker and perforated ring around tank's top for adding water and rinsing down slurry.

PRESSURE COOKERS

For easy operation, pressure cookers should be used with a #7 Slurry Tank.

8 PC-TAK-X : Stainless steel with clamped lid for maximum safety at high pressures. Easy opening lid. Cooks one batch (10 kg dry beans) every 6 minutes, yielding about 240 kg of tofu per hour. 60 cm in diameter, 140 liters (X) or 180 liters (XL) total capacity. Equipped with safety valve, pressure gauge, agitator, and thermometer.

9 PC-TAK-B20-8 : Basic cooker equipped with boiler. Compact. Capacity: 40 kg dry beans per hour. Size: 75 by 75 by 165 cm. Motor, single phase, 0.2 kw. Includes rotary burner, oil tank, and chimney pipe.

PRESSES AND EXTARCTORS

10 PR-TAK-A4 : Hand-turned press without rack or platform.

11 PR-TAK-A4HD : Hand-turned screw press with stainless steel pipe pressing rack and stainless support platform.

12 PR-TAK-AY : Hydraulic press, stainless steel, applies 2000 kg force. Complete pressing in 3 minutes. Size: 62 cm in diameter, 90 cm tall, 3 phase, 0.2 kw motor.

13 PR-TAK-FM50 : Continuous roller extractor. Separates soymilk from okara at the rate of 50-65 kg of dry beans per hour yielding about 200 kg of tofu, or 250 to 350 liters of soymilk. Size: 116 by 102 by 154 cm. Weight, 200 kg. Contains two 0.2 kw. 3-phase motors. Works constantly without use of cloth sacks or bags; filters are stainless steel. Includes perforated pressing drum. Stainless steel model (FM50(S)) and sanitary piping model (FM50(SA)) also available.

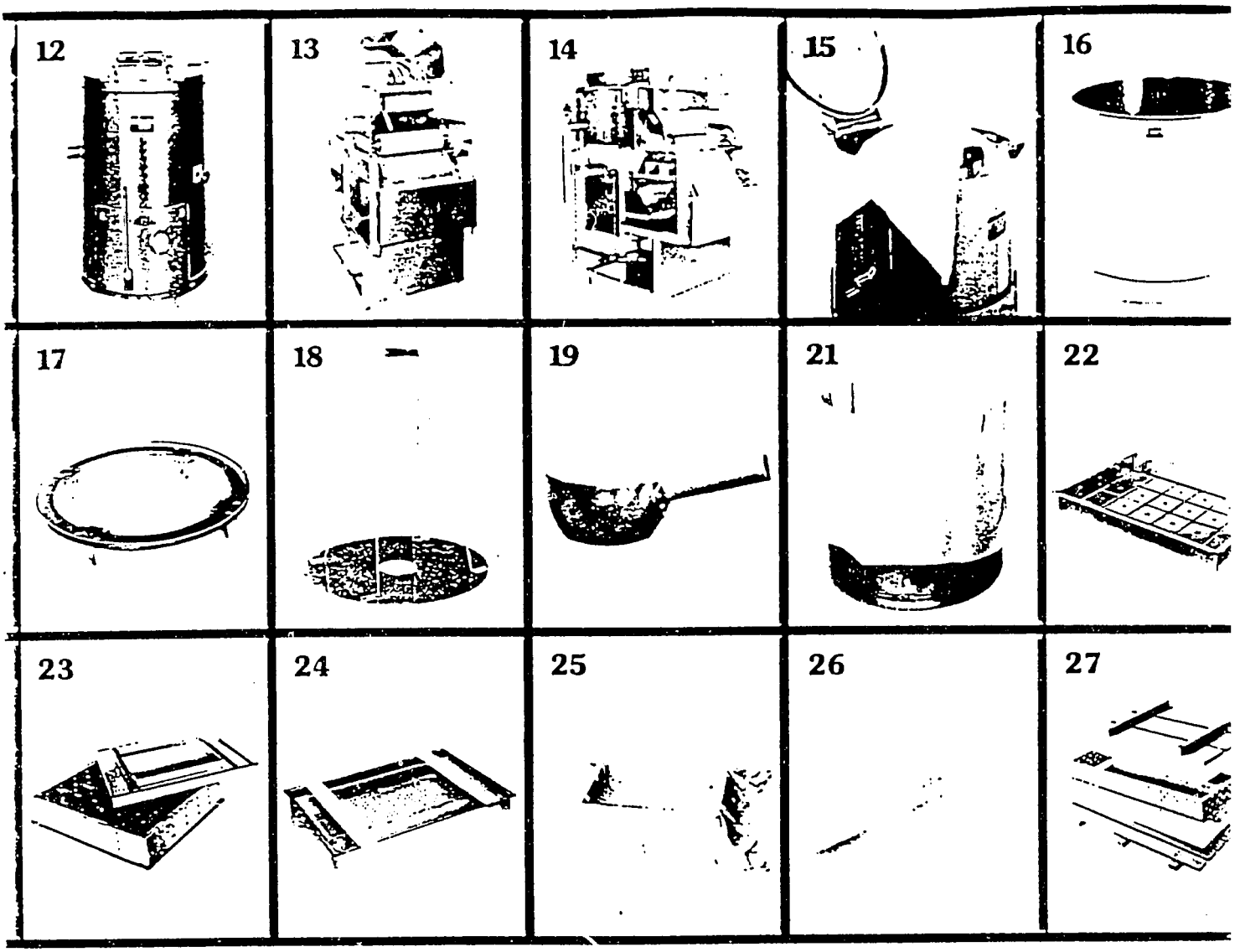

14 PR-TAK-FM70 : Continuous roller extractor similar to FM50 but with 2 helical filter cylinders. Capacity: 70-85 kg of dry beans per hour. Size: 116 by 106 by 155 cm. Includes perforated pressing drum. Stainless steel model (FM70(S)) and sanitary piping model (FM70(SA)) also available.

PRESSING SACK

Best quality nylon. Widely used in Japanese shops. Much easier to wash and more readily accepted by health inspectors than cotton or hemp sacks.

15 PS-KRM-PS : 122 cm long. 51 cm wide. 400 g dry weight. Used with #10. #11 Hand-turned press or #12 Hydraulic press.

CURDING BARREL, CASTERS, MIXING PLATE, DIPPER & SOYMILK BUCKET

16 CB-TAK-0 : Stainless steel. 110 liters capacity with 0.81 mm-thick wall. 54 cm in diameter. 48 cm deep.

17 CB-TAK-OD : Curding barrel support platform with casters for rolling. Aluminum.

18 CB-TAK-ONE : Mixing plate for quick, deep-level mixing of soymilk and coagulant. Stainless. 49 cm in diameter.

19 CB-TON-DIA : Aluminum. 15 cm diameter.

STRAINING BAG

21 SB-KRM-SB : Medium weave. 90 cm wide. 90 cm deep. 70 g dry weight.

FORMING BOXES & CUTTER (Tofu)

22 FB-TAK-KS : Shallow stainless steel box without lid. Size: 45 by 50 by 9 cm deep.

23 FB-TAK-KST : Shallow stainless steel box with lid. Size: 45 by 5[illegible] by 9 cm deep. Very sturdy.

24 FB-TOY-ASA : Shallow stainless steel box. Lid design allows exac regulation of tofu thickness. Uses no cloths. Optional jig (ordere separately) allows quick tofu removal without immersion in wate Size: 38.5 by 55 by 11 cm deep (ASA). A 13 cm deep box (ASAL) available at a slightly higher price.

25 FB-KRM-FC : Forming box cloth. Cotton cloth designed to fit th forming box of your choice.

26 FB-TON-KNS : Stainless steel knife for cutting finished tofu. 4[illegible] cm long and 9 cm wide at blade.

FORMING BOX & CUTTER (Deep-fried Tofu)

27 FB-TAK-KKT : Forming box for deep-fried tofu. Shallow stainles steel frame. Box separates into 3 pieces. Used without cloths. 50 b 80 by and 9 cm deep.

28 FB-TAK-RC : Rolling cutter. Quick, even cutting. Stainless stee Radius of blades: 31 mm (RC31) or 53 mm (RC53). Knife blades tyc also available.

FORMING BOXES & CUTTERS (Silken Tofu)

Silken tofu forming box has no holes because pressing process not necessary.

29 FB-TAK-MK : Shallow silken tofu forming box: stainless. 30 by 42 by 11.8 cm deep.

30 FB-TAK-MKB : Silken tofu cutter and string type cutter, designe to fit #29 silken tofu box. Quick, even cutting for each piece of tof

31 FB-TAK-H : Deep silken tofu forming box: stainless. 18 by 36 [illegible] 24 cm deep.

32 FB-TAK-HB : Silken tofu cutter, designed to fit #31 silken tofu bo Quick, even cutting.

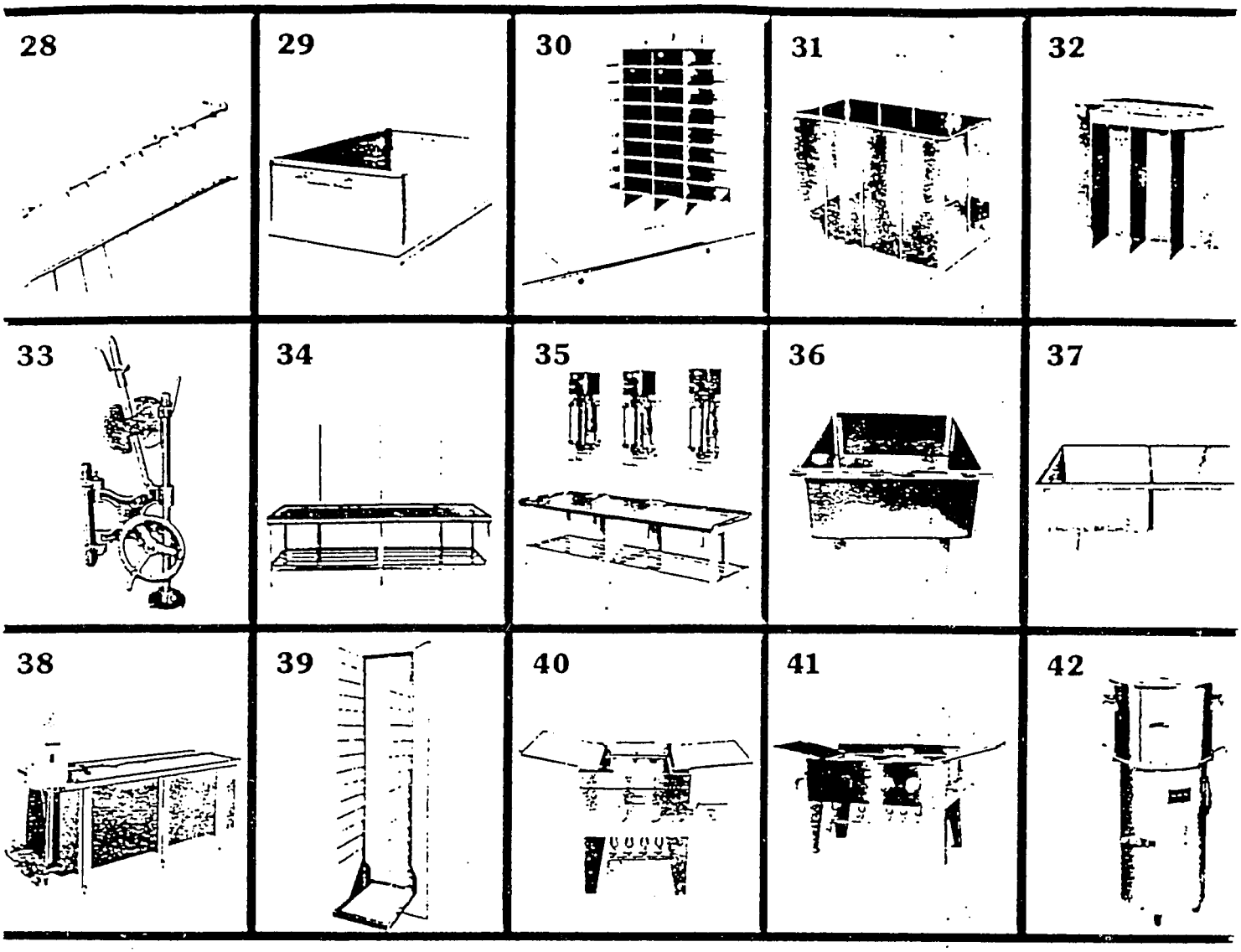

PRESSES AND FORMING BOX TABLES

33 RP-TAK-S300 : Ratchet press used for firming tofu in the forming boxes. Applies up to 300 kg of force. Pressure is controllable. Comes without vertical column on which ratchet press is mounted.

34 RP-TAK-KD : Forming box table on which the boxes rest during pressing. Stainless top. 60 by 192 by 54 cm. Includes 3 vertical columns on which ratchet presses are mounted. Stainless steel model KD(S) available.

35 RP-TAK-APKD : Air cylinder press and table used for firming tofu in forming boxes. Pressure is controllable manually (0-6kg cm⁻²) or use low high settings. Available stainless steel model APKD(S). Both models are also available with 0.4 kw air compressor APKD-C, APKD(S)-C.

TANKS. Cooling and Pasteurizing

36 CT-TAK-SC : Circulating water design. Single compartment, stainless steel. Tap water runs in through pipe at bottom; tofu rests on raised, perforated bottom. Interior size: 30 by 60 by 42 cm deep.

37 CT-TAK-SD : Double compartments. Total interior size: 150 by 75 by 42 cm deep.

38 CT-TAK-PT : Thermostatically controlled pasteurizing and cooling tank. Uses steam. Capacity: 500 (300 g), 330 (1 pound) tubs per hour. Interior size: 155 by 97 by 60 cm deep for 300 g tubs (PT) or 230 by 97 by 92 cm deep for 1 pound tubs (PTL). Two or three tank models also available.

TOFU RACK

39 DF-TAK-MT : For draining water from dough of deep-fried tofu. Size: 45 by 45 by 180 cm.

DEEP-FRYERS

40 DF-TAK-NNP : For deep-fried tofu cutlets. Single compartment, stainless: 45 cm-square by 15 cm-deep container. Power. LP (Liquid Propane Gas).

41 DF-TAK-NP : For deep-fried tofu pouches. Double compartment, stainless steel: 90 by 45 by 12 cm-deep, total container size. Power. LPG.

TOFU BURGER MACHINES

42 TB-TAK-HC : Tofu burger kneading machine. 83 cm high, 4 cm in diameter. 0.2 kw motor. Kneads 9 to 12 kg of tofu per batch in about 5 minutes.

43 TB-NKR-C15 : Tofu burger shaper. Drops equally shaped dough on the belt. Capacity: 2400 pcs per hour. Size: 48 by 60 by 60 cm. 3 phase, 0.4 kw.

44 TB-FMR-SF32 : Food slicer for cutting vegetables to be mixed in tofu burger and for tofu pouches. Slicing thickness: 1 to 16 mm. Capacity: 100 to 400 kg of vegetables per hour. Motor, single phase 300 w.

YUBA MACHINE

50 YB-TAK-YBM : Heats soymilk directly to form a film (called "yuba") on the surface of soymilk. Capacity: 18 sheets per hour (yuba size: 35 by 40 cm). Outside dimensions: 60 by 240 by 170 cm. Single phase, 0.05 kw.

SOYMILK COOLERS & HOT WATER SUPPLIER

60 SP-OKJ-C12S : Hot soymilk poured from the top is cooled down while it runs down the surface of many water pipes. Capacity: soymilk 150 liters per hour. Size: 30 by 90 by 130 cm. Larger model C12W(capacity: soymilk 300 liters per hour) available.

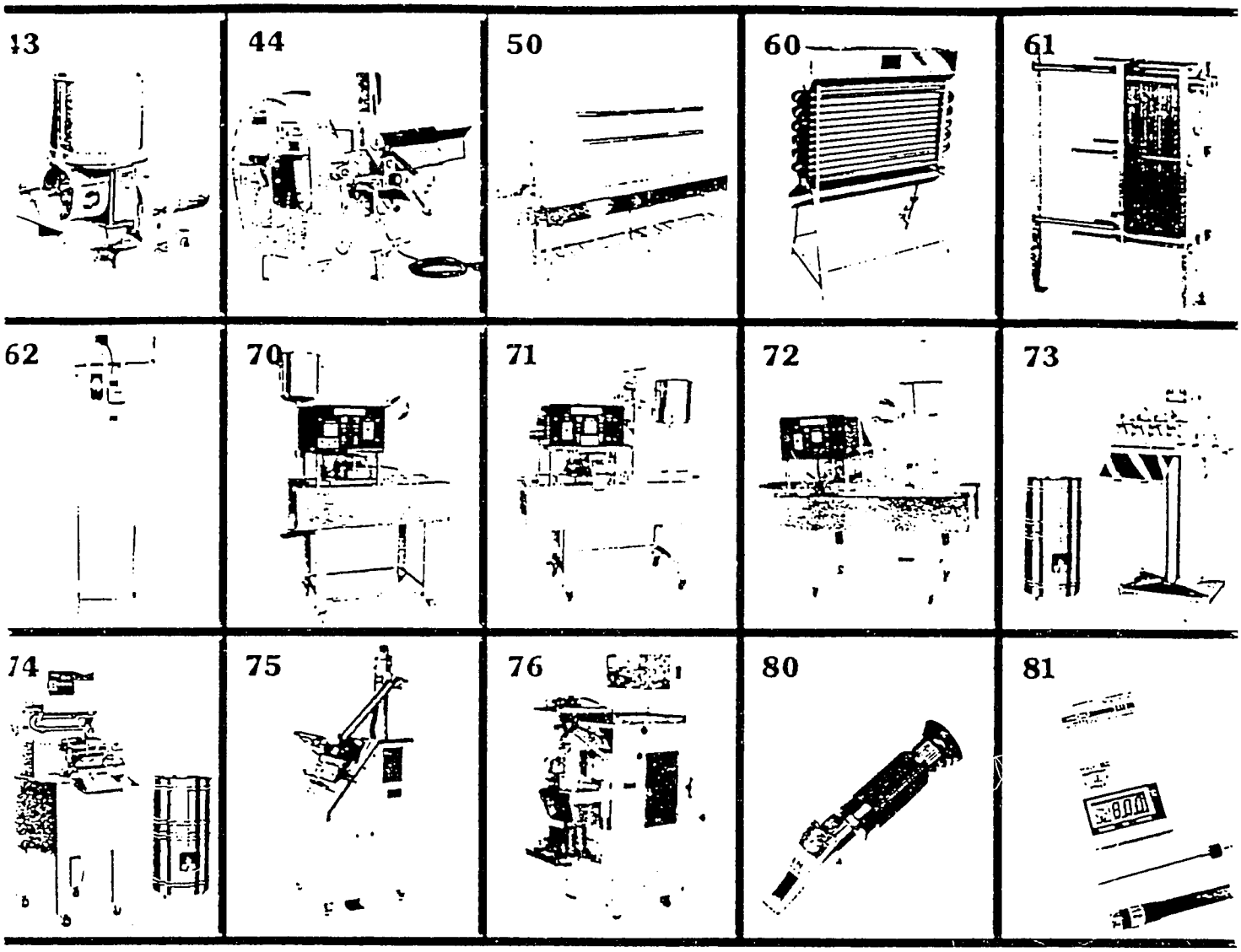

61 SP-TON-HE : Heat exchanger, consists of a series of thin troughed plates surrounded by circulating cold water. Quickly cools hot soymilk from 85 C to 35 C by underground water (25 C), and to 15 C by chilled water (7 C). Without pump. Capacity: soymilk 150 liters (HE150) or 300 liters (HE300) per hour. Size: 19 × 44 × 71 cm.

62 HW-EBR-HW : Heats water with steam. Capacity. 500 liters per hour at temp. 90 C. Size: 35 × 40 × 138 cm. Single phase. 0.05 kw.

HEAT SEALERS

These work well using film and containers made of stirol, polypropylene, or vinyl chloride. Send us your container as a sample when you order, to design the sealer to meet your needs. They heat to about 300 C. The placement of the pattern is adjustable with the dial. Automatic placement by sensor is available at your option.

70 HS-KYO-K720 : The smallest automatic model on the market. Packages 720 cakes per hour. Size: 100 by 48 by 170 cm. Motor, single phase. 200 watts. Heater, single phase. 400 to 500 watts. Excludes date printer. Stainless steel frame model K720(S) available.

71 HS-KYO-K1020 : Automatic. Packages 800 to 1600 cakes per hour. Size: 140 by 54 by 170 cm. Motor, single phase. 300 watts. Heater single phase. 400 to 500 watts. Larger models that will package up to 3,800 cakes per hour also available. Includes date printer. Stainless steel frame model K1020(S) available.

72 HS-KYO-K860J : Basic automatic model for packaged lactone silken tofu. Packages 860 pcs per hour. Size: 120 by 48 by 170 cm. Motor, single phase. 200 watts. Pump, single phase. 300 watts. Heater, single phase. 400 to 600 watts. Includes date printer.

FILLER & SEALERS

Fills and seals soymilk or other beverages in polyethylene bags. Capacity of the bag ranges from 150 g to 500 g. To ensure longer shelf life, pasteurizing is available.

73 HS-BNN-TS4 : Manual. Packages 400 pcs (250 g) per hour. Size: 45 by 60 by 95 cm. Heater, single phase. 500 watts. Pump, single phase. 130 watts.

74 HS-BNN-TF60 : Semi-automatic filler. Packages 600 pcs (250 g) per hour. Size: 55 by 70 by 140 cm. Automatic sealing. Heater, single phase. 1 kw. Pump, single phase. 130 watts. Compressor, single phase 200 watts.

75 HS-CHU-MS2 : Semi-automatic filler. Packages 960 pcs (250 g) per hour. Size: 60 by 60 by 150 cm. Heater, single phase. 600 watts. Pump, single phase. 100 watts.

76 HS-CHU-MS7 : Automatic filler. Packages 1200 pcs (250 g) per hour. Three side sealing. Size: 54 by 108 by 144 cm. Heater, single phase. 900 watts. Motor, 3 phase. 200 watts.

INSTRUMENTS

80 IN-TON-RE : Essential for measuring the percent of soluble solids in soymilk. Compact, hand held.

81 IN-TON-TM : Digital thermometer for measuring temperature of soymilk. Wide range and accurate. Measuring range: -50 to 999. Resolution: 1 C.

Whole Systems

All equipment with numbers greater than #100 is described in the Takai Catalog of Large-Scale Equipment.

The capacities of whole systems W30A, W30B, and W30C are based on two workers.
These capacities can be doubled by adding two more workers.

All stainless steel systems are available.

W30A

S30X + S30A

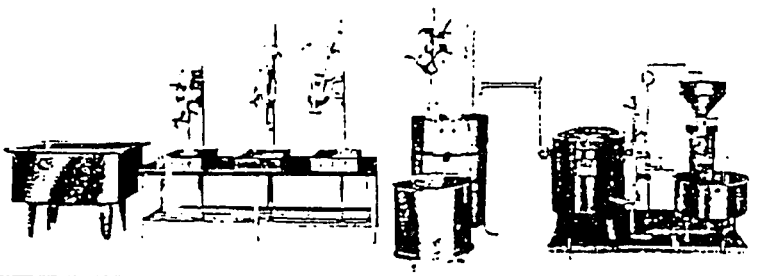

W30B

S30X + S30B

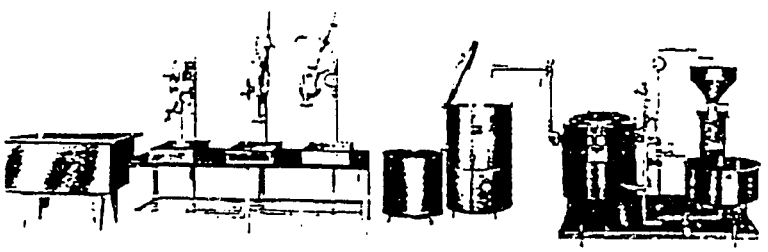

WHOLE SYSTEM 30A (W30A) : Includes all items in SUB-SYSTEM 30A (S30A) and SUB-SYSTEM 30X (S30X) : Makes about 120 kg of tofu (soft Japanese tofu) from 30 kg of dry soybeans per hour.

SUB-SYSTEM 30A (S30A) : Makes about 200 liters of soymilk per hour. Includes (from right to left) : a #4 conical stone mill, a #7 slurry tank (34 cm deep), a #8 pressure cooker (140 liters total capacity), a #11 hand-turned screw press, two #15 pressing sacks and two #21 straining bags.

SUB-SYSTEM 30X (S30X) : Includes (from right to left) : three #16 curding barrels and #17 support platforms with casters, a #19 dipper, a #18 mixing plate, three #33 ratchet presses, a #34 forming box table, seven #23 forming boxes, ten #25 forming box cloths (designed to fit boxes), two #36 cooling tanks and two #26 knives.

WHOLE SYSTEM 30B (W30B) : Includes all items in SUB-SYSTEM 30B (S30B) and SUB-SYSTEM 30X (S30X) : Makes about 120 kg of tofu (soft Japanese tofu) from 30 kg of dry soybeans per hour.

SUB-SYSTEM 30B (S30B) : Makes about 200 liters of soymilk per hour. Includes (from right to left) : a #4 conical stone mill, a #7 slurry tank, a #8 pressure cooker, a #12 hydraulic press, two #15 pressing sacks and two #21 straining bags.

SUB-SYSTEM 30X (S30X) : See above

WHOLE SYSTEM 30C (W30C) : Includes all items in SUB-SYSTEM 30C (S30C) and SUB-SYSTEM 30X (S30X) : Makes about 120 kg of tofu (soft Japanese tofu) from 30 kg of dry soybeans per hour.

SUB-SYSTEM 30C (S30C) : Makes about 200 liters of soymilk per hour. Includes (from right to left) : a #4 conical stone mill, a #7 slurry tank, a #8 pressure cooker, a #13 roller extractor and two #21 straining bags.

SUB-SYSTEM 30X (S30X) : See above.

WHOLE SYSTEM 60A (W60A) : Includes all items in SUB-SYSTEM 60A (S60A) and SUB-SYSTEM 60X (S60X) : Makes about 240 kg of tofu (soft Japanese tofu) from 60 kg of dry soybeans per hour.

SUB-SYSTEM 60A (S60A) : Makes about 400 liters of soymilk per hour. Includes (from right to left) : a #4 conical stone mill, a #7 slurry tank (42 cm deep), a #8 pressure cooker (180 liters, total capacity), a #14 roller extractor and three #21 straining bags.

SUB-SYSTEM 60X (S60X) : Includes (from right to left) : five #16 curding barrels and #17 support platforms with casters, two #19 dippers, two #18 mixing plates, three #35 air cylinder presses and tables with a compressor, ten #23 forming boxes, fifteen #25 forming box cloths, three #37 cooling tanks, and two #26 knives.

W30C S30X + S30C

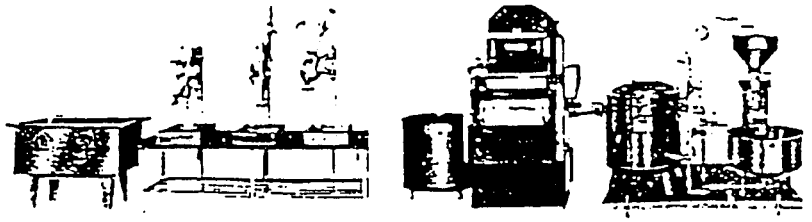

W60A S60X + S60A

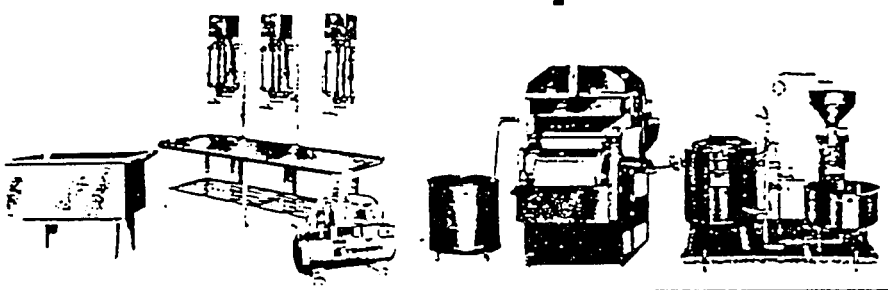

Tofu School

A three-day training program covering operating and maintenance of commercial tofu-making equipment is now available at the Takai factory in Kanazawa, Japan. Instruction is in English by Takai factory engineers. Contact us for details if you are interested.

INGREDIENTS

CALCIUM SULFATE

90 CS-AKO-CS : 15 kg bags. food grade. Good for making silken tofu and regular tofu.

DEFOAMER (Awakeshi : foam dissolver)

91 DE-TON-CC : 8 kg carton box. Sprinkle when grinding.
92 DE-TON-SI : 1 kg container. silicone base. Spray when curding.

NATURAL NIGARI (Magnesium Chloride)

The finest and most natural product available anywhere in the world.
93 NN-TON-MG : 20 kg bags.

MISCELLANEOUS

INDUSTRIAL SOAP POWDER

Specially formulated for cleaning tofu equipment and utensils. One case contains four 5 kg boxes.
94 SP-TAK-SB : Takai Super Blue. For general cleaning.
95 SP-TAK-SR : Takai Super Red. For cleaning deep-frying equipment.

PACKING MATERIALS

96 PM-TON-PC : Tofu plastic containers. 2B size. Inside dimensions: 116 × 80 × 38 mm deep. Thickness. 0.33 mm. Polystylene. Minimum order. 200.000 pcs.
97 PM-TON-RF : Sealing film. 2 color printing. 2B size. 500 m length per roll. width 140 mm. Thickness : 0.052 mm. Laminate of PET and PS. Minimum order. 19.000 m.
98 PM-TON-PP : Plastic pouches for soymilk and tofu. 2 color printing. 140 g, 250 g and 280 g type. Thickness : 0.098 mm. Polyetnylene. Minimum order. 200.000 pcs.

PUBLICATIONS AND INFORMATION

The following publications are important for producers of tofu and soymilk : **The Book of Tofu**. $3.50 (Ballantine Americanized. condensed edition) ; **The Book of Tofu**. $11.95 (Ten Speed Press) ; **Tofu & Soymilk Production**. $29.95 (The Soyfoods Center : the key book). Add $1.50 per book for surface postage.
Send prepaid order to : The Soyfoods Center. P.O.Box 234. Lafayette. CA 94549 USA

SILKEN TOFU PRODUCTION SYSTEM

PACKAGED LACTONE SILKEN TOFU PRODUCTION SYSTEM

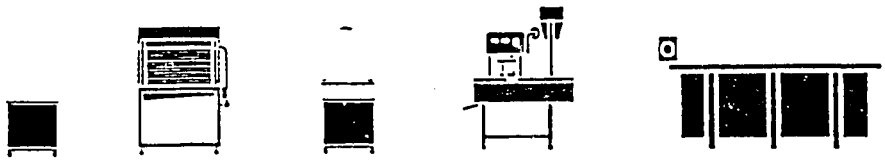

TOFU POUCH PRODUCTION SYSTEM

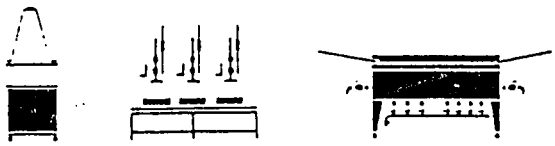

TOFU CUTLET PRODUCTION SYSTEM

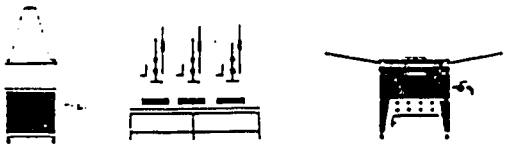

TOFU BURGER PRODUCTION SYSTEM

LOW-BEANY FLAVOR SOYMILK PRODUCTION SYSTEM

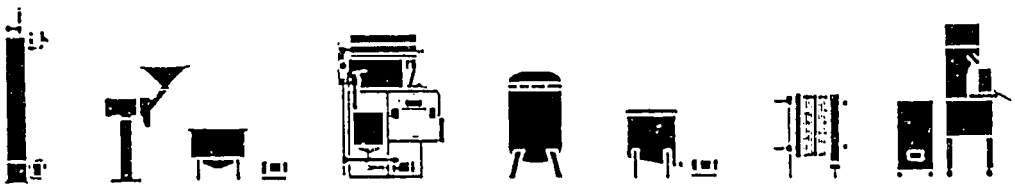

SILKEN TOFU PRODUCTION SYSTEM

Model : S30-SILKEN

Makes 500 pcs of silken tofu (300 g pc) from soybean 30 kg per hour. Includes (from left to right) : three ☐16 curding barrels and ☐17 support platforms with casters, a ☐19 dipper, eight ☐29 silken tofu forming boxes, a ☐30 silken tofu cutter and two ☐37 cooling tanks.

PACKAGED LACTONE SILKEN TOFU PRODUCTION SYSTEM

Model : S30-JUTEN

Makes 500 pcs of packaged lactone silken tofu (300 g pc) from soybean 30 kg per hour. Includes (from left to right) : four ☐16 curding barrels and ☐17 support platforms with casters, a ☐18 mixing plate, a ☐19 dipper, a ☐60 soymilk cooler (capacity: soymilk 150 liters per hour), a ☐72 heat sealer and a ☐38 pasteurizing tank (for 300 g tubs).

TOFU POUCH PRODUCTION SYSTEM

Model : S30-POUCH

Makes 150 pcs of tofu pouch (7.5 · 15 · 1.5 cm) from soybean 3 kg per hour. Includes (from left to right) : two ☐16 curding barrels and ☐17 support platforms with casters, a ☐18 mixing plate, a ☐19 dipper, three ☐33 ratchet presses, a ☐34 forming box table, six ☐23 forming boxes, ten ☐25 forming box cloths, a ☐26 knife and a ☐41 deep-fryer

TOFU CUTLET PRODUCTION SYSTEM

Model : S30-CUTLET

Makes 160 pcs of tofu cutlet (300 g pc) from soybean 20 kg per hour. Includes (from left to right) : three ☐16 curding barrels and ☐17 support platforms with casters, a ☐18 mixing plate, a ☐19 dipper, three ☐33 ratchet presses, a ☐34 forming box table, seven ☐23 forming boxes, ten ☐25 forming box cloths, a ☐26 knife and a ☐40 deep-fryer.

TOFU BURGER PRODUCTION SYSTEM

Model : S30-BURGER

Makes 450 pcs of tofu burger (30 g pc) from soybean 7 kg per hour. Includes (from left to right) : two ☐16 curding barrels and ☐17 support platforms with casters, a ☐18 mixing plate, a ☐19 dipper, three ☐33 ratchet presses, a ☐34 forming box table, six ☐23 forming boxes, ten ☐25 forming box cloths, a ☐36 cooling tank, a ☐42 tofu burger kneading machine and a ☐41 deep-fryer.

LOW-BEANY FLAVOR SOYMILK PRODUCTION SYSTEM

Model : S30-LOW BEANY

Makes 600 bags of soymilk (250 cc bag) from soybean 20 kg per hour. Includes (from left to right) : a ☐62 hot water supplier, a ☐6 stainless steel mill, a ☐7 slurry tank (34 cm deep), a soymilk pump, a ☐13 roller extractor (stainless steel model), a ☐8 pressure cooker, a soymilk tank (100 liters, total capacity), a soymilk pump, a ☐61 heat exchanger (capacity: soymilk 150 liters per hour) and a ☐74 filler & sealer.

MASTER-BILT TOP MOUNTED FOODSERVICE REACH-INS

Food Service Solid Door Reach-Ins

Model No	List Price	Dimensions (In.) L	D	H	HP	Cu Ft.	Ship Lbs.
White Baked Enamel Interior and Exterior							
Medium Temp							
TUC-27	$3472	31	35¾	82½	1/3	26	390
TUC-48	$4370	52	35¾	82½	1/3	45	535
TUC-74	$5854	78	35¾	82½	1/2	70	740
Remote - Less Condensing Unit - See Page 22							
TUC-27R	$3069	Order Condensing Unit # BHH-005C					305
TUC-48R	$3822	Order Condensing Unit # BHH-005C					505
TUC-74R	$5195	Order Condensing Unit # BHH-007C					715
Low Temp							
TUF-27	$4128	31	35¾	82½	1/2	26	420
TUF-48	$5375	52	35¾	82½	3/4	45	590
TUF-74	$7269	78	35¾	82½	1	70	760
Remote - Less Condensing Unit - See Page 22							
TUF-27	$3388	Order Condensing Unit # BCX-007C					355
TUF-48R	$4496	Order Condensing Unit # BCX-010C					535
TUF-74R	$6067	Order Condensing Unit # BCX-015C					665

Accessories listed on page 29

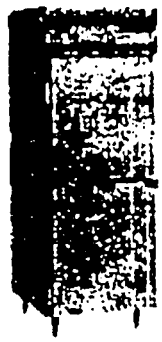

TUF-27

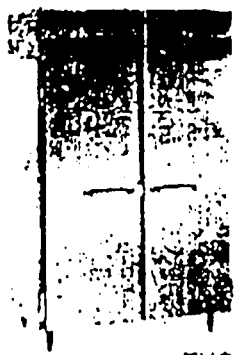

TUC-48

TUC-74

MASTER-BILT STEP-IN COOLERS AND FREEZERS

Step-In Coolers and Freezers

BEST AVAILABLE COPY

Model No	List Price	Dimensions (In.) L	D	H*	HP	Cu. Ft.	Ship Lbs.
Medium Temp							
CM-3-50	$4707	62	49	88¾	1/2	95	825
CM-156-50	$6411	70	70	92¾	1/2	156	1390
CM-156-75	$7233	70	70	92¾	3/4	156	1435
Low Temp							
CL-5-75	$5873	62	49	89¾	3/4	95	880
CL-5-100	$6177	62	49	89¾	1	95	880
CL-156-100	$8369	70	70	92¾	1	156	1410
CL-156-200	$9089	70	70	94¾	2	156	1460
Shelving - 3 Tier - 3 Wires							
33-01375	$756	For CM-3 or CL-5					80
33-01425	$1044	For CM/CL-156					140

*Height includes weatherhood

17-00547 Electric Condensate Evaporator $202

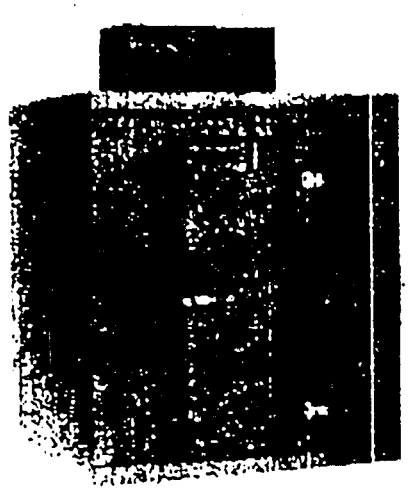

CL-156-200

Sales: 1-800-647-1284 Parts/Service: 1-800-684-898

75

Prices Subject to Change Without Notice
Effective October 1, 1994

Extra Large, Medium/Low-Temp Step-In Coolers and Freezers

Bigger than an ordinary step-in, but just as rugged and even more economical for backroom refrigeration needs.

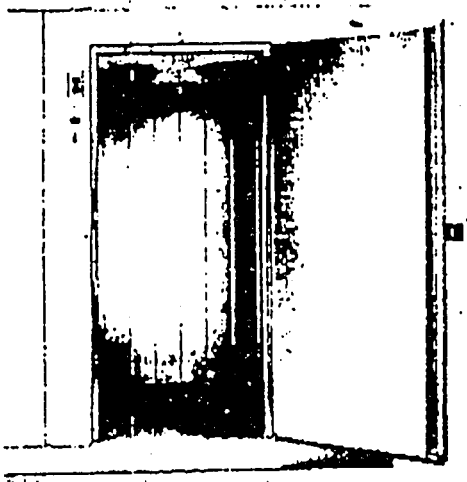

One Size These extra large Master-Bilt Step-In Coolers or Freezers are available in a 156 cubic foot capacity cabinet. They are shipped knocked-down and require no more headroom than a standard 8-foot ceiling for installation. Master-Bilt's modular panel construction and special cam-lock panel locking connectors allow fast, easy assembly in about 30 minutes. Double neoprene wall, floor and ceiling panel gaskets assure a tight, leakage-resistant, panel-to-panel fit. Cabinet exterior is a tough, easy-to-clean, stucco-patterned galvanized steel finish for long life. Stucco finished interior walls and smooth finished floors are also galvanized steel to effectively withstand the wear and tear of day-to-day loading and unloading activities. Dual interior-mounted fans circulate refrigerated air evenly throughout the cabinet. The roof-top mounted refrigeration system and interior fans are factory-tested and installed into the roof panel prior to shipping. A built-in thermostatic temperature control is also provided. Medium temperature range step-in cabinets include hermetic compressors with capillary tube metering devices. Low temperature range step-in cabinets use semi-hermetic compressors with expansion valve, automatic defrost and defrost termination/fan delay control.

Doors The doors on these extra large Master-Bilt Step-In Coolers and Freezers feature the same galvanized steel exterior and wear-resistant galvanized steel interior finish as the cabinet itself. Heavy-duty, perimeter, magnetic gaskets provide a secure, air-tight seal. Sturdy, chrome-plated, high-pressure, die-cast door hinges are spring-loaded and easily adjustable. Doors open with fingertip ease and are also fitted with a heavy-duty, chrome-plated, cast, pull-handle door opener equipped with a sturdy, tamper-resistant cylinder lock. An easy-to-use, inside door safety release prevents accidental lock-in. The large 28" x 63" door opening on these cabinets provides convenient access to the cabinet interior. Door openings also include a total perimeter warming cable to prevent door freeze-ups. An exterior-mounted, digital thermometer is also provided to monitor interior cabinet temperature.

Lighting Interior cabinet lighting on these step-ins is provided by a moisture-proof, interior lamp with a shatter-resistant, protective glass cover for visibility and safety. A handy ON-OFF light switch is provided next to the door on the cabinet exterior wall and includes a pilot indicator light.

Insulation The galvanized steel-clad panels used in these Master-Bilt step-ins feature 4" of high-density rigid, foamed-in-place Urethane foam insulation with a 97% closed cell content to prevent moisture pick-up. Floor panels have the same insulation as walls and ceiling for maximum energy efficiency.

Accessories Master-Bilt also provides electric condensate evaporators and handy welded wire shelving as accessories to these step in back room cabinets.

These heavy-duty cabinets are designed to transform simple back room storage space into a reliable medium or low temperature refrigeration capability for handling frozen foods, ice cream, dairy products, beverages, meat products and, more-efficiently, effectively and economically - and, they are Master-Bilt.

DIMENSIONS

INTERIOR WIDTH	INTERIOR DEPTH	INTERIOR HEIGHT	EXTERIOR WIDTH	EXTERIOR DEPTH	EXTERIOR HEIGHT*
62"	62"	70"	70"	70"	78"
62"	62"	70"	70"	70"	78"

*Add 13" for roof-mounted refrigeration unit hood.

DOOR OPENING WIDTH	DOOR OPENING HEIGHT	CUBIC FEET
28"	63"	156"
28"	63"	156"

SPECIFICATIONS

	TEMP. RANGE	H.P.	VOLTS	FL AMPS	SHIP WT.-LBS
0	+35° to +45°	½	115/60/1	10.3	1280
5	+35° to +45°	¾	115/60/1	17.3	1310
0	+10° to −5°	1	115/208-230/60/1	13/8.3	1398
0	+10° to −5°	1½	115/208-230/60/1	15/10.3	1448

*Extra Heavy Duty.

PRODUCT HOLDING CAPACITIES

	MILK CASES	BEER CASES	FROZEN FOOD CASES 8"x9"x13"	FROZEN FOOD CASES 8"x9"x16"	ICE CREAM ½ GAL.
6	80	204	—	—	—
5	—	—	168	126	1584

Specifications subject to change without notice.

MASTER-BILT PRODUCTS
Highway 15 N. • New Albany, Mississippi 38652
Phone 601/534-9061 • Telex 53-3140 • Telefax 601/534-6049

76

BEST AVAILABLE COPY