PN ABX-495

ANNUAL REPORT

November 1995
Covering Period: November 1994-October 1995

Submitted to the Office of the Science Advisor
U.S. Agency for International Development

Quantitative Assessment of Pollution and Recharge Sources to the Groundwater of the Alma-Ata Basin

Principal Investigators: E.M. Adar, A. Yakirevich & A.S. Issar
Grantee Institution: Ben-Gurion University of the Negev,
J. Blaustein Institute for Desert Research,
Israel

Collaborators (Principal Investigators): A. K. Djakelov & V.V. Veselov
Institution: Institute of Hydrogeology and Hydrophysics of
Kazakhstan Academy of Science,
Kazakhstan

Project Number: BGU 88353
Grant Number; TA-MOU-CA13-059

A.I.D. Grant Project Officer:_____

Project Duration: 10 August 1993 - 31 August 1996

TABLE OF CONTENTS

		Page
EXECUTIVE SUMMARY		3
SECTION I		4
Note on Publication		4
A)	Research Objectives	4
B)	Research Accomplishments	4
C)	Scientific Impact on Collaboration	9
D)	Description of Project Impact	9
E)	Strengthening of Developing Country Institutions	10
F)	Future work	10
SECTION II		12
A)	Managerial Issues	12
B)	Budget	12
C)	Special Concerns	12
D)	Collaboration, Travel, Training and Publications	12
E)	Request for A.I.D. or BOSTID Actions	12
APPENDIX		13

EXECUTIVE SUMMARY

This research project is aimed to elaborate on a very critical issue: that is to identify and quantify the groundwater resources and the sub-surface flow system of the Alma-Ata basin. It is concerned with one of the most acute problem which Kazakhstan and most other Central Asia Republics are facing, namely, the deterioration of groundwater quality due to pollution and over exploitation of the aquifers. To solve the problem it requires to elaborate on the sources of recharge, hydraulic connections between sub aquifers, and the identification of potential contamination of water bearing layers by anthropogenic pollution. When the project began (1994), up to two upper aquifer sections were already out of the production due to deteriorating water quality. The scientific objective of the project is to apply and adapt a new methodology and model, based on environmental tracers, for identification and quantitative evaluation of sources of pollution in the Alma-Ata groundwater basin.

During the first year of the project the main activities of the teams focused on the assessment of the groundwater flow system, which also includes collection of available hydrological and hydrochemical data. Later this information was utilized in a multi variable statistical cluster analyses to discretize the aquifer into distinguished bodies of groundwater. Preliminary results obtained from cluster analyses confirmed the known subdivision of the multi aquifer system, and suggested on further discretization within each sub-layer according to the spatial hydrochemical distribution. During the following year the extension of the suggested water bodies were examined and validated against existing geological and hydrological information (Kazakhstan team). At this stage a three-dimensional model of interconnected mixing cells was formulated (both Israeli and Kazakhstan teams).

Up to this stage both sides made progress along the research as suggested in the research proposal. However, as an active research which depends on field and laboratory activities, it has been suffering from limited sampling capacity and old analytical facilities in Alma-Ata. Micro elements are still available for only part of the observation holes and not sufficient to be included in the numerical model. Yet, the micro elements have been used in the multi variant cluster analyses for aquifer discretization and allocation of potential sources. A new data set of stable isotopes concentration for springs and wells on the mountains and along the boot hills was obtained. However, lack of stable isotope data for alluvial wells limited its use in a quantitative identification. Hence, so far all numerical simulations (Israeli team) were done using only macro elements concentration data. The intermediate results of numerical simulations and experimental investigation clearly indicate the possibilities of hydraulic connections between productive sub aquifers and highly contaminated water bodies. Therefore, the Kazakhstan team suggested a new set of tests and hydrochemical analyses to confirm numerical findings. In the following a complete set of results from the numerical model is presented. However, at this stage until the results will be validated in Alma Ata, we do not do not consider it as a final conclusion of our project. It might well be necessary to include more elements (tracers and/or environmental isotopes) to reach the final conclusion.

SECTION 1

Note on Publication

None so far

A) Research Objectives

So far during the research , the investigators did not see any need to change or modify the research objectives and they remain as stated in the original proposal:

1) To apply and adapt a new hydrochemical models aimed for the quantitative identification of sources of pollution in regional groundwater basins.

2) To make use of existing data concerning local environmental tracers for estimation of inflows and aquifer parameters.

3) Allowing inexpensive assessment of groundwater system especially for basins with scares hydrological information.

B) Research Accomplishments

Based on the hydrogeological evaluation of well logs and geological cross-sections, the groundwater basin of the Alma-Ata was divided into 5 sub-aquifers (levels 1 to 5). Following the hydrochemical analyses each aquifer was divided into cells (compartments), using the results of the hydrochemical cluster analyses. The model allowed to identify water and solute fluxes between cells, sub-aquifers, and sources of pollution. This report elaborates on results obtained from each sub-aquifer. Relevant complete computer outputs on which the assessment was based are given in the attached Appendix.

Aquifer 1 (level 1).

Six cells are assigned for level 1. The schematic cell boundaries and the location of the associated observation and production wells are illustrated in Fig. 1. Level 1 represents

a phreatic aquifer which is currently is not under massive water extraction. Therefore, pumpage from all cells is practically zero. However, significant outflows downstream is expected. A schematic flow pattern for scenario I of the level 1 is given in Fig. 2, including all potential inflows (recharge) and internal flow configurations. Outflows from cells 3, 5, and 6 were estimated on the basis of Darcy's approach utilizing known transmissivities and piezometric heads as indicated in Fig. 1. The outfluxes estimated for boundary cells 3, 5 and 6 were 4830, 400, and 1070 m3/day, respectively. These data and the average macro elements' concentrations in each cell were used as input in the inverse model to solve for fluxes and sources. At this iteration (scenario I), we analyzed the flow system in Level 1 as separated and isolated water bearing layer. Results showed a significant error water balance with water deficiency between 50 and 75 % . No matter what adjustment and flow modification we imposed on the flow pattern the error remained high beyond any sufficient water balance adjustment. Therefore, an additional source was assigned as upward leakage from level 2 into four compartments (3, 4, 5, and 6) in the lower basin (scenario II). The modified schematic flow pattern that include upward leakage form Level 2 (L2) is shown in Fig. 3.

The calculated inflows (m3/day) were: cell 1: recharge from rivers - 300, polluted inflow (source #1) - 75; cell 2: mountain front recharge and rivers - 80, pollution (source #2) - 25; cell 3: mountain flows and rivers - 1340, upward inflows from level 2 - 2970; cell 4: pollution (source #4) - 40; Inflows from level 2 - 450; cell 5: Inflow from level 2 - 370, pollution (sources #5 and 6) - 50; cell 6: Inflow from level 2 - 920. The calculated fluxes between cells are (m3/day): from 1 to 6 - 325; from 2 to 6 - 65; from 4 to 3 - 480; from 4 to 6 - 75; from 5 to 1 - 10.

The most attracting finding is that cell 4, though located close to the foothills, does not receive direct contribution from floods. This weird observation might not be true. However, if the polluted source # 4 is mainly recharged from floods, it will carry most of the mass flow of flood water as a combined input into cell 4. (Such observation was studied with synthetic data in Adar et al. 1988). A similar argument might be hold for Cell 6, but it might also reflect the negligible direct deep percolation from floods in the lower basin. Another peculiarity is the zero flux from cell 4 to 5. This might be simply attributed to negligible stream lines leading from Cell 4 to Cell 5, or it is due to the limited outflows assigned to Cell 5. Another possibility is that cell 5 does not have such large extension and

its upper part belongs to cell 6 or even to cell 1. In scenario III level 2 was introduced also to cell 2. In this case source 2 was totally eliminated (25 in scenario II) and L2 reached almost 5 m3/day. The rest of the components are almost the same as in scenario II.

Aquifer 2 (level 2).

Insufficient information on the chemical distribution within Level 2, eliminated the possibility to discretize this subaquifer into cells. However, the average macro-elements concentrations of this sub-aquifer were used to elaborate on the possibility that either due to piezometric gradient or due to heavy pumping, level 2 leaks to aquifers 1 and /or 3. As already demonstrated in Level 1, L2 terms were introduced also to aquifers 3, and 4. This potential contribution was assigned based on the map of piezometric heads (Fig. 4) showing higher heads than in levels 1,3 & 4.

Aquifer 3 (level 3).

Seven cells were assigned to sub-aquifer 3. The schematic cell configuration is illustrated in Fig. 5. The outfluxes from cells 2, 5 and 6 were evaluated on the basis of Darcy's approach utilizing known transmissivities and piezometric gradients similar to those shown in Fig. 1. The estimated outflows for boundary cells 2, 5, and 6 were 36000, 30000 and 20000 m3/day, respectively. The assigned pumpage values (obtained from the established common data base) from cells 2 to 7 were 45000, 28500, 57800, 31900, 50600 and 42300 m3/day, respectively.

In the first iteration, we analyzed the flow system in Level 3 as an isolated sub-aquifer. This is the initial measure to examine the feasibly of a separated water bearing unit. Results for various flow configurations showed a significant error water balance between 40 to 50 % . No matter what adjustment and flow modification we imposed on the flow pattern, the error remained high beyond sufficient water balance adjustment. In fact, Level 3 represents a semi-confined aquifer which is currently under massive water extraction. Hence it is possible that leakage of contaminated water reaches this aquifer from above due to a decrease of piezometric head. Therefore, an additional source (L2) was assigned as a downward leakage from level 2 into the most heavily pumped compartments 3 to 7. This flow system is illustrated in the schematic flow pattern shown in Fig. 6. With the option of downward leakage from level 2, the total water error balance

was decreased to 6.8%, which confirmed the hypothesis of enhanced leakage into this aquifer. The last modification of the flow system was done after the simulation for level 4 had performed. As we shell see bellow, a reasonable results with a small deficiency water balance for aquifer 4 could be obtained only in the case of its interconnection with level 3. A substantial inflow from Level 3 was noticed: 810, 20100, and 14390 m3/day for cells 3, 5, and 7, respectively. The calculated (in simulations for level 4) outflows from level 3 were then included in the modified compartmental setup as illustrated in Fig. 7. This scenario reduced the water balance error to only 4.1%.

The calculated inflows in m3/day are: cell 1: streambed infiltration (rivers)- 7930; cell 2: no external inflows were assigned. The Piezometric head in both Levels 3 and 2 are almost the same; cell 3: streambed infiltration - 39700, Leakage from level 2 - 1180; cell 4: streambed infiltration - 52970, downward leakage from level 2 - 11550; cell 5: streambed infiltration - 93560, leakage from level 2 - 6930; cell 6: level 2 - 62570; cell 7: streambed infiltration - 19610, level 2 - 49450. The calculated fluxes between cells are (m3/day): from 1 to 6 - 6210; from 3 to 4 - 0; from 3 to 6 - 13750; from 4 to 5 - 0; from 4 to 6 - 11620; from 6 to 2 - 56240; from 7 to 4 - 0; from 7 to 5 - 10110.

Aquifer 4 (level 4).

The hydrochemical analysis allowed to divide this sub-aquifer into six cells as shown in Figure 8. The outfluxes estimated for boundary cells 1, 2, and 6 were 11400, 14040 and 14300 m3/day, respectively. The assigned pumpage values (on the basis of the established common data base) from cells 1 to 6 are 17670, 7040, 17900, 500, 6650, and 22000 m3/day, respectively.

The schematic flow pattern of level 4 as a first iteration of an isolated sub-water bearing layer is given in Fig. 9, including all potential inflows (recharge) and internal flow configurations. Results showed a significant error water balance up to 60 and 75 %. Following the idea of potential deep percolation from runoff at the top the alluvial fans we introduced the streambed infiltration as a potential source (R). No matter, however, what flow modifications we imposed on the flow pattern, the error remained high beyond sufficient water balance adjustment. Therefore, instead of streambed infiltration, an upward leakage from level 5 was assigned into all aquifer compartments. This modification is indicated with L5 (for Level 5) in the schematic flow pattern shown in Fig. 10. Tough, the

water error balance was decreased to 40%-50,. it still remained too large to be accepted. Level 4 represents a semi-confined sub-aquifer which is currently under massive water extraction. Therefore, one should also consider a possible leakage of water from above. Water in cells 1 to 5 have much higher concentrations of macro components than that in cell 6. Hence, a diluting source had to be introduced into the system. Downward leakage from Level 3 turned to be the only feasible source. The downward water flux from level 3 to level 4 seems to be possible due to heavy pumpage in level 4 and a decrease of piezometric head in it. This modification is indicated with L3 (for Level 3) in the modified schematic flow pattern shown in Fig. 11. Cell 5 in level 4 with a very low water concentration is situated on the mountain hills, and it is currently not under pumpage. Therefore, the leakage from level 3 to level 4 in this region is unlikely. Including source terms from level 3 in the compartmental setup of level 4 allowed to decrease water mass balance error down to 8%. That following results were the best optimized solution we could obtained.

The calculated inflows in m3/day are: cell 1: level 5 - 9850, level 3 - 20100; cell 2: level 5 - 20480, level 3 - 11670; cell 3: level 5 - 15790, level 3 - 2720; cell 4: level 5 - 2550, level 3 - 810; cell 5: level 5 - 11340; cell 6: level 5 - 17350, level 3 - 4740. The calculated flows between cells are (m3/day): from 1 to 6 - 0; from 2 to 1 - 0; from 2 to 3 - 15060; from 4 to 1 - 0; from 4 to 6 - 0; from 5 to 6 - 6110. Computed interflows between cells 1 and 6, 1 and 2, 4 and 6 were equal to zero probably due to the fact that gradients of piezometric head between these cells are close to zero too (Fig. 8). Alternatively, it could be an outcome of too high pumping values assigned to those cells.

Aquifer 5 (level 5).

Insufficient information on the chemical distribution in Level 5, eliminated the possibility to discretize this level into cells. However, the average macroelements concentrations of this sub-aquifer were used as a possible source terms leaking into aquifers 4. This potential contribution was assigned based on the map of piezometric heads for Level 5 (Fig. 12) showing the potential of upward leakage.

C) Scientific Impact on Collaboration

During the reporting year the Israeli team (Dr. E. Adar, Dr. A. Yakirevich, and Eng. G. Keidan) accomplished the following functions:

1) Management of the Project: establishment of research facilities, mainly hardware, for the Kazakhstan team; initiation of computer simulations and data analyses;

2) Adjustment of the flow system within each aquifer: cells, inflows, sources of pollution, rates of pumpage according to preliminary results from model simulations;

3) Adjustment of multi-aquifer mixing cell flow;

4) Mixing cell flow simulation for each layer.

The Kazakhstan team (Prof. A. Djakelov, Prof. V. Veselov, and Dr. V. Mirlas) were involved with the following activities:

1) Hydrogeological justification for aquifer discretization as obtained by the multi-variables (chemical) cluster analyses;

2) Collecting of additional required data and information: stable isotopes from water sources over the basin and the mountains, analyses of stable isotopes from wells in Alma-Ata basin.

D) Description of Project Impact

The most striking results are that neither mountain front recharge nor percolation from rivers could not be detected in the upper sub-aquifer sections. The above-mentioned components, however, became significantly pronounced in the deeper layers. This finding may elaborate on a process where as in arid alluvial fans, most of the runoff from the mountainous basins is infiltrated at the top alluvial sections combined of coarse alluvial sediments. This implies that direct recharge form streambed infiltration into the downstream top layers is rarely occurs as floods are strong enough to reach the lower basin sections. Most of the floods percolate into the top alluvial sediments and then further distributed by gravity into all the sub-aquifers which are connected to the upper alluvial section.

So far the achievements in this project actually confirm what we had predicted that applying the new methodology of using environmental shortens the time in which the assessment of the potential of the water resources can be made. In the same time this method enables the identification of the polluting sources, thus enabling also to take the necessary measures to prevent the pollution. Preliminary results of numerical simulations and experimental investigation clearly indicated the possibilities of hydraulic connections between productive sub aquifers and highly contaminated water bodies. The immediate benefit from this to the population in the Alma-Ata basin is the identification and quantifying the hydraulic connections between the sub-aquifers enabling to design future water extraction. Also, it enables to focus on the most sensitive zones prone to future contamination.

E) Strengthening of Developing Country Institutions

This year the allocated fund for the Kazakhstan team was used to strength the basic needs of the Institute of Hydrogeology and Hydrophysics of Kazakhstan Academy of Science. The following items were purchased from the AID/CAD budget during this year:

1) Copier Cannon FC-330;
2) Catriges for Cannon FC-330, for HP 5626A, and for HP LJ IIIP;
3) Ribbons for CPF-136;
4) Mouse 2 button;
5) Diskettes 1.2 Mb - 100, diskettes 1.44 Mb - -200;
6) Printer Switch Box;
7) CD "Encyclopedia";
8) S/W Stylus for Windows;
9) S/W Study English.

All above mentioned items had been acquired via the Ben Gurion University purchasing Department and directly delivered to Kazakhstan.

F) Future work

All of the aforementioned results including detailed results from the inverse computer simulations, suggested on sources of pollution, magnitude of recharge flow

components, and possible hydraulic connections between sub-aquifers were turned to the Kazakhstan team for hydrogeologic verification. Much of the future remaining research depends on the reactions and the evaluation at the Kazakhstan end.

The following work has to be performed in the coming year:

Israeli team:

1) Final adjustment of multi-aquifer cell flow, and simulations of mixing cell flow;

2) Multi-aquifer simulation;

3) Hydrogeological assessment of the results obtained by the mixing cell model (after receiving the results from Kazakhstan).

Kazakhstan team:

1) collecting of additional required data and information: micro components and stable isotopes from production wells in Alma-Ata;

2) Hydrogeological assessment of the results obtained by the mixing cell model;

3) Verification of the result with existing hydrodynamic model.

SECTION II

A) Managerial Issues

None

B) Budget

So far whole expenses are in agreement with the original budget request. Expenditures for equipment ordered by the Kazakhstan P.I. exceeded the budget allotted for this item (-$3555). However, expenditures are still within the limits of the total Kazakh budget.

C) Special Concerns

None

D) Collaboration, Travel, Training and Publications

The collaboration between two teams during last year was through mutual exchange of maps graphs and results through post, fax, telephone and electronic mail. It is supposed, that a member of Kazakhstan team will visit Israel for training and project report completion.

E) Request for A.I.D. or BOSTID Actions

A request for a one year No-cost project extension due to needs of supplementary data and re-evaluating the recent findings was already approved.

Appendix

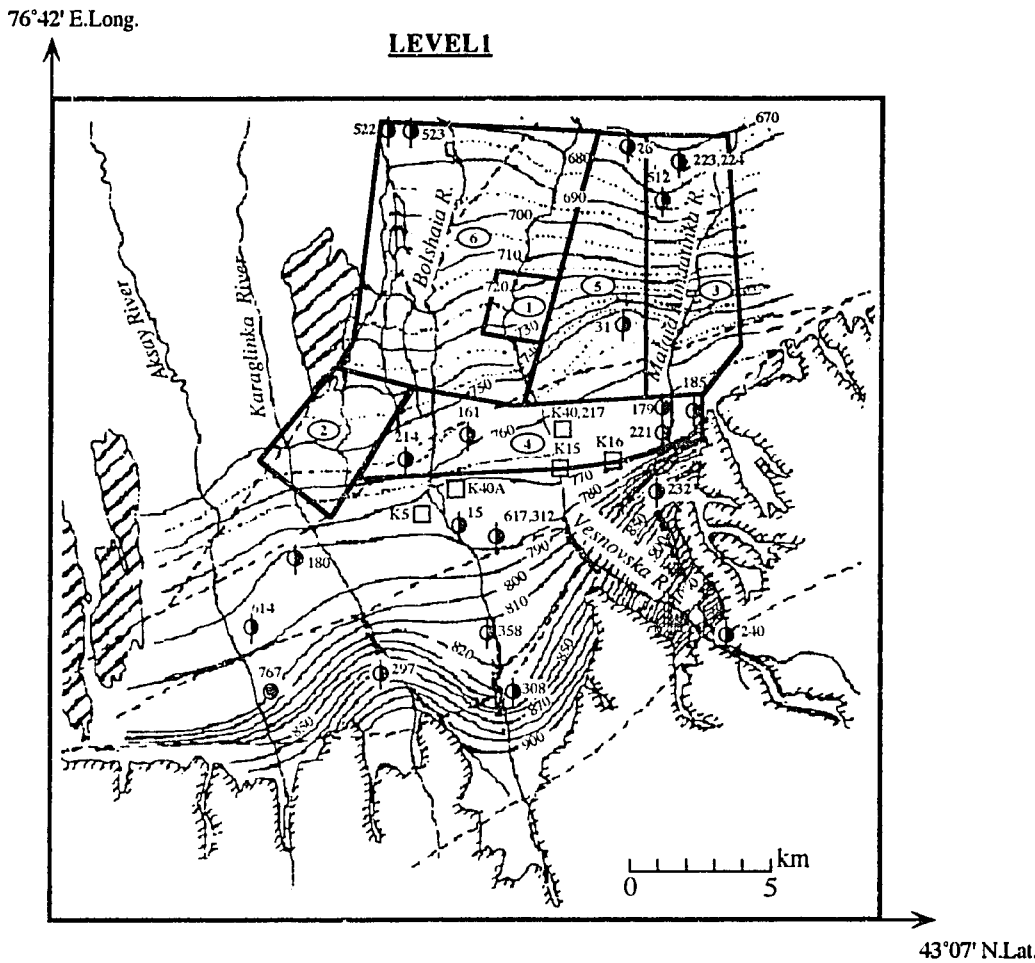

LEGEND

- □ CLUSTER OF PRODUCTION WELLS
- ● PRODUCTION WELL
- ○ EXPLORATION WELL
- ⊕ OBSERVATION WELL
- CELL BORDER
- (4) CELL NUMBER
- 750 PIEZOMETRIC HEAD (m)

Fig. 1- Piezometric head and schematic cell boundaries in Level 1

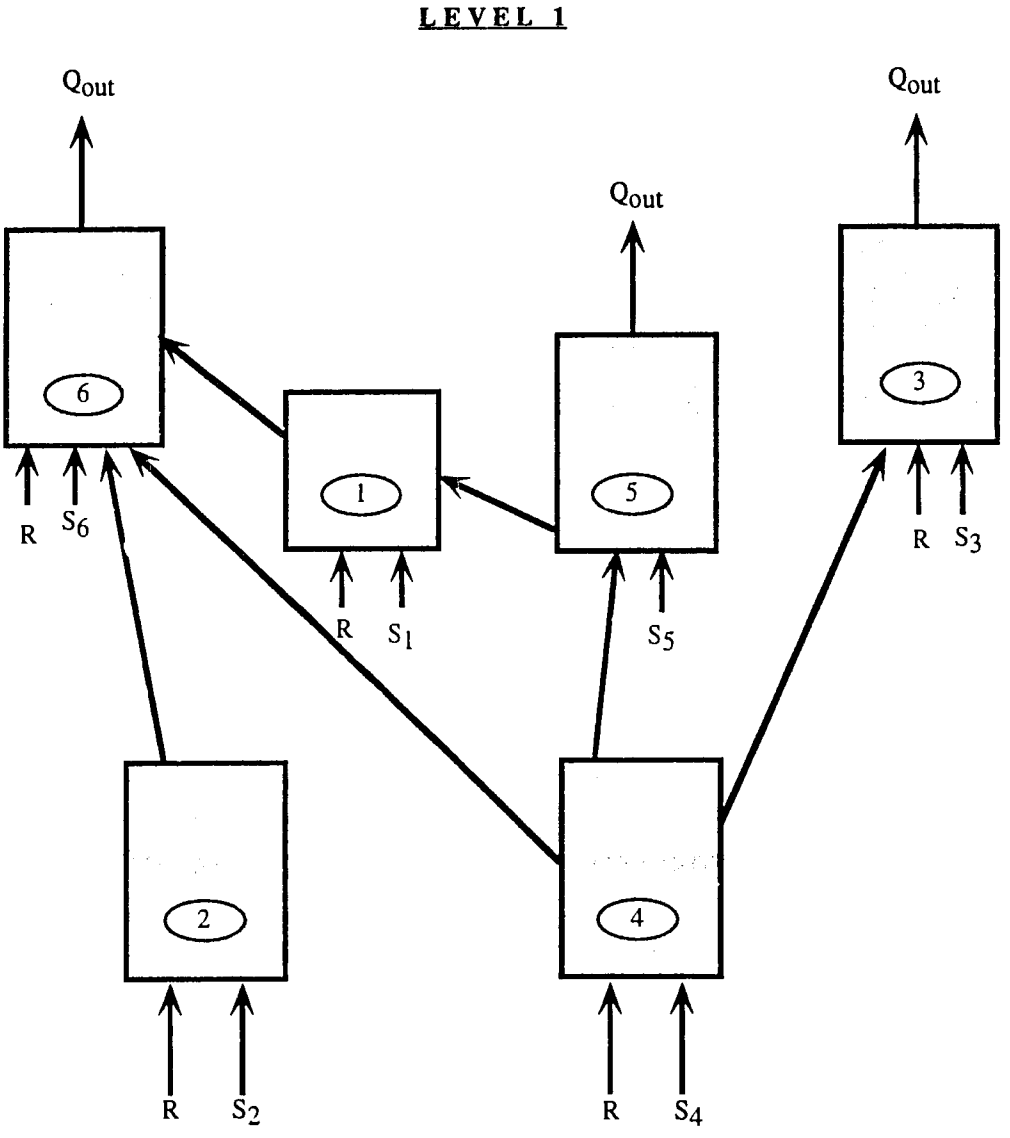

Figure 2 - A schematic flow patterns for aquifer (level) 1 : scenario 1

(1) - cell number
R - potential streambed infiltration
S_i - potential source of pollution
Q_{out} - flow out

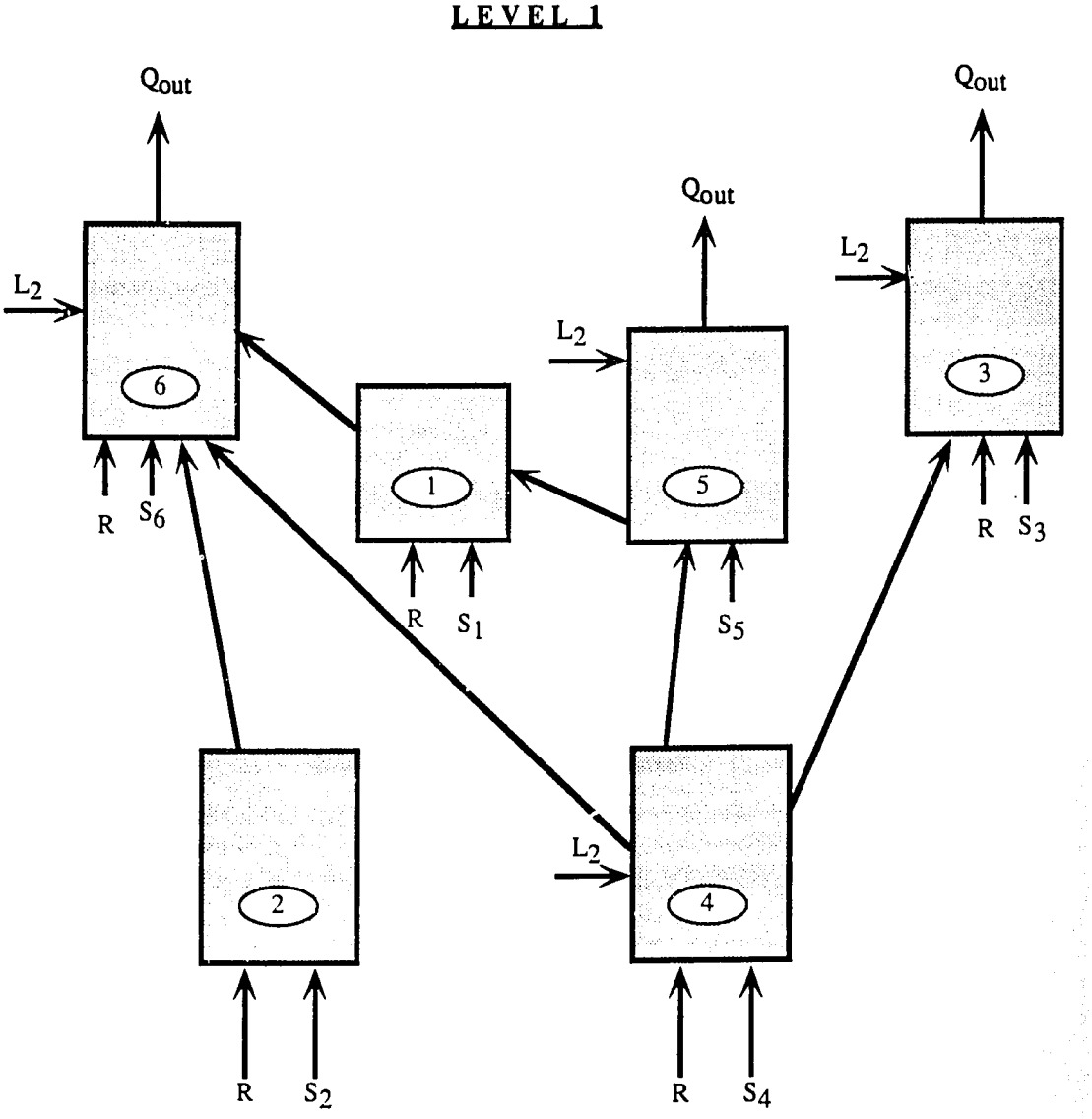

Figure 3 - A schematic flow patterns for aquifer (level) 1: scenario 2

(1) - cell number
R - potential streambed infiltration
S_i - potential source of pollution
L_2 - potential inflow from level 2
Q_{out} - flow out

```
*****************************************************************
** Estimation of flow into and between cells and transmissivities **
**                program  KAZAK                    **
*****************************************************************
Kazakhstan  Model of level 1

 There are  15 potential inputs.
 There are  11 tracers to be considered.
 There are   6 cells in this model.
 There are   6 flows between the cells.

 N = 15  NN = 21  NOC =  6  NOP = 11

 Number of inflows to each cell:

  Num.cell  1  2  3  4  5  6
  Inflows   2  2  3  3  2  3

 Number of internal flows from & into each cell:

  Num.cell  1  2  3  4  5  6
  Interfl.  2  1  1  3  2  3

 The internal flows are:

  From cell  1  2  4  4  4  5
  To cell    6  6  3  5  6  1

 The rate of output (pumpage) and/or evapotranspiration
 out of each cell is [m3/time]:

  PM( 1) =      0.00
  PM( 2) =      0.00
  PM( 3) =   4825.00
  PM( 4) =      0.00
  PM( 5) =    403.20
  PM( 6) =   1071.00
  CONSTANT FOR FLOWS =     62.992
  PM( 1) =      0.00
  PM( 2) =      0.00
  PM( 3) =     76.60
  PM( 4) =      0.00
  PM( 5) =      6.40
  PM( 6) =     17.00
*****************************

 The outflow out of the last cell is [m3/year]:
  QOUT =      0.00


 The input data used in the programm are:

   NAME       TDS     Na     K     Ca     Mg     Cl     SO4     NO3     HCO3     F     H4S04
 1 Rivers     139.150   7.260   1.120  30.710   5.070   4.340  19.970   4.230 108.453   0.718   7.446
 2 S-1        369.000  27.050   9.100  52.000  11.000  32.500  51.000   3.850 268.000   0.650   9.400
 3 Riv.       139.150   7.260   1.120  30.710   5.070   4.340  19.970   4.230 108.453   0.718   7.446
 4 S-2        231.000   3.500   0.750  31.000   3.800  17.500  54.000   6.570 104.000   0.650   8.850
 5 Riv.       139.150   7.260   1.120  30.710   5.070   4.340  19.970   4.230 108.453   0.718   7.446
 6 S-3        396.500  64.850   4.380  50.750  13.500  28.750  48.500  11.230 262.250   0.825  11.175
 7 Level-2    488.670  19.750   4.220 113.500  22.830  28.170  67.170  38.690 315.000   0.580  15.270
 8 Riv.       139.150   7.260   1.120  30.710   5.070   4.340  19.970   4.230 108.453   0.718   7.446
 9 S-4        444.500  34.650   3.590  63.500  10.250  65.250 105.250  13.530 118.750   0.608  11.275
10 Level-2    488.670  19.750   4.220 113.500  22.830  28.170  67.170  38.690 315.000   0.580  15.270
11 Level-2    488.670  19.750   4.220 113.500  22.830  28.170  67.170  38.690 315.000   0.580  15.270
12 S_5-6      913.500  88.030  10.500  40.550  13.500  93.000  68.850   3.820 622.800   0.850  10.620
13 Riv.       139.150   7.260   1.120  30.710   5.070   4.340  19.970   4.230 108.453   0.718   7.446
14 Level-2    488.670  19.750   4.220 113.500  22.830  28.170  67.170  38.690 315.000   0.580  15.270
15 S-6        707.000 115.850  14.840  48.000  22.000 119.500  51.000   6.080 585.500   0.750  16.300
16 cell-1     280.000  43.450   2.150  43.500  23.000  33.000  62.500  23.000 225.000   0.975   6.600
17 cell-2     365.670  21.120   2.050  78.500  21.000  16.670  37.000  21.420 305.667   1.145  17.450
18 cell-3     466.000  15.100   2.200  77.000  11.000  28.500  55.000  32.500 290.500   0.300  17.050
19 cell-4     481.000  18.000   2.030 115.500  15.000  42.750  77.000  77.720 219.750   0.500  11.720
20 cell-5     621.380  48.360   2.580 106.020  35.830  61.050 110.620  31.920 332.214   0.895  15.623
21 cell-6     716.170  34.610   3.350 133.170  52.080  76.960  94.500  62.990 427.792   1.313  12.904
```


17

The weighting parameters are:

1.000 1.000 1.000 1.000 1.000 1.000 1.000 1.000 1.000 1.000 1.000

The unknown inflows are:

	Name of inflow		Rate of inflow	Perc. of tot. inflow	Perc. of cell inflow
Cell 1					
1	Rivers	=	4.7871	4.6 %	80.0 % 301.5503
2	S-1	=	1.1969	1.1 %	20.0 % 75.3924
Cell 2					
3	Riv.	=	1.2463	1.2 %	76.9 % 78.5082
4	S-2	=	0.3742	0.4 %	23.1 % 23.5688
Cell 3					
5	Riv	=	21.3179	20.3 %	31.1 % 1342.8574
6	S-3	=	0.0000	0.0 %	0.0 % 0.0000
7	Level-2	=	47.1352	44.9 %	68.9 % 2969.1388
Cell 4					
8	Riv.	=	0.0000	0.0 %	0.0 % 0.0000
9	S-4	=	0.6813	0.6 %	8.7 % 42.9143
10	Level-2	=	7.1269	6.8 %	91.3 % 448.9406
Cell 5					
11	Level-2	=	5.8735	5.6 %	87.9 % 369.9840
12	S_5-6	=	0.8075	0.8 %	12.1 % 50.8665
Cell 6					
13	Riv.	=	0.0000	0.0 %	0.0 % 0.0000
14	Level-2	=	14.5423	13.8 %	100.0 % 916.0488
15	S-6	=	0.0000	0.0 %	0.0 % 0.0000

The intermediate flows are:

From cell	To cell	Rate of flow	Real number
1	6	5.164	325.30
2	6	1.037	65.32
4	3	7.615	479.71
4	5	0.000	0.00
4	6	1.175	74.03
5	1	0.113	7.10

---------- ----------

Total: 105.089061 100.000000 %

QOUT - PPP = 100.000000

Absolute diff.: 5.089061

Percentage diff.: 5.089061 %

**** Ion balance over the entire basin ***

Id	SUMIN	SUMOUT	Abs. error:	Perc. error:
TDS	41867.355	51847.988	-9980.63	-19.2%
Na	1801.835	2054.603	-252.77	-12.3%
K	367.871	241.985	125.89	52.0%
Ca	9465.745	8840.763	624.98	7.1%
Mg	1876.040	1957.381	-81.34	-4.2%
Cl	2387.379	3882.271	-1494.89	-38.5%
SO4	5770.867	6527.598	-756.73	-11.6%
NO3	3024.354	3764.683	-740.33	-19.7%
HCO3	27433.369	31651.264	-4217.89	-13.3%
F	65.073	51.032	14.04	27.5%
H4SO4	1374.809	1625.375	-250.57	-15.4%

Total salt transport:

Observed output (LB/DAY): 606865.3
Estimated input (LB/DAY): 515061.0

Percent difference between Est. input and Obs. salt output:-15.13 %

18

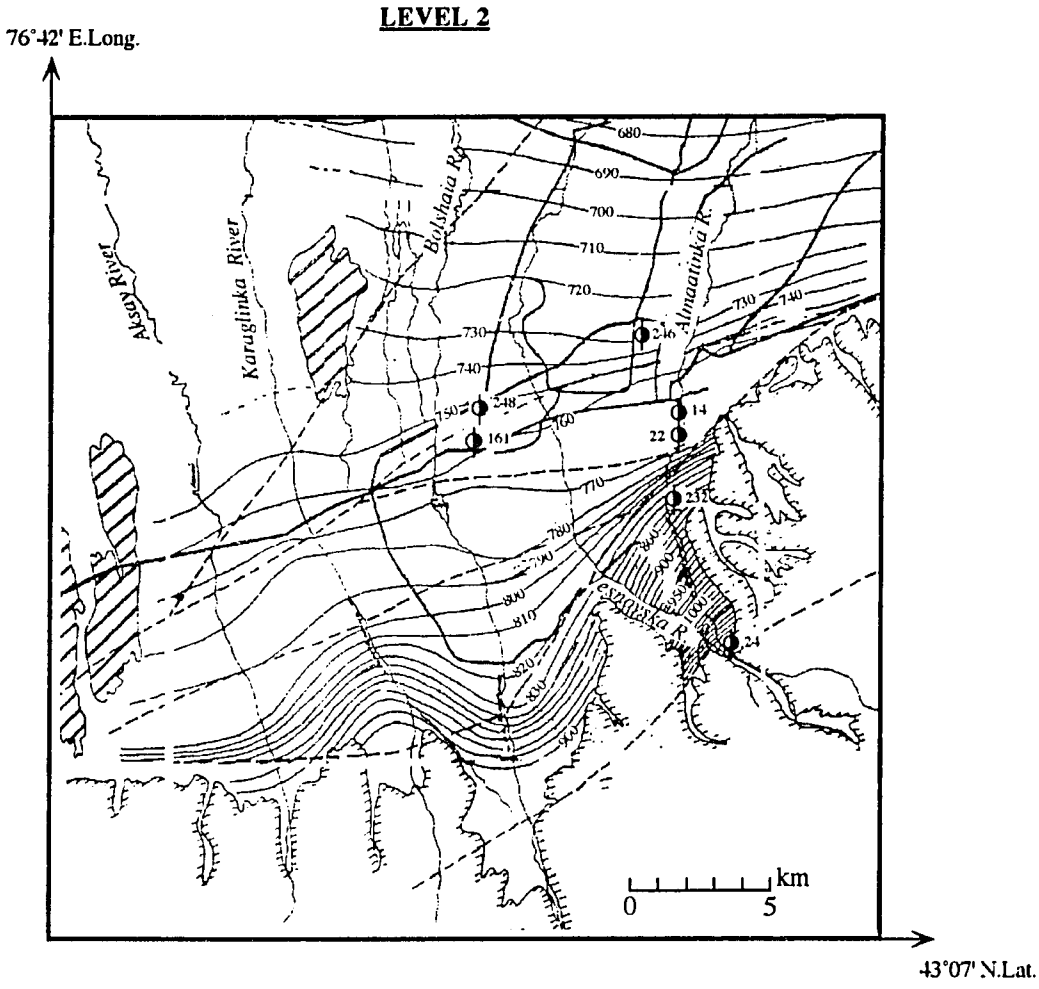

LEGEND

ϕ OBSERVATION WELL

750 PIEZOMETRIC HEAD (m)

Fig. 4 - Piezometric head in Level 2

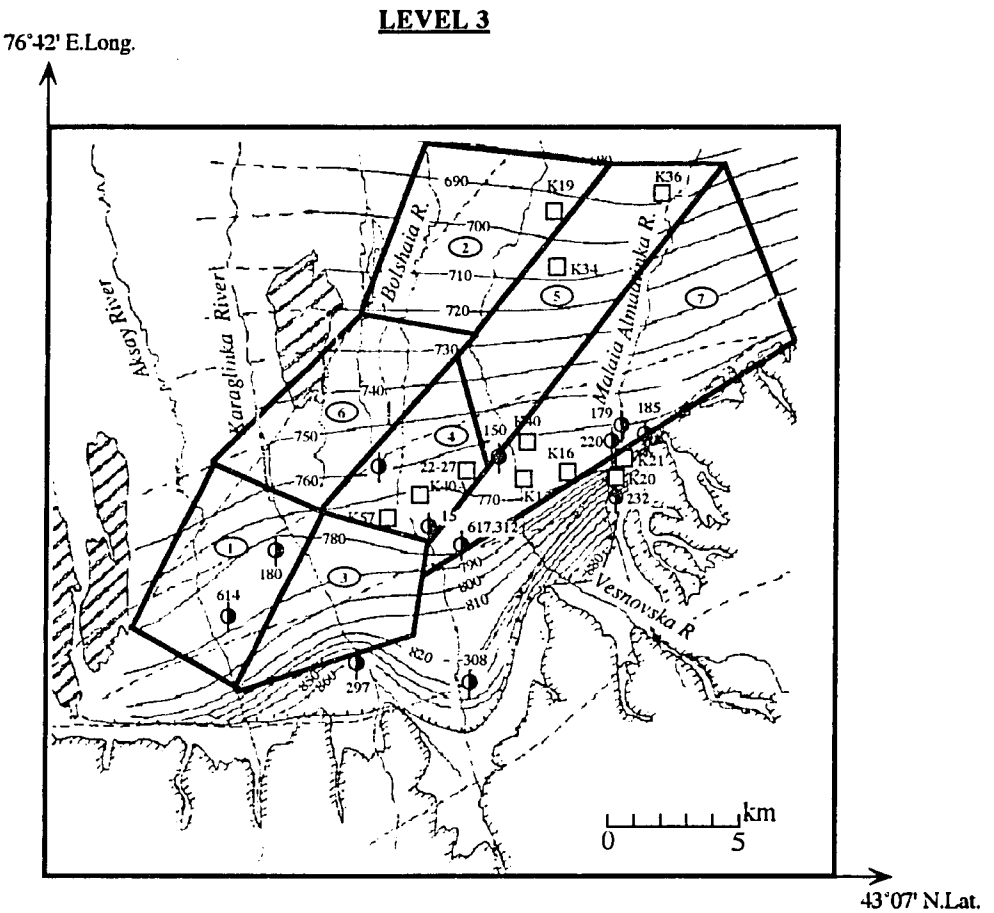

LEGEND

- □ CLUSTER OF PRODUCTION WELLS
- ● PRODUCTION WELL
- o EXPLORATION WELL
- ϕ OBSERVATION WELL
- CELL BORDER
- ④ CELL NUMBER
- 750 PIEZOMETRIC HEAD (m)

Fig. 5 - Piezometric head and schematic cell boundaries in Level 3

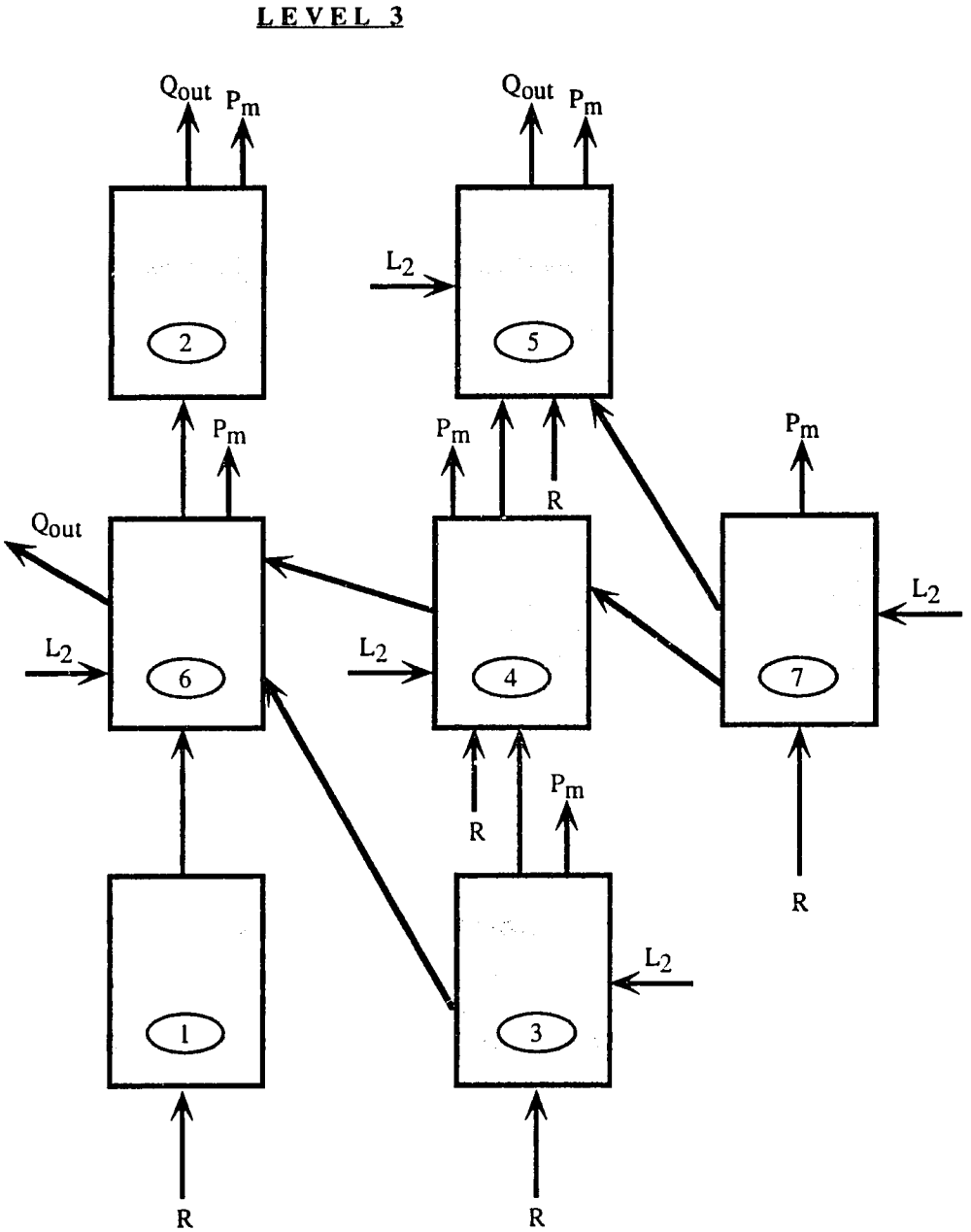

Figure 6 - A schematic flow patterns for aquifer (level) 3: scenario 1

(1) - cell number
R - potential streambed infiltration
L_2 - potential source inflow from level 2
Q_{out} - flow out
P_m - pumpage

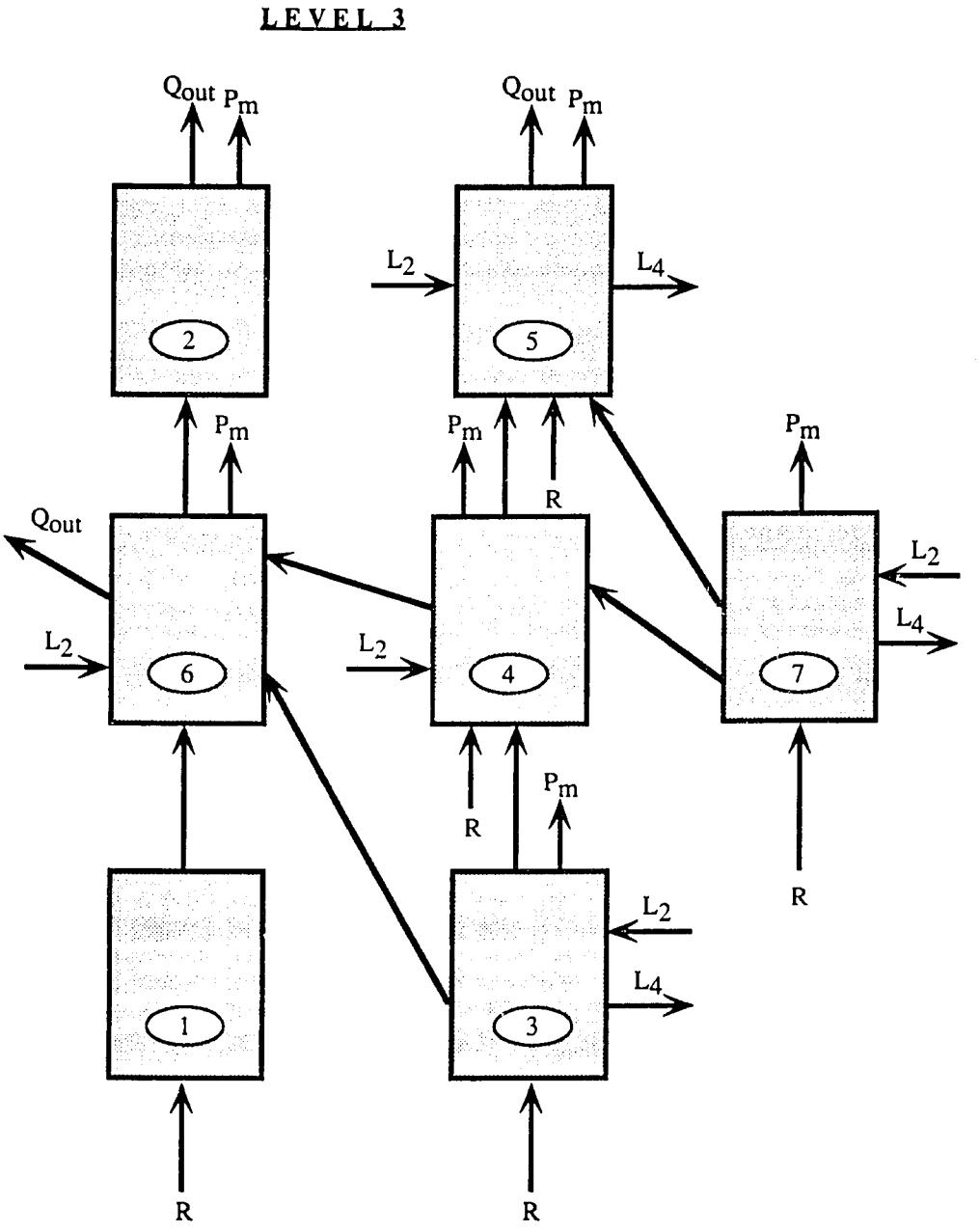

Figure 7 - A schematic flow patterns for aquifer (level) 3: scenario 2

(1) - cell number
R - potential streambed infiltration
L_2 - potential source inflow from level 2
L_4 - out flow to level 4
Q_{out} - flow out
P_m - pumpage

```
*****************************************************************
** Estimation of flow into and between cells and transmissivities **
**                 program  KAZAK                  **
*****************************************************************
```

Kazakhstan: Results for level 3, with outflow to level 4 and inflow from 2

There are 10 potential inputs.
There are 11 tracers to be considered.
There are 7 cells in this model.
There are 9 flows between the cells.

N = 10 NN = 17 NOC = 7 NOP = 11

Number of inflows to each cell:

Num.cell	1	2	3	4	5	6	7
Inflows	1	0	2	2	2	1	2

Number of internal flows from & into each cell:

Num.cell	1	2	3	4	5	6	7
Interfl.	2	1	3	4	2	4	2

The internal flows are:

From cell	1	3	3	3	4	4	6	7	7
To cell	6	1	4	6	5	6	2	4	5

The rate of output (pumpage) and/or evapotranspiration
out of each cell is [m3/time]:

PM(1) = 0.00
PM(2) = 81000.00
PM(3) = 29300.00
PM(4) = 57800.00
PM(5) = 82000.00
PM(6) = 70600.00
PM(7) = 56700.00
CONSTANT FOR FLOWS = 3774.000
PM(1) = 0.00
PM(2) = 21.46
PM(3) = 7.76
PM(4) = 15.32
PM(5) = 21.73
PM(6) = 18.71
PM(7) = 15.02
****

The outflow out of the last cell is [m3/year]:
QOUT = 0.00

The input data used in the programm are:

NAME	TDS	Na	K	Ca	Mg	Cl	SO4	NO3	HCO3	F	H4S04
1 Rivers	139.150	7.260	1.120	30.710	5.070	4.340	19.970	4.230	108.453	0.718	7.450
2 Rivers	139.150	7.260	1.120	30.710	5.070	4.340	19.970	4.230	108.453	0.718	7.450
3 Level-2	488.670	19.750	4.220	113.500	22.830	28.170	67.170	38.690	315.000	0.580	15.270
4 Rivers	139.150	7.260	1.120	30.710	5.070	4.340	19.970	4.230	108.453	0.718	7.450
5 Level-2	488.670	19.750	4.220	113.500	22.830	28.170	67.170	38.690	315.000	0.580	15.270
6 Rivers	139.150	7.260	1.120	30.710	5.070	4.340	19.970	4.230	108.453	0.718	7.450
7 Level-2	488.670	19.750	4.220	113.500	22.830	28.170	67.170	38.690	315.000	0.580	15.270
8 Level-2	488.670	19.750	4.220	113.500	22.830	28.170	67.170	38.690	315.000	0.580	15.270
9 Level-2	488.670	19.750	4.220	113.500	22.830	28.170	67.170	38.690	315.000	0.580	15.270
10 Rivers	139.150	7.260	1.120	30.710	5.070	4.340	19.970	4.230	108.453	0.718	7.450
11 cell 1(1a)	127.200	6.110	1.510	31.200	5.020	5.330	14.560	5.810	105.911	1.180	10.290
12 cell 2(1b)	116.760	11.140	1.730	23.770	5.730	4.430	10.960	2.880	109.585	1.060	15.030
13 cell 3	254.740	7.930	2.770	59.610	12.340	5.190	22.340	18.310	232.886	0.870	15.390
14 cell 4(4a)	229.600	7.230	1.980	55.000	6.380	12.780	17.260	16.690	153.500	0.690	15.000
15 cell 5(4b)	218.940	23.180	1.800	41.250	12.110	9.350	38.390	7.580	173.361	1.040	16.420
16 cell 6(5)	319.570	11.050	2.650	65.270	13.970	15.050	24.860	20.220	232.625	0.410	12.660
17 cell 7(6)	405.700	23.300	2.640	93.000	19.060	20.330	59.020	33.990	270.812	0.620	16.200

The weighting parameters are:

23

1.000 1.000 1.000 1.000 1.000 1.000 1.000 1.000 1.000 1.000 1.000

The rest of the variables are equal to zero.

The unknown inflows are:

	Name of inflow		Rate of inflow	Perc. of tot. inflow	Perc. of cell inflow	
Cell 1						
1	Rivers	=	2.1017	2.2 %	100.0 %	7931.8191
Cell 2						
Cell 3						
2	Rivers	=	10.5227	11.0 %	77.1 %	39712.5893
3	Level-2	=	3.1254	3.3 %	22.9 %	11795.1331
Cell 4						
4	Rivers	=	14.0356	14.6 %	75.1 %	52970.3566
5	Level-2	=	4.6494	4.8 %	24.9 %	17546.7535
Cell 5						
6	Rivers	=	24.7914	25.8 %	93.1 %	93562.6434
7	Level-2	=	1.8367	1.9 %	6.9 %	6931.5903
Cell 6						
8	Level-2	=	16.5785	17.3 %	100.0 %	62567.2516
Cell 7						
9	Level-2	=	13.1021	13.7 %	71.6 %	49447.2940
10	Rivers	=	5.1963	5.4 %	28.4 %	19610.9708

The intermediate flows are:

From cell	To cell	Rate of flow	Real number
1	6	1.644	6205.76
3	1	0.000	0.00
3	4	0.000	0.00
3	6	3.643	13748.97
4	5	0.000	0.00
4	6	3.079	11620.97
6	2	14.902	56240.87
7	4	0.000	0.00
7	5	2.680	10113.78

Total: 95.939693 100.000000 %
QOUT + PPP = 100.000000

Absolute diff.: 4.060307

Percentage diff.: 4.060307 %

**** Ion balance over the entire basin ***

Id	SUMIN	SUMOUT	Abs. error:	Perc. error:
TDS	27083.349	24830.481	2252.87	9.1%
Na	1187.279	1471.803	-284.52	-19.3%
K	229.258	217.306	11.95	5.5%
Ca	6199.293	5329.784	869.51	16.3%
Mg	1184.240	1127.308	56.93	5.1%
Cl	1352.707	1121.230	231.48	20.6%
SO4	3770.498	2858.898	911.60	31.9%
NO3	1759.827	1513.188	246.64	16.3%
HCO3	18520.593	18697.989	-177.40	-0.9%
F	63.462	79.654	-16.19	-20.3%
H4S04	1022.014	1508.779	-486.77	-32.3%

Total salt transport:

Observed output (LB/DAY): 317108.4
Estimated input (LB/DAY): 336624.5

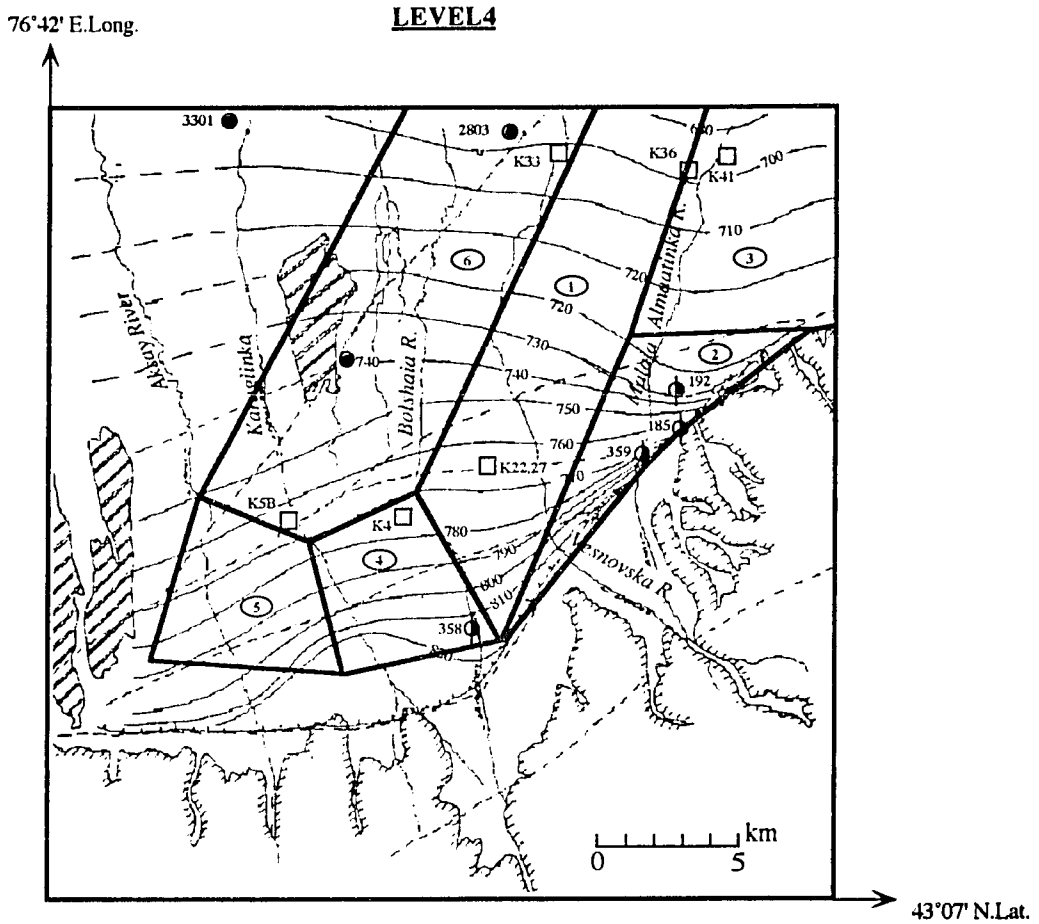

LEGEND

- □ CLUSTER OF PRODUCTION WELLS
- ● PRODUCTION WELL
- o EXPLORATION WELL
- ϕ OBSERVATION WELL
- (5) CELL NUMBETR
- ⟩ CELL BORDER
- 750 PIEZOMETRIC HEAD (m)

Fig. 8 - Piezometric head and schematic cell boundaries in Level 4

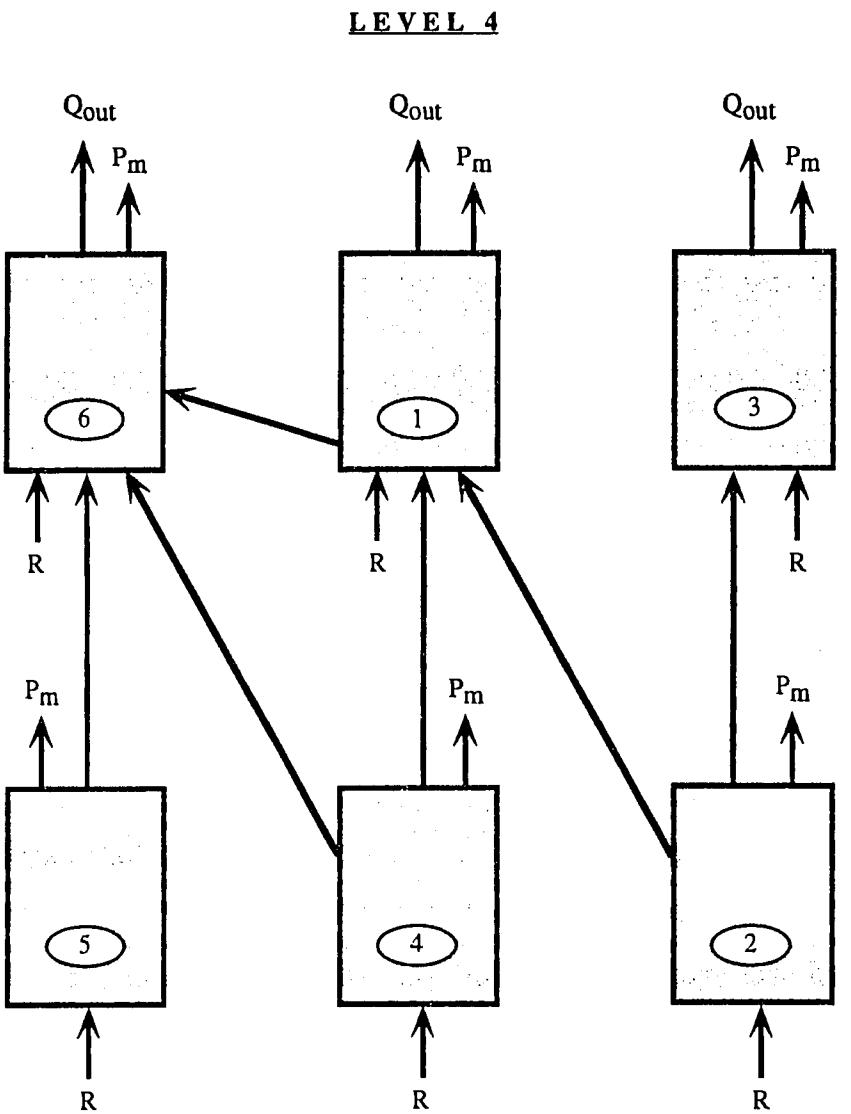

Figure 9 - A schematic flow patterns for aquifer (level) 4 : scenario 1

(1) - cell number
R - potential streambed infiltration
Q_{out} - flow out
P_m - pumpage

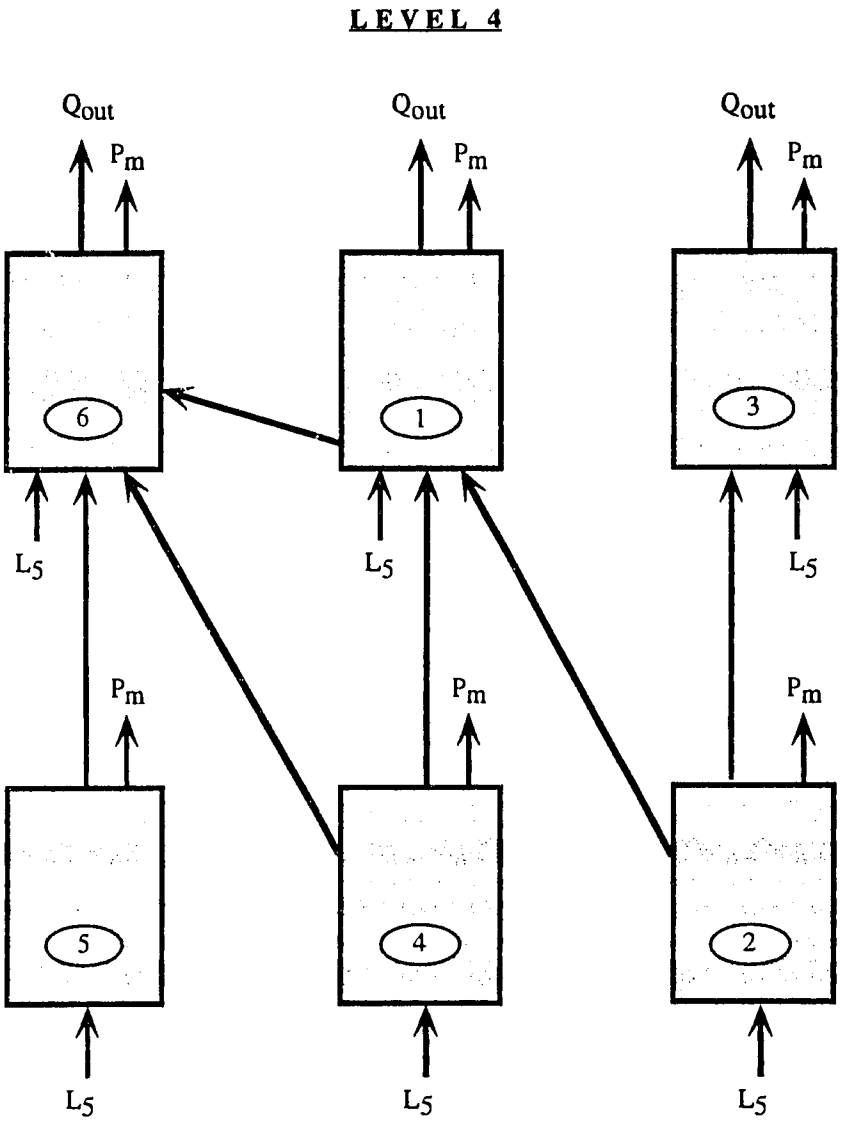

Figure 10 - A schematic flow patterns for aquifer (level) 4 : scenario 2

(1) - cell number
L_5 - potential source inflow from Level 3
Q_{out} - flow out
P_m - pumpage

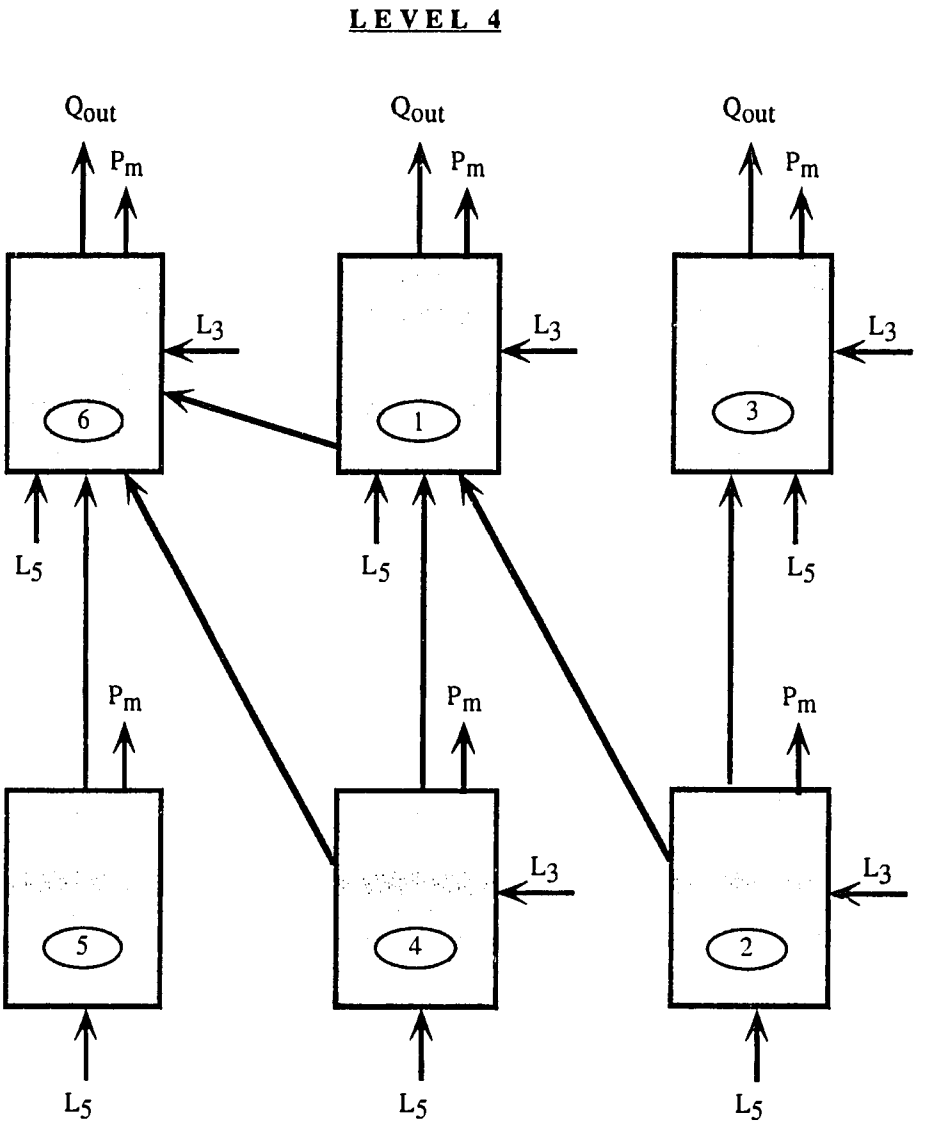

Figure 11 - A schematic flow patterns for aquifer (level) 4 : scenario 3

(1) - cell number
L_3 - potential source inflow from Level 3
L_5 - potential source inflow from Level 3
Q_{out} - flow out
P_m - pumpage

```
*****************************************************************
** Estimation of flow into and between cells and transmissivities **
**                 program  KAZAK                 **
*****************************************************************
```

Kazakhstan Model of level 4 with level 3 and 5

There are 11 potential inputs.
There are 11 tracers to be considered.
There are 6 cells in this model.
There are 6 flows between the cells.

N = 11 NN = 17 NOC = 6 NOP = 11

Number of inflows to each cell:

Num.cell	1	2	3	4	5	6
Inflows	2	2	2	2	1	2

Number of internal flows from & into each cell:

Num.cell	1	2	3	4	5	6
Interfl.	3	2	1	2	1	3

The internal flows are:

From cell	1	2	2	4	4	5
To cell	6	1	3	1	6	6

The rate of output (pumpage) and/or evapotranspiration
out of each cell is [m3/time]:

PM(1) = 29070.00
PM(2) = 7035.00
PM(3) = 31941.01
PM(4) = 500.00
PM(5) = 5870.00
PM(6) = 34300.00
CONSTANT FOR FLOWS = 1087.160
PM(1) = 26.74
PM(2) = 6.47
PM(3) = 29.38
PM(4) = 0.46
PM(5) = 5.40
PM(6) = 31.55

****

The outflow out of the last cell is [m3/year]:
QOUT = 0.00

The input data used in the programm are:

	NAME	TDS	Na	K	Ca	Mg	Cl	SO4	NO3	HCO3	F	H4S04
1	Level5	134.000	8.600	1.600	25.000	5.000	2.000	7.000	1.800	106.000	0.900	21.600
2	Lev3(cell5)	218.940	23.180	1.800	41.250	12.110	9.350	38.390	7.580	173.361	1.040	16.420
3	Level5	134.000	8.600	1.600	25.000	5.000	2.000	7.000	1.800	106.000	0.900	21.600
4	Lev3(cell7)	405.700	23.300	2.640	93.000	19.060	20.330	59.020	33.990	270.812	0.620	16.200
5	Level5	134.000	8.600	1.600	25.000	5.000	2.000	7.000	1.800	106.000	0.900	21.600
6	Lev3(cell7)	405.700	23.300	2.640	93.000	19.060	20.330	59.020	33.990	270.812	0.620	16.200
7	Level5	134.000	8.600	1.600	25.000	5.000	2.000	7.000	1.800	106.000	0.900	21.600
8	Level3(cell3)	254.740	7.930	2.770	59.610	12.340	5.190	22.340	18.310	232.886	0.870	15.390
9	Level5	134.000	8.600	1.600	25.000	5.000	2.000	7.000	1.800	106.000	0.900	21.600
10	Level5	134.000	8.600	1.600	25.000	5.000	2.000	7.000	1.800	106.000	0.900	21.600
11	cell 6(5)	319.570	11.050	2.650	65.270	13.970	15.050	24.860	20.220	232.625	0.410	12.660
12	Cell_1	208.660	15.920	2.070	42.530	7.570	8.600	28.350	9.320	148.890	1.000	20.290
13	Cell_2	363.600	30.080	3.320	70.000	13.200	16.200	66.800	12.310	234.200	0.960	22.560
14	Cell_3	268.950	28.810	2.070	32.630	11.470	13.760	61.860	4.380	161.560	1.180	20.540
15	Cell_4	274.670	29.330	2.970	41.330	7.670	11.670	73.000	4.267	136.000	1.330	18.830
16	Cell_5	107.830	6.330	1.780	25.960	4.740	3.740	9.820	3.140	97.990	1.140	14.920
17	Cell_6	142.960	11.450	1.510	27.660	4.290	4.890	15.210	4.930	105.430	1.230	14.360

The weighting parameters are:

1.000 1.000 1.000 1.000 1.000 1.000 1.000 1.000 1.000 1.000 1.000

29

The unknown inflows are:

	Name of inflow		Rate of inflow	Perc. of tot. inflow	Perc. of cell inflow	
Cell 1						
1	Level5	=	9.0584	8.4 %	32.9 %	9847.9579
2	Lev3(cell5)	=	18.4924	17.1 %	67.1 %	20104.2487
Cell 2						
3	Level5	=	18.8426	17.4 %	63.7 %	20484.8877
4	Lev3(cell7)	=	10.7333	9.9 %	36.3 %	11668.8645
Cell 3						
5	Level5	=	14.5236	13.4 %	85.3 %	15789.5083
6	Lev3(cell7)	=	2.5015	2.3 %	14.7 %	2719.5471
Cell 4						
7	Level5	=	2.3426	2.2 %	75.8 %	2546.8122
8	Level3(cell3)	=	0.7468	0.7 %	24.2 %	811.8561
Cell 5						
9	Level5	=	10.4297	9.7 %	100.0 %	11338.7446
Cell 6						
10	Level5	=	15.9546	14.8 %	78.5 %	17345.2146
11	cell 6(5)	=	4.3604	4.0 %	21.5 %	4740.4477

The intermediate flows are:

From cell	To cell	Rate of flow	Real number
1	6	0.000	0.00
2	1	0.000	0.00
2	3	13.849	15056.61
4	1	0.000	0.00
4	6	1.588	1725.89
5	6	5.618	6107.60

Total: 107.986017 100.000000 %

QOUT + PPP = 100.000000

Absolute diff.: 7.986017

Percentage diff.: 7.986017 %

**** Ion balance over the entire basin ***

Id	SUMIN	SUMOUT	Abs. error:	Perc. error:
TDS	20536.109	21053.046	-516.94	-2.5%
Na	1403.035	1875.699	-472.66	-25.2%
K	195.693	196.269	-0.58	-0.3%
Ca	4101.562	3580.724	520.84	14.5%
Mg	902.088	789.296	112.79	14.3%
Cl	653.772	918.902	-265.13	-28.9%
SO4	2114.189	3574.257	-1460.07	-40.8%
NO3	819.939	632.013	187.93	29.7%
HCO3	15520.341	14161.363	1358.98	9.6%
F	93.912	113.194	-19.28	-17.0%
H4S04	2121.620	1834.276	287.34	15.7%

Total salt transport:

Observed output (LB/DAY): 262990.6
Estimated input (LB/DAY): 261550.8

Percent difference between Est. input and Obs. salt output: -0.55 %

30

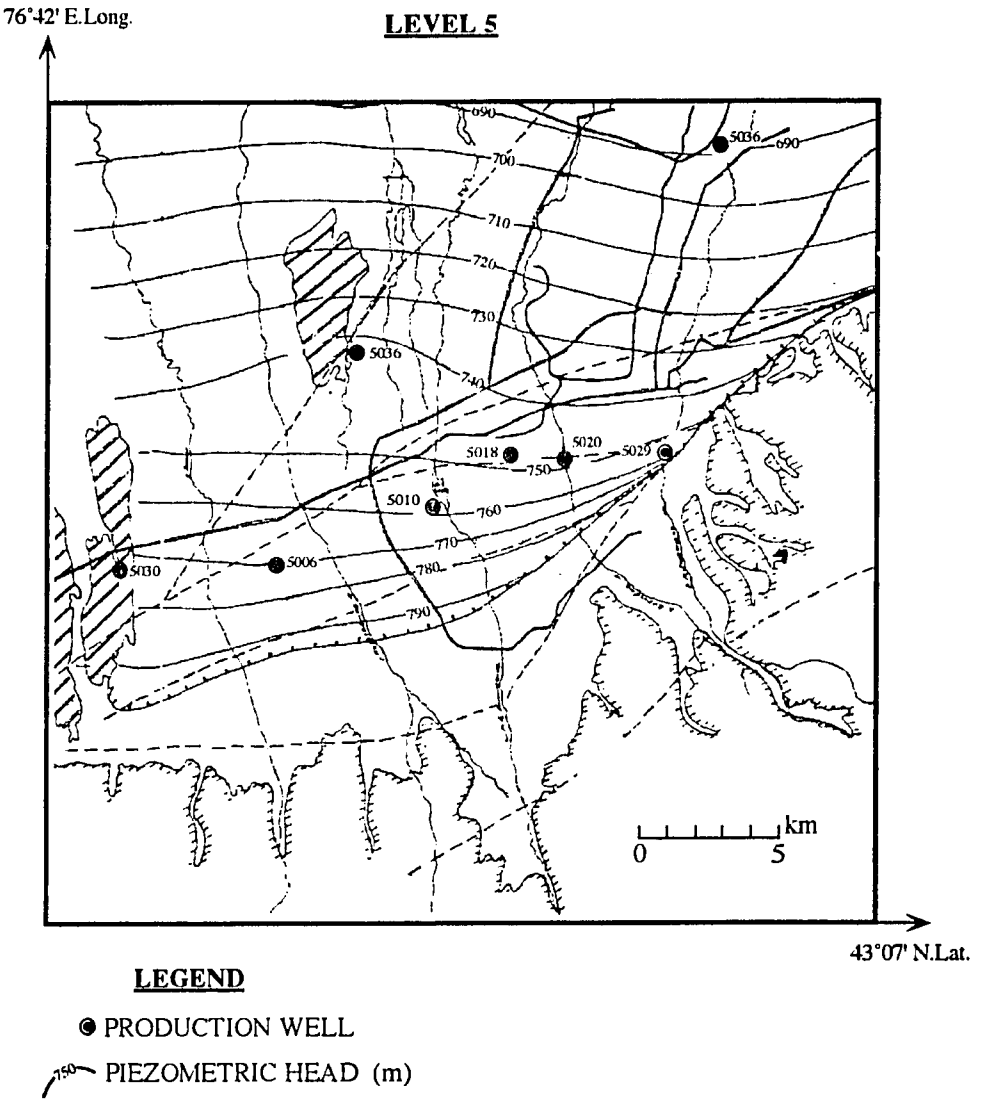

Fig. 12 - Piezometric head in Level 5