— PN-ABX-385

Agri-Business, Production, Processing and Marketing Information News

Issue No 33 April 1995 AgEnt 87-95

HERBS, AROMATIC AND MEDICINAL PLANTS
EXPORT PRODUCTION/MARKETING
WORKSHOP - LANKA OBEROI HOTEL - 6TH APRIL 1995

ABSTRACTS OF KEY NOTE PAPERS PLUS SOME SUPPLEMENTARY REFERENCE ON CULTIVATION AND MARKET CONTACTS IN THE TRADE

Prepared by:

DR TOM DAVIES
AgEnt International Herbs/Allied Products Advisor

AgEnt

HELPING SRI LANKA TO GROW!

AgEnt is a dynamic USAID funded private sector agro-enterprise development initiative successfully assisting companies and entrepreneurs with viable business/marketing plans to expand existing operations or start-up new ventures targeted at both domestic and export markets.

INTRODUCTION

This booklet has been compiled specifically for delegates of the AgEnt workshop on Herbs, Aromatic and Medicinal Plants (6 April 1995).

The contents include abstracts of the presentations given on:

1. The cultivation of aromatic crops with emphasis on culinary herbs.

and 2. The changing market environment for aromatic and medicinal crop products.

Some examples from the range of technical backup that can be provided through the AgEnt BIC to clients in this sector are also included. You should read this booklet in conjunction with other information packages provided by AgEnt at the workshop.

Finally some possible market contacts are listed for dried herbs, spices and essential oils.

THE CULTIVATION OF AROMATIC CROPS WITH EMPHASIS ON CULINARY HERBS

T M DAVIES (HVH)
AGENT PROJECT
COLOMBO
6 APRIL 1995

ABSTRACT

A brief introduction was provided to the scope of plants included and some end uses of aromatic crop products. An analysis of world production reports and principal importing countries was discussed.

A description of popular herbs used in the major importing countries was given and some details of the conditions under which these crops thrive. Distinctions were made between conditions that promote plant growth and those factors that maximise aromatic yield.

Blueprints for herb species cultivation and the factors that influence the type of production system which may best suit individual company requirements were explained.

Quality of production was described, first in terms of the impact from recent EU directives and legislation. Attention was drawn in particular to pesticide approvals, maximum permitted pesticide residue levels then food safety and handling regulations currently affecting aromatic crop products. The implications of non compliance were made clear. Then quality was reviewed as an opportunity for producers who comply and wish to enter these major markets. Another positive opportunity from improved quality was discussed as methods by which the grower/producer could increase quality standards above those required to satisfy legal levels.

Finally a perspective was given on the opportunity producers in Sri Lanka currently have to enter the culinary herb arena.

A short video describing some popular herbs, their cultivation and harvest followed.

THE CHANGING MARKET ENVIRONMENT FOR AROMATIC AND MEDICINAL CROP PRODUCTS

T M DAVIES (HVH)
AGENT PROJECT
COLOMBO
6 APRIL 1995

ABSTRACT

Some recent trends showing growth particularly in the flavour market were discussed including an introduction to some of the essential oils commanding the largest market share. Citrus oils and Mint oils were highlighted together with shifts in production areas of some other oils eg Eucalyptus. Trends in some oil sources were described eg substitution of Lemongrass oil and some reasons for these changes.

Major essential oil products imported into the regional markets of the world (EU, USA and Japan) were discussed together with the growth in medicinal herbs imported in the EU.

A summary of selective market trends in Japan (Aromatic oils) Singapore (Spice trade), US (Spices, Essential oil and Herb supplements) and Europe (New products) was provided.

Attention was drawn to the increasing need and concern for quality in the Export Markets for aromatic products. This was described in some detail first as a vertical snapshot (from growing through harvest, post harvest, processing, packaging and storage elements) of quality. Secondly a horizontal snapshot was described across the industry and regulatory authorities (stretching from grower to customer, the trade level, country standards and legislation plus international standards).

The point was made that future export market opportunities in the aromatic and medicinal plant product sectors were only likely to be available for producers that provided the highest quality products.

A short video on post harvest handling of fresh herbs followed where emphasis was given to satisfying traceability and legal obligations of current food safety regulations affecting herbs in the UK.

ITEM		APPENDICES
1.	Volatile Oil Crops: Their Biology, Biochemistry and Production.	A
2.	Production and Processing of Culinary and Aromatic Herbs.	B1- B2
3.	Primary Processing of Medicinal Plants.	C1 - C3
4.	Temperature and Daylength Influences on the Growth and Germination of Sweet Basil and Oregano.	D1
5.	Cultivation of Dill.	E
6.	Minor Specialist Crop Development and Some Restrictions on Pest and Weed Control for Herbs Grown in Europe.	F
7.	The Current UK Approach to Secure Pesticide Approval for Herbs.	G
8.	Volatile Flavour Components of Coriander Leaf.	H
9.	Postharvest Shelf Life of Sweet Basil.	I1 - I2
10.	Market Contacts. Dried Herbs and Spices Trade.	J1 - J3
11.	Market Contacts. Essential Oils.	K1 - K5

A

Volatile oil crops: their biology, biochemistry and production

Edited by:
Robert K. M. Hay
and
Peter G. Waterman

Longman Scientific & Technical

Production and processing of culinary and aromatic herbs

by Nicolas Verlet
Ministry of Agriculture
Nyons, France

1. General characteristics of the production and the consumption of culinary herbs

Known under various names such as: "herbs, aromatic plants" or "culinary herbs", the 14 plants covered by this presentation have specific technical, economic and end-use characteristics which distinguish them from spices and spice seeds.

Their consumption is mainly concentrated in industrialized countries. They are not traditionally consumed in developing countries, therefore, their large-scale cultivation in developing countries must be based on the existence of potential export markets.

Their cultivation is well adapted to temperate climates; the major consuming countries (in North America, Eastern and Western Europe) are also the main producers of culinary herbs. Therefore new producers/exporters of these products will face competition [1] from the highly mechanized production of European countries and of a small number of developing countries which have already developed a highly competitive, export-oriented production.

A low labour cost will not, in this case, represent a considerable advantage or have a strong influence on the production cost, as the large, industrial, or export-oriented cultivations have minimized their costs by high mechanization.

These plants are cultivated for their leaves and tips. It is possible to mechanize almost wholly of the production process, from cultivation to the delivery of the commercial product. The quality of the final products, defined by commercial standards, is very much dependent on technical aspects of production, such as: selection of planting material, fertilization, weeding (weed killing), drying, sorting, etc. The quality of the final product and the relationship between quality and techniques of cultivation is crucial for culinary herbs (more than in the case of certain spices), because a product which does not comply to a required quality cannot often be sold, not even at a very low, discounted price.

- Besides the market for dry culinary herbs, there exists a market for the fresh products. The market for fresh products is growing fast, driven by the growing demand for deep-frozen herbs, at the expense of dried products. This trend will continue in the future, especially with the development of new processes for extraction of flavours (including biotechnologies), in order to supply the industry with more sophisticated natural products. Agricultural production of culinary herbs will be influenced by these developments.

2. Cultivation techniques for the production of dry leaves and tips

❑ Relationship between production techniques and the quality of products

As already mentioned, cultivation and production techniques have a direct influence on the quality of the commercial products. Several factors determine the properties of the final products:

- Genetically inherited characteristics of the plants, interesting from the quality point of view, will influence the varietal selection of clones. Clonal reproduction will allow the cultivation of the same chemotype and yield products with homogeneous quality;
- Climatic conditions, i.e., type of soil, altitude, day and night temperatures, rainfall pattern, duration of sunlight, influence the plant characteristics to a certain region;
- Weed-killing will avoid the presence of extraneous plants in the final product; the use of pesticides may, however, leave undesirable pesticide residues in the final product;
- Drying is one of the most difficult and critical operations, influencing directly the colour, the

[1] On the contrary, new developing countries producers/exporters of spices are mainly facing competition from other developing countries, often with similar cultural and economic conditions.

Report of Third Meeting of the International Spice Group
Kingston, Jamaica 18-23 November 1991. ITC.

The moving bottom consists of metal bars driven by chains; it allows the harvested crop to be evenly distributed in the bin during the loading and unloading. The machines can be driven by an engine or by a tractor and are particularly well adapted to harvesting aromatic and culinary herbs. They have a capacity of 10 m^3 to 40 m^3 and can harvest fields of 5 ha to 50 ha. Their price varies between US$ 8,000 and US$ 40,000 (see figure 1).

Figure 1 Powered loader - harvester (Riberi - Italy)

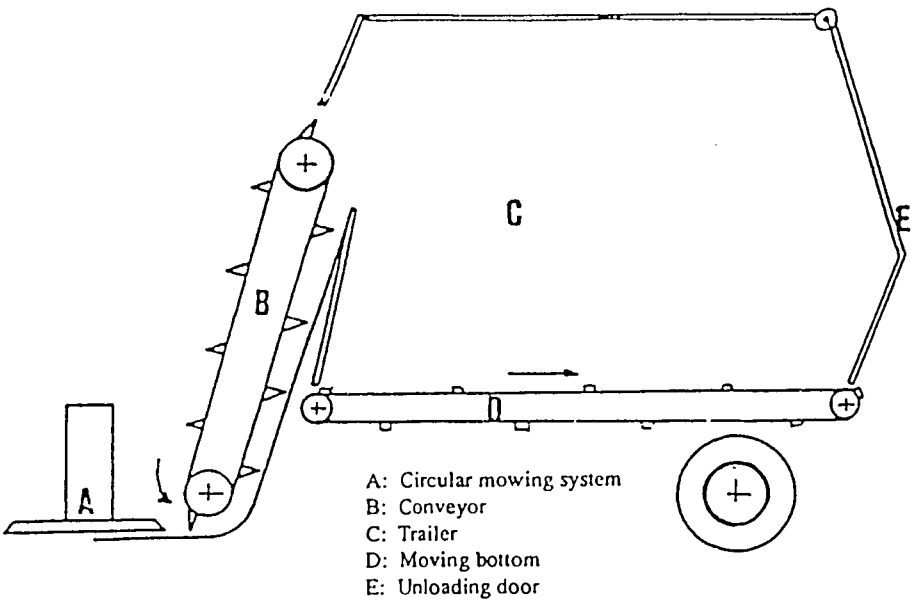

Other prototypes of harvesters have been built for large-scale harvesting, similar to harvesters used for vegetables like spinach.

4. Post-harvesting processing

Leaves are the part of culinary and aromatic herbs which are generally commercialized. Leaves are therefore separated from the stems before or after drying, by one of the following three processes:

Cutting of the aerial part of the fresh plant after harvesting, separation of leaves from stems by air blowing and further drying of leaves (mint);

Washing the harvested plants, fine cutting, drying, separation of stems by blowing (parsley, chives, chevril, tarragon);

Drying of the harvested aerial part of the plant and separation of leaves from stems by mechanical threshing (thyme, rosemary, savoury, marjoram, sage, oregano, basil).

❑ Drying

Drying determines the quality of the final product, i.e., its colour, flavour and bacteriological content. The process can be also very expensive; for example, the cost of dehydrating is over US$ 1/kg of dry leaves, equivalent to the price of 1 kg of savoury. Therefore, the drying process should be optimized and drying techniques should be chosen depending on the quality requested for the final product and its selling price. Several parameters have to be considered when identifying the best adapted drying equipment, such as: the reaction of the plant during the drying process, the duration and the drying temperature, the required capacity of the installation and its price. Several dryers are further described in increasing order of their price.

Natural drying is still largely used for culinary and aromatic plants of Groups II and III. The plants are simply spread on the ground in the open (plants less prone to decolourize) or in an aerated shelter; labour is required to turn them over more than one time. The drying yield can be improved if the plants are spread on an elevated netting allowing a better circulation of the air. This type of drying cannot be used for plants in Group I. Plants from Group II can be dried using this system but their quality if now. Natural drying is however the only economical method for plants of Group III and the very low-priced plants of Group II.

The advantage of the method is its low cost, especially if labour is cheap; its main disadvantage is the long duration. The enzymic reactions in plants are only stopped when their moisture content is below 15%, i.e. at the end of drying process. Before this

Primary Processing of Medicinal Plants

The most valuable products can be prepared from the plant components which contain most of the active substances. One of the important conditions for improving the quality is gathering the plants when their active substances content is at a maximum. This time corresponds to the biological ripeness only for a few crops and seeds. For most of the medicinal plants the peak of accumulation of active ingredients is around the period of flowering, while it is around the end of the vegetation period for the parts of plants in the ground. In these cases the harvest, the time of collection is not the time of biological ripeness, but the period of technical or technological ripeness.

At this time the water content of the harvested plant parts (leaf, stalk with leaves, flower, root) is still high; consequently, these parts cannot be stored without deterioration even for a short period.

However, one of the common features of the medicinal plants is that they cannot be consumed in a fresh state. That is why the harvested plants should be prepared in such a way that they become suitable for storing, and should be preserved in order to prevent the occurrence of deteriorating biological processes.

Generally, the first preservation (processing) operations after harvesting are carried out by the producer himself. For this reason, these operations are called primary processing, so as to distinguish them from the subsequent industrial processing.

The most frequent (and at the same time, the simplest) form of primary processing is the drying and the extraction of essential oil.

Drying

After drying, the water content is reduced to a degree where storage is feasible. The water content of the plant parts is classified according to the mode of water binding, in terms of drying technique, as follows:

Chemically bound water has a high binding energy; its removal is possible only by destroying the material: consequently, it cannot be removed by drying.

Drying methods

In practice, the methods of drying are divided into two categories according to the heat source: natural and artificial. The artificial methods are further subdivided, according to the temperature of the air, into cold, warm and hot methods. All three methods are used for the drying of medicinal plants.

Natural drying

This is a method that has been used from ancient times. The simplest type is drying by sunshine at the growing area. It has the disadvantages of the risks of harm by extreme weather conditions. In order to exclude the influence of weather, airy barns and sheds have been used, and are also used today. This method is most frequently used for wild-growing plants. Another disadvantage of this method is the demand for large areas.

Medicinal plants are placed on drying stands, on replaceable drying frames, in order to better exploit area and speed up the drying, to reduce the demand for manual turning, and to prevent any harm resulting from the turning operation.

The plant components should be placed in layers of thickness corresponding to their size in order to achieve proper drying. On 1 m^2 area the amounts of fresh plants should be as follows: 0.5 kg of flowers, 1–2 kg of plants and leaves, 2–2.5 kg of roots. The duration of drying is mainly influenced by the weather. The air movement should be maintained carefully.

Artificial drying

Natural drying may take several weeks, depending on the weather conditions. The drying time may be reduced to hours by warm driers, and even to minutes by heat driers. For artificial drying the air is heated, its relative humidity content is reduced by intensive flow, and the demand for manual work is reduced.

Cold-air drying. In this method only the movement of the drying air is controlled. The air movement is maintained by machinery (fans). It is used for the drying of crops which are larger in volume than expected. The fan may only be operated during dry, warm weather, when the relative humidity content of the air is not above 50 per cent. The duration of the drying is 8–20 days, depending on the humidity content of the plant and the moisture content of the air.

A transitional method, between cold-air drying and warm-air drying, is drying with *forced ventilation.* In this method there is a possibility of warming the air as well as moving it. The requirement for manual work is also less. It is especially applicable to the drying of seeds and herbs without the risk of active substance loss.

In the equipment (Fig. 29) a high-capacity fan forces a large amount (20 000–30 00 m^3/h) of low-moisture air into the fresh herb bulk via the duct system with high pressure. The system may also be operated in the case of a high humidity content of the outside air, as mobile thermal blowers may be incorporated in the system. With

Operations after drying

After drying, the drugs are generally prepared as products for the wholesale or retail trades. The operations serving this purpose are called the manipulating operations. The most frequent operations after drying are as follows: sorting and cleaning, screening, stalk removal, crumbling, cutting up and grinding.

Extraction Processes for Essential Oils

The term 'natural essential oil' means or covers all aromatic extracts from vegetable matter (flowers, leaves, branches, roots, gums, fruits). The components of essential oils giving the scents of the plants are mostly terpenes and derivatives of terpenes (alcohols, esters, aldehydes, ketones, etc.). Among the other compounds the most important are sulphur compounds (in the essential oils of mustard, garlic, horseradish, etc.), and several aromatic compounds (phenols, aromatic aldehydes, coumarins).

The most widely used procedure for extracting the essential oil from the plants is *steam distillation*. With this method the volatile compounds and compounds insoluble in water, i.e. the essential oils, can be extracted. Steam distillation produces the essential oil in the purest form and requires relatively simple equipment and moderate labour even on an industrial scale. Three types of distillation are distinguished according to the method of execution; i.e. water distillation (Fig. 32a), water and steam distillation (Fig. 32b), and steam distillation (Fig. 32c). All three processes are based on the same principle, the so-called steam distillation or hydrodistillation; the different names refer only to the technological dissimilarities.

Solvent extraction processes may be used for plants which contain small amounts of essential oil or which dissolve in water very easily (mainly the scent materials of some flowers), or for plants which are not volatile, but whose soluble ingredients are valuable.

The third procedure of extracting the scent materials is cold *pressing*. This is used for extracting the essential oils from the fruits of citrus plants.

Classic steam distillation

The boiling points of the components of various essential oils differ significantly. For example, the boiling point of terpene hydrocarbons at atmospheric pressure is 160–180 °C, while that of terpene alcohols is 200–300 °C, and that of sesquiterpenes and their derivatives is 260–290 °C. Most of these materials have pleasant odours, as they evaporate even below their boiling points. Simple distillation is basically a process whereby the liquid is transformed into steam at its boiling point, and then the steam is condensed back into liquid with the help of cooling.

Steam distillation (hydrodistillation) is a simultaneous distillation of two different fluids, generally water and a material insoluble in water (e.g. essential oils). The physical effects of steam distillation are not the same as those of simple distillation.

Temperature and daylength influences on the growth and germination of sweet basil and oregano

By E. PUTIEVSKY
Division of Spices and Medicinal Plants, ARO, Newe Ya'ar Experiment Station, Post Haifa, Israel

SUMMARY

Oregano and sweet basil were grown in phytotron cabinets at 18/12°, 24/12° and 30/12°C (day/night) in either 10- or 16-h photoperiods. Only temperature had a positive influence on plant height in both species. The fresh yield was significantly influenced by temperature and daylength in all the three harvests examined for both species. The correlation between these results and field behaviour in different regions is discussed. The optimum temperature for the germination of oregano was a day/night regime of 24/19°C; sweet basil was less sensitive and germinated well at temperature regimes between 18/13° and 30/25°C.

ALTHOUGH much information has accumulated on the yield components of spice plants in eastern Europe, little has been published on spices in the Mediterranean region. In Israel the commercial cultivation of spices started in recent years, mainly the leafy spices of the Labiatae (Putievsky and Basker, 1977). Most of these spices grow wild in the Mediterranean region, including Israel. Knowledge of the influences of temperature and photoperiod on growth and yield, would be valuable in planning future sites for cultivation and would indicate the adaptability of the spices in other regions.

This report describes the growth of sweet basil, an annual, and oregano, a perennial. The germination, growth and yield of these two spices, from the seedling stage until the third harvest, was examined at three temperatures and with 10- or 16-h daylengths.

MATERIALS AND METHODS

Seeds of two species grown commercially in Israel, sweet basil (*Ocimum basilicum* L.) from California (Sunset Co.) and oregano (*Origanum vulgare* L.) collected from Greece, were tested at the CSIRO Canberra phytotron for: (a) the effect of temperature on germination, (b) the effect of daylength and temperature on the yield components, and (c) the effect of spacing on the same yield components.

(a) The effects of temperature on germination were studied under eight regimes: 15/10°, 18/13°, 21/16°, 24/19°, 27/22°, 30/25°, 33/28° and 36/31°C, day (8 h)/night (16 h). At each temperature there were four replicates, each of one petri dish containing 80–150 seeds. The dish was covered with aluminium foil. Germination was recorded every 1–3 days when the roots became visible.

(b) The seeds were germinated on 20 December 1978 with 21/18°C day/night temperatures. At the two-cotyledon stage the seedlings were planted in 18-cm diam. pots, containing a 1:1 mixture of perlite and vermiculite, one seedling per pot.

On 20 January 1979 eight plants, one per pot, were placed at random in each of six BT phytotron cabinets (Morse and Evans, 1962), where temperature and daylength were controlled. Cabinets were allotted to the following six treatment combinations: 30/12°, 24/12° and 18/12°C day/night temperatures, each at 10 h and 16 h daylength. The phytotrons allowed each photoperiod treatment to include an 8-h period of high intensity solar radiation, but low intensity light radiation with emission mostly in the red end of the spectrum was used for extending the photoperiod.

CULTIVATION OF DILL

Dill may be grown for its leaves or its umbels. Leaf dill is used for direct consumption or for freezing. Dill for freezing is normally harvested earlier than usual as compared with dill for direct consumption.

Soil

If the earliest possible harvest is desired, the dill should be sown in a light soil. If such an early harvest is not required, dill develops better in a clayey (argilliferous) soil, although not in hard clay. Dill should not be sown more than once every 4 years in tne same soil.

Fertilizer

As dill needs phosphorus (P), the following amounts are recommended:

700 - 800 kg per ha. of PK 15-30
400 - 800 kg per ha. of calcium nitrate

If the dill is grown only for leaves, all the nitrogen should be applied before sowing. For combined cultivation, or growing for umbels, half the nitrogen is to be applied as top dressing before sowing and the remainder when harvesting the leaf dill (if a later harvest of umbel dill is desired) or when the umbel dill is 15 - 20 cm tall.

Amount of seed

For umbel dill 20 kg per ha., for leaf dill 40 - 80 kg per ha. according to the distance between the rows. For late sowing, a larger amount of seed will be required than for normal sowing. In large areas a row distance of 45 cm is often used, while in smaller areas it may be reduced to as little as 10 cm.

Sowing date

Dill may be sown from the spring to the end of July, depending on the desired time of harvest.

Control of weeds and insect pests

In Scandinavia the following weed killers are often used:

when sowing, 0.5 kg per ha. of propazin (on harder soils)
when weeds appear later, 3 - 4 kg per ha. of kloroxuron

Watch out for aphids. The best means of control is an organic phosphorus compound such as:

Malation	1.0 - 1.5 liters per ha.
Dibrom	1.0 - 1.5 liters per ha.

Days to maturity

The normal germination period is about 3 weeks when grown outdoors. Sowing about the 15th August normally means an October harvest, but in Scandinavia dill sown at the end of August will usually be ready for harvesting in November.

MINOR SPECIALIST CROP DEVELOPMENT AND SOME RESTRICTIONS ON PEST AND WEED CONTROL FOR HERBS GROWN IN EUROPE

T. M. DAVIES

Malvern View Herbs,
Upton upon Severn
ENGLAND
WR8 0RN

ABSTRACT

The objective of this review has been to provide an appraisal of the prospect for herb crops and their development in the EC. Special attention is drawn via some examples of the difficulties facing minor crop growers in the cultural practices which they can adopt. In particular, culinary herb cultivation is restricted by the range of pesticide products approved for use on these crops. Thus difficulties of seeking pesticide approval could limit the scope for future development of herb crops in Europe. Many of these problems would be common to most minor specialist crops proposed or currently grown in Europe. Proposals are presented for the extrapolation of pesticide products from nominated major crop uses to specified minor crops based on botanical associations, cultural technique, plant habit and morphology. Given this opportunity, small scale specialist crops may continue to grow within integrated pest and weed management systems to meet their demand in Europe.

1. INTRODUCTION

Culinary herbs have formed part of the diet all over Europe for many centuries (Grieve, 1984). Different herbs have been traditionally associated with particular regions; basil (*Ocimum basilicum*) with Italy, oregano (*Origanum vulgare*) with Greece (Kokkini and Vokua, 1989), rosemay (*Rosmarinus officinalis*) with the Mediterranean coast (Boelens, 1985), dill (*Anethum graveolens*) with northern Europe (Savonius, 1987). Today, with improved communication and dissemination of information, culinary herbs are required all year round (Houdret, 1990) throughout Europe.

Over the past decade reports emerged of a surge in interest and demand for culinary herbs within Europe (Greenhalgh, 1979; Smith, 1982; Anon, 1986; Carruthers, 1986 a & b; Hay *et al.*, 1986; Dumville, 1988 a & b; Verlet, 1990). However, the statistical data upon which these growth rates are derived can be dubious (Anand, 1985; Verlet, 1992 a & b) and the exact rate of growth has not been established.

Reputable authorities (e.g. Greenhalgh, 1979; Svoboda, 1984; Verlet 1992 a & b) have encouraged the opportunities for herb production in some European countries. However,

THE CURRENT UK APPROACH TO SECURE PESTICIDE APPROVALS FOR HERBS

T M Davies, Malvern View Herbs, UK

December 1994

In the medicinal and aromatic herb sector of the UK considerable attention to pesticide approvals is given by herb growers as represented by BHTA.

This attention to pesticide approvals is due to the UK climate being generally more conducive to leaf herb production than some other products, eg medicinal flower or seed crops. However the UK is also possibly more prone to herb disease attacks and weed growth than found in other parts of the EU.

Although UK herb growers are looking for integrated pest control systems with minimal pesticide use to ensure highest quality products some use of chemical pesticides is essential.

The UK herb sector all falls into the category of minor crops. Minor crops in the UK have suffered from the withdrawal of chemicals as the tighter, Europe-wide legislation and regulatory processes have developed.

This, together with a national pesticide regulation scheme that has adopted all the European directives, has meant that minor crops lobbying has needed to become highly organised. This has been achieved by targeting various levels.

At national level the NFU and BCPC have organised a Minor Crops Working Committee which includes pesticide representatives from grower groups, PSD, NFU, Departments of Agriculture, chemical industry etc.

This committee includes herbs and forms a voice-box for issues on pesticides use in herbs within the UK. The committee is also trying to extend its effectiveness in cooperation with similar committees in other EU countries.

A network of bodies connected with pesticide approvals for herbs has emerged (*Fig 1*). At the industry level the BHTA recognised a need for greater in-depth vigilance in particular pesticide developments that affected UK herbs. This arose partly as a result of the stringent requirements of PSD for each individual herb species to be listed

Volatile Flavour Components of Coriander Leaf

Alexander J. MacLeod and Rashida Islam

Department of Chemistry, Queen Elizabeth College, Campden Hill Road, London W8 7AH

(*Manuscript received 29 September 1975*)

Using previously reported methods of sample preparation an essence of coriander leaf was obtained which proved to contain over 25 components. Most of these have been identified, with aliphatic aldehydes providing nearly 90% of the sample. C_{12} aldehydes are the most abundant.

1. Introduction

The coriander plant (*Coriandrum sativum*) has been recognised from ancient times as a medicinal herb used in the treatment of minor ailments and as a flavouring agent. Although both the leaf as well as the "seed" (more accurately, the fruit) are used as flavouring commodities, the latter is by far the more common. As a result, much information is available concerning the identities of many of the volatile flavour components of the seed oil,[1,2] but to date very little has been positively reported about the flavour components of the leaf. This can be considered to be a deficiency which should be remedied, so this paper reports a detailed systematic investigation into the nature of the volatile flavour components of coriander leaf. Apart from this justification it should be pointed out that the leaf is widely employed as a flavouring commodity in certain Eastern dishes, e.g. in fish curry, various meat dishes and salad dishes. In fact, the leaf has a strong, pleasing flavour and a very appetising arome, and it is likely that it could also be used to advantage with some European foods.

Coriander seed oil has an agreeable odour and the flavour of spice. Its main constituent is linalool (sometimes even referred to as coriandrol) which is present to about 60 or 70%. Other terpenes such as pinenes, terpinenes, geraniol, etc. make up the bulk of the remainder of the oil.[1] The leaf, or herb oil has a pronounced fatty aldehydic aroma and not surprisingly it has not proved possible to use leaf oil instead of seed oil in any flavour, perfume or pharmaceutical formula. In fact, the leaf oil is reputed to contain such a large amount of higher aliphatic aldehydes that it might almost be considered as a commercial source of such compounds.[3] The only reasonable chemical analysis of the leaf oil was carried out by Carlblom in 1936 in which he noted the aldehyde content as about 95%.[4] Of this n-decanal was shown to contribute about 10%; dec-2-enal and 8-methylnon-2-enal were also claimed to be present.

2. Experimental

A valid aroma extract of coriander leaf was obtained using an apparatus based on that originally described by Likens and Nickerson[5] but which was somewhat modified to make it more efficient and more suitable for this type of work. This modified apparatus has been employed in this laboratory in other similar studies[6-8] and already described in detail.[7,8] Approximately 400 g of fresh coriander leaves purchased from a local retailer were used for each extraction. The volatile organic solvent chosen as best extracting medium was triply distilled 2-methylbutane (15 ml).

The extract thus obtained was in fact not as dilute as such aroma extracts often are, but it was still nevertheless concentrated to a certain extent using the low temperature/high vacuum distillation

HortScience 29(2):102–103. 1994

Postharvest Shelf Life of Sweet Basil (*Ocimum basilicum*)

Diana D. Lange[1] and Arthur C. Cameron
Department of Horticulture, Michigan State University, East Lansing, MI 48824

Additional index words. temperature, postharvest storage, packaging, chilling injury, diurnal response

Abstract. **Shelf life (defined by visual quality) of freshly harvested greenhouse-grown sweet basil was maintained for an average of ≈12 days at 15C. Chilling injury symptoms were severe at storage temperatures of 5C and below. Shelf life was found to be only 1 and 3 days at 0 and 5C, respectively. Moderate chilling injury was noted at 7.5 and 10C. Harvesting sweet basil later in the day (i.e., 1800 or 2200 HR) increased shelf life by almost 100% when harvested shoots were held at 10, 15, and 20C, compared to harvesting at 0200 or 0600 HR. However, the time of day of harvest did not alter the development of visual chilling injury symptoms or improve shelf life at 0 or 5C.**

Fresh-cut culinary herbs have become increasingly popular in recent years. Although herb production is expanding to meet this demand, the quality of herbs at the retail market is sometimes unacceptable. One problem is that some fresh herbs are chilling-sensitive, yet are commonly handled with fruits and vegetables. Limited information is available on postharvest storage and handling practices for fresh herbs and on their tolerance to short-term exposures to chilling temperatures (Hardenburg et al., 1986).

One of the most highly consumed fresh herbs, sweet basil, is sensitive to chilling injury (CI). Saltveit and Morris (1990) reported that basil is chilling-sensitive, but did not identify a specific chilling temperature. Joyce et al. (1986) noted that CI symptoms developed at 0C and suggested that storage at 5 to 7C was optimal for long-term basil storage.

King et al. (1982) found that tomato (*Lycopersicon esculentum* Mill.) seedlings exposed to chilling temperature in the hours just before dawn were injured far more than seedlings exposed to chilling temperatures between noon and midnight. They proposed that diurnal changes in carbohydrates correlated with chilling sensitivity (King et al., 1988). To our knowledge, no one has yet determined if harvest time during the day could influence subsequent CI of basil.

Retailers often hold sweet basil at room temperature to avoid CI, although these conditions can potentially cause desiccation or enhance growth of decay organisms. No shelf life data for sweet basil at room temperatures have been reported.

The purpose of this study was to characterize visual shelf life of sweet basil as influenced by temperatures from 0 to 25C. In addition, we wished to determine if harvest time during the day would influence subsequent shelf life, development of CI symptoms, or both. In all cases, experiments were conducted with basil packaged in perforated polyethylene to minimize the effect of desiccation on shelf life, as suggested by Joyce et al. (1986).

Materials and Methods

Sweet basil seeds (Sieger Seed, Imlay City, Mich.) were sown in 11-cm (600-ml) plastic azalea pots with two seeds in each of three holes ≈1.5 cm deep using a commercial peat–perlite–vermiculite mix. The seedlings were thinned after 2 weeks to three equally spaced plants per pot. This method of sowing and thinning had been found in preliminary experiments to produce more biomass than one or two plants per pot (data not shown).

Plants were grown in a computer-controlled greenhouse under 24/20C day/night cycles. In all experiments, plants received at least 12 h of light either naturally or using 400-W high-pressure sodium lamps, and were irrigated weekly with 225 mM 20N–20P–20K. Basil shoots were harvested by cutting just below the second fully expanded node from the growing point after ≈6 weeks of growth. Each harvested shoot contained six to eight leaves and weighed 4 to 6 g. Unless otherwise stated, basil shoots with leaves were harvested at ≈1400 HR on sunny days. Harvested shoots were placed in unsealed plastic bags at time of harvest and rapidly transported to the laboratory (≈22C) for packaging.

Two shoots (six to eight leaves each) were sealed per 20 × 20 cm package constructed from 127-μm-thick, low-density polyethylene film (LDF 501, Dow Chemical Co., Midland, Mich.) using a Magneta 620 heat sealer (Packaging Aids Corp., San Francisco). Shoots with bruised or damaged leaves were not used. Four 26.5-gauge needle holes (≈0.4 mm in diameter) were punched through each package to facilitate O_2 and CO_2 exchange. The entire procedure of harvesting and packaging took <90 min in all experiments (harvesting, 30 min; packaging, 60 min). Basil packages were held in darkness under black plastic for the duration of all experiments.

Four packages each of basil were placed in controlled-temperature chambers at 0, 5, 10, 15, 20, and 25C, all less than ±1C, and covered with black plastic to maintain darkness. Basil was inspected daily at 1400 HR and rated visually for the presence of necrosis, surface molds, water soaking, chlorosis, and leaf abscission. Shelf life was defined as the time until the first obvious sign of deterioration, based on visual analysis only. The entire experiment was repeated weekly six times beginning in July 1988 and ending in Aug. 1988. The data were pooled and analyzed as a simple two-way analysis of variance (ANOVA) with temperature × harvest date. The effect of harvest date was not significant.

In a second experiment, packaged sweet basil was held at 0, 2.5, 5, 7.5, or 10C for 0, 1, 2, or 3 days before transfer to 20C, with five packages per treatment. Four days from packaging, all basil shoots were analyzed visually for the extent and location of CI symptoms, such as tissue soaking and blackening. Basil cuttings were inspected for any noticeable lesions. This entire experiment was repeated three times. The data were analyzed as a two-way ANOVA with temperature and duration as the main factors.

In a third experiment, sweet basil shoots were harvested every 4 h beginning at 0200 HR and ending at 2200 HR. Shoots were processed and packaged after each harvest as described above, and four packages were placed immediately in controlled chambers set at 0, 5, 10, 15, 20, and 25C. The packages were handled and evaluated as described previously, except that observations were made daily at 1600 HR. The entire experiment was conducted three times during Aug. and Sept. 1988, and the data were analyzed as a three-way ANOVA with harvest time, temperature, and harvest date as the main factors.

Results and Discussion

The average shelf life of packaged sweet basil was longest at 15C (Table 1), where >95% of the packages lasted 7 days or more (Fig. 1). Eight packaged cuttings lasted longer than 13 days, with one cutting lasting 29 days (Fig. 1). The shelf life was eventually limited by the development of surface molds and/or chlorosis of the older tissue. Visual shelf life ranged from 2 to 14 days at 20C, with an average of >1 week (Table 1, Fig. 1). At 20C 50% of the packages remained visually acceptable for 7 to 9 days. The average shelf life was nearly 1 week (Table 1) at 25C, although 60% of the packages were visually acceptable for 6 days or less.

Shelf life was reduced at temperatures ≤10C compared to 15C (Table 1). Chilling injury

Received for publication 26 Mar. 1993. Accepted for publication 17 Oct. 1993. Mention of a trademark, proprietary product, or vendor does not constitute a guarantee or warranty of the product by Michigan State Univ. and does not imply its approval over other products or vendors that may also be suitable. The cost of publishing this paper was defrayed in part by the payment of page charges. Under postal regulations, this paper therefore must be hereby marked *advertisement* solely to indicate this fact.

[1]Current address: Dept. of Pomology, Univ. of California, Davis, CA 95616.

Average shelf life, based on appearance, of aged sweet basil cuttings as influenced by perature. Cuttings were harvested at 1600 Mean ±SD based on 24 packages at each perature.

°C)	Shelf life (days)
	1.6 ± 0.6
	3.2 ± 1.2
	8.3 ± 2.7
	12.5 ± 5.4
	7.3 ± 3.0
	6.8 ± 2.4

oms at 10C were limited to the youngest unded leaves on some of the sweet basil. e cases, CI was evidenced by water- regions that eventually became ne- Shelf life ranged from 3 to 14 days at ig. 1), primarily determined by whether CI symptoms developed. There was e evidence of CI at 5C, and 75% of the ges was judged unsalable after only 3 Chilling injury symptoms were severe at d the majority of the tissue eventually black.

posure to 0C for only 1 day, followed by r to 20C for 4 days, caused CI symp- on 100% of the packaged sweet basil). Short-term exposures to 2.5C also d CI, although the rate of symptom sion was less than at 0C (Fig. 2). Three f exposure at 5C were required before om development limited the salability basil. Symptoms developed only after 3 f exposure to 7.5 or 10C, and affected % of the packages in both cases (Fig. 2). ther lesions developed after transfer to However, slightly sunken or discolored s continued to degenerate until the af- area was completely necrotic.

rvesting sweet basil in the second half of significantly improved the visual shelf ly for storage temperatures ≥10C (Fig. ere was a nearly two-fold increase in

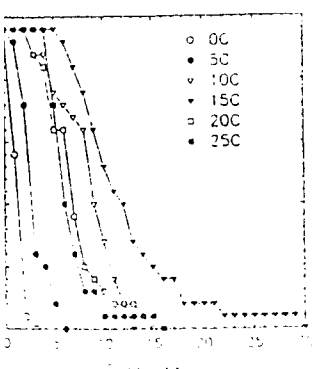

The effect of temperature on the number of damaged packaged sweet basil cuttings over time. Cuttings were classified as damaged if they were judged unsalable because of CI. Each point is the mean of cuttings for each temperature treatment. n = 24.

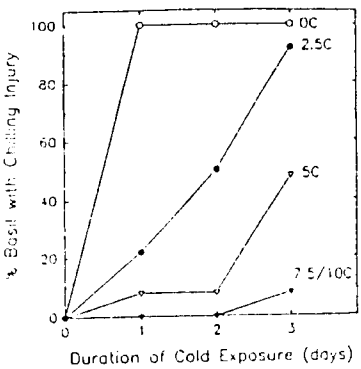

Fig. 2. Development of chilling injury symptoms on packaged sweet basil with increasing time of exposure at low temperatures while stored in the dark.

shelf life of sweet basil harvested at 1800 HR compared with 0200 or 0600 HR when held at 10 or 20C. This effect of time of day of harvest was also substantial at 15C, with an increase in shelf life of 170%.

Surprisingly, no alleviation of CI symptoms was observed on shoots from basil stored at 0, 5, or 10C when harvested at times later in the light period, as was reported for tomato seedlings (King et al., 1982). The difference in response may relate to the use of intact vs. detached plant material, or may represent a basic difference in plant response. In a separate experiment, 24 out of 24 unprotected plants exposed to 5C developed CI symptoms within 1 day, compared to 3 days for packaged shoots. Protection from heat loss and water loss through the polyethylene packages may have affected the response. Wilson (1976) reported that CI on green bean (*Phaseolus vulgaris* L.) plants was prevented for 7 to 10 days simply by enclosing the plants in polyethylene bags. The symptoms of CI in green bean plants were wilting and pitting of leaf tissue, which are enhanced by water loss. In our experiments, there was little modification of O_2 or CO_2 in the packages (data not shown).

The observation that shelf life of cut sweet basil harvested later in the day was greatly improved at 15 to 25C suggests that diurnal changes did take place. Whether these changes were related to carbohydrate accumulation, as suggested by King et al. (1988), or other factors, was not determined. Whatever the changes, they did not enhance resistance to chilling injury.

There was no evidence that the packaged sweet basil lost an appreciable amount of essential oil during extended storage at ≥15C, although no chemical tests were conducted. Leaves retained their characteristic odor and flavor.

The longest shelf life of sweet basil was found at 15C. In contrast to the report of Joyce et al. (1986), CI symptoms were noted at 10C and were severe at 5C. Possibly, the "optimum" storage temperature may be just above 10C, although this was not tested in this study.

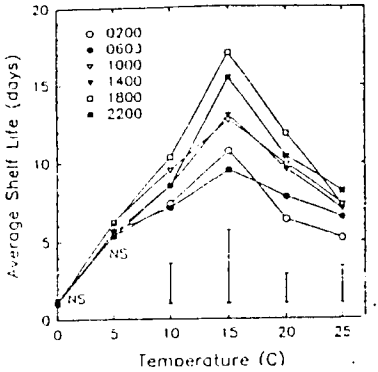

Fig. 3. The effect of time of day of harvest and temperature on the average shelf life of packaged sweet basil stored in the dark. The bars represent the $HSD_{0.05}$ for treatment mean separation at each temperature. Harvest times were 0200 to 2200 HR.

Preharvest temperatures could alter the chilling sensitivity of harvested shoots, which could explain the differences between the current results and those of Joyce et al. (1986).

Perforated polyethylene packages were used in these experiments to limit water loss, as suggested by Joyce et al. (1986) and practiced commercially. In separate experiments, we found that sweet basil readily took up water when the cut stems were placed in water. At 15 to 25C, root initials were observed on the lower portions of the basil stems after holding them in water or polyethylene packages after 1 to 2 weeks.

The results from this study suggest that, for maximum shelf life, sweet basil should be harvested near the end of the light period and stored above 10C with protection from water loss. When bruising and other damage was avoided, shelf life of sweet basil was nearly 2 weeks. Shelf life was found to be longer at 20 and 25C than at 0 and 5C, although 1- to 2-day exposures to 5C could be tolerated with no observable CI symptoms.

Literature Cited

Hardenburg, R.E., A.E. Watada, and C.Y. Yang. 1986. The commercial storage of fruits, vegetables, and florist and nursery stocks. U.S. Dept. of Agriculture Agr. Hdbk. 66 (rev.).

Joyce, D.C., M.S. Reid, and P. Katz. 1986. Postharvest technology of fresh horticultural crops. Cooperative Extension, Univ. of California, Issue 58.

King, A.J., D.C. Joyce, and M.S. Reid. 1988. Role of carbohydrates in diurnal chilling sensitivity of tomato seedlings. Plant Physiol. 86:764–768.

King, A.J., M.S. Reid, and B.D. Patterson. 1982. Diurnal changes in the chilling sensitivity of seedlings. Plant Physiol. 70:211–214.

Saltveit, M.E., Jr., and L.L. Morris. 1990. Overview on chilling injury of horticultural crops. p. 3–16. In: C.Y. Wang (ed.). Chilling injury of horticultural crops. CRC Press, Boca Raton, Fla.

Wilson, J.M. 1976. The mechanism of chill- and drought-hardening of *Phaseolus vulgaris* leaves. New Phytol. 76:257–270.

MARKET CONTACTS

A selection of companies involved in the dried herbs and spices trade

European Spice Association
6 Catherine Street
London
WC2B 5JJ

Tel: 44 (0) 171 836 2460
Fax: 44 (0) 171 836 0580

United Kingdom +44

British Pepper & Spice Company Ltd
Rhosily Road
Northampton
NN4 OLD

Bush Boake Allen
Blackhorse Lane
Walthamstow
London E17

Tel: (0) 181 531 4211
Fax: (0) 181 531 7413

Combined Shipping and Trading Co Ltd
36 Broadway
London
SW1H OBH

Tel: (0) 171 799 1030
Fax: (0) 171 222 6706

Fooks & French
Thames House
Park Street
London SE1

Tel: (0) 171 378 8575
Fax: (0) 171 378 8582

Lionel Hitchin
Gravel Lane
Barton Stacey
Winchester

Tel: (0) 1962 760815
Fax: (0) 1962 760072

Lion Foods
Astmoor
Runcorn
Cheshire

Tel: (0) 1928 565221
Fax: (0) 1928 561172

Schwartz Spices Ltd
Castle House
71/75 Desborough Road
High Wycombe

France + 33

Tradimpex
BP 23
ZI St Nicolas
La Queue en Brie

Tel: 1 45 93 02 32
Fax: 1 45 93 08 10

Netherlands + 31

Catz International
Blaack 22
POB 180
3000 AD Rotterdam

Tel: 10 4113440
Fax: 10 4118913

Man Producten 13V
PO Box 253
3000 AG Rotterdam
Weena 612-164
3012 CN Rotterdam

Tel: 10 4177377
Fax: 10 4147550

Germany + 49

Jost Bauer and Co.,
Querstuecken 3A
22851 Nordertedt

Tel: 40 524 5071
Fax: 40 524 8329

Ubena Gewurze GmbH
Hans-Bredow-Strasse
2800 Bremen 44

Tel: 421 486 950

E.H. Worlee and Co.,
Bellevue 7-8
2000 Hamburg 60

Tel: 40 27 134 114
Fax: 40 27 057 05

Wagner-Gewurze
Zum Bodenholzle 17
7070 Schwabisch Gmund-Reitprechts

Tel: 71 71 43237
Fax: 71 71 40620

United States +1

Gilroy Foods Incorporated
PO Box 1088
Gilroy
CA 95020

Kalsec Inc.,
3711 West Main
PO Box 511
Kalamazoo
MI 49005

Tel: 616 349 9711
Fax: 616 382 3060

McCormicks Inc.,
Spice Mill
10901 Gilroy Road
Hunt Valley
Maryland 21031

Tel: 410 771 7462
Fax: 410 771 7301

J. Manheimer Inc
47-22 Pearson Place
Long Island City
NY 11101

Tel: 718 392 7800
Fax: 718 392 7985

Meer Corporation
9500 Railroad Avenue
PO Box 9000
North Bergen NJ 07047

American Spice Trade Associated Inc
560 Sylvan Avenue
PO Box 1707
Englewood Cliffs
N.J. 07632

Tel: 201 568 2163
Fax: 201 568 7318

Singapore

See Separate Sheet

Japan + 81

All Nippon Spice Association
5 23-28 Nishi-Gotanda
Shinagawa-ku
Tokyo 141

Tel: (03) 493 6884

See Separate Sheet

MARKET CONTACTS

A selection of companies involved in the essential oil trade

United Kingdom +44

Bush Boake Allen Ltd
Blackhorse Lane
London E17 5QP
Tel: (0) 181 531 4211
Fax: (0) 181 531 7413

Grahame Page Trading
Unit 5, Prospect Business Park
Langston Road
Loughton
Essex IG10 3JR
Tel: (0) 181 532 1022
Fax: (0) 181 532 1023

H.E. Daniel Ltd
Longfield Road
Tunbridge Wells
Kent

Fuerst Day Lawson Ltd
St Clare House
30-33 Minories
London EC3N 1LN
Tel: 171 488 0777
Fax: 171 488 9927

Lionel Hitchen (Essential Oils) Ltd
Gravel Lane
Barton Stacey
Winchester
Tel: (0) 1962 760815
Fax (0) 1962 760072

Pauls and Whites Internaitonal
Albert road North
Reigate
Surrey

R. Sarant and Co. Ltd
Priestley Road
Basingstoke
Hants RG24 9PU
Tel: 1256 29881
Fax: 1256 64711

R.C. Treatt and Co. Ltd
Northern Way
Bury St Edmunds
Suffolk
Tel: 1284 702500
Fax: 1284 752888

France +33

Adrian SA 15 rue de Cassis 13008 Marseille	Tel:	91 79 91 81
Chauvet (Pierre) Seillans - 83440 Fayence	Tel: Fax:	94 76 96 03 94 76 96 16
Florasynth France 45 BD Marcel Pagnol 06130 Le Plan De Grasse	Tel: Fax:	93 09 33 50 93 09 33 99
Mane Fils (S.A.V.) 06620 BAR-sur-LOUP	Tel: Fax:	93 09 70 00 93 42 54 25
Reynauld & Fils (S H.) 26570 Montbrun-les-Bains	Tel: Fax:	75 28 86 00 75 28 84 65
Remy (Lab. Monique) Parc Industriel des Bois de Grasse 06130 Grasse	Tel: Fax:	93 09 04 45 93 70 43 26
Robertet S.A. 37 avenue Sidi Brahim 06333 Grasse Cedex	Tel: Fax:	93 40 33 66 93 70 68 09
Syndicat National Des Fabricants De Produits Aromatiques Prodarom 48 avenue Riou Blanquet 06130 Grasse	Tel: Fax:	33 93 360721/36 33 93 365426
Systems Bio Industries 63 route de Plan 06332 Grasse Cedex	Tel: Fax:	93 09 30 00 93 70 82 39

The Netherlands +31

International Flavours and Fragrances (Nederland) bv Zevenheuvelenweg 60 5048 AN Tilburg		
Du Crocq Aromatics International bv PO Box 6 1270 AA Huizen	Tel: Fax:	2152 53742 2152 53741
Maschmeijer Aromatics PO Box 4170 Omval 81 1009 AD Amsterdam		

Flavodor bv
PO Box 533
5140 AM Waalwijk

Tel: 4160 40405
Fax: 4160 41845

Switzerland +41

Firmenich SA
CH-1211 Geneva 8

Givaudan Dubendorf Ltd
CH 8600 Dubendorf

Tel: 1 824 24 24
Fax: 1 824 22 76

International Organisation of the
Flavour Industry (IOFI)
International Fragrance
Association (IFRA)
8, Rue Charles-Humbert
CH-1205 Geneva

Tel: 41 22 213548
Fax: 41 22 7811860

Puressence Zurich
Blumlisalpstrasse 3
8033 Zurich

Tel: 1 363 09 23

Germany +49

Cornehls und Bosse
bei den Muhren 91
2000 Hamburg 11

Dragoco GmbH
D 3450 Holzminden

Tel: 5531 704 213
Fax: 5531 704 391

Haarmann und Reimer GmbH
D-3450 Holzminden

Tel: 5531 701 995
Fax: 5531 700 927

Paul Kaders GmbH
Postfach 11 12 80
2000 Hamburg 11

C. Melchers and Co.
48a, Steindamm
D-2820 Bremen 77

United States +1

Beacon Ltd
70 Floral Avenue
Murray Hill
NY 07974

Tel: 908 464 5800
Tel: 908 464 0002

Citrus and Allied Essences
65 S. Tyson Avenue
Floral Park,
N.Y. 11001

Durkee Foods Division
(SCM Corporation)
1001 Eighth Avenue
Bethlehem
Pennsylvania 18018

J. Manheimer Inc.
47-22 Pearson Place
Long Island City
N.Y. 11101

Florasynth Incorporated
410 East 62nd Street
New York
NY 10021

Tel: 753 890505
Fax: 753 890380

International Flavors and Fragrances (US)
600 State Highway 36
Hazlet, New Jersey 07730

Japan + 81

T. Hasegawa Co. Ltd
No 9 4-chome
Honcho
Nihonbashi
Chuo-ku
Tokyo 103

Morimura Bros. Inc
Morimura Building
1-3-1 Toranomon
Minato-ku
Tokyo 105

Ogawa and Co. Ltd
4-15 Nihonbashi Honcho
Chuo-ku
Tokyo 103

Takasago Corporation
3 19-22 Takanawa
Minato-ku
Tokyo 108

Singapore + 65

Prodarome Plc Ltd
87 Thas Avenue 1
Singapore 2263

Tel: 4611106

Tien Yuan Chemical Plc Ltd
18 Chin Bee road
Jurong Town
Singapore 2261

Tel: 652518/9