PN-ABW-217

Best available copy -- pages 46 & 47 missing

PN-ABW-217
95256

FOREST PRODUCTS RESEARCH DIVISION

PARTICLEBOARD TECHNICAL BULLETIN SERIES

(PB: TB-1)

DESIGNING A PARTICLEBOARD PANEL OF DESIRED PARAMETERS

By

S M Yasin and T A Qureshi

PAKISTAN FOREST INSTITUTE
PESHAWAR

(1992)

This Technical Bulletin was published and distributed by Winrock International, Forestry Planning and Development Project, Government of Pakistan/USAID, #58 Margalla Road, F-7/2, Islamabad. Additional copies are available on request.

CONTENTS

SUMMARY 1

INTRODUCTION 2

QUANTITATIVE COMPOSITION AND DESIGNING A PARTICLEBOARD PANEL 4

2.1 Designing a particleboard panel 4

2.1.1 Board parameters 5

2.1.2 Oven dry quantities of different components in a particleboard panel 5

2.1.3 Quantity of readily mixable form of board components in a panel 8

MEASUREMENT OF SOME PHYSICAL PROPERTIES OF RAW MATERIALS 9

3.1 Moisture content of wood 9

3.2 Moisture content of particles 11

3.3 Wood density measurements with the help of dimensional measurements 11

3.3.1 Units of density 12

3.3.2 Length, width and thickness measuring tools 12

3.3.3 Volume measuring tools 15

3.4 Determination of density of wood by water displacement technique - (Method I). 15

3.5 Determination of density of wood by water displacement technique (Method-II) 17

3.6 Basic density of wood 19

3.7 Solid content of adhesive and wax emulsion solutions 19

3.8 Preparation of adhesive solution 20

3.9 Preparation of wax emulsion 20

3.10 Bark quantity in wood (Method-I) 20

c

3.11 Bark quantity in wood (Method-II) 21

3.12 Density of bark in wood 22

4 APPLICATION OF WOOD DENSITY AND MOISTURE CONTENTS 22

4.1 Application of wood density in estimating the weight of wood 22

4.2 Application of wood density in estimating the volume of wood in a truck 23

4.3 Application of moisture content of wood in estimating the absolute quantity of wood in a truck or a wood lot 23

5 MEASUREMENT OF PHYSICAL AND MECHANICAL PROPERTIES OF PARTICLEBOARD 25

5.1 Physical properties 26

5.1.1 Moisture content of particleboard panel 26

5.1.2 Density of particleboard panel 27

5.1.3 Water absorption by a particleboard panel during water soaking 27

5.1.4 Thickness swelling of particleboard panel caused by water absorption 30

5.1.5 Linear expansion of particleboard panel in humid atmosphere 32

5.1.6 Thickness swelling of particleboard panel in humid atmosphere 34

5.2 Mechanical properties 35

5.2.1 Modulus of rupture 35

5.2.2 Modulus of elasticity 36

5.2.3 Internal bond strength or tensile strength perpendicular to the surface 39

5.2.4 Nail withdrawal resistance 41

5.2.5 Screw withdrawal resistance 43

5.2.5.1 Face screw withdrawal resistance 43

5.2.5.2 Edge screw holding resistance 44

6 EVALUATION OF PARTICLEBOARD 46

6.1 USA Standards 46

6.1.1 CS-236; 66 "Mat-Formed Wood particle board." 46

6.1.2 NPA-1 - 75 "Particleboard for Mobile Home Decking." 48

6.1.3 NPA 2 -72 " Standard for Particle-board decking for factory built housing." 48

6.1.4 "Minimum Property Standards: 1973." 48

6.1.5 The Use of Materials Bulletin No. UM-32 "Mat formed Particleboard for Exterior Use." 48

6.1.6 LLL-B-800 A: 1965 "Federal Specification on Building Board (Wood-Particleboard) Hard-Pressed Vegetable Fiber." 48

6.1.7 4270 - 21 - SPEC 48

6.2 Canadian Standards 48

6.2.2 CSA Standard 0188: 1968 48

6.3 British Standards 49

6.3.1 British Standard 2604: 1955 "Medium Density Resin Bonded chipboard." 49

6.3.2 British Standard 1811: 1961 "Methods of Test for Wood Chipboards and other Particle-boards." 49

6.3.3 British standard BS 5669: 1988 49

BS 5669 Part 1 "Methods of sampling, conditioning and test."

BS 5669 Part 2 "Specification for wood chipboard."

e

BS 5669 Part 4 "Specification for cement-bonded Particleboard."

BS 5669 Part 5 "Code of practice for the selection and applications of particleboards for specific purposes."

6.4 Pakistani Standards 49

6.4.1 PS 447: 1964 "Pakistan Standard Specification For Chipboard." 49

6.4.2 PS 619: 1967 "Pakistan Standard Specification for Particleboard (Medium-Density) 50

REFERENCES 51

PROFORMAS 52

APPENDICES 72

List of Figures

1. Summary of calculation procedures 7
2. Vernier Caliper commonly used for length and width measurement 13
3. Micrometer commonly used for thickness measurement 13
4. C W Gauge for measuring length and width of specimen 14
5. Volumeter for determining the volume of a specimen 16
6. Determination of density of wood by water displacement technique (Method-I) 18
7. Determination of density of wood by water displacement technique (Method-II) 18
8. Water soaking assembly for water absorption test 29
9. Assembly for hanging test specimens after water soaking 29
10. Particleboard test specimen marked with length measuring points 31
11. Particleboard test specimen marked with points for thickness measurements 31
12. Test assembly for Modulus of Rupture (MOR) test 37
13. Test assembly for Modulus of Elasticity (MOE) test 37
14. Determination of load at proportional limit from a load deflection curve 38
15. Test assembly for measuring the Internal Bond Strength 40
16. Test assembly for Nail Withdrawal Resistance 42
17. Test assembly for Screw Withdrawal Resistance 42
18. Mat Formed Wood Particleboard (CS 236- 66) 47

List of Proformas For Recording Data on Different Experiments

1.	Determination of moisture content of wood	53
2.	Determination of moisture content of particles	54
3.	Determination of density of wood with the help of dimensional measurements	55
4.	Determination of density of wood by water displacement technique (Method-I)	56
5.	Determination of density of wood by water displacement technique (Method-II)	57
6.	Determination of solid content of adhesive	58
7.	Solid content of wax emulsion	59
8.	Determination of moisture content of particle-board	60
9.	Density of particleboard	61
10.	Determination of water absorption by a particle-board panel	62
11.	Thickness swelling of particleboard during water soaking	63
12.	Linear expansion in particleboard panel in humid atmosphere	64
13.	Thickness swelling in particleboard panel in humid atmosphere	65
14.	Modulus of rupture of particleboard (MOR)	66
15.	Modulus of elasticity of particleboard (MOE)	67
16.	Internal bond strength (IBS) or Tensile strength perpendicular to the surface	68
17.	Nail withdrawal resistance (NWR) of particleboard	69
18.	Face screw withdrawal resistance (FSWR) of particleboard	70
19.	Edge screw withdrawal resistance (ESWR) of particleboard	71

h

List of Appendices

1. Quantity of oven dry particles, adhesive (7%),wax (1%) in a particleboard panel (size 2.438 x 1.219 x 0.013 meters) of density 400 to 1000 kg/m^3 73

2. Quantity of oven dry particles, adhesive (8%),wax (1%) in particleboard panel (size 2.438 x 1.219 x 0.013 meters) of density 400 to 1000 kg/m^3 74

3. Quantity of oven dry particles, adhesive (9%), wax (1%) in particleboard panel (size 2.438 x 1.219 x 0.013 meters) of density 400 to 1000 kg/m^3 75

4. Quantity of oven dry particles, adhesive (10%),wax (1%) in particleboard panel (size 2.438 x 1.219 x 0.013 meters) of density 400 to 1000 kg/m^3 76

5. Quantity of oven dry particles, adhesive (7%), wax (1%) in particleboard panel (size 2.438 x 1.219 x 0.019 meters) of density 400 to 1000 kg/m^3 77

6. Quantity of oven dry particles, adhesive (8%), wax (1%) in particleboard panel (size 2.438 x 1.219 x 0.019 meters) of density 400 to 1000 kg/m^3 78

7. Quantity of oven dry particles, adhesive (9%), wax (1%) in particleboard panel (size 2.438 x 1.219 x 0.019 meters) of density 400 to 1000 kg/m^3 79

8. Quantity of oven dry particles, adhesive (10%), wax (1) in particleboard panel (size 2.438 x 1.219 x 0.019 meters) of density 400 to 1000 kg/m^3 80

9. Standard Requirements of Commercial Standard CS 236-66 for Particleboard 81

10. Standard Requirements of Pakistan Standard PS 619: 1967 for Medium Density Particleboard 82

DESIGNING A PARTICLEBOARD PANEL OF DESIRED PARAMETERS

S.M. Yasin and T.A. Qureshi*

SUMMARY

The properties of a particleboard panel are influenced by manufacturing parameters as well as the quantitative composition of a board in addition to qualitative properties of the raw materials. Realizing the importance of the quantitative composition of a board in controlling the board properties, methods were developed to calculate the quantities of board components. For easing the designing of commercial size boards of 400 to 1000 kg/m^3 density, their quantitative composition was computed and tabulated with the help of IBM computer. Factors and techniques for calculating the quantity of raw materials at specific moisture levels were developed.

Techniques for determining the physical properties of raw materials and various physical and mechanical properties of board were surveyed from the literature and described precisely. For evaluating the quality of board, information on various property requirements as outlined in various standards was gathered and tabulated.

---

* The authors are Director Forest Product Research Division and Assistant Composite Wood Officer at Pakistan Forest Institute Peshawar, respectively.

DESIGNING A PARTICLEBOARD PANEL OF DESIRED PARAMETERS

INTRODUCTION

Particleboard is a sheet material manufactured from the particles of wood or other lignocellulosic materials bonded together by using binder cured under the effect of heat and pressure. A wide variety of raw materials and particles of varying sizes and shape may be used in the manufacture of such board. Although the process of producing boards is simple, a large number of raw materials and manufacturing parameters interact and affect board properties (1).

Of all the variables influencing properties of a particleboard panel, species is one of the most significant. It interacts virtually with every other variable and governs the type of particles that can be generated from it. For example, some species produce particles which produce boards with extremely smooth surfaces (2,3,4).

The most important species variable governing board properties is the density of wood. In general, the low density woods produce panels of desired density range. In the United States of America, the density of wood species being used in particleboard manufacturing ranges between 300 - 500 kg/m^3. Some wood species of about 650 kg/m^3 density are also used for producing high density boards.

An intensive research effort is underwey to develop ways to use high density wood species for producing medium density boards. The reason for the preferential use of low density species is that they can be compressed into medium density boards with the assurance that sufficient inter-particle contact is developed during pressing operations to achieve good bonding. Heavier species cannot be compressed into medium density boards having good bonding.

In general, acceptable physical properties in a board can be achieved if the density of board is at least 150 to 200 kg/m^3 greater than the density of wood species used. The appropriate pressure required to press a panel is related to the compression ratio, i.e., board density : species density. A compression ratio of 1.3 : 1.0 provides a good guideline for determining the suitability of a wood species compressed into a board. Such higher density boards would be well bonded having good strength. However, the greater weight and machining difficulty of such high density boards hinders their acceptance in the common market. A partial solution to the use of high density species is to mix them with low density species to achieve medium density board (5).

Board density is a powerful factor affecting board properties. In practice, the easiest way to improve most board

properties is to increase the board density. The increased board density results in more intimate contact between the particles in the mat being compressed into the final board. In low density panels, considerable quantity of resin is lost in interparticle voids. If the board is compressed to higher density, more of the 'dormant' resin is used effectively. Increasing board density not only improves effectiveness of resin but, of course, causes the presence of more wood for resisting mechanical loads. In places where wood costs are low, increasing board density is the cheapest way to improve board properties. However, the increased board weight can result in a heavier board which is diffic lt to handle, cut and machine. Furthermore, if freight rates are higher, heavier boards are costly to ship as well (6).

The most frequently used resins for particleboard manufacture are urea formaldehyde and phenol formaldehyde. Urea resins are the major binders used in the particleboard industry throughout the world. These are favored because of low price, ease of handling and fast curing in the press. They are colorless and do not color the final product. Phenolic resins are favored for products used for exterior applications. Melamine resins or combinations of melamine and urea resins produce particleboards that are fairly weather resistant. Urea-melamine-phenolic combinations are also used in Europe in exterior type boards. The quantity of resin addition is as 6 - 10% by weight of particles (7).

A number of additives are added to the particleboards for producing desired properties. The most commonly used additive is wax which imparts resistance to absorption of water. The rate of wax emulsion is quoted as 0.5 to 1.0% (8,9,10).

Although a good deal of literature on various aspects of particleboard manufacture, properties and uses is available, information on designing the panels is lacking. Such information is very important for particleboard manufacturers because proper designing of particleboard is responsible for its economical and quality production.

In this study a trial was made to produce enough information for easing the designing of board at the local industry. It was planned to accumulate and produce information on the quantitative composition of commercial size boards and the methods of evaluating their properties.

2 QUANTITATIVE COMPOSITION AND DESIGNING A PARTICLEBOARD PANEL

A particleboard panel is mainly composed of ligno cellulosic particles, binder and wax emulsion. About 88 to 90 % of a panel mass consists of lignocellulosic particles, binder and wax emulsion and the rest is moisture. The binder is generally added at the rate of 6 to 10 % and wax emulsion at the rate of 0.5 to 1.0% by weight of oven dry particles.

The lignocellulosic particles are obtained from stem, branches, lops and tops of trees as well as from agriculture residues such as cotton sticks, sugar cane bagasse and cereal stalks. These fibrous materials are shredded and disintegrated properly for producing adequate size particles for mixing with binder and other components.

The binder consists of urea formaldehyde syrup of about 60 to 70 % solids. The wax emulsion made by mixing water, wax and an emulsifier is added to the binder solution before mixing it with particles to incorporate water repellency in the board.

The particles, before blending with binder and wax emulsion, are dried to 8 to 12 % moisture. Particles having greater quantity of moisture can also be mixed with binder but the pressing operation is adversely affected. The higher the moisture content of the mat, the longer it takes to press a board. In addition to longer pressing time, the board may blow apart if the press is not breathed properly during pressing.

2.1 Designing a particleboard panel

In addition to properties of raw materials, their quantitative proportion is very important for controlling the economics of board production and board properties. Inadequate quantity of binder causes weak bonding, lesser compaction and lower strength properties. Improper addition or insufficient amount of water repelling agent makes the board less resistant to humidity and moisture.

In addition to affecting board properties, an increase in the quantity of binder makes the board costly and increases air pollution, health hazards and machining problems. Therefore proper estimation and computation of board components prior to their mixing can ensure proper designing and achievement of desired properties in a board. The quantities of different components in a particleboard panel are calculated on the basis of board parameters such as board dimensions, rate of wax emulsion addition, rate of binder addition and board moisture. The oven dry quantities of board

components in a particleboard panel having parameters stated in 2.1.1, can be estimated according to procedures in 2.1.2.

2.1.1 Board parameters

(a) Board dimensions

- length (L) = 2.438 meters (8 feet)
- width (B) = 1.219 meters (4 feet)
- thickness (T) = 13 mm = 0.013 meter (0.5 in)

(b) Rate of wax emulsion addition = 1 % by weight of oven dry particles

(c) Rate of binder addition = 7 % by weight of oven dry particles

(d) Board density = 600 kg / m^3

(e) Board moisture = 10 % by weight of air dry mass of board

2.1.2 Oven dry quantities of different components in a particleboard panel

(a) Total mass of panel (air dry)

= Board density x Board volume

= (D) x (V)

= 600 x 0.03864

= 23.181 Kg ...(M)

(b) Quantity of oven dry particles, adhesive, wax in the panel = oven dry panel mass

= (Air dry panel mass) - (Quantity of moisture in a panel)

= (M) - (m)

= 23.181 - 2.3182

= 20.863 kg... (PAW)

(c) Quantity of oven dry particles in the panel

$$= \frac{\text{Oven dry panel mass} \times 100}{100 + \text{adhesive}(\%) + \text{Wax}(\%)}$$

$$= \frac{(PAW) \times 100}{108}$$

$$= \frac{20.863 \times 100}{108}$$

$$= 19.318 \text{ kg} \qquad \ldots (P)$$

(d) Quantity of oven dry adhesive in the panel

$$= \frac{\text{Oven dry particles} \times \text{adhesive}(\%)}{100}$$

$$= (P) \times \frac{7}{100}$$

$$= \frac{19.318 \times 7}{100}$$

$$= 1.352 \text{ kg} \qquad \ldots (A)$$

(e) Quantity of oven dry wax in the panel

$$= \frac{\text{Oven dry particles} \times \text{wax}(\%)}{100}$$

$$= \frac{19.318 \times 7}{100}$$

$$= 0.193 \text{ kg} \qquad \ldots (W)$$

Summary of these calculation procedures is shown in Fig.1

The quantities of different board components in commercial size particleboard panels of following parameters have been computed and stated in appendices 1 to 8.

(a) board density = 400 to 1000 kg/m^3

(b) rate of binder addtion = 7 to 10 %

(c) rate of wax emulsion addition = 1 %

(d) board moisture = 10 %

Total air dry weight of panel (M = kgs)

P.A.W	m (kgs)	23·181

M = D × L × W × T (600 × 2.438 × 1.219 × 0·013 meters)

Moisture @ 10 % by weight of air dry panel (m) m

P.A.W	(oven dry)	20·863	2.318

M × 0.1 = m

Particles (P) A & W m

P	(oven dry)	19·317	1·546	2.318

P = PAW × 100 / 108

Adhesive @ 7% and Wax @ 1 % A W m

P	(oven dry)	19·317	1.352	0·193	2.318

0·07 × P = A , W = P × 0·01

Fig. 1 Summary of the calculation procedures (Cummulative quantitative composition of a particleboard panel of density (D) 600 kg/m3

(e) board dimensions

- length = 8 feet (2.438 meters)
- width = 4 feet (1.219 meters)
- thickness = 0.5 & 0.75 inches (13 & 19 mm)

Now it is very important to note that neither the board components are available in oven dry form nor they can be mixed together as such even if they are made available. It is therefore required to know the quantities of board components in the available or readily mixable form. This can be done as in 2.1.3.

2.1.3 Quantity of readily mixable form of board components in a panel

The readily mixable form of board components are the particles at 9 to 13 % moisture content, adhesive syrup at 30 to 40 % moisture content or 60 to 70 % solid content and wax emulsion at 70 to 72 % moisture content or 28 to 30 % solids content. After determining the quantity of oven dry components in a board (2.1.2), the quantity of readily mixable form of board components can be calculated as tabulated below:

Type of board component	Specifications of available board components		Calculated quantity of oven dry board components	Quantity of readily mixable form of board components
	M C* (air dry base) (%)	solid content (100-MC) (%)	(kg)	O.D Wt x 100 / solid content (%)
- Particles	10	90	19.318	21.464
- Binder	35	65	1.352	2.081
- Wax sol.	72	28	0.193	0.689
Total oven dry panel mass = 20.863				

* moisture content

3 MEASUREMENT OF SOME PHYSICAL PROPERTIES OF RAW MATERIALS

Some physical properties of raw material influence the properties of board and the manufacturing processes. For example: the greater the moisture content of wood, the easier it is to convert it into particles and the longer it will take to dry them. The greater the moisture in wood, the better will be the geometry of particles and longer the life of cutting tools and vice versa. The presence of moisture in wood makes it heavier and increases the cost of transportation.

Wood density also influences the manufacturing processes and board properties. It affects the particles manufacturing and wood transportation costs positively. It lowers the life of cutting tools and influences the particle geometry negatively. Similarly, the solid content of adhesives and additives also influence the board manufacturing processes, board properties and cost of production. The different properties of raw material are determined as under:

3.1 Moisture content of wood

In general, woody raw material for particleboard manufacturing consists of assorted size round wood. In such cases, take a representative sample consisting of different size material from a lot. If the wood lot consists of different diameter pieces, cut about 5 cm thick discs from the different pieces with hand saw or band saw and wrap them in plastic bags to avoid immediate release of moisture before weighing.

Mark the discs as S_1, S_2.....S_n. Weigh each disc to an accuracy of 0.1 gms and dry in an oven at 105 $\pm$ 2^{0}C till they attain constant weight. Although the rate of moisture evaporation depends upon the diameter/thickness of wooden piece, in general the different size test specimens acquire constant weight after 24 to 48 hours of drying. Weigh the oven dried discs to an accuracy of 0.1 gm and calculate the moisture content of each disc as under:

$$M\ C_{(S1)}\ \% = (W_1 - W_2)100 / W_2$$

Where W_1 = Weight of disc S_1 before drying

W_2 = Weight of disc S_2 after drying

$M\ C_{(S1)}\ \%$ = Moisture content of disc S_1 as percent of its oven dry weight.

Similarly determine the moisture content of discs S_2, S_3..... S_n, Compute the mean value and record it as the moisture content of the wood lot.

$$\text{M C of wood lot (\%)} = \frac{MC_{S1} \quad MC_{S2} + \ldots\ldots\ldots MC_{Sn}}{n}$$

Where

$M\ C_{(S1)}$ = Moisture content of disc S_1

$M\ C_{(S2)}$ = Moisture content of disc S_2

$M\ C_{(Sn)}$ = Moisture content of disc S_n

n = Total number of discs

Proforma P-1 is used to record data of this experiment. Information on moisture present in wood can be reported as percent of its oven dry weight or air dry weight as shown below:

(a) M C as % of air dry weight of wood $= \dfrac{W_1 - W_2 \times 100}{W_1}$

(b) M C as % of oven dry weight of wood $= \dfrac{W_1 - W_2 \times 100}{W_2}$

Oven dry weight based moisture content (%) is the quantity of moisture present in 100 gms of oven dry wood. Air dry weight based moisture content (%) is the quantity of moisture present in 100 gms of green/wet wood.

For the same wood sample the value of both these types of moisture contents are quite different. Moisture content as % of air dry weight of wood is lesser as compared to oven dry weight based moisture. This is shown in the following example:

<u>EXAMPLE</u>

Suppose W_1 = 80 gms (weight before drying)

W_2 = 60 gms (weight after drying)

a) M C as % of air dry weight of wood =
= (80 - 60)100 / 80 = 25 %

b) M C as % of oven dry weight of wood =
= (80 - 60)100 / 60 = 33.3 %

Air dry weight based moisture content never exceeds 100 where as the oven dry weight based moisture content may exceed 100.

100 - M C = solid content of a material (provided M C is calculated on air dry weight basis)

3.2 Moisture content of particles

Take a glass or aluminum beaker/bowl and weigh it. Take about 100 gms of particles in the beaker/bowl and weigh again and dry them in the oven at 105± 2°C. During drying stir the particles to ease moisture evaporation. After about 24 hours take the beaker out of oven and desiccate it for about 15 minutes followed by weighing. The weighing in all cases should be done to an accuracy of 0.1 gms. Calculate the moisture content as below:

$$MC\% = (W_1 - W_2)\ 100/W_2$$

Where W_1 = Weight of particles before drying (without container)

W_2 = Weight of particles after drying (without container)

MC% = Moisture content as percent of oven dry weight of particles.

Proforma P-2 is used to record data of this experiment.

3.3 Wood density measurements with the help of dimensional measurements.

Density of wood or any material is its mass per unit volume. For determining the density of wood take about ten specimens of size 2.5 cm x 2.5 cm x 5.0 cm. The edges of each specimen should be clean and straight. Mark them as S_1, S_2,..... S_n. Measure the dimensions of each specimen to an accuracy of 0.1 mm and weigh to an accuracy of 0.1 gram and calculate the density as under:

$$D_{(S1)} = M_1 / V_1$$

Where $D_{(S1)}$ = Density of specimen S_1

M_1 = Mass of specimen S_1

V_1 = Volume of specimen S_1 (length x width x thickness)

Similarly determine the density of other specimens, compute the mean value as under and record it as the density of wood lot.

$$D = \frac{D_{(S1)} + D_{(S2)} + \ldots\ldots D_{(Sn)}}{n}$$

Where D = Density of wood lot

$D_{(S1)}$ = Density of specimen S_1

$D_{(S2)}$ = Density of specimen S_2

$D_{(Sn)}$ = Density of specimen S_n

n = Total number of specimens

After determining the density, determine the moisture content of each specimen as in 3.2. The moisture content variation would help in explaining the variation in the density of different specimens.

Proforma P-3 is used to record the data of this experiment.

3.3.1 Units of density

(a) The density is recorded as kg/m^3, when the weight is in kilograms and volume in cubic meters i.e. length, width and thickness are all in meters.

(b) The density is recorded as gm/cm^3, when the weight is in grams and volume in cubic centimeters i.e. length, width and thickness... all in centimeters.

(c) The density is recorded as lbs/cft, when the weight is in pounds and volume in cubic feet i.e. length, width and thickness... all in feet.

3.3.2 Length, Width and thickness measuring tools.

The length and width of the specimens is measured with the help of instruments capable of measuring to an accuracy of at least 0.1 mm. Generally, a vernier calliper (Fig.2) is used for such measurements. Micrometer (Fig. 3) is used for measuring thickness of particles as well as particleboard. These tools measure the length and width very precisely even to an accuracy of 0.01 mm but they need a skilled worker as it is a bit difficult to read them and

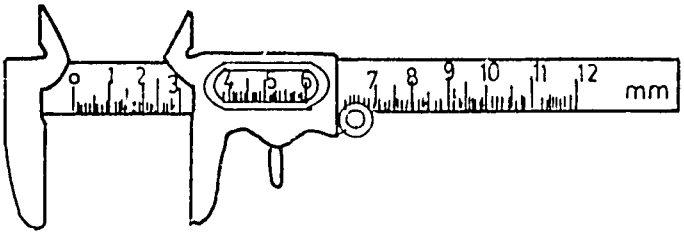

Fig. 2 Vernier Calliper Commonly used for length and width measurements.

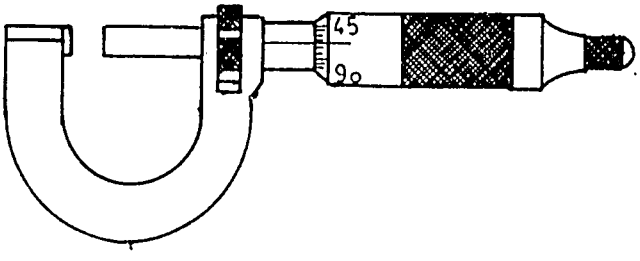

Fig. 3 Micrometer commonly used for thickness measurement.

therefore, the worker has to do with lesser number of readings. To overcome these difficulties, PFI has developed a CW Gauge (Fig.4) for length and width measurements. This tool is very easy to use and can be easily manufactured in local workshops.

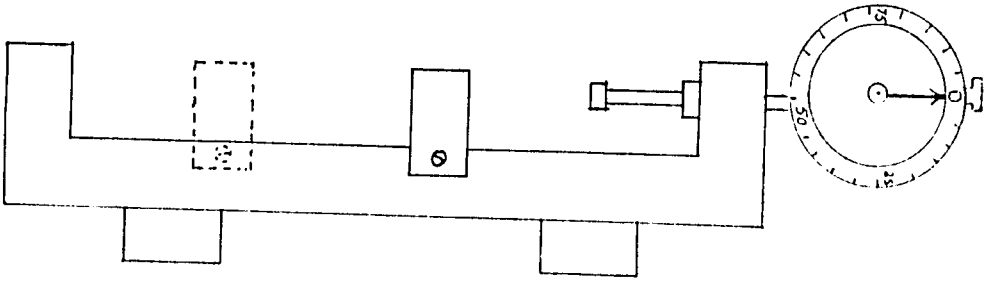

Fig. 4 C.W Gauge for measuring length and width of specimen.

3.3.3 Volume Measuring Tools.

Volume can be determined by measuring the length, width and thickness of a wooden piece and then calculating the product of LWT as below:

$$\text{Volume} = L \times W \times T$$

Where L = length

W = Width

T = Thickness

All the dimensions are either in centimeters or inches. When the dimensions are in centimeters the volume is in cubic centimeters and if the dimensions are in inches the volume is in cubic inches.

The volume can be directly measured with the help of volumeter (Fig. 5) also. With this equipment, it is very easy to measure the volume but only very small specimens can be used.

The volume of a wooden piece can also be measured by water displacement techniques as shown in 3.4 and 3.5 below.

3.4 Determination of density of wood by water displacement technique - (Method I).

Take about ten specimens. Mark them S_1, $S_2 \ldots S_n$. Weigh each specimen in air and then in water (Fig. 6). Calculate density of each specimen as under:

$$D_{(S1)} = \frac{W_1}{W_1 - W_2}$$

Where $D_{(S1)}$ = Density of specimen S_1

W_1 = Weight of specimen S_1 in air

W_2 = Weight of specimen S_2 in water

$W_1 - W_2$ = loss in weight

= volume of specimen S_1

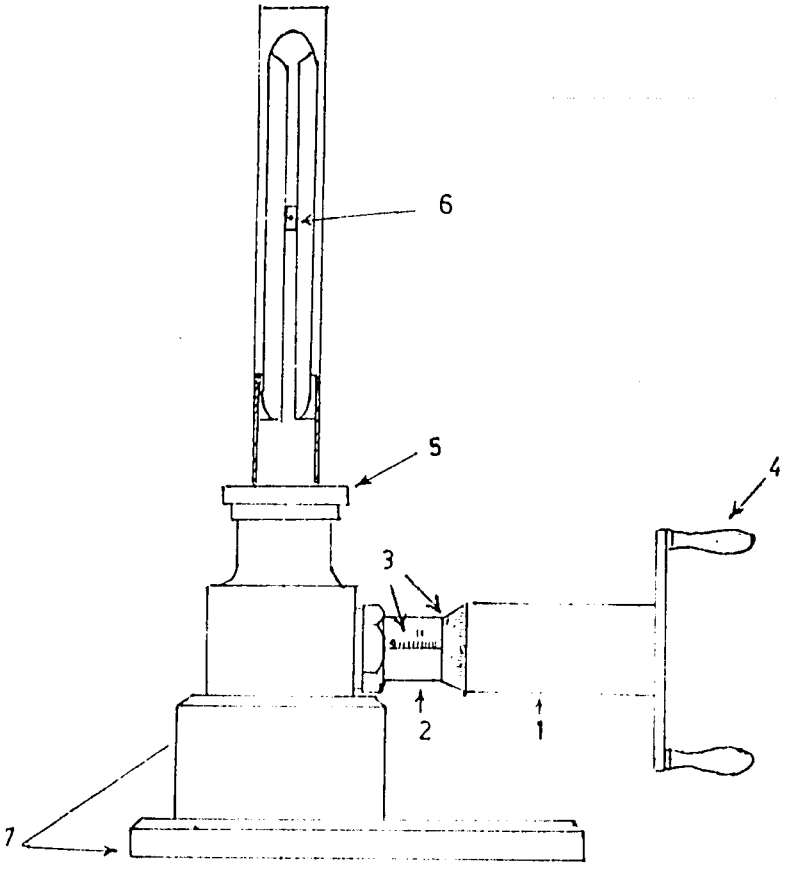

Fig. 5 Volumeter for determining the volume of a specimen (1. micrometer tube 2. stem 3. scale 4. handle 5. cover 6. index 7. wooden base).

Similarly determine the density of the other specimens, compute the mean value as under and record it as the density of wood lot.

$$D = \frac{D_{(S1)} + D_{(S2)} + \ldots D_{(Sn)}}{n}$$

Where D = Density of wood lot

$D_{(S1)}$ = Density of specimen S_1

$D_{(S2)}$ = Density of specimen S_2

$D_{(Sn)}$ = Density of specimen S_n

n = Total number of specimens

Proforma P-4 is used to record the data of this experiment. Determine the moisture content of each specimen as in 3.2, for predicting the causes of density variation between the specimens.

3.5 Determination of density of wood by water displacement technique - (Method II).

Take about ten specimens of any suitable size. Mark them as S_1, S_2 .... S_n. Weigh each sample in air then take a bucket or any other container having enough water to submerge wooden piece of which the density is to be determined. Weigh the container having water, on a balance. Hold the specimen S_1 inside water contained in the bucket while it is on the balance. The wooden piece should not touch the sides of the container. It can be held so by hanging it with a piece of thread fixed to a stand or by holding a nail fixed into the specimen (Fig. 7). Weigh the water container having specimen inside the water and calculate its density as below:

$$D_{(S1)} = W_1 / (W_3 - W_2)$$

Where $D_{(S1)}$ = Density of specimen S_1

W_1 = Weight of specimen S_1 in air

W_2 = Weight of bucket or container having water only.

W_3 = Weight of bucket or container having water and specimen S_1 held inside it.

$W_3 - W_2$ = Volume of specimen S_1

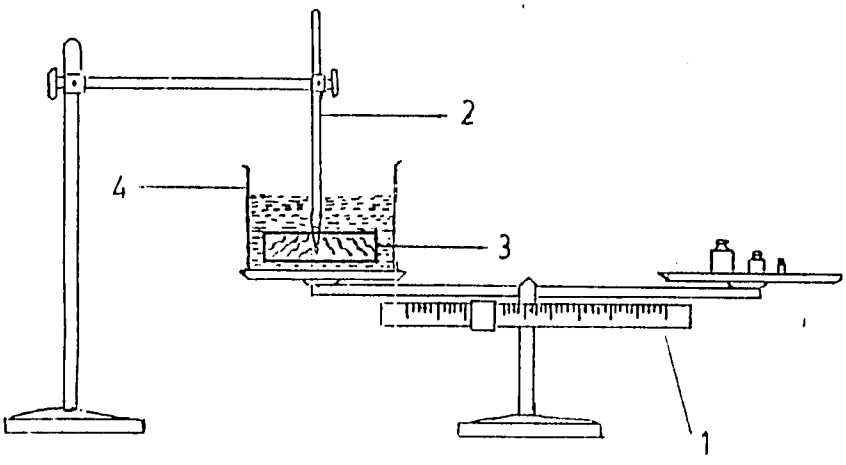

Fig. 6 Determination of density of wood by water displacement technique (Method-I) 1. Tripple beam balance 2. Spoke for holding test specimen 3. test specimen 4. water container.

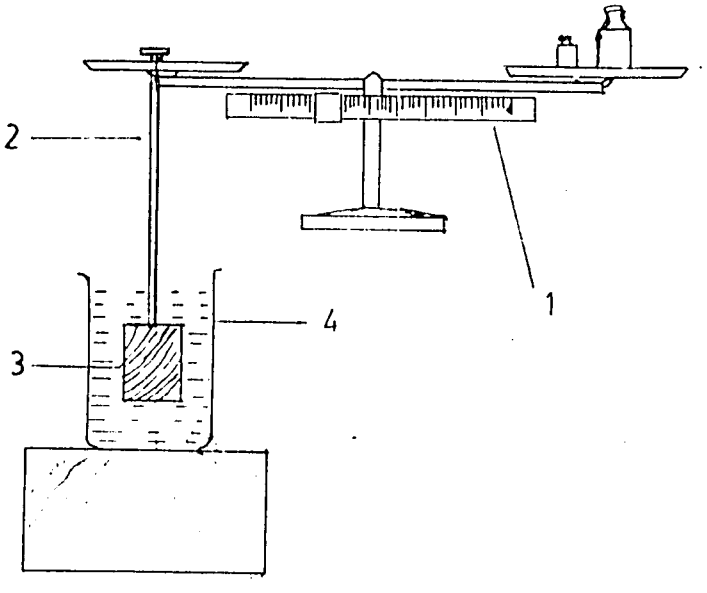

Fig. 7 Determination of density of wood by water displacement technique (Method II) 1. Tripple beam balance 2. Spoke for holding test specimen 3. test specimen 4. water container.

Similarly determine the density of other specimens, compute the mean value as in 3.5 and report it as the density of wood lot. Proforma P-5 is used to record data of this experiment

3.6 Basic density of wood.

Basic density of wood is determined by using the following expression:

$$\text{Basic density} = \frac{\text{Oven dry weight of wood}}{\text{green volume of wood}}$$

OR

$$= \frac{\text{Oven dry weight of wood}}{\text{Loss in weight in water}}$$

Loss in weight in water is determined as described in 3.4 or 3.5.

3.7 Solid content of adhesive and wax emulsion solutions

Information on solid content of adhesive solution is useful in determining the quantity of adhesive solution required to make a board. For determining the solid content of binder take a watch glass and weigh it on a balance to an accuracy of 0.1 gm. Take about 50 gms of the adhesive or wax emulsion on watch glass and weigh it again.

Dry the sample in the oven at 105 ± 2°C. Stir the sample gently with a glass rod during drying. After about 24 hours, desiccate it for about 15 minutes followed by weighing on the same balance used before. Solid content is calculated as under:

Moisture content(%) = $(W_1 - W_2)100 / W_1$

Where W_1 = weight of adhesive (without container) before drying

W_2 = weight of adhesive (without container) after drying

$W_1 - W_2$ = loss of moisture

Solid content(%) = $W_2 \times 100 / W_1$

OR

Solid content(%) = 100 - MC

Determine the solid content of at least five samples and take the average solid content for further use.

Similarly, determine the solid content of wax emulsion.

For recording the data on experiments carried out for determining the solid contents of binder and wax emulsion, proformas P-6 and P-7 are used respectively.

3.8 Preparation of adhesive solution

In Pakistan, Urea formaldehyde is the major adhesive used in particleboard manufacturing. It is available in liquid form and its manufacture by the local industry has been recently started. The liquid urea formaldehyde has different grades/brands for plywood and particleboards. In general, ammonium chloride is commonly used as hardener. However, different manufacturers supply some specific commercial hardener with their adhesive brand. The mixing of hardener with the adhesive syrup is carried out according to manufacturer's specifications. Wax emulsion is mixed with the adhesive solution before spraying onto the particles. The wax emulsion is added to the adhesive solution slowly and mixed thoroughly by stirring with electric stirrer.

3.9 Preparation of wax emulsion

Wax emulsion may or may not be available in a readily usable form. It can be easily prepared in the laboratory by mixing adequate quantities of wax, water and emulsifier. The emulsifier is made by mixing concentrated liquid ammonium hydroxide with powdered stearic acid in equal quantities. Excess ammonium hydroxide is used for dissolving stearic acid completely and converting it into ammonium stearate which acts as emulsifier. Wax is mixed with boiling water and the emulsifier is added slowly while stirring with electric stirrer. The mixing ratio of water, wax and emulsifier is 71 : 25 : 4.

3.10 Bark quantity in wood (Method-I)

Cut a wood disc about 5 cm thick from a log containing bark and weigh it with the bark. Then remove the bark with a debarker or a chisel and weigh it again. The weighing accuracy in each case should be 0.1 gram. The quantity of bark can be reported as percent of barked wood or unbarked wood and is calculated as under:

a) Quantity of bark as percent of barked wood. $= (W_1 - W_2)100 / W_1$

Where W_1 = Weight of wood with bark.

W_2 = Weight of wood without bark.

$W_1 - W_2$ = Weight of bark

b) Quantity of bark as percent of unbarked wood. = $(W_1 - W_2)100 / W_2$

Where W_1 = Weight of wood with bark

W_2 = weight of wood without bark

For determining the quantity of bark in a tree, take at least ten discs from different places in the stem and determine the quantity of bark in each disc and calculate the mean value.

3.11 Bark quantity in wood (Method II)

Cut a wood disc from a log containing bark. Determine the volume of disc with bark by water displacement method as stated in 3.4 or 3.5. Then remove the bark with a debarker or a chisel. Determine the volume of wood disc without bark with the help of water displacement method and calculate the quantity of bark as below:

(a) Quantity of bark as percent of barked wood = $(V_1 - V_2)100 / V_1$

Where V_1 = Volume of wood disc with bark

V_2 = Volume of wood disc without bark

$V_1 - V_2$ = Volume of bark

b) Quantity of bark as percent of debarked wood OR wood without bark = $(V_1 - V_2)100 / V_2$

To know the variation in the quantity of bark in a tree, take at least 10 discs from different places in a wood lot or a tree and determine the quantity of bark in them separately and calculate the mean value.

3.12 Density of bark in wood

Take about 8 cm thick disc from a log with bark. Determine the density of this disc by water displacement method as in 3.4 or 3.5. Then remove the bark of disc with debarker or a chisel and determine the density of wood disc by water displacement method as in 3.4 or 3.5 and calculate the density of bark as under:

Density of bark = $D_1 - D_2$

Where D_1 = Density of wood disc with bark

D_2 = Density of wood disc without bark

4. APPLICATION OF WOOD DENSITY AND MOISTURE CONTENTS

The information on wood density and moisture content is very useful in determining the absolute quantity of wood in a lot as well as in comparing the quantity of wood in different lots. Some of the practical applications of wood density and moisture content are described below:

4.1 Application of wood density in estimating the weight of wood

If the VOLUME of wood contained in a truck is known, it is possible to calculate the WEIGHT by using density information as shown in the example given below:

Example

- Suppose volume of wood contained in truck = 3.0 m^3
- If density of wood = 800 kg/m^3 (Wood density can be determined or taken from the literature for a species)
- The WEIGHT of wood contained in the truck = Density x Vol. of wood

  = 800 x 3.0 =

  = 2400 Kg OR, 2.4 Tons

This is because $D = M / V$

$M = D \times V$

Where D = Density

V = Volume of wood

M = Mass or weight

4.2 Application of wood density in estimating the VOLUME of wood in a truck

If the WEIGHT of wood contained in the truck is known, it is possible to estimate its VOLUME by using wood density information.

Example

- Suppose the weight of wood contained in a truck = 1600 kg
- If density of wood = 800 kg/m^3

  (Wood density can be determined or taken from the literature if the name of the species is known)

- The volume of wood contained in the truck = Mass / density

  = 1600 / 800

  = 2 m^3

This is because $D = M / V$

$D \times V = M$

$V = M / D$

4.3 Application of moisture content of wood in estimating the absolute quantity of wood in a truck or a wood lot.

Comparison between the cost of wood purchased from different lots can only be made if the absolute quantity (oven dry weight) of wood contained in a wood lot is known. By using moisture content information, oven dry quantity of wood contained in a wood lot can be easily determined as under:

Example I

- Suppose the weight of wood in a wood lot or truck = 400 kg

- If the moisture content of wood (O.D basis) = 20 % (by weight of oven dry wood)

  - Then the weight of oven dry wood $= \frac{100 \times \text{weight of wood}}{(100 + MC\%}$

$$= \frac{200 \times 400}{120}$$

$$= 333.33 \text{ Kg}$$

Example II

- Suppose the weight of wood contained in a wood lot or truck is: = 400 Kg

- If the moisture content of this wood is known, e.g. (A.D. basis) = 20 % (by weight of air dry wood)

- Then the weight of oven dry wood $= \frac{(100 - MC\%) \text{ weight of wood}}{100}$

$$= \frac{(100 - 20)\ 400}{100}$$

$$= \frac{80 \times 400}{100}$$

$$= 320 \text{ Kg}$$

5. MEASUREMENT OF PHYSICAL AND MECHANICAL PROPERTIES OF PARTICLEBOARD

Measurement of physical and mechanical properties of particleboard is done according to standard procedures outlined in the STANDARDS adopted or developed by a country. Such standards are needed by both the manufacturers and the consumers because they provide a basis for comparison and estimating the level of quality of a product. A product meeting the standard requirements can be used for producing structures of desired properties with a high degree of confidence.

For obtaining confidence in the values determined for different properties, proper sampling is very necessary. From a lot or shipment of particleboard panels a representative sample consisting of two or three panels is taken for measuring various properties. From each panel the test specimens are obtained from different places to study the variation. If there is a considerable variation in the values obtained for a specific property, the number of test specimens is increased. If the mean value still does not fall within the acceptable limits recommended by the standard, it means that the panel does not conform to the standard and should be discarded.

Test specimens are made in the planes of both the longer dimension (length) and shorter dimension (width) of the panel. There is no limit to the number of test specimens to be taken for a specific test. However, in the interest of confidence in values obtained, at least ten specimens are taken for evaluating each property.

The standard procedures stated in the standards adopted or developed may differ to some extent. However, the different physical and mechanical properties are generally determined as under:

5.1 Physical properties

Physical properties of a panel include moisture content, density and dimensional changes such as linear expansion, thickness swelling and water absorption etc. Dimensional changes are measured in the form of increase in thickness, length and weight of board subjected to humid atmosphere or water contacts. These properties are very important because the measures of moisture content and increase in dimensions under varying exposure conditions help in predicting the durability of a panel on its exposure to weather changes. For measuring the physical properties of particleboard, following procedures are generally used.

5.1.1 Moisture content of particleboard panel

For determining the moisture content of a panel, take test specimens of size 75 x 150 mm and mark them as S_1, S_2... S_n. Weigh each specimen to an accuracy of 0.01 gram and dry in the oven at 105 ± 3°C for about 24 hours. After drying, desiccate them for 15 minutes and weigh again. Calculate the moisture content of specimen S_1 as under:

$$MC_{(S1)}\% = 100\ (W\ 1 - W\ 2)\ /\ W_2$$

Where W_1 = weight of test specimen S_1 before drying

W_2 = weight of test specimen S_1 after drying

$MC_{(S1)}$ % = Moisture content of specimen S_1 as % of W_2.

Similarly determine the moisture content of other specimens, compute the mean value and record it as the moisture content of a panel.

$$\text{Moisture content of a panel} = \frac{MC_{(S1)} + MC_{(S2)} + .. MC_{(Sn)}}{n}$$

Where $MC_{(S1)}$ = Moisture content of specimen $_{S1}$

$MC_{(S2)}$ = Moisture content of specimen $_{S2}$

$MC_{(Sn)}$ = Moisture content of specimen $_{Sn}$

Proforma P-8 is used to record the data of this experiment.

5.1.2 Density of particleboard panel

Density or specific gravity and moisture content information are required for studying the causes of variation in static bending and other properties. For determining the density, take test specimens of size 75 x 75 mm and mark them as S_1, S_2 ....S_n . Generally specimens of this size are recommended, however, greater size specimens can also be used.

For measuring this property, condition the test specimens at 65 ± 5% RH at 23 ± 2 °C for at least a week. Then take different measurements such as weight, length, width and thickness and calculate the density of each specimen as under:

$$D_{(S1)} = M / V$$

Where $D_{(S1)}$ = density of specimen S1

M = weight of S1 specimen after conditioning

V = Volume of S1 specimen after conditioning (length x width x thickness)

If M is measured in grams, length, width and thickness in centimeters, the density is calculated in grams per cubic centimeter.

Similarly calculate the density of other specimens, compute the mean value and record it as the density of a panel.

$$\text{Density of panel} = \frac{D_{(S1)} + D_{(S2)} \ldots D_{(Sn)}}{n}$$

Where $D_{(S1)}$ = density of specimen S1

$D_{(S2)}$ = density of specimen S2

$D_{(Sn)}$ = density of specimen Sn

n = Total number of specimens

Proforma P-9 is used to record the data of this experiment.

5.1.3 Water absorption by a particleboard panel during water soaking.

This property is useful for predicting the durability of particleboard in applications where the

structures come in contact with water occasionally or regularly. If the structure does not have the chances to come in contact with water, determination of this property is not necessary.

For measuring this property, take test specimens of size 150 x 150 mm. Drill a hole of 3 mm diameter near one corner of each specimen and condition them at 65% ± 5% RH at 23 ± 2^{0}C. Then weigh each specimen to an accuracy of 0.01 gram and stack them horizontally one upon the other in a tank of size 200 x 200 x 300 mm.

In between the specimens place crossers of size 12 x 12 x 180 mm at about 50 mm from the left and right edges. The crossers are arranged one upon the other. Then fill the tank with tap water and maintain the water level at least 25 mm above the surface of uppermost specimen by regulating the water flow into and out of the tank. Place some weight on the top specimen for keeping the stack submerged in water (Fig. 8).

Take out all the specimens from water after two hours and hang them vertically in the open air for about 10 minutes to get rid of superfluous water (Fig. 9). Place in between the test specimens about 25 mm long spacers made from pieces of plastic pipe. Then weigh each specimen on the balance used before and calculate the water absorption of each specimen as under. After weighing submerge the specimens again in water for further 22 hours.

$WA_{(S1)}\% = 100\ (W2 - W1)\ /\ W1$

Where W2 = weight of specimen S1 after water absorption

W1 = weight of specimen S1 before water absorption.

$WA_{(S1)}\%$ = water absorption of test specimen S1 as percent of W1.

Similarly determine and calculate the water absorption of other specimens, compute mean value and record it as the water absorption of a panel.

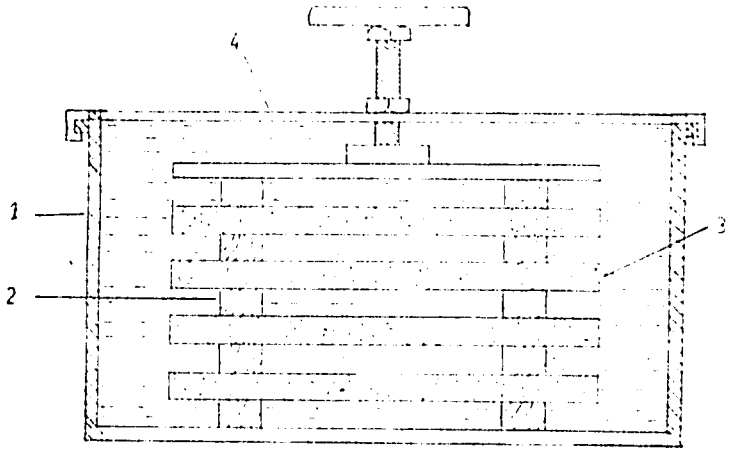

Fig. 8 Water soking assembly for water absorption test(1. water tank 2. wooden spacer or crosser 3. test specimen 4. clamp for holding the specimen in water).

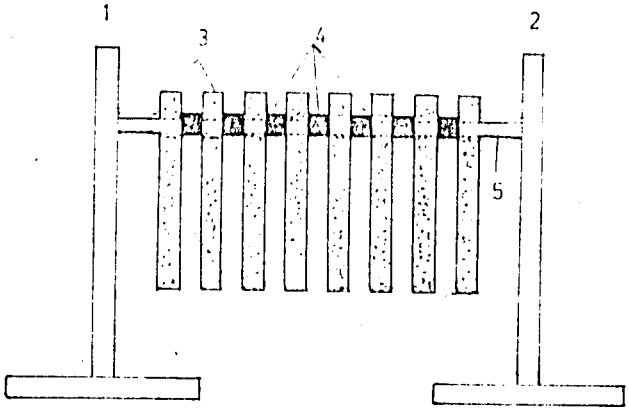

Fig. 9 Assembly for hanging test specimens after water soaking (1&2. stand supports 3. test specimens 4. spacers 5. steel rods).

$$\text{Water absorption of a panel} = \frac{WA_{(S1)} + WA_{(S2)} + .. WA_{(Sn)}}{n}$$

Where $WA_{(S1)}$ = water absorption of specimen S1

$WA_{(S2)}$ = water absorption of specimen S2

$WA_{(Sn)}$ = water absorption of specimen Sn

n = total number of specimens

Similarly determine the water absorption of each test specimen after 24 hours and record the value separately. Proforma P-10 is used for recording data of this experiment.

5.1.4 Thickness swelling of particleboard panel caused by water absorption.

Take 150 x 150 mm test specimens for measuring this property. Either new test specimens or those used for water absorption measurements can be used. In any case, with a copying pencil mark points A, B, C and D on the surface of each specimen (Fig 11) and condition them at 65 ± 5% RH at 23 ± 2^{0}C.

Then take thickness measurements at A, B, C and D to an accuracy of 0.01 mm with micrometer or some other thickness measuring gauge. Then soak the specimens in water (Fig. 8) Take the specimens out of water after two hours, hang them vertically in the open air for ten minutes (Fig. 9) and measure the thickness again at points A,B,C and D with the help of gauge used before. Submerge the specimens again in water for further 22 hours. Calculate the thickness swelling after 2 and 24 hours separately as under:

$$TS_A\ \% = 100\ (A' - A)\ /\ A$$

$$TS_B\ \% = 100\ (B' - B)\ /\ B$$

$$TS_C\ \% = 100\ (C' - C)\ /\ C$$

$$TS_D\ \% = 100\ (D' - D)\ /\ D$$

$$TS_{(S1)} = \frac{TS_A + TS_B + TS_C + TS_D}{4}$$

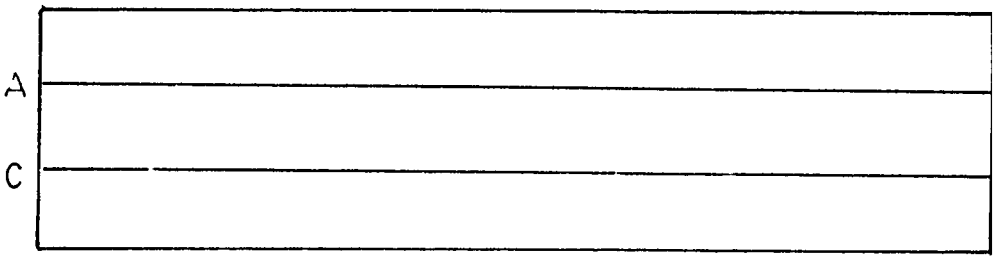

Fig. 10 Particleboard test specimen marked with length measuring points (Line AB and CD) before and after water soaking.

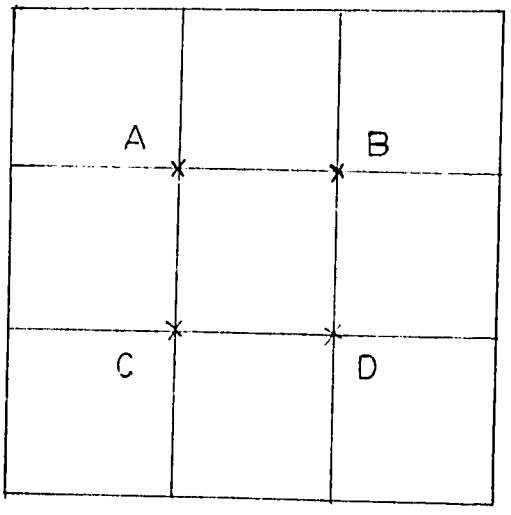

Fig. 11 Particleboard test specimen marked with points (A, B, C, D) for thickness measurements before and after water soaking.

Where TS_A, TS_B, TS_C and TS_D are thickness swelling values at points A, B, C and D separately on specimen S1 after two hours water soaking.

A',B',C',D'	=	thickness of specimen S1 at points A,B,C and D after two hours water soaking.
A, B, C, D	=	thickness of specimen S1 at points A, B, C and D before water soaking.
$TS_{(S1)}\%$	=	Thickness swelling of specimen S1

Similarly calculate thickness swelling of other specimens, compute the mean value as under and record it as the thickness swelling of a panel after two hours water soaking.

$$\text{Thickness swelling of a panel} = \frac{TS_{(S1)} + TS_{(S2)} + \ldots TS_{(Sn)}}{n}$$

Where $TS_{(S1)}$	=	thickness swelling of specimen S1
$TS_{(S2)}$	=	thickness swelling of specimen S2
$TS_{(Sn)}$	=	Thickness swelling of specimen Sn
n	=	total number of specimens

Similarly after 24 hours water absorption, determine the thickness swelling at each point on other specimens and compute mean value and record it separately as thickness swelling of a panel after 24th hours of water soaking. Proforma P-11 is used to record data on this experiment.

5.1.5 Linear expansion of particleboard panel in humid atmosphere.

Particleboard has the tendency to increase in dimensions when exposed to humid atmosphere for considerable time. This dimensional increase may damage the structure or the fixture if it exceeds the minimum acceptable limits stated in the standard. Hence information on increase in dimensions of a particleboard panel under humid exposures is necessary to predict the durability of the structure.

For measuring this property take 75 x 300 mm test specimens. Condition them at 30 ± 2% RH at 23 ± 2°C for at least one week. Mark lines AB and CD on the surfaces of specimens (Fig. 10) and measure their lengths to the accuracy of 0.01 mm.

Then condition the specimens at 90 ± 5% RH at 23 ± 2°C for at least one week. Then measure the length AB and CD on each specimen again and calculate linear expansion for specimen S_1 as under:

$$LE_{(AB)}\ \% = \frac{100\ (AB' - AB)}{AB}$$

$$LE_{(CD)}\ \% = \frac{100\ (CD' - CD)}{CD}$$

$$LE_{(S1)}\ \% = \frac{LE_{(AB)} + LE_{(CD)}}{2}$$

Where $LE_{(AB)}$ % = % increase in length of line AB

$LE_{(CD)}$ % = % increase in length of line CD

$LE_{(S1)}$ % = Average % increase in length of specimen S1.

AB' and CD' = length of lines AB and CD after exposing the test specimen to 90% RH

AB and CD = length of lines AB and CD before exposing the test specimen to 90% RH or after exposing it to 30% RH.

Similarly determine the value of LE for other specimens, compute mean value as under and record it as the linear expansion of a panel.

$$LE\% = \frac{LE_{(S1)} + LE_{(S2)} + \ldots\ldots LE_{(Sn)}}{n}$$

Where LE = linear expansion of a panel

$LE_{(S1)}$ = linear expansion of specimen S1

$LE_{(S2)}$ = linear expansion of specimen S2

$LE_{(Sn)}$ = linear expansion of specimen Sn

n = Total number of specimens

Proforma P-12 is used to record data of this experiment.

5.1.6 Thickness swelling of particleboard panel in humid atmosphere

For determining this property take 300 x 300 mm test specimens. Mark points A, B, C and D on each test specimen and condition them at 30 ± 5% RH at 23 ± 2°C for at least one week. Then measure thickness at points A,B, C and D and condition them at 90 ± 5% RH at 23 ± 2°C for at least one week. Then take thickness measurements at points A, B, C, D again and calculate thickness swelling of specimen S1 as under;

$$TS_{(A)}\% = \frac{100\ (A' - A)}{A}$$

$$TS_{(B)}\% = \frac{100\ (B' - B)}{B}$$

$$TS_{(C)}\% = \frac{100\ (C' - C)}{C}$$

$$TS_{(D)}\% = \frac{100\ (D' - D)}{D}$$

$$TS_{(S1)}\% = \frac{TS_{(A)}\% + TS_{(B)}\% + TS_{(C)}\% + TS_{(D)}\%}{4}$$

Where A',B',C'and D' = Thickness of test specimen S1 at points A,B, C and D after exposing it to humid atmosphere.

A, B, C and D = Thickness of test specimen S1 at points A, B, C and D after exposing it to 30% RH or before exposing it to 90% RH.

$TS_{(A)}\%$ $TS_{(B)}\%$, $TS_{(C)}\%$, and $TS_{(D)}\%$ are the values of % increase in thickness at points, A, B, C and D. $TS_{(S1)}\%$ is the average thickness swelling of specimen S1.

Similarly calculate thickness swelling at different points on each specimen, compute the mean value and record it as the thickness swelling of a panel.

$$\text{Thickness swelling of a panel} = \frac{TS_{(S1)} + TS_{(S2)} \ldots TS_{(Sn)}}{n}$$

Where $TS_{(S1)}$ = thickness swelling of specimen S1

$TS_{(S2)}$ = thickness swelling of specimen S2

$TS_{(Sn)}$ = thickness swelling of specimen Sn

n = Total number of specimens

Proforma P-13 is used to record data of this experiment.

5.2 Mechanical Properties

5.2.1 Modulus of Rupture

In technical terms modulus of rupture (MOR) is an approximation of the true stress because it is the computed maximum fiber stress in the extreme upper and lower surface fibers of the specimen under test. In simple terms MOR is regarded as the breaking strength of the product and is reported in kilograms per centimeter square, pounds per inch square or pascals. Common terms used interchangeably with MOR are bending strength and flexural strength.

For measuring this property take 75 x 350 mm test specimens and mark them as S1, S2.....Sn. The length of the load span is about 24 times the thickness of the panel. The test assembly for this test consists of a sturdy base fitted with two supports, a loading head and provision for the fixing of a dial indicator for measuring the deflection (Fig. 12). For measuring MOR the specimen is placed on the supports and the load is applied in the middle of the specimen by loading head at an even rate.

In general the rate of load application is 6 to 25 mm per minute for 12 to 25 mm thick specimens. The lesser the thickness lower is the loading rate. When the load is applied, the test specimen ultimately fractures. The load at this point is called failing load and is recorded to an accuracy of 0.5 Kg. MOR for the test specimen is calculated as under:

$MOR_{(S1)} = 3\ PL/2\ bd^2$ OR $1.5\ PL/bd^2$

Where MOR = Modulus of rupture

P = Ultimate failing load

L = length of span (distance between the centres of supports)

b = width of the test specimen

d = mean thickness of the test specimen

If P is measured in kilograms and the dimensions L, b and d in centimeters, MOR is calculated in Kg/cm^2.

For predicting the causes of variation in failing load, the density of each specimen is computed by using the dimensions of the test specimens measured before testing.

Similarly determine the MOR of other specimens and compute the mean value as under and record it as the MOR of a panel.

$$\text{MOR of a panel} = \frac{MOR_{(S1)} + MOR_{(S2)} + \ldots\ldots MOR_{(Sn)}}{n}$$

Where $MOR_{(S1)}$ = MOR of specimen S1

$MOR_{(S2)}$ = MOR of specimen S2

$MOR_{(Sn)}$ = MOR of specimen Sn

n = total number of specimens

Proforma P-14 is used for recording data of MOR measurements.

5.2.2 Modulus of Elasticity (MOE)

This property indicates the stiffness of the material and is useful in calculating the deflection of the product under stress. For measuring this property test assembly is the same as that for MOR testing (Fig. 12). The only difference is that the deflection of the specimen is also measured while determining failing load. For measuring the deflection of the specimen, a dial indicator is fixed to the base of the testing tool (Fig. 13).

The load deflection curve is drawn between the load and the deflection of the test specimen. From the curve, load at proportional limit is measured (Fig. 14). Modulus of elasticity or the stiffness of each specimen is measured as under:

$$E = P_1 L^3 / 4b\, d^3\, y1$$

Where E = Modulus of elasticity

P_1 = load at proportional limit

L = Length of span (distance between the centres of supports)

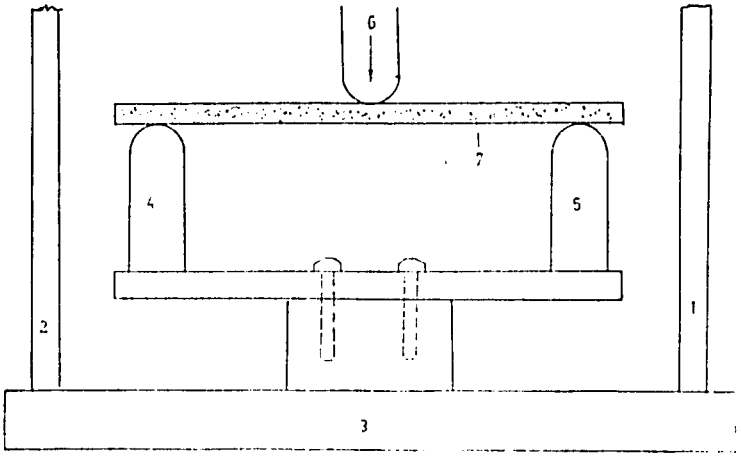

Fig. 12 Test assembly for Modulus of Rupture(MOR) test (1&2 machine supports 3. support base 4&5. bearing blocks 6. loading blocks 7. test specimen).

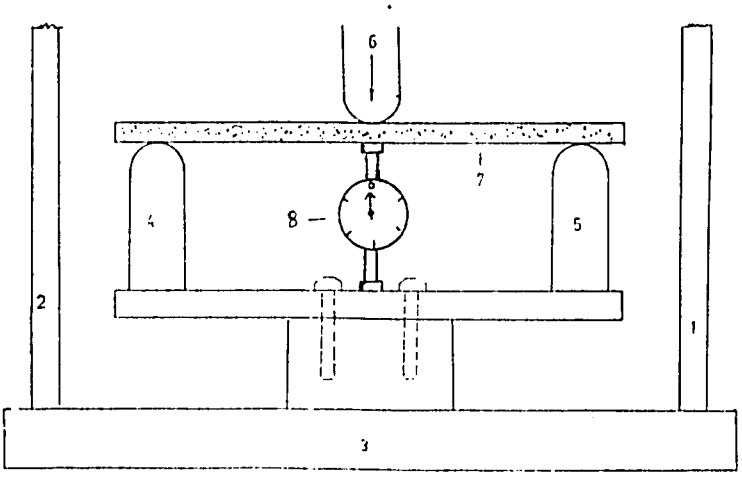

Fig. 13 Testaassembly for Modulus of Elasticity (MOE) test (1&2. machine supports 3. support base 4&5. bearing blocks 6. loading blocks 7. test specimen 8. dial gauge).

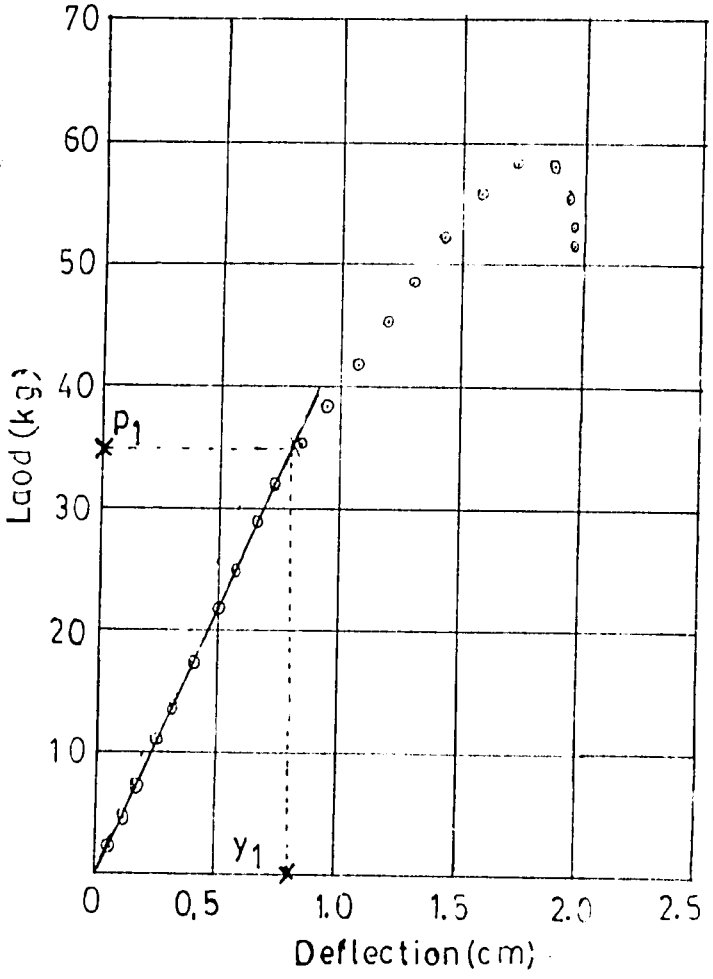

Fig. 14 Determination of load at proportional limit from a load deflection curve.

P_1 = load at proportional limit (kg).

y_1 = center deflection at proportional limit load (cm).

b = Width of the specimen

d = Thickness of specimen

y1 = deflection at proportional limit load.

If P_1 is measured in kilograms, L,b, d and y1 in centimeters, E is calculated in kg/cm^2

Similarly determine the MOE of other specimens and compute the mean value as under and report it as the MOE of a panel.

$$\text{MOE of a panel} = \frac{MOE_{(S1)} + MOE_{(S2)} + \ldots MOE_{(Sn)}}{n}$$

Where $MOE_{(S1)}$ = MOE of specimen S1

$MOE_{(S2)}$ = MOE of specimen S2

$MOE_{(Sn)}$ = MOE of specimen Sn

n = Total number of specimens

Proforma P-15 is used to record data on MOE measurements.

5.2.3 Internal Bond Strength OR Tensile Strength Perpendicular to the surface

The measure of this property indicates that how well the particles in a panel are bonded together. For measuring this property, take test specimens of size 50 x 50 mm and mark them as S1, S2,...Sn. Glue the test specimen on the wooden blocks and allow them to cure for one week.

Then pull apart the blocks by using the testing assembly consisting of two pulling jigs and a force measuring recorder. The lower jig is held tightly by the jaws fitted in the base of the testing machine. The upper jig fitted in the movable head holds the wooden blocks tightly while it moves up to pull apart the test specimen. The pulling force is applied at a uniform rate in a direction at right angles to the faces of the blocks(Fig. 15). Maximum failing load at which the specimen breaks apart is recorded and the internal bond strength is calculated as below:

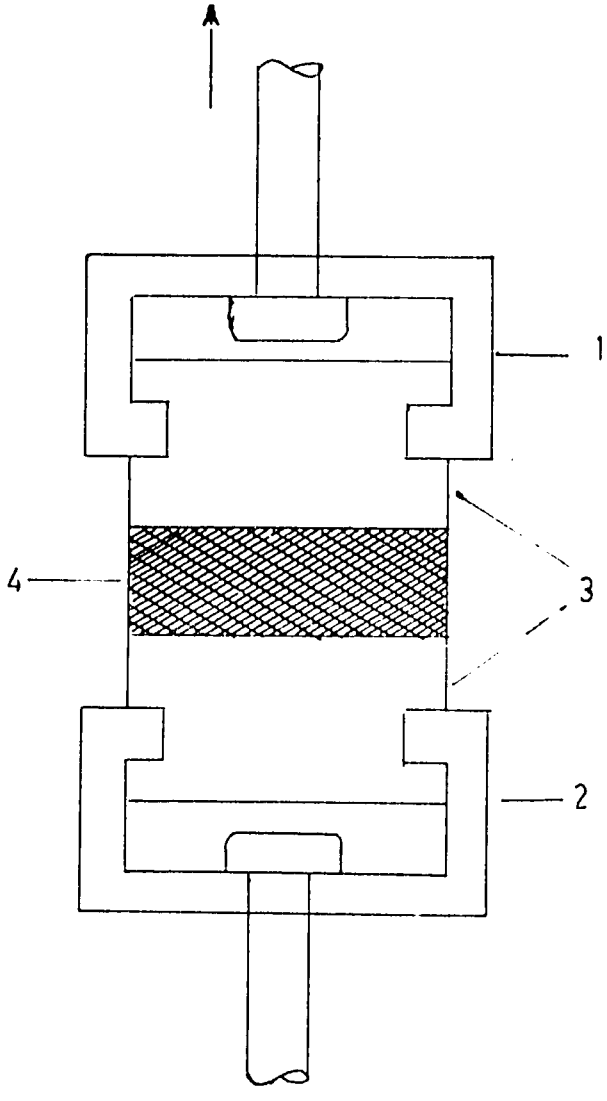

Fig. 15 Test assembly for measuring the Internal Bond-Strength(IBS) 1&2 Test specimen holding jigs. 3. Blocks for bonding test specimen 4. Test specimen.

$$IB_{(S1)} = P / A^2$$

Where $IB_{(S1)}$ = Internal bond strength of specimen S1

P = failing load

A^2 = area of test specimen

If P is measured in kilograms and A in centimeters IB is calculated in kg/cm^2. The other units are Ibs/inch sq. or pascals.

Similarly determine the internal bond strength of other specimens and compute the mean value as under and record it as the internal bond strength of a panel.

$$\text{Internal Bond strength of a panel} = \frac{IB_{(S1)} + IB_{(S2)} + \ldots IB_{(Sn)}}{n}$$

Where $IB_{(S1)}$ = Internal bond strength of specimen S1

$IB_{(S2)}$ = Internal bond strength of specimen S2

$IB_{(Sn)}$ = Internal bond strength of specimen Sn

n = Total number of specimens

Proforma P-16 is used for recording data of IB strength measurements.

5.2.4 Nail Withdrawal Resistance

This property is also called nail holding capacity. It is the measure of resistance offered by the gripping force of particleboard against the force applied to detach a nailed piece of particleboard in a fixture.

For measuring this property take 75 x 150 mm test specimens and mark them as S1, S2..... Sn. Drive a nail of diameter 2.8 mm into the test specimens in a direction at right angles to the face. About 12 mm of the shank portion is projected above the surface of the material. For measuring nail withdrawal resistance, pull out the nail by applying force at right angles to the surface of the test specimen (Fig. 16). Maximum load required to pull out the nail is recorded to the accuracy of one kg. Similarly determine the

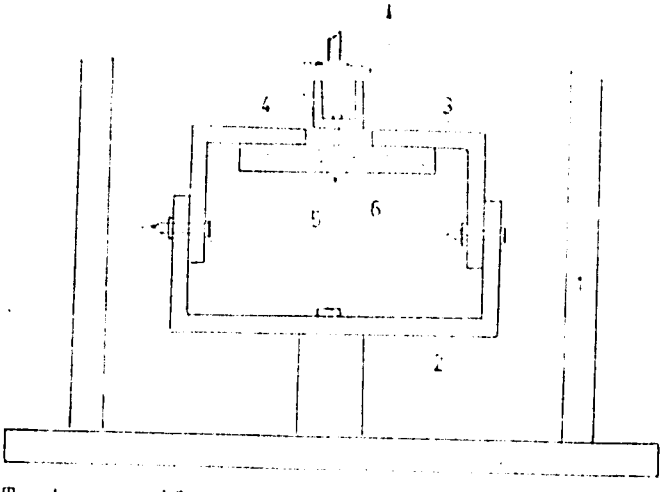

Fig. 16 Test assembly for Nail Withdrawal Resistance (1. machine supports 2&3. test specimen-holding jig 4. nail pulling jig 5. nail 6. test specimen).

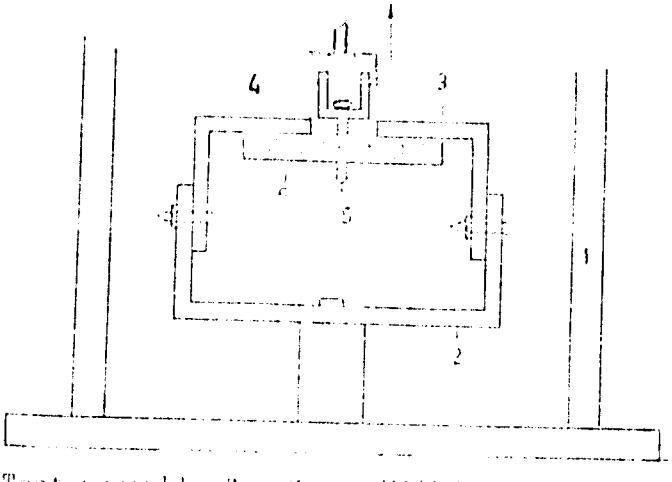

Fig. 17 Test assembly for Screw Withdrawal Resistance (1. machine supports 2&3. test specimen holding jig 4. screw pulling jig 5. screw 6. test-specimen).

nail withdrawal resistance of other specimens and compute the mean value and record it as the nail withdrawal resistance of a panel as under:

$$\text{Nail Withdrawal Resistance of a panel} = \frac{NWR_{(S1)} + NWR_{(S2)} + .. NWR_{(Sn)}}{n}$$

Where $NWR_{(S1)}$ = nail withdrawal resistance of specimen S1

$NWR_{(S2)}$ = nail withdrawal resistance of specimen S2

$NWR_{(Sn)}$ = nail withdrawal resistance of specimen Sn

n = Total number of specimens

Proforma P-17 is used to record data of this experiment.

5.2.5 Screw Withdrawal Resistance

Screw withdrawal resistance is measured in the form of force required to pull out screw from the surface or edge of particleboards.

The measure of this property indicates the resistance offered by the screw gripping force of particleboard against the force applied to detach it. The resistance offered by the surface particles is generally greater than those of edge particles. This difference could be due to variation in the screw gripping force influenced by a large number of factors such as compaction of particles, glue quantity and non-uniformity in formation etc. To study this variation, edge screw withdrawal and face screw withdrawal resistances are measured separately.

5.2.5.1 Face Screw Withdrawal Resistance.

For measuring this property, take test specimens of size 75 x 150 x 25 mm and mark them as S1, S2... Sn. If the thickness of the specimen is lesser than 25 mm, increase its thickness by gluing two or more than two specimens together. Allow the glued specimens to cure for at least 48 hours before test. Condition the specimens at 65 ± 5% RH at 23 ± 2°C.

In the centre of this composite specimen (specimen made by bonding two or more than two specimens together) drill a hole by using 2.8 mm diameter drill bit. Then drive 25 mm wooden screw No. 10 into this hole in a direction at right angles to the surface of the specimen. For measuring the screw

withdrawal resistance, pull out the screw by applying force in a direction at right angles to the surface of the test specimen (Fig. 17). Measure the screw withdrawal force of each specimen in kilograms or pounds, compute the mean value and record it as face screw withdrawal resistance of a panel.

$$\text{Face screw withdrawal resistance of a panel} = \frac{FSWR_{(S1)} + FSWR_{(S2)} + \ldots\ldots FSWR_{(Sn)}}{n}$$

$FSWR_{(S1)}$ = Face screw withdrawal resistance of specimen S1

$FSWR_{(S2)}$ = Face screw withdrawal resistance of specimen S2

$FSWR_{(Sn)}$ = Face screw withdrawal resistance of specimen Sn

n = Total number of specimens

Proforma P-18 is used to record data of this experiment.

5.2.5.2 Edge screw holding resistance.

For measuring this property take specimens of size 75 x 150 x 40 mm. If the thickness is lesser than 40 mm, increase it by gluing two or more than two specimens together. In case of 12 mm thick boards, bond three specimens together and in case of 6 mm thick boards, bond six specimens together. Cure the bonded specimens for at least a week and condition them at 65 ± 5% RH at 23 ±2°C for another one week.

Then drive 25 mm screw No.10, into the hole. For measuring screw withdrawal resistance pull out screw by using test assembly shown in Fig. 17. The screw withdrawal resistance is measured in kilograms or pounds. Edge screw withdrawal resistance is measured on both edges and the average of the two is taken as the screw withdrawal resistance of the specimen.

Similarly measure the screw withdrawal resistance of the other specimens and compute the mean value as under and record it as the edge screw withdrawal resistance of a panel.

$$\text{Edge screw withdrawal resistance of a panel} = \frac{ESW_{(S1)} + ESW_{(S2)} \ldots . ESW_{(Sn)}}{n}$$

Where $ESW_{(S1)}$ = Edge screw withdrawal resistance of specimen S1

$ESW_{(S2)}$ = Edge screw withdrawal resistance of specimen S2

$ESW_{(Sn)}$ = Edge screw withdrawal resistance of specimen Sn.

n = Total number of specimens

Proforma P-19 is used to record the data of this experiment.

6.1.2 NPA 1-75 "Particleboard for Mobile Home Decking".

This standard developed by the National Particleboard Association, describes the properties of particleboard for particular end uses like mobile home decking.

6.1.3 NPA 2-72 "Standard for Particleboard Decking for Factory Built Housing.'

This specification was developed by the National Particleboard Association for grading particleboard for use in factory built-in-houses.

6.1.4 Minimum Property Standards: 1973

This standard was developed under the auspices of Department of Housing and Urban Development and the Federal Housing Administration (FHA) to determine the eligibility of a property as security for an insured loan under the FHA Program.

6.1.5 The Use of Materials Bulletin No. UM-32 "Mat Formed Particleboard for Exterior Use".

This bulletin was established by the West Coast Particleboard Association and supplemented later by the National Particleboard Association.

6.1.6 LLL-B-800 A: 1965 "Federal Specification on Building Board (Wood Particleboard) Hard-Pressed, Vegetable Fiber".

It is a Federal specification and is used by the General Services Administration of the United States Government for use in procuring materials. It describes particularly the packagings for shipment and procedures for inspection.

6.1.7 4270-21-SPEC

This specification was developed by the Department of Defence. It is designated as guide specification for Military Family Housing.

6.2 Canadian Standards

6.2.2 CSA Standard 0188 : 1975

This standard is a revised version of CSA 0188 : 1968. Significant changes have been made in this standard.

6.3 British Standards

6.3.1 British Standard 2604 : 1955 "Medium Density Resin Bonded Chipboard".

This standard specifies requirements for density, strength and other properties of the boards. It also provides efficient testing procedures to ensure that the specified level of quality is maintained.

6.3.2 British Standard 1811 : 1961 " Methods of Test for Wood Chipboards and other particlebaords."

This standard specifies methods of test for boards consisting mainly of particles of wood or other ligno-cellulosic materials bonded with synthetic binder or other organic binder. This standard is the revised version of BS. 1811 : 52 and includes changes in the methods of test. This standard does not mention minimum acceptable values of different properties.

6.3.3 British Standard BS 5669 : 1988

This standard supersedes BS 5669 : 1979 which covered only four board types. This revision includes the following parts issued separately:

BS 5669 Part 1	Methods of sampling, conditioning and test
BS 5669 Part 2	Specifications for wood chipboard
BS 5669 Part 4	Specifications for cement bonded particleboard.
BS 5669 Part 5	Code of practice for the selection and applications of particleboards for specific purposes.

6.4 Pakistani Standards

6.4.1 PS 447 : 1964 "Pakistan Standard specification For Chipboard."

This standard was developed by the Pakistan Standards Institution for assisting the manufacturers to make available a standard quality board to the consumers with its best possible end use properties. This standard does not

concern with actual particleboard being manufactured in the country and used in furniture and building industry.

6.4.2 PS 619 : 1967 "Pakistan Standard Specification for Particleboard (Medium Density).

This Pakistani Standard describes the methods of test and the minimum requirements of different properties of particleboard for use in furniture and construction (Appendix 10).

REFERENCES

1. Talbott, J.W. and T.M. Maloney (1957) Effect of Several Production Variables on Modulus of Rupture and Internal Bond Strength of Board made from Green Douglas-Fir planer shavings. Forest Prod. J., Vol. 7, No. 10.

2. Foster, G. (1967). Species Variation. Proceedings of the Washington State University Particleboard Symposium, No. 1. WSU Washington.

3. Maloney, T.M., J.W. Talbott; and G.G. Marra. (1956). Effect of Species on the Properties of Particleboard Composed of Dry Planer Shavings. Work Order Number 865. WSU Washington.

4. Gatebell, C.J., B.G. Heebink and F.V. Hefty (1966). Influence of Component Variables on Properties of Particleboard for Exterior use. Forest Prod. J., Vol. 16, No. 4.

5. Carroll, M.N. (1963). Whole Wood and Mixed Species as Raw material for Particleboard. Bulletin 274. WSU Washington.

6. Vital, B.R., W.F. Lehmann; and R.S. Boone. (1975). Effects of Species and Board Densities on Properties of Exotic Hardwood particleboards. Background Paper No. 58, Third World Consultation on Wood Based Panels, FAO.

7. Haygreen, J.G., and R.O. [illegible]ejansen. (1972). Influence of the Amount and Type of [illegible] Resin of the Properties of a Wafer-Type Particleboard. [illegible]st Prod. J., Vol. 22, No. 12.

8. Halligan, A.F. (1970). A Review of Thickness Swelling in Particleboard. Wood Science and Technology, Vol. 4.

9. Heebink, C.J. (1972). Irreversible Dimensional Changes in Panel Materials. Forest Prod. J., Vol. 22, No. 5.

10. Lehman, W.F. (1972). Moisture Stability Relationship in Wood-base Composition Boards. Forest Prod.J., Vol. 22, No. 7.

PROFORMAS

(These proformas are used for recording data on different experiments. and methodologies for calculating the values with the help of formulae)

Proforma P-1 Determination of moisture content of wood

Test specimen No.	Weight (gms) Before drying	After drying	Moisture content (MC %)
	W_1	W_2	$(W_1 - W_2) \times 100 / W_2$
Total			
Mean (*)			
Standard deviation (**)			
Co-efficient of variation (***)			

(*) Total/number of samples

(**) can be calculated with scientific calculator

(***) (Standard deviation)100 / Mean

Proforma P-2 Determination of moisture content of particles

Test specimen No.	Wt. before drying			Wt. after drying		Moisture content
	container	container + particles	particles	container + particles	particles	
	(gms)	(gms)	(gms)	(gms)	(gms)	(%)
	a	b	b - a	c	c - a	$\frac{(W_1-W_2)100}{W_2}$
			W_1		W_2	

Total

Mean

Standard deviation

Co-efficient of variation

Proforma P-3. Determination of density of wood with the help of dimensional measurements.

Test specimen No	Length (cm)	Width (cm)	Thickness (cm)	Volume (cm^3)	Weight (gms)	Density (gm/cm^3)	M C %
	(L)	(W)	(T)	(V=LxWxT)	(M)	(M/V)	
Total							
Mean							
Standard deviation							
Co-efficient of variation							

Proforma P-4 Determination of density of wood by water displacement technique (Method-I)

Test specimen No.	Weight of specimen		Volume of specimen	Density of specimen
	In air (gm)	In water (gm)	(cm^3)	(g/cm^3)
	W_1	W_2	$W_1 - W_2$	$W_1 / (W_1 - W_2)$
Total				
Mean				
Standard deviation				
Co-efficient of variation				

Proforma P-5 Determination of density of wood by water displacement technique (Method II)

Test specimen No.	Weight of container + water (gm) W_1	Weight of container + specimen + water (gm) W_2	Volume of specimen (cm^3) $W_2 - W_1$	Density of specimen (g/cm^3) $W_1 / (W_2 - W_1)$

Total

Mean

Standard deviation

Co-efficient of variation

Proforma P-6. Determination of solid content of adhesive

test specimen No.	Weight before drying			Weight after drying		Solid content of adhesive
	container	Container + adhesive	Adhesive	Container + adhesive	Adhesive	
		(gms)	(gms)	(gms)	(gms)	(%)
	a	b	(b - a) W_1	d	(d - a) W_2	$(W_1 - W_2)100/W_1$
Total						
Mean						
Standard deviation						
Co-efficient of variation						

P-7 Solid content of wax emulsion

Test specimen No.	Weight before drying			Weight after drying		Solid content of Wax emulsion
	container (gms) a	container + Wax emulsion (gms) b	Wax emulsion (gms) (b - a) W_1	container + Wax emulsion (gms) c	Wax emulsion (gms) (c - a) W_2	(%) (W_1 - W_2) 100/W_1
Total						
Mean						
Standard deviation						
Co-efficient of variation						

Proforma P-8 Determination of moisture content of particleboard

Test Specimen No.	Weight of test specimen		Weight of moisture	Moisture content
	before drying W_1 (gms)	after drying W_2 (gms)	$W_1 - W_2$ (gms)	$(W_1 - W_2)100 / W_2$ (%)
Total				
Mean				
Standard deviation				
Co-efficient of variation				

Proforma P-9. Density of particleboard

Test Specimen No.	Weight (M)	Length (L)	Width (W)	Thickness (T)	Volume (V)=LxWxT	Density M/V
	gm	cm	cm	cm	cm^3	g/cm^3
Total						
Mean						
Standard deviation						
Co-efficient of variation						

P-10 Determination of water absorption by a particleboard panel

Test Specimen No.	Weight of specimen		Weight of water	Water absorption as percent of W1
	after water absorption W_1 (gms)	before water absorption W_2 (gms)	$W_1 - W_2$ (gms)	$(W_2 - W_1)100 / W_1$ (%)

Total

Mean

Standard deviation

Co-efficient of variation

Proforma P-11 Thickness swelling of particleboard caused by water soaking

Test specimen No.	Points of measure-ments	Thickness measurements (mm)			Thickness swelling (%)	
		Before water soaking	after 2 hours water soaking	after 24 hours water soaking	after 2 hours water soaking	after 24 hours water soaking
		a	b	c	$\frac{(b - a)100}{a}$	$\frac{(c - a)100}{a}$
Total						
Mean						
Standard deviation						
Co-efficient of variation						

Proforma P-12 Linea expansion of particleboard panel in humid atmosphere

Test speci men No.	lines of measure-ments	Length measurements (mm)		Increase in length	Linear expan-sion (LE)
		after condi-tioning at 30% RH	after condi-tioning at 90% RH		
		a (mm)	b (mm)	b - a (mm)	(b - a) 100 / a (%)
Total					
Mean					
Standard deviation					
Co-efficient of variation					

Proforma P-13 Thickness swelling of particleboard panel in humid atmosphere

Test specimen No.	Points of measurements	Thickness measurements (mm)		Increase in thickness	Thickness swelling (TS)
		after conditioning at 30% RH a (mm)	after conditioning at 90% RH b (mm)	b - a (mm)	(b - a)100 / a (%)
Total					
Mean					
Standard deviation					
Co-efficient of variation					

Proforma P-14 Modulus of rupture (MOR) of particleboard

Test Specimen No.	Width b (cm)	Thickness d (cm)	Failing load P (kg)	1.5 PL	d^2	MOR $1.5PL / bd^2$ (kg/cm^2)
Total				L = Length of Span		
Mean						
Standard deviation						
Co-efficient of variation						

Proforma P-15. Modulus of elasticity (MOE) of particleboard

Test specimen No.	Load at proportional limit (P_1) kg	Deflection at proportional limit (y1) cm	MOE $P_1L^3/4bd^3y1$ (kg/cm^2)
Total		Take P_1 and y1 from the graph	
Mean		Take L b d from MOR proforma	
Standard deviation			
Co-efficient of variation			

Proforma P-16. Internal Bond Strength (IBS) OR Tensile strength perpendicular to the surface.

Test specimen No.	Measurements of specimen			Failing load	IB Strength
	Length l	Width b	Area A^2	P	P/A^2
	(cm)	(cm)	(cm^2)	(kg)	kg/cm^2
Total					
Mean					
Standard Deviation					
Co-efficient of variation					

Proforma P-17 Nail withdrawal resistance (NWR) of particleboard.

Test specimen No.	NWR (kg)	Test specimen No.	NWR (kg)

Total

Mean

Standard deviation

Co-efficient of variation

Proforma P-18 Face screw withdrawal resistance (FSWR) of particleboard

Test specimen No.	FSWR (kg)	Test specimen No.	FSWR (kg)

Total

Mean

Standard deviation

Co-efficient of variation

Proforma P-19 Edge screw withdrawal resistance (ESWR) of particleboard

Test specimen No.	ESWR (kg)	Test specimen No.	ESWR (kg)

Total

Mean

Standard deviation

Co-efficient of variation

APPENDICES

(Appendices 1 - 8 describe the quantity of board components in commercial size boards of size 4 x 8 ft (2.438 x 1.219 meters) and thicknesses 0.5 in.(0.013 meters) and 0.75 in.(0.019 meters)

APPENDIX 1

ıantity of oven dry particles, adhesive (7%), wax (1%) in a particleboard ınels (size 2.438 x 1.219 x 0.013 meters) of density 400 to 1000 kg/m3

›ARD :NSITY :SIRED kg/m3)	BOARD MASS (kg)	MOISTURE IN BOARD @10% OF BOARD MASS (kg)	OVEN DRY PARTICLES +ADHESIVE +WAX (kg)	OVEN DRY PARTICLES (kg)	OVEN DRY ADHESIVE (@ 7%) (kg)	OVEN DRY WAX (@ 1%) (kg)
(D)	M=DxV	m=Mx0.1	PAW=M-m	P=PAWx 100/108	A=0.07xP	E=0.01xP
400	15.454	1.545	13.909	12.878	0.901	0.129
420	16.227	1.623	14.604	13.522	0.947	0.135
440	16.999	1.700	15.299	14.166	0.992	0.142
460	17.772	1.777	15.995	14.810	1.037	0.148
480	18.545	1.854	16.690	15.454	1.082	0.155
500	19.317	1.932	17.386	16.098	1.127	0.161
520	20.090	2.009	18.081	16.742	1.172	0.167
540	20.863	2.086	18.777	17.386	1.217	0.174
560	21.636	2.164	19.472	18.030	1.262	0.180
580	22.408	2.241	20.167	18.674	1.307	0.187
600	23.181	2.318	20.863	19.317	1.352	0.193
620	23.954	2.395	21.558	19.961	1.397	0.200
640	24.726	2.473	22.254	20.605	1.442	0.206
660	25.499	2.550	22.949	21.249	1.487	0.212
680	26.272	2.627	23.645	21.893	1.533	0.219
700	27.044	2.704	24.340	22.537	1.578	0.225
720	27.817	2.782	25.035	23.181	1.623	0.232
740	28.590	2.859	25.731	23.825	1.668	0.238
760	29.363	2.936	26.426	24.469	1.713	0.245
780	30.135	3.014	27.122	25.113	1.758	0.251
800	30.908	3.091	27.817	25.757	1.803	0.258
820	31.681	3.168	28.513	26.401	1.848	0.264
840	32.453	3.245	29.208	27.044	1.893	0.270
860	33.226	3.323	29.903	27.688	1.938	0.277
880	33.999	3.400	30.599	28.332	1.983	0.283
900	34.771	3.477	31.294	28.976	2.028	0.290
920	35.544	3.554	31.990	29.620	2.073	0.296
940	36.317	3.632	32.685	30.264	2.118	0.303
960	37.090	3.709	33.381	30.908	2.164	0.309
980	37.862	3.786	34.076	31.552	2.209	0.316
1000	38.635	3.863	34.771	32.196	2.254	0.322

APPENDIX 2

ıantity of oven dry particles, adhesive (8%), wax (1%) in a particleboard ınels (size 1.438 x 1.219 x 0.013 meters) of density 400 to 1000 kg/m3

›ARD :NSITY :SIRED kg/m3)	BOARD MASS (kg)	MOISTURE IN BOARD @10% OF BOARD MASS (kg)	OVEN DRY PARTICLES +ADHESIVE +WAX (kg)	OVEN DRY PARTICLES (kg)	OVEN DRY ADHESIVE (@ 8%) (kg)	OVEN DRY WAX (@ 1%) (kg)
(D)	M=DxV	m=Mx0.1	PAW=M-m	P=PAWx 100/109	A=0.08xP	E=0.01xP
400	15.454	1.545	13.909	12.760	1.021	0.128
420	16.227	1.623	14.604	13.398	1.072	0.134
440	16.999	1.700	15.299	14.036	1.123	0.140
460	17.772	1.777	15.995	14.674	1.174	0.147
480	18.545	1.854	16.690	15.312	1.225	0.153
500	19.317	1.932	17.386	15.950	1.276	0.160
520	20.090	2.009	18.081	16.588	1.327	0.166
540	20.863	2.086	18.777	17.226	1.378	0.172
560	21.636	2.164	19.472	17.864	1.429	0.179
580	22.408	2.241	20.167	18.502	1.480	0.185
600	23.181	2.318	20.863	19.140	1.531	0.191
620	23.954	2.395	21.558	19.778	1.582	0.198
640	24.726	2.473	22.254	20.416	1.633	0.204
660	25.499	2.550	22.949	21.054	1.684	0.211
680	26.272	2.627	23.645	21.692	1.735	0.217
700	27.044	2.704	24.340	22.330	1.786	0.223
720	27.817	2.782	25.035	22.968	1.837	0.230
740	28.590	2.859	25.731	23.606	1.889	0.236
760	29.363	2.936	26.426	24.244	1.940	0.242
780	30.135	3.014	27.122	24.882	1.991	0.249
800	30.908	3.091	27.817	25.520	2.042	0.255
820	31.681	3.168	28.513	26.158	2.093	0.262
840	32.453	3.245	29.208	26.796	2.144	0.268
860	33.226	3.323	29.903	27.434	2.195	0.274
880	33.999	3.400	30.599	28.072	2.246	0.281
900	34.771	3.477	31.294	28.710	2.297	0.287
920	35.544	3.554	31.990	29.348	2.348	0.293
940	36.317	3.632	32.685	29.986	2.399	0.300
960	37.090	3.709	33.381	30.624	2.450	0.306
980	37.862	3.786	34.076	31.262	2.501	0.313
1000	38.635	3.863	34.771	31.900	2.552	0.319

APPENDIX 3

uantity of oven dry particles, adhesive (9%), wax (1%) in a particleboard anels (size 2.438 x 1.219 x 0.013 meters) of density 400 to 1000 kg/m3

OARD ENSITY ESIRED	BOARD MASS	MOISTURE IN BOARD @10% OF BOARD MASS	OVEN DRY PARTICLES +ADHESIVE +WAX	OVEN DRY PARTICLES	OVEN DRY ADHESIVE (@ 9%)	OVEN DRY WAX (@ 1%)
(kg/m3)	(kg)	(kg)	(kg)	(kg)	(kg)	(kg)
(D)	M=DxV	m=Mx0.1	PAW=M-m	P=PAWx 100/110	A=0.09xP	E=0.01xP
400	15.454	1.545	13.909	12.644	1.138	0.126
420	16.227	1.623	14.604	13.276	1.195	0.133
440	16.999	1.700	15.299	13.909	1.252	0.139
460	17.772	1.777	15.995	14.541	1.309	0.145
480	18.545	1.854	16.690	15.173	1.366	0.152
500	19.317	1.932	17.386	15.805	1.422	0.158
520	20.090	2.009	18.081	16.437	1.479	0.164
540	20.863	2.086	18.777	17.070	1.536	0.171
560	21.636	2.164	19.472	17.702	1.593	0.177
580	22.408	2.241	20.167	18.334	1.650	0.183
600	23.181	2.318	20.863	18.966	1.707	0.190
620	23.954	2.395	21.558	19.598	1.764	0.196
640	24.726	2.472	22.254	20.231	1.821	0.202
660	25.499	2.550	22.949	20.863	1.878	0.209
680	26.272	2.627	23.645	21.495	1.935	0.215
700	27.044	2.704	24.340	22.127	1.991	0.221
720	27.817	2.782	25.035	22.759	2.048	0.228
740	28.590	2.859	25.731	23.392	2.105	0.234
760	29.363	2.936	26.426	24.024	2.162	0.240
780	30.135	3.014	27.122	24.656	2.219	0.247
800	30.908	3.091	27.817	25.288	2.276	0.253
820	31.681	3.168	28.513	25.921	2.333	0.259
840	32.453	3.245	29.208	26.553	2.390	0.266
860	33.226	3.323	29.903	27.185	2.447	0.272
880	33.999	3.400	30.599	27.817	2.504	0.278
900	34.771	3.477	31.294	28.449	2.560	0.284
920	35.544	3.554	31.990	29.082	2.617	0.291
940	36.317	3.632	32.685	29.714	2.674	0.297
960	37.090	3.709	33.381	30.346	2.731	0.303
980	37.862	3.786	34.076	30.978	2.788	0.310
1000	38.635	3.863	34.771	31.610	2.845	0.316

APPENDIX 4

uantity of oven dry particles, adhesive (10%), wax (1%) in a particleboar anels (size 2.438 x 1.219 x 0.013 meters) of density 400 to 1000 kg/m3

OARD ENSITY ESIRED (kg/m3)	BOARD MASS (kg)	MOISTURE IN BOARD @10% OF BOARD MASS (kg)	OVEN DRY PARTICLES +ADHESIVE +WAX (kg)	OVEN DRY PARTICLES (kg)	OVEN DRY ADHESIVE (@ 10%) (kg)	OVEN DRY WAX (@ 1%) (kg)
(D)	M=DxV	m=Mx0.1	PAW M-m	P=PAW x 100/111	A=0.10xP	E=0.01xP
400	15.454	1.545	13.909	12.530	1.253	0.125
420	16.227	1.623	14.604	13.157	1.316	0.132
440	16.999	1.700	15.299	13.783	1.378	0.138
460	17.772	1.777	15.995	14.410	1.441	0.144
480	18.545	1.854	16.690	15.036	1.504	0.150
500	19.317	1.932	17.386	15.663	1.566	0.157
520	20.090	2.009	18.081	16.289	1.629	0.163
540	20.863	2.086	18.777	16.916	1.692	0.169
560	21.636	2.164	19.472	17.542	1.754	0.175
580	22.408	2.241	20.167	18.169	1.817	0.182
600	23.181	2.318	20.863	18.795	1.880	0.188
620	23.954	2.395	21.558	19.422	1.942	0.194
640	24.726	2.473	22.254	20.048	2.005	0.200
660	25.499	2.550	22.949	20.675	2.067	0.207
680	26.272	2.627	23.645	21.301	2.130	0.213
700	27.044	2.704	24.340	21.928	2.193	0.219
720	27.817	2.782	25.035	22.554	2.255	0.226
740	28.590	2.859	25.731	23.181	2.318	0.232
760	29.363	2.936	26.426	23.807	2.381	0.238
780	30.135	3.014	27.122	24.434	2.443	0.244
800	30.908	3.091	27.817	25.060	2.506	0.251
820	31.681	3.168	28.513	25.687	2.569	0.257
840	32.453	3.245	29.208	26.313	2.631	0.263
860	33.226	3.323	29.903	26.940	2.694	0.269
880	33.999	3.400	30.599	27.567	2.757	0.276
900	34.771	3.477	31.294	28.193	2.819	0.282
920	35.544	3.554	31.990	28.820	2.882	0.288
940	36.317	3.632	32.685	29.446	2.945	0.294
960	37.090	3.709	33.381	30.073	3.007	0.301
980	37.862	3.786	34.076	30.699	3.070	0.307
1000	38.635	3.863	34.771	31.326	3.133	0.313

APPENDIX 5

uantity of oven dry particles, adhesive (7%), wax (1%) in a particleboard anels (size 2.438 x 1.219 x 0.019 meters) of density 400 to 1000 kg/m3

OARD ENSITY ESIRED (kg/m3)	BOARD MASS (kg)	MOISTURE IN BOARD @10% OF BOARD MASS (kg)	OVEN DRY PARTICLES +ADHESIVE +WAX (kg)	OVEN DRY PARTICLES (kg)	OVEN DRY ADHESIVE (@ 7%) (kg)	OVEN LRY WAX (@ 1%) (kg)
(D)	M=DxV	m=Mx0.1	PAW=M-m	P=PAWx 100/108	A=0.07xP	E=0.01xP
400	22.587	2.259	20.328	18.822	1.318	0.188
420	23.716	2.372	21.344	19.763	1.383	0.198
440	24.845	2.485	22.361	20.704	1.449	0.207
460	25.975	2.597	23.377	21.645	1.515	0.216
480	27.104	2.710	24.394	22.587	1.581	0.226
500	28.233	2.823	25.410	23.528	1.647	0.235
520	29.363	2.936	26.426	24.469	1.713	0.245
540	30.492	3.049	27.443	25.410	1.779	0.254
560	31.621	3.162	28.459	26.351	1.845	0.264
580	32.751	3.275	29.476	27.292	1.910	0.273
600	33.880	3.388	30.492	28.233	1.976	0.282
620	35.009	3.501	31.508	29.174	2.042	0.292
640	36.139	3.614	32.525	30.115	2.108	0.301
660	37.268	3.727	33.541	31.057	2.174	0.311
680	38.397	3.840	34.557	31.998	2.240	0.320
700	39.527	3.953	35.574	32.939	2.306	0.329
720	40.656	4.066	36.590	33.880	2.372	0.339
740	41.785	4.179	37.607	34.821	2.437	0.348
760	42.915	4.291	38.623	35.762	2.503	0.358
780	44.044	4.404	39.639	36.703	2.569	0.367
800	45.173	4.517	40.656	37.644	2.635	0.376
820	46.303	4.630	41.672	38.585	2.701	0.386
840	47.432	4.743	42.689	39.527	2.767	0.395
860	48.561	4.856	43.705	40.468	2.833	0.405
880	49.691	4.969	44.721	41.409	2.899	0.414
900	50.820	5.082	45.738	42.350	2.964	0.423
920	51.949	5.195	46.754	43.291	3.030	0.433
940	53.079	5.308	47.771	44.232	3.096	0.442
960	54.208	5.421	48.787	45.173	3.162	0.452
980	55.337	5.534	49.803	46.114	3.228	0.461
1000	56.466	5.647	50.820	47.055	3.294	0.471

APPENDIX 6

uantity of oven dry particles, adhesive (8%), wax (1%) in a particleboard anels (size 2.438 x 1.219 x 0.019 meters) of density 400 to 1000 kg/m3

OARD ENSITY ESIRED (kg/m3)	BOARD MASS (kg)	MOISTURE IN BOARD @10% OF BOARD MASS (kg)	OVEN DRY PARTICLES +ADHESIVE +WAX (kg)	OVEN DRY PARTICLES (kg)	OVEN DRY ADHESIVE (@ 8%) (kg)	OVEN DRY WAX (@ 1%) (kg)
(D)	M=DxV	m=Mx0.1	PAW=M-m	P=PAWx 100/109	A=0.08xP	E=0.01xP
400	22.587	2.259	20.328	18.649	1.492	0.186
420	23.716	2.372	21.344	19.582	1.567	0.196
440	24.845	2.485	22.361	20.514	1.641	0.205
460	25.975	2.597	23.377	21.447	1.716	0.214
480	27.104	2.710	24.394	22.379	1.790	0.224
500	28.233	2.823	25.410	23.312	1.865	0.233
520	29.363	2.936	26.426	24.244	1.940	0.242
540	30.492	3.049	27.443	25.177	2.014	0.252
560	31.621	3.162	28.459	26.109	2.089	0.261
580	32.751	3.275	29.476	27.042	2.163	0.270
600	33.880	3.388	30.492	27.974	2.238	0.280
620	35.009	3.501	31.508	28.907	2.313	0.289
640	36.139	3.614	32.525	29.839	2.387	0.298
660	37.268	3.727	33.541	30.772	2.462	0.308
680	38.397	3.840	34.557	31.704	2.536	0.317
700	39.527	3.953	35.574	32.637	2.611	0.326
720	40.656	4.066	36.590	33.569	2.686	0.336
740	41.785	4.179	37.607	34.502	2.760	0.345
760	42.915	4.291	38.623	35.434	2.835	0.354
780	44.044	4.404	39.639	36.366	2.909	0.364
800	45.173	4.517	40.656	37.299	2.984	0.373
820	46.303	4.630	41.672	38.231	3.059	0.382
840	47.432	4.743	42.689	39.164	3.133	0.392
860	48.561	4.856	43.705	40.096	3.208	0.401
880	49.691	4.969	44.721	41.029	3.282	0.410
900	50.820	5.082	45.738	41.961	3.357	0.420
920	51.949	5.195	46.754	42.894	3.432	0.429
940	53.079	5.308	47.771	43.826	3.506	0.438
960	54.208	5.421	48.787	44.759	3.581	0.448
980	55.337	5.534	49.803	45.691	3.655	0.457
1000	56.466	5.647	50.820	46.624	3.730	0.466

APPENDIX 7

ıantity of oven dry particles, adhesive (9%), wax (1%) in a particleboard ınels (size 2.438 x 1.219 x 0.019 meters) of density 400 to 1000 kg/m3

)ARD :NSITY :SIRED (kg/m3)	BOARD MASS (kg)	MOISTURE IN BOARD @10% OF BOARD MASS (kg)	OVEN DRY PARTICLES +ADHESIVE +WAX (kg)	OVEN DRY PARTICLES (kg)	OVEN DRY ADHESIVE (@ 9%) (kg)	OVEN DRY WAX (@ 1%) (kg)
(D)	M=DxV	m=Mx0.1	PAW=M-m	P=PAWx 100/110	A=0.09xP	E=0.01xP
400	22.587	2.259	20.328	18.480	1.663	0.185
420	23.716	2.372	21.344	19.404	1.746	0.194
440	24.845	2.485	22.361	20.328	1.830	0.203
460	25.975	2.597	23.377	21.252	1.913	0.213
480	27.104	2.710	24.394	22.176	1.996	0.222
500	28.233	2.823	25.410	23.100	2.079	0.231
520	29.363	2.936	26.426	24.024	2.162	0.240
540	30.492	3.049	27.443	24.948	2.245	0.249
560	31.621	3.162	28.459	25.872	2.328	0.259
580	32.751	3.275	29.476	26.796	2.412	0.268
600	33.880	3.388	30.492	27.720	2.495	0.277
620	35.009	3.501	31.508	28.644	2.578	0.286
640	36.139	3.614	32.525	29.568	2.661	0.296
660	37.268	3.727	33.541	30.492	2.744	0.305
680	38.397	3.840	34.557	31.416	2.827	0.314
700	39.527	3.953	35.574	32.340	2.911	0.323
720	40.656	4.066	36.590	33.264	2.994	0.333
740	41.785	4.179	37.607	34.188	3.077	0.342
760	42.915	4.291	38.623	35.112	3.160	0.351
780	44.044	4.404	39.639	36.036	3.243	0.360
800	45.173	4.517	40.656	36.960	3.326	0.370
820	46.303	4.630	41.672	37.884	3.410	0.379
840	47.432	4.743	42.689	38.808	3.493	0.388
860	48.561	4.856	43.705	39.732	3.576	0.397
880	49.691	4.969	44.721	40.656	3.659	0.407
900	50.820	5.082	45.738	41.580	3.742	0.416
920	51.949	5.195	46.754	42.504	3.825	0.425
940	53.079	5.308	47.771	43.428	3.909	0.434
960	54.208	5.421	48.787	44.352	3.992	0.444
980	55.337	5.534	49.803	45.276	4.075	0.453
1000	56.466	5.647	50.820	46.200	4.158	0.462

APPENDIX 8

ıantity of oven dry particles, adhesive (10%), wax (1%) in a particleboar
ınels (size 2.438 x 1.219 x 0.019 meters) of density 400 to 1000 kg/m3

)ARD :NSITY :SIRED kg/m3)	BOARD MASS (kg)	MOISTURE IN BOARD @10% OF BOARD MASS (kg)	OVEN DRY PARTICLES +ADHESIVE +WAX (kg)	OVEN DRY PARTICLES (kg)	OVEN DRY ADHESIVE (@ 10%) (kg)	OVEN DRY WAX (@ 1%) (kg)
(D)	M=DxV	m=Mx0.1	PAW=M-m	P=PAWx 100/111	A=0.1xP	E=0.01xP
400	22.587	2.259	20.328	18.313	1.831	0.183
420	23.716	2.372	21.344	19.229	1.923	0.192
440	24.845	2.485	22.361	20.145	2.014	0.201
460	25.975	2.597	23.377	21.060	2.106	0.211
480	27.104	2.710	24.394	21.976	2.198	0.220
500	28.233	2.823	25.410	22.892	2.289	0.229
520	29.363	2.936	26.426	23.807	2.381	0.238
540	30.492	3.049	27.443	24.723	2.472	0.247
560	31.621	3.162	28.459	25.639	2.564	0.256
580	32.751	3.275	29.476	26.555	2.655	0.266
600	33.880	3.388	30.492	27.470	2.747	0.275
620	35.009	3.501	31.508	28.386	2.839	0.284
640	36.139	3.614	32.525	29.302	2.930	0.293
660	37.268	3.727	33.541	30.217	3.022	0.302
680	38.397	3.840	34.557	31.133	3.113	0.311
700	39.527	3.953	35.574	32.049	3.205	0.320
720	40.656	4.066	36.590	32.964	3.296	0.330
740	41.785	4.179	37.607	33.880	3.388	0.339
760	42.915	4.291	38.623	34.796	3.480	0.348
780	44.044	4.404	39.639	35.711	3.571	0.357
800	45.173	4.517	40.656	36.627	3.663	0.366
820	46.303	4.630	41.672	37.543	3.754	0.375
840	47.432	4.743	42.689	38.458	3.846	0.385
860	48.561	4.856	43.705	39.374	3.937	0.394
880	49.691	4.969	44.721	40.290	4.029	0.403
900	50.820	5.082	45.738	41.205	4.121	0.412
920	51.949	5.195	46.754	42.121	4.212	0.421
940	53.079	5.308	47.771	43.037	4.304	0.430
960	54.208	5.421	48.787	43.952	4.395	0.440
980	55.337	5.534	49.803	44.868	4.487	0.449
1000	56.466	5.647	50.820	45.784	4.578	0.458

APPENDIX 9

Standard Requirements of Commercial Standard CS 236-66 for Particleboard

Density(grade)	Class*	Modulus of Rupture	Modulus of Elasticity	Internal bond	Linear expansion	Screw holding edge	Screw holding face
		kg/cm2	kg/cm2	kg/cm2	%	kg	kg
Type(use 1) Mat-formed particleboard (generally made with urea-formaldehyde-resin binders) suitable for interior applications							
A. High density 800 kg/m3 and over	1	168.7	24607	14.06	0.55	204.5	-
	2	239.0	24607	9.84	0.55	-	
B. Medium density 590 - 800 kg/m3	1	112.5	17577	4.92	0.35	102.3	72.7
	2	168.7	28123	4.22	0.30	102.3	90.9
C. Low density 590 kg/m3 and under	1	56.2	10546	1.41	0.30	56.8	-
	2	98.4	17577	2.11	0.30	79.5	-
Type(use 2) Mat-formed particleboard made with durable and highly moisture-and heat resistant binders (generally phenolic resins) suitable for interior and certain exterior applications.							
A. High density 800 kg/m3 and over	1	168.7	24607	8.79	0.55	204.5	-
	2	239.0	35153	28.12	0.55	227.3	159
B. Medium density 590 - 800 kg/m3	1	126.5	17577	4.57	0.35	102.3	72.7
	2	175.7	31638	4.22	0.25	113.6	90.9

* Strength classification bar for properties of panels currently produced.

APPENDIX 10

Standard Requirements of Pakistan Standard PS 619: 1967 for Medium Density Particleboard&

Property	Limiting Value	
	British Units	Metric Units
Density	29 lbs/ft^3	465 kg/m^3
Modulus of Rupture	1400 lbs/in^2	98 kg/cm^2
Tensile Strength perpendicular to surface	40 lbs/in^2	2.8 kg/cm^2
Water Absorption	30 %	30 %
Thickness Swelling	20 %	20 %