59

ENVIRONMENTAL AND SOCIAL SOUNDNESS ASSESSMENT
GUDDU POWER PLANT EXPANSION PROJECT

PAKISTAN WATER AND POWER DEVELOPMENT AUTHORITY

SPONSORED BY:

OFFICE OF ENERGY AND ENVIRONMENT
U.S. AGENCY FOR INTERNATIONAL DEVELOPMENT

MISSION TO PAKISTAN

PREPARED BY:

KBN ENGINEERING AND APPLIED SCIENCES, INC.

AUGUST 1988

ENVIRONMENTAL AND SOCIAL SOUNDNESS ASSESSMENT
GUDDU POWER PLANT EXPANSION PROJECT

Pakistan Water and Power Development Authority

Prepared by:

KBN Engineering and Applied Sciences, Inc.

August 1988

LIST OF PREPARERS

Listed below are the persons who directly participated in the preparation of this Environmental Assessment for the Guddu Power Generation Project.

M. Glenn Rutanen-Whaley, M.S.	USAID--Washington, Environmental Coordinator, Bureau for Asia and Near East
John Morgan	USAID--Islamabad, Mission Environmental Officer
Kennard F. Kosky, M.S., P.E.	KBN Engineering and Applied Sciences, Inc., Project Manager
James R. Newman, Ph.D.	KBN Engineering and Applied Sciences, Inc., Assistant Project Manager and Ecology
David A. Buff, M.S., P.E.	KBN Engineering and Applied Sciences, Inc.
Robert C. McCann, B.S.	KBN Engineering and Applied Sciences, Inc.
Frederick Ramsey, M.S., P.E.	KBN Engineering and Applied Sciences, Inc.
Herbert Platt, Ph.D.	KBN Engineering and Applied Sciences, Inc., Socioeconomics
Lisa G. Spinella, B.S.	KBN Engineering and Applied Sciences, Inc., Document Production
Sebastian M. Marano	Gibbs and Hill, Inc., Home Office Project Manager
Norman W. Hinsey	Gibbs and Hill, Inc., Senior Engineer

ACKNOWLEDGMENTS

During the preparation of this environmental and social soundness provided by certain individuals by supplying critically needed information and/or by reviewing portions of this assessment. These efforts are greatly appreciated and contributed to the technical soundness of this document.

Mr. M. Sadid Niazi, Zoologist
Pakistan Zoological Survey
Department
Karachi, Pakistan

Dr. S.A. Khan
Agricultural Extension
Wildlife and Forestry Dept.
Government of Sind
Karachi, Pakistan

Assistant Meteorologist
Regional Meteorological Center
Karachi Airport
Karachi, Pakistan

Dr. Abdul Ghaffar
Chairman
University of Karachi
Karachi, Pakistan

Najib Murtazo
Office of Energy and Environment
USAID - Pakistan
Islamabad, Pakistan

Farrukh Mahmood
Office of Energy and Environment
USAID - Pakistan
Islamabad, Pakistan
L.J. Munder
Gibbs & Hill, Inc.
Guddu, Pakistan

Abdul Kharl
Conservator of Forest
Wildlife & Forestry Dept.
Government of Sind
Sukkur, Pakistan

Norman Hinsey
Gibbs & Hill, Inc.
New York, New York

Mr. M.F. Ahmed, Director
Pakistan Zoological Survey
Department
Karachi, Pakistan

Khan Mohammad Khan
Deputy Conservator of Forests
Sind University

Library Staff
Sind Wildlife Management Board
Government of Sind
Karachi, Pakistan

Dr. Soaliha Ahmed
Department of Botany
University of Karachi
Karachi, Pakistan

Dr. Waldemar Albertin
Office of Energy and Environment
USAID - Pakistan
Islamabad, Pakistan

Stafford D.I. Reimers
Gibbs & Hill, Inc.
Guddu, Pakistan

Peter Biro
Gibbs & Hill, Inc.
Guddu, Pakistan

Dr. Muhammod Hanil
PCSIR Laboratories
Ministry of Science & Technology
Government of Pakistan
Lahore, Pakistan

A.G. Pirzada
Agriculture Center
Sind Regional Plan Organization
Karachi, Pakistan

Dr. Kazi, M.D.
Director
Wapda/Guddu Hospital

Najib Murtaza
Environmental Engineer
USAID
Energy & Environment
Isalamabad, Pakistan

M. Waseem Choudhry
Program Manager
Power Generation Program
Islamabad, Pakistan

S. Hakim Ali Shah Bokhari
Pakistan Department of
Archaeology

Niaz Rasool, Director
Southern Circle
Pakistan Department of
Archaeology and
Museums

Mr. Khurshid Hasan
Acting Director General
Pakistan Department of Archaeology
and Museums

Mr. Mohammad Yahza Wali-ullah
Director
Bureau of Statistics
Government of Sind
Karachi, Pakistan

Atta Bhatti
USAID
Energy & Environment
Islamabad, Pakistan

Hameed Ahmad
Secretary to Government of Sind
Wildlife and Forest Department

T.A. Ansari
Chief Conservator of Forests

Syed Rafi Ahmed
Assistant Meteorologist
Regional Meteorological Center
Karachi Airport
Pakistan Meteorological Department

Dr. Walter Auffenberg
Florida State University
University of Florida
Gainesville, Florida 32611 USA

TABLE OF CONTENTS

Section		Page
List of Preparers		i
Acknowledgements		ii
1.0	INTRODUCTION	1-1
	1.1 ENVIRONMENTAL ASSESSMENT PURPOSE AND SCOPE	1-1
	1.2 OBJECTIVES OF THE PROJECT AND GOVERNMENT OF PAKISTAN	1-2
	1.3 OVERVIEW OF PROJECT AND STUDY AREA	1-3
	1.4 ENVIRONMENTAL POLICY, REGULATIONS AND PERMIT REQUIREMENTS	1-5
	1.4.1 Government of Pakistan	1-5
	1.4.2 Donor Organization	1-5
2.0	DESCRIPTION OF PROJECT ALTERNATIVES	2-1
	2.1 MANAGEMENT ALTERNATIVES	2-1
	2.1.1 No-Action Alternative	2-1
	2.1.2 Purchases of Required Energy From Other Sources/Joint Projects	2-1
	2.1.3 Postponing Unit Requirements, Reactivating and/or Upgrading Existing Plants	2-1
	2.2 ALTERNATIVE PROJECTS	2-2
	2.3 ALTERNATIVE FUELS	2-2
	2.4 ALTERNATIVE DESIGNS	2-4
	2.4.1 Power Block	2-4
	2.4.2 Water Supply and Treatment	2-4
	2.4.3 Wastewater Treatment and Disposal	2-8
	2.4.4 Solid Waste Disposal	2-11
	2.4.5 Air Emission Controls	2-11
	2.5 INFRASTRUCTURE ACTIVITIES	2-12
	2.6 EMPLOYMENT ALTERNATIVES	2-13
3.0	DESCRIPTION OF THE AFFECTED ENVIRONMENT	3-1
	3.1 PHYSICAL ENVIRONMENT	3-1

TABLE OF CONTENTS
(Continued)

Section		Page
3.1.1	Air Resources	3-1
	3.1.1.1 Climatology	3-1
	3.1.1.2 Site Meteorology	3-3
	3.1.1.3 Existing Air Pollution Sources	3-6
	3.1.1.4 Ambient Air Quality	3-13
	3.1.1.5 Noise Resources	3-20
3.1.2	Land and Water Resources	3-30
	3.1.2.1 Surface Water Resources	3-30
	3.1.2.2 Geology Physiography, Topography and Seismicity	3-51
	3.1.2.3 Groundwater Resources	3-51
3.2	ECOLOGICAL ENVIRONMENT	3-52
3.2.1	Existing Communities	3-52
	3.2.1.1 Plant Site	3-52
	3.2.1.2 Indus River	3-52
3.2.2	Endangered Species	3-56
3.3	SOCIAL, CULTURAL AND INSTITUTIONAL ENVIRONMENT	3-58
3.3.1	Socioeconomic Characteristics	3-58
	3.3.1.1 Plant Site and Area	3-58
	3.3.1.2 Demography	3-59
	3.3.1.3 Employment and Economy	3-62
	3.3.1.4 Transportation	3-63
	3.3.1.5 Facilities and Services	3-65
3.3.2	Land Use	3-69
	3.3.2.1 Agriculture	3-69
	3.3.2.2 Livestock Domestication/Herding	3-71
	3.3.2.3 Fishing	3-71
	3.3.2.4 Wildlife and Natural Vegetation Habitats	3-73
	3.3.2.5 Forest Reserve	3-73
3.3.3	Cultural Resources	3-73
	3.3.3.1 Cultural Diversity and Ethnicity	3-73
	3.3.3.2 Historical and Archaeological Resources	3-73

TABLE OF CONTENTS
(Continued)

Section		Page
	3.3.4 Existing Guddu Project	3-74
	3.3.4.1 Primary and Secondary Infrastructure Development	3-74
	3.3.4.2 Changes in Lifestyle, Cultural Patterns and Attitudes	3-78
	3.3.4.3 Project Needs	3-78
4.0	ENVIRONMENTAL IMPACTS OF THE PROPOSED PROJECT AND ALTERNATIVES	4-1
	4.1 PHYSICAL ENVIRONMENT	4-1
	4.1.1 Air Quality	4-1
	4.1.1.1 General Modeling Analysis	4-1
	4.1.1.2 Source Data	4-2
	4.1.1.3 Receptors	4-4
	4.1.1.4 Meteorological Data	4-8
	4.1.1.5 Building Wake Effects	4-11
	4.1.1.6 Results	4-12
	4.1.2 Noise	4-24
	4.1.3 Water Resources	4-31
	4.1.3.1 Water Withdrawals and/or Consumptive Use	4-31
	4.1.3.2 Cooling Water Discharges	4-33
	4.1.3.3 Low Volume (Plant) Wastewater Discharges	4-35
	4.1.3.4 Seasonal Flooding of Indus River	4-42
	4.1.3.5 Domestic Wastewater From WAPDA Colony	4-45
	4.1.3.6 Site Runoff	4-46
	4.1.3.7 Oil Spill Prevention, Contaminant and Control	4-47
	4.1.3.8 Groundwater Resources	4-48
	4.1.3.9 Geology and Seismology	4-48
	4.2 ECOLOGICAL ENVIRONMENT	4-49
	4.2.1 Vegetation and Wildlife Habitat	4-49
	4.2.2 Air Quality Impacts	4-49
	4.2.2.1 Wildlife/Endangered Species	4-49
	4.2.2.2 Natural Vegetation	4-51
	4.2.2.3 Agriculture	4-51
	4.2.3 Aquatic Impacts	4-53
	4.2.3.1 Fisheries	4-53
	4.2.3.2 Endangered Species	4-57

TABLE OF CONTENTS
(Continued)

Section		Page
4.3	SOCIAL AND CULTURAL ENVIRONMENT/DEMANDS ON PRIMARY AND SECONDARY INFRASTRUCTURE	4-57
4.3.1	Land Use Impacts	4-57
4.3.2	Demographic Impact	4-58
4.3.2.1	Population Patterns	4-58
4.3.2.2	Employment and Economic Patterns	4-58
4.3.3	Primary Infrastructure	4-59
4.3.4	Secondary Infrastructure	4-61
4.3.5	Cultural Resources	4-62
4.3.5.1	Cultural Patterns and Values	4-62
4.3.5.2	Historical and Archaeological Resources	4-62
4.3.6	Transportation System	4-63
4.3.7	Occupational Health and Safety	4-64
4.3.7.1	Occupational and Safety Hazards and Potentials	4-64
4.3.8	Industrial Hazard Assessment	4-67
4.3.8.1	Rupture of Natural Gas Pipeline	4-68
4.3.8.2	Fire Associated with Rupture of Natural Gas Pipeline	4-69
4.3.8.3	Rupture of Oil Storage Tank	4-69
4.3.8.4	Fire Associated with Oil Storage Tanks	4-70
4.3.8.5	Tanker Truck Fire and Explosion	4-71
4.3.8.6	Spill of Toxic Chemical Into Wastewater Treatment System	4-71
5.0	ENVIRONMENTAL MITIGATION PLAN AND MONITORING PROGRAMS	5-1
5.1	SECONDARY INFRASTRUCTURE DEVELOPMENT	5-1
5.1.1	Health Care	5-1
5.1.2	Education	5-1
5.1.3	Police	5-2
5.1.4	Utilities	5-2
5.1.5	Transportation	5-2

Section		Page
5.2	LOCAL EMPLOYMENT	5-2
5.3	NOISE	5-2
5.4	OCCUPATIONAL [illegible] HEALTH	5-7
5.4.1	[illegible]	5-7
	[illegible] Health	5-7
	[illegible]	5-8
5.4.2	[illegible]	5-8
5.5	DOMESTIC [illegible]	5-9
5.6	EMERGENCY [illegible] PLANNING	5-9
5.7	[illegible]	5-12

REFERENCES

APPENDIX A--Land and [illegible]

ATTACHMENT I--Pro Forma for [illegible] Impact Assessment

ATTACHMENT II--Proceedings of [illegible] Session

BEST AVAILABLE DOCUMENT

LIST OF ACRONYMS AND ABBREVIATIONS

AAQS	Ambient [illegible] Standards
ADB	Asian [illegible]
BCM	bank cubic [illegible]
BOD	biochemical [illegible] demand
Btu	British [illegible]
Btu/kW	British [illegible] per kilowatt
°C	degrees [illegible]
CC	[illegible]
CDM	Climate [illegible] Model
CFR	Code of [illegible] Regulations
cfs	cubic [illegible]
CITES	Convention [illegible] International Trade of Endangered Species
Cl^-	chloride
cms	cubic [illegible] second
cm/sec	centimeters [illegible] second
CT	combustion [illegible]
cusec	cubic [illegible]
dBA	A-weighted [illegible]
EA	Environmental [illegible] Assessment
EEI	Edison Electric [illegible] Institute
EMP	Environmental [illegible] Mitigation Plan
ENERPLAN	Ministry of [illegible]
ESSA	Environmental [illegible] Social Soundness Assessment
ESE	Environmental [illegible] Science and Engineering, Inc.
ESP	electrostatic [illegible] precipitation
°F	degrees [illegible]
ft	foot
gal	gallon
GEP	Good Engineering [illegible] Practice
GOP	Government [illegible]
GSP	Geological [illegible] Pakistan
GT	gas turbine
GTCC	gas turbine [illegible] cycle
ha	hectare
HRSG	Heat Recovery [illegible] Generator
ISCLT	Industrial [illegible] Complex Long-term
ISCST	Industrial [illegible] Complex Short-term
kcal/kwhr	kilocalories [illegible] kilowatt-hour
KBN	KBN Engineering [illegible] Applied Sciences, Inc.
KESC	Karachi Electric [illegible] Supply Company
km	kilometer
km^2	square kilometer
kV	kilovolt
kW	kilowatt
$lb/10^6$ Btu	pounds per [illegible] British thermal units
L_{dn}	day-night [illegible]
L_{eq}	equivalent [illegible] ground level
m	meter
m^3/day	cubic meters [illegible] day
m^3/year	cubic meters [illegible] year

BEST AVAILABLE DOCUMENT

LIST OF [illegible] ABBREVIATIONS

m/s	meters p[illegible]
mb	millibar
mg/L	milligram[illegible]
MH	Ministry [illegible]
MI	Ministry [illegible]
ML	Ministry [illegible]
mm	millimeter
MPD	Ministry [illegible] and Development
MSL	mean sea [illegible]
MT/day	metric to[illegible]
MT/yr	metric t[illegible]
MW	Megawat[illegible]
NCCW	National [illegible] Conservation of Wildlife
NO_x	nitrog[illegible]
NO_2	nitrogen [illegible]
NWS	National [illegible]
PEPA	Pakistan [illegible] Protection Agency
PM	particula[illegible]
PMS	Pakistan [illegible] Society
Rs	Pakistan [illegible]
SO_2	sulfur dio[illegible]
SPL	sound pr[illegible]
TSP	total sus[illegible] [illegible]ates
UNAMAP	User's [illegible] Models for Air Pollution
us/cm	10^{-6} [illegible] [illegible]ter
ug/m^3	microgram[illegible] [illegible]er
USAID	United St[illegible] [illegible] International Development
USGS	United St[illegible] [illegible] Survey
VOC	volatile [illegible] [illegible]ounds
WAPDA	Water and [illegible] [illegible]ment Authority
WHO	World He[illegible] [illegible]n

BEST AVAILABLE DOCUMENT

LIST OF TABLES

Table		Page
1.4-1	Major Environmental [illegible] and Regulations [illegible]	1-6
1.4-2	Applicable Environ[illegible] Guidelines for Guddu Power Plant [illegible]	1-7
2.2-1	Summary of [illegible] Generation Program [illegible]	2-3
2.4-1	Summary of [illegible] and Associated [illegible] for the 300 MW [illegible]	2-6
2.4-2	Summary of [illegible] and Associated [illegible] for the 300 MW [illegible]	2-9
3.1-1	Temperature [illegible] for Selected [illegible] Northern Sind Provi[illegible]	3-5
3.1-2	Meteorological Data [illegible] at the Rohri Meteorological [illegible]	3-7
3.1-3	Operating [illegible] ing Guddu Units	3-10
3.1-4	Characteristics of [illegible] at Guddu Power Development	3-11
3.1-5	Summary of [illegible] Existing Guddu Units	3-12
3.1-6	Air Pollutant [illegible] Existing Guddu Units	3-15
3.1-7	Summary of [illegible] Particulate Matter Concentrations [illegible] Stations; May 1985 [illegible]	3-17
3.1-8	Predicted Maximum [illegible] Concentrations Due to Existing Sources [illegible] Development	3-19
3.1-9	Results of Survey of [illegible] Sources at Guddu Power Development	3-22
3.1-10	Results of [illegible] of 450/600 MW Combined Cycle Plant [illegible]	3-24

BEST AVAILABLE DOCUMENT

Table		Page
3.1-11	Results of Guddu [illegible] Survey	3-26
3.1-12	Summary of Average [illegible] at Sukkur	3-31
3.1-13	Summary of Total [illegible] at Sukkur	3-32
3.1-14	Summary of Observed [illegible] Annual Discharges of the Indus River, [illegible] Downstream of the Guddu Barrage for [illegible] 1987 (26 years)	3-35
3.1-15	Summary of Observed [illegible] Annual Discharges of the Indus River, [illegible] of the Guddu Barrage for 1962 [illegible] years)	3-36
3.1-16	Summary of Observed [illegible] Water Elevation of the Indus River, [illegible] Downstream of the Guddu Barrage for [illegible] 1987 (26 years)	3-37
3.1-17	Summary of Observed [illegible] Annual Water Elevation and Discharge Into [illegible] Canal for 1962 through 1987 [illegible]	3-40
3.1-18	Summary of [illegible] and Associated Potable Water Used	3-41
3.1-19	Summary of [illegible] and Associated Sanitary Wastewater [illegible] (Metric Units)	3-44
3.1-20	Summary of Indus River [illegible] Canal Water Quality	3-46
3.1-21	Summary of Indus [illegible] Quality at Sukkur, Downstream of Guddu	3-48
3.1-22	World Health Organization International Drinking Water Criteria	3-49
3.1-23	Summary of Shallow [illegible] Water Quality at Guddu	3-53
3.2-1	General Wildlife Habitat [illegible] Guddu Study Area	3-55
3.2-2	Endangered, Threatened [illegible] Vulnerable Species Potentially Occurring [illegible] Study Area	3-57
3.3-1	Growth, Density and [illegible] of Population of Pakistan	3-60

BEST AVAILABLE DOCUMENT

Table		Page
3.3-2	Area, Population, [illegible] Household Size by Districts Near [illegible] Size 1980-81	3-61
3.3-3	Health Care Utilization Statistics, WAPDA Hospital	3-68
4.1-1	Major Features of the [illegible] Model	4-3
4.1-2	Operating Parameters for Proposed Guddu Units	4-5
4.1-3	Summary of Stack [illegible] for Proposed Guddu Units	4-6
4.1-4	Air Pollutant Emission Rates for Proposed Guddu Units	4-7
4.1-5	Comparison of Air [illegible] Model and Meteorological [illegible] Input Requirements to [illegible] Available from Meteorological [illegible] at Rohri and Multan	4-10
4.1-6	Summary of Actual and [illegible] Building Dimensions Used in [illegible] Building	4-13
4.1-7	Comparison of [illegible] Concentrations Due to the Proposed [illegible] Operating in [illegible] Simple Cycle Mode	4-14
4.1-8	Predicted Maximum [illegible] Concentrations Due to Existing [illegible] Sources at Guddu Power Development	4-16
4.1-9	Typical Plant Equipment [illegible] with the 300 MW [illegible] Expansion [illegible] Predicted Noise Levels	4-25
4.1-10	World Bank Noise Guidelines	4-30
4.1-11	Priority Pollutants in [illegible] by Waste Stream Sources	4-37
4.1-12	Proprietary Chemicals [illegible] Power Plants and Containing USEPA [illegible]	4-38
4.1-13	Boiler Blowdown Characterization	4-39
4.1-14	Summary of Log-Pearson [illegible] Analysis of Peak Flood Flows and Flow [illegible] of the Indus River Upstream of [illegible]	4-43

BEST AVAILABLE DOCUMENT

Table		Page
4.1-15	Summary of Log-Pearson Type III Analysis of Peak Flood Flows and Flood Elevations of the Indus River Downstream [illegible] Barrage	4-44
4.2-1	Predicted Maximum [illegible] Concentrations of SO_2 and NO_2 for the Guddu [illegible] Cycle Power Complex	4-50
4.2-2	Lowest SO_2 Doses Reported [illegible] Affect Natural Vegetation	4-52
4.2-3	Lowest SO_2 Doses Reported [illegible] Affect Crops	4-54
4.2-4	Lowest Nitrogen Di[illegible] Reported to Affect Crops	4-56
4.3-1	Residential Colony Housing Construction (1986-[illegible])	4-60
5.5-1	Conceptual Design for a Facultative/Maturation Pond System for Existing and Anticipated Wastewater From the [illegible] and Guddu	5-10
5.7-1	Recommended Monitoring Program for the Guddu Power Plant Expansion	5-13

BEST AVAILABLE DOCUMENT

LIST OF FIGURES

Figure		Page
1.3-1	Site Location Map	1-4
2.4-1	Location of Existing and Proposed Facilities at the Guddu Power Plant	2-5
3.1-1	Meteorological Data of Guddu Site and Pakistan Service Stations	3-4
3.1-2	Wind Bars for [illegible] and 1987 Meteorological Data	3-8
3.1-3	Location of Existing and Proposed Air Emission Sources	3-14
3.1-4	Estimated Baseline [illegible] Noise Levels (dBA), Guddu Power Development	3-28
3.1-5	Estimated Baseline [illegible] Noise Levels (dBA), Guddu Power Development	3-29
3.1-6	Indus River Discharge, April 1987 - March 1988	3-34
3.1-7	Feeder Canal Discharge, April 1987 - March 1988	3-39
3.3-1	Land Use Map	3-70
4.1-1	Predicted Maximum Probable 3-hour Average SO_2 Concentrations	4-18
4.1-2	Maximum Probable 24-hour Average SO_2 Concentrations Predicted for All Sources	4-19
4.1-3	Maximum Probable 24-hour Average NO_2 Concentrations Predicted for All Sources	4-20
4.1-4	Maximum Probable 24-hour Average NO_2 Concentrations Predicted for All Sources	4-21
4.1-5	Maximum Probable Annual Average NO_2 Concentrations Predicted for All Sources	4-22
4.1-6	Predicted Noise Impact (dBA) of the Proposed 300 MW GTCC Expansion Only	4-27
4.1-7	Predicted Future Ambient Noise Levels (dBA) with Proposed 300 MW GTCC Expansion, Guddu Power Development	4-28

BEST AVAILABLE DOCUMENT

Figure		Page
4.1-8	Predicted Future [illegible] Noise Levels (dBA) with Proposed [illegible] GTCC Expansion, Guddu Power Development	4-29
5.3-1	Predicted Noise [illegible] of the Proposed 300 MW GTCC [illegible]	5-4
5.3-2	Predicted Future [illegible] Noise Levels (dBA) with Proposed [illegible] Expansion, with Noise Barrier	5-5
5.3-3	Predicted L_{eq} Noise [illegible] with Proposed 300 GTCC Expansion, with Noise Barrier Barrier	5-6

BEST AVAILABLE DOCUMENT

1.0 INTRODUCTION

1.1 ENVIRONMENTAL ASSESSMENT [illegible] AND SCOPE

This document, titled "Environmental and Social Soundness Assessment (ESSA) Guddu Power Plant Expansion Project" provides a discussion of the significant environmental and social effects, as well as proposed mitigative measures, for a 300 MW combined cycle power plant expansion project proposed to be located near the Guddu Barrage on the Indus River, Sind Province, Pakistan. The expansion project would consist of replicating one-half of a 600 MW combined cycle plant currently nearing completion at the site. The 600 MW facility is funded by the United States Agency for International Development (USAID) and the Asian Development Bank (ADB) for the purpose of assisting the Government of Pakistan (GOP) in developing needed electric power generating capacity. The GOP agency responsible for electric supply is the Water and Power Development Authority (WAPDA). The purpose of this document is to provide representatives of the host country and donor organizations a clear understanding of the significant impacts of the project to the natural and human environment, as well as the project's benefits in supplying the necessary electrical energy for Pakistan. The ESSA includes an evaluation of alternatives or mitigative measures which would avoid or minimize adverse impacts or enhance the quality of the environment, so that the expected benefits of development objectives can be weighed against any adverse impacts upon the human environment, or any irreversible or irretrievable commitment of resources.

From this evaluation, monitoring programs were developed to assess the project's impacts and to provide a mechanism for managing environmental effects as they occur. These monitoring programs will provide the basis for WAPDA, the private sector, and GOP agencies to implement an environmental program for the project.

KBN Engineering and Applied Sciences, Inc. (KBN), under subcontract to Gibbs & Hill, Inc., prepared the ESSA associated with the construction and operation of the proposed 300 MW addition to the existing power plant complex.

BEST AVAILABLE DOCUMENT

Gibbs & Hill provided technical assistance in engineering disciplines and in Pakistan. Overall direction of the ESSA preparation was performed by USAID.

Preparation of the Environmental and Social Soundness Assessment followed the procedures of:

1. The Government of Pakistan (GOP) Environmental Policy and Regulations (Ordinance No. XXVII of 1983 and Environmental Pro forma),
2. The United States Agency for International Development (USAID) Environmental Policy and Regulations (PD-6, 22CFR216), and
3. The environmental guidelines of the World Bank and Asian Development Bank (ADB).

The preparation of the ESSA involved a detailed assessment of a project and an evaluation of alternatives. The results of this work are presented in five major sections plus attachments. This section (1.0) provides an overview of the project which was evaluated during the course of ESSA preparation.

A detailed description of the physical, biological, and social environments affected by the project is presented in Section 3.0. Section 4.0 presents the detailed analysis of environmental impacts and Section 5.0 presents the proposed mitigation plans.

The index for the GOP Environmental Pro forma for the Project is presented as Attachment I. Attachment II contains the record of the scoping session for the project which was held on 1 March 1988. During this scoping session, a brief overview of the scope of the ESSA was presented and a dialogue established on the major areas of interest by attendees.

1.2 OBJECTIVES OF THE PROJECT AND THE GOVERNMENT OF PAKISTAN

The shortage of electric power is one of the most serious obstacles to the economic and social development of Pakistan. Under the range of current and

BEST AVAILABLE DOCUMENT

potential electrical energy demand. About 800 MW/year in new thermal generating capacity will be required in the early 1990s to assist in alleviating this shortage as well as providing for future energy needs. In the latest power development plan (WAPDA, 1986), eight major areas of actions are specified:

1. Electrification of [illegible] percent (80,700) of the villages in Pakistan by June 1990;
2. Complete elimination of load shedding by January 1990;
3. Addition of 2,000 MW of generation by December 1989 and 11,198 MW by December [illegible];
4. Addition of about [illegible] 500-kilovolt (kV) and 220-kV transmission lines by 1990-1991;
5. Implementation of load management and tariff rationalization measures;
6. Continuation of electrical loss reduction program;
7. A total investment outlay (excluding Kalabagh project) of about Pakistan rupees (Rs) 118 billion by 1991; and
8. To ensure a self-financing ratio of 40 percent, a suitable annual increase in average energy sale price in future years.

The Guddu Expansion Project has been proposed as one facet of this comprehensive energy management plan to provide the needed generation.

1.3 OVERVIEW OF PROJECT AND STUDY AREA

The Guddu expansion project will consist of a 300 MW combined cycle facility consisting of the following components: two 100 MW gas turbine electric generators, two heat recovery steam generators and one 100 MW steam turbine-electric generator, and associated equipment. The project will be located in the Jacobabad district in northern Sind Province (Figure 1.3-1) at the existing Guddu power plant complex. The existing plant consists of a 640 MW steam electric station consisting of two 110 MW units and two 210 MW units.

The existing 600 MW combined cycle plant, as well as the expansion, is fueled with natural gas with diesel [illegible] during gas interruptions. Natural gas is supplied by pipeline from the [illegible], Mari and Kandhkot gas fields.

BEST AVAILABLE DOCUMENT

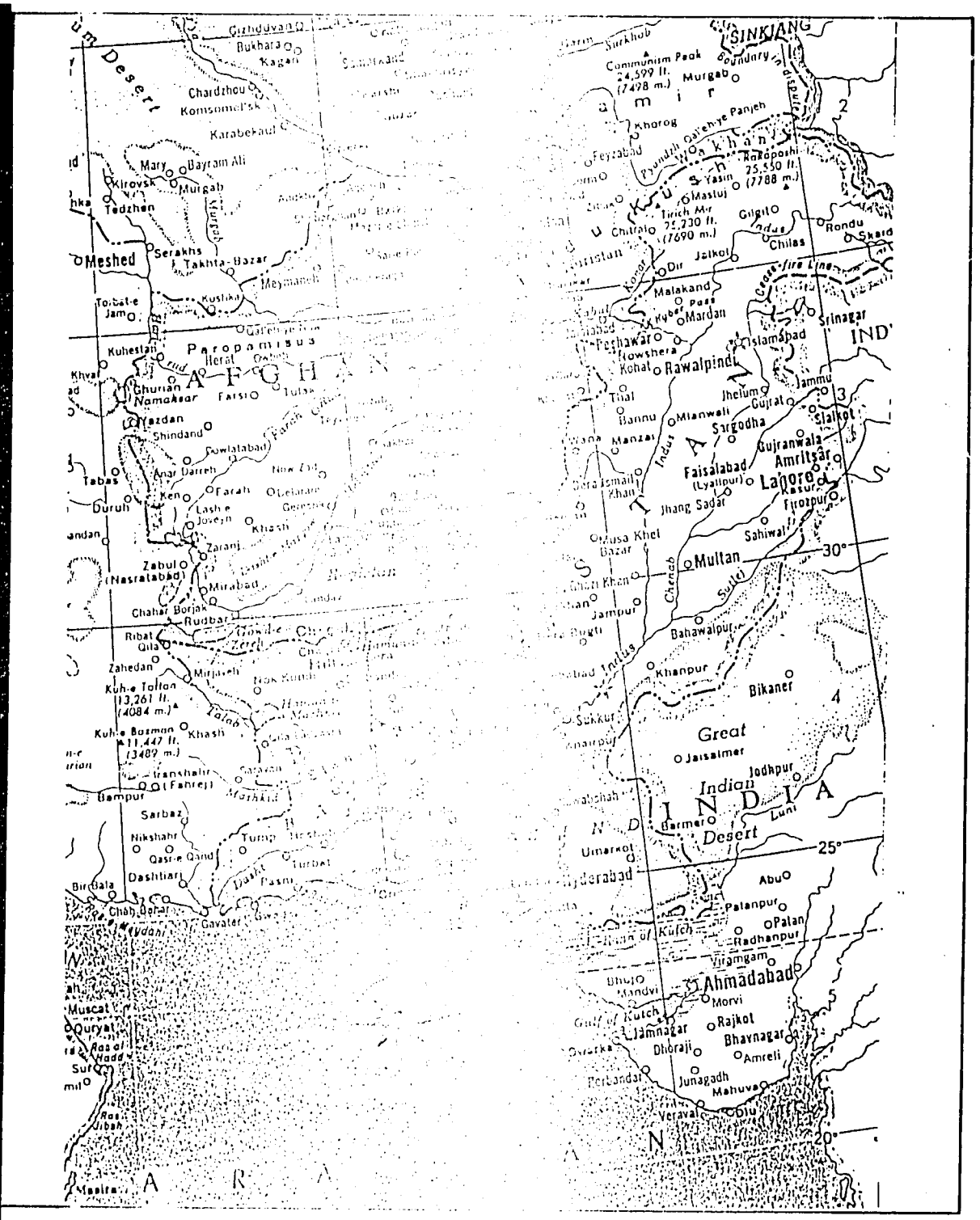

Figure 1.3-1. Site Location Map

★ Project Site

KBN

BEST AVAILABLE DOCUMENT

1.4 ENVIRONMENTAL POLICY, REGULATIONS AND PERMIT REQUIREMENTS

1.4.1 Government of Pakistan

With the promulgation of the Pakistan Environmental Ordinance of 1983, GOP has initiated the mechanism for formulating national environmental policy and developing and enforcing national environmental quality standards. Policy and standards approval is the purview of the Pakistan Environmental Council, whereas standards development and enforcement, as well as other environmental programs, are administered by the Environmental and Urban Affairs Division of the Ministry of Housing and Works. For the Guddu project, GOP requires the preparation of an ESSA via the requirement for an Environmental Pre forma (Ordinance [illegible] LXVII of 1983). Currently, no environmental standards have been adopted by GOP; however, draft standards have been proposed that would restrict the discharge of pollutants into the atmosphere and water.

Additionally, GOP and the Sind Government have established legislation governing antiquities, endangered species, national parks, wildlife sanctuaries, game reserves, forestry, and water management.

The major environmental legislation and regulations are presented in Table 1.4-1.

1.4.2 Donor Organizations

Multilateral development organizations, such as the World Bank and ADB, have established procedures for the evaluation of potential environmental impacts and the adequacy of pollution control measures of financed projects (i.e., environmental guidelines). These evaluations are concerned with both the natural and human environment, as well as the health and safety of workers. The Guddu expansion project would be required to consider and evaluate, based on project-specific [illegible], Environmental Guidelines established by the World Bank for developing countries. These guidelines are used by USAID where the host country has adopted no environmental standards. As a result, the World Bank Environmental Guidelines which are summarized in Table 1.4-2 for power plants are considered appropriate for the project.

BEST AVAILABLE DOCUMENT

Table 1.4-1. Major Environmental Legislation and Regulations for Pakistan

Type	Authority	Administering Agency	Requirements
Comprehensive Environmental Protection	Ordinance No. XXVII of 1983	Environmental and Urban Affairs Div. Ministry of Housing and Works	Environmental Pro forma
Protection of Antiquities	Act No. VI of 1977	Ministry of Culture, Archaeology, Sports, and Tourism; Dept. of Archaeology	Provides protection and preservation of historically and archaeologically important sites
Water Resources	West Pakistan Act of 1958	WAPDA	Management of water resources
	Sind Irrigation Act of 1879	Government of Sind, Irrigation and Water Department	Granting of water use from Indus River
Wildlife	West Pakistan Wildlife Protection Ordinance of 1959	Zoological Survey; National Council for Conservation of Wildlife; Ministry of Food, Agriculture, and Cooperatives	Promote conservation and establish limits on hunting
Wildlife	Sind Wildlife Protection Ordinance	Government of Sind, Ministry of Forest, Wildlife, and Forestry	Promote conservation and limit hunting
Forests	Forest Act of 1927 No. XVI	Ministry of Food, Agriculture, and Cooperatives; Pakistan Forest Institute; Government of Sind, Ministry of Forest, Wildlife, and Forestry	Protection; regulation of exploitation of forests

BEST AVAILABLE DOCUMENT

Table 1.4-2. Applicable Environmental Guidelines for Guddu Power Plant Expansion

Environmental Resource	Criteria
Air	Emissions: 1. SO_2--454 MT/day (500 tons/day) 2. Particulate--100 mg/m^3 of exhaust gas Ambient Quality: 1. SO_2--100 ug/m^3 annual average 2. Particulate--[illegible] ug/m^3 annual geometric mean [illegible] ug/m^3 maximum 24-hour average 3. NO_2--100 ug/m^3 annual average
Water and Land	No specific limitation, but general restrictions on affecting human health and welfare
Noise	Noise levels (peak average) required for protection of public health and welfare recommended in the World Bank Environmental Guidelines (July 1984)
Social and Cultural	Secondary project effects to the general population shall be addressed and impacts to tribal people shall be mitigated
Occupational	World Bank Occupational Health and Safety Guidelines for Power Plants, Coal, and Fuel Oil; TLVs by American Conference of Governmental Industrial Hygienists

Finalized criteria will be developed with coordination between USAID, WAPDA and the World Bank Office of Environmental Affairs.

Notes: SO_2 - Sulfur dioxide.
MT/day - Metric tons per day
ug/m^3 - Micrograms per cubic meter.
NO_x - Nitrogen oxide.
lb/10^6 Btu - Pounds per million British thermal units.
NO_2 - Nitrogen dioxide.

Sources: World Bank, 1984a.

BEST AVAILABLE DOCUMENT

Bilateral funding organizations, such as USAID, have established policies for evaluating the environmental consequences of funded projects. For USAID, environmental policies have been included as part of promulgated environmental procedures [22 Code of Federal Regulations (CFR) Part 216; S 216.1(b)] and in an official USAID policy determination on Environmental and Natural Resource Aspects of Development Assistance (PD-6, April 26, 1983). An ESSA, which is a detailed study of potentially significant environmental and social impacts, must be prepared as part of certain USAID-funded projects. The purpose of the ESSA is to:

1. Ensure that environmental impacts are identified and considered prior to a final decision and that appropriate safeguards are adopted;
2. Assist the host government in developing effective environmental programs;
3. Identify impacts to the natural and human environment; and
4. Define environmental limiting factors for the project.

The ESSA must also include an analysis of the social soundness of the project following the guidelines in the USAID Handbook 3, Appendix 3F, "Social Soundness Analysis." This analysis procedure requires:

1. Evaluation of social cultural compatibility;
2. Assessment on the spread of the project to other groups not specifically targeted; and
3. Evaluation of the social benefits and impacts of the primary and secondary populations.

BEST AVAILABLE DOCUMENT

2.0 DESCRIPTION OF PROJECT ALTERNATIVES

2.1 MANAGEMENT ALTERNATIVES

2.1.1 No-Action Alternative

Pakistan has an installed capacity of about 2,900-MW hydro-power generation and over 3,500-MW [including Karachi Electric Supply Company (KESC)] thermal-power generation (WAPDA, 1986). This capacity is insufficient to meet current demand and load shedding has occurred. To meet this existing energy need and alleviate load shedding with associated socioeconomic impacts, as well as provide for future demand, Pakistan is projected to need approximately 800 MW of new capacity each year until the turn of the century. The "no-project" alternative would worsen the current shortage of electrical energy and result in significant social/economic impacts.

2.1.2 Purchases of Required Power from Other Sources/Joint Projects

WAPDA and KESC are the major bulk electrical suppliers in Pakistan (WAPDA, 1986). KESC serves Karachi City and surrounding areas and WAPDA serves the rest of the country. Limited transfers of power from one system to the other are possible through a double circuit 220-kV transmission system linking Karachi with the WAPDA system. Several projects, including the KESC projects, are currently included in the generation plan; however, the proposed gas and oil-fired projects, including the Guddu expansion project, are insufficient to eliminate the need for additional generation.

Energy conservation would produce benefits; however, in itself energy conservation would not lower demand sufficiently to eliminate the need for additional generation.

2.1.3 Postponing Unit Retirements, Reactivating, and/or Upgrading Existing Plants

Postponing unit retirements would not substantially increase electrical supply. Rehabilitation of older plants is currently a part of WAPDA's expansion program (WAPDA, 1986). Nine units from seven existing generating stations (Multan, Faisalabad, Guddu, Sukkur, Quetta, Shahdara, and Kotri) are scheduled for upgrades with an in-service rehabilitation date of about

BEST AVAILABLE DOCUMENT

9

June 1989; however, an increase of about 126 MW is anticipated from these upgrades.

The proposed size of the Guddu expansion, i.e., 300 MW, is optimum for combustion turbines and heat recovery steam generators (HRSGs) selected for the project. A smaller combined cycle plant would not be practical based on an optimum size configuration of 2 x 100 MW gas turbines and 1 x 100 MW HRSG. In addition, this configuration has benefits of replication, i.e., same spare parts, operation and maintenance procedures, training requirements, etc., of the existing 100 MW plant.

2.2 ALTERNATIVE PROJECTS

The current electrical generation plan for Pakistan (WAPDA, 1986) includes provisions for a variety of generation projects including hydro, steam, and combustion turbine combined-cycle generation (see Table 2.2-1). A number of these projects have been committed to (and in some cases initiated or already completed). Generation studies sponsored by USAID and coordinated with WAPDA have identified the need for additional baseload capacity to meet 1991-1993 demand. Viable alternatives for increased power generation include plants fired with natural gas, domestic coal, imported coal, or imported oil; therefore, all three types of plants are included in the generation plan.

2.3 ALTERNATIVE FUELS

The primary fuel is natural gas with high speed distillate (HSD) oil used as a backup fuel. Fuel oil will be burned only during periods when natural gas is curtailed which usually occurs during December and January. From economic, engineering and environmental perspectives, this fuel strategy is desirable.

Using domestic natural gas is economically preferable to using imported oil. Also, because of lower ash contents of natural gas, maintenance costs will be reduced. This advantage has engineering benefits by potentially reducing unit outages. Emissions of particulate matter, sulfur dioxide and nitrogen oxides are all lower on natural gas, yet with HSD fuel oil, emissions are

BEST AVAILABLE DOCUMENT

10

Table 2.2-1. Summary of Pakistan's Power Generation Program (after April 1986)

Station/Project Designation*	Unit Numbers	Total Capacity (MW)	In Service Dates
Kot Addu CT CC	1-8 9-10	800 200	From Nov 86 to Feb 89 Jun 89
Guddu CC	5,6	200	Dec 87 and Jan 88
Jamshoro Imported Oil	1-6	1,570	From Dec 88 to Dec 93
KESC Steam	D-3,D-4,D-5	630	From Feb 89 to Dec 89
Mangla	9 & 10	200	Sep 89
Undesignated CT	1,2	200	Dec 89
Tarbela	11-17	2,928	From Jan 90 to Dec 95
Faisalabad CC	9 & 10	80	Feb 90
Kotri CC	7 & 8	40	Feb 90
Multan	1-3	630	From Oct 90 to Oct 91
Lowhead Hydro	+	420	From Dec 90 to Dec 92
Lakhra Coal	1 & 2	600	From Mar 92 to Dec 92
Undesignated Imported Coal	1-3	1,200	From Dec 93 to Dec 95
Kalabagh	1-5	1,500	From Sep 94 to Sep 95

* CT = combustion turbine; CC = combined cycle.
\+ Chashma, Taunsa, and Jinnah.

Source: WAPDA, 1986.

BEST AVAILABLE DOCUMENT

//

substantially lower than residual oil or coal. In addition, the ability to use HSD fuel oil provides operational flexibility to supply electrical energy during periods of natural gas curtailment.

2.4 ALTERNATIVE DESIGNS

2.4.1 Power Block

The expansion project will consist of two combined cycle units. Each unit will consist of 2-100 MW simple cycle combustion turbines followed by an HRSG and 100 MW steam electric generator. Both simple cycle (i.e., only the combustion turbine) and combined cycle operation are possible. This equipment is an optimal power block configuration since the exhaust gas energy from the combustion turbines is matched with the HRSG/steam electric generator output.

The existing Guddu plant complex also has four steam electric units of various designs. Heat rates for these non-cycle units are reported to range from 2,100 Kcal/Kwhr (8,375 BTU/kwhr) for the 100 MW Czechoslovakian units to 2,338 Kcal/kwhr (9,278 BTU/kwhr) for the 210 MW Russian and Chinese units. Under combined cycle operation, the heat rate for the proposed units is 1,850 Kcal/kwhr (7,341 BTU/kwhr) which is 12.3% lower than the Czechoslovakian units and 20.9% lower than the Russian/Chinese units. This better heat rate for the proposed power block configuration is a preferred alternative design for the facility. Figure 2.4-1 presents the Guddu site with the existing and additions for the proposed combined cycle plant.

2.4.2 Water Supply and Treatment

Water uses in the proposed 300 MW combined cycle expansion include once-through condenser cooling water, cooling tower makeup, plant service water and potable water. Estimates of anticipated water uses for the proposed 300 MW expansion are presented in Table 2.4-1.

Proposed water supply and treatment systems for the 300 MW expansion will be very similar (if not identical) in function and process to the existing systems for the water supply and treatment for the existing 450 MW combined cycle units; the size of the water supply and treatment system will be

BEST AVAILABLE DOCUMENT

12

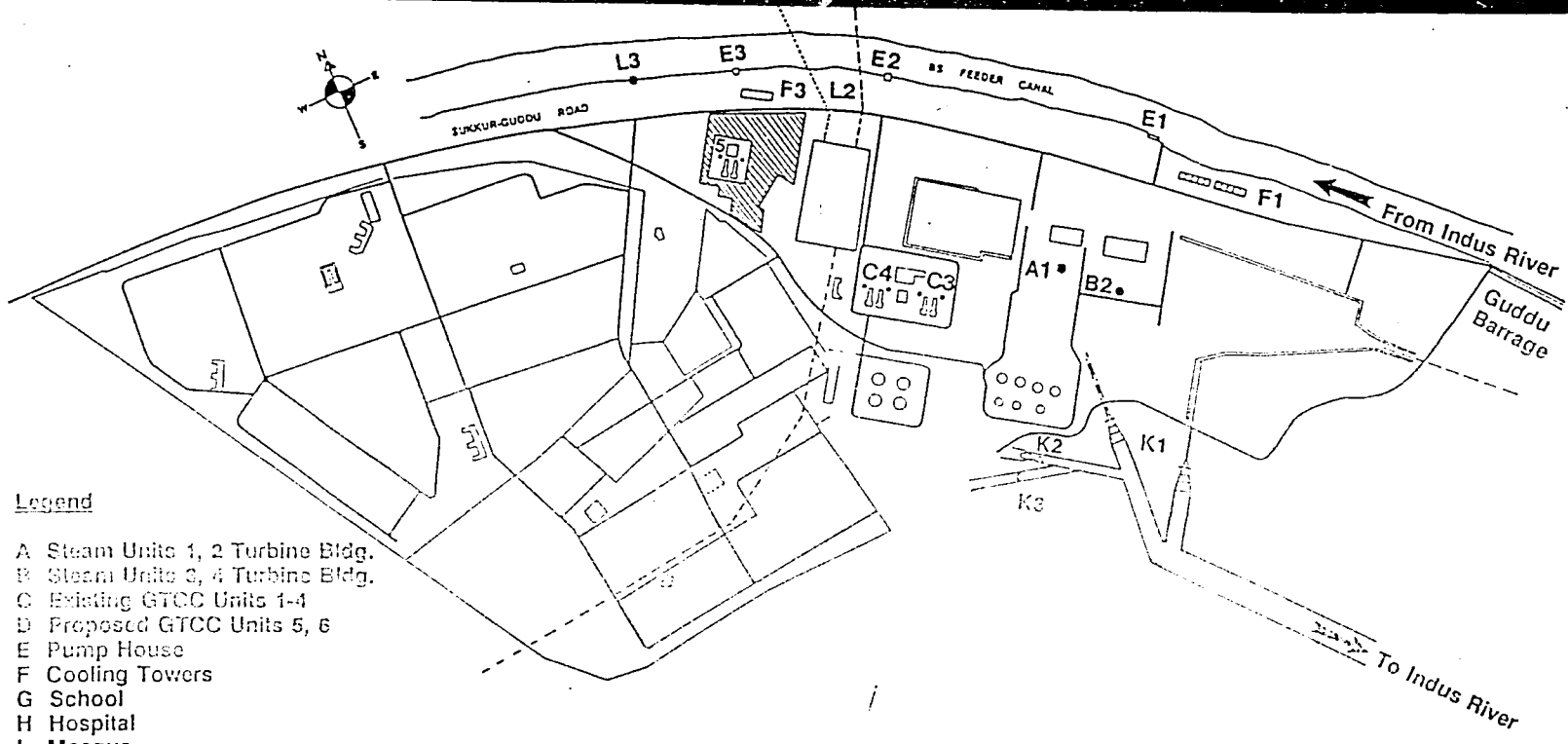

Legend

A Steam Units 1, 2 Turbine Bldg.
B Steam Units 3, 4 Turbine Bldg.
C Existing GTCC Units 1-4
D Proposed GTCC Units 5, 6
E Pump House
F Cooling Towers
G School
H Hospital
I Mosque
J Gas Mixing/Reducing Areas
K Circulating Water and Treated Wastewater Discharge
L Alternative (Low Flow) Discharge
— Existing 500 KV line
... Proposed 500 KV line
* Planned

1. Steam Units
2. Existing HRSG
3. Proposed

Figure 2.4-1. Location of Existing and Proposed Facilities at the Guddu Power Plant

KBN

BEST AVAILABLE DOCUMENT

Table 2.4-1. Summary of Anticipated Industrial and Associated Potable Water Use for the 300 MW Combined Cycle Expansion.

Water Use	Maximum Water Use (m^3/min)	(gal/min)
ONCE THROUGH COOLING OPERATIONAL SCENARIO		
Circulating Cooling Water	458.0	121,000
GT Cooling Water Pump	22.7	6,000
Plant Service Water	13.2	3,500
Subtotal - Industrial Uses	493.9	130,500
Plant and Colony Potable Water	0.6	150
Total Existing Station Water Demand - Once Thru Operations	494.5	130,650
COOLING TOWER OPERATIONAL SCENARIO		
Cooling Tower Makeup	6.9	1,815
GT Cooling Water Pump	22.7	6,000
Plant Service Water	13.2	3,500
Subtotal - Industrial Uses	42.8	11,315
Plant and Colony Potable Water	0.6	150
Total Existing Station Water Demand - Cooling Tower Operations	43.4	11,465

Note: 1. Cooling tower makeup volume calcualted as 1.5% of the total circulating water flow.
2. Additional potable demand estimated to be 10 % of existing demand.

BEST AVAILABLE DOCUMENT

14

adjusted to reflect the smaller generation capacity of the proposed 300 MW expansion.

The primary supply source for condenser cooling water, plant service water and potable water for the proposed 300 MW expansion will be the Indus River via the B.S. Feeder Canal. Existing and proposed water supply facilities are shown in Figure 2.4-1. The proposed water supply facilities will use the existing B.S. Feeder Canal for supply from the Indus River; the water supply facilities for the existing steam and GT/HRSG units are also located on the B.S. Feeder Canal. In general, the proposed water supply intake facilities are in the immediate vicinity of those associated with the existing steam and GT/HRSG units and potentially will impact the same areas and resources.

The primary water demand for the combined cycle operation is condenser cooling. To satisfy this demand and to minimize the regional water supply impacts during low flow conditions, the proposed expansion will have and utilize facilities for both once-through and cooling tower operation. During the preponderance of the year, once-through condenser cooling water will be withdrawn from the Indus River (via the B.S. Feeder Canal) upstream of the Guddu Barrage, used for once-through condenser cooling, and discharged downstream of the Guddu Barrage.

During critical low flow periods, cooling towers will be utilized for condenser cooling. As noted in Table 2.4-1, the use of cooling towers for condenser cooling reduces the cooling water demand by 99% and the total water demand by approximately 92%.

An alternative water supply source for cooling tower makeup is shallow groundwater. However, this is a less preferable alternative as previous experiences at the site have demonstrated that the shallow groundwater is of lower quality (i.e., more mineralized) and more corrosive than the Indus River.

BEST AVAILABLE DOCUMENT

15

Other water demands (e.g., plant service, potable, GT cooling) will be supplied from the Indus River (via intake structures to be located on the B.S. Feeder Canal). Because of the highly mineralized and corrosive nature of the groundwater systems, use of shallow groundwaters for these water demands is not a feasible alternative.

Plant service water and potable water will receive treatment before use. Treatment units include: clarification (sedimentation) for suspended sediment removal; pressure filtration for additional sediment and turbidity removal; and, for boiler feed/makeup water, ion exchange demineralization.

2.4.3 Wastewater Treatment and Disposal

Major wastewater sources for the proposed 300 MW expansion include heated once-through condenser cooling water, cooling tower blowdown, plant low volume wastes, and additional sanitary wastes. Power plant low volume wastes include floor drain wastes, boiler blowdown, softener regeneration brines, filter backwash, and clarifier sludges. Estimates of anticipated wastewater volumes for the proposed 300 MW expansion are presented in Table 2.4-2.

The proposed wastewater treatment and disposal systems for the 300 MW expansion will be very similar (if not identical) in function and process to the existing systems for the wastewater treatment and disposal for the existing 450 MW combined cycle units; the size of the wastewater treatment and disposal systems will be adjusted to reflect the smaller generation capacity of the proposed 300 MW expansion. Existing and proposed wastewater disposal facilities and outfall locations are shown in Figure 2.4-1. The proposed wastewater disposal outfall locations will use the existing circulating water discharge canal (constructed as part of the existing steam and GT/HRSG units) to convey heated circulating water and treated wastewater to the Indus River. In general, the proposed wastewater disposal outfall locations are in the immediate vicinity of those associated with the existing steam and GT/HRSG units and potentially will impact the same areas and resources.

BEST AVAILABLE DOCUMENT

16

Table 2.4-2. Summary of Anticipated Industrial and Associated Sanitary Wastewater Discharges for the 300 MW Combined Cycle Expansion.

Water Use	Maximum Wastewater Discharge (m^3/min)	(gal/min)
ONCE THROUGH COOLING OPERATIONAL SCENARIO		
Once-Through Circulating Cooling Water Discharge	458.0	121,000
Low Volume Wastes	10.0	1,750
Subtotal - Industrial Discharges	468	122,750
Plant and Colony Sanitary Wastewater	0.4	99
Total Existing Station Wastewater Discharge with Once Through Cooling Operations	468.4	122,849
COOLING TOWER OPERATIONAL SCENARIO		
Cooling Tower Blowdown	1.4	363
Low Volume Wastes	10.0	1,750
Subtotal - Industrial Discharges	11.4	2,113
Plant and Colony Sanitary Wastewater	0.4	99
Total Existing Station Wastewater Discharge with Cooling Tower Operations	11.7	2,212

Note: 1. Low volume wastes estimated as 50% of the total plant service water.
2. Colony wastewater estimated as 66% of the total colony and plant potable water.
3. Cooling tower blowdown calculated based on 5 cycles of concentration and blowdown volume equals 25% of tower evaporative losses; therefore, blowdown volume will be 20% of tower makeup volume.

BEST AVAILABLE DOCUMENT

17

The major wastewater volume for the combined cycle operation is condenser cooling. To minimize water quality impacts during low flow conditions, the proposed expansion will have and utilize facilities for both once-through and cooling tower operation. During the preponderance of the year, once-through condenser cooling water will be discharged (via a discharge ditch) to the Indus River downstream of the Guddu Barrage.

During critical low flow periods, cooling towers will be utilized for condenser cooling. As noted in Table 2.4-2, the use of cooling towers for condenser cooling reduces the total cooling water discharge by approximately 99%. The primary discharge for cooling tower blowdown would be to the circulating water ditch leading to the Indus River downstream of the Guddu Barrage.

Alternatively, once-through condenser cooling water or cooling tower blowdown will be discharged back into the B.S. Feeder Canal (see Figure 2.4-1). The existing 450 MW combined cycle unit utilized such a return system. However, relatively small size and volume of the B.S. Feeder Canal and the location of this return discharge with respect to the circulating water intake results in "short-circuiting" or entrainment of the heated discharge waters into the intake system. Thus, for the once through cooling system, this entrainment of heated waters compromises the usefulness of this return system. However, for cooling tower blowdown (a substantially smaller wastewater volume), such a return/reuse system could allow reuse of certain plant wastewaters and further reduce the water supply demands during low flow conditions.

The proposed 300 MW expansion will incorporate a treatment basin to treat low volume wastes prior to discharge. This basin will treat low volume wastes by: sedimentation; flow equalization; and mixing and dilution. This treatment will effectively reduce the pollutant concentration of any individual waste stream. Treated low volume wastes will be discharged at circulating water discharge outfall and allowed to mix with circulating water discharge or cooling tower blowdown.

BEST AVAILABLE DOCUMENT

2.4.4 Solid Waste Disposal

Given that the proposed expansion will be fired by natural gas and/or fuel oil, operation of the proposed power plant will generate relatively small volume of solid waste for disposal. Any solid wastes generated as part of power plant construction or operation will be disposed of in on-site land fill and disposal areas.

2.4.5 Air Emission Controls

The emissions from the proposed combined cycle units will consist of particulate matter (PM), sulfur dioxide (SO_2), nitrogen oxides (NO_x), carbon monoxide (CO) and volatile organic compounds (VOCs); (refer to Section 4.1.1.2 for more detail). Since natural gas is the primary fuel, emissions of PM and SO_2 will be extremely low. Indeed, PM and SO_2 emissions will be much less than 1% of the emissions guidelines listed in Table 1.4-2 when natural gas is fired. Even under oil firing the maximum PM emissions will be about 3 mg/m^3 of exhaust gases compared to 100 mg/m^3 listed as the guideline; SO_2 emissions will be less than 25 MT/day compared to the guideline of 454 MT/day.

While no emission guidelines exist for CO and VOCs, emissions of these pollutants will be controlled through good combustion techniques, i.e., the best technology available for these pollutants.

Emission of NO_x under both natural gas and HSD fuel oil firing will be 0.66 lb/10^6 BTU for natural gas firing and 1.19 lb/10^6 BTU for oil firing.

NO_x emissions from combustion turbines are formed by the combination of nitrogen and oxygen in the combustion air, referred to as "thermal NO_x," and from the combination of nitrogen in the fuel with oxygen in the combustion air, referred to as "fuel-bound NO_x." Thermal NO_x can be reduced by four techniques (USEPA, 1977):

1. Reduce the combustion pressure;
2. Decrease the peak flame temperature in the combustor;
3. Reduce the effective residence time during which combustion gases remain at elevated temperature; and

DOCUMENT

19

4. Control of the amounts of nitrogen and oxygen available for production of NO_x.

For large combustion turbines, i.e., greater than 10 MW, the primary control technique involves water or steam injection to reduce NO_x emissions. While this technique has proven effective in the U.S., there are considerable drawbacks for using it for the Guddu expansion project. First, increased consumptive water use will occur. For the size of the project being considered, about 1.3 m^3/min (320 gallons/minute) will be required to reduce emissions about 50%. This consumptive use will be about two times that estimated to be required for potable purposes. Second, the water (or steam) injected into the turbine must be demineralized. This will create substantial increases in capital costs for the water treatment facility and generate considerably more wastewaters (i.e., resin regenerative wastewaters). Third, the heat rate for the project will increase, i.e., lower thermal efficiency, and require more fuel per kwhr generated. When these factors are considered along with the low environmental impacts (see subsection 4.1.1.6), the use of water (or steam) injection is not considered an appropriate alternative for the project.

2.5 INFRASTRUCTURE ALTERNATIVES

The existing Guddu power plant workers' colony has been designed and built by WAPDA, based on WAPDA's standard practices and procedures for layout and construction of such colonies. The expansion project will also follow the same practices and procedures.

The existing power plant workers' colony includes provisions for:

1. Housing;
2. Utilities, including potable water, electricity, sewage disposal, and municipal refuse;
3. Primary and secondary education facilities;
4. Mosque;
5. Recreational facilities;
6. Fire and police protection;
7. Stores;

BEST AVAILABLE DOCUMENT

8. Training facilities;
9. Transportation;
10. Medical facilities;
11. Telecommunications;
12. Bank;
13. Post Office; and
14. Shopping Center

Some expansion of this existing colony will be required. While the expansion project will cause some direct impacts to cultural resources of the area they are not considered significant relative to the existing development at the site.

Secondary infrastructure development has occurred extensively at the site and will continue with the expansion projects.

2.6 EMPLOYMENT ALTERNATIVES

The construction and operation of the expansion project will require skilled and unskilled workers. Construction of the project will require about 1200 personnel, a majority of these will come from the existing construction activities at the site. Operation of the power plant would also require about 200 employees with a similar number of colony personnel.

During the construction and operation, most management and technical advisors would likely be available from the existing colony staff. Skilled construction workers would likely be existing personnel used on the existing 600 MW combined cycle facility, whereas any unskilled workers needed would come from the existing contingent or rural District population. It is WAPDA's policy to hire all local people for positions through Grade 16.

BEST AVAILABLE DOCUMENT

3.0 DESCRIPTION OF THE AFFECTED ENVIRONMENT

3.1 PHYSICAL ENVIRONMENT

3.1.1 Air Resources

3.1.1.1 Climatology

Pakistan is oriented in a general southwest to northeast direction, extending from 24 to 37 degrees north (°N) latitude and 60 to 77 degrees east (°E) longitude. Pakistan lies on the western boundary of the monsoon region, which is one of the major climate regions of the earth. This climate region extends from Pakistan to Japan and northern Australia in the east. The word monsoon is derived from an Arabic word meaning "season"; in meteorology it has come to be associated with prevailing winds and wet or dry weather which reverse with the seasons. Generally, monsoon is used to describe wind systems where the seasonal reversal is pronounced and exceeds a minimum number of degrees. For example, Nieuwolt (1977) has defined a monsoon as a system which shares a seasonal change of wind direction of at least 120 degrees, and both winds must have a constancy higher than 40 percent and mean resultant speed of more than 3 meters per second (m/s).

In Pakistan, the winds are generally from a northerly direction in winter and from the southwest in summer. The causes of the reversal of the wind system are related to the large size of the Asian continent and adjacent oceans and the very high and extensive mountain ranges of the continent. These ranges are oriented in an east-west direction and form a barrier between tropical and polar air masses.

The climate of Pakistan is more continental than that of other parts of the Indian subcontinent which come under a more typical monsoon regime. The summer monsoon brings maritime influences and rain, but the strength of the winds fluctuates on an annual basis. Cyclones in the monsoon season cause significant rainfall, but their frequency is variable. Rainfall throughout Pakistan is minimal because the rainfall occurs coincidentally with high temperatures, and the majority of rainfall evaporates, causing extremely arid conditions.

BEST AVAILABLE DOCUMENT

12

Pakistan has four well-defined seasons, similar to the remainder of the subcontinent, with variations in their duration. The description and duration of the seasons are:

1. Cold Weather Season: mid-December through March,
2. Hot Weather Season: April through June,
3. Monsoon Season: July through September, and
4. Post-Monsoon Season: October through mid-December.

The cold weather season is characterized by high barometric pressure [e.g., mean monthly pressure greater than 1,015 millibar (mb)], relatively low temperatures, and low amounts of precipitation. The mean monthly temperature varies from below 4 degrees Celsius (°C) [40 degrees Fahrenheit (°F)] in the mountain areas, to approximately 10°C (50°F) north of the plain area and to approximately 18°C (65°F) in the south. Rainfall during this season increases northward and westward, with 25 millimeters (mm) (1 inch) or less in the middle and lower Indus Plain, 76 to 127 mm (3 to 5 inches) in the upper Indus Plain, and 250 mm (10 inches) or more in the north and northwest.

The hot weather season is characterized by high temperatures and low rainfall amounts. The mean maximum daily temperature varies from 40 to 46°C (104 to 115°F). The highest temperatures have been recorded in the south and southwestern parts of Pakistan. Rainfall amounts are low, varying from approximately 25 to 76 mm (1 to 3 inches) over the plains to approximately 102 to 127 mm (4 to 5 inches) in the mountainous areas. The rainfall is associated with western disturbances which occur in more northerly latitudes, causing thunderstorms over the hills and widespread dust-storms over the plains.

The monsoon season is characterized by moderate temperatures, large rainfall amounts, and persistent southwest winds. The winds are due to the establishment of low-pressure systems over the Indo-Pakistan subcontinent in May and June. The monsoon flow in Pakistan is well established by July and remains constant through August. In some years, the monsoon remains active into September. During July, the mean monthly temperature exceeds 32°C (90°F) through the majority of the Indus Plain and western Pakistan. The

BEST AVAILABLE DOCUMENT

average rainfall during the season ranges from approximately 1,000 mm (25 inches) in the north Indus Plain to approximately 127 mm (5 inches) or less in the south.

The post-monsoon season is characterized by retreat of monsoon regime and is a transitional period between the monsoon regime and cool-season conditions. The high-pressure system begins to establish itself over Pakistan in mid-November. Without any active wind system, the weather produces generally dry conditions, with the least rainfall amount in October and November.

The proposed project is located in the northern part of the Sind Province. The mean maximum and minimum temperatures and rainfall data recorded at three selected stations (Figure 3.1-1) near the proposed project are presented in Table 3.1-1. In this region, the temperature generally is higher than in the south because it is located further away from the Arabian Sea. The daily range of temperature also increases with distance from the sea. In winter, the weather is generally clear and temperature is about 10°C lower than in summer. The province is influenced by the summer monsoon which has prevailing winds from the southwest, and winter monsoon with prevailing northwest wind directions.

During the summer, the intense heat over the Sind Desert creates the southeast trade winds across the equator. These winds form the southwest monsoon and are the main source of rainfall in most of the province. Although cyclones and wind storms are not common, the hot winds, which are established in early April, blow from morning to evening. During March to June, dust storms can occur frequently.

The annual rainfall is about 200 mm (7.9 inches) in the lower Sind and less than 100 mm (3.9 inches) in the upper Sind. Major portions of the rainfall occur from July to September.

3.1.1.2 Site Meteorology

Weather data has been collected by Gibbs & Hill over the last several years at the proposed project site in Guddu. The data include observations of temperature, pressure and humidity at 8:00 am and 2:00 pm, local standard

BEST AVAILABLE DOCUMENT

24

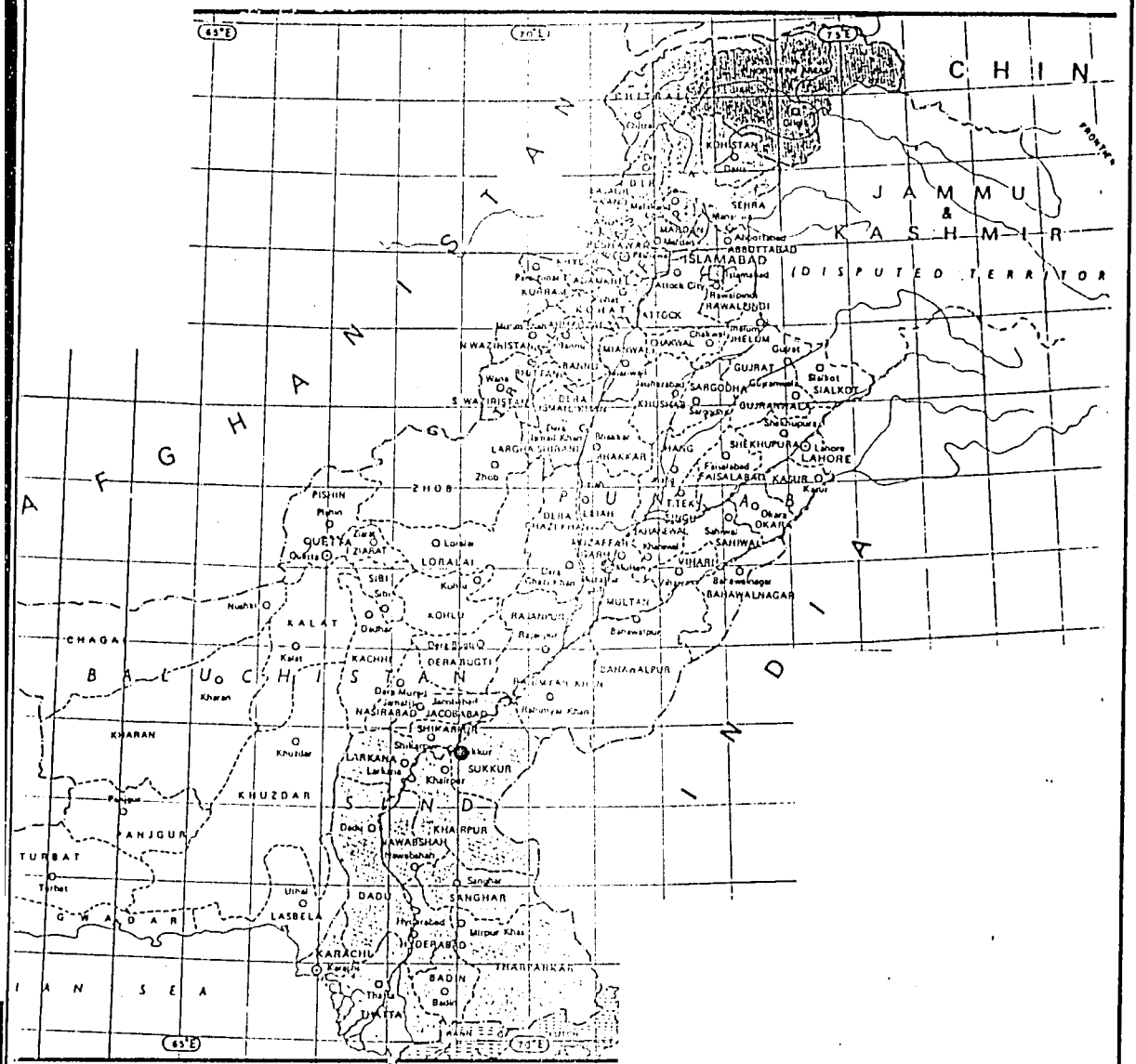

Figure 3.1-1. Location of Guddu Site and Pakistan Meteorological Service Stations

★ Project Site
● PMS Station

KBN

BEST AVAILABLE DOCUMENT

26

Table 3.1-1. Temperature and Rainfall Data for Selected Weather Stations in Northern Sind Province.

Location	Mean Temperature (°C)				Rainfall (mm)
	Summer		Winter		
	Maximum	Minimum	Maximum	Minimum	
Rohri*	42	26	26	9	NA
Jacobabad+	44	28	24	8	88
Sukkur+	42	28	24	9	90

* Based on 1985 and 1987 data from the Pakistani Meteorological Station; same as Sukkur.

\+ Population Census Organization, 1983.

NA - Not Available

BEST AVAILABLE DOCUMENT

time, and daily averages of cloud cover. However, these data are not complete (i.e., data were not collected for every hour nor for every day and did not include wind observations) to provide a meteorological description of the site. Data collected at the Pakistan meterological station in Rohri are the most complete for describing the meteorology at the proposed site location. The station is located approximately 110 km from the project site and the weather data are considered to be representative of the project site's condition (see Figure 3.1-1). The station also has a complete record of meteorological parameters, including wind direction and wind speed measurements. Meteorological data from Rohri were obtained and processed for 1985 and 1987 in order to:

1. Characterize the meteorology of the project site for periods during which weather conditions were potentially different from year to year, and
2. Estimate the air quality impacts of the proposed project in an atmospheric dispersion model.

A summary of the temperature and wind data observed at the Rohri meteorological station is presented in Table 3.1-2. The monthly temperature can range from a low of approximately 8°C in December to a high of 42°C in April and June. The southwest monsoon is predominant during the period from May to September with high humidity and sunshine. In general, wind speeds seldom exceed 10 m/s (20 knots). The northeast monsoon in the remaining period of the year brings moderate temperatures. Wind bars showing the distribution of winds on an annual basis at Rohri are presented in Figure 3.1-2.

3.1.1.3 Existing Air Pollution Sources

The existing Guddu power development consists of four (4) fossil-fuel fired, steam electric generating units and four (4) gas turbine combined cycle (GTCC) generating units. The steam units were the first generating units constructed at Guddu, and consist of two (2) Czechoslovakian units of 100 MW capacity each, a Russian unit of 210 MW capacity, and a Chinese unit of 210 MW capacity. All of these steam units burn primarily natural gas from the Sui gas field, which is piped to the Guddu site. Heavy furnace oil, brought to the site by tanker truck, is burned during the months of December and

BEST AVAILABLE DOCUMENT

Table 3.1-2. Meterological Data Collected at the Rohri Meteorological Station

Month	Temperature (°C)			Prevailing Wind Direction	Average Wind Spe (knots
	Average	Minimum	Maximum		
1985					
January	16	11	22	Northeast	1.9
February	20	12	28	East	2.0
March	26	20	33	East	2.3
April	30	23	37	Southwest	3.1
May	35	27	42	Southwest	3.1
June	34	27	42	South	4.7
July	31	27	36	South	3.3
August	31	26	35	South	4.1
September	30	24	35	Southwest	2.4
October	26	19	32	Northeast	1.6
November	21	15	28	East	1.4
December	NA	NA	NA	NA	NA
1987					
January	15	9	22	East	1.8
February	18	13	24	East	2.2
March	22	17	28	East	2.7
April	28	21	36	West	2.1
May	31	24	37	Southwest	3.9
June	35	29	42	Southwest	2.5
July	34	28	40	South	2.8
August	33	27	39	Southwest	2.3
September	31	24	38	Southwest	2.2
October	26	21	33	Northeast	1.9
November	21	15	28	East	1.1
December	15	8	22	Northeast	1.5

NA = Not Available.

BEST AVAILABLE DOCUMENT

28

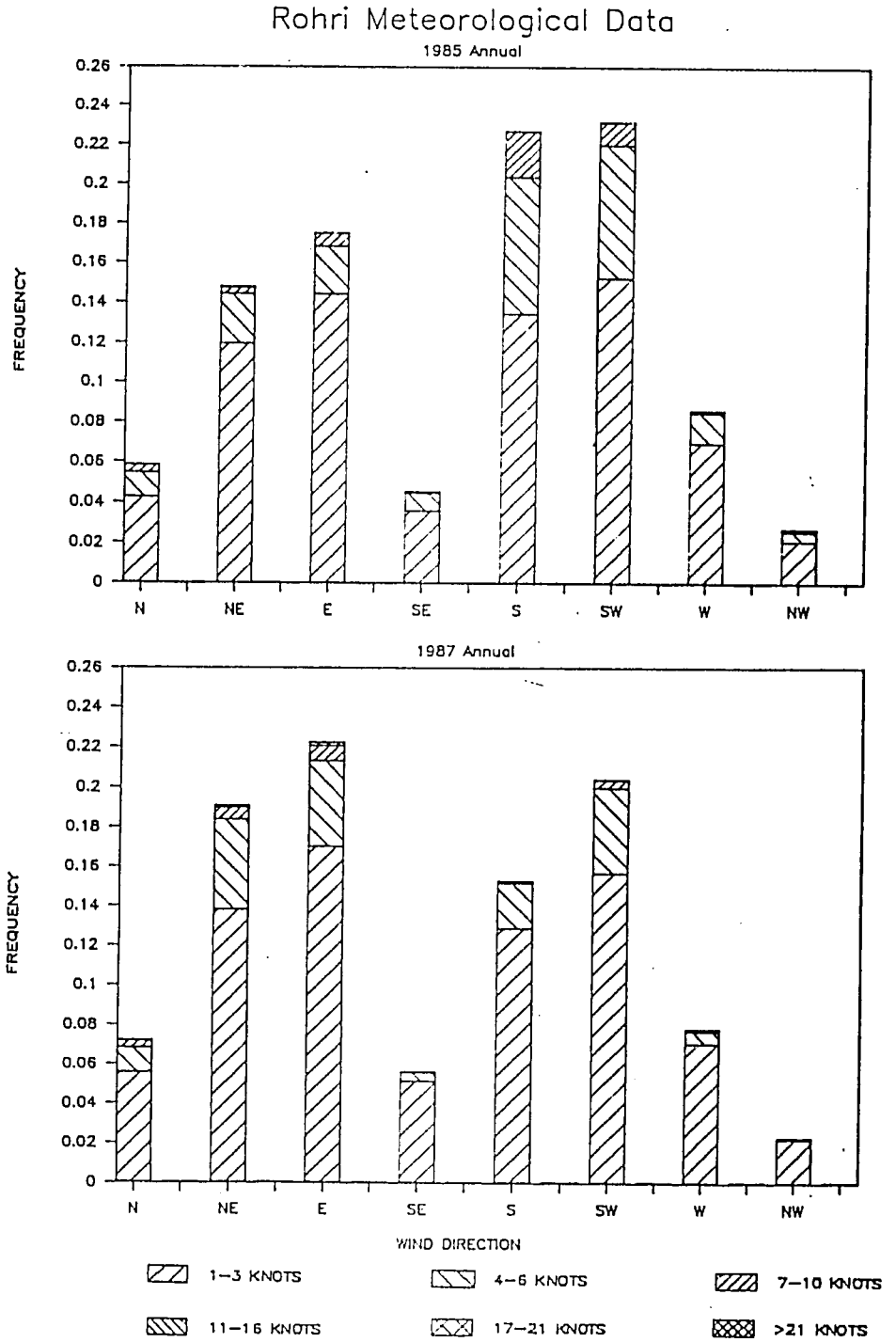

Figure 3.1-2. Wind Bars for Rohri, 1985 and 1987

KBN

BEST AVAILABLE DOCUMENT

January, when natural gas consumption by the private sector in Pakistan is high (i.e., during the winter months) and gas supplies to the Guddu plant are curtailed.

The existing GTCC units consist of four individual gas turbine units rated at 100 MW generating capacity each. Each turbine has a heat recovery steam generator, capable of supplying an additional 50 MW of electrical generating capacity. The total maximum generating capacity of the units is therefore 600 MW (150 MW x 4). The units can be operated in either the simple cycle mode (gas turbine only) or in the combined cycle mode (gas turbine with heat recovery steam generator). Normal operation is in the combined cycle mode. As primary fuel, the gas turbines burn natural gas from the Mari gas field, which is piped to the Guddu site. This fuel may be supplemented by natural gas from the Khandhkot gas field. Also, during natural gas curtailments in December and January, high speed distillate (HSD) oil is burned in the gas turbines. No supplemental fuel firing is conducted in the heat recovery steam generators.

A summary of operating parameters for the existing Guddu units is provided in Table 3.1-3. Characteristics of fuels burned at the Guddu power development are presented in Table 3.1-4.

Stack parameters associated with the existing Guddu units are shown in Table 3.1-5. Steam Units 1 and 2 share a common stack, and the stack parameters shown for Unit 1 reflect both units discharging from the common stack. Steam Units 3 and 4 also share a common stack.

Since the fuel type affects exhaust gas flow rates and velocities, figures are shown for both natural gas firing and fuel oil firing. Parameters are also presented for operation of the gas turbines in both the simple cycle mode and the combined cycle mode, since exhaust gas temperature, flow rate and velocity are all affected.

BEST AVAILABLE DOCUMENT

Table 3.1-3. Operating Parameters for Existing Guddu Units

Parameter	Units	Existing Steam Units: Unit 1 Czech	Unit 2 Czech	Unit 3 Russian	Unit 4 Chinese	Existing 600 MW GTCC Units* Each (SC)	Each (CC)
				(METRIC UNITS)			
Rating	MW	100	100	210	210	100	150
Heat Rate	Kcal/Kwhr	2,110	2,110	2,338	2,338	2,720	1,850
Heat Input	10^6 Kcal/hr	234	234	483	483		
Mari Gas	-	-	-	-	-	278	278
HSD Oil	-	-	-	-	-	241	241
Fuel Usage							
Sui Gas	Nm^3/hr	28,246	28,246	58,303	58,303	-	-
Khandhkot Gas	Nm^3/hr	-	-	-	-	-	-
Mari Gas	Nm^3/hr	-	-	-	-	43,271	43,271
HSD Oil	Kg/hr	-	-	-	-	21,934	21,934
	l/hr	-	-	-	-	25,505	25,505
Furnace Oil	Kg/hr	23,210	23,210	47,907	47,907	-	-
	l/hr	23,684	23,684	48,885	48,885	-	-
				(ENGLISH UNITS)			
Rating	MW	100	100	210	210	100	150
Heat Rate	Btu/kwhr	8,373	8,373	9,278	9,278	10,794	7,341
Capacity Factor	-	75%	75%	100%	100%	90%	100%
Heat Input	10^6 Btu/hr	929	929	1,917	1,917	-	-
Mari Gas	-	-	-	-	-	1,103	1,103
HSD Oil	-	-	-	-	-	956	956
Fuel Usage							
Sui Gas	scfh	997,852	997,852	2,059,076	2,059,076	-	-
Khandhkot Gas	scfh	-	-	-	-	-	-
Mari Gas	scfh	-	-	-	-	1,527,701	1,527,701
HSD Oil	lb/hr	-	-	-	-	48,313	48,313
	gal/hr	-	-	-	-	6,805	6,805
Furnace Oil	lb/hr	51,145	51,145	105,538	105,538	-	-
	gal/hr	6,237	6,237	12,871	12,871	-	-

* Four identical gas turbines with heat recovery steam generators.

Notes: SC - Simple Cycle Operation
CC - Combined Cycle Operation (normal operation)

Sources: Gibbs & Hill, 1988
KBN, 1988

BEST AVAILABLE DOCUMENT

Table 3.1-4. Characteristics of Fuels Burned at Guddu Power Development

Parameter	Units	Sui Gas	Kandhkot Gas	Mari Gas	High Speed Distillate Oil	Furnace Oil
Hydrocarbons	% Vol.	90.0	81.8	71.4	-	-
Nitrogen	% Vol.	2.5	16.6	19.5	-	-
Ash	% Wt.	-	-	-	0.01	-
Sulfur	gr/100 ft^3	96	32	0.1	-	-
	% wt	-	-	-	1.0 (max)	3.0 (max)
Density	lb/gal	-	-	-	7.1	8.2
	kg/l	-	-	-	0.86	0.98
Higher Heating Value	KJ/Nm^3	34,682	32,149	26,897	-	-
	Btu/scf	931	863	722	-	-
	Kcal/kg	-	-	-	10,988	10,082
	Btu/lb	-	-	-	19,797	18,164

Sources: Gibbs & Hill, 1988
KBN, 1988

BEST AVAILABLE DOCUMENT

32

Table 3.1-5. Summary of Stack Parameters for Existing Guddu Units

Parameter	Units	Existing Steam Units: Unit 1 Czech 100 MW	Unit 2 Czech 100 MW	Unit 3 Russian 210 MW	Unit 4 Chinese 210 MW	Existing 600 MW GTCC Units: Each (SC)	Each (CC)
(METRIC UNITS)							
Height	m	50	*	100	*	21.3	21.3
Area	m^2	32.17	*	25.52	*	40.8	24.2
Temperature	°C	150	*	140	*	536	183
Flow rate - Gas	Kg/s	-	*	-	*	381.6	381.6
- Oil	Kg/s	-	*	-	*	377.4	377.4
- Gas	m^3/s	305.6	*	618.2	*	889.0	500.9
- Oil	m^3/s	260.5	*	526.9	*	871.1	490.9
Velocity - Gas	m/s	9.50	*	24.2	*	21.80	20.74
- Oil	m/s	8.10	*	20.6	*	21.36	20.32
(ENGLISH UNITS)							
Height	ft	164	*	328	*	70	70
Area	ft^2	346	*	275	*	439	260
Temperature	°F	300	*	285	*	997	361
Flow rate - Gas	acfm	647,500	*	1,309,800	*	1,883,633	1,061,402
- Oil	acfm	551,907	*	1,116,386	*	1,845,797	1,040,082
Velocity - Gas	fps	31.2	*	79.4	*	71.51	68.04
- Oil	fps	26.6	*	67.7	*	70.08	66.67

* Units 1 and 2 share common stack; Units 3 and 4 share common stack

Notes: SC - simple cycle operation
CC - combined cycle operation (normal operation)

Sources: Gibbs & Hill, 1988
KBN, 1988

BEST AVAILABLE DOCUMENT

Locations of the existing Guddu units within the power development are shown in Figure 3.1-3. Location of the units relative to the Steam Units 3 and 4 stack location are also given in Table 3.1-5.

Air pollutant emission rates associated with the existing Guddu units are presented in Table 3.1-6. Emissions are presented for each unit for both natural gas firing and fuel oil firing, since emission rates are affected by the type of fuel burned. Emission rates are the same for gas turbine operation in either the simple cycle or combined cycle modes.

The air pollutant emission rates and stack parameters presented in this section for the existing Guddu units will be used in the air quality modeling analysis to predict existing and future ambient air quality levels in the Guddu area.

There are no other significant air pollution sources in the vicinity of the Guddu power development. There are no other power plants or industrial plants located in the region. The surrounding area is agricultural in nature. Other sources of air emissions include vehicular traffic over unpaved roads, agricultural burning, and wood burning in homes. These sources emit primarily particulate matter, and would contribute to the general background particulate concentrations in the area.

3.1.1.4 Ambient Air Quality

Background Concentrations

Measurements of existing ambient concentrations in the vicinity of the Guddu power development were taken, primarily to establish background concentration levels. Because there are no other significant sources of atmospheric pollution in the region, background levels for most pollutants were expected to be low. This was confirmed by the ambient sampling. Measurements of sulfur dioxide (SO_2), nitrogen dioxide (NO_2), carbon monoxide (CO) and ozone (O_3) were conducted at two locations at Guddu. One location was on the power plant site, while the second was at the WAPDA guest house, located about 1 km west of the existing gas turbine combined cycle units. Sensidyne, Inc., detector tubes were used for the sampling. The range and lower limit of detection of the detector tubes are as follows:

BEST AVAILABLE DOCUMENT

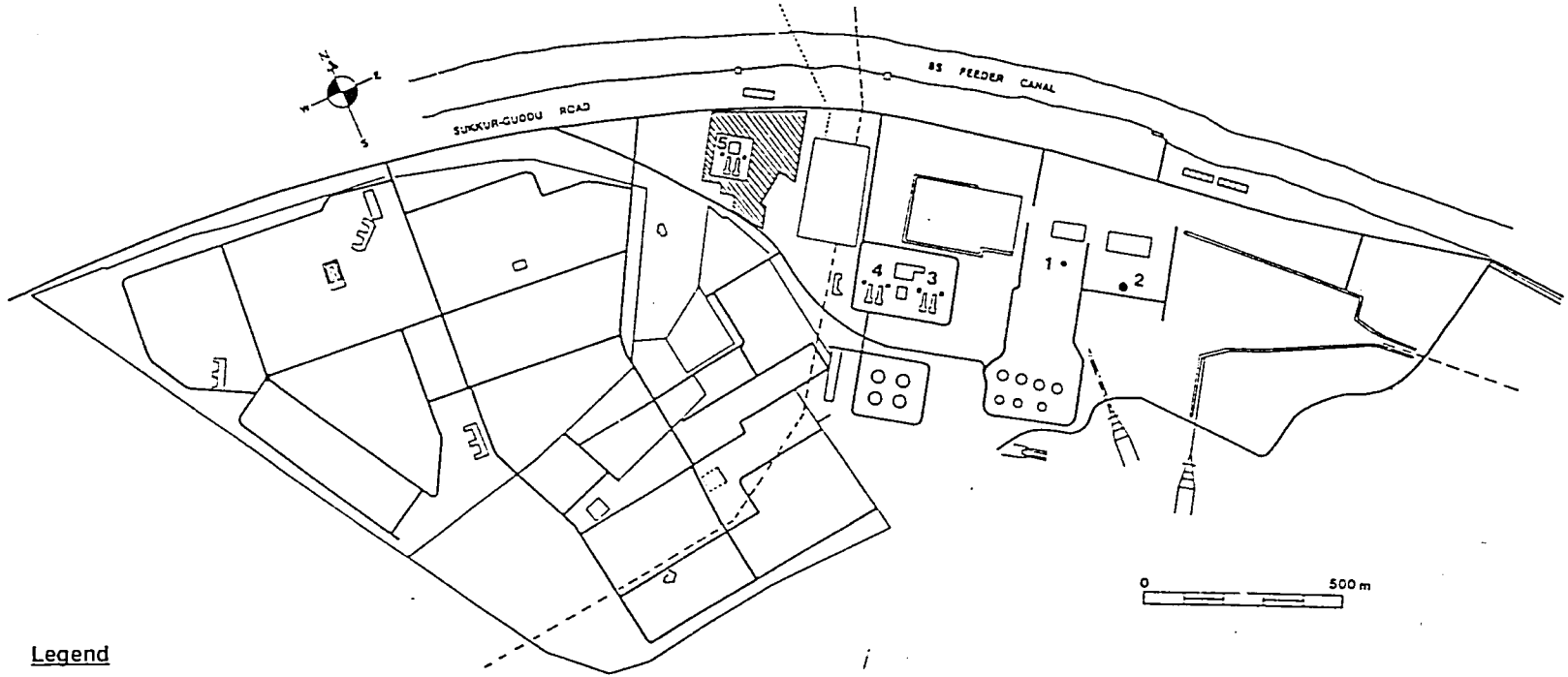

Legend

1 Steam Units 1, 2 Stacks
2 Steam Units 3, 4 Stacks
3 GTCC Units 1, 2 Stacks
4 GTCC Units 3, 4 Stacks
5 Proposed GTCC Units 5, 6 Stacks

Figure 3.1-3. Location of Existing and Proposed Guddu Air Emission Sources.

KBN

BEST AVAILABLE DOCUMENT

35

Table 3.1-6. Air Pollutant Emission Rates for Existing Guddu Units

Parameter	Units	Existing Steam Units				Existing 600 MW GTCC Units	
		Unit 1 Czech	Unit 2 Czech	Unit 3 Russian	Unit 4 Chinese	Each (SC)	Each (CC)
				(METRIC UNITS)			
Gas Firing							
Particulates	g/s	0.39	0.39	0.81	0.81	0.63	0.63
Sulfur Dioxide	g/s	34.5	34.5	71.2	71.2	0.05	0.05
Carbon Monoxide	g/s	5.0	5.0	10.4	10.4	3.50	3.50
Nitrogen Oxide	g/s	69.0	69.0	142.5	142.5	91.6	91.6
Vol. Org. Compds	g/s	0.18	0.18	0.37	0.37	0.48	0.48
Oil Firing							
Particulates	g/s	27.2	27.2	56.1	56.1	1.26	1.26
Sulfur Dioxide	g/s	370.1	370.1	763.8	763.8	121.7	121.7
Carbon Monoxide	g/s	3.93	3.93	8.11	8.11	3.47	3.47
Nitrogen Oxide	g/s	52.7	52.7	108.7	108.7	142.9	142.9
Vol. Org. Compds	g/s	0.82	0.82	1.69	1.69	1.40	1.40
				(ENGLISH UNITS)			
Gas Firing							
Particulates	lb/hr	3.1	3.1	6.4	6.4	5	5
Sulfur Dioxide	lb/hr	273.7	273.7	564.8	564.8	0.44	0.44
Carbon Monoxide	lb/hr	39.9	39.9	82.3	82.3	3.47	3.47
Nitrogen Oxide	lb/hr	548	548	1,131	1,131	727	727
Vol. Org. Compds	lb/hr	1.4	1.4	3.0	3.0	3.85	3.85
Oil Firing							
Particulates	lb/hr	215.6	215.6	445	445	10	10
Sulfur Dioxide	lb/hr	2,938	2,938	6,062	6,062	966	966
Carbon Monoxide	lb/hr	31.2	31.2	64.4	64.4	27.5	27.5
Nitrogen Oxide	lb/hr	417.9	417.9	862.4	862.4	1,134	1,134
Vol. Org. Compds	lb/hr	6.5	6.5	13.4	13.4	11.1	11.1

Notes: SC - Simple cycle operation
CC - Combined cycle operation (normal operation)

BEST AVAILABLE DOCUMENT

Pollutant	Range (ppm)	Range (ug/m^3)
Sulfur Dioxide	0.05 - 10	130 - 26,200
Nitrogen Dioxide	0.1 - 100	190 - 188,100
Carbon Monoxide	5 - 50	5,750 - 57,500
Ozone	0.05 - 3	100 - 5,900

The detector tubes were operated to obtain readings at the lower end of the measurement range. However, all readings for each pollutant were below the lower limit of detection of the measurement method. These findings confirm that background concentration levels in the area are low.

Measurements for total suspended particulate matter (TSP) were not conducted at the Guddu site. However, long-term TSP sampling has been conducted at the Lakhra and Jamshoro power plant sites located northwest of Hyderabad. The Lakhra site, located about 340 km southwest of Guddu, is very similar in nature to the Guddu area, being dry and arid, and no significant point sources of particulate matter are located nearby. As a result, background TSP levels in the Guddu area are expected to be similar to those experienced at Lakhra.

A summary of the long-term TSP data collected at Lakhra is presented in Table 3.1-7. The data indicate that background TSP levels average about 200 ug/m^3. This 200 ug/m^3 concentration was used as a background TSP concentration in the Guddu air quality impact assessment. The background concentration is added to impacts predicted from the emission sources considered in the air dispersion modeling analysis, in order to predict total air quality impacts.

Existing Baseline Air Quality Levels

Ambient air monitoring data for the Guddu site do not exist to define existing baseline air quality. However, atmospheric dispersion models can be used to estimate such baseline air quality. As a result, existing air quality levels in the area of the Guddu power development were estimated using atmospheric dispersion models. A description of the models utilized

BEST AVAILABLE DOCUMENT

37

Table 3.1-7. Summary of Total Suspended Particulate Matter Concentrations for Lakhra Monitoring Stations; May 1985 through September 1986

Site Location	Station Number	Number of Observations	Concentrations (ug/m^3)		
			Maximum	Minimum	Mean
Lakhra	L-1	23	553	35	180
	L-2	19	537	56	219

Note: $ug/m^3 = 10^{-6}\ g/m^3$.

Sources: WAPDA, 1985
ESE, 1986

BEST AVAILABLE DOCUMENT

38

in the baseline evaluation, data inputs to the model, and the modeling methodology employed are discussed in Section 4.1.1. As described in Section 3.1.1.3, the only existing air pollution emission sources at Guddu are four steam generating units and four GTCC generating units. These sources were modeled using the emission and stack data presented in Section 3.3.1.3. The data represent full load operating conditions on all units.

As described in Section 3.1.1.3, the generating units can burn both natural gas and fuel oil. Natural gas is the primary fuel burned in all generating units on a year-round basis. Significant emissions of NO_x occur when burning natural gas. In addition, the steam generating units burn primarily Sui gas, which is high in sulfur, and therefore can produce significant SO_2 emissions. As a result, predictions for NO_x and SO_2 were performed with all units burning natural gas during the entire year. Annual concentrations were predicted for NO_x, whereas both 24-hour and annual predictions were performed for SO_2. These averaging times are consistent with the World Bank Environmental Guidelines, which USAID has adopted for projects in Pakistan.

Fuel oil burning normally occurs during the months of December and January, and other periods of natural gas curtailment. Significant emissions of SO_2, NO_x and particulate matter occur under oil burning conditions. To provide an estimate of "worst case" impacts, SO_2 emissions and particulate emissions were evaluated for both short term and annual impacts during 100% fuel oil burning; however, NO_x impacts were not evaluated since only an annual standard exists for NO_x.

Results of the baseline dispersion modeling evaluation are presented in Table 3.1-8. World Bank guidelines are shown for comparison. The maximum predicted 24-hour SO_2 concentration is 325 ug/m^3, which is much lower than the World Bank guideline of 500 ug/m^3. This impact occurs under fuel oil burning conditions.

Maximum SO_2 impact under normal natural gas burning operation is predicted to be 23 ug/m^3 for the 24-hour averaging time, and 4 ug/m^3 for the annual averaging time. These maximum impacts are less than 10% of the World Bank guidelines.

BEST AVAILABLE DOCUMENT

Table 3.1-8. Predicted Maximum Ambient Concentrations due to Existing Sources at Guddu Power Development

Pollutant	Averaging Time	Maximum Predicted Concentration (ug/m^3)	World Bank Guideline (ug/m^3)
NATURAL GAS			
Sulfur Dioxide	24-hour	23	500
	Annual	4	100
Nitrogen Dioxide	Annual	11	100
OIL			
Sulfur Dioxide	24-hour	325	500
	Annual	54	100
Particulate Matter*	24-hour	23	500
	Annual	3.8	100
Nitrogen Dioxide	Annual	15	100

* Background concentrations for particulate matter are 200 ug/m^3.

BEST AVAILABLE DOCUMENT

40

Particulate matter impacts under normal natural gas burning operation are expected to be negligible due to the low emission rates when burning gas. Maximum particulate impact due to the generating units only, when burning fuel oil, is predicted to be 23 ug/m^3, 24-hour average. Added to the estimated background TSP concentration of 200 ug/m^3, total predicted maximum 24-hour average impact is 223 ug/m^3. This impact is about one-half of the World Bank guideline of 500 ug/m^3, 24-hour average.

The maximum annual NO_x impact due to the existing Guddu power development is predicted to be 11 ug/m^3. This maximum impact represents 11% of the World Bank guideline of 100 ug/m^3, annual average.

3.1.1.5 Noise Resources

A baseline noise monitoring program was conducted in the Guddu power development area in order to assess existing noise levels. Two measurement programs were carried out: a noise source survey, and an ambient noise survey. A Lucas CEL Instruments Ltd. Model CEL-228 impulse sound level meter was used to make the noise measurements. This is a Type 2 sound level meter which meets the minimum ANSI specifications for Type 2 general purpose meters. The noise meter was calibrated and adjusted appropriately prior to field sampling.

The most common unit of measuring and reporting sound pressure levels is the "decibel" (dB). Decibels are calculated as a logarithmic function of sound pressure level (SPL) in air to a reference effective pressure (Kinsler and Frey, 1967): $SPL = 20\log_{10} (P_e/P_o)$

where: P_e = measured effective pressure of the sound wave

P_o = reference effective pressure of 0.00002 $newton/m^2$

The actual pressure levels can be adjusted to better reflect the normal response of the human ear to sound. This is referred to as "A-weighted" sound pressure level (dBA). In terms of the decibel scale, a fourfold decrease in energy (due to each doubling of distance from the reference point) results in a 6 dBA decrease in sound pressure level.

BEST AVAILABLE DOCUMENT

NOISE SOURCE SURVEY

In the noise source survey, noise measurements of specific noise sources within the existing power plant complex were made. The results of the source monitoring are presented in Table 3.1-9. Measurements of noise sources were made at specific locations inside buildings, to monitor worker exposure, and outdoors, to monitor both worker exposure and outdoor sound power levels. The outdoor sound power levels are to be used to assess the effects of noise sources on community sound levels.

The majority of measurements were made at a distance of 5 feet (1.5 m) from the source, in order to measure the sound power level of the source. Additional measurements were obtained at intermediate locations between two or more noise sources, the purpose being to measure sound levels to which workers are routinely exposed.

As indicated in Table 3.1-10, the loudest outdoor noise source found from the survey was the Russian gas reducing station, which measured 109 decibels A-weighted (dBA). The Combine Cycle power plant Unit 4 gas turbine exhaust duct and gas mixing plant each registered levels of 102 dBA. A reading of 102 dBA was also obtained inside the Steam Units 1 and 2 turbine room. Other high noise level sources included the Chinese gas reducing station and inside the pump house for the existing Steam Units. The World Bank (1984b), in its Occupational Safety and Health Guidelines, recommends that workers not be exposed to noise levels in excess of 90 dBA.

A special survey of noise levels associated with the heat recovery steam generators (HRSGs) in the Combined Cycle power plant was also undertaken. This survey was performed in response to concern by staff personnel over a cyclic, resonating noise, apparent at high load levels, originating from the HRSGs. Several measurements were obtained at various distances from the HRSGs, including inside the Gibbs & Hill site construction offices. Frequency measurements were also obtained.

The results of the special noise survey monitoring are presented in Table 3.1-10. The results indicate the greatest sound level to be in the 125 Hz frequency band, where the noise level was measured at 92 to 97 dB.

Table 3.1-9. Results of Survey of Noise Sources at Guddu Power Development

Noise Source	Distance From Source (ft)*	Noise Level dBA
450/600 MW Combined Cycle Plant		
Unit 4 Power Block	5	84
Unit 4 HRSG	5	80
Between Unit 3 and Unit 4 HRSGS, 10 ft. from Unit 4 HRSG	10	84
Unit 4 Gas Turbine Exhaust Duct	5	98
Unit 4 Gas Turbine Exhaust Duct - Unit 3 Side	5	102
Between Unit 3 & 4 Gas Turbines	30	92
Between Unit 3 & 4 Gas Turbines - Filter House End	30	85
Steam Turbine Building	5	79
Inside Turbine Building		
-Boiler Feed Pumps	5	93
-Hydraulic Unit	5	89
-Turbine (2nd Floor)	5	92
-Turbine Room (3rd Floor)	5	94
Gas Mixing Plant	10	102
Control Building - Invertor Room (Invertor)	5	80
Pump House		
-Inside	5	89
-Outside	5	79
Existing Steam Units		
Units 1, 2		
-Inside Turbine Building	5	92
-Outside Building	5	85
-Turbine Room	5	95-102

Table 3.1-9. Results of Survey of Noise Sources at Guddu Power Development (Page 2 of 2)

Noise Source	Distance From Source (ft)*	Noise Level dBA
Units 3, 4		
-Outside Turbine Building	5	85
-Pump House (Inside)	5	99
-Sui Gas Mixing Plant		
-Filters	5	91
-Russian Gas Reducing Station	5	109
-Chinese Gas Reducing Station	5	98

* English to Metric:

5 ft - 1.5 meters (m)
10 ft - 3.0 m
30 ft - 9.1 m

44

ble 3.1-10. Results of Special Noise Survey of 450/600 MW Combined Cycle Plant HRSGS

urce/Location	Noise Level, dB								
		Frequency (HZ)							
	A Scale	63	125	250	500	1K	2K	4K	8K
& H Site Construction Office									
1) Inside conference room at table	57-64	65-74	74-82	55-59	51-54	39-43	34-36	32-34	
2) At window	72-77	82-87	92-96	66-69	51-55	45-47	41-44	41-43	<30
3) Outside, adjacent to building	74-78								
dway Between ffice and Unit 4	77-81								
jacent to Unit 4 Gas Turbine	84	81-84	88-91	75-79	73-76	75-76	77	79	62
Adjacent to Unit 4 HRSG	80	87-90	92-97	74-77	70-72	70-73	69-71	69-71	57

45

Also of importance is the rather large fluctuations in noise levels measured at this frequency, varying by up to 5 dB. It has been recognized that a noise level which often fluctuates by 5 dB or more is more noticeable and bothersome than a steady noise of the same average sound level. This then could be the cause of the complaints associated with this noise source.

AMBIENT NOISE SURVEY

A survey of ambient noise levels in the Guddu community was undertaken. Measurements were taken at fourteen (14) locations surrounding the power plant. Measurements were obtained at two different times at each location: between 8 pm and 9 pm on a weekday evening, and between 6 am and 7 am on a weekday morning. The weekday evening measurements are representative of relatively low activity levels in the community, whereas a good degree of activity is associated with the early morning measurements, as these were taken well after sunrise.

All efforts were made to obtain noise readings which were not unduly influenced by localized, non-continuous sources, such as vehicular traffic and conversations between local villagers. For the most part, this goal was accomplished. Measurement duration varied from 15 seconds up to 1 minute, until an average reading was determined.

The results of the community noise monitoring are presented in Table 3.1-11. For this survey, the evening noise measurements were considered representative of nighttime hours, and the morning measurements were considered representative of daytime noise levels. From these data, the equivalent 24-hour sound level [$L_{eq}(24)$] in dBA, and day-night average sound level (L_{dn}) in dBA were estimated for each monitoring site. These estimates are also shown in Table 3.1-11. The $L_{eq}(24)$ and L_{dn} sound levels were estimated for each site by assuming the morning measurement (L_d) was representative of sound levels existing during daytime, and the evening measurements (L_n) were representative of nighttime sound levels. The $L_{eq}(24)$ and L_{dn} are then given by the following formulas [all sound levels in dB(A)]:

$$L_{eq}(24) = \frac{L_d + L_n}{2}$$

Table 3.1-11. Results of Guddu Ambient Noise Survey

Site No.	Site Description	Measured (dBA) 4/20/88 Evening 8pm-9pm	Measured (dBA) 4/21/88 Morning 6am-7am	Calculated (dBA) L_{eq} (24) (dBA)	Calculated (dBA) L_{dn} (dBA)
1	Intersection of Sukkar-Guddu Road to Power House Rd.	57	-	57	63
2	100 m north of 300 MW expansion site	61	56	59	67
3	Sukkur - Guddu Rd., just southeast of 300 MW expansion site	61	56	59	67
4	450/600 MW combined cycle power plant pump house	67	57	62	73
5	Sukkur - Guddu Rd., at barrage	52	52	52	58
6	Southeast of existing steam plant, at 500 KV line tower	49	57	53	58
7	Village south of existing steam units	58	62	60	65
8	Plant property, south of power units	68	62	65	74
9	Workers village south of power development at 500 kV line	62-67	57	61	70
10	Workers village south of power development at 500 KV line	59	52	56	65
11	Workers village just west of combined cycle units	65-67	62	64	72
12	Workers colony west of power development	60	56	58	66
13	Gate of workers village northwest of power development	67-72	62-64	67	76
14	WAPDA Guest House	50	47	49	56

47

$$L_{dn} = 10 \log \frac{1}{24} \left[15 \times 10^{(Ld/10)} + 9 \times 10^{(Ln+10)/10}\right]$$

The estimated $L_{eq}(24)$ and L_{dn} noise levels for each monitoring site were plotted on a base map of the Guddu power development. From these plots, contours of noise levels were inferred based upon the measured noise levels and the locations of major noise sources. The only major noise source in the Guddu area is the power plant complex. The noise contours are presented in Figures 3.1-4 and 3.1-5.

The World Bank environmental noise guidelines specify an outdoor L_{dn} of 55 dBA for residential areas and hospitals, and an $L_{eq}(24)$ of 55 dBA for schools in order to protect the public against outdoor activity interference. As shown in Figure 3.1-4, the 55 dBA $L_{eq}(24)$ contour extends over most of the Guddu workers villages and over a portion of the Guddu residential area. There are no schools located within the area which exceed 55 dBA, but a school is currently planned for the workers' village located southwest of the power plant, and would be within the area exceeding the guideline. There is at least one mosque within the area exceeding 55 dBA; however, noise levels inside the mosque would be much lower due to attenuation from the building structure.

A larger area surrounding the power plant is estimated to exceed the 55 dBA L_{dn} guideline, set to protect outdoor residential areas and hospitals. There are no hospitals located within this area, but it encompasses much of the Guddu workers' villages and residential area (see Figure 3.1-5). It also includes residential areas located to the east along the Sukkur-Guddu road, to the southeast along the Indus River, and to the south, although this area is sparsely populated.

A guideline $L_{eq}(24)$ level of 70 dBA has been set to protect against hearing loss in all outside public and residential areas. As shown in Figure 3.1-4, all areas exceeding the 70 dBA level are confined to within the power plant boundaries.

4/8

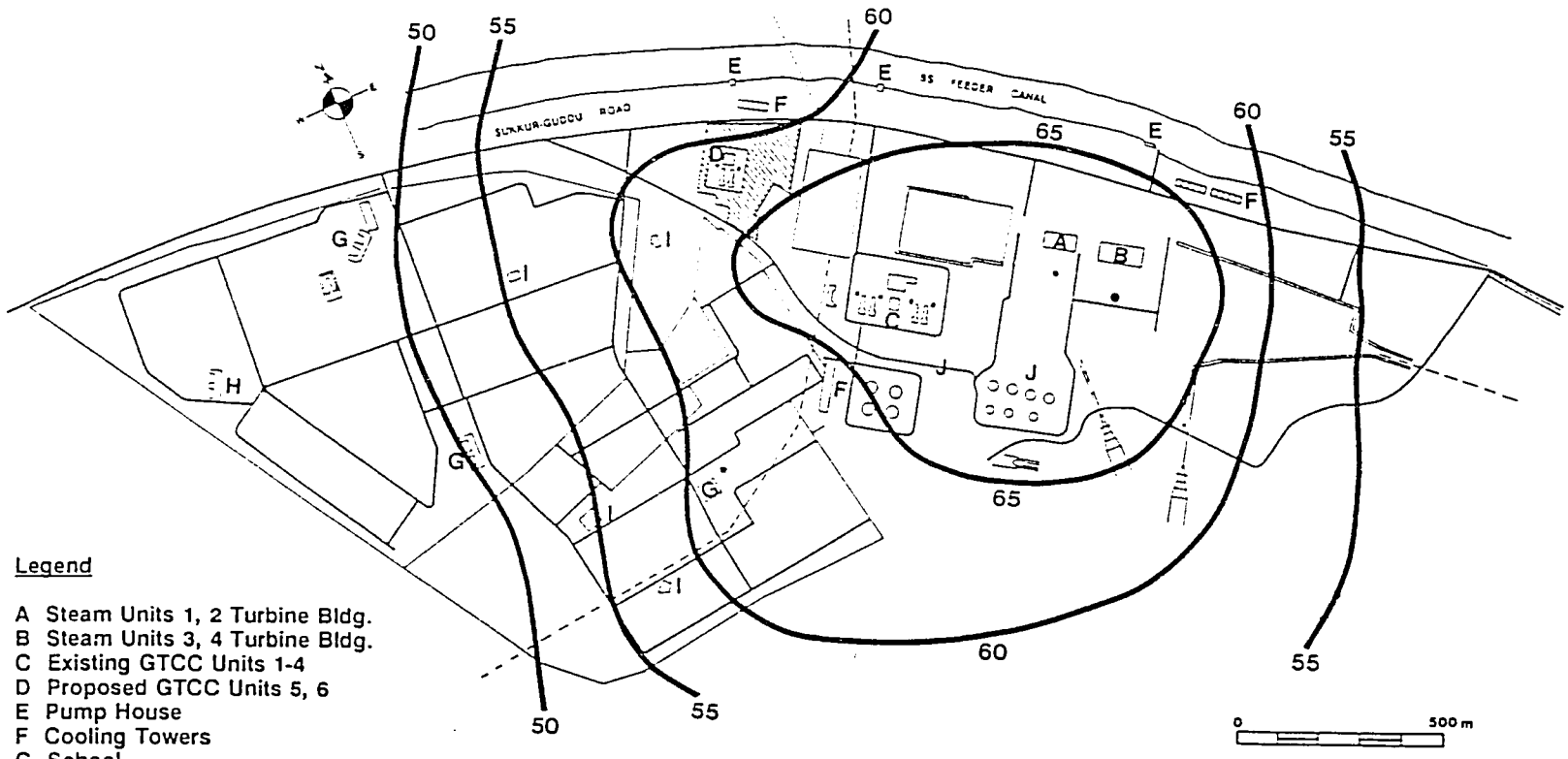

Legend

A Steam Units 1, 2 Turbine Bldg.
B Steam Units 3, 4 Turbine Bldg.
C Existing GTCC Units 1-4
D Proposed GTCC Units 5, 6
E Pump House
F Cooling Towers
G School
H Hospital
I Mosque
J Gas Mixing/Reducing Areas
— Existing 500 KV line
... Proposed 500 KV line
* Planned

Figure 3.1-4. Estimated Baseline L_{eq} (24) Noise Levels (dBA), Guddu Power Development

KBN

46

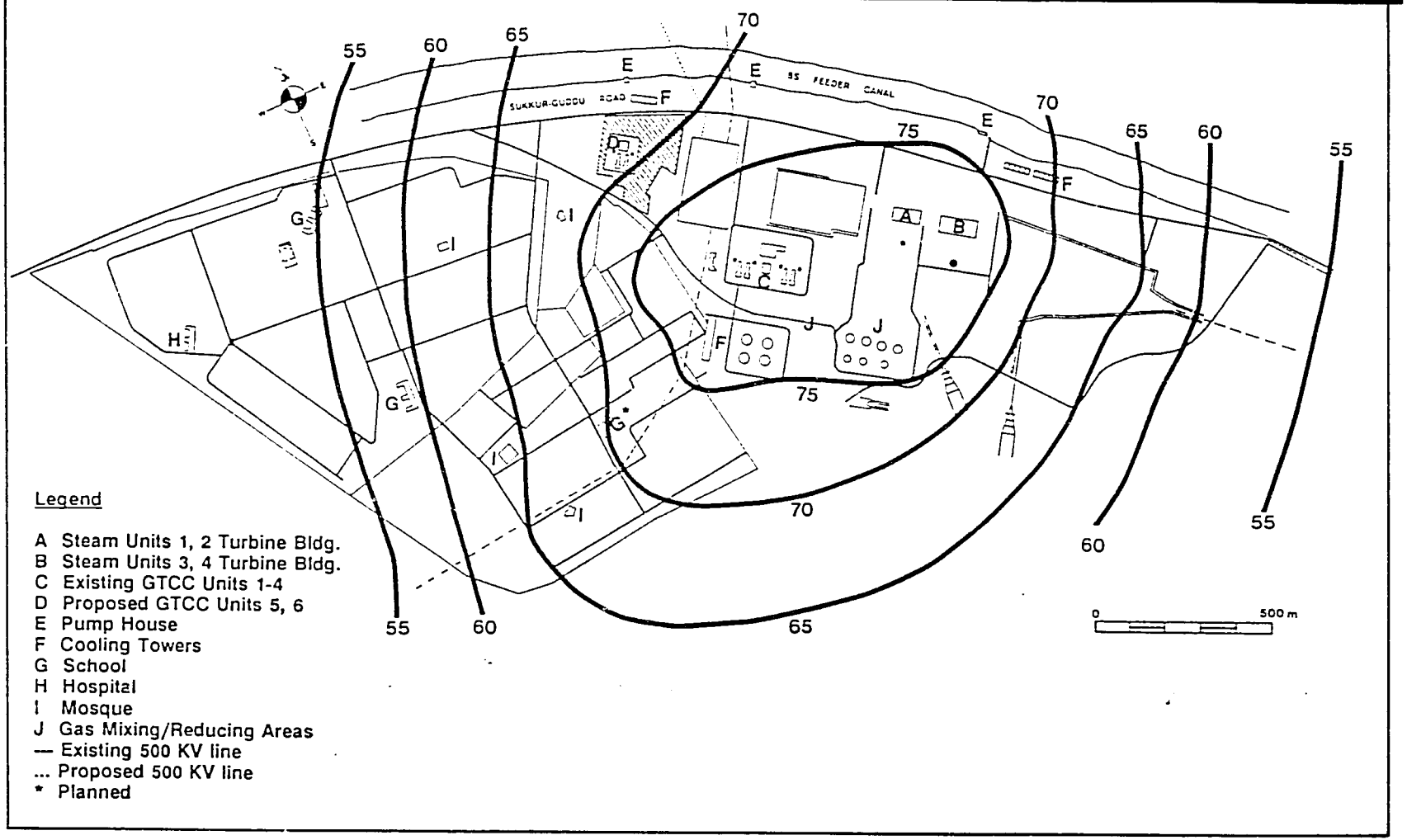

Figure 3.1-5. Estimated Baseline L_{dn} Noise Levels (dBA), Guddu Power Development

KBN

50

3.1.2 Land and Water Resources

3.1.2.1 Surface Water Resources

RAINFALL

Rainfall data, obtained from the Pakistan Meteorological Department offices in Karachi for Sukkur, were used to describe long-term conditions for the Guddu site. Data were available for the 24 year period, 1961 through 1984. Given the location and regional similarities, the Sukkur rainfall is representative of rainfall at Guddu.

Average monthly rainfall is summarized in Table 3.1-12. July and August are the wettest months, averaging 22.6 mm (0.89 inches) and 21.0 mm (0.83 inches), respectively. Rainfall during these two months account for approximately 51% of the total annual rainfall. November is the driest month receiving an average of 0.6 mm (0.02 inches) of rainfall.

The total annual rainfall for the 24 year period from 1961 through 1984 is summarized in Table 3.1-13. Annual rainfall discribution is dominated by extreme annual variations, varying from 2.5 mm (0.10 inches) in 1963 and 1965 to 412.1 mm (16.22 inches) in 1978.

These annual extremes significantly effect the variation is the mean and median rainfalls. The mean annual rainfall is 85.6 mm (3.37 inches); however, the median annual rainfall (i.e., that amount which could be expected in at least 50% of the years) is only 59.0 mm (2.32 inches). For design purposes, maximum daily rainfall has been estimated at 140 mm (5.5 inches). Although no return frequency was specified, it is generally believed by the design staff that this rainfall volume is in excess of a 100 year - 24 hour storm.

INDUS RIVER

The major surface water feature of the region is the Indus River; the Indus River is the major freshwater supply for agricultural, domestic and industrial uses in the region.

Table 3.1-12. Summary of Average Monthly Rainfall at Sukkur

Month	Average Rainfall (millimeters)	Average Rainfall (inches)
January	4.2	0.17
February	8.7	0.34
March	5.6	0.22
April	1.7	0.07
May	2.6	0.10
June	5.6	0.22
July	22.6	0.89
August	21	0.83
September	6	0.24
October	1.6	0.06
November	0.6	0.02
December	5.4	0.21
Annual	85.6	3.37

Note: Average monthly rainfall data are based on rainfall data collected at Sukkur for the period 1961 through 1984.

Source: Pakistan Meteorlogical Department, Karachi, 1988.

57

Table 3.1-13. Summary of Total Annual Rainfall at Sukkur

Year	Annual Rainfall (millimeters)	Annual Rainfall (inches)
1961	56.1	2.21
1962	71.2	2.80
1963	2.5	0.10
1964	93.4	3.68
1965	2.5	0.10
1966	39.4	1.55
1967	152.1	5.99
1968	29.2	1.15
1969	25.9	1.02
1970	25.4	1.00
1971	62.7	2.47
1972	42.6	1.68
1973	20.5	0.81
1974	44.4	1.75
1975	158.5	6.24
1976	191.8	7.55
1977	121.2	4.77
1978	412.1	16.22
1979	157.1	6.19
1980	59.0	2.32
1981	93.6	3.69
1982	59.0	2.32
1983	105.1	4.14
1984	28.5	1.12
Mean Annual Rainfall	85.6	3.37
Median Annual Rainfall	59.0	2.32

Source: Pakistan Meteorlogical Department, Karachi, 1988.

Indus River flow, in the project area, is controlled by the Guddu barrage. The function of this barrage is to create a large reservoir to provide water supply for irrigation of adjacent and downstream agricultural lands. The Guddu Barrage and other Barrages on the Indus River system have proven very effective in allowing the retention and management of water for dry season.

Water diverted from the barrage by large feeder canals upstream of barrage: the B.F. Feeder Canal; the D.P. Feeder Canal; and the Ghotki Feeder Canal. Water from these feeder canals is used for agricultural supply and power plant supply. In addition to these diversions, water is continuously released from the barrage to the downstream reaches of the Indus River.

Indus River flow varies significantly during year. Indus River stream flow data for the period from April 1987 through March 1988 is presented in Figure 3.1-6. Detailed flow information is presented in Appendix A. Annual high flows typically occur in August. Annual low flows typically occur during December through March.

A summary of the observed annual maximum Indus River flows (upstream and downstream or into and out of the barrage) for the period from 1962 through 1987 are presented in Table 3.1-14. Maximum observed discharge from barrage was 33,309 meter^3/sec (1,176,150 feet^3/sec) on August 15, 1976. Average annual maximum discharge from the barrage is 18,363 meter^3/sec (648,400 feet^3/sec).

A summary of the observed annual minimum Indus River flows (upstream and downstream or into and out of the barrage) for the period from 1963 through 1987 are presented in Table 3.1-15. Minimum observed discharge from barrage was 85 meter^3/sec (3000 feet^3/sec) on December 27, 1969. Average annual minimum discharge from the barrage is 428 meter^3/sec (15,123 feet^3/sec).

A summary of the observed annual maximum Indus River flood elevations, upstream and downstream of the barrage, for the period from 1963 through 1987 are presented in Table 3.1-16. The maximum observed flood elevation upstream of the barrage was 79.21 meters MSL (259.90 feet MSL) on

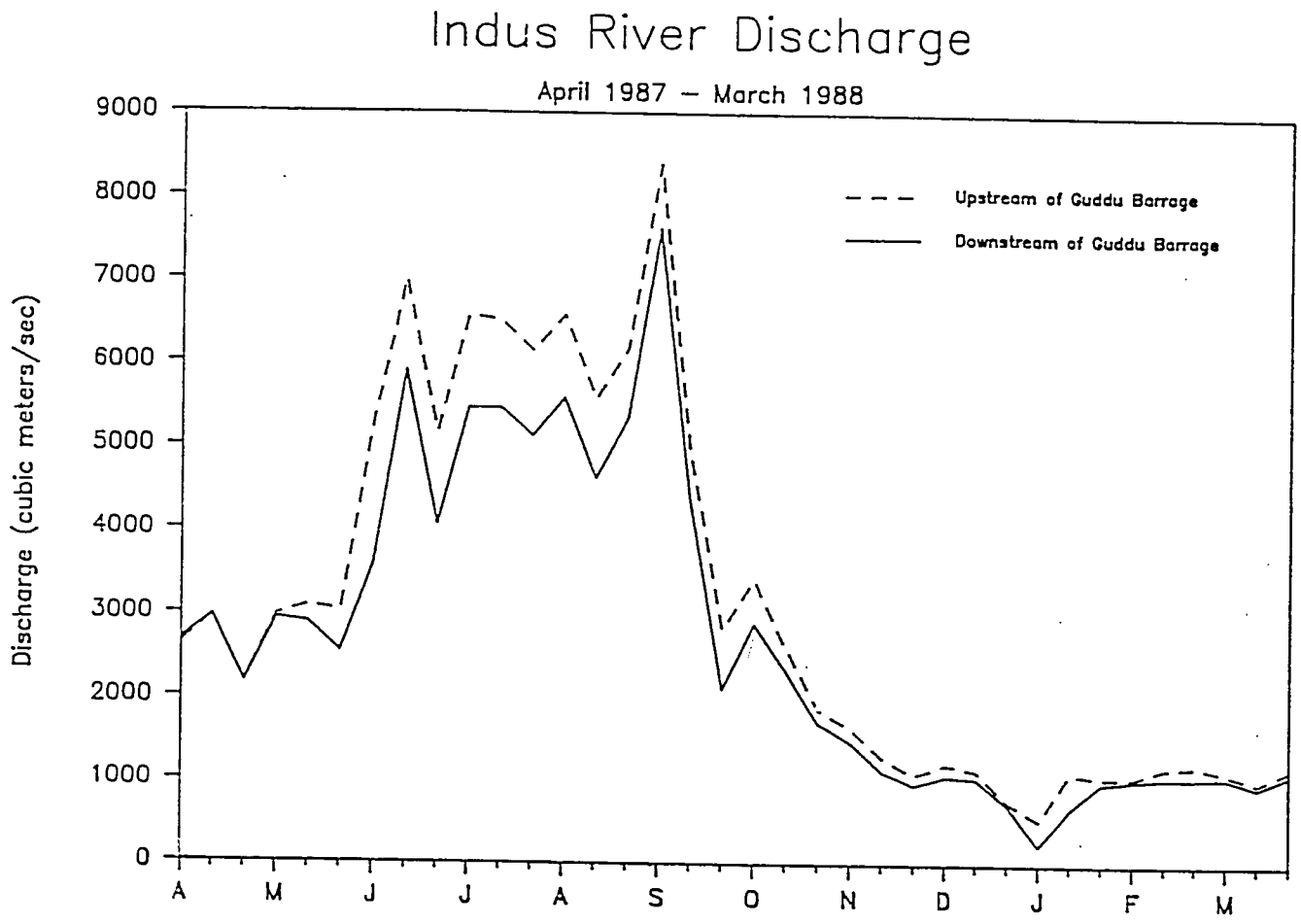

Figure 3.1-6. Indus River Discharge, April 1987 - March 1988

KBN

55

Table 3.1-14. Summary of Observed Maximum Annual Discharges of the Indus River, Upstream and Downstream of the Guddu Barrage for 1962 through 1987 (26 years)

Date	Maximum Annual Discharge Upstream of Guddu Barrage		Maximum Annual Discharge Downstream of Guddu Barrage	
	(m^3/sec)	(ft^3/sec)	(m^3/sec)	(ft^3/sec)
26-Aug-62	12,515	441,908	12,054	425,640
19-Aug-63	15,549	549,027	14,863	524,818
29-Aug-64	20,775	733,552	20,101	709,756
04-Aug-65	17,001	600,302	16,184	571,474
16-Aug-66	17,366	613,188	16,685	589,131
12-Aug-67	19,192	677,657	19,288	681,064
21-Aug-68	18,449	651,447	17,751	626,797
20-Aug-69	19,349	683,212	18,505	653,416
19-Aug-70	10,212	360,573	9,478	334,657
17-Aug-71	17,367	613,242	16,554	584,513
06-Jul-72	11,684	412,548	10,566	373,103
19-Aug-73	30,698	1,083,942	30,103	1,062,954
29-Jul-74	9,907	349,819	8,939	315,642
30-Aug-75	28,391	1,002,496	27,979	987,943
15-Aug-76	33,975	1,199,672	33,309	1,176,150
24-Jul-77	17,284	610,292	16,319	576,227
18-Aug-78	32,734	1,155,853	32,237	1,138,272
11-Aug-79	14,826	523,515	14,257	503,423
16-Aug-80	18,466	652,045	17,643	622,958
06-Aug-81	20,649	729,122	19,641	693,524
19-Aug-82	13,767	486,119	13,125	463,461
10-Sep-83	21,486	758,655	20,851	736,248
04-Sep-84	18,338	647,508	17,723	625,782
15-Aug-85	12,060	425,835	11,150	393,724
13-Aug-86	33,228	1,173,292	33,192	1,172,010
03-Sep-87	9,716	343,067	8,941	315,719
Average Annual Maximum Discharge	19,038	672,226	18,363	648,400

56

Table 3.1-15. Summary of Observed Minimum Annual Discharges of the Indus River, Upstream and Downstream of the Guddu Barrage for 1962 through 1987 (26 years)

Date	Minimum Annual Discharge Upstream of Guddu Barrage		Minimum Annual Discharge Downstream of Guddu Barrage	
	(m^3/sec)	(ft^3/sec)	(m^3/sec)	(ft^3/sec)
03-Mar-63	559	19,750	559	19,750
11-Mar-64	558	19,701	558	19,701
21-Jan-65	609	21,500	609	21,500
03-Feb-66	504	17,800	504	17,800
05-Jan-67	328	11,591	109	3,840
28-Dec-68	989	34,928	989	34,928
05-Jan-69	539	19,025	393	13,891
27-Dec-70	525	18,543	85	3,000
08-Mar-71	544	19,218	544	19,218
14-Jan-72	291	10,280	194	6,844
17-Feb-73	627	22,145	627	22,145
10-Feb-74	542	19,153	542	19,148
01-Jan-75	460	16,258	375	13,226
31-Dec-75	416	14,684	223	7,891
13-Jan-77	612	21,627	338	11,942
02-Jan-78	448	15,815	170	6,000
05-Jan-79	523	18,459	352	12,436
09-Jan-80	713	25,166	354	12,500
06-Jan-81	533	18,820	427	15,076
05-Jan-82	673	23,774	348	12,303
27-Dec-83	616	21,755	394	13,907
19-Feb-84	843	29,756	778	27,467
02-Apr-85	650	22,938	648	22,873
13-Jan-86	677	23,911	478	16,892
14-Jan-87	551	19,449	277	9,785
02-Jan-88	500	17,664	259	9,145
Average Annual Minimum Discharge	570	20,143	428	15,123

57

Table 3.1-16. Summary of Observed Maximum Annual Water Elevation of the Indus River, Upstream and Downstream of the Guddu Barrage for 1962 through 1987 (26 years)

Date	Maximum Annual Water Elevation Upstream of Barrage		Maximum Annual Water Elevation Downstream of Barrage	
	(meters MSL)	(feet MSL)	(meters MSL)	(feet MSL)
26-Aug-62	77.84	255.40	76.97	252.55
19-Aug-63	77.93	255.70	77.16	253.15
29-Aug-64	77.89	255.55	77.78	255.20
04-Aug-65	77.78	255.20	77.54	254.40
16-Aug-66	77.70	254.95	77.60	254.60
12-Aug-67	77.87	255.50	77.67	254.85
21-Aug-68	77.87	255.50	77.57	254.50
20-Aug-69	77.96	255.80	77.69	254.90
19-Aug-70	77.87	255.50	76.78	251.90
17-Aug-71	77.87	255.50	77.42	254.00
06-Jul-72	77.87	255.50	76.93	252.40
19-Aug-73	78.85	258.70	78.48	257.50
29-Jul-74	77.87	255.50	76.87	252.20
30-Aug-75	78.41	257.25	78.18	256.50
15-Aug-76	79.03	259.30	78.76	258.40
24-Jul-77	78.24	256.72	77.64	254.75
18-Aug-78	78.70	258.20	78.44	257.35
11-Aug-79	78.07	256.15	77.69	254.90
16-Aug-80	78.33	257.00	78.01	255.95
06-Aug-81	78.67	258.10	78.07	256.15
19-Aug-82	78.18	256.50	77.60	254.60
10-Sep-83	79.21	259.90	78.36	257.10
04-Sep-84	78.33	257.00	78.06	256.10
15-Aug-85	78.18	256.50	77.48	254.20
13-Aug-86	78.88	258.80	78.57	257.80
03-Sep-87	78.33	257.00	76.93	252.40

September 10, 1983. The maximum observed flood elevation downstream of the barrage was 78.76 meters MSL (258.40 feet MSL) on August 15, 1976.

Water is released for the Guddu Barrage into the three feeder canals; the rate of release into these canals varies during the year depending on the agricultural and industrial demand. Releases into the three feeder canals for the period from April 1987 through March 1988 are presented in Figure 3.1-7. Detailed flow information is presented in Appendix A. For the B.S. Feeder Canal (the canal adjacent to the existing power stations), annual high flows typically occur in July. Very little water is released to B.S. Feeder canal during December through March. A summary of the observed annual maximum releases and elevations in the B.S. Feeder Canal for the period from 1963 through 1987 are presented in Table 3.1-17.

The existing station and proposed expansion site is bounded by the B.F. Feeder Canal to the north and the Indus River (downstream of the Barrage) to the east. Both are protected by a flood protection and erosion prevention dike or bund. Along the B.F. Feeder Canal, this bund is maintained to an elevation of approximately 79 meters MSL (259.2 feet MSL). Along the Indus River (downstream of the Barrage), this bund is maintained to an elevation of approximately 80 meters MSL (262.5 feet MSL). Because of porous nature of the bund material, substantial seepage occurs during the flood season; therefore groundwater and surface water levels will rise behind the bunds.

EXISTING INDUSTRIAL USES

Major industrial users are four steam power units and existing combined cycle units. Water is withdrawn from B.S. feeder canal. Water uses in the existing units include once-through condenser cooling water, cooling tower makeup, plant service water and potable water. Estimates of existing water use rates for the existing steam power units and combined cycle units are presented in Table 3.1-18. Location of existing water withdrawal facilities are presented in Figure 2.4-1.

The primary water demand by the existing units is for condenser cooling. To satisfy this demand and to minimize the regional water supply impacts during

59

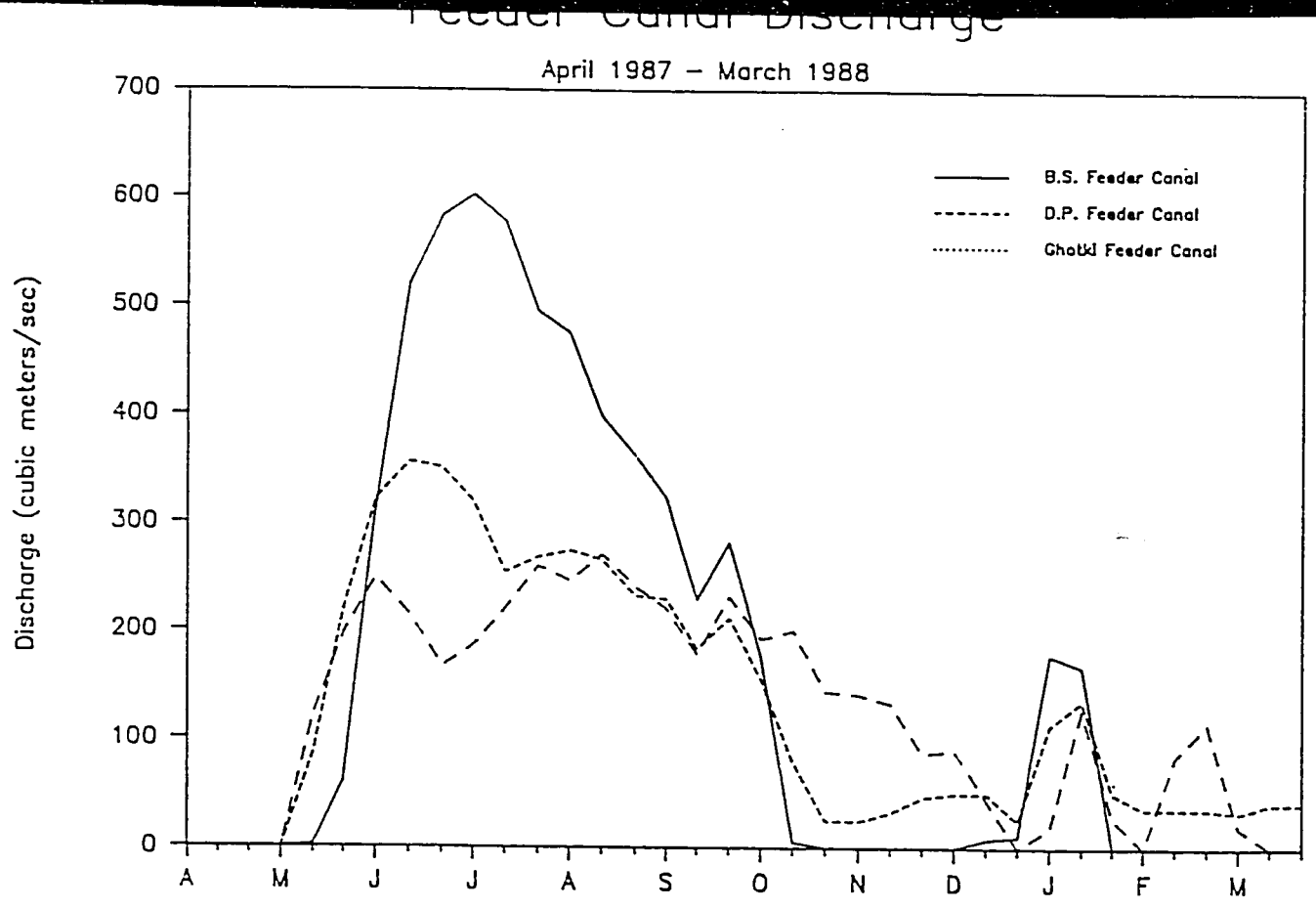

Figure 3.1-7. Feeder Canal Discharge April 1987 - March 1988

KBN

60

Table 3.1-17. Summary of Observed Maximum Annual Water Elevation and Discharge into B.S. Feeder Canal for 1962 through 1987 (26 years)

Date	Maximum Annual Discharge into the B.S. Feeder Canal		Maximum Annual Water Elevation of the B.S. Feeder Canal	
	(m^3/sec)	(ft^3/sec)	(meters MSL)	(feet MSL)
26-Jul-62	340	12,006	77.20	253.30
05-Jul-63	366	12,907	77.25	253.45
27-Jul-64	409	14,425	77.26	253.50
21-Jul-65	460	16,240	77.63	254.70
21-Jun-66	490	17,304	77.60	254.60
28-Jun-67	488	17,233	77.69	254.90
28-Jun-68	424	14,972	77.57	254.50
23-Jul-69	499	17,609	77.78	255.20
17-Jul-70	502	17,737	77.72	255.00
22-Jul-71	504	17,792	77.72	255.00
14-Jul-72	543	19,189	77.81	255.30
15-Jul-73	511	18,027	77.75	255.10
24-Jul-74	566	19,996	77.72	255.00
11-Jul-75	606	21,394	78.10	256.25
07-Jul-76	578	20,418	78.02	256.00
15-Jul-77	560	19,762	78.02	256.00
07-Jul-78	586	20,678	78.02	256.00
10-Jul-79	625	22,065	78.12	256.30
10-Jul-80	622	21,964	78.18	256.50
10-Jul-81	587	20,711	77.96	255.80
16-Jul-82	577	20,390	78.18	256.50
03-Jul-83	590	20,839	78.09	256.20
04-Jul-84	577	20,372	78.10	256.25
16-Jul-85	577	20,375	78.13	256.35
10-Jul-86	616	21,746	78.27	256.80
03-Jul-87	610	21,536	78.33	257.00

61

Table 3.1-18. Summary of Existing Industrial and Associated Potable Water Use (Page 1-Metric Units)

Water Use	Maximum Water Use (meters^3/min)				
	Thermal Units #1 and #2	Thermal Unit #3	Thermal Unit #4	Exisitng 450 MW GT/HRSG	Total
ONCE THROUGH COOLING OPERATIONAL SCENARIO					
Circulating Cooling Water	618	450	460	916	2,444
GT Cooling Water Pump	0	0	0	23	23
Plant Service Water	30	40	34	26	130
Subtotal - Industrial Uses	648	490	494	965	2,597
Plant and Colony Potable Water					6
Total Existing Station Water Demand - Once Thru Operations					2,603
COOLING TOWER OPERATIONAL SCENARIO					
Cooling Tower Makeup	9	7	7	14	37
GT Cooling Water Pump	0	0	0	23	23
Plant Service Water	30	40	34	26	130
Subtotal - Industrial Uses	39	47	41	63	190
Plant and Colony Potable Water					6
Total Existing Station Water Demand - Cooling Tower Operations					196

Note: 1. Cooling tower makeup volume calcualted as 1.5% of the total circulating water flow.

67

Table 3.1-18. Summary of Existing Industrial and Associated Potable Water Use (Page 2-English Units)

Water Use	Maximum Water Use (gallons/minute)				
	Thermal Units #1 and #2	Thermal Unit #3	Thermal Unit #4	450 MW GT/HRSG	Total
ONCE THROUGH COOLING OPERATIONAL SCENARIO					
Circulating Cooling Water	163,276	118,890	121,532	242,000	645,698
GT Cooling Water Pump	0	0	0	6,000	6,000
Plant Service Water	7,926	10,568	8,983	7,000	34,477
Subtotal - Industrial Uses	171,202	129,458	130,515	255,000	686,174
Plant and Colony Potable Water					1,500
Total Existing Station Water Demand - Once Through Cooling					687,674
COOLING TOWER OPERATIONAL SCENARIO					
Cooling Tower Makeup	2,449	1,783	1,823	3,630	9,685
GT Cooling Water Pump	0	0	0	6,000	6,000
Plant Service Water	7,926	10,568	8,983	7,000	34,477
Subtotal - Industrial Uses	10,375	12,351	10,806	16,630	50,162
Plant and Colony Potable Water					1,500
Total Existing Station Water Demand - Cooling Tower Operations					51,662

Note: 1. Cooling tower makeup volume calcualted as 1.5% of the total circulating water flow.

63

low flow conditions, all existing units have and utilize facilities for both once-through and cooling tower operation.

During the preponderance of the year, once-through condenser cooling water is withdrawn from the via the B.S. Feeder Canal (e.g., the Indus River upstream of the Guddu Barrage), used for once-through condenser cooling, and discharged downstream of the Guddu Barrage.

During critical low flow periods, cooling towers are utilized for condenser cooling. As noted in Table 3.1-18, the use of cooling towers for condenser cooling significantly reduces the total water demand.

EXISTING AGRICULTURAL USES

As previously discussed, the Guddu Barrage was designed and constructed to manage Indus River flow and provide nearly year-round irrigation supply. Flows released from Indus River into three feeder canals are dependent of water demand and crop practices for that season and year. Representative annual releases for the period from April 1987 through March 1988 have been presented previously in Figure 3.1-6.

For the period from 1962 through 1987, maximum water released to B.S. Feeder Canal was 625 meters^3/sec. (22,065 feet^3/sec.), to D.P. (Pat) Feeder Canal was 372 meters^3/sec. (13,147 feet^3/sec.), and to Ghotki Canal was 311 meters^3/sec. (10,986 feet^3/sec.). Maximum releases typically occur during July for the B.S. Feeder Canal and D.P. (Pat) Feeder Canal and during August for Ghotki Canal. During certain times of the year (e.g., during the April site visit), no water is released into feeder canals.

EXISTING WATER/WASTEWATER DISCHARGES

Estimates of existing wastewater discharge rates for the existing steam power units and combined cycle units are presented in Table 3.1-19. Locations of existing wastewater outfalls are shown in Figure 2.4-1.

All four steam units and existing combined cycle units discharge heated once-through cooling water downstream of the Guddu Barrage. Discharge is via a canal to the Indus River.

Table 3.1-19. Summary of Existing Industrial and Associated Sanitary Wastewater Discharges (Page 1-Metric Units)

Water Use	Maximum Wastewater Discharge (meters^3/min)				
	Thermal Units #1 and #2	Thermal Unit #3	Thermal Unit #4	Exisitng 450 MW GT/HRSG	Total
ONCE THROUGH COOLING OPERATIONAL SCENARIO					
Once-Through Circulating Cooling Water Discharge	618	450	460	916	2,444
Low Volume Wastes	30.0	10.0	10.0	11.4	61.4
Subtotal - Industrial Discharges	648	460	470	927	2,505
Plant and Colony Sanitary Wastewater					3.7
Total Existing Station Wastewater Discharge with Once Through Cooling Operations					2,509
COOLING TOWER OPERATIONAL SCENARIO					
Cooling Tower Blowdown	1.9	1.4	1.4	2.7	7.3
Low Volume Wastes	30.0	10.0	10.0	11.4	61.4
Subtotal - Industrial Discharges	31.9	11.4	11.4	14.1	68.7
Plant and Colony Sanitary Wastewater					3.7
Total Existing Station Wastewater Discharge with Cooling Tower Operations					72.4

Note: 1. Low volume wastes estimated as 50% of the total plant service water.
2. Colony wastewater estimated as 66% of the total colony and plant potable water.
3. Cooling tower blowdown calculated based on 5 cycles of concentration and blowdown volume equals 25 % of tower evaporative losses; therefore, blowdown volume will be 20% of tower makeup volume.

65

Table 3.1-19. Summary of Existing Industrial and Associated Sanitary Wastewater Discharges (Page 2-English Units)

Water Use	Maximum Wastewater Discharge (gallons/min)				
	Thermal Units #1 and #2	Thermal Unit #3	Thermal Unit #4	Exisitng 450 MW GT/HRSG	Total
ONCE THROUGH COOLING OPERATIONAL SCENARIO					
Once-Through Circulating Cooling Water Discharge	163,276	118,890	121,532	242,000	645,698
Low Volume Wastes	7,926	2,642	2,642	3,000	16,210
Subtotal - Industrial Discharges	171,202	121,532	124,174	245,000	661,908
Plant and Colony Sanitary Wastewater					990
Total Existing Station Wastewater Discharge with Once Through Cooling Operations					662,898
COOLING TOWER OPERATIONAL SCENARIO					
Cooling Tower Blowdown	490	357	365	726	1,937
Low Volume Wastes	7,926	2,642	2,642	3,000	16,210
Subtotal - Industrial Discharges	8,416	2,999	3,007	3,726	18,147
Plant and Colony Sanitary Wastewater					990
Total Existing Station Wastewater Discharge with Cooling Tower Operations					19,137

Note: 1. Low volume wastes estimated as 50% of the total plant service water.
2. Colony wastewater estimated as 66% of the total colony and plant potable water.
3. Cooling tower blowdown calculated based on 5 cycles of concentration and blowdown volume equals 25 % of tower evaporative losses; therefore, blowdown volume will be 20% of tower makeup volume.

66

During low flow periods for the existing combined cycle GT/HRSG units, once-through cooling water can be discharged (returned) to the B.S. Feeder Canal; however, recirculation of heated effluent compromises the usefulness of this option.

During cooling tower operation, all towers can blowdown to the discharge canal and Indus River below the Guddu Barrage. Cooling towers for several units (i.e., cooling towers for the steam electric Units 3 and 4, and the existing combined cycle units) can alternatively blowdown to the B.S. Feeder Canal.

All units discharge low volume plant wastewater and sanitary wastewater indirectly to the Indus River below the barrage. Water quality issues related to these discharges are summarized below.

WATER QUALITY

Water quality of the Indus River is highly dependent on river flow. Representative recent water quality data, collected in the B.S. Feeder Canal/Indus River are summarized in Table 3.1-20. Water quality from the Indus River at Sukkur Barrage (i.e., downstream of the Guddu Barrage) is presented in Table 3.1-21.

Typically, suspended solids and turbidity are lowest in December to February, and increases from March through October. Water mineralization (i.e., total dissolved solids) is generally low to moderate; pH is 7.0-8.5. Water temperature varies form 15°C to 37°C. For comparison, the World Health Organization (WHO) International water quality criteria for drinking water are listed in Table 3.1-22. For parameters for which chemical or physical data are available, the Indus River water meets the WHO drinking water quality criteria. Other than bacteriological contaminants and suspended solids (e.g., sediment), Indus River water is acceptable chemically for human consumption and agricultural uses. Bacteriological quality can be immproved by boiling or chemical disinfection prior to human consumption. Suspended sediments can be removed by settling prior to potable or agricultural use.

67

Table 3.1-20. Summary of Indus River/B.F. Feeder Canal Water Quality

Parameter	Units	13-Aug-87	18-Nov-87	13-Jan-88	20-Apr-87
P-Alkalinty	mval/L	0	0.18	0	0
P-Alkalinty	mg/L	0	9	0	0
M-Alkalinty	mval/L	2	2.5	2.7	2.6
M-Alkalinty	mg/L	100	125	135	130
Total Hardness	mval/L	2	2.5	2.7	2.6
Total Hardness	mg/L	100	125	135	130
Calcium Hardness	mval/L	1	1	2.2	1.5
Calcium Hardness	mg/L	50	50	110	75
Magnesium Hardness	mval/L	1	1.5	0.5	1.1
Magnesium Hardness	mg/L	50	75	25	55
Chloride	mval/L	0.25	0.2	0.6	0.5
Chloride	mg/L	9	7	21	18
Sulfate	mg/L	14	27	28	52
Silica (as SiO2)	mg/L	6	4.4	7	4.4
Iron	mg/L	0.16	0.275	0.5	0.24
pH	Units	8.1	8.3	7.4	8.2
Conductivity	umhos/cm	180	300	400	340
Total Suspended Solids	mg/L	1750	300	400	340
Total Dissolved Solids	mg/L	100	170	220	190
Total Solids	mg/L	1850	470	620	530
Chemical Oxygen Demand	mg O2/L	2.8	1.44	1.9	1.2

Note: 1. Alkalinity and hardness values expressed as mval/L or mg/L as CaCO3

2. No direct total dissolved solids (TDS) measurements were available. Therefore, TDS were estimated based on the empirical formula: TDS (mg/L) = 0.55 * Specific Conductance (umhos/cm).

Source: WADPA, 1988.

1,8

Table 3.1-21. Summary of Indus River Water Quality at Sukkur, Downstream of Guddu

Parameter	Units	Sukkur Barrage Center	Sukkur Barrage Left Bank	Sukkur Barrage Rice Canal	Sukkur Barrage Rohri Canal
pH	Units	7.1	7.2	7.2	7.2
Calcium	mg/L	38	30	32	31
Magnesium	mg/L	9	5	9	5
Sodium	mg/L	35	21	30	22
Potassium	mg/L	-	4	4.5	4.5
Bicarbonate	mg/L	146	134	146	159
Sulfate	mg/L	53	39	44	40
Chloride	mg/L	57	28	43	28
Total Dissolved Solids	mg/L	296	174	220	186
Fecal Coliforms	MPN/100 mL	11,000	-	-	-
Eijkman Test	-	+ve	-	-	-

Note: All water quality data, except bacterological data, collected October 2, 1984. Bacteriological data collected May 1984.

Table 3.1-22. World Health Organization International Drinking Water Criteria

Parameter	Units	Water Quality Criteria: Recommended	Water Quality Criteria: Maximum Permissable Levels
Arsenic	mg/L	--	0.05
Chloride	mg/L	200	600
Copper	mg/L	0.05	1.5
Fluoride	mg/L	--	0.6-1.7[a]
Iron	mg/L	0.1	1.0
Lead	mg/L	--	0.1
Magnesium	mg/L	--	150[b]
Manganese	mg/L	0.05	0.5
Mercury	mg/L	--	0.001
Sulfate	mg/L	200	400
Zinc	mg/L	5	15
TSD	mg/L	500	1500
Total hardness	mg/L $CaCO_3$	100	500
Selenium	mg/L	--	0.01
Color	mgPt/L	5	50
Turbidity	TU	5	25
pH		7.0-8.5	6.5-9.2
Coliform	org/100 mL	--	1
Foaming agents (MBAS)	mg/L	0.2	1.0

[a] Ambient temperature dependent.
[b] If sulfate <250 mg/L

Source: World Health Organization, 1971.

70

For the four existing steam units, the circulating water temperature increase is 8-10°C; for the HRSG units, the circulating water temperature increase is 7.5°C.

All units discharge low volume plant wastewater and sanitary wastewater to the Indus River below the barrage. Steam Units 1, 2, 3 and 4 discharge low volume wastes without treatment; a treatment (equalization and sedimentation) basin was constructed as part of steam Unit 3, but is not used. A sedimentation basin has been constructed as part of the existing combined cycle units and will be used for treatment of any low volume wastes generated by the units prior to discharge. Low volume wastewater is discharged to the circulating water return ditch. No water quality data is available for low volume wastes; however, no problems have been reported or observed.

Currently, wastewater from the WAPDA colony is collected by sewer and discharge to a series of off-site ponds. These ponds provide sedimentation, bacteriological decomposition and organic stabilization of sanitary wastewaters. If properly designed and operated, such facultative and maturation ponds are an appropriate and reasonable technology for the sanitary sewage treatment in this area.

Until recently, discharged sewage was not contained adequately by the ponds and flowed by gravity toward a nearby village. This resulted in surfacewater and groundwater contamination complaints by members of that village.

Improvement of the wastewater ponds and associated dikes have contained the direct surface discharge of sewage. However, due to the site topography in the immediate vicinity of the ponds, inadequately treated sewage still seeps out through the pond berms and indirectly enters the surfacewater course. Villagers still complain about the surfacewater and groundwater contamination (e.g., sewage smell from well water). The existing ponds are located outside of the 80 meter MSL flood protection bund which protects the existing site and colony, and therefore, are subject to routine (annual) flooding.

71

3.1.2.2 Geology, Physiography, Topography and Seismicity

Natural elevation of the site is about 77.0 to 76.0 meters MSL (252.6 to 249.4 feet MSL), sloping gently from north to south. The natural surface soil layers consist of thin alternating layers of silt and clayey silt, and combined, varied in thickness from 0.5 to 2.0 meters. Substantial disturbance in this layer due to local farming activity has occurred.

The existing, developed industrial site has been filled to an approximate elevation of 80 meters MSL (262.5 feet MSL). The thickness and density of this fill varies significantly across the site, reflecting the quality and limits of previous and ongoing fill work.

Beneath the surface fill material, natural alluvial river deposits can be expected to at least a depth of 30 meters (98 feet) (i.e., the full depth of a previous boring program). The underlying alluvial deposits are grouped into two general strata. The upper stratum consists primarily of loose silty fine sand and contains occasional layers of silt, particularly at the higher elevations. The thickness varies somewhat from location to location; however, the loose conditions generally persist for 6 to 9 meters, or about 70.0 meters MSL. Below the loose stratum a medium dense, medium to fine sand can be expected. This stratum occasionally contains zones of fine sand and less frequently very thin layers of fine gravel.

The site is located in Seismic Risk Zone 1 which corresponds with minor damage and Modified Mercalli Intensities between V and VI.

3.1.2.3 Groundwater Resources

Groundwater systems beneath the site are dominated by the layered nature of the alluvial material and the proximity to the Indus River and B.S. Feeder Canal.

Natural groundwater elevations in the vicinity of the existing and proposed site vary from elevation 74.75 meters MSL (245.3 feet MSL) during the winter months to elevation 76.50 meters MSL (251.0 feet MSL) during late summer and early fall. Higher elevations can be expected during severe flooding; lower elevations can be expected during severe droughts.

72

Generally, groundwaters are highly mineralized; ground water quality decreases (i.e., increases in mineralization) with increasing depth. Very shallow groundwaters will be of similar quality to waters of the Indus River and B.S. Feeder Canal. A summary of shallow ground water quality for a tube well near the existing combined cycle units is presented in Table 3.1-23. This well was reported to be approximately 46 meters (150 feet) in depth. Industrial uses of groundwater at existing power plant are limited due to problems associated with high mineralization. Groundwater is an alternative supply source for cooling tower make up during low flow/drought conditions.

3.2 ECOLOGICAL ENVIRONMENT

3.2.1 Existing Communities

3.2.1.1 Plant Site

There are no significant ecological communities on the plant site. The site is fully developed with the power plant, associated facilities, and worker colony area. What vegetation there on-site is ruderal with weedy species or with planted ornamental species. Acacia (Acacia nilotica) and other trees are planted on the plant site in the residential areas for shade purposes.

Wildlife of the plant site is dominated by dogs, various species of birds such as the house sparrow (Passer domesticus), and myna birds (Myna spp.); rodents such as mice (Mus musculus) and rats (Rattus spp.); and reptiles, such as geckoo (Hemidaetylus spp.), skinks (Mabuya spp.), all associated with the built environment.

3.2.1.2 Indus River

The ecological communities of the Indus River can be divided into the riverain communities along the Indus and the aquatic community of river itself. Remnants of riverain forest occur in the Indus River north and south of the Guddu Barrage. In their natural state, these communities include bhan or poplar (Populus euphractica), babul or acacia (Acacia nilotica) and mesquite (Prosopis cineraria). Acacia is the primary species followed by mesquite. Waterborn seeds of tamarix (Tamarix dioica, and T. articulata) and cane (Saccharum spp.) also occur in the riverain forests and

Table 3.1-23. Summary of Shallow Ground Water Quality at Guddu

Parameter	Units	Concentration
P-Alkalinty	mg/L	0
M-Alkalinty	mg/L	175
Total Hardness	mg/L	255
Calcium Hardness	mg/L	12
Magnesium Hardness	mg/L	105
Chloride	mg/L	48
Sulfate	mg/L	580
Silica (as SiO2)	mg/L	3.6
pH	Units	7.4
Conductivity	umhos/cm	1610

Note: Sample collected December 1987 for tube well near existing combined cycle units. Total tube well depth was reported to be approximately 46 meter (150 feet).

Source: WAPDA, 1988.

74

compete with the other species (Kharal, personal communication). Dense stand of cane are found along the river bank. Along the levees, tali or shisham (Dalbergia sissoo), is found. Irrigated agricultural areas occur in the floodplain on the eastside of the Indus River south of the Gohtki Feeder canal. An orchard (mangoes) is located just to the northeast of the plant site. Fish ponds are also found in the floodplain areas on the eastside of the Indus to the northwest. Two forest reserves, Ranuti and Gondak, occur south of the Guddu Barrage. These areas, managed by the Wildlife and Forestry Department, contain planted plantations of acacia. Harvesting of acacia was observed along the river north of the Guddu Barrage.

In the past the riverain forests were important habitat for the gavial (Gavialis gangeticus), crocodile (crocodylus palustris), otter (Lutra perspicillata), hog deer (Axis porcinus), python (Pyton molurus), Indian monitor lizard (Varanus bengalensis), fishing cat (Felis virerrina) and jungle cat (F. chaus). Because of the expansion of agriculture and forest plantations most of the riverain areas have been brought under cultivation, dried up or converted into managed forestry tracts and has resulted in a drastic decline of these species. In the Guddu area the gavial has been expurgated. The major wildlife habitats and typical species are presented in Table 3.2-1.

The Indus River is a turbid river that has been altered hydrologically and whose flows are controlled. However, several species of fish including palla or Indian Shad (Macrura ilisha), rohu or carp (Labeo rohita) and singari or catfish (Mysous seenghala), Khagga (Rita rita) along with the eel, thalia (Catla catla) occur in the river. These species are important human and wildlife food resources. The Indus dolphin, otter and other riverrain species depend upon these fish species. As the river level lowers, fish are trapped in ponds and small lakes. Numerous species of turtles including the hardshell turtle (Kachuga spp.), the crown turtle (Hardella thurgi), and several species of softshell turtles (Lissemys punctata, Chitra indica, and Trionyx gangeticus) can be seen along the banks of the river as well as the feeder canals. Besides turtles, wild boar (Sus scrofa) can be seen foraging along the river bank and within thickets of Saccharum spp. grasses, as observed during the April site visit.

175

Table 3.2-1. General Wildlife Habitats of Guddu Study Area

Habitat	Distribution	Typical Plant Species	Associated Wildlife
Indus Inundation Forests	Between the banks of the active river-bed and the floodplain banks of the riverain tract along the Indus River	Acacia nilotica, Prosopis cineraria, Populus euphratica Tamarix spp. and locally abundant clumps of Saccharum spontaneum and Saccharum bengalensa	Night Heron, Coucal, Red Munia, Black Partridge, Yellow Eyed Babbler, Jungle Cat, Hog Deer, Wild Boar, Marsh Crocodile, Monitor Lizard
Plains Irrigated Plantations		Dalbergia sissoo with or without Morus alba	Yellow Fronted Pied Woodpecker (in canal-side plantations), Sind Pied Woodpecker, Spotted Owlet, Jungle Cat, Wild Boar, Jackal, Foxes
Plains Irrigated Agriculture	Throughout the plains of Pakistan	Wheat, maize, millet, sorghum,	Yellow Fronted Pied Woodpecker, Spotted Owlet, The Little Brown Dove, Collared Turtle Dove, Black Partridge, Grey Partridge

Source: Modified from Beg, 1975.

76

The Indus River valley is one of the seven major migratory flyways for waterfowl breeding in Northern Eurasia. Known as the Indus Flyway the wetlands, rivers, canals, and ponds are important wintering areas for birds from the lake districts of southwestern Siberia and Kazarhstan. Approximately 75% of the waterfowl using the flyway in the winter (September to May) stay in Pakistan (Ahmed and Ghalib, 1986).

During the winter, the river and surrounding marshes support large populations of waterfowl including the pintail (Anus acuta), mallard (A. platyhrynchos), widgeon (A. penelopa), shoveller (A. clypeata), common pochard (Aythya ferina) and tufted duck (A. fuligula), and wading birds such as the common crane (Grus grus), grey heron (Ardea cinerea), and great white egrets (Egretta alba). Egrets, herons, cormorants, and gallinules were frequently seen along the borders of ponds, small lakes and marshes of the area. A number of ducks are endemic including the spotbill duck (Anas poecilorhyncha) and the cotton teal (Nettapus coromandelianus). These are found through the the year in the area. A marsh and small brackish lake is found 3 km east of the plant just south of the Gohtki Feeder canal. Hunting of water fowl occurs there during the winter.

3.2.2 Endangered Species

A number of endangered, threatened and vulnerable species occur in the study area (Table 3.2-2). None of these species are found on the plant site. These species are potentially found in off-site habitats such as the Indus River. The most prominent endangered species is the Indus dolphin (Platanista indi) which occurs on the south side of the Guddu Barrage. A Indus dolphin preserve occurs from the Guddu Barrage south to the Sukkur Barrage. Approximately 450 dolphin habitate in this stretch of the river. This population is considered the largest population in the Indus and the most viable. Dolphins congregate in small groups or schools of up to ten individuals. These schools generally stay in the same area. Several dolphin were seen feeding below the gates during the April visit. Dolphin are not known to enter the Gohtki Feeder canal which provides intake water for the power plants. They generally prefer the slow but regularly moving turbid water at least two to five meters in depth. They remain in the mainstream near the junction of rivers, and eroded banks (Ahmed, personal

Table 3.2-2. Endangered, Threatened and Vulnerable Species Potentially Occurring in the Study Area

Scientific Name	Common Name	Status	Potential Habitat/ Locality
BIRDS			
Anas poecilorhyncha	Spotbill Duck	Endangered-GOP	riverain areas-open water, migrant
Grus antigone	Sarus Crane	Endangered-GOP	riverain
Falco peragrinus	Perogrine Folcon	Vulnerable IUCN	Indus floodplain
MAMMALS			
Felis viverrina	Fishing Cat	Endangered-GOP	riverain area
Axis porcinus	Hog Deer	Endangered-GOP	riverain forest
Platanista indi	Indus Dolphin	Endangered-GOP Threatened-IUCN	Indus River
REPTILES			
Crocodylus palustris	Mugghr	Vulnerable-IUCN	Indus River canals, marshes
Gaxialis gangeticus	Gharial	Endangered or Extinct	Indus River, marshes
Python molurus	Indian Python	Vulnerable-IUCN	Indus floodplain
Trionyx gangeticus	Indian softshell turtle	Endangered-GOP, USA, IUCN	riverain area

Vulnerable - taxa believed to move into Endangered category in near future if causal factors continue operating.

Source: U.S Department of Interior, 1985.
Zoological Survey Department, 1986.
IUCN, 1986.

communication). They do breed in side channels. The dolphin is a fish eater with mali, singari, and maraka its primary food (Pilleri, 1980).

3.3 SOCIAL, CULTURAL, AND INSTITUTIONAL ENVIRONMENT

3.3.1 Socioeconomic Characteristics

3.3.1.1 Plant Site and Area

The Guddu Thermal Station is strategically located in an isolated, desert environment. It is situated on the right bank of the Indus River about twelve kilometers from Kashmore, a predominantly Hindu community west of Guddu. Guddu began as a small village along the asphalted road from Sukkur to Sadiqabad. It has increasingly gained importance since the construction of the Guddu Irrigation Barrage in 1963 which has continued since the construction of the central thermal combined cycle power station. The site is geographically situated in the center of Pakistan and equidistant from the Sind, Baluchistan and Punjab provincial boundaries. The area is naturally predisposed to power plant development in that there are ample freshwater supplies available from the Indus River through the Begari Sind, Pat Feeder, Ghotki canal network for cooling and plant service purposes. Moreover, the site's location relative to the Mari and Sui natural gas fields complement the siting strategy. Yet the effects of potential environmental and ecological hazards/catastrophes are greatly minimized by virtue of its remote location.

Skoda Export of Czechoslovakia, Technopromexport of the Soviet Union, a Chinese firm, and General Electric of the United States are the expatriates that have contributed construction and operational expertise of the power station. This expatriate involvement, acting in concert with WAPDA and GOP energy programmes, has transformed the Guddu landscape over the last two decades.

Planned infrastructural development has been systematically included within the physical plant area and its immediate surroundings since 1970. Living quarters, a merchants' district, a medical facility, schools, security system, transportation networks, and mosque are located within the Guddu power plant site. Goods and services, as well as people, are principally transported via the recently asphalted road running from Sukkur to

Sadiqabad. The basic services for all levels of socioeconomic strata are at least minimally met by WAPDA, Sind Province, and Jacobabad District. Large landowners and business/entrepreneurial contractors figure prominently into providing for the basic human needs of those at lower socioeconomic levels.

3.3.1.2 Demography

The population of Sind Province has increased nearly three times since the first population census of Pakistan in 1951. In 1981, the population was 19,029,000 compared to 6,048,000 in 1951, resulting in an increase of 215 percent [Population Census Organization (PCO, 1984a)]. The population of Punjab Province has more than doubled since the first population census. In 1981 it was 47,290,000 compared to 20,554,000 in 1951, resulting in a moderately high increase of 130 percent (PCO, 1984b). Baluchistan Province has quadrupled its population since the 1951 census. The population was 4,332,000 in 1981 compared to 1,167,000 in 1951, resulting in almost a 300 percent increase (PCO 1984c). The area, population, and density of Pakistan and the Sind, Punjab and Baluchistan are portrayed in Table 3.3-1.

The three districts within Sind province that are proximate to the Guddu Thermal Station are: Jacobabad, Sukkur, and Shikarpur. The area, population, density and household size within these districts are shown in Table 3.3-2.

There are two districts within Punjab province that are close to the thermal station: Dera Ghazi Khan and Rahim Yar Khan. The area, population, density and household size by districts within these districts are shown in Table 3.3-2.

There are two districts within Baluchistan province that are near to the thermal station: Kohlu Agency and Nasirabad. The area, population, density and household size for these districts are shown in Table 3.3-2

The population within about a five kilometer radius of the thermal station is about 15,000. This population is comprised of WAPDA employees and their families, construction workers under contract, irrigation construction and maintenance personnel, retailers in the bazaar area and the main street

able 3.3-1. Growth, Density and Distribution of Population

rovince	Area (sq km)	Population (in thousand)		Population Density		Urban Population (Percentage)		Annual Growth Rate (Percentage)	Household Size	
		1972	1981	1972	1981	1972	1981	1972-81	1972	1981
KISTAN	796,095 (100)	65,309 (100)	84,253 (100)	82	106	25.4	28.3	3.1	6.4	6.7
njab	205,344 (25.8)	37,610 (57.6)	47,292 (56.1)	183	230	24.4	27.5	2.7	6.4	6.4
nd	140,914 (17.7)	14,156 (21.7)	19,029 (22.6)	100	135	40.4	43.3	3.6	6.2	7.0
luchistan	347,190 (43.6)	2,429 (3.7)	4,332 (5.1)	7	12	16.5	15.6	7.1	6.3	7.3

urce: Pakistan Census Organization, 1984.

81

Table 3.3-2. Area, Population, Density and Household Size by Districts Near the Guddu Site, 1980-81

District	Area (sq km)	Population		Population Density (persons/sq km)	Household Size
		Number	Percent		
SIND	140,914	19,028,666	100	135.0	7.0
Jacobabad	5,278	1,012,476	5.32	191.8	7.3
Sukkur	11,093	1,098,240	5.77	99.0	6.9
Shikarpur	2,841	619,576	3.26	218.1	7.7
PUNJAB	205,344	47,292,441	100	230.3	6.4
D.G. Khan	24,240	1,582,584	3.35	65.3	6.6
Rahim Yar Khan	11,880	1,841,451	3.88	155	6.1
BALUCHISTAN	347,190	4,332,376	100	12.5	7.3
Nasirabad	5,832	394,454	9.10	67.6	7.0
Kohlu	17,770	175,090	4.04	9.9	6.7

Source: Pakistan Census Organization, 1983.

12

merchants' district, tenant and subsistence farmers, large landowners (zamindars) and their families, fishing community members, squatter settlements, and the expatriate labor force. These potentially affected populations vary ethnically and socioeconomically.

There are about 6,500 people within the WAPDA/ Guddu compound. An estimated 3,500 people inhabit the merchants' district in Guddu. The fishing community near the Guddu Barrage numbers around 2,600. The Pathans and Sindhis living along the Begari Sind Feeder and Pat Feeder canals number about 1,500. The Pathan tent community on the Sukkur-Guddu Road numbers about 500.

3.3.1.3 Employment and Economy

The economy within a ten-kilometer radius of the Guddu plant site is based primarily upon agriculture and livestock domestication. However, the nature of agricultural productivity is based upon tenancy, sharecropping, and subsistence agriculture. Meaningful agricultural statistics for this area do not exist. The availability of data on herd sizes and animal husbandry is unknown. Fish netting at the commercial and subsistence levels is an important primary economic activity near the plant site.

The combined cycle power plant construction force for the years 1985 through 1988 is broken down as follows:

1) The work force was about 600 for Lot 1A/1B (1985,1986, and the first half of 1987). In addition, there were about 500 contractors on the site for the same time period.
2) The work force has been about 1,000 for Lot 4 (June 1986 through June 1988). In addition, there were about 500 contractors on the site for the same time period.

The total number of workers for the operational phases is broken down as follows:

1) 2,396 for steam units 1, 2, 3, and 4; and
2) 621 for the 450/600 MW CCP.

The current payroll for the WAPDA/Guddu staff (excluding GE contract workers and 300 MW operational staff) is 6,773,00 Rs/month (US$386,587 at April 1988 exchange rate of 17.52Rs/1US$).

Electricity generation and transmission at the thermal station creates a multiplier effect in local industries and commerce. The Mari and Sui gas pipeline employees, as well as canal maintenance and power plant construction workers are dependent on thermal station productivity and expansion. The Guddu merchants' district is likewise dependent upon retail and bulk sales and service to power plant employees. Pathans, which manage many of the approximately 400 or so stalls at the merchant's district, also manage the donkey teams which carry dredged fill for upgrading or diking at the plant site. There are numerous other support services generated from power plant activities.

3.3.1.4 Transportation

The Guddu Power Development Project is located along the Guddu-Road which connects to the National and Indus highways. The estimated traveling distances between selected points on the Super (National) Highway are: Khanot to Hyderabad (45 km); Khanot to Karachi (160 km); Khanot to Guddu (300 km); Khanot to Lakhra (15 km); Karachi to Sukkur (491 km); Sukkur to Guddu (140 km); and, Sukkur to Multan (454 km).

Traffic counts on the Indus (located on the east bank of the Indus) and Super (National) Highways were made in early 1986, but the data are not yet available. The Sukkur-Guddu Road is a heavily trafficked segment that links Sind, Punjab and Baluchistan provinces. It is a very narrow asphalted strip (5 m or less) without road shoulders or turnouts. The edges of the roadway have been broken off in several areas.

There are several truck stops along the Sukkur-Guddu Road. The Hindu communities of Kandhkot and Kashmore sell gas and diesel fuel, and provide engine and repair service.

Motorized transport involves buses, vans, trucks, cars, and motorcycles. Scores of generally overcrowded buses and vans can be counted daily on this

84

road. Non-motorized modes of transport include a variety of large domestic animals (i.e., horses, camels, oxen, and donkeys) that are either ridden or pull two- and four-wheeled carts carrying passengers and/or goods.

The actual number of vehicle accidents on this road daily is not known. Poor road conditions and the mixing of motorized and animal traffic on the same roadway are very hazardous. Poor driving skills and vehicle quality are chronic problems in any rural developing area.

The road system is going to be upgraded from Hyderabad to Peshawar. This is part of the Master Plan for the Indus Right Bank Highway system. The GOP wants to start this project early next calendar year; the completion date for this highway system upgrade is 1996.

Axle loadings of heavy equipment transporters heavily overload the Indus Highway. However, due to the weight restrictions on the Kotri Barrage, transport permits on the Indus Highway have been allowed. Road repair crews travel with heavy equipment transporters to repair any road surface that is damaged and prepare any road or culvert diversions.

Weights and dimensions of items of heavy equipment (over 50 tons) that are brought up from Karachi are (dimensions and weights are approximate):

1) Gas turbines [3.7 x 3.7 x 11 meters (12 X 12 X 36 feet)] weighing about 200 tons hauled on specially-designed flatbed trailers;
2) HRSG economizer section [19 x 5.2 x 4.3 meters (62 X 17 X 14 feet)] at 270 tons;
3) HRSG superheater section [19 x 3.7 x 5.2 (62 X 12 X 17 feet)] at 227 tons;
4) HRSG elbow duct [19 x 5.5 x 9.1 (62 X 18 X 30 feet)] at 60 tons;
5) Generators [3.7 x 3.7 x 9.1 (12 X 12 X 30 feet)] at 270 tons; and,
6) Remaining equipment and accessories are transported in pieces and weigh less than 50 tons.

The procedure for transporting heavy equipment used at the power plant is similar to the recent transport of combined cycle equipment along the Guddu-Sukkur Road, in April 1988. On April 24, 1988, a Speedways heavy equipment

85

transporting team parked their vehicles just off the road near the proposed expansion project at Guddu. They were carrying a French-made gas turbine (203 tons) and an HRSG over to Multan. The team left from Karachi on April 11, 1988, and were traveling in the early morning hours to avoid heat and traffic congestion. The crew was comprised of drivers, mechanics, line lifters, and electrical utility technicians. A fuel reserve truck accompanied the convoy. Weight displacement of the flatbed hauling the gas turbine was said to be correctly measured given overall road conditions from the Port of Karachi.

Speedways is the heavy equipment hauler of preference for power plant units and accessories. They have hauled most of the units to the Guddu Thermal Station and they will probably be called upon to carry the units for the 300 MW expansion.

The Sukkur Airport was linked into the computerized reservations system of Pakistan International Airways in late April 1988. This is a small yet strategically located airport with 39 scheduled flights per week. Fokkers, Twin Otters, and Boeing 737s are the usual modes of transport at this airport. High security is maintained on a 24-hour basis.

Rail service is provided via a single line, broad gauge, Pakistan Railways track that runs parallel to the Sukkur-Guddu Road. There are several station stops, including Kashmore.

3.3.1.5 Facilities and Services

SECURITY

There is a considerable security network within the WAPDA/Guddu compound, and along the compound perimeter, the Guddu-Sukkur Road and the feeder roads leading to small villages. The security of the area involves military and provincial police, and night watchmen. Most power plant guards and gatekeepers are armed.

The monitoring and control of professional banditry (dacoity) in Pakistan have been the responsibility of the provincial government. Dacoit activity is prevalent in the Sukkur Division. One dacoit incident on the Guddu-

56

Sukkur Road involved a small dacoit group holding up one power plant driver. They were able to stop his vehicle by placing obstruction on the road. The roles of the police in dacoit operations are complex and controversial. Dacoity receives daily press exposure since the bandits engage in a spectrum of illegal activities throughout Pakistan. Plant security and constant night vigils on streets are effective deterrents to terrorist, saboteur, and dacoit operations.

LITERACY AND EDUCATIONAL ATTAINMENT

Pakistan's literacy ratio has increased from 21.7 per cent in 1972 to 26.2 percent in 1981, i.e., at an annual rate of a half percent (PCO, 1983). There are sharp differences in the literacy ratio of male and female populations. Similarly, there are dramatic differences in rural and urban literacy. The ratio ranges from 55.3 percent for urban males to a low of 7.3 percent for rural females (PCO, 1983). There are also differences among provinces. Sind has the highest literacy ratio (31.5 percent), followed by the Punjab (27.4 percent), the N.W.F.P. (16.7 percent) and Baluchistan (10.3 percent). The recently launched project, "Nai Roshni Schools 1986-1990" is expected to enhance literacy in rural areas. Several schools will be organized in existing school buildings in the Sukkur Division targeting illiterates in the 10-14 age group (Ministry of Finance, 1987; PCO, 1983). There are three levels of education available in the WAPDA/Guddu compound: 1) primary (grades 1-5); 2) high school (grades 6-10); and, 3) college (grades 11-12). There are 1500 students in primary school (ages 3-8 years old). There are 800 students in the two high schools (ages 9-14 years old). There are 120 students enrolled at the college level (ages 15-17 years old). These students are exclusively WAPDA employees' sons and daughters.

HEALTH CARE

There are many health problems in the Jacobabad District because the people generally are confronted with inadequate nutrition in an unsanitary and overcrowded environment. This is compounded by poor access to a very limited supply of health manpower. In 1981, this district had five hospitals with 208 beds, 29 dispensaries with 32 beds, three rural health centers with 24 beds, three sub-health centers, four maternal and child health centers, and one tuberculosis clinic (PCO, 1983a).

Health care availability within the Guddu compound is remarkably good. There are twelve licensed doctors practicing at the WAPDA/Guddu hospital. There are eight male general practitioners and/or specialists, including the Chief Medical Officer/Superintendent. There is one male dentist/dental surgeon. There are three female doctors and three female nurses. The paramedic/orderly support staff numbers 70. This is not a teaching hospital or research institution so it does not have any medical interns from Pakistani universities. There are regularly scheduled seminars updating the medical personnel on techniques and procedures. Health care statistics are presented in Table 3.3-3.

Worker accessibility to health care is a reasonably effective process. Non-WAPDA patients are admitted for treatment on a nominal fee-for-service basis.

The hospital is fully equipped to deal with occupational hazards and basic preventive medicine and dentistry. Child immunization programmes, radical surgery and intensive care facilities, and the blood transfusion center are very effectively run. There is a shortage of female nurses.

The epidemiologic profile of the WAPDA/Guddu compound is fairly typical of developing rural areas. There is a high prevalence of gastrointestinal infections due to water and spoiled food, tuberculosis due to overcrowding, upper respiratory infections due to temperature changes, kidney and bladder problems due to dehydration and nutritional imbalances, and especially chronic, end-stage diseases due to a lack of health education and awareness leading to early diagnosis, prevention and cure. Typhoid and malaria are common public health problems. Unlicensed and folk medicine is still highly prevalent in the more traditionally-minded families. Also, rural midwifery is managed mostly by unlicensed/uncertified women.

EMERGENCY EVACUATION PROCEDURES

A plan for the mass evacuation of the human population from the power plant site does not exist. The containment and control of natural gas fires and electrical fires at the power plant site are written up in standard operating procedures. There has not been devastating environmental

Table 3.3-3. Health Care Utilization Statistics, WAPDA Hospital

	Outpatient	Inpatient	Surgical Operations	Vaccinations EPI*
1986	36,150	418	276	1930
1987	37,258	510	315	2318
Net Increase Inpatient Load	1,108	92	39	388

Expenditures on Construction and Medical Equipment for WAPDA Hospital (as of April 22, 1988)

	(In millions Rs)
Civil Works	4.00
Medical Equipment	1.05
Air Conditioning	3.03
Total	8.08 (456,621 US$ at 17.52/1US$)

* Early Pregnancy Intervention

catastrophe at the power plant since its inception, but there was a major fire in a generator in 1974 and two more fires in 1978.

3.3.2 Land Use

Figure 3.3-1 presents a land use map within 10 km of the Guddu plant complex. The following subsections present land use characteristics of this area.

3.3.2.1 Agriculture

Pakistan's major export product is cotton. Sugarcane, low-quality rice for domestic consumption, and high-quality rice for export are cultivated in a fertile agricultural belt that runs from the northeast outside of Lahore in Punjab into the southeast of Sind. These crops are not grown near the power plant.

Agricultural productivity in the Guddu area is low because of waterlogging and high salinity. Aside from subsistence and sharecropping of wheat, there is no large-scale cash-cropping in the ten-kilometer radius around the power plant. There is some mixed farming and rotational cash-cropping of rice, wheat, cotton and chickpeas about eight kilometers east of the power plant along the Guddu-Sadiqabad Road. Irrigation water is available from the Ghotki Feeder Canal.

A number of small garden plots are cultivated by WAPDA personnel within the compound and in some of the outlying settlements. The rural conditions to the north and west of the power plant prove too harsh for any viable cropping.

There is a small mango orchard growing on the eastern side of the feeder canals about 1.5 km from the center of the power plant. It is surrounded by dikes (bunds) on three sides. This small grove is anomalously situated far west of Pakistan's renowned "mango belt" which runs from Multan in Punjab down into southeastern Sind. This orchard near the bund of the Pat Feeder Canal near the Guddu Barrage is 150 m wide by 600 m long with elevations ranging from 65 to 75 msl. It has 212 mango trees of varying size and age. There are no crops growing underneath the shade of the mango trees. The

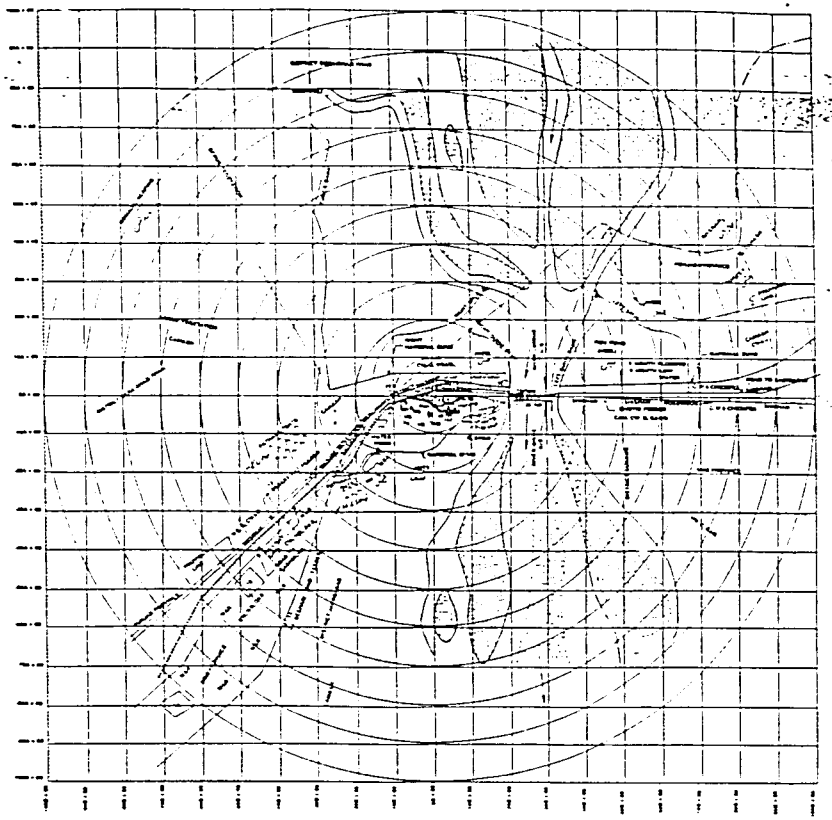

Figure 3.3-1 Land Use Map

BEST AVAILABLE DOCUMENT

KRN

91

property and the trees are owned by the Irrigation Department and they lease the rights to harvest the trees yearly to a Guddu farmer for the sum of 7,000 Rs. Pilferage is minimized by watchmen. Watchdogs in the nearby Sindhi settlement are especially aggressive at night. Moreover, the north side of the orchard is occupied by Irrigation Department employees who also protect their Irrigation Department's investment.

3.3.2.2 Livestock Domestication/Herding

Accurate data on livestock counts does not exist for this portion of the Jacobabad District. There are many sedentary agriculturalists who also manage small herds of water buffalo, cows, goats, sheep, donkeys, and camels. However, internal migration among the three provinces of Baluchistan, Punjab, and Sind is high and people typically move with their animals. Data on nomadic herding and transhumance activities in the area is not available.

There are some water buffalo within the WAPDA/Guddu compound. They are usually tethered near the living quarters. The largest single herd of animals confined to a small area near the power plant is the donkey teams in the Pathan tent-camps. There were 18 donkeys at the watering trough in mid-April 1988. They are hired out to haul out dredged material from the canal network and the Indus River. These donkey teams are instrumental in hauling fill over short distances to upgrade site elevations and fortify dikes.

There is no large-scale poultry industry in Guddu. Most poultry meat is imported from larger marketplaces. There is one slaughterhouse in Guddu.

3.3.2.3 Fishing

The primary function of the Indus and associated feeder canal system in the Guddu area is to serve power plant operation and irrigation. Protective dikes (bunds) normally extend over several thousand acres, as demarcated in Figure 3.3-1. These dikes influence surface water patterns on the Guddu landscape which, in turn, influence land use and vegetation type. Surface water channels serve numerous secondary functions, one of the foremost being that of providing fishing opportunities. There are vast tracts of land that are leased as fish ponds for commercial netting by contractors and their

92

crews. There are also large and small fishing communities that work the Indus River with boats in the Guddu area.

The most established fishing community in the Guddu area is situated downstream from the Guddu Barrage at the southernmost extension of the Guddu Thermal Station. This community, Abdullah Bhatti, has relocated itself several times within this segment of the Indus River over the last 35 years. The fishermen have been living at the current community site for three years. There are members of this same community who live exclusively on their boats.

The current headman of the community is employed by WAPDA at the Guddu facility. The total population of this community including one isolated settlement is approximately 2,560. There are about 300 thatched huts in a 0.6 sq km area and the average family size is nine persons. The linguistic breakdown of the community is about 60 percent Sindhi, 30 percent Siraiki, and 10 percent Punjabi. They adhere to a moderately rigid caste system. The physical layout of the community reflects social and cultural distinctions. There are three settlement areas: 1) the village houses that are located on the higher ground above the bund; 2) the boat people who live on their boats and on the shoreline below the bund; and, 3) a small settlement 0.4 km further downstream from the main settlement area.

The economic livelihood of this fishing community depends upon their ability to catch fish in the river and the canals. They subsist mainly on fish, they do not engage in any agricultural activity. The relationship of their headman with the local contractor who has leased fish ponds near the village is very important for employment opportunities. This contractor (thekedar) uses the fishermen pool of labor when he sets his small fleet of boats upon the fish ponds. He is a major source of employment for this community since only about 30 community members are employed at the power plant.

There are about 50 fishing boats (kashtis) of varying sizes. The boats that are built on the shoreline in front of the bund are constructed of a mountain pine transported by trucks/lorries from Kashmir. The 1976 flood

did not affect community structures above the bund but it did destroy many of the docked boats.

3.3.2.4 Wildlife and Natural Vegetation Habitats

There are no national parks, wildlife sanctuaries, or game reserves in the Guddu area. Scrub vegetation predominates the area; there are riverain forests near the fish ponds 3.5 km southeast of the power plant.

3.3.2.5 Forest Reserves

There are no known forest reserves within a ten-kilometer radius of the power plant. Rosewood trees (shisham) line the north-south running feeder canals near the power plant, as indicated in Figure 3.3-1. These trees fortify/stabilize the embankments of the canals and they also serve as windbreaks during seasonal high winds and duststorms and provide shade for workers during break periods. These trees are not harvested unless they are diseased or are obstructing building plans. It is a prosecutable offense to cut down such trees in Sind. WAPDA and the Irrigation Department regularly advertise in the Pakistani newspapers for bids to harvest forest reserves.

There are riverain forest areas a several kilometers from the power plant that are exploited for brushwood. Brushwood is usually used for fencing around compounds and kindling for firewood cooking and heating.

3.3.3 Cultural Resources

3.3.3.1 Cultural Diversity and Ethnicity

The traditions and culture of Pakistan have roots going back thousands of years to the Dravidian-based Indus Valley Civilization. That foundation has been modified by Aryan, Turk, Greek, Persian, Afghan, Arab, Moghul, British, and tribal influences over the centuries. Although there is a commonality of principles guiding social behavior and Islamization is being implemented throughout the country, ethnic diversity and separateness among the four major groups (Baluchis, Pathans, Punjabis, and Sindhis) is very prominent. There is also a large Hindu population between Sukkur and Guddu, the largest concentration being in Kandhkot (about 40,000).

People ranked on the higher level maintain a separateness from those lower than themselves and when interaction does take place it is governed by strict social norms, based on the concepts of separation and hierarchy. Separateness is demonstrated by the fact that ethnic groups prefer living in residential areas with their own kind. Pathans prefer living among their people rather than being interspersed with Baluchis; and, in villages, Baluchis have their own areas while Sindhis stay in their territory. Within these larger groups, caste and kin groups tend to cluster. Living among one's own kind is important in the WAPDA/Guddu compound, the compound perimeter, and rural outlying areas.

3.3.3.2 Historical and Archaeological Resources

Pakistan enjoys a high international position in the history of past achievements by virtue of possessing the greatest vestiges of the first three mature civilizations of the world. Traces of the Indus Valley Civilization can be found in the ruins of Moen-jo-Daro, Amri (on the right bank of the Indus in Sind), Kot Diji (on the left bank) and further up in the plains of the Punjab (near the city of Sahiwal), the remains of Harappa. Later day evidence of organized civil life and thriving cities is borne out by the ruins of Taxila in the Haro Valley, some 30 kilometers west of Islamabad. The rock carvings of Hunza have been acclaimed worldwide.

Many of the existing structures on the Sukkur-Guddu Road have been constructed in the late 20th century. Guddu and the Guddu Thermal Station are likewise recent. Significant historic or archaeological sites, places, or structures have not been identified in the Guddu site area.

3.3.4 Existing Guddu Project

3.3.4.1 Primary and Secondary Infrastructure Development

The development over three decades has been significant. Numerous facilities, such as schools, medical facilities, mosques, recreational parks, and clubs, have been developed to ameliorate worker conditions. Higher wages and special compensations stabilized the labor force at all levels. The quality of life and fulfillment of basic human needs at the thermal station and its surroundings is reflected in the status of existing primary and secondary infrastructures. Guddu is a thriving area because of

enhanced public and private sector investments in human resources. The infrastructural development that has accompanied these investments are presented in the following paragraphs.

HOUSING/SHELTER

The WAPDA worker colony provides adequate housing for employees. Living quarters have brick and/or block walls, high ceilings, windows, and one door. Electricity is provided to each unit by WAPDA; each unit has its own meter. There are bachelors' and family quarters. Water and sewer service is available for each unit. Outside the compound, water is available via hand pump.

The WAPDA officer and expatriate residences are usually single-family dwellings with small front yards and gardenspace. Air conditioning is a prohibitively expensive luxury for lower and mid-grade WAPDA employees because of the unit's retail price and the cost of maintenance in a seasonally high-temperature, duststorm-prone environment. Electric fans are a cost-effective alternative.

Housing on the compound perimeter is typical of a rural Pakistani design. House types can vary from single-room dwellings to small fortress-like citadels. The materials used in house construction also vary. Baked brick, block, brushwood, wattle-and-daub mixtures, and stone are some of the more prominent building materials. Tents surrounded by brushwood are commonplace near the compound. Sindhis, Punjabis, and especially Pathans pride themselves on the quality and quantity of their draft animals. Usually the animals are tethered near their living quarters.

WATER

Water is the lifeblood of this oasis-like environment at Guddu. The feeder canals from the Indus River provide for usual freshwater uses and activities, such as bathing, washing, and drinking.

Potable drinking water (WHO Standards) is not available to local populations. A series of 14 handpumps are used in the merchants' district.

Spigot water is available in the worker colony and WAPDA officer and expatriate residences. There is no water treatment facility.

SANITATION

Garbage is normally piled in the street and burned regularly. There are no garbage pickups or landfill sites.

Sewage disposal for the WAPDA/Guddu compound is discussed in subsection 3.1.2.1. There are no other central collection systems in the area.

MEDICAL FACILITIES

The WAPDA/Guddu hospital is a 50-bed facility 1.5 km from the power plant. Dr. Kasi has been the Chief Medical Officer for this hospital since its inception in 1969. The hospital has been constructed in three phases, only interrupted seriously in 1971 with the Pakistan-India War.

There are two interrelated concepts of health services provision at this hospital: preventive medicine and primary health care. This is a hospital for workers employed by WAPDA since worker productivity depends upon health status. However, the balance of the non-WAPDA community has access on a nominal fee-for-service basis.

The hospital provides a comprehensive, full-service of surgery specializations: general, gynecological, ENT, ophthalmological, and dental. Surgery is generally thought to be the preferred mode of treatment in rural, developing areas. The rationale is that skilled and unskilled worker labor and peasantry cannot withstand the financial hardships incurred by taking time off from work with follow-up visits that involve symptomatic treatment. Physical accessibility to the clinic and a myriad of cost factors must be weighed in requiring follow-up visits. Hemorrhoidectomies, hernia repair, and kidney stone removals are generally recognized as "once-through" visits.

Moreover, road conditions, even metalled road conditions, preclude the possibility of acute/traumatic patient transport to Sukkur or Rahim Yar Khan.

97

There is a serious shortage of female nurses at the Guddu medical facility. As is the case with all ranks of medical personnel in Pakistan, many of them seek out the higher salaries and higher standards of living in the major cities of Pakistan or expatriate within the Gulf region.

The hospital has a blood transfusion center but neither a blood nor plasma bank. Their system of blood and plasma acquisition is based upon the WAPDA worker pool and the Guddu community. Blood and blood components can be provided quickly for emergency or next-day surgery. Relatives invariably donate in behalf of the patient; however, if this is not expedient, blood can be found quickly in the WAPDA compound (Dr. Kasi, personal interview). Blood banking is critically dependent upon refrigeration; power outages are frequent and backup generators are a rarity. This system, if blood type and HIV antibody screening are done properly, is probably the most efficacious way to manage the supply and demand for blood products for a company hospital.

The statistics for frequency of visits and reasons for visits have not yet been compiled due to the pressing need for completion of the third construction phase of the hospital.

RELIGION

Islam is the primary religion of the WAPDA/Guddu compound. The number and quality of mosques on the Guddu area provide visible manifestation of the Pakistani adherence to Islamic principles. There are four mosques in the WAPDA/Guddu compound and 20 much smaller mosques in the 1.6 km long merchants' district strip on the Sukkur-Guddu Road. Hundreds of small mosques line the route to Sukkur.

TRANSPORTATION

The cost of cars and motorcycles/scooters preclude vehicle ownership to all except a small fraction of the population. The usual means of transportation from Guddu to larger marketplaces is by bus or van. Non-motorized transport ranges from draft animals pulling carts to bicycles and walking.

Transportation to and from the power plant for WAPDA workers is provided at scheduled times.

FOOD

Within the Guddu plant compound, many of the WAPDA employees have vegetable garden plots, averaging 35 square meters. There is subsistence cropping done outside the compound near canal freshwater supplies. Meat, poultry, and dairy products are generally imported into the area from larger marketplaces. Inadequate refrigeration and air conditioning systems preclude perishables storage. Fish are commercially netted in nearby fish ponds, but prices are generally too high even for WAPDA families.

There is a small bazaar area within the compound that offers a range of goods and services. There are several small concession stores that operate throughout the compound area. Perishability due to inadequate refrigeration facilities, is a serious problem.

3.3.4.2 Changes in Lifestyle, Cultural Patterns and Attitudes

Ethnicity plays a major role in determining the cultural patterns on the Guddu landscape. Pathans are stereotyped as the business/entrepreneurial group. They run many of the business operations in the merchants' district and they own and manage the draft animal contracts.

The degree of animosity among or within groups does not generally rise above a trip to the Civil Complaining Office. Worker morale, productivity, and civility at any individual or social group level can become strained in a harsh, remote environment. However, Guddu is now a physically accessible location with a fully developed infrastructure; as a result, there was evidence of social group adjustment and adaptation to work and home environments.

3.3.4.3 Project Needs

The concrete work on the backup cooling tower for the 450 MW unit was nearing completion in late April 1988. The mechanical work on the cooling tower should take about two months. Once completed, the construction workers will be released from their jobs. Many of the workers will most

probably be anxious to secure employment in the construction phase of the 300 MW expansion. In any event, their needs must be considered.

Operational personnel for the 450 MW have been on the job for some time. Expatriate involvement in the 450 MW will decrease dramatically in late May or early June 1988 due to contract expiration. The need for qualified replacement of expatriates is essential to productive power plant operation.

100

4.0 ENVIRONMENTAL IMPACTS OF THE PROPOSED PROJECT AND ALTERNATIVES

4.1 PHYSICAL ENVIRONMENT

4.1.1 Air Quality

4.1.1.1 General Modeling Analysis

Air quality impacts from the proposed 300 MW gas turbine combined cycle (GTCC) units and other sources were predicted using USEPA-approved air dispersion models. The selection of a model was based on its applicability to simulate impacts in areas surrounding the plant. Within 10 km of the proposed power plant site, the terrain can be described as "simple" terrain, i.e., flat to gently rolling. As defined in the USEPA modeling guidelines (USEPA, 1987b), simple terrain is considered to be an area where terrain features are all lower in elevation than the top of the stack(s) under evaluation.

For simple terrain, the Industrial Source Complex (ISC) model can be used to predict maximum air quality concentrations due to the proposed sources. The ISC model (USEPA, 1988a) is a Gaussian plume model which can be used to assess the air quality impact of emissions from a wide variety of sources associated with an industrial source complex. The model is contained in USEPA's User's Network for Applied Modeling of Air Pollution (UNAMAP), Version 6 (USEPA, 1988b). The model is applicable to sources located in either flat or rolling terrain, where terrain heights do not exceed stack heights.

The ISC model consists of two computer codes which are used to calculate short- and long- term ground level concentrations. The main differences between the two codes are the input format of the meteorological data and the method of estimating the plume's horizontal dispersion. The ISC short-term model (ISCST), an extended version of the Single Source (CRSTER) Model (USEPA, 1977), is designed to calculate hour-by-hour concentrations or deposition values and to provide averages for time periods of 2, 3, 4, 6, 8, 12, and 24. If used with a year of sequential hourly meteorological data, the ISCST model can also calculate annual concentration or deposition values. The ISC long-term model (ISCLT) is a sector-averaged model that extends and combines basic features of the Air Quality Display Model (AQDM) and the Climatological Dispersion Model (CDM). The long-term model uses

statistical wind frequencies to calculate seasonal (quarterly) and/or annual ground-level concentration or deposition values. Both ISCLT and ISCST use either a polar or a Cartesian receptor grid.

In this analysis, the ISCST model was used to calculate both short-term and annual average concentrations because these concentrations are readily obtainable from the model output. Major features of the ISCST model are presented in Table 4.1-1. The ISC model has rural and urban options which affect the wind speed profile exponent law, dispersion rates, and mixing-height formulations used in calculating ground level concentrations.

For modeling analyses that will undergo regulatory review, the following model features are recommended by USEPA (1987b) and are referred to as the regulatory options in the ISCST model:

1. Final plume rise at all receptor locations,
2. Stack-tip downwash,
3. Buoyancy-induced dispersion,
4. Default wind speed profile coefficients for rural or urban option,
5. Default vertical potential temperature gradients,
6. Calm wind processing, and
7. A decay half life of 4 hours for SO_2 concentration calculations in urban areas.

Some of the above model features have been recommended for use by USEPA over the last 6 years. These assumptions include the use of final plume rise, default wind speed profile coefficients, default vertical potential temperature gradients, and calm wind processing of maximum ground level concentrations. The recently revised USEPA modeling guidelines recommend use of the remaining features, including the use of calm wind processing regardless if impacts are expected to occur under such meteorological conditions.

4.1.1.2 Source Data

The source information required by the ISCST model includes both stack characteristics and emission data. The stack characteristics and emission

Table 4.1-1. Major Features of the ISCST Model

ISCST Model Features
o Polar or Cartesian coordinate systems for receptor locations
o Rural or one of three urban options which affect wind speed profile exponent, dispersion rates, and mixing height calculations
o Plume rise due to momentum and buoyancy as a function of downwind distance for stack emissions (Briggs, 1969, 1971, 1972, and 1975)
o Procedures suggested by Huber and Snyder (1976); Huber (1977); and Schulmann and Hanna (1986) and Schulmann and Scire (1980) for evaluating building wake effects
o Procedures suggested by Briggs (1974) for evaluating stack-tip downwash
o Separation of multiple point sources
o Consideration of the effects of gravitational settling and dry deposition on ambient particulate concentrations
o Capability of simulating point, line, volume and area sources
o Capability to calculate dry deposition
o Variation with height of wind speed (wind speed-profile exponent law)
o Concentration estimates for 1-hour to annual average
o Terrain-adjustment procedures for elevated terrain including a terrain truncation algorithm
o Receptors located above local terrain, i.e., "flagpole" receptors
o Consideration of time-dependent exponential decay of pollutants
o The method of Pasquill (1976) to account for buoyancy-induced dispersion
o A regulatory default option to set various model options and parameters to EPA recommended values (see text for regulatory options used)
o Procedure for calm-wind processing

Source: USEPA, 1986b

data for existing sources were supplied by WAPDA and Gibbs & Hill and were presented in Tables 3.1-5 and 3.1-6, respectively. Source information for the proposed units was supplied by Gibbs & Hill and is presented in Tables 4.1-2 through 4.1-4.

As discussed in Section 3.1.1.4, all the Guddu sources have the capability to burn either oil or natural gas; however, the primary fuel is natural gas. Oil is used only during periods when natural gas is in short supply due to consumption for residential heating. This situation occurs in December or January. Therefore, the modeling results of sources for oil-burning operation produces conservative estimates of maximum concentrations.

The existing proposed gas turbine combined cycle (GTCC) units can operate in either the simple cycle mode or the combined cycle mode. Air emission rates are the same in either mode, but in the combined cycle mode, the stack gas exhaust temperature and gas flow rate are considerably lower than in the simple cycle mode (see Table 3.1-5 and Table 4.1-3). Due to the greatly decreased plume rise associated with the stack gases under the combined cycle mode, maximum ground-level concentrations will occur under this operating mode. As a result, modeling of the existing and proposed gas turbine combined cycle units was performed for the combined cycle operating mode. Modeling of the simple cycle mode operation was only performed for the proposed 300 MW GTCC units for comparison purposes.

4.1.1.3 Receptors

The receptor grid used in the ISCST model consisted of 396 receptors located in a radial grid centered on the existing GTCC No. 2. Receptors were located along 36 radials, separated by 10 degree increments, at distances of 0.1, 0.3, 0.5, 0.8, 1.2, 1.7, 2.3, 3.0, 4.0, 6,0, and 8.0 km from the grid center. Because this area is flat, no terrain elevations were included in the modeling. This geographic area covered by the receptor grid encompasses Guddu and sensitive receptors, i.e., schools and medical facility, in proximity of the power plant.

Table 4.1-2. Operating Parameters for Proposed Guddu Units

Parameter	Units	Proposed 300 MW GTCC Units* Each (SS)	Each (CC)
		(METRIC UNITS)	
Rating	MW	100	150
Heat Rate	Kcal/Kwhr	2,720	1,850
Heat Input	10^6 Kcal/hr		
Mari Gas	-	278	278
HSD Oil	-	241	241
Fuel Usage			
Sui Gas	Nm^3/hr	-	-
Khandhkot gas	Nm^3/hr	-	-
Mari gas	Nm^3/hr	43,271	43,271
HSD Oil	Kg/hr	21,934	21,934
	l/hr	25,505	25,505
Furnace Oil	Kg/hr	-	-
	l/hr	-	-
		(ENGLISH UNITS)	
Rating	MW	100	150
Heat Rate	Btu/kwhr	10,794	7,341
Heat Input	10^6 Btu/hr		
Mari Gas		1,103	1,103
HSD Oil		956	956
Fuel Usage			
Sui Gas	scfh		
Khandhkot Gas	scfh		
Mari gas	scfh	1,527,701	1,527,701
HSD Oil	lb/hr	48,313	48,313
	gal/hr	6,805	6,805
Furnace Oil	lb/hr	-	-
	gal/hr	-	-

* Two identical gas turbines with heat recovery steam generators.

Notes: SS - Simple Cycle Operation
CC - Combined Cycle Operation (normal operation)

Sources: Gibbs & Hill, 1988
KBN, 1988

BEST AVAILABLE DOCUMENT

Table 4.1-3. Summary of Stack Parameters for Proposed Guddu Units

Parameter	Units	Proposed 300 MW GTCC UNITS Each (SS)	Each (CC)
		(METRIC UNITS)	
Height	m	21.3	21.3
Area	m^2	40.8	24.2
Temperature	°C	536	183
Flow rate - Gas	Kg/s	381.6	381.6
- Oil	Kg/s	377.4	377.4
- Gas	m^3/s	889.0	500.9
- Oil	m^3/s	871.1	490.9
Velocity - Gas	m/s	21.80	20.74
- Oil	m/s	21.36	20.32
		(ENGLISH UNITS)	
Height	ft	70	70
Area	ft^2	439	260
Temperature	°F	997	361
Flow rate - Gas	acfm	1,883,633	1,061,402
- Oil	acfm	1,845,797	1,040,082
Velocity - Gas	fps	71.51	68.04
- Oil	fps	70.08	66.67

Notes: SS - simple cycle operation
CC - combined cycle operation (normal operation)

Sources: Gibbs & Hill, 1988
KBN, 1988

BEST AVAILABLE DOCUMENT

106

Table 4.1-4. Air Pollutant Emission Rates for Proposed Guddu Units

Parameter	Units	Proposed 300 MW GTCC Units Each (SS)	Each (CC)
		(METRIC UNITS)	
Gas Firing			
Particulates	g/s	0.63	0.63
Sulfur Dioxide	g/s	0.05	0.05
Carbon Monoxide	g/s	3.50	3.50
Nitrogen Oxide	g/s	91.6	91.6
Vol. Org. Compds	g/s	0.48	0.48
Oil Firing			
Particulates	g/s	1.26	1.26
Sulfur Dioxide	g/s	121.7	121.7
Carbon Monoxide	g/s	3.47	3.47
Nitrogen Oxide	g/s	142.9	142.9
Vol. Org. Compds	g/s	1.40	1.40
		(ENGLISH UNITS)	
Gas Firing			
Particulates	lb/hr	5	5
Sulfur Dioxide	lb/hr	0.44	0.44
Carbon Monoxide	lb/hr	3.47	3.47
Nitrogen Oxide	lb/hr	727	727
Vol. Org. Compds	lb/hr	3.85	3.85
Oil Firing			
Particulates	lb/hr	10	10
Sulfur Dioxide	lb/hr	966	966
Carbon Monoxide	lb/hr	27.5	27.5
Nitrogen Oxide	lb/hr	1,134	1,134
Vol. Org. Compds	lb/hr	11.1	11.1

Notes: SS - simple cycle operation
CC - combined cycle operation (normal operation)

BEST AVAILABLE DOCUMENT

4.1.1.4 Meteorological Data

Meteorological data needed to perform air dispersion modeling consist of the following five meteorological parameters:

1. Wind direction--determines the transport directions toward which the plume will travel and potentially affect receptors downwind of the plant;
2. Wind speed--determines the amount of dilution of plume concentration and height to which the plume will rise;
3. Temperature--affects the height to which the plume will rise and also is used in estimating afternoon mixing heights;
4. Atmospheric stability--determines the extent of plume spread or dispersion in the vertical and horizontal directions;
5. Mixing height--determines the maximum vertical extent or volume of air in which the plume can disperse.

These parameters can be measured directly or inferred from other measured parameters. In general, surface observations collected at meteorological stations include wind direction, wind speed, temperature, cloud cover, and cloud ceiling. The wind speed, cloud cover and cloud ceiling values are used in the USEPA preprocessor program, RAMMET, to determine atmospheric stability using the Turner stability scheme (1964). Based on the maximum afternoon surface temperature, morning and afternoon mixing heights can be calculated with radiosonde data (generally collected in the early morning and late afternoon) using the Holzworth approach (1972). Hourly mixing heights can be derived from the morning and afternoon mixing heights using the interpolation method developed by USEPA (Holzworth, 1972).

The hourly surface data and mixing heights are used to develop a sequential series of hourly meteorological data (i.e., wind direction, wind speed, temperature, stability, and mixing heights). If the observed hourly wind directions are classified into sectors (such as 10 or 22.5 degrees), the wind directions can be randomized within each sector using the RAMMET program to account for the expected variability in air flow.

For this analysis, surface and upper air observations from the Pakistani Meteorological Service (PMS) stations in Rohri and Multan, respectively,

 BEST AVAILABLE DOCUMENT

were obtained and used in the air modeling analysis (see Figure 3.1-1 for station locations). Data from these stations were considered representative of meteorological conditions at the project site. These stations are the closest weather stations to the project site that are surrounded by similar topographical features and have most of the necessary meteorological data for the air dispersion model. Because of the potential variation of meteorology during the monsoons from year to year, approximately two years of observations were obtained from the PMS: January to November, 1985 and January to December, 1987.

Hourly cloud cover and cloud height data were not available from the PMS station in Rohri. However, based on daily cloud cover data collected for 1985 and 1987 by Gibbs & Hill at the project site, the skies at the project site are clear to mostly clear for approximately 85 percent of the time throughout the year. In this analysis, the skies were assumed to be clear for the entire year.

A comparison of the air dispersion model and meteorological preprocessor input requirements to the parameters available from the stations in Rohri and Multan are presented in Table 4.1-5. Because the meteorological program was based on processing data from NWS stations in the United States in specific formats, the RAMMET program was modified to linearly interpolate values between every third hour observation convert parameters into proper units, and assign an indicator for hours of missing data (i.e., assume calm conditions).

It should be noted that wind direction data Rohri were reported for every third hour in 45 degree sectors, centered on the directions of north, northeast, east, southeast, south, southwest, west and northwest. For the hours when wind data were not observed, the wind directions were interpolated in the RAMMET program to these same categories. However, in the preprocessor, all wind directions were randomized over a 22.5 degree sector, rather than 45 degrees to provide a more conservative approach in estimating potential impacts. Using this approach, the winds would be randomized or distributed over a smaller sector, with the potential for

BEST AVAILABLE DOCUMENT

Table 4.1-5. Comparison of Air Dispersion Model and Meteorological Preprocessor Input Requirements to Parameters Available from Meteorological Stations at Rohri and Multan

Parameter	Rohri and Multan Meteorological Stations	Model and Preprocessor Requirements
Wind Direction		
Frequency	Every third hour	Every Hour
Reported Units	Nearest 45 degrees up to 8 directions	Nearest degree but can be randomized over sector width for reported direction
Wind Speed		
Frequency	Every third hour	Every hour
Reported Units	Knots	Units converted to m/s
Minimum Value	2 Knots	Assumes valid speed is 3 knots or 1.0 m/s
Temperature		
Frequency	Every third hour	Every hour
Reported Units	°C	Units converted to °K
Stability*		
Based on:		
Cloud Cover		
Frequency	Not Available**	Every Hour
Reported Units		Units coded from 0-10, which represent the fraction of cloud cover
Cloud Height		
Frequency	Not Available	Every hour
Reported Units		Actual height in ft.
Wind Speed	See above	See above
Mixing Height+		
Based on:		
Radiosonde Data		
Frequency	Twice daily	Twice daily
Reported Values, units	Temperature at mandatory levels at the surface, 850,700 and 500 mb.	Temperature and pressure at mandatory and significant levels
Temperature	See above	See above
Stability	See above	See above

* Not measured directly but inferred using Turner method (USEPA, 1964) and specified parameters.
\+ Not measured directly but inferred using Holzworth method (USEPA, 1982) and specific parameters.
** Available from data collected on a daily basis at the project site.

BEST AVAILABLE DOCUMENT

wind directions to be more persistent towards receptor locations than if a larger sector were used.

After a review of the radiosonde data from Multan, the maximum afternoon mixing height was assumed to be 1500 m for every day. This was an arbitrary value because the maximum afternoon mixing height, calculated using the maximum afternoon temperature from Rohri, indicated higher mixing heights. However, because of the limited amount of upper air (only 4 levels reported), a value of 1500 m was selected in order to be conservative in estimating maximum predicted concentrations.

4.1.1.5 Building Wake Effects

The ISCST model includes algorithms used to estimate the effects of building wakes on effluent dispersion. The wake-effect algorithms may be applied to any stack on, or adjacent to, a building. Under moderate to strong wind speed conditions, the effluent emanating from a stack or building may not totally escape the aerodynamic wake region on the downwind edge of the building. This results in a downwash condition where the effluents are mixed into the wake region. Building shape and orientation to the wind affect the dimensions of the turbulent wake and the degree of downwash. The stack height, building height and width, horizontal wind speed, plume exit velocity, and plume buoyancy determine which portion of the plume, if any, will clear the turbulent wake.

The criteria used to address whether building downwash could occur are based on USEPA recommendations (USEPA, 1985) for determining Good Engineering Practice (GEP) stack height. Based on that criteria, if the stack height is less than GEP, then atmospheric downwash, eddies, and wakes created by nearby structures may influence the stack effluent and cause high ground-level concentrations. In the United States, GEP stack height has been defined as follows:

GEP = H + 1.5 L, where H is the height of the nearby buildings or structures; and L is the lesser dimension of the height or projected width of the nearby structure.

BEST AVAILABLE DOCUMENT

111

A nearby building is defined as a building located up to 5 times the lesser of the height or width of the building, but not greater than 0.8 km from the stack.

The ISCST model incorporates the above criteria to determine which plumes are affected by building wake effects. Once the model determines that a plume is affected by a nearby structure, dispersion parameters are adjusted accordingly.

In order for the ISCST to assess the effects of nearby structures the user must supply the model with information on building dimensions. It is necessary to calculate the maximum projected (cross-wind) building dimension. For a simple rectangular building, this dimension is the diagonal measured from one corner of the structure to the opposite corner.

Given a building length and width, the ISCST model calculates the diameter of a circle having an area equal to the building area and uses this diameter for the building wake calculations. For the model to use the projected building diagonal instead of the actual building dimensions for downwash calculations, it is necessary to adjust the building length and width so that the diameter of the resulting circle, calculated by the model, is equal to the building diagonal.

From a review of the buildings at the Guddu facility and the locations of the existing and proposed sources, three buildings were determined to have the potential for producing building wake effects. A summary of building dimensions, modeled building dimensions, and associated sources is presented in Table 4.1-6. The actual building dimensions were obtained from WAPDA and Gibbs & Hill. The building dimensions for the proposed units were obtained from Gibbs & Hill.

4.1.1.6 Results

Maximum Impacts

Presented in Table 4.1-7 are the results of the modeling analysis of the proposed 300 MW GTCC units only. Results are shown for both simple cycle

BEST AVAILABLE DOCUMENT

Table 4.1-6 Summary Of Actual and Modeled Building Dimensions Used is ISCST Modeling

Modeled Source	Associated Building	Actual Building Dimension (m)				Modeled Building Dimension (m)	
		Height	Length	Width	Projected Width*	Height	Width+
Existing							
Steam Units No. 1 and 2	Boiler Turbine No. 1 and 2 Building	37.0	99.7	40.8	107.7	37.0	95.4
Steam Units No. 3 and 4	Boiler Turbine No. 3 and 4 Building	37.0	115.8	40.8	122.8	37.0	108.8
GTCC No. 1 and 2	Gas Turbine No. 1 and 2 Building	12.2	36.6	6.1	37.1	12.2	32.9
GTCC No. 3 and 4	Gas Turbine No. 3 and 4 Buildings	12.2	36.6	6.1	37.1	12.2	32.9
Proposed							
GTCC No. 5 and 6	Gas Turbine No. 5 and 6	12.2	36.6	6.1	37.1	12.2	32.9

* Maximum diagonal dimension

\+ Used to simulate the actual building diagonal (maximum projected width)

Table 4.1-7. Comparison of Maximum Predicted Concentrations Due to the Proposed GTCC Units Operating in Combined Cycle for the Entire Year

Fuel	Pollutant	Averaging Period	Maximum Concentration (ug/m^3)
Oil*	SO_2	24-Hour	26
		Annual	3
	TSP	24-Hour	0.27
		Annual	0.03
	NO_x	Annual	3.8
Natural Gas	SO_2	24-Hour	0.01
		Annual	0.001
	NO_x	Annual	2.4

* Only used during natural gas curtailments which occur primarily during the winter months of December and January.

114

operation and combined cycle operations. As shown, operation in the combined cycle mode results in the maximum air quality impacts.

Modeling was performed to predict ground-level concentrations resulting from the combined effects of both existing and proposed Guddu sources. The results of the ISCST modeling analysis are presented in Table 4.1-8. It should be noted that the maximum impacts of the proposed Guddu expansion project (see Table 4.1-7) ar not directly additive to the baseline impacts (see Table 3.1-8). This is because the proposed units are not located near any of the existing sources and there are differences in emission rates and stack parameters. The concentrations presented in Table 4.1-8 represent the predicted impacts due to the combined effects of all existing and proposed sources at the WAPDA facility for the 1985 and 1987 meteorological database. Each of the predicted concentrations is well below the applicable World Bank air quality guidelines.

As previously discussed, NOx emissions due to oil combustion were not modeled, because World Bank Air Quality Standards for NO_x are based on an annual average concentration. The WAPDA facility only uses oil for fuel in December and January during periods when natural gas supplies are low due to residential heating.

Comparison of the results of the modeling analysis of baseline air quality (Table 3.1-8) with the results of the modeling analysis for future conditions (Table 4.1-8) shows that the change in maximum air quality impacts is negligible. Maximum SO_2 and PM impacts are predicted to increase negligibly above the current baseline level. This is because the existing maximum impacts for SO_2 and PM are due primarily to the existing steam generating units and the proposed units have an insignificant impact at these locations.

In the case of NO_x, the future maximum annual average impact is predicted to increase by only 1 ug/m^3 over the existing maximum baseline impact (from 11 ug/m^3 to 12 ug/m^3). This result reflects the relatively small impact the proposed units are predicted to have. As shown in Table 4.1-7, the

Table 4.1-8. Predicted Maximum Ambient Concentrations Due to Existing and Proposed Sources at Guddu Power Development (Proposed GTCC Units Operating All Year)

Pollutant	Averaging Time	Maximum Predicted Concentration (ug/m3)	World Bank (ug/m3)
Natural Gas			
Sulfur Dioxide	24-Hour	23	500
	Annual	4	100
Nitrogen Dioxide	Annual	12	100
Oil*			
Sulfur Dioxide	24-Hour	325	500
	Annual	54	100
Particulate Matter+	24-Hour	23	500
	Annual	3.8	100
Nitrogen Dioxide	Annual	15	100

* Only used during natural gas curtailments which primarily occur during the winter months of December and January.

\+ Background concentrations for particulate matter are 200 ug/m^3.

proposed units will cause at most a 2 ug/m^3 annual average NO_x impact at any location.

Isopleths/Probable Impacts

As previously discussed, oil is primarily used in the winter months of December and January during which SO_2 impacts are the highest. In contrast, natural gas usage occurs year 'round, except for curtailments and NO_x emissions are relatively constant. Isopleths, or lines of equal concentration, for these probable worst case conditions for SO_2 and NO_2 are shown in Figures 4.1-1 through 4.1-5.

Maximum probable 3-hour and 24-hour SO_2 concentrations occurring during December and January are presented in Figures 4.1-1 and 4.1-2, respectively. As shown, the highest concentrations occur within 5 kilometers of the plant site in directions from northeast clockwise through southwest. Maximum probable 3-hour, 24-hour and annual NO_2 concentrations are shown in Figures 4.1-3, 4.1-4, and 4.1-5, respectively. The highest short-term, i.e., 3-hour and 24-hour, concentrations occur within 5 kilometers of the plant and generally north of the plant. The highest annual average NO_2 concentration occurs about 6 kilometers northeast of the plant.

It should be noted that the results presented in these figures are the maximum probable impacts and are less than those shown in Table 4.1-8.

Transboundary Air Quality Considerations

SO_2 emissions from the Guddu power development may be converted to acidic (or potentially acidic) compounds when transported over large distances. These conversions are caused by gas-phase and aqueous phase reactions, which are complex both physically and chemically. The acidic compounds can be deposited on ground surfaces by dry deposition processes (gaseous and aerosol) as well as wet deposition processes (precipitation). The proximity of India to the Guddu site (approximately 75 km distance) indicates a potential for acidic deposition effects due to power plant emissions. Because such complex transformation and deposition mechanisms are associated with distance scales of 100s to 1,000s of kilometers, it is not possible to predict environmental effects associated with a certain level of SO_2

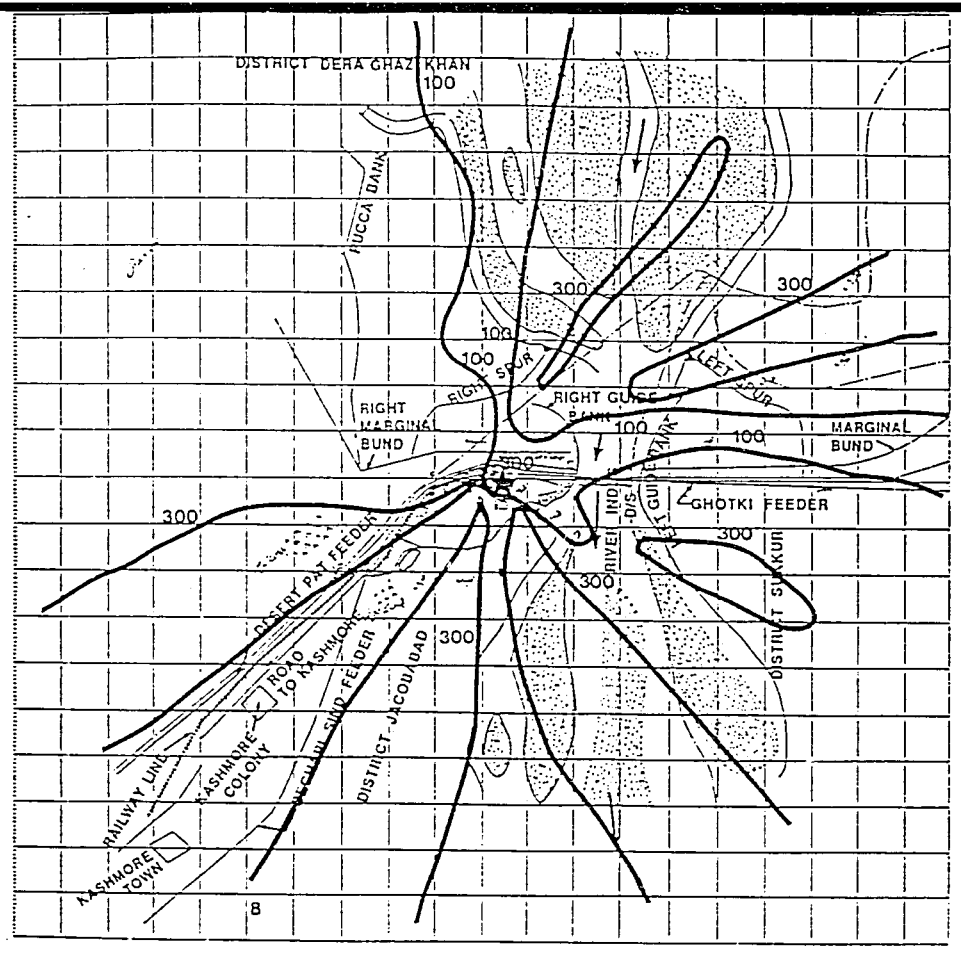

N

Scale
Each grid is
1 x 1 kilometer

★ Maximum probable concentration - 766 ug/m³

Figure 4.1-1. Maximum Probable 3-Hour Average SO_2 Concentrations (ug/m³) Predicted for all Sources

KBN

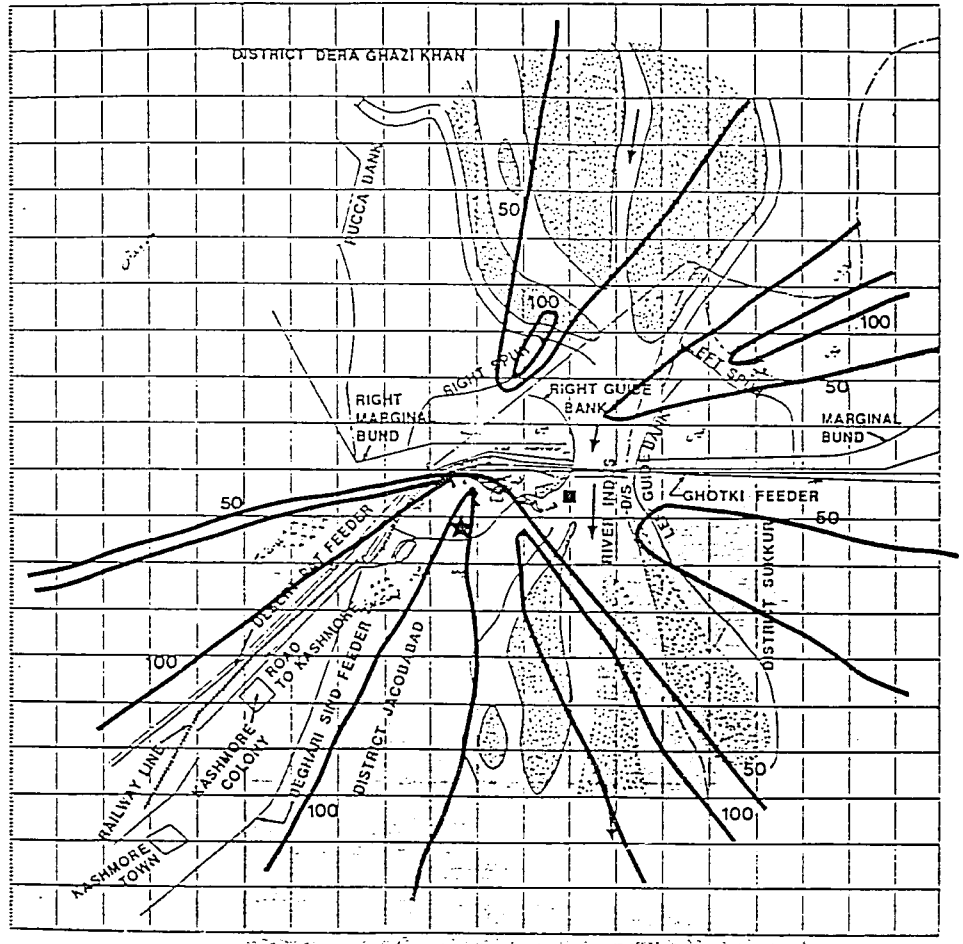

N

Scale
Each grid is
1 x 1 kilometer

★ Maximum probable concentration = 229 ug/m³

Figure 4.1-2. Maximum Probable 24-Hour Average SO_2 Concentrations (ug/m³) Predicted for all Sources

KBN

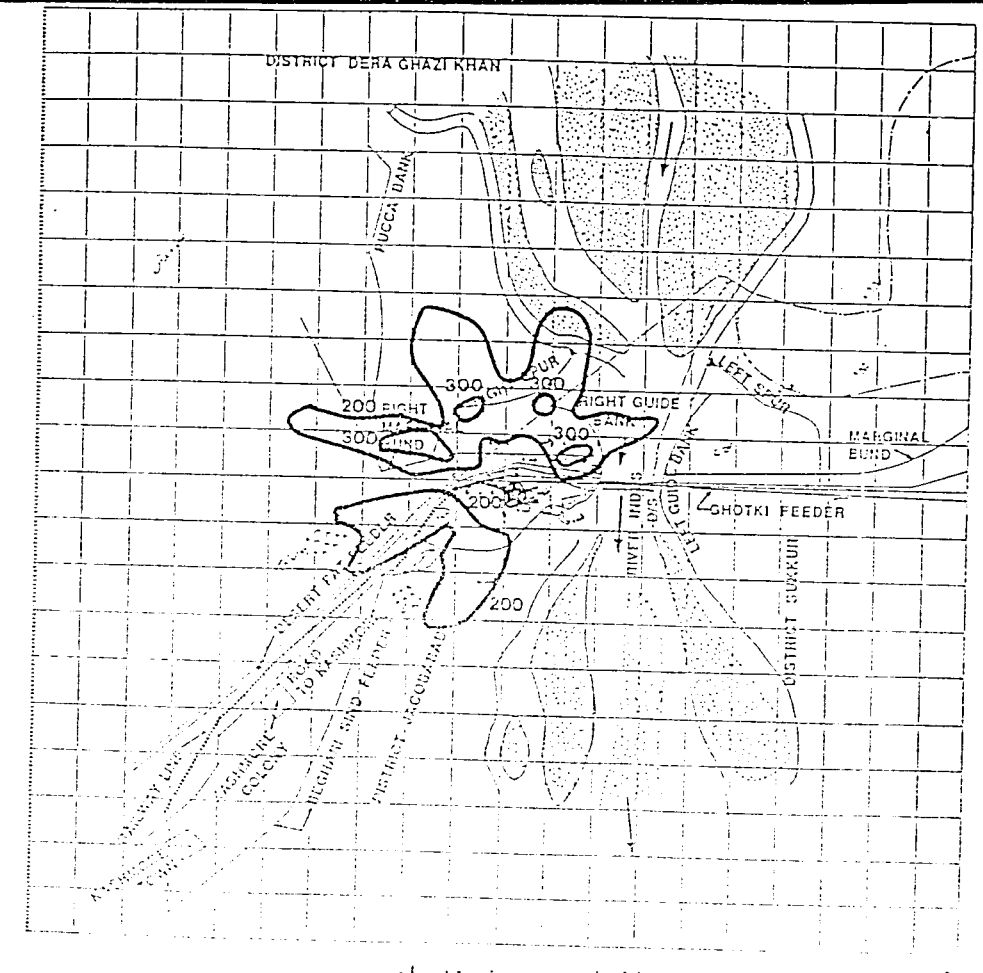

N

Scale
Each grid is
1 x 1 kilometer

* Maximum probable concentration - 371 ug/m³

Figure 4.1-3. Maximum Probable 3-Hour Average NO_2 Concentrations (ug/m³) Predicted for all Sources

KBRN

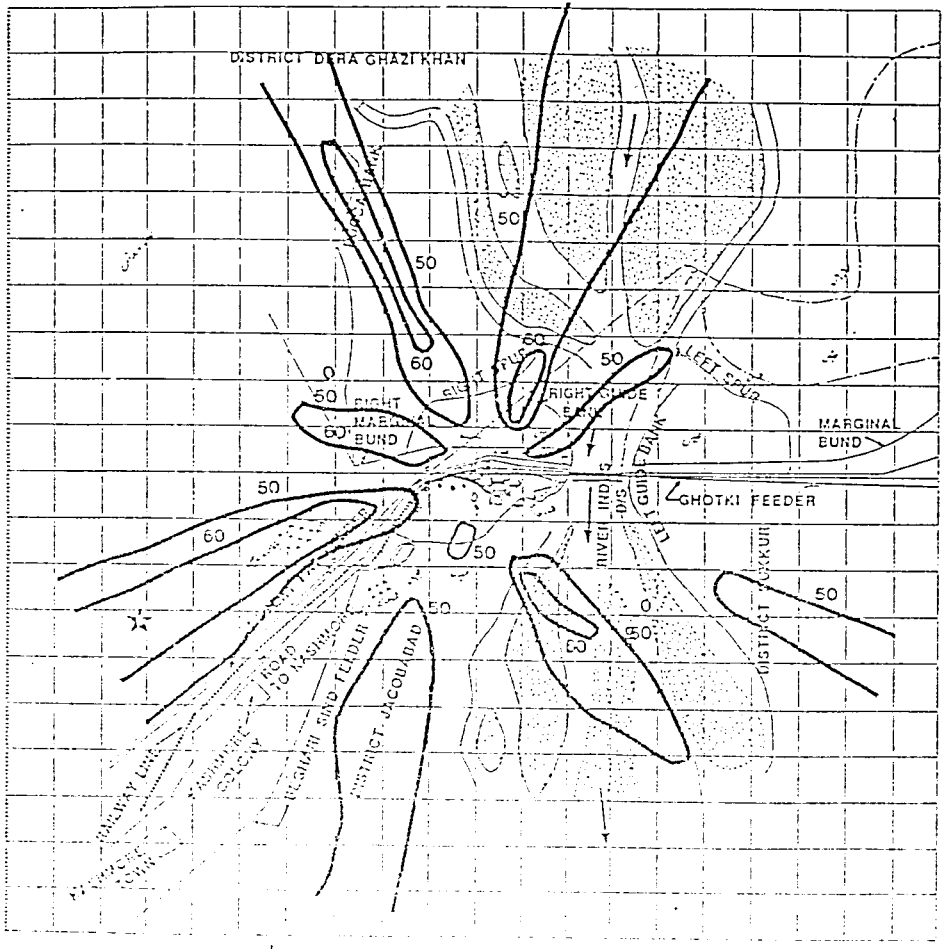

* Maximum probable concentration - 78 ug/m³

Figure 4.1-4. Maximum Probable 24-Hour Average NO_2 Concentrations (ug/m³) Predicted for all Sources

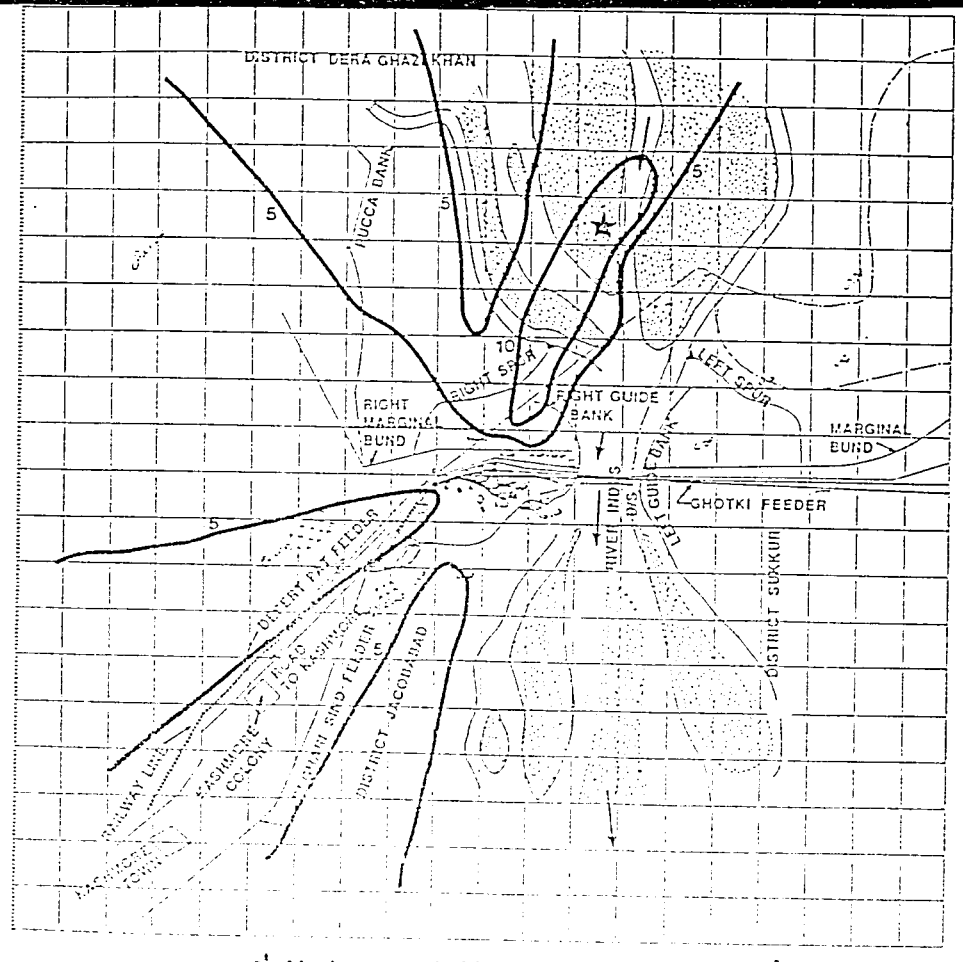

Scale
Each grid is
1 x 1 kilometer

☆ Maximum probable concentration - 12 ug/m³

Figure 4.1-5. Maximum Probable Annual Average NO_2 Concentrations (ug/m³) Predicted for all Sources

emissions. This is particularly true where very little environmental data exist, such as in Pakistan.

Maximum SO_2 and NO_x emissions from the Guddu power development, including the proposed 300 MW GTCC expansion, are estimated at 23,500 tons/yr and 35,000 tons/yr, respectively. Emissions were calculated assuming that fuel oil is burned continuously during two months of the year (December and January) in all existing and proposed units, and that natural gas is burned the remainder of the year. NO_x emissions were based upon natural gas usage for an annual period, a worst case emission assumption. Emissions by source grouping are as follows:

	SO_2	NO_x
Existing Steam Units 1-4	19,261 TPY	14,126 TPY
Existing GTCC Units 1-4	2,827 TPY	13,925 TPY
Proposed GTCC Units 4,5	1,414 TPY	6,963 TPY
TOTAL	23,502 TPY	35,014 TPY

Compared to major SO_2 sources in the U.S. and Canada, the Guddu power development is small in magnitude. For example, in the State of Florida alone, SO_2 emissions total over 900,000 tons/yr and NO_x emissions total over 800,000 tons/yr (FCG, 1986). The proposed GTCC Units 4 and 5 will increase existing emissions from the Guddu Power Development by about 6 percent for SO_2 and about 25 percent for NO_x.

Long-range transport studies performed in the southeastern U.S., which has a climate similar to that of Pakistan, suggest that SO_2 sources of the magnitude of Guddu can contribute only 1 percent or less to the total observed acidic deposition at a distance of 400 km from the source, and less than 0.1 percent at 800 km (adapted from FCG, 1986). NO_x sources of the magnitude would contribute about 1% of the observed acidic deposition within about 400 km from the source with substantial decreases in contributions at greater distances. In addition, prevailing winds in the Guddu area are from the northeast and southwest directions, and not towards India.

Based upon these considerations, the impact on acidic deposition of the Guddu power development, as well as the 300 MW Guddu expansion, is expected

BEST AVAILABLE DOCUMENT

to be insignificant. Significant transboundary environmental impact on Indian territory is not expected.

4.1.2 Noise

Noise levels projected to exist in the vicinity of the Guddu power development after the 300 MW GTCC expansion begins operating were predicted using standard noise estimating procedures (EEI, 1984). The predictions considered the existing baseline noise levels at Guddu, as determined from the ambient noise survey, and the predicted noise impact of the proposed 300 MW GTCC expansion. The predicted impacts due to the proposed units were developed by taking into account attenuation due to hemispherical spreading and atmospheric molecular absorption.

Sound propagates through the atmosphere in spherical waves, above the ground surface (referred to as hemispherical spreading). Since the surface area of a sphere is proportional to its radius squared, each doubling of the radius increases the surface area by a factor of four. Likewise, as the distance from a sound source is doubled, the intensity of its radiated sound energy is decreased by a factor of four.

Meteorological characteristics of the atmosphere result in "attenuation" of sound (i.e., a resultant decrease in the sound pressure level). When a direct path from the sound source to the observer does not exist, as in the case of a solid barrier, additional attenuation results from sound wave refraction around the obstacle.

Sound pressure levels associated with specific noise sources to be constructed as part of the proposed 300 MW expansion were estimated from the noise source survey conducted at Guddu (see Section 3.1.1.5) and from data contained in the Electric Power Plant Environmental Noise Guide (EEI, 1984). Listed in Table 4.1-9 are noise sources associated with the 300 MW GTCC expansion and estimated sound power levels. For most of the equipment, sound power levels were estimated from the on-site measurements at the existing Guddu GTCC installation. For other sources, data from the Environmental Noise Guide were used.

BEST AVAILABLE DOCUMENT

Table 4.1-9. Typical Plant Equipment Associated with the 300 MW GTCC Expansion and Estimated Noise Levels

Equipment Type	Sound Pressure Levels (dBA)	Reference
Power Block		
Gas Turbines (2)	100 (each)	On-site Measurement
Generators (2)	84 (each)	On-Site Measurement
Steam Turbine Generator (Outside Building)	79	On-Site Measurement
Heat Recovery Steam Generators (2)	80 (each)	On-Site Measurement
Transformers (3)	87 (each)	EEI, 1984
Cooling Water System		
Pump House	79	On-Site Measurement
Cooling Towers	102	EEI, 1984

Note: These are nearfield equipment emission levels and do not take into account building, atmospheric, or barrier attenuation or hemispherical spreading.

* Sound pressure level at 1.5 m (5 ft).

BEST AVAILABLE DOCUMENT

122

Ambient sound levels due to the 300 MW expansion only were then estimated. Several simplifying, conservative assumptions were made in arriving at the predicted levels. All noise sources were assumed to be co-located at the approximate center of the 300 MW expansion site. All sources were also assumed to operate continuously 24 hours per day. In addition, attenuation due to barriers, trees or other obstacles was not considered. The predicted noise levels (dBA) due to the 300 MW GTCC expansion only are shown in Figure 4.1-6.

In order to predict future noise levels with the 300 MW GTCC expansion in operation, the estimated noise levels due to the proposed 300 MW expansion only (Figure 4.1-6) were added to the estimated baseline noise levels at Guddu (Figures 3.1-4 and 3.1-5). The resulting noise contours for the Guddu area are presented in Figures 4.1-7 and 4.1-8.

It should be noted that the predicted noise levels (dBA) from the proposed 300 MW GTCC expansion are not strictly additive because dBs are measured in a logarithmic scale. For example, a 50 dBA L_{eq} or L_{dn} sound pressure level from the proposed expansion would add only 3 dBA to an existing baseline sound pressure of 50 dBA and would add only 0.4 dBA to an existing baseline level of 60 dBA.

In terms of $L_{eq}(24)$ noise levels, comparison of the baseline and future levels shows that there is no significant change in levels over most of the Guddu area. Significantly increased noise levels are predicted only in the immediate area of the 300 MW GTCC expansion site. In this area, up to a 5 dBA rise is predicted to occur beyond the site boundary.

Review of Figure 4.1-2 shows that there are no schools or educational institutions located in the areas predicted to exceed the 55 dBA World Bank guideline [$L_{eq}(24)$] for educational institutions (see Table 4.1-10). Several mosques are located in the exceedance areas, but actual noise levels inside these mosques should be much lower due to attenuation from the walls of the mosques. No areas outside of the power plant facilities are predicted to exceed the 70 dBA guideline to protect against hearing loss.

BEST AVAILABLE DOCUMENT

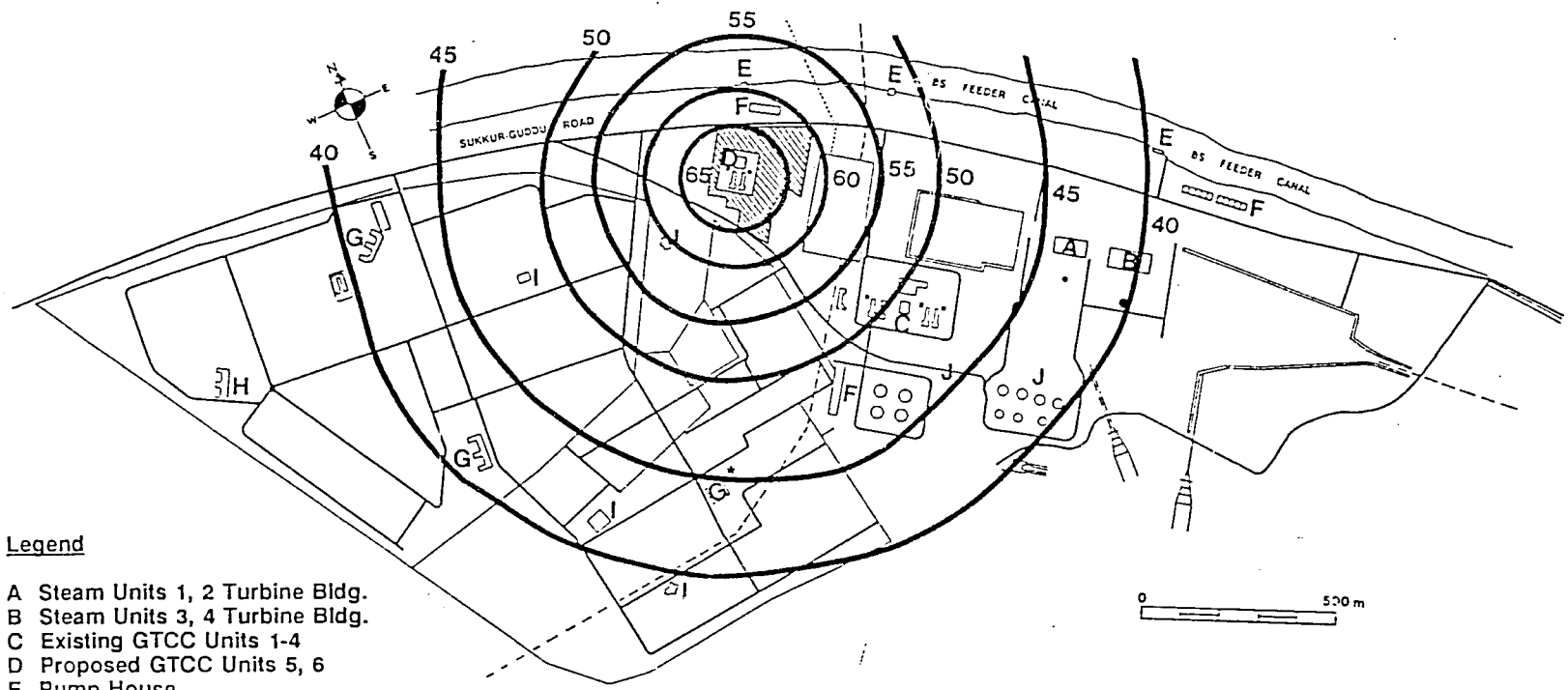

Legend

A Steam Units 1, 2 Turbine Bldg.
B Steam Units 3, 4 Turbine Bldg.
C Existing GTCC Units 1-4
D Proposed GTCC Units 5, 6
E Pump House
F Cooling Towers
G School
H Hospital
I Mosque
J Gas Mixing/Reducing Areas
-- Existing 500 KV line
... Proposed 500 KV line
* Planned

Figure 4.1-6. Predicted Noise Impact (dBA) of the Proposed 300 MW GTCC Expansion Only

KBN

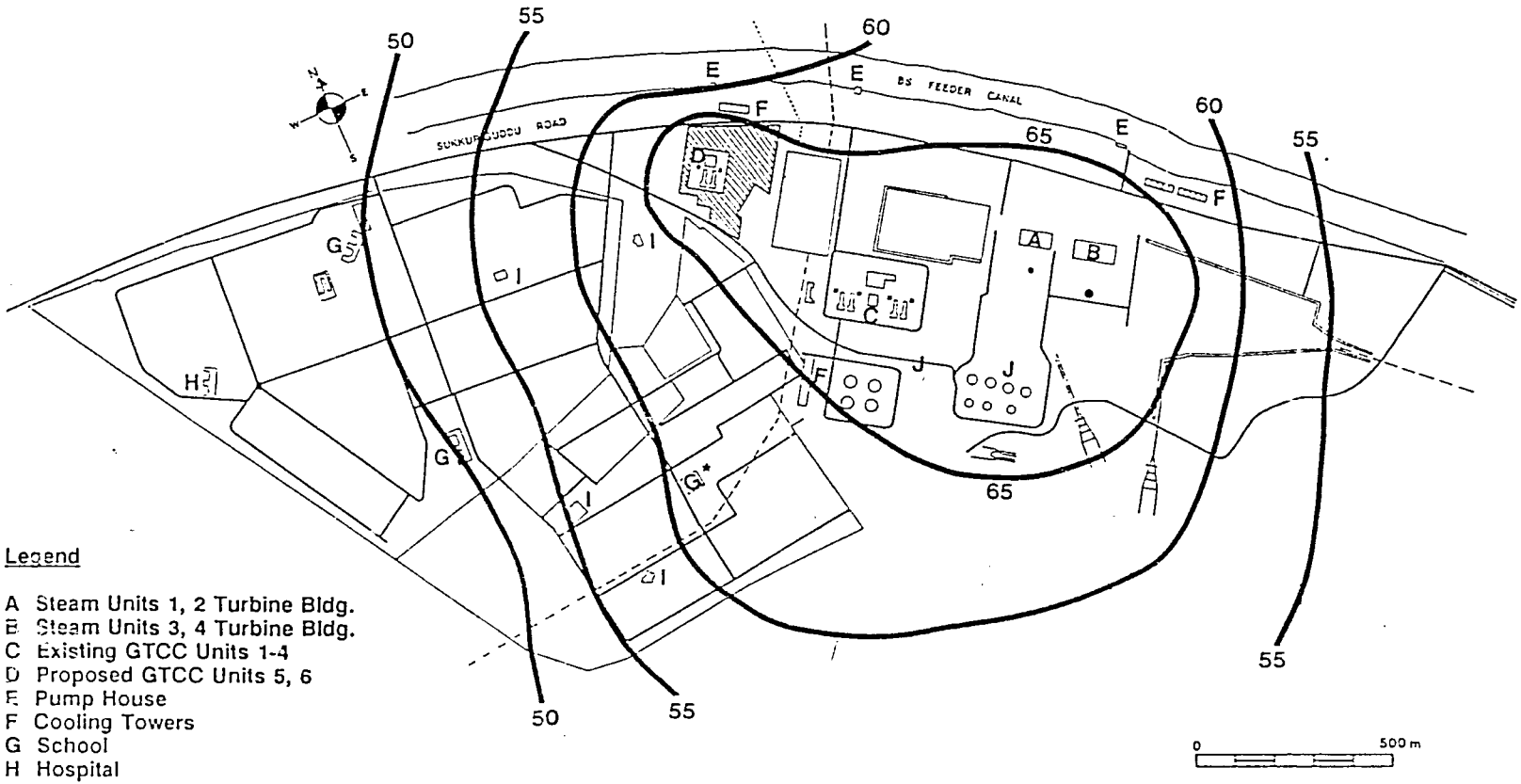

Figure 4.1-7. Predicted Future L_{eq} (24) Noise Levels (dBA) with Proposed 300 MW GTCC Expansion, Guddu Power Development

KBN

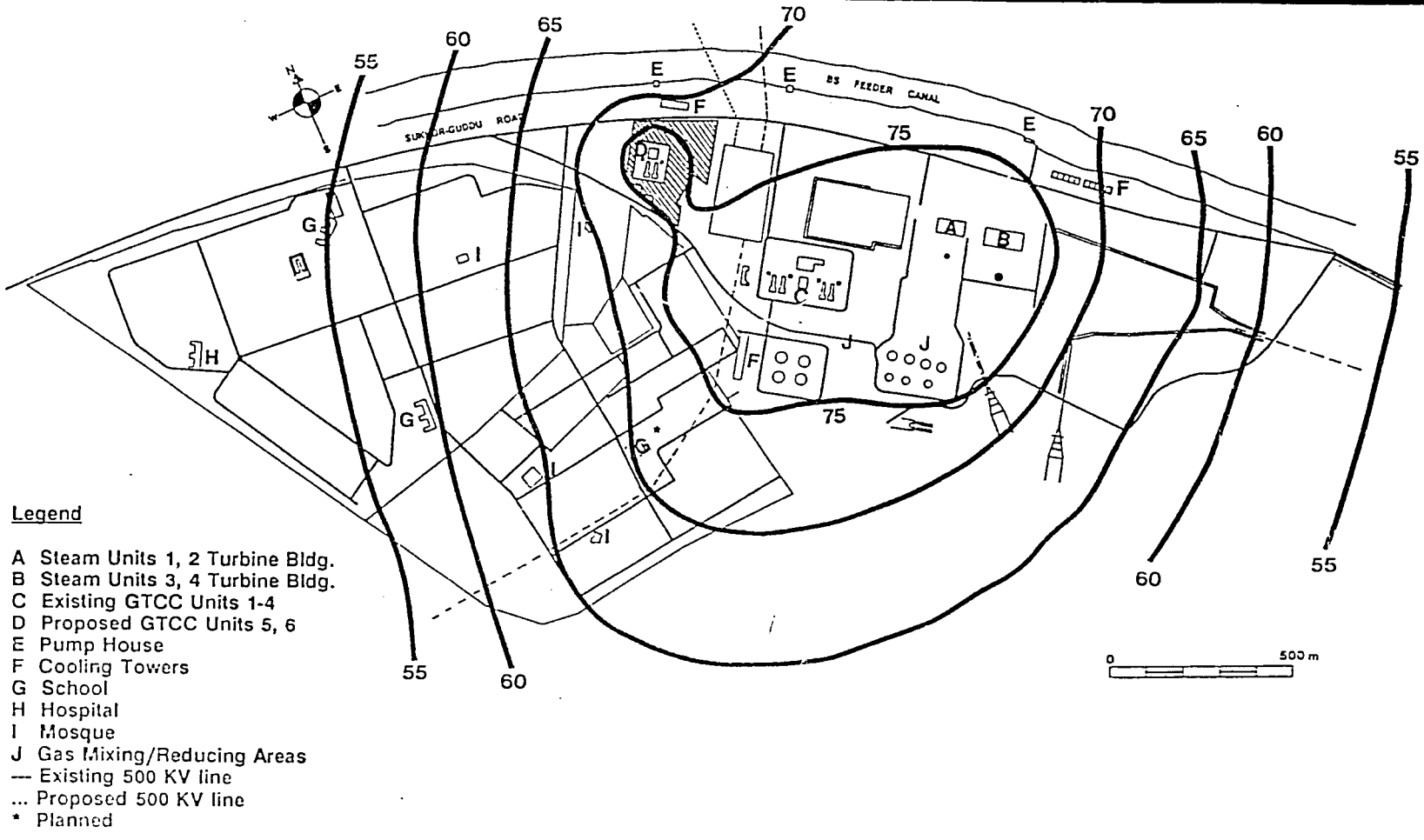

Figure 4.1-8. Predicted Future L_{dn} Noise Levels (dBA) with Proposed 300 MW GTCC Expansion, Guddu Power Development

KBN

Table 4.1-10. World Bank Noise Guidelines*

		Indoor			Outdoor		
	Measure+	Activity Interference	Hearing Loss Consideration	To Protect Against Both Effects (b)	Activity Interference	Hearing Loss Consideration	To Protect Against Both Effects (b)
Residential with Outside Space and Farm Residences	L_{dn}	45		45	55		55
	$L_{eq}(24)$		70			70	
Residential with no Outside Space	L_{dn}	45	45				
	$L_{eq}(24)$		70				
Commercial	$L_{eq}(24)$	(a)	70	70(c)	(a)	70	70(c)
Inside Transportation	$L_{eq}(24)$	(a)	70	(a)			
Industrial	$L_{eq}(24)$(d)	(a)	70	70(c)	(a)	70	70(c)
Hospitals	L_{dn}	45		45	55		55
	$L_{eq}(24)$		70			70	
Educational	$L_{eq}(24)$	45		45	55		55
	$L_{eq}(24)$(d)		70			70	
Recreational Areas	$L_{eq}(24)$	(a)	70	70(c)	(a)	70	70(c)
Farm Land and General Unpopulated Land	$L_{eq}(24)$				(a)	70	70(c)

Code:

a. Since different types of activities appear to be associated with different levels, identification of a maximum level for activity interference may be difficult except in those circumstances where speech communications is a critical activity.

b. Based on lowest level.

c. Based only on hearing loss.

d. An $L_{eq(S)}$ of 75 dB may be identified in these situations so long as the exposure over the remaining 16 hours per day is low enough to result in a negligible contribution to the 24-hour average, i.e., no greater than an L_{eq} of 60 dB.

* Yearly average equivalent sound levels required for protection of public health and welfare.

\+ L_{dn} = Day-night average A - weighted equivalent sound level, with a 10-decibel weighting applied to night time levels.

L_{eq} (24) = Equivalent A-weighted sound level over 24 hours.

Source: World Bank, 1984.

The predicted future L_{dn} noise levels at Guddu (Figure 4.1-3) show that residential areas nearest to the power plant facilities may exceed the World Bank guideline of 55 dBA for residential areas. This could be of concern, since most of the residences are not air conditioned and windows are frequently left open for ventilation, thus minimizing attenuation.

Review of the baseline L_{dn} levels (Figure 3.1-3) shows that the area exceeding 55 dBA is only slightly increased due to the proposed expansion. Noise levels are predicted to significantly increase only in areas immediately adjacent to the 300 MW expansion site, primarily to the north and east of the site, since the proposed GTCC units will be located near the western boundaries of the site. The maximum ambient noise levels in this area are predicted to increase by no more than 5 dBA.

4.1.3 Water Resources

4.1.3.1 Water Withdrawals and/or Consumptive Uses

Water withdrawals for the proposed 300 MW combined cycle expansion include once-through condenser cooling water, cooling tower makeup, plant service water and potable water. The primary supply source will be the Indus River via the B.S. Feeder Canal. Locations of existing and proposed withdrawal facilities are shown in Figure 2.4-1. (Discharge facilities and related impacts are discussed in the following sections.)

The largest water demand for the combined cycle operation is condenser cooling. To satisfy this demand, the proposed expansion will have and utilize facilities for both once-through and cooling tower operation.

During the preponderance of the year, once-through condenser cooling water will be withdrawn from the Indus River (via the B.S. Feeder Canal) upstream of the Guddu Barrage, used for once-through condenser cooling, and discharged downstream of the Guddu Barrage (see Figure 2.4-1).
During once through cooling operations of the proposed 300 MW expansion, the same volume of water will be released from the barrage to the Indus River as is currently released; a portion of that released water will be diverted and used for condenser cooling prior to discharge to the Indus River. this is identical in function to the circulating cooling water systems for the

existing units. Given the location and proximity of the proposed site to the Indus River (see Figure 2.4-1), the temporary diversion of water through the proposed power plant and subsequent discharge back to the Indus River below the Barrage will not significantly effect the total quantity of water released from the barrage to the Indus River.

For comparison, the maximum once through cooling demand for the proposed 300 MW expansion is 458 cubic meters/minute or 7.63 cubic meters/second. Average Indus River flow during the period of April 1987 through March 1988 was 2694 cubic meters/second. Thus, diversion of the required 7.63 cubic meters/second represents approximately 0.3% of the average Indus River flow. Given that this water will be immediately returned to the Indus River, use of Indus River waters for once through cooling during high or average flow conditions will have no adverse impact on local or regional water quantity availability.

To avoid regional or local water supply impacts during critical low flow conditions, cooling towers will be utilized for condenser cooling. (The existing units utilize cooling towers in a similar manner to minimize low flow impacts.) As previously noted in Table 3.1-18, the use of cooling towers for condenser cooling reduces the total water demand by approximately 92%.

The greatest potential for adverse water quantity impact is during these critical low flow conditions. During these periods, approximately 43.4 cubic meters/minute or 0.723 cubic meters/second will be withdrawn for cooling tower makeup, plant services and potable requirements; only 11.7 cubic meters/minute or 0.195 cubic meters/second will be discharged. The difference between total withdrawal and total discharge (0.528 cubic meters/second) represents the consumptive use of the proposed 300 MW expansion during these critical low flow periods.

To determine worst case conditions for assessing consumptive use impacts, an Extreme Value Type III (Weibull) statistical analysis of low flow conditions was performed. Based on this statistical analysis and utilizing the minimum Indus River flow data previously presented in Table 3.1-15, the 1 day-10

year and 1 day-25 year low flow for the Indus River below the barrage were estimated to be 181 and 129 cubic meters/second, respectively.

Therefore, the 0.528 cubic meters/second consumptive use of the proposed 300 MW expansion will result in a maximum reduction of 0.29% of the 1 day-10 year low flow and in a maximum reduction of 0.41% of the 1 day-25 year low flow. Given these analyses, worst case consumptive use by the proposed 300 MW expansion will have virtually no impact on low flow conditions in the Indus River.

If proposed 300 MW expansion will employ an alternative circulating water discharge back to B.S. Feeder Canal, the discharge should be located so as to allow sufficient mixing or cooling to avoid recirculation of heated effluent. Alternative discharge locations on the B.S. Feeder Canal are shown in Figure 2.4-1. Given the relatively small size and volume of the B.S. Feeder Canal and the limited locations available for the return discharge with respect to the circulating water intake, entrainment and recirculation of heated waters will probably preclude the usefulness of this return system for the once through cooling operations. However, for cooling tower blowdown (a substantially smaller wastewater volume), such a return/reuse system could allow reuse of certain plant wastewaters and further reduce the water supply demands during low flow conditions.

Given that the proposed 300 MW expansion will use an existing canal for water supply, the expansion will not cause or contribute to any soil waterlogging or salinization.

4.1.3.2 Cooling Water Discharges

During the preponderance of the year, the largest discharge from the proposed combined cycle operation will be heated, once-through condenser cooling. As previously discussed in Subsection 3.1.2.1, the existing steam and GT/HRSG unit also discharge heated once-through cooling water to the Indus River downstream of the Guddu Barrage. Existing and proposed discharge facilities locations are shown in Figure 2.4-1.

The periods of once-through operations will correspond with periods of average or high flows and water availability in the Indus Rivers. During these periods, the heated, once-through discharge will be diluted substantially by the Indus River flow.

The mixing and dispersion of these once-through discharges to the Indus River, and resulting water quality impacts were estimated using a dispersion model presented by Fischer et al. (1979). The model methodology and the related assumptions are presented in Appendix A.

To execute the dispersion analysis, the various model parameters and coefficients were estimated based on available data and information. For the purposes of this analysis, the water quality parameter of interest (i.e, temperature) was considered to be a conservative parameter. As there will be some radiant or evaporative cooling within the discharge ditch and plume areas, this assumption is a conservative assumption as it over estimates the magnitude of the impact.

Once-through cooling impact modeling conditions were estimated based on the median flow conditions observed during the period April 1987 through March 1988. To address the impact of the proposed expansion on the existing conditions, the proposed expansion heated effluent concentration was assumed to be 100% and background concentration (including the heated effluent from the existing units) was assumed to be 0%. The results of these analyses are presented in detail in Appendix A.

Based on these modeling analyses, the once-through circulating water discharges will be quickly diluted by Indus River flows. For example, at a distance of 1000 meters from the point where the circulating water return ditch enters the Indus River, the maximum temperature increase within the plume will be 21.5% of the initial discharge temperature increase. Thus, if temperature increase across the condensers of the proposed expansion is 7.5°C (the design condition), then the temperature increase at 1000 meters downstream will be 1.6°C. At 4500 meters downstream, the temperature increase at 1000 meters downstream will be 10.1% of the initial discharge

temperature increase or approximately 0.75°C increase. In both cases, the discharge plume will impact less than 10% of the total Indus River width.

With respect to the World Bank Industrial Effluent Guideline of a 3°C increase in water temperature, this standard is met approximately 450 meters downstream.

Based on the available data and the impact analysis presented herein, it is anticipated the once through cooling operations of the proposed 300 MW expansion will not significantly increase the temperature of Indus River, or impair or interfere with any existing or anticipated future beneficial use of these waters. This is because of the comparatively high river flows which will quickly dilute all once though discharges.

During critical low flow conditions, cooling towers will be utilized for condenser cooling. During these critical conditions, cooling tower operation will significantly decrease cooling discharges. Based on the previously presented discharge date, the use of cooling towers for condenser cooling reduces the total cooling related discharges by approximately 99.7%. Therefore, cooling tower operations will not have any adverse operational impact on the Indus River.

4.1.3.3 Low Volume (Plant) Wastewater Discharges

Power plant low volume wastes include floor drain wastes, boiler blowdown, softener regeneration brines, filter backwash, and clarifier sludges. The physical and chemical composition of liquid waste materials associated with power plant operation is determined by several factors, including:

1. Chemical and physical properties of the fuel burned,
2. Type of boilers installed,
3. Waste treatment prior to disposal, and
4. Circulation/reuse of wastes.

These processes are plant-specific and vary significantly from plant to plant. As a result, chemical constituents present in the waste materials, and hence the quality of the waste streams, are also plant specific.

Table 4.1-11 presents a list of compounds commonly found in power plant wastewater effluents by waste stream. The information in this table was compiled during and industry-wide sampling program conducted at power plants throughout the United States by the U.S. Environmental Protection Agency (USEPA). Samples were analyzed for 129 compounds designated by USEPA as Priority Pollutants (USEPA, 1982).

Since recirculating cooling systems concentrate the dissolved solids present in the make-up water, concentration increases are to be expected. Of the pollutants detected as net discharges, the net concentration increase in cooling tower blowdown exceeded 0.1 milligrams per liter (mg/L) only for cadmium, copper, cyanide, lead, and zinc. According to the USEPA study, net discharges of metals other than chromium and zinc are the result of corrosion of metal surfaces within the cooling water system. Higher levels of chromium and zinc often result from the use of corrosion control additives. The use of non-oxidizing biocides and other chemical additives listed in Table 4.1-12 may explain the presence of many other compounds detected in power plant effluents. Low volume wastes as referenced in Table 4.1-12 include boiler blowdown, waste streams from water treatment, and effluence from floor and yard drains.

Boiler blowdown serves to maintain specified design limitations for dissolved and suspended solids. Primary sources of impurities in the blowdown are internal corrosion of the boiler and chemicals added to the boiler system to control scale formation, corrosion, pH, and solids deposition. Products of boiler corrosion are soluble species of iron, copper, and other metals. In addition to chemical additives listed in Table 4.1-13, the following proprietary chemicals may contribute chromium, copper, and phenol species to the boiler blowdown:

Nalco 37--contains chromium

Nalco 75--contains phenol

Nalco 425L--contains copper

Calgon CL35--contains sodium dichromate

In general, boiler blowdown is usually of high quality (see Table 4.1-13).

Table 4.1-11. Priority Pollutants* Detected in USEPA Sampling Program by Waste Stream Sources

Priority Pollutant	Waste Stream Source+	
	Cooling Tower Blowdown	Low Volume Waste**
1,2-Dichloroethane	0	X
1,2-Dichlorobenzene	0	X
Phenol	X	X
Toluene	X	X
Beryllium (Total)	X	0
Cadmium (Total)	X	X
Chromium (Total)	X	X
Copper (Total)	X	X
Cyanide (Total)	X	X
Lead (Total)	X	X
Nickel (Total)	X	X
Selenium (Total)	X	X
Zinc (Total)	X	X

* Only compounds for which the increases in net discharges were greater than 10 micrograms per liter (ug/L).

\+ X - Present in greater concentration in the effluent than in the influent at least once.
0 - Never present in greater concentration in the effluent than in influent.

** Low volume wastes include boiler blowdown, waste streams from water treatment, and effluent from floor and yard drains.

Source: USEPA, 1982.

Table 4.1-12. Proprietary Chemicals Used by Power Plants and Containing USEPA Priority Pollutants

Proprietary Chemical (point of application*)	Specific USEPA Priority Pollutant Contained in Product
Nalco Chemicals	
25L (CT)	Copper
37 (BW)	Chromium
38 (CW)	Chromium
75 (BW)	Phenol
201 (CT)	Chlorinated Phenols
344 (CT)	Acrylonitrile
375 (CW)	Chromium
425L (BW)	Copper
Calgon Chemicals	
CL-70 (CT)	Zinc Chloride
CL-35 (BW)	Sodium Dichromate
CL-68 (CW)	Sodium Dichromate, Zinc Chloride
Dearborn Chemicals	
712 (CW)	Chlorinated Phenols
Betz Chemicals	
Betz 40P (CW)	Chromate and Zinc Salts
Betz 403 (CW)	Chromate and Zinc Salts
Dianodic 191 (CW)	Chromate and Zinc Salts
Dow Chemicals	
Dowicide GB (Algacide)	Chlorinated Phenols
Hercules Chemicals	
CR 403 (CT)	Zinc Dichromate, Chromic Acid
DuPont	
Karmex (CW)	Chlorinated Phenols
Drew Chemicals	
Biosperse 201 (CW)	Chlorinated Ethanes
Ashland Chemicals	
1,1,1-Trichloroethane (FA)	Chlorinated Ethanes
Burris Chemicals	
Sodium Dichromate (CT)	Sodium Dichromate

* Point of Application: BW - Boiler Water; CT - Cooling Tower; CW - Cooling Water; FA - Fuel Additive.

Source: USEPA, 1982.

BEST AVAILABLE DOCUMENT

Table 4.1-13. Boiler Blowdown Characteristics

Pollutants	Mean Concentration (mg/L)	Standard Deviation	Number of Observations
Copper	0.14	0.2888	[illegible]
Iron	0.53	2.0409	[illegible]
Oil & Grease	1.74	4.5311	[illegible]
Phosphorus	17.07	12.5154	[illegible]
Suspended Solids	66.26	500.3962	[illegible]

Source: USEPA, 1982.

BEST AVAILABLE DOCUMENT

Demineralizer waste regenerants will be routed to [illegible] waste evaporation pond. This waste stream consists [illegible] solutions containing the chemical [illegible] water. The waste stream is usually characterized by [illegible] (<2 to >10), high dissolved solids (2,000 to 10,000 mg/L) [illegible] solids concentrations ranging from <5 to about 200 mg/L. [illegible] concentrations are dependent on the characteristics of the influent [illegible]

The proposed 300 MW expansion will incorporate [illegible] to treat low volume wastes prior to discharge. This basin will [illegible] volume wastes by: sedimentation; flow equalization; and mixing and [illegible]. This treatment will effective reduce the pollutant [illegible] individual waste stream. Treated low volume [illegible] discharged at circulating water discharge outfall and [illegible] mixing water discharge or cooling tower blowdown.

Given this treatment and immediate mixing, [illegible] potential for adverse impact associated with low volume [illegible]. To assess any potential for adverse impact, the mixing [illegible] of low volume waste pollutants after discharge to the [illegible] estimated using a the previously described Fischer [illegible] model.

Low volume wastewater impact modeling conditions [illegible] based on the median flow conditions observed during the period [illegible] March 1988 and the calculated 1 day - 10 year low flow. [illegible] flow conditions, low volume wastewater impacts on [illegible] (and the associated mixing and dispersion) were [illegible] with the circulating water discharge. For the 1 day - 10 year [illegible] low volume wastewater impacts on the Indus River (and the [illegible] and dispersion) were estimated based on dilution with the [illegible] blowdown discharge.

To address the impact of the increased low volume [illegible] with proposed expansion) on the existing conditions, [illegible] volume wastewater concentration (associated with proposed [illegible] assumed to be 100% and background concentration (including [illegible] water

BEST AVAILABLE DOCUMENT

140

from the existing units) was assumed to be 0%. [illegible] analyses are presented in detail in Appendix A.

Based on these modeling analyses, there [illegible] will be quickly diluted by Indus River flows. Under the [illegible] scenario, at a distance of 1000 meters from the point where the [illegible] wastewater discharge enters the Indus River, the [illegible] concentration within the plume will be 0.87% of [illegible] pollutant concentration; this reflects a dilution [illegible] pollutants of over 200 to 1. At a distance of [illegible] point where the treated low volume wastewater [illegible] River, the maximum pollutant concentration within the [illegible] of the treated wastewater pollutant concentration; this reflects [illegible] of any remaining pollutants of over 475 to 1.

Under the 1 day - 10 year low flow scenario [illegible], at a distance of 1000 meters from the point where [illegible] wastewater discharge enters the Indus River, [illegible] concentration within the plume will be [illegible] pollutant concentration; this reflects a dilution of [illegible] pollutants of approximately 25 to 1. At a distance of [illegible] from the point where the treated low volume wastewater [illegible] Indus River, the maximum pollutant concentration [illegible] will be 1.7% of the treated wastewater pollutant concentration; [illegible] dilution of any remaining pollutants of approximately [illegible] to 1.

Based on the available data and the impact analysis [illegible], it is anticipated the discharge of treated low volume [illegible] the proposed 300 MW expansion will not significantly [illegible] increase water quality concentrations of Indus River, or impair or [illegible] with any existing or anticipated future beneficial use of [illegible] is because of the use of a treatment basin to remove pollutants prior to discharge and comparatively high river flows which [illegible] any remaining pollutants in the treated wastewater.

BEST AVAILABLE DOCUMENT

Based on review of existing waste treatment [illegible] modifications for the 300 MW expansion [illegible] improve basin performance and operation. [illegible] Control Baffle (floating or fixed) near the basin outlet [illegible] control and limit the discharge of any floating [illegible] basin due to routine operations or spills. In addition, [illegible] associated outlet flange and valve would [illegible] of accumulated settleable solids. Finally, [illegible] at the discharge would allow the cessation of [illegible] highly toxic material were spilt and entered [illegible] treatment system. The treatment basin could [illegible] pollutant removed prior to further discharge. [illegible] would significantly improve the performance of [illegible].

4.1.3.4 Seasonal Flooding of Indus River

As previously noted, Indus River flow is [illegible]. Statistical analyses of these annual flood flows [illegible] performed using a log-Pearson Type III [illegible]. This technique is widely used by the U.S. Geological [illegible] of recurrence intervals for extreme (maximum) [illegible] of these statistical analyses are presented in [illegible] and elevations upstream of the Guddu Barrage and in [illegible] flows and flood elevations downstream of the Guddu Barrage.

Given that the finished grade elevation [illegible] will be approximately 80 meters MSL, the [illegible] adversely affected by flood elevations in the Indus River. [illegible] boundary, the expansion site is protected by [illegible] the associated flood control bund, and the bund and [illegible] separating the B.S. Feeder Canal and the Indus River. On the [illegible] southern site boundaries, the site is protected is controlled by [illegible] bund.

Even if substantial seepage through these bunds [illegible] site elevation of approximately 80 meters MSL is [illegible] year flood elevation above or below the Guddu Barrage.

BEST AVAILABLE DOCUMENT

141

Table 4.1-14. Summary of log-Pearson Ty[illegible]
Flows and Flood Elevations [illegible]
of Guddu Barrage.

Recurrence Interval	Peak Flow Upstream of Guddu Barrage (meters^3/sec)	Peak Flow Upstream of Guddu Barrage (feet^3/sec)	[illegible]	[illegible]
1 in 10 Year	28,570	1,008,000	[illegible]	[illegible]
1 in 25 Year	33,970	1,1[illegible],000	[illegible]	[illegible]
1 in 50 Year	37,980	1,341,200	[illegible]	[illegible]
1 in 100 Year	42,000	1,483,000	79.[illegible]	[illegible]

BEST AVAILABLE DOCUMENT

14

Table 4.1-15. Summary of log-Pearson Type [illegible]
Flows and Flood Elevation[illegible]
of Guddu Barrage.

Recurrence Interval	Peak Flow Downstream of Guddu Barrage (meters^3/sec)	Peak Flow Downstream of Guddu Barrage (feet^3/sec)	[illegible]	[illegible]
1 in 10 Year	28,150	993,[illegible]	[illegible]	[illegible]
1 in 25 Year	33,810	1,194,000	[illegible]	[illegible]
1 in 50 Year	38,070	1,344,300	[illegible]	[illegible]
1 in 100 Year	42,350	1,495,500	[illegible]	[illegible]

BEST AVAILABLE DOCUMENT

Based on these design considerations and [illegible] expansion will not be adversely effected by [illegible] River.

4.1.3.5 Domestic Wastewater From WAPDA Colony

The proposed 300 MW expansion will result in [illegible] within WAPDA colony and, therefore, increased [illegible].

Currently, wastewater from the WAPDA colony [illegible] discharge to a series of off-site ponds. [illegible] sedimentation, bacteriological decomposition [illegible] of sanitary wastewaters. If properly designed [illegible] and [illegible] facultative and maturation ponds are an appropriate [illegible] for the sanitary sewage treatment in this area.

As previously noted, the existing domestic [illegible] disposal system currently has several significant problems [illegible] into adjacent surface drainage system, subsequent [illegible] water and annual flooding and/or erosion of the [illegible] dikes. Due to these various problems, [illegible] and groundwater contamination complaints by [illegible].

Recent improvement of the wastewater ponds and associated [illegible] contained the direct surface discharge of sewage. [illegible] the site topography in the immediate vicinity of the ponds, [illegible] sewage still seeps out through the pond [illegible] the surface water course. Villagers still complain [illegible] and groundwater contamination (e.g., sewage smell [illegible]). The existing ponds are located outside of the 80 meter [illegible] bund which protects the existing site and colony, and therefore [illegible] subject to routine (annual) flooding.

Alternative solutions to the continuing seepage problem [illegible] ponds include the following:

BEST AVAILABLE DOCUMENT

1. Relocate the pond further from any [illegible] which would result in seepage or [illegible] water to inhabited areas;
2. Increase berm thickness to decrease [illegible] surface water course;
3. Install a secondary berm outside of [illegible]; this secondary berm would collect [illegible] pond and primary berm. This secondary [illegible] and seepage into the existing [illegible] improperly treated sewage to [illegible]
4. Line the primary pond berm with [illegible] or eliminate seepage to adjacent [illegible]
5. Increase primary pond berm elevation [illegible] control elevation to 80 meters to prevent [illegible] wastewater treatment pond during flood stages [illegible] In this case, the sewer system within [illegible] surveyed to be certain that system elevations [illegible] allow proper sewer functioning in the event of [illegible] control elevation of 80 meters MSL; and
6. Rip-rap the outside of pond dikes [illegible] flood stages. In addition, a [illegible] implemented to repair and/or rebuild the pond dikes [illegible] damage.

Any modifications to the existing ponds [illegible] to adequacy of the existing ponds with regard to [illegible] criteria. Any redesign and or reconstruction of the [illegible] wastewater treatment ponds should consider the [illegible] wastewater flows from the WAPDA colony. A [illegible] facultative pond and two maturation ponds [illegible] is discussed in Section 5.5.

4.1.3.6 Site Runoff

Given the extremely low rainfall in the region, [illegible] potential for the generation of any significant [illegible] runoff. Any runoff which does occur will quickly runoff [illegible] and quickly infiltrate into the porous soil. In [illegible]

BEST AVAILABLE DOCUMENT

rainfall, any runoff which does not immediately [illegible] porous soil will be contained behind the flood [illegible] there until it infiltrates. There is very [illegible] impact due to stormwater runoff.

4.1.3.7 Oil Spill Prevention, Containment and Control

The existing GTCC units have a four tank-farm [illegible] oil tank is located within a containment cell [illegible] concrete wall and earthen berm. Each containment [illegible] trench and recovery pump for containment of spills [illegible] containment cell has been designed to provide [illegible] contain the entire volume of the tank, the structural [illegible] berm creating the perimeter of the cell is [illegible]

For small leaks or spills, the recovery [illegible] adequate to control any materials. In the [illegible] ture or other catastrophic tank failure, such a large spill [illegible] the earthen cell berm to fail. In this case, [illegible] would be discharged for the containment cell [illegible]

However, due to the pervious nature of [illegible] would infiltrate quickly into the ground [illegible] ground surface. In the event of such a spill [illegible] the impacts should be evaluated, the long-term [illegible] of surface or ground water resources [illegible] plans made.

In the event that any of this spilled oil [illegible] the 80 meter MSL flood protection bund will prohibit [illegible] the Indus River. In such an event, any oil which [illegible] into the ground will be retained behind the bund until [illegible] Given these circumstances, there is very little [illegible] the Indus River due to a catastrophic tank failure [illegible] GTCC tank farm.

BEST AVAILABLE DOCUMENT

141

A preferable design for the retention cell would [illegible] structurally adequate berm or wall around the [illegible] could have been accomplished by constructing a [illegible] the interior cell walls) around the entire perimeter.

Whereas the current design is not a preferred or optimal design, major or minor tank leaks or catastrophic tank failure [illegible] oil contamination of the Indus River. Any ground water [illegible] resulting from such leaks or failures should be assessed.

Any future tank farms required by the 300 MW expansion [illegible] located so they do not threaten usable surface or ground water [illegible] future retention cells should incorporate a structurally [illegible] wall.

4.1.3.8 Ground Water Resources

Ground water resources are not widely used at the [illegible] the highly mineralized nature of the ground water, no large [illegible] is anticipated. As previously noted, ground water [illegible] with the proposed 300 MW expansion will be very limited. [illegible] highly mineralized nature of groundwater at the [illegible] and use will be limited to an alternative supply [illegible] up. Such withdrawals will be very seasonal and [illegible] ration.

Given the porous and interconnected nature of the ground water systems, any withdrawals will be recharged from the adjacent [illegible] diately or during the subsequent flood season.

Therefore, the ground water withdrawals associated with [illegible] proposed power plant construction and operation will not have an [illegible] ground water resources in the immediate site vicinity. The [illegible] will have no impact on the regional problems of [illegible] ation.

4.1.3.9 Geology and Seismology

Given that the proposed site is located in an area [illegible] Zone 1 as defined by the Uniform Building Code of the Intern[illegible] of Building Officials. As such, all work associated [illegible] 300 MW

BEST AVAILABLE DOCUMENT

148

expansion shall be engineered, designed and [illegible] with Zone 1 seismic requirements. Therefore, [illegible] impacts due to seismology.

There will be no other impacts to geology due to the [illegible] MW expansion construction or operation.

4.2 ECOLOGICAL ENVIRONMENT

4.2.1 Vegetation and Wildlife Habitat

Because of the lack of natural vegetation and wildlife habitat on the proposed plant site no effects to natural vegetation or wildlife habitat will occur from plant development.

4.2.2 Air Quality Impacts

4.2.2.1 Wildlife/Endangered Species

Sulfur dioxide impacts due to the existing and future [illegible] the Guddu Power Plant will occur only the burning of oil during [illegible] months (i.e., December and January). Natural gas is primarily [illegible] 'round and relatively high NO_x emissions occur producing NO_2 [illegible] Section 4.1.1.6 for more detail). For these conditions the [illegible] NO_2 concentrations for 1-hour, 3-hour, 8-hour, 24-hour [illegible] averaging times were developed and are shown in Table 4.2-1.

Air pollution effects from fossil fuel energy facilities [illegible] wildlife have included mortality and injury to animals exposed to [illegible] emissions to subacute physiological and behavioral changes from [illegible] exposures (Newman, 1979). Exposure can be from the inhalation, [illegible] or adsorption of pollutants.

Secondary EPA standards have been set to protect public [illegible] but physiological and behavioral effects have been observed at [illegible] below these standards. The primary effects at subacute levels include:

1. Respiratory stress involving alterations [illegible] physiology,
2. Reduction in the immune response of animals, and
3. Decreased abundance of vertebrate and invertebrate [illegible].

BEST AVAILABLE DOCUMENT

Table 4.2-1. Predicted Maximum Probable [illegible] SO_2 and NO_2 for the Gudda Combined [illegible]

Averaging Period	Concentration [illegible]	
	SO_2	[illegible]
1-hour	1353	[illegible]
3-hour	766	[illegible]
8-hour	461	[illegible]
24-hour	229	[illegible]
Annual*	Not applicable	[illegible]

* Same as NO_x. Oil is burned only during periods when natural gas is in short supply due to residential heating in [illegible] January. Oil combustion modeling was only done for [illegible] concentrations calculated by the model reflect only [illegible] average concentrations.

BEST AVAILABLE DOCUMENT

151

Considering these factors, however, the highest predicted concentrations are at or below the threshold for detectable effects [illegible] animals (Newman and Schreiber, 1988). No direct effects to [illegible] endangered species from the projected air emissions are [illegible].

4.2.2.2 Natural Vegetation

Native vegetation is subject to two kinds of effects [illegible] emissions. Acute injury may result from one or a few short exposures to very high concentrations. These exposures can affect growth and health of the plants and are often accompanied by foliar injury. In addition, [illegible] effects such as reduced growth and resistance to disease can [illegible] from higher frequency of exposure to moderately high concentrations which occur episodically. Visible foliar injury does not necessarily [illegible] any chronic effects. The predicted maximum SO_2 and NO_2 ambient [illegible] levels in the vicinity of the plant are shown in Table [illegible]. [illegible] is no information available on the sensitivity of native [illegible] and at Guddu, potential impacts to vegetation can be inferred [illegible] experimental fumigations on test species reported in the literature. [illegible] predicted SO_2 levels are at least two times lower than the reported [illegible] levels (Table 4.2-2). Results of SO_2 fumigation tests on species from the arid regions of the United States show that arid climate [illegible] to be more tolerant to SO_2 than species grown in more humid regions. [illegible] result, no impacts to natural vegetation from SO_2 is expected. Similar information on NO_2 sensitivity is not available. However, crop effect threshold values for NO_2 are several times higher than predicted values. No effects to natural vegetation are predicted.

4.2.2.3 Agriculture

The type of air emissions varies seasonally because of seasonal fuel use. During the winter (December and January) with the use of fuel oil, SO_2 and NO_x emissions predominate. During the rest of the year natural gas is burned and NO_x predominates effects. Agriculture in [illegible] is also seasonal with two seasonal crop groups: rabi or winter [illegible], wheat, barley, grain oil seeds, etc., and kharif or summer [illegible] rice, maize, millet, cotton, sorghum, etc. (Kurasky, [illegible]). [illegible] of the seasonal fuel use and crop rotation the rabi crops are [illegible] both SO_2

BEST AVAILABLE DOCUMENT

161

Table 4.2-2. Lowest SO_2 Doses Reported to Affect Natural [illegible]

Number of Species	Concentration (ug/m^3)	Time Period	[illegible]	Reference
87 species in southwest U.S. desert	From 1300 to 26,000	2 hrs	None showed no foliar injury below [illegible] however, [illegible] not [illegible]	Hill et al. 1974.
C_3 Atriplex sp and C_4 Atriplex sp from arid habitat, California	260, 520, 1300, 2340 and 3900	8 hrs	1300 and higher reduced [illegible] synthesis in both species, but affected [illegible] species more than C_4 species.	Winner and Mooney, 1980
5 annuals in Mojave Desert, USA	5200, 1742, and 572	8 to 17 weeks	Mortality and growth reduction at 5200 and 1742. Two species died of mortality and growth reduction at 572, and three species did not.	Thompson, Kats, and Lennos, 1980.

BEST AVAILABLE DOCUMENT

152

and NO_x emissions while the kharif crops are exposed [illegible] SO_x emissions. Most of the agricultural activity occurs [illegible] southwest of the plant and to the south of the Gohtki Feeder Canal.

The potential impacts to agricultural crops are similar [illegible] of native vegetation and can also be inferred from experimental [illegible] on test species. Tables 4.2-3 and 4.2-4 list the effects [illegible] exposures, respectively, on crop species similar to the ones [illegible] cultivated around Guddu. As noted from these data, wheat and [illegible] are the most resistant crops to SO_2. A comparison of the predicted [illegible] of SO_2 and NO_x and averaging (exposure) times presented in [illegible] show the reported threshold and other effect levels to be higher than the predicted concentrations. The agricultural areas are not exposed [illegible] concentrations of SO_2 and NO_x. As a result, no impact to agriculture from the predicted emissions is expected.

4.2.3 Aquatic Impacts

4.2.3.1 Fisheries

Several species of commercially important fish occur in the Indus River. Since cooling water is taken from the feeder canal [illegible] or impingement impacts to the fisheries of the Indus will occur. Because of thermal discharge occurs only during high flows at which [illegible] volume of water and river width is the greatest no thermal effects will occur to the fisheries of the Indus. Modeling analysis (see Section [illegible]) has shown the rise in temperature is very low; 1.6°C at 1000 [illegible] 0.5°C at 5000 meters. The temperature increases are not considered [illegible] to the fisheries of the river. In addition, these thermal effects will only occur along the western bank of the river and effect less than [illegible] of the width of the river. No thermal blockage, therefore, will occur. During low flow, no significant thermal discharge occurs.

Plant wastewater can contain salts, oils and grease, and [illegible] trace metals. Analysis of the potential for low volume (plant) wastewater discharges (see Section 4.1.3.3) indicated that likelihood of direct discharge in the Indus River is remote. If such an event [illegible], however, there is sufficient dilution ranging from [illegible] point of

BEST AVAILABLE DOCUMENT

Table 4.2-3. Lowest SO_2 Doses Reported to Affect Crops

Number	Species	Concentration (ug/m^3)	Time Period	Effect	Reference
1	Rice (*Oryza sativa*)	1,300	1.5 hrs/day for 30 days	Leaf injury and reduction in chlorophyll	Agrawal, [illegible] and Rao, [illegible]
2	Rice (*Oryza sativa*)	650	1.5 hrs/day for 40 days	Foliar protein and ascorbic acid reduced	Mandl, et al., 1974
3	Sorghum (*Sorghum bicolor*)	117	3 weeks	Reduced dry weight	Purdy, 1[illegible]
4	Corn (*Zea mays*)	262	17 days	No yield effect	Klein et al., 1978
5	Corn (*Zea mays*)	812	7 days	No yield effect	Mandl et al., 1975
6	Spring wheat (*Triticum aestivum*)	2,600	2 hrs/day for 60 days	Biomass reduced	Prasad and Rao, 1982
7	Wheat cv. Yamhill (*Triticum* sp.)	260	24 hrs/day for 30 days	Yield reduced	Neely and Wilhoit, 1981
8	Wheat (7 cultivars) (*Triticum* sp.)	1,300	100 hrs	No yield effect	Laurence, 1[illegible]
9	Red Bean (*Phaseolus vulgaris*)	5,420	1-hr peak 3 hrs	Shoot mass reduced 22 percent	[illegible] et al., [illegible]
10	White Bean (*Phaseolus vulgaris*)	393	10 days	No yeild effect	Hofstra and Ormrod, 1977
11	Soybean (*Glycine max*)	630	3 hrs	19 exposures reduced yield in 2 cultivars	Kohut et al., 1982
12	Pinto Bean (*Phaseolus vulgaris*)	806 208	7 days 27 days	No effect on height or weight	Mandl et al., 1975
13	Soybean (*Glycine max*)	367	191 hrs over 68-day period	Stem but not pod biomass reduced. Mexican bean beetle reproduction increased	Hughes, et al., 1983

BEST AVAILABLE DOCUMENT

154

Table 4.2-3. Lowest SO_2 Doses Reported to Affect Crops (Page 2 of 2)

Number	Species	Concentration (ug/m^3)	Period	Time Effect	Reference
14	Bean (Phaseolus vulgaris)	540	7 hrs for 4 times during growth	No effect	Bytheway [illegible] Taylor, [illegible]
15	Grams Grass (Bouteloua gracilis)	114	31 days	No effect on shoot, [illegible] root biomass. Crown biomass reduced at 114	
16	Cotton			Cotton grown near TVA power plants produced more biomass than plant grown in remote locations, but no concentrations of SO_2 provided	[illegible] 1977

BEST AVAILABLE DOCUMENT

155

Table 4.2-4. Nitrogen Dioxide Doses Reported to Affect Crops

Number	Species	Concentration (ug/m^3)	Time Period	Effect	Reference
	Oats and Alfalfa	744 NO and 1000 NO_2	1.5 hrs	Temporary [illegible] photosynthesis	Hill and Bennett 1970
	Tomato	310 NO and 470 NO_2	20 hrs	Reduction [illegible] synthesis [illegible]	Lapren and Mansfield, 1976
	Pinto Bean	620	10-19 days	Reduced [illegible] weights	Taylor and Eaton 1966
	Oranges	120 to 470	290 days	Reduced [illegible] weight of fruit	Thompson, et al. 1970

BEST AVAILABLE DOCUMENT

156

discharge to 59 to 1, 5000 meters downstream for [illegible] condition, i.e., 1 day - 10 year low flow.

No discharges from accidental spill on the plant site [illegible] anticipated since there is sufficient containment systems and the porosity of the soil makes migration of a spill the river unlikely (see Section [illegible]).

4.2.3.2 Endangered Species

The endangered species that occur or could occur in the vicinity of the plant are Indus dolphin (common at the barrages, [illegible] expurgated from the marshes), various ducks and [illegible] which utilize the marshes, ponds and temporary lakes in the [illegible] of water quality conditions from operational activities [illegible] significant toxic discharges reaching the Indus River. Analysis [illegible] potential for accidental spills such as oil indicate that such [illegible] unlikely. If an oil spill occurs, it will either be contained [illegible] be contained within the bunds and not migrate to the river. [illegible] thermal impacts does not exist since during the high [illegible] the discharge will result in no observable changes [illegible] regime of the river. During low flow period cooling towers will [illegible] thermal discharge will occur.

4.3 SOCIAL AND CULTURAL ENVIRONMENT/DEMANDS ON PRIMARY [illegible] SECONDARY INFRASTRUCTURE

4.3.1 Land Use Impacts

The proposed location of the Guddu expansion project [illegible] with the existing land uses at the site and will be contiguous [illegible] Thermal Station compound. However, the relocation of a [illegible] structures will be required.

Fill from the Indus River is presently being stockpiled [illegible] new backup cooling tower. The siting plan requires grading [illegible] proposed site to an equivalent height of the existing [illegible], 80 m above M.S.L.). The estimated amount of fill [illegible] site area is 225,000 cubic meters. Dumptrucks are being [illegible] fill up from the river; it is uncertain if draft animal [illegible] the

BEST AVAILABLE DOCUMENT

157

fill over the short distance from the cooling tower [illegible] 300 MW site (about .6 km). No impacts to the existing [illegible] and filling are expected.

4.3.2 Demographic Impact

The average construction work force for the 300 MW [illegible] project 1989-1991 is estimated to be 1200. In addition, there [illegible] people working on other contracts directly administered by [illegible] projected operational worker population is estimated to [illegible] personnel.

4.3.2.1 Population Patterns

The construction workers for the expansion project [illegible] come from the existing combined cycle project while both [illegible] people will fill operational positions. As a result, population [illegible] exist at the Guddu site are not likely to change with the [illegible]

4.3.2.2 Employment and Economic patterns

During construction about 1200 workers will be [illegible] construction, the work force will stabilize to [illegible] operational workers. The total number of additional people [illegible] live in the area is expected to vary during the life of the [illegible] about 3,600 during the construction phase to about 600 during [illegible] This variation will be due principally to the growth in the [illegible] and the arrival and departure of construction workers. [illegible] construction workers will likely be those already working on the [illegible] MW project and no significant changes is expected.

Several types of taxes and duties will be collected [illegible] project by the Government of Pakistan, the Government of Sind, [illegible] District Government. During the project start-up phase, [illegible] tax collections have been estimated to about Rs 11,[illegible] from the projected work force and an average tax rate of [illegible] 1986). During the operation phase, annual income tax [illegible] estimated to about Rs 650,000 based on an average [illegible] 7,233/yr (ESE, 1986). Overall annual average income tax [illegible] estimated to be about Rs 52,000,000 for a 30-year life of the [illegible] In addition to

BEST AVAILABLE DOCUMENT

158

income taxes, duties and sales taxes would depend [illegible] amount, usually as a percentage, that would apply to th[illegible]

The local economy will not substantially change du[illegible] construction period. After that period, the economy may d[illegible] off at a point significantly lower than currently exist[illegible] are considered on overall positive economic benefit [illegible] and local area but will cause short-term economic disrup[illegible] construction period ends. If the project ceases to exist after [illegible] 30 year life, economic disruption would also occur.

With the additional development of Guddu power plant, [illegible] opportunities should be available to the local popu[illegible] assumed the basic employment patterns that exist [illegible] The availability of the local people may be limit[illegible] extensive agricultural activity, their lack of experien[illegible] of their continued employment in secondary infrastructur[illegible] the worker colony areas. As the construction phase [illegible] ends, local unemployment could increase and may present pr[illegible] Similarly, at the end of the project, unemployme[illegible] of the loss of jobs.

4.3.2 Primary Infrastructure

Sufficient housing will be available in the WAPDA [illegible] workers that are going to be employed specifically for the [illegible] Table 4.3-1 presents housing construction by WAPDA employee [illegible] 450 MW phase of the Combined Cycle plant and both phase[illegible] housing construction by WAPDA employee category for th[illegible]

Some of the construction workers' housing curren[illegible] the strip of the Sukkur-Guddu Road near the proposed [illegible] to be relocated. Another cooling intake will be const[illegible] residences now exist. There are currently Sindhi [illegible] dwellings and Pathan tents with about 35 draft animals in this [illegible] sufficient area for housing is available adjacent to the site to [illegible] construction workers.

BEST AVAILABLE DOCUMENT

Table 4.3-1. Residential Colony Housing Construction (1986-1991)

Category	450 MW CCP WAPDA Salary Grade (Gr)	Constructed Houses	Houses Under Construction	[illegible]	[illegible]-300 MW CCP [illegible] II(1990-91) (Steam Turbines)
I (A-Type)	20	0	0	[illegible]	0
II (B-Type)	19,18	6	9	[illegible]	0
III (C-Type)	17,16	10	17	[illegible]	7
IV (D-Type)	15-11	59	43	[illegible]	29
V (E-Type)	10-3	73	49	[illegible]	37
VI (F-Type)	2,1	73	153	[illegible]	2
	TOTALS	221	271	[illegible]	75

Source: WAPDA Administration Files-Guddu, 1988.

BEST AVAILABLE DOCUMENT

4.3.4 Secondary Infrastructure

As discussed previously in Section 3.3.1, in addition [illegible] workers and their dependents, other people have been attracted [illegible] power complex area. The expansion will likely contribute [illegible] location of this secondary development will occur in the [illegible] identified. The current community contains various business [illegible] of the colony residents, including various retail shops [illegible] repair shops, small hotels, and firewood yards. [illegible] with the shops in the same building or in the same area.

Based upon previous experience at the Guddu site, it [illegible] that 200 to 300 additional people may live in the secondary [illegible]. This secondary population growth (200-300) when added [illegible] population, i.e., workers and their dependents, is not considered [illegible]. Although the infrastructure requirements of the power plant [illegible] their dependents will be provided, the infrastructure [illegible] the secondary development will not be provided. The additional facilities and services will likely include housing, health care [illegible] police protection (WAPDA, 1988).

HOUSING

Housing will not be provided for construction workers [illegible] secondary population growth resulting from the congregation of [illegible] in the area. This secondary growth is not expected to [illegible] ability to provide such housing. Based upon the existing [illegible] operation activities at Guddu, it is anticipated that new housing to accommodate this secondary growth could easily be generated by new [illegible] or local builders.

HEALTH CARE

The WAPDA medical facility will continue to provide [illegible] services to persons who are not WAPDA employees or their dependents if a service fee is paid. Medical care is also available in Guddu from [illegible] physicians.

BEST AVAILABLE DOCUMENT

EDUCATION

Educational needs will be slightly increased due to [illegible] anticipated secondary development. These needs will be partially [illegible] the project. Schooling for children of parents who are not [illegible] their dependents will be made available upon payment of [illegible] A fee for each child of non-employee parents attending [illegible] currently Rs 45 per month at the Guddu colony. The monthly [illegible] at Guddu after recurrent discipline problems were encountered [illegible] children who were not residents of the WAPDA colony. The fee, which [illegible] higher for non-resident children and which is expensive by local economic standards, will have the effect of reducing non-resident children from WAPDA schools.

POLICE PROTECTION

The increase in population will not have a significant impact on present security (police) for the area. Providing police protection and maintenance of law and order for secondary community development will be the responsibility of the Sind government.

4.3.5 Cultural Resources

4.3.5.1 Cultural Patterns and Values

The labor pool at Guddu is comprised of Sindhis, Punjabis, Baluchis, and some Pathans. The hiring practices of construction [illegible] are not expected to dramatically change in light of the [illegible] composition. Likewise, domicile arrangements for non-[illegible] workers are not foreseen to pose any major problem. Separatism and hierarchy are traditionally embedded norms of these Pakistani social groups. A premium is emphatically placed on being with one's own kind.

4.3.5.2 Historical and Archaeological Resources

Because of the disturbed nature of the site, any hist[illegible] and archaeological resources will not be affected by the expansion project that are not already impacted. A chance find provision has been added to the mitigation plan to provide protection for unexpected hist[illegible] archaeological resources. It should be noted, however, [illegible] archaeological importance of the site is overshadowed [illegible] already

BEST AVAILABLE DOCUMENT

existing historical and archaeological sites of [illegible] (refer to Section 3.3.3.2).

4.3.6 Transportation System

Construction of the expansion project will [illegible] availability of transportation facilities to provide for the [illegible] materials and workers to and from the project site. Examination [illegible] and harbor facilities in Sind Province and discussions with [illegible] Department of Highways, and a special carrier contractor [illegible] for the project will be moved primarily by road, with [illegible] arriving via the Port of Karachi. Worker movement will [illegible] road transport.

Shipment of construction materials, operation [illegible] transport of workers will originate primarily in the Guddu [illegible] will be over the Indus Highway and/or the National Highway. [illegible] Highway is a 5.4-m (18-ft) wide, asphalt-paved road running [illegible] west side of the Indus River valley. The National Highway [illegible] the Indus River at Kotri on the Kotri Barrage, runs north [illegible] the east side of the Indus River valley. The latter highway [illegible] carries more traffic than the Indus Highway. However, a 6-year [illegible] program is underway which includes both the Kotri Barrage [illegible] Super Highway north of Kotri and Hyderabad. Until the [illegible] completed, heavy loads may have to be diverted to the Indus Highway.

Improvements to the Indus Highway are also planned. [illegible] Highways Department has developed plans, specifications, [illegible] estimates to expand the Indus Highway to a full 7.3-meter [illegible] and upgrade the load-carrying capacity to 22,000-lb axle loading. [illegible] has been made to the Government of Pakistan for funding [illegible]. As a first step, the Indus Highway was recently proclaimed [illegible] National Super Highway System. Improvement of the road will [illegible] expansion project for the movement of materials.

Given the present situations and governmental plans, [illegible] exist that will require project funding for the transportation [illegible] structure.

BEST AVAILABLE DOCUMENT

The existing road and port facilities have handled [illegible] loads in the past and are considered to be adequate to [illegible] movement of materials and workers between the Karachi and the [illegible] will increase slightly; heavy loads and traffic have [illegible] on this road. Improvements to bring the Indus Highway [illegible] Super Highway standards would greatly benefit transportation [illegible] the area. Access to the Guddu site, however, is not contingent [illegible] improvements.

4.3.7 Occupational Health and Safety

4.3.7.1 Occupational and Safety Hazards and Potentials

At a gas or oil-fired power plant, both health hazards and safety hazards exist. The interaction of a worker with the environment, through the normal course of his job, brings about occupational and [illegible]. Exposure to these hazards can result in short-term and long-[illegible], disability, and premature death.

Occupational Hazards

"Occupational" health hazards are those resulting in a slow impairment of health. They can be classified into four major categories:

Biological -	due to bacteria, fungus or [illegible]
Chemical -	due to dermal or respiratory exposure of toxic chemicals in the form of [illegible] gases
Physical -	due to heat, noise, vibration or radiation
Stress -	due to chemical, physical, [illegible] or ergonomic factors

The effects of two or more health hazards is often additive, i.e., there is a cumulative effect. However, the effects of any [illegible] hazard are difficult to quantify, as the magnitude depends [illegible] factors, including health of the individual, age, climate, diet, etc.

At oil and gas fired power plants, such as the [illegible] development, the main health hazards include exposure to toxic dusts [illegible] and excessive heat or noise.

BEST AVAILABLE DOCUMENT

The existing 600 MW GTCC power plant at Guddu was surveyed for potential health hazards. Based upon this survey, and documented [illegible] hazards identified with oil and gas fired power plants, the following health hazards were identified as primary concerns:

Noise- The World Bank occupational guideline for noise levels is 90 dBA. Noise levels higher than this can cause permanent hearing loss and increase stress. It also dulls human senses, which can in turn increase accident rates. Noise levels higher than [illegible] dBA were detected at several locations within the existing 600 MW GTCC power plant. This included locations near the gas turbine exhaust [illegible], the gas mixing plant, and at the gas reducing stations. Noise levels in excess of 100 dBA were measured at the gas mixing plant and gas reducing station.

Heat--The Guddu site experiences very hot and dry climatic conditions. Workers in the construction and operating force may be required to spend many hours in these conditions as a normal [illegible] of their work. In addition, high temperature are experienced near certain operating equipment, such as the gas turbines, heat recovery steam generators and other outdoor equipment. In certain instances, [illegible] equipment may be a potential problem due to heat generated by the equipment or poor ventilation.

Dust--The Guddu site is located in an extremely arid climate, where rainfall seldom occurs, and as a result the ground areas lack vegetative covering. Dust is generated primarily by construction activities (i.e., earthmoving, bulldozing, grading and vehicle traffic over unpaved roads). The major dust sources during operation is vehicular traffic over unpaved roads. Wind blown dust can be significant during both construction and operation. Excessive dust can lead to many problems, including worker's health, [illegible] upon operating equipment, and increased maintenance of equipment, vehicles and buildings.

BEST AVAILABLE DOCUMENT

Safety Hazards

"Safety" hazards are hazards which can result in immediate and/or violent harm to an individual. They are associated with industrial equipment and processes, and often involve jobs or tasks for which training was required. Most safety hazards fall into one of the following categories:

- Stationary machines (with moving parts)
- Moving equipment and machines
- Electricity
- Flying objects resulting in loss of eyesight
- Falls
- Fires and Explosions
- Heat Stress
- Noise
- Vibrations

They result in burns, electric shocks, cuts, bruises, sprains, broken bones, loss of limbs, eyesight or hearing, and sometimes in death. As in the case of occupational health hazards, two or more safety hazards can also have a synergistic affect.

In a power plant, the primary safety hazards involve burns, falls, fires and explosions, electricity, heat and noise.

Based upon survey of the existing operations at Guddu, as well as documented experience at other operating oil and gas fired power plants, the following safety hazards were identified as of primary concern at Guddu:

Electricity--Electrocution from contact with live generators, transmission lines, other electrical equipment can result in severe injury or death. There is one documented case of an electrocution of a worker at Guddu. This occurred when a worker was [illegible] in a truck which was under a major transmission line at the [illegible]. The ground was wet at the time, and the worker placed his hand on the truck, at the same time that high voltage from the overhead transmission line discharged to the truck, thereby electrocuting the worker. There are several overhead transmission lines at the Guddu power development. Some of these lines are low by international standards [illegible] pass over

BEST AVAILABLE DOCUMENT

other structures such as buildings and tanks, which increases their potential as hazards.

4.3.8 Industrial Hazard Assessment

As part of the ESSA, the potential for a major accident associated with the Guddu power development, which may affect the environment outside the plant boundary, must be addressed. This requires that a hazard analysis of the proposed facility be conducted to determine the potential damage from the accidental release of toxic, flammable or explosive materials. The analysis provides an identification of the major hazards associated with the industrial facility. Based upon the potential for harm in each hazard, the hazard can be reduced or eliminated through process changes, reduction of hazardous chemicals on-site, use of containment structures, modification of site layout, and implementation of emergency planning measures.

The Guddu power development and proposed 300 MW GTCC expansion uses oil and natural gas as fuels. Because of the large quantities of these fuels that must be handled and stored, a potential hazard exists from rupture, fire and explosion. Large quantities of other chemicals are not routinely processed, used or stored at the site. However, small quantities of toxic chemicals may be used for water treatment and maintenance of plant equipment. Based upon review the proposed facilities associated with the 300 MW GTCC expansion, the following potential catastrophic hazards were identified:

* Rupture of natural gas pipeline
* Fire associated with rupture of natural gas pipeline
* Rupture of oil storage tank
* Fire associated with oil storage tanks
* Tanker truck fire and explosion
* Spill of toxic chemical into wastewater treatment system

Each of these potential hazards is evaluated in the following sections, by methods recommended by the World Bank (World Bank, 19[illegible]). The methods are simplified and conservative, and offer an initial evaluation of hazardous potential. If more precise estimates of harm are desired, more detailed analysis using more refined techniques should be employed.

BEST AVAILABLE DOCUMENT

No attempt has been made to estimate the probability of a major industrial accident occurring at the site. Such accidents by their very nature are extremely rare. The probability of an accident occurring can be reduced through proper training, maintenance and prevention measures.

4.3.8.1 Rupture of Natural Gas Pipeline

A potential catastrophic accident associated with a natural gas pipeline is the rupture of the pipeline and release of natural gas into the atmosphere. The rupture would produce a continuous release of natural gas at the point of rupture, and the resultant plume would move downwind and disperse according to meteorological conditions.

The primary constituent of the natural gas used as fuel is methane, with minor amounts of ethane, propane and butane, and other inert gases. Methane is not considered as a toxic air pollutant. However, natural gas is considered an asphyxiant, i.e., if present in sufficient concentrations can result in oxygen concentrations of less than 18% by volume, thereby posing a hazard to people.

The hazard analysis evaluated the potential for a natural gas pipeline rupture to produce a plume containing an oxygen concentration of less than 18% by volume (180,000 ppm). Considering the normal oxygen content of the atmosphere to be 20% by volume, the natural gas concentration in the plume would need to be 138,000 ppm or greater in order to reduce the overall oxygen level to 18% or less. Based on a pipeline rupture releasing 3,055,400 scfh of natural gas (equivalent to the maximum gas consumption of the proposed 300 MW GTCC expansion) the hazard analysis indicates that such a level of natural gas concentration would not exist downwind of the rupture, due to normal atmospheric dilution and dispersion. At a distance of 25 m from the rupture, the predicted maximum gas concentration is only 8,000 ppm, and this is under the most adverse meteorological conditions. As a result, there appears to be low potential for a natural gas rupture to cause a hazard downwind of the rupture, due to the concentrated plume of gas.

BEST AVAILABLE DOCUMENT

168

4.3.8.2 Fire Associated With Rupture of Natural Gas Pipeline

A second hazard associated with a natural gas pipeline rupture is that of fire. Such a rupture, if ignited, would produce a jet fire. The resulting radiation from the fire would have the potential to cause damage or casualties. The hazard analysis focused on estimating the heat intensity of the fire and the resulting damage area. The methodology used was that prescribed in the World Bank's Manual of Industrial Hazard Assessment Techniques.

As in the case of the gas pipeline rupture, the gas flow from the rupture was assumed to equal the maximum gas consumption of the proposed 300 MW GTCC expansion (3,055,400 scfh). The predicted area of lethality (i.e., potential casualties) is a 50 m radius surrounding the rupture point. Beyond 50 m and out to 100 m radius, no casualties are expected, but other injuries such as burns are likely. Within a 50 m radius from the fire, 100% lethality is predicted. Damage to process equipment may occur within 17 m from the fire, and melting of plastic tubing may occur within a 30 m radius.

Aboveground gas pipelines associated with the expansion should be located considering these potential hazards. Of major concern would be any residences which fall within the hazard radius. Adequate fire protection and firefighting equipment should be maintained at the facility to respond quickly and effectively in case of a fire.

4.3.8.3 Rupture of Oil Storage Tank

The existing GTCC units have a four tank farm for oil storage; each tank is located within a containment cell consisting of a combination of concrete wall and earthen berm. Each containment cell has concrete floor, ditch and recovery pump for containment of spills or small leaks. For small leaks or spills, the recovery ditch and pump system will be adequate to control any materials. Whereas each containment cell has been designed to provide sufficient volume to retain the entire volume of the tank, the structural stability of the earthen berm creating the perimeter of the cell is questionable. In the unlikely event of tank rupture or such a catastrophic

BEST AVAILABLE DOCUMENT

tank failure, such a large spill would likely cause the earthen cell berm to fail.

Due to the pervious nature of the site fill material and the presence of the 80 meter MSL flood protection bund, there is little potential for the direct release of oil to the Indus River. However, in the event of catastrophic tank failure and large volume spillage, oil could be discharged indirectly by seepage from groundwater or through pumping of contaminated groundwater for cooling tower makeup. In the event of such a catastrophic tank failure, the potential for contamination should be assessed.

Given these various circumstances, there is very little probability of oil directly or indirectly entering the Indus River due to a catastrophic tank failure at the existing GTCC tank farm. However, this probability could be reduced to virtually zero by the construction of a structurally adequate berm or wall around the entire perimeter of the containment cells. Such a structurally adequate berm or wall would allow the retention of the entire tank volume in the event of catastrophic failure and virtually eliminate all potential for discharge.

4.3.8.4 Fire Associated With Oil Storage Tanks

A potential hazard similar to the natural gas pipeline rupture and fire is the rupture and ignition of an oil storage tank at the site. The proposed expansion will have two fuel oil storage tanks located on-site. The hazard analysis evaluates the rupture and spill of both storage tanks, formation of an oil "pool" within the diked containment area surrounding the oil tanks, and subsequent ignition and fire. The analysis utilized the World Bank manual for estimating the damage zone due to such an event.

The predicted radius from the fire beyond which no effects are predicted is 25 m. Within 1.6 m, damage to process equipment would occur, and within 8 m, 100% lethality is predicted. Some casualties would occur within a 15 m radius of the fire.

Compared to the gas pipeline fire, this type of "pool" fire does not appear to be as serious in magnitude. The planned placement of the oil storage

BEST AVAILABLE DOCUMENT

tanks at the 300 MW expansion site seems to be adequate based upon this analysis. However, the oil tanks are situated within [illegible] of one of the gas turbine generating units. There is also an [illegible] building which will be retained located about 15 m from the tanks. Due to the uncertainties in estimating potential hazards, as well as the added potential of explosion, it may be appropriate to relocate these tanks to a more remote, safer location.

4.3.8.5 Tanker Truck Fire and Explosion

Another potential hazard which exists at Guddu and may increase due to the proposed 300 MW GTCC expansion is a tanker truck fire and explosion. Tanker trucks delivering fuel oil to Guddu form a line when waiting to unload, sometimes stretching for a mile or more. The trucks are normally parked very close to each other. If one of these trucks caught fire and exploded, a chain reaction might be set off affecting many more trucks. This represents a hazard to property and people. The hazard analysis assesses the damage potential from such an accident.

Using the recommended World Bank hazard assessment techniques, the damage area due to thermal radiation from a tanker truck fire is relatively small. Beyond about 10 m from the fire, no adverse affects would be apparent. Beyond about 2 m, process equipment would not be affected. However, the most severe damage would be caused by an exploding tanker truck. The analysis indicates that within 120 m of such a blast, heavy damage to process equipment and buildings would occur. Minor damage would occur out to 240 m from the blast.

This analysis indicates that a minimum distance between individual or groups of tank trucks should be set to protect both equipment and people in the area in the event of an explosion. At least 20 meters between groups of 3 trucks should be established as minimum criteria.

4.3.8.6 Spill of Toxic Chemical Into Wastewater Treatment System

The greatest potential for the release of toxic material in wastewaters comes from any potential for spillage of toxic materials into the low volume wastewater collection and treatment system. Such material potentially

BEST AVAILABLE DOCUMENT /71/

include oils and cleaning material associated with [illegible] operation and maintenance.

Inclusion of a control valve at the outlet from the [illegible] wastewater treatment basin would allow the cessation of discha[illegible] in the event that any toxic material were spilt and entered the low [illegible] treatment system. The treatment basin could then be cleaned [illegible] the pollutant removed prior to further discharge. Such a control valve would [illegible] the greatest opportunity to control any potential spills and related discharges.

BEST AVAILABLE DOCUMENT

172

5.0 ENVIRONMENTAL MITIGATION PLAN AND MONITORING PROGRAM

5.1 SECONDARY INFRASTRUCTURE DEVELOPMENT

5.1.1 Health Care

With the third and final construction phase of the [illegible] 50-bed hospital nearing completion, there appears to be [illegible] capability to handle seriously ill people living near the WAPDA [illegible]. One major problem which must be overcome is the shortage [illegible] the hospital (WAPDA, 1988). The hospital is equipped to handle [illegible] cases but it cannot treat all the palliatively serious infectious [illegible] diseases that occur. Many of these conditions result from the lack of health education and reluctance towards Western medicine [illegible]. The lack of adequate refrigeration and potable and/or treated [illegible] have serious public health implications, principally gastrointestinal infections which are widespread. The hospital is not capable of [illegible] the majority of such ill persons in the area, but with health education a great number of these cases could be eliminated. As a result, WAPDA hospital staff should be provided a budget to establish a health education program for the Guddu area. Such a program can be coordinated with the United Nations' agencies, such as UNICEF, to better educate the populace. At least one full-time health care professional should be dedicated toward this program. The cost of this program, including literature, is Rs 420,000/year.

Because there are at least two cases of rabies seen at the hospital each year, there is a growing concern among hospital staff over the number of unleashed dogs that are potentially rabid within and near the compound (WAPDA, 1988). There were 84 unleashed dogs counted within various sectors of the compound and within a two-kilometer radius of the power plant. WAPDA should investigate the need to develop an animal control program for the compound and nearby area. The WAPDA security police and Sind police would be the appropriate organization for implementing such a program.

5.1.2 Education

The increase in primary, secondary and college level students associated with the 300 MW expansion is expected to be small compared with the existing colony needs. Two primary schools are currently scheduled for construction

BEST AVAILABLE DOCUMENT

coincident with the construction phase of the 300 MW expansion project. Another high school may also be needed to accommodate the expected students during the 300 MW construction phase. Enrollment is not expected to markedly increase at the college level from the existing [illegible] to 270 students in 1989.

WAPDA's current program is considered sufficient to accommodate the needs of the secondary infrastructure.

5.1.3 Police

The local police service provided by the Sind provincial government is considered sufficient to accommodate the needs of [illegible] development.

5.1.4 Utilities

Electricity is provided free of charge to WAPDA employees.

5.1.5 Transportation

Transportation to and from the site is currently adequate. In addition, improvements are planned for several of the major highways, i.e., Indus Highway and National Highway.

5.2 LOCAL EMPLOYMENT

It is WAPDA's policy to hire local people for positions through Grade 16. Skilled and unskilled construction will likely be hired for these additional positions. WAPDA will provide job-specific training, as required, to assure employees are properly prepared.

5.3 NOISE

Due to the proximity of the proposed 300 MW GTCC expansion site to workers' villages (particularly in the northwest and southwest directions), a solid barrier (wall) located around the site boundaries may be desirable to mitigate noise impacts. In order to investigate the potential benefits of this mitigation, the noise impact analysis was repeated with a solid barrier placed at a distance of 100 m from noise sources at the 300 MW

BEST AVAILABLE DOCUMENT

/ 14

expansion site. The simulated barrier was 10 feet [illegible] plant grade elevation.

Presented in Figure 5.3-1 is the predicted noise impact [illegible] the 300 MW GTCC expansion only, with the barrier. Comparison of this figure with Figure 4.1-6 (300 MW expansion with no barrier) [illegible] that the barrier can reduce noise levels due to the proposed expansion only by up to 15 dBA near the site and by 10 dBA at further distances.

Presented in Figures 5.3-2 and 5.3-3 are predicted [illegible] noise levels in the Guddu area with the noise barrier in place. These [illegible] can be compared to the predicted future noise levels with [illegible] barrier (Figures 4.1-7 and 4.1-8) and the baseline noise levels (Figures [illegible] and 3.1-5). This comparison indicates that the noise barrier would reduce noise impacts from the proposed 300 MW expansion.

As discussed in Section 4.1.2, baseline noise levels exceeding 55 dBA would only slightly increase with the proposed expansion. Indeed, a majority of noise generated at the site is from existing sources. For a mitigation to be effective in reducing overall noise levels at the workers' colony, barriers must be placed around such sources as the gas mixing reducing areas and the existing GTCC units.

Vegetative barriers would also be effective in reducing overall noise levels. Such barriers are less costly than solid barriers and could be implemented by planting rows of rosewood and/or acacia trees.

It is noted that for any noise barrier to be effective, it must be located between the noise source and the receiver, i.e., block the path between the source and receiver. If the noise source is elevated, the barrier must be of sufficient height to block the source-receiver path.

WAPDA should implement a pilot program of planting native tree rows between the gas mixing and reducing areas and the existing GTCC units, and the workers' colony. This would require planting [illegible] meters apart

BEST AVAILABLE DOCUMENT

175

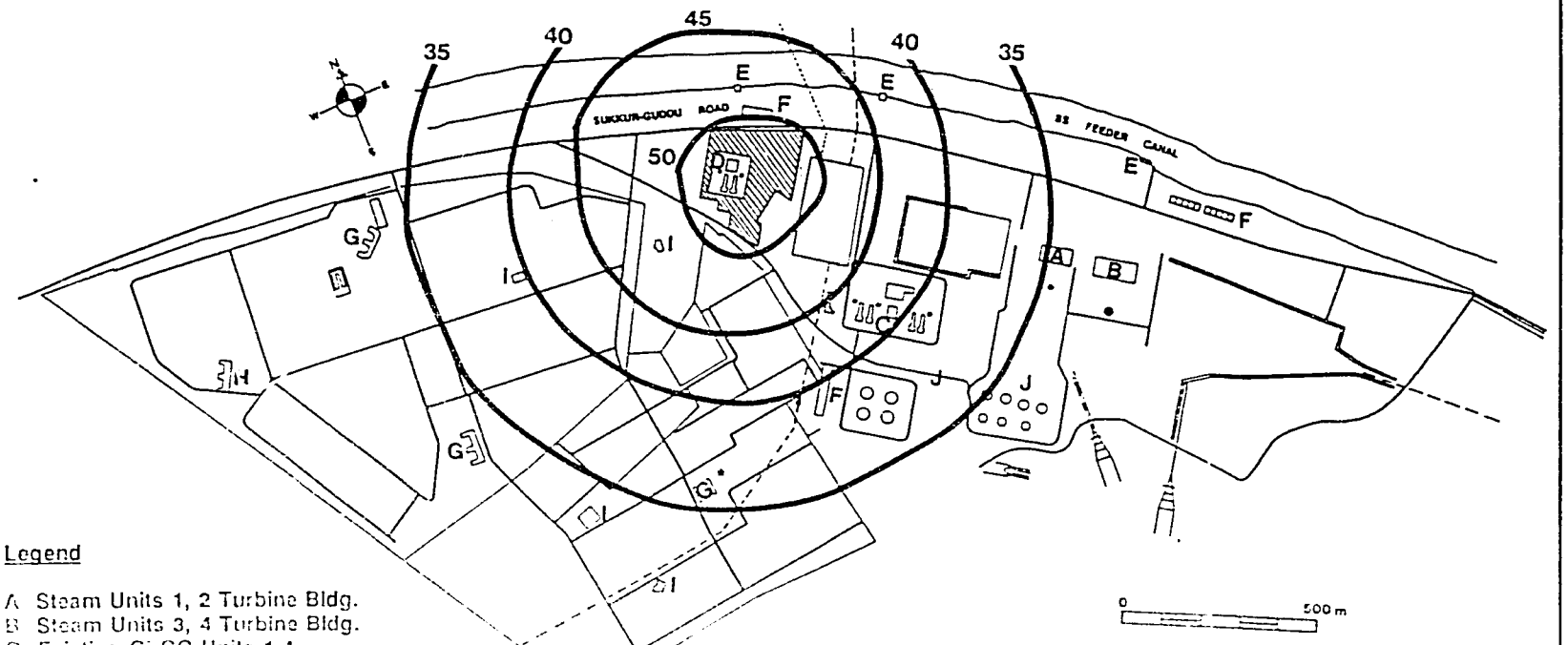

Legend

A Steam Units 1, 2 Turbine Bldg.
B Steam Units 3, 4 Turbine Bldg.
C Existing GTCC Units 1-4
D Proposed GTCC Units 5, 6

BEST AVAILABLE DOCUMENT

Figure 5.3-1. Predicted Noise Impact (dBA) of the Proposed 300 MW GTCC Expansion Only (with Barrier at 100m)

KBN

1/6

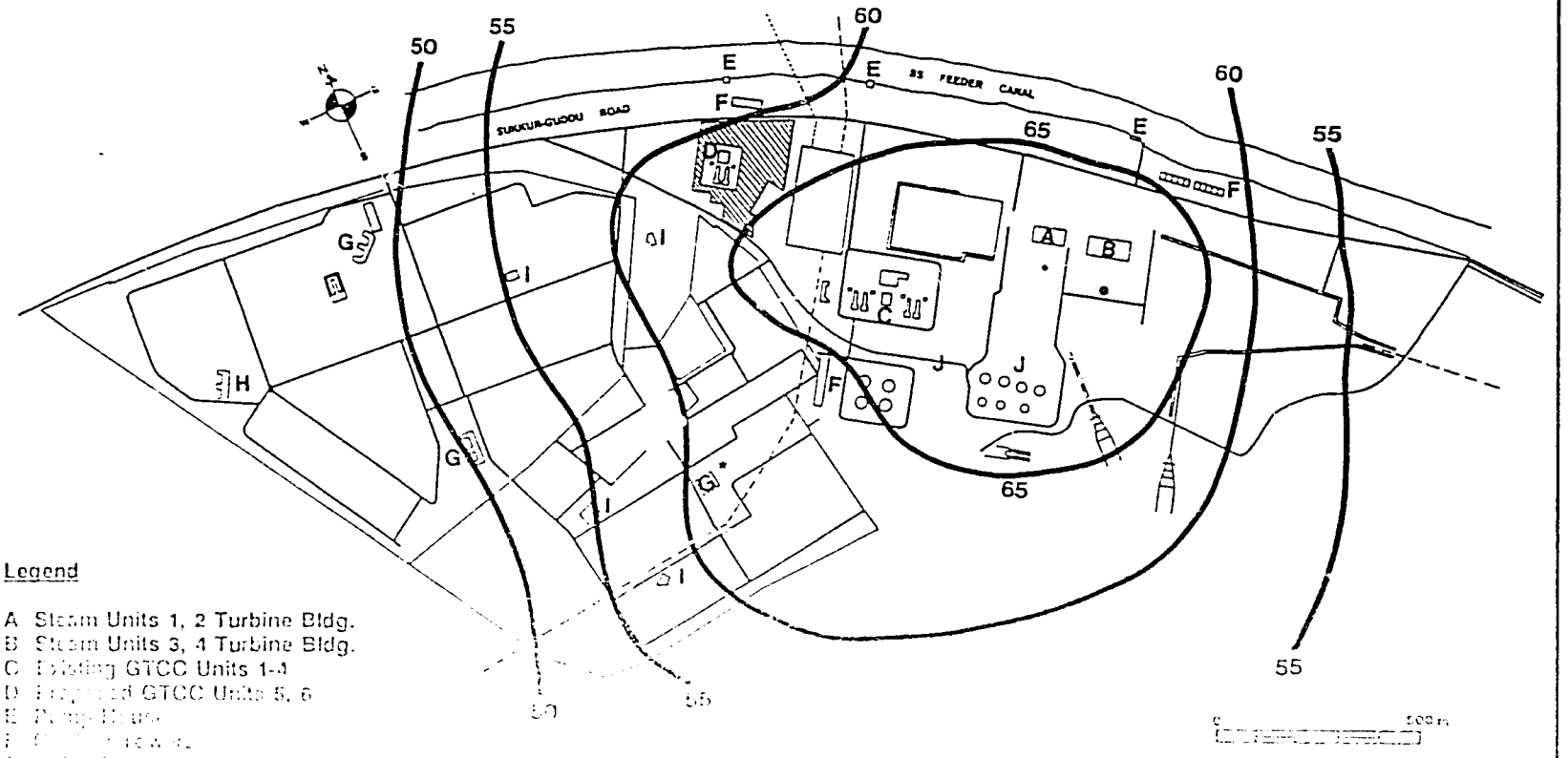

BEST AVAILABLE DOCUMENT

Figure 5.3-2. Predicted Future L_{eq} (24) Noise Levels (dBA) with Proposed 300 GTCC Expansion, with Noise Barrier

KBN

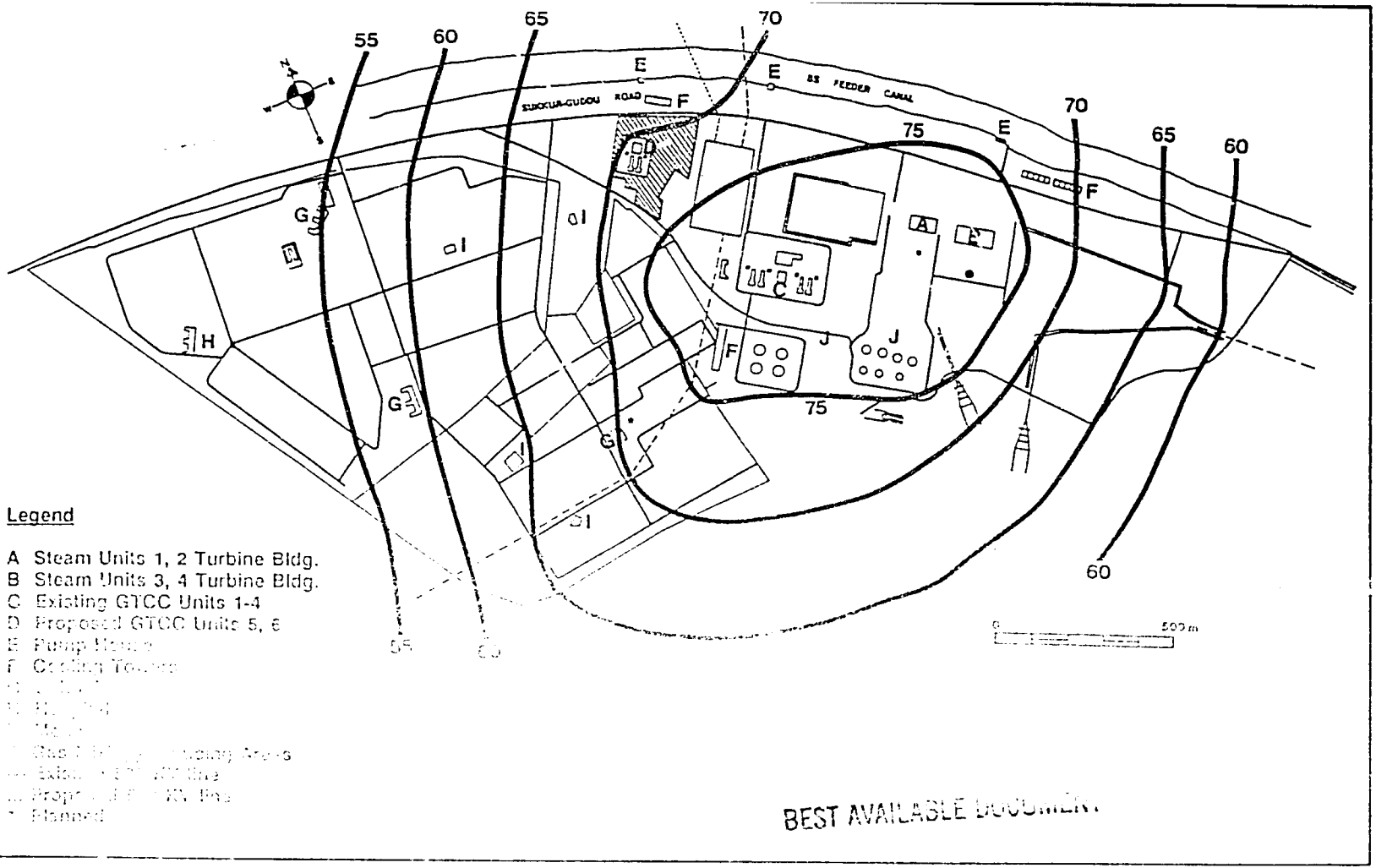

BEST AVAILABLE DOCUMENT

Figure 5.3-3. Predicted L_{dn} Noise Levels (dBA) with Proposed 300 MW GTCC Expansion, with Noise Barrier

KBN

along a 760 m length. A vegetative barrier is estimated to cost Rs 99,863. Since young trees would be planted, it would take several years to see its noise reduction effectiveness. While a solid barrier would be immediately effective, its cost is estimated to be Rs 1,010,975 (a solid, steel reinforced, concrete wall 3 meters high).

5.4 OCCUPATIONAL SAFETY AND HEALTH

5.4.1 Requirements

This section presents recommended general measures to prevent or reduce occupational and safety hazards within the proposed 300 MW GTCC power plant. For more detailed information, the "Encyclopedia of Occupational Safety and Health" (International Labor Office) should be referenced.

5.4.1.1 Occupational Health

Noise

Hearing protection capable of attenuating the noise level to 90 dBA or less should be provided to workers working near the gas turbines and in the gas mixing plant area. Protection should also be provided to workers indoors in the area of the gas and steam turbines. Good maintenance of equipment can also reduce noise levels. An insulated control room should be provided wherein noise levels are 75 dBA or higher. The interiors of all offices located on-site should also be maintained below 75 dBA through proper location, insulation, erection of barriers, or other measures. The cost of personnel hearing protection would be about Rs 90/worker.

Heat

Workers operating in high temperature locations should be given frequent breaks away from the area to reduce and control heat stress. Portable fans located in confined areas should be used to aid ventilation. Appropriate liquids (i.e., water, thirst quencher, etc.) should be made readily available. These measures will not only reduce time lost from the job due to heat stress, but workers will perform better when on the job.

BEST AVAILABLE DOCUMENT

Dust

Fugitive dust emissions should be reduced as much as possible. A temporary measure to reduce dust is the watering of dirt roads. To be effective, water must be applied in an appropriate manner (by water tank truck using proper spray nozzle system), and frequently enough to suppress dust emissions. This may require use of several water trucks. Oil may also be used on dirt roads, but is generally not recommended because of its high cost and its potential to create water pollution through runoff or seepage into the groundwater. More permanent measures for dirt roads are use of gravel as roadbed material and paving with asphalt. Unvegetated areas which remain generally undisturbed should be provided, as possible, with a vegetative covering to minimize windblown dust. This mitigation can also have aesthetic benefits.

5.4.1.2 Safety

Electricity

Every effort should be made to maximize the vertical distance between overhead transmission lines and the ground or structures. Strict procedures for de-energizing electrical equipment should be followed before any maintenance or repair work begins. If the equipment to be worked on cannot be de-energized, a supervisor should be present at all times during the work and should make sure all safety precautions are taken. Electrical equipment should be grounded and installed according to the National Electric Code. All workers involved with electrical equipment should be trained in proper precautions and the hazards involved with electrical equipment and overhead transmission lines. Revival techniques for electrocuted persons (i.e., cardio pulmonary resuscitation) should also be taught to supervisors.

5.4.2 Training

The primary means of preventing occupational exposure and industrial accidents is through proper training of workers. Workers should be made aware of occupational and safety hazards in the workplace, and should be trained in safety and precautionary measures. This includes procedures to be followed in case of an emergency; use of protective equipment;

BEST AVAILABLE DOCUMENT

indications of dangerous conditions; instruction in proper use of all equipment; and the location of fire extinguishers, fire hydrants, and emergency medical treatment stations. Training should encompass all levels of workers, including management. A full-time professional trained in operational safety should be dedicated to a training program. The cost to implement this program is estimated to be Rs 140,000/year.

5.5 DOMESTIC WASTEWATER

As discussed in Subsection 4.1.3.5, mitigation is required for existing sewage treatment. Table 5.5-1 presents a conceptual design for a facultative/maturation pond to handle the existing and anticipated domestic wastewater. WAPDA and the construction contractor currently have the equipment to develop this pond.

5.6 EMERGENCY PREVENTION AND PLANNING

An effective technique in emergency prevention and planning is the preparation and implementation of a Spill Prevention, Control, Countermeasure and Cleanup Plan. This emergency prevention and planning is equally applicable to the existing thermal and GT/HRSG units as well as the proposed 300 MW expansion.

The objectives of the Spill Prevention, Control, Countermeasure and Cleanup Plan include:

1. Prevent or eliminate spills
2. Designate a responsible individual(s) to coordinate and supervise the various control, containment, clean up and disposal of spills.
3. Establish and implement effective procedures for reporting spills.
4. Develop standard operating procedures for control, containment, clean up and disposal of spills.

BEST AVAILABLE DOCUMENT

Table 5.5-1. Conceptual Design for a Facultative/Maturation Pond System for Existing and Anticipated Wastewater from the WAPDA Colony at Guddu

General Design Condition	
Estimated Domestic Wastewater Flow	8993 meters^3/day 8,993,160 liters/day 1650 gallons/minute
Untreated Influent BOD	200 mg/L
Total Daily BOD Loading	1,798,632 grams BOD/day
Facultative Pond Design	
Facultative Pond BOD Loading Criteria	30 grams BOD/m^3-day
Total Required Facultative Pond Volume	59,954 cubic meters
Design Depth	2 meters
Required Facultative Pond Area	29,977 square meters 3.00 hectares 7.4 acres
Maturation Pond Design	
Total Design Retention Time	14 days
Total Design Retention Volume	125,904 cubic meters
Design Depth	1.5 meters
Total Required Area	83,936 square meters 8.39 hectares 20.7 acres
Recommended Number of Ponds in Series	2
Recommended Individual Pond Area	41,968 square meters 4.20 hectares 10.4 acres
Total System Performance	
Anticipated BOD Reduction	87.5%
Anticipated Fecal Coliform Reduction	99.0%

BEST AVAILABLE DOCUMENT

Prevention or elimination of spills is probably the most effective technique to minimize the total release of hazardous or toxic materials. The following is a minimum spill elimination program:

1. Identify all systems handling or using hazardous or toxic materials;
2. Identify all components of the applicable plant systems which could spill, leak, or otherwise release toxic or hazardous materials;
3. Routinely inspect all plant systems handling or using hazardous or toxic materials to assure that all necessary maintenance (with respect to the potential for spillage or leakage) is being performed in a timely and quality manner;
4. Educate all staff operating or maintaining the above systems in the proper techniques and procedures;
5. Assure only trained staff have access to the plant systems handling or using hazardous or toxic materials; and
6. Monitor and report the actions taken to implement the above actions.

The second most important action is the organizational designation of a Spill Manager. This individual (or in the case of shifts, individual for that shift) has responsibility to coordinate and supervise the all various control, containment, clean up and disposal activities associated with spills. Organizationally, these individual must have sufficient authority to mobilize all necessary and appropriate resources to deal with varying degrees of spills, including any catastrophic spills or mishaps.

In the event of a spill, implementation of effective procedures for reporting spills are the first and most important step in initiating control and clean up. The following information should be reported as quickly as possible to the Spill Manager:

1. Location of the spill
2. Source of the spill
3. Time of the spill
4. Volume of the spill

BEST AVAILABLE DOCUMENT

5. Nature or contents of spilled material
6. Potential hazard associated with the spill
7. Has any containment be obtained?
8. Has the spill reached a body of water, ditch or drain?

Finally, effective cleanup is totally dependent on the preparation and implementation of Standard Operating Procedures for containing, removal and disposal of spilt materials. Each of these Standard Operating Procedures will vary dependent on the hazardous or toxic material identified in the system inventory.

For example, fuel oil spilled on soil (a common occurrence at the existing thermal units) should be excavated and properly incinerated. Fuel or other oils spilled on impervious surfaces (such as the plant floor or exterior pavement) should be physically contained, collected with sorbant material and then properly incinerated. Acids or caustics (used in cleaning) should be neutralized and diluted. Any acids or caustics in such large volumes so as they cannot be neutralized should be removed, isolated and concentrated by evaporation; any residual sludge should then be neutralized and properly landfilled. Oils spilled on water should be contained physically, collected with sorbant material and properly incinerated; any oil which cannot be absorbed should be dispersed using appropriate dispersant agents.

Exact procedures will be dependent on the materials identified during material inventory. The Spill Manager must be responsible for identifying all equipment necessary for spill control, all personnel responsible for spill control, and all appropriate protective equipment for the spill control personnel.

5.7 MONITORING PROGRAMS

The recommended monitoring programs are presented in Table 5.7-1.

BEST AVAILABLE DOCUMENT

184

Table 5.7-1. Recommended Monitoring Programs for the Guddu Power Plant Expansion

Discipline	Recommended Program	Rationale	Organization
Air Quality	None	Use of natural gas produces low emissions for most pollutants. Monitoring is not considered necessary.	Not applicable
Noise	Provide WAPDA staff with a noise meter to evaluate mitigations recommended. Noise surveys should be performed quarterly.	Current noise levels exceed world bank guidelines.	WAPDA
Domestic Wastewater	Inspect potential seepage from sewage ponds. Monitor for BOD and fecal coliform in wells down gradient of ponds.	Seepage currently occuring in area.	WAPDA
Cooling Discharge	Monitor for biocides on a quarterly basis.	Biocides are used to remove organisms.	WAPDA
Low Volume Wastes	Measure for pH and total dissolved solids on a monthly basis.	There is no data available on the existing discharges.	WAPDA
Occupational Safety & Health	Monitor worker safety during construction and operation.	Required to assure recommendations are implemented.	WAPDA and Contr
Secondary Infrastructure	Develop dialog with local governments on the recommendations made.	While the WAPDA colony can support many of the infrastructure requirements, there must be follow-up on the implementation of these needs and an interchange with local governments to determine where WAPDA can provide additional assistance.	WAPDA

BEST AVAILABLE DOCUMENT

REFERENCES

Agriculture Research Institute. 1986. Personal Communication. Sind University, Tandojam.

Agriculture Extension Service. 1986. Personal Communication. Sind University, Hyderabad.

Ansari, T.A. Chief Conservator of Forests. 1986. Personal Communication.

Arid Lands Information Center. 1981. Draft Environmental Profile, The Islamic Republic of Pakistan. Bureau of Science and Technology, Office of Forestry, Environment and Natural Resources. USAID, Washington, D.C.

Ashenden, T.W. 1979. The Effect of Long-Term Exposures to SO_2 and NO_2 Pollution on the Growth of Dactylus glomerana L. and Poa pratensis L. Environmental Pollution, 18:249-258.

Auer, A.H. 1978. Correlation of Land Use and Cover with Meteorological Anomalies, Journal of Applied Meteorology. pp. 636-643.

Beg, A.R. 1975. Wildlife Habitats of Pakistan. Biological Sciences Research Division. Pakistan Forest Institue, Peshawar. Bulletin No. 5 (Botany Branch).

Beranek and Newman. 1984. Electric Power Plant Environmental Noise Guide. Report No. 3637 Vol. 1 Second Edition.

Bokhari, S.H.A.S., Pakistan Department of Archaeology. 1986. Personal Communication.

Briggs, G.A. 1971. Some Recent Analyses of Plume Rise Observations. In: Proceedings of the Second International Clean Air Congress. Academic Press, New York, New York.

Briggs, G.A. 1975. Plume Rise Prediction. In: Lectures on Air Pollution and Environmental Impact Analysis. American Meteorological Society, Boston, Massachusetts.

Carlson, R.W. and F.A. Bazzaz. 1982. Photosynthesis an dGrowth Response to Fumigation with SO_2 at Elevated CO_2 for C3 and C4 Plants. Oecologia, 54:50-54.

Cramer, H.E. Company, Inc. 1979. Industrial Source Complex (ISC) Dispersion Model User's Guide, Volumes I and II. Prepared for U.S. Environmental Proteciton Agency.

BEST AVAILABLE DOCUMENT

Dreisinger, B.R. and McGovern, P.C. 1970. Monitoring Atmospheric Sulphur Dioxide and correlating its Effects on Forests and Crops in the Sudbury Area. In: S.N. Linzon, Ed. Proceedings of Impact of Air Pollution on Vegetation. APCA Specialty Conference, Toronto, Ontarios, pp. 11-28.

Environmental Science and Engineering, Inc. (ESE). 1986. Environmental and Social Soundness Assessment. Lakhra Coal Mine and Power Generation Project. Vol. II.

Florida Electric Power Coordinating Group (FCG). 1986. Final Report: A Synthesis of the Florida Acid Deposition Study.

Ferenbaugh, R.W. 1978. Effects of Prolonged Exposure of Pryzonpsis hymenoides to SO_2. Water, Air and Soil Pollution, 10:27-31.

Gibbs and Hill. 1988. Technical information received on-site.

Holzworth, G.C. 1972. Mixing Heights, Wind Speeds, and Potential for Urban Air Pollution Throughout the Contiguous United States. Publication No. AP-101. U.S. Environmental Protection Agency, Research Triangle Park, North Carolina.

Kinsler, Lawrence E. 1967. Fundamental of Acoustics, Second Edition.

Kuresky, K.U. 1978. A Geography of Pakistan. Oxford University Press, Oxford.

Ministry of Finance. 1987. Economic Survey-1986/1987. GOP, Economic Adviser'sWing. Islamabad, 196p.

Newman, J.R. and Schreiber, R.K. 1988. Air Pollution and Wildlife Toxicology: and Overlooked Problem. Environmental Toxicology and Chemistry, Vol. 7, pp. 381-390.

Newman, J.R. 1979. Effects of Industrial Air Pollution on Wildlife. J. Biol. Conserv.

Niewolt, 1977. Meteorology. pp. 3-1.

Population Census Organization. 1983. Main Findings of 1981 Population Census. Government of Pakistan, Statistics Division. Islamabade: Population Census Organization Printing Press, pp. 19.

Pakistan Population Census Organisation, Statistics Division. 1983a. 1981 District Census Report of Hyderabad. Islamabad. District Census Report No. 37.

Population Census Organization. 1983a. 1981 Census Report of Jacobabade (Sind). Province. GOP, Statistics Division. Islamabad: Population Census Organization Printing Press.

BEST AVAILABLE DOCUMENT

Population Census Organization. 1984a. 1981 Census Report of Sind Province. GOP, Statistics Division. Islamabade: Population Census Organization Printing Press.

Population Census Organization. 1984b. 1981 Census Report of Punjab Province. GOP, Statistics Division. Islamabade: Population Census Organization Printing Press.

Population Census Organization. 1984c. 1981 Census Report of Baluchistan Province. GOP, Statistics Division. Islamabade: Population Census Organization Printing Press.

Savitz, David A., Wachtel, Howard, Barnes, Frank A. John, Esther M., and Tvrdik, Jiri G. 1988. Case-Control Study of Childhood Cancer and Exposure to 60 Hertz Magnetic Fields. American Journal of Epidemiology 1988; in Press.

Turner, D.B. 1964. A Diffusion Model for an Urban Area. Journal of Applied Meteorology. Volume 3:83-91. February.

U.S. Agency for International Development (USAID). 1987. Draft Study Plan for Guddu Thermal Power Expansion Project Environmental and Social Soundness Assessment.

U.S. Department of Commerce. 1985. Guideline for Determination of Good Engineering Practice Stack Height (Technical Support Document for the Stack Height Regulations) (Revised).

U.S. Environmental Protection Agency (USEPA). 1974. Information on Levels of Environmental Noise Requisite to Protect Public Health and Welfare With an Adequate Margin of Safety. Doc. 550/9-74-004. Washington, D.C.

USEPA. 1982. Development Document for Final Effluent Limitations Guidelines, New Source Performance Standards, and Pretreatment Scandards for the Steam Electric Point Source Category. Effluent Guidelines Division, Office of Water and Waste Management, USEPA. Washington, D.C. EPA 440/1-82/029.

USEPA. 1987b. Guideline on Air Quality Models (Revised). (Includes Supplement A). EPA Report No. EPA 450/2-78-027R.

USEPA. 1988a. Industrial Source Complex (ISC) Dispersion Model User's Guide (Second Edition, Revised). EPA Report No. EPA [illegible]-88-002a.

USEPA. 1988b. EPA's User''s Network for Applied Modeling of Air Pollution (UNAMAP), Version 6, Change 3, January 4, 1988. U.S. Environmental Protection, Research Triangle Park, North Carolina.

Water and Power Development Authority (WAPDA). 1986. Power Development Plan for Elimination of Load-shedding by 1990. Lahore, Pakistan.

BEST AVAILABLE DOCUMENT

The World Bank. 1984a. Environmental Guidelines. Office of Environmental Affairs.

The World Bank. 1984b. Occupational Health and Safety Guidelines. Office of Environmental Affairs.

The World Bank. 1985. Manual of Industrial Hazard Assessment Techniques.

BEST AVAILABLE DOCUMENT

APPENDIX A

LAND AND WATER RESOURCES

BEST AVAILABLE DOCUMENT

Table 1. Summary of flows into and out of Guddu Barrage for the period April 1987 through March 1988.

Date		Discharge Upstream of Guddu Barrage		Discharge Downstream of Guddu Barrage		Discharge into B.S. Feeder Canal		Discharge into D.P. Feeder Canal		Discharge into Ghotki Feeder Canal	
		(m^3/sec)	(ft^3/sec)	(m^3/sec)	(ft^3/sec)	(m^3/sec)	(ft^3/sec)	(m^3/sec)	(ft^3/sec)	(m^3/sec)	(ft^3/sec)
April 87	1	2,659	93,900	2,702	95,400	0	0	0	0	0	0
	2	2,976	105,100	2,976	105,100	0	0	0	0	0	0
	3	2,178	76,900	2,178	76,900	0	0	0	0	0	0
May 87	1	2,991	105,600	2,948	104,100	0	0	0	0	0	0
	2	3,104	109,600	2,892	102,100	3	100	88	3,100	122	4,300
	3	3,030	107,000	2,549	90,000	62	2,200	221	7,800	198	7,000
June 87	1	5,259	185,700	3,597	127,000	314	11,100	323	11,400	249	8,800
	2	7,004	247,300	5,911	208,700	521	18,400	357	12,600	215	7,600
	3	5,163	182,300	4,061	143,400	583	20,600	351	12,400	167	5,900
July 87	1	6,570	232,000	5,460	192,800	603	21,300	320	11,300	187	6,600
	2	6,511	229,900	5,457	192,700	578	20,400	255	9,000	221	7,800
	3	6,143	216,900	5,118	180,700	496	17,500	269	9,500	261	9,200
August 87	1	6,585	232,500	5,582	197,100	476	16,800	275	9,700	246	8,700
	2	5,571	196,700	4,616	163,000	399	14,100	266	9,400	272	9,600
	3	6,177	218,100	5,341	188,600	363	12,800	232	8,200	241	8,500
Sept. 87	1	8,406	296,800	7,632	269,500	323	11,400	229	8,100	221	7,800
	2	4,885	172,500	4,293	151,600	229	8,100	184	6,500	178	6,300
	3	2,838	100,200	2,110	74,500	283	10,000	212	7,500	232	8,200
Oct. 87	1	3,427	121,000	2,903	102,[illegible]	176	6,200	156	5,500	193	6,800
	2	2,620	92,500	2,334	82,400	6	200	79	2,800	201	7,100
	3	1,872	66,100	1,702	60,100	0	0	25	900	144	5,100
Nov. 87	1	1,645	58,100	1,478	52,200	0	0	25	900	142	5,000
	2	1,294	45,700	1,127	39,800	0	0	34	1,200	133	4,700
	3	1,085	38,300	963	34,000	0	0	48	1,700	88	3,100
Dec. 87	1	1,221	43,100	1,073	37,900	0	0	51	1,200	91	3,200
	2	1,136	40,100	1,039	36,700	8	300	51	1,800	45	1,600
	3	765	27,000	734	25,900	11	400	25	900	0	0
Jan. 88	1	552	19,500	238	8,400	178	6,300	113	4,000	20	700
	2	1,[illegible]13	39,300	685	24,200	167	5,900	136	4,800	127	4,500
	3	1,059	37,400	997	35,200	0	0	51	1,800	28	1,000
Feb. 88	1	1,062	37,500	1,037	36,600	0	0	37	1,300	0	0
	2	1,187	41,900	1,062	37,500	0	0	37	1,300	85	3,000
	3	1,212	42,800	1,059	37,400	0	0	37	1,300	116	4,100
March 88	1	1,124	39,700	1,071	37,800	0	0	34	1,200	20	700
	2	1,003	35,400	949	33,500	0	0	42	1,500	0	0
	3	1,178	41,600	1,113	39,300	0	0	42	1,500	0	0
Average		3,128	110,444	2,694	95,128	161	5,669	128	4,519	123	4,358
Median		2,639	93,200	2,256	79,650	7	250	65	2,300	130	4,600

Note: Flow data are presented for the 10 day period corresponding with the date and the 10 day index. For example, April 87 1 corresponds to the average flow observed for the first 10 days of April 1987.

AVAILABLE DOCUMENT

Water Quality Dispersion Model Description

Pollutant dispersion and resulting water quality impacts of the proposed power plant expansion discharges to the Indus River were estimated using a dispersion model presented by Fischer et al. (1979). The basic equations in the Fischer model are:

and:

Where: C = mass concentration
M = input of mass per unit time
u = cross sectional mean velocity
d = depth of open channel flow
W = width of open channel flow
x = distance in direction of flow
y = distance in direction across flow
x'= dimensionless longitudinal distance
y'= dimensionless transverse distance
Et= transverse mixing coefficient

For conservative substances, the model reflects the following assumptions:

1. The system is in steady state.

2. The system is vertically homogeneous.

3. Lateral and vertical velocities are negligible.

4. The longitudinal eddy diffusion is negligible compared to longitudinal advection.

5. The downstream velocity is constant.

6. The water depth is constant.

7. The reaction rate is zero (i.e. pollutants within the mixing/dispersion plume are conservative).

To execute the dispersion analysis, the various model parameters and coefficients were estimated based on available data and information. Channel geometry (e.g. width and depth) was estimated based on available data. River velocities were estimated based on the estimated flows for the conditions of analysis and Mannings Equation for open channel velocities.

BEST AVAILABLE COPY

Impact modeling conditions were estimated based on the median flow conditions observed during the period April 1987 through March 1988 and the calculated 1 day - 10 year low flow. Cooling water discharge impacts were evaluated under median river flow conditions. For the median flow conditions, low volume wastewater impacts on the Indus River (and the associated mixing and dispersion) were estimated based on dilution with the circulating water discharge. For the 1 day - 10 year low flow, low volume wastewater impacts on the Indus River (and the associated mixing and dispersion) were estimated based on dilution with the cooling tower blowdown discharge.

All dispersion analyses from the stormwater discharges were assumed to occur from a single point discharge were the circulating water return ditch enters the Indus River on the western shoreline.

The most critical model coefficient is the lateral or transverse mixing coefficient (E_t). Fischer et al. (1979) summarized various measurements of the transverse mixing coefficient in natural streams and rivers. To facilitate the comparison of data collected from different rivers under different flow conditions, the transverse dispersion coefficient was normalized by dividing the depth (d) and the shear velocity (u^*). Based on their review and compilation of available information, Fischer et al. (1979) concluded that $Et/du^* = 0.6 + 50\%$.

Based on these data, the Indus River transverse mixing coefficient, in the form of the normalized value Et/du^*, was assumed to be equal to 0.9. Based on the information and conclusions presented by Fischer et al. (1979) and considering the geometry of the River at the project location, this is a reasonable assumption. A summary of the various hydraulic parameters used in the analyses under both flow conditions are summarized in Table 1.

To address the impact of the increased wastewater (associated with proposed expansion) on the existing conditions, the discharge wastewater concentration (associated with proposed expansion) was assumed to be 100% and background concentration (including the wastewater from the existing units) was assumed to be 0%.

For circulating water discharge under median flow conditions, the results of these analyses are presented in detail in Table 2. For low volume wastewater discharges under median flow conditions, the results of these analyses are presented in detail in Table 3. For low volume wastewater discharges under median flow conditions, the results of these analyses are presented in detail in Table 4.

Source: Fischer, H.B, E.J. List, et. al., 1979; Mixing in Inland and Coastal Waters, Chapter 5; Academic Press, Inc., Orlando, Florida.

BEST AVAILABLE COPY

Table 1. Summary of Hydraulic Parameters Used in Modeling

Hydraulic Parameter	Units	Median Annual Flow	1 Day 10 Year Low Flow
Discharge	meters3/second	2,256	181
	feet3/second	79,650	6,400
River Width	meters	1,600	640
	feet	5,250	2,100
Average Velocity	meters/second	0.634	0.334
	feet/second	2.08	1.10
Average Depth	meters	2.22	0.85
	feet	7.29	2.78
Shear Velocity	meters/second	0.063	0.033
	feet/second	0.208	0.110
Transverse Mixing Coef.	meters2/second	0.127	0.0255
	feet2/second	1.365	0.274

BEST AVAILABLE COPY

Table 2. Indus River/Circulating Water Discharge Dispersion Modeling - 1987-1988 Median Annual Flow

Indus River Conditions	
River Channel Width	1600 meters
Average River Depth	2.22 meters
River Discharge	2256 meters3/second
Average Flow Velocity	0.634 meters/second
Flow Shear Velocity	0.063 meters/second
Transverse Mixing Coeff.	0.127 meters2/second
Background Concentration	0 %
Circulating Water Discharge Conditions	
Discharge Flow Rate	7.63 meters3/second
Discharge Concentration	100 %

Distance Downstream (meters)	Mixed Concentration (% of Initial Concentration) at Various Distances (meters) Across Indus River										
	0	160	320	480	640	800	960	1120	1280	1440	1600
500	30.4%	0.0%	0.0%	0.0%	0.0%	0.0%	0.0%	0.0%	0.0%	0.0%	0.0%
1,000	21.5%	0.0%	0.0%	0.0%	0.0%	0.0%	0.0%	0.0%	0.0%	0.0%	0.0%
1,500	17.6%	0.0%	0.0%	0.0%	0.0%	0.0%	0.0%	0.0%	0.0%	0.0%	0.0%
2,000	15.2%	0.0%	0.0%	0.0%	0.0%	0.0%	0.0%	0.0%	0.0%	0.0%	0.0%
2,500	13.6%	0.0%	0.0%	0.0%	0.0%	0.0%	0.0%	0.0%	0.0%	0.0%	0.0%
3,000	12.4%	0.0%	0.0%	0.0%	0.0%	0.0%	0.0%	0.0%	0.0%	0.0%	0.0%
3,500	11.5%	0.0%	0.0%	0.0%	0.0%	0.0%	0.0%	0.0%	0.0%	0.0%	0.0%
4,000	10.8%	0.0%	0.0%	0.0%	0.0%	0.0%	0.0%	0.0%	0.0%	0.0%	0.0%
4,500	10.1%	0.0%	0.0%	0.0%	0.0%	0.0%	0.0%	0.0%	0.0%	0.0%	0.0%
5,000	9.6%	0.0%	0.0%	0.0%	0.0%	0.0%	0.0%	0.0%	0.0%	0.0%	0.0%
5,500	9.2%	0.0%	0.0%	0.0%	0.0%	0.0%	0.0%	0.0%	0.0%	0.0%	0.0%
6,000	8.8%	0.0%	0.0%	0.0%	0.0%	0.0%	0.0%	0.0%	0.0%	0.0%	0.0%
6,500	8.4%	0.1%	0.0%	0.0%	0.0%	0.0%	0.0%	0.0%	0.0%	0.0%	0.0%
7,000	8.1%	0.1%	0.0%	0.0%	0.0%	0.0%	0.0%	0.0%	0.0%	0.0%	0.0%
7,500	7.9%	0.1%	0.0%	0.0%	0.0%	0.0%	0.0%	0.0%	0.0%	0.0%	0.0%
8,000	7.6%	0.1%	0.0%	0.0%	0.0%	0.0%	0.0%	0.0%	0.0%	0.0%	0.0%
8,500	7.4%	0.2%	0.0%	0.0%	0.0%	0.0%	0.0%	0.0%	0.0%	0.0%	0.0%
9,000	7.2%	0.2%	0.0%	0.0%	0.0%	0.0%	0.0%	0.0%	0.0%	0.0%	0.0%
9,500	7.0%	0.2%	0.0%	0.0%	0.0%	0.0%	0.0%	0.0%	0.0%	0.0%	0.0%
10,000	6.8%	0.3%	0.0%	0.0%	0.0%	0.0%	0.0%	0.0%	0.0%	0.0%	0.0%
10,500	6.6%	0.3%	0.0%	0.0%	0.0%	0.0%	0.0%	0.0%	0.0%	0.0%	0.0%
11,000	6.5%	0.4%	0.0%	0.0%	0.0%	0.0%	0.0%	0.0%	0.0%	0.0%	0.0%
11,500	6.3%	0.4%	0.0%	0.0%	0.0%	0.0%	0.0%	0.0%	0.0%	0.0%	0.0%
12,000	6.2%	0.4%	0.0%	0.0%	0.0%	0.0%	0.0%	0.0%	0.0%	0.0%	0.0%
12,500	6.1%	0.5%	0.0%	0.0%	0.0%	0.0%	0.0%	0.0%	0.0%	0.0%	0.0%
13,000	6.0%	0.5%	0.0%	0.0%	0.0%	0.0%	0.0%	0.0%	0.0%	0.0%	0.0%
13,500	5.9%	0.6%	0.0%	0.0%	0.0%	0.0%	0.0%	0.0%	0.0%	0.0%	0.0%
14,000	5.8%	0.6%	0.0%	0.0%	0.0%	0.0%	0.0%	0.0%	0.0%	0.0%	0.0%
14,500	5.7%	0.6%	0.0%	0.0%	0.0%	0.0%	0.0%	0.0%	0.0%	0.0%	0.0%
15,000	5.6%	0.7%	0.0%	0.0%	0.0%	0.0%	0.0%	0.0%	0.0%	0.0%	0.0%
15,500	5.5%	0.7%	0.0%	0.0%	0.0%	0.0%	0.0%	0.0%	0.0%	0.0%	0.0%

BEST AVAILABLE COPY

Table 2. Indus River/Circulating Water Discharge Dispersion Modeling - 1987-1988 Median Annual Flow (Page 2)

Distance Downstream (meters)	Mixed Concentration (% of Initial Concentration) at Various Distances (meters) Across Indus River										
	0	160	320	480	640	800	960	1120	1280	1440	1600
16,000	5.4%	0.7%	0.0%	0.0%	0.0%	0.0%	0.0%	0.0%	0.0%	0.0%	0.0%
16,500	5.3%	0.8%	0.0%	0.0%	0.0%	0.0%	0.0%	0.0%	0.0%	0.0%	0.0%
17,000	5.2%	0.8%	0.0%	0.0%	0.0%	0.0%	0.0%	0.0%	0.0%	0.0%	0.0%
17,500	5.1%	0.8%	0.0%	0.0%	0.0%	0.0%	0.0%	0.0%	0.0%	0.0%	0.0%
18,000	5.1%	0.9%	0.0%	0.0%	0.0%	0.0%	0.0%	0.0%	0.0%	0.0%	0.0%
18,500	5.0%	0.9%	0.0%	0.0%	0.0%	0.0%	0.0%	0.0%	0.0%	0.0%	0.0%
19,000	4.9%	0.9%	0.0%	0.0%	0.0%	0.0%	0.0%	0.0%	0.0%	0.0%	0.0%
19,500	4.9%	1.0%	0.0%	0.0%	0.0%	0.0%	0.0%	0.0%	0.0%	0.0%	0.0%
20,000	4.8%	1.0%	0.0%	0.0%	0.0%	0.0%	0.0%	0.0%	0.0%	0.0%	0.0%
20,500	4.8%	1.0%	0.0%	0.0%	0.0%	0.0%	0.0%	0.0%	0.0%	0.0%	0.0%
21,000	4.7%	1.0%	0.0%	0.0%	0.0%	0.0%	0.0%	0.0%	0.0%	0.0%	0.0%
21,500	4.6%	1.1%	0.0%	0.0%	0.0%	0.0%	0.0%	0.0%	0.0%	0.0%	0.0%
22,000	4.6%	1.1%	0.0%	0.0%	0.0%	0.0%	0.0%	0.0%	0.0%	0.0%	0.0%
22,500	4.5%	1.1%	0.0%	0.0%	0.0%	0.0%	0.0%	0.0%	0.0%	0.0%	0.0%
23,000	4.5%	1.1%	0.0%	0.0%	0.0%	0.0%	0.0%	0.0%	0.0%	0.0%	0.0%
23,500	4.4%	1.1%	0.0%	0.0%	0.0%	0.0%	0.0%	0.0%	0.0%	0.0%	0.0%
24,000	4.4%	1.2%	0.0%	0.0%	0.0%	0.0%	0.0%	0.0%	0.0%	0.0%	0.0%
24,500	4.4%	1.2%	0.0%	0.0%	0.0%	0.0%	0.0%	0.0%	0.0%	0.0%	0.0%
25,000	4.3%	1.2%	0.0%	0.0%	0.0%	0.0%	0.0%	0.0%	0.0%	0.0%	0.0%

BEST AVAILABLE COPY

Table 3. Indus River/Low Volume Wastewater Dispersion Modeling - 1987-1988 Median Annual Flow

Indus River Conditions	
River Channel Width	1600 meters
Average River Depth	2.22 meters
River Discharge	2256 meters3/second
Average Flow Velocity	0.634 meters/second
Flow Shear Velocity	0.063 meters/second
Transverse Mixing Coeff.	0.127 meters2/second
Background Concentration	0 %
Circulating Water Discharge Conditions	
Circ. Water Discharge Flow Rate	7.63 meters3/second
Circ. Water Discharge Concentration	0 %
Low Volume Wastewater Discharge Conditions	
Low Volume Discharge Flow Rate	0.166666 meters3/second
Low Volume Discharge Concentration	100 %
Low Volume Concentration after Initial Mixing with Circ. Water Discharge	2.137 %

Distance Downstream (meters)	Mixed Concentration (% of Initial Concentration) at Various Distances (meters) Across Indus River										
	0	160	320	480	640	800	960	1120	1280	1440	1600
500	0.66%	0.00%	0.00%	0.00%	0.00%	0.00%	0.00%	0.00%	0.00%	0.00%	0.00%
1,000	0.47%	0.00%	0.00%	0.00%	0.00%	0.00%	0.00%	0.00%	0.00%	0.00%	0.00%
1,500	0.38%	0.00%	0.00%	0.00%	0.00%	0.00%	0.00%	0.00%	0.00%	0.00%	0.00%
2,000	0.33%	0.00%	0.00%	0.00%	0.00%	0.00%	0.00%	0.00%	0.00%	0.00%	0.00%
2,500	0.30%	0.00%	0.00%	0.00%	0.00%	0.00%	0.00%	0.00%	0.00%	0.00%	0.00%
3,000	0.27%	0.00%	0.00%	0.00%	0.00%	0.00%	0.00%	0.00%	0.00%	0.00%	0.00%
3,500	0.25%	0.00%	0.00%	0.00%	0.00%	0.00%	0.00%	0.00%	0.00%	0.00%	0.00%
4,000	0.23%	0.00%	0.00%	0.00%	0.00%	0.00%	0.00%	0.00%	0.00%	0.00%	0.00%
4,500	0.22%	0.00%	0.00%	0.00%	0.00%	0.00%	0.00%	0.00%	0.00%	0.00%	0.00%
5,000	0.21%	0.00%	0.00%	0.00%	0.00%	0.00%	0.00%	0.00%	0.00%	0.00%	0.00%
5,500	0.20%	0.00%	0.00%	0.00%	0.00%	0.00%	0.00%	0.00%	0.00%	0.00%	0.00%
6,000	0.19%	0.00%	0.00%	0.00%	0.00%	0.00%	0.00%	0.00%	0.00%	0.00%	0.00%
6,500	0.18%	0.00%	0.00%	0.00%	0.00%	0.00%	0.00%	0.00%	0.00%	0.00%	0.00%
7,000	0.18%	0.00%	0.00%	0.00%	0.00%	0.00%	0.00%	0.00%	0.00%	0.00%	0.00%
7,500	0.17%	0.00%	0.00%	0.00%	0.00%	0.00%	0.00%	0.00%	0.00%	0.00%	0.00%
8,000	0.17%	0.00%	0.00%	0.00%	0.00%	0.00%	0.00%	0.00%	0.00%	0.00%	0.00%
8,500	0.16%	0.00%	0.00%	0.00%	0.00%	0.00%	0.00%	0.00%	0.00%	0.00%	0.00%
9,000	0.16%	0.00%	0.00%	0.00%	0.00%	0.00%	0.00%	0.00%	0.00%	0.00%	0.00%
9,500	0.15%	0.01%	0.00%	0.00%	0.00%	0.00%	0.00%	0.00%	0.00%	0.00%	0.00%
10,000	0.15%	0.01%	0.00%	0.00%	0.00%	0.00%	0.00%	0.00%	0.00%	0.00%	0.00%
10,500	0.14%	0.01%	0.00%	0.00%	0.00%	0.00%	0.00%	0.00%	0.00%	0.00%	0.00%
11,000	0.14%	0.01%	0.00%	0.00%	0.00%	0.00%	0.00%	0.00%	0.00%	0.00%	0.00%
11,500	0.14%	0.01%	0.00%	0.00%	0.00%	0.00%	0.00%	0.00%	0.00%	0.00%	0.00%
12,000	0.14%	0.01%	0.00%	0.00%	0.00%	0.00%	0.00%	0.00%	0.00%	0.00%	0.00%
12,500	0.13%	0.01%	0.00%	0.00%	0.00%	0.00%	0.00%	0.00%	0.00%	0.00%	0.00%

BEST AVAILABLE COPY

Table 3. Indus River/Low Volume Wastewater Dispersion Modeling - 1987-1988 Median Annual Flow (Page 2)

Distance Downstream (meters)	Mixed Concentration (% of Initial Concentration) at Various Distances (meters) Across Indus River										
	0	160	320	480	640	800	960	1120	1280	1440	1600
13,000	0.13%	0.01%	0.00%	0.00%	0.00%	0.00%	0.00%	0.00%	0.00%	0.00%	0.00%
13,500	0.13%	0.01%	0.00%	0.00%	0.00%	0.00%	0.00%	0.00%	0.00%	0.00%	0.00%
14,000	0.13%	0.01%	0.00%	0.00%	0.00%	0.00%	0.00%	0.00%	0.00%	0.00%	0.00%
14,500	0.12%	0.01%	0.00%	0.00%	0.00%	0.00%	0.00%	0.00%	0.00%	0.00%	0.00%
15,000	0.12%	0.01%	0.00%	0.00%	0.00%	0.00%	0.00%	0.00%	0.00%	0.00%	0.00%
15,500	0.12%	0.02%	0.00%	0.00%	0.00%	0.00%	0.00%	0.00%	0.00%	0.00%	0.00%
16,000	0.12%	0.02%	0.00%	0.00%	0.00%	0.00%	0.00%	0.00%	0.00%	0.00%	0.00%
16,500	0.12%	0.02%	0.00%	0.00%	0.00%	0.00%	0.00%	0.00%	0.00%	0.00%	0.00%
17,000	0.11%	0.02%	0.00%	0.00%	0.00%	0.00%	0.00%	0.00%	0.00%	0.00%	0.00%
17,500	0.11%	0.02%	0.00%	0.00%	0.00%	0.00%	0.00%	0.00%	0.00%	0.00%	0.00%
18,000	0.11%	0.02%	0.00%	0.00%	0.00%	0.00%	0.00%	0.00%	0.00%	0.00%	0.00%
18,500	0.11%	0.02%	0.00%	0.00%	0.00%	0.00%	0.00%	0.00%	0.00%	0.00%	0.00%
19,000	0.11%	0.02%	0.00%	0.00%	0.00%	0.00%	0.00%	0.00%	0.00%	0.00%	0.00%
19,500	0.11%	0.02%	0.00%	0.00%	0.00%	0.00%	0.00%	0.00%	0.00%	0.00%	0.00%
20,000	0.11%	0.02%	0.00%	0.00%	0.00%	0.00%	0.00%	0.00%	0.00%	0.00%	0.00%
20,500	0.10%	0.02%	0.00%	0.00%	0.00%	0.00%	0.00%	0.00%	0.00%	0.00%	0.00%
21,000	0.10%	0.02%	0.00%	0.00%	0.00%	0.00%	0.00%	0.00%	0.00%	0.00%	0.00%
21,500	0.10%	0.02%	0.00%	0.00%	0.00%	0.00%	0.00%	0.00%	0.00%	0.00%	0.00%
22,000	0.10%	0.02%	0.00%	0.00%	0.00%	0.00%	0.00%	0.00%	0.00%	0.00%	0.00%
22,500	0.10%	0.02%	0.00%	0.00%	0.00%	0.00%	0.00%	0.00%	0.00%	0.00%	0.00%
23,000	0.10%	0.02%	0.00%	0.00%	0.00%	0.00%	0.00%	0.00%	0.00%	0.00%	0.00%
23,500	0.10%	0.02%	0.00%	0.00%	0.00%	0.00%	0.00%	0.00%	0.00%	0.00%	0.00%
24,000	0.10%	0.03%	0.00%	0.00%	0.00%	0.00%	0.00%	0.00%	0.00%	0.00%	0.00%
24,500	0.09%	0.03%	0.00%	0.00%	0.00%	0.00%	0.00%	0.00%	0.00%	0.00%	0.00%
25,000	0.09%	0.03%	0.00%	0.00%	0.00%	0.00%	0.00%	0.00%	0.00%	0.00%	0.00%

BEST AVAILABLE COPY

Table 4. Indus River/Low Volume Wastewater Dispersion Modeling - One Day 10 Year Low Flow

Indus River Conditions	
River Channel Width	640 meters
Average River Depth	0.85 meters
River Discharge	181 meters3/second
Average Flow Velocity	0.334 meters/second
Flow Shear Velocity	0.033 meters/second
Transverse Mixing Coeff.	0.0255 meters2/second
Background Concentration	0 %
Cooling Tower Blowdown Discharge Conditions	
Cooling Tower Blowdown Discharge Rate	0.023 meters3/second
Cooling Tower Blowdown Concentration	0 %
Low Volume Wastewater Discharge Conditions	
Low Volume Discharge Flow Rate	0.166666 meters3/second
Low Volume Discharge Concentration	100 %
Low Volume Concentration after Initial Mixing with Circ. Water Discharge	87.72 %

Distance Downstream (meters)	Mixed Concentration (% of Initial Concentration) at Various Distances (meters) Across Indus River										
	0	64	128	192	256	320	384	448	512	576	640
500	5.38%	0.00%	0.00%	0.00%	0.00%	0.00%	0.00%	0.00%	0.00%	0.00%	0.00%
1,000	3.80%	0.00%	0.00%	0.00%	0.00%	0.00%	0.00%	0.00%	0.00%	0.00%	0.00%
1,500	3.10%	0.00%	0.00%	0.00%	0.00%	0.00%	0.00%	0.00%	0.00%	0.00%	0.00%
2,000	2.69%	0.00%	0.00%	0.00%	0.00%	0.00%	0.00%	0.00%	0.00%	0.00%	0.00%
2,500	2.40%	0.01%	0.00%	0.00%	0.00%	0.00%	0.00%	0.00%	0.00%	0.00%	0.00%
3,000	2.19%	0.03%	0.00%	0.00%	0.00%	0.00%	0.00%	0.00%	0.00%	0.00%	0.00%
3,500	2.03%	0.04%	0.00%	0.00%	0.00%	0.00%	0.00%	0.00%	0.00%	0.00%	0.00%
4,000	1.90%	0.07%	0.00%	0.00%	0.00%	0.00%	0.00%	0.00%	0.00%	0.00%	0.00%
4,500	1.79%	0.09%	0.00%	0.00%	0.00%	0.00%	0.00%	0.00%	0.00%	0.00%	0.00%
5,000	1.70%	0.12%	0.00%	0.00%	0.00%	0.00%	0.00%	0.00%	0.00%	0.00%	0.00%
5,500	1.62%	0.14%	0.00%	0.00%	0.00%	0.00%	0.00%	0.00%	0.00%	0.00%	0.00%
6,000	1.55%	0.17%	0.00%	0.00%	0.00%	0.00%	0.00%	0.00%	0.00%	0.00%	0.00%
6,500	1.49%	0.19%	0.00%	0.00%	0.00%	0.00%	0.00%	0.00%	0.00%	0.00%	0.00%
7,000	1.44%	0.21%	0.00%	0.00%	0.00%	0.00%	0.00%	0.00%	0.00%	0.00%	0.00%
7,500	1.39%	0.23%	0.00%	0.00%	0.00%	0.00%	0.00%	0.00%	0.00%	0.00%	0.00%
8,000	1.34%	0.25%	0.00%	0.00%	0.00%	0.00%	0.00%	0.00%	0.00%	0.00%	0.00%
8,500	1.30%	0.27%	0.00%	0.00%	0.00%	0.00%	0.00%	0.00%	0.00%	0.00%	0.00%
9,000	1.27%	0.29%	0.00%	0.00%	0.00%	0.00%	0.00%	0.00%	0.00%	0.00%	0.00%
9,500	1.23%	0.30%	0.00%	0.00%	0.00%	0.00%	0.00%	0.00%	0.00%	0.00%	0.00%
10,000	1.20%	0.31%	0.01%	0.00%	0.00%	0.00%	0.00%	0.00%	0.00%	0.00%	0.00%
10,500	1.17%	0.33%	0.01%	0.00%	0.00%	0.00%	0.00%	0.00%	0.00%	0.00%	0.00%
11,000	1.15%	0.34%	0.01%	0.00%	0.00%	0.00%	0.00%	0.00%	0.00%	0.00%	0.00%
11,500	1.12%	0.35%	0.01%	0.00%	0.00%	0.00%	0.00%	0.00%	0.00%	0.00%	0.00%
12,000	1.10%	0.36%	0.01%	0.00%	0.00%	0.00%	0.00%	0.00%	0.00%	0.00%	0.00%
12,500	1.08%	0.37%	0.01%	0.00%	0.00%	0.00%	0.00%	0.00%	0.00%	0.00%	0.00%

BEST AVAILABLE COPY

Table 4. Indus River/Low Volume Wastewater Dispersion Modeling - One Day 10 Year Low Flow (Page 2)

Distance Downstream (meters)	Mixed Concentration (% of Initial Concentration) at Various Distances (meters) Across Indus River										
	0	64	128	192	256	320	384	448	512	576	640
13,000	1.05%	0.38%	0.02%	0.00%	0.00%	0.00%	0.00%	0.00%	0.00%	0.00%	0.00%
13,500	1.03%	0.38%	0.02%	0.00%	0.00%	0.00%	0.00%	0.00%	0.00%	0.00%	0.00%
14,000	1.02%	0.39%	0.02%	0.00%	0.00%	0.00%	0.00%	0.00%	0.00%	0.00%	0.00%
14,500	1.00%	0.40%	0.02%	0.00%	0.00%	0.00%	0.00%	0.00%	0.00%	0.00%	0.00%
15,000	0.98%	0.40%	0.03%	0.00%	0.00%	0.00%	0.00%	0.00%	0.00%	0.00%	0.00%
15,500	0.97%	0.41%	0.03%	0.00%	0.00%	0.00%	0.00%	0.00%	0.00%	0.00%	0.00%
16,000	0.95%	0.41%	0.03%	0.00%	0.00%	0.00%	0.00%	0.00%	0.00%	0.00%	0.00%
16,500	0.94%	0.42%	0.04%	0.00%	0.00%	0.00%	0.00%	0.00%	0.00%	0.00%	0.00%
17,000	0.92%	0.42%	0.04%	0.00%	0.00%	0.00%	0.00%	0.00%	0.00%	0.00%	0.00%
17,500	0.91%	0.42%	0.04%	0.00%	0.00%	0.00%	0.00%	0.00%	0.00%	0.00%	0.00%
18,000	0.90%	0.43%	0.05%	0.00%	0.00%	0.00%	0.00%	0.00%	0.00%	0.00%	0.00%
18,500	0.88%	0.43%	0.05%	0.00%	0.00%	0.00%	0.00%	0.00%	0.00%	0.00%	0.00%
19,000	0.87%	0.43%	0.05%	0.00%	0.00%	0.00%	0.00%	0.00%	0.00%	0.00%	0.00%
19,500	0.86%	0.43%	0.05%	0.00%	0.00%	0.00%	0.00%	0.00%	0.00%	0.00%	0.00%
20,000	0.85%	0.43%	0.06%	0.00%	0.00%	0.00%	0.00%	0.00%	0.00%	0.00%	0.00%
20,500	0.84%	0.44%	0.06%	0.00%	0.00%	0.00%	0.00%	0.00%	0.00%	0.00%	0.00%
21,000	0.83%	0.44%	0.06%	0.00%	0.00%	0.00%	0.00%	0.00%	0.00%	0.00%	0.00%
21,500	0.82%	0.44%	0.07%	0.00%	0.00%	0.00%	0.00%	0.00%	0.00%	0.00%	0.00%
22,000	0.81%	0.44%	0.07%	0.00%	0.00%	0.00%	0.00%	0.00%	0.00%	0.00%	0.00%
22,500	0.80%	0.44%	0.07%	0.00%	0.00%	0.00%	0.00%	0.00%	0.00%	0.00%	0.00%
23,000	0.79%	0.44%	0.08%	0.00%	0.00%	0.00%	0.00%	0.00%	0.00%	0.00%	0.00%
23,500	0.78%	0.44%	0.08%	0.00%	0.00%	0.00%	0.00%	0.00%	0.00%	0.00%	0.00%
24,000	0.78%	0.44%	0.08%	0.01%	0.00%	0.00%	0.00%	0.00%	0.00%	0.00%	0.00%
24,500	0.77%	0.44%	0.09%	0.01%	0.00%	0.00%	0.00%	0.00%	0.00%	0.00%	0.00%
25,000	0.76%	0.44%	0.09%	0.01%	0.00%	0.00%	0.00%	0.00%	0.00%	0.00%	0.00%

BEST AVAILABLE COPY

Table 1. Conceptual Design for a Facultative/Maturation Pond System For Existing and Anticipated Wastewater from the WADDA Colony at Guddu.

General Design Condition	
Estimated Domestic Wastewater Flow	8993 meters3/day 8,993,160 liters/day 1650 gallons/minute
Untreated Influent BOD	200 mg/L
Total Daily BOD Loading	1,798,632 grams BOD/day
Facultative Pond Design	
Facultative Pond BOD Loading Criteria	30 grams BOD/m3-day
Total Required Facultative Pond Volume	59,954 cubic meters
Design Depth	2 meters
Required Facultative Pond Area	29,977 square meters 3.00 hectares 7.4 acres
Maturation Pond Design	
Total Design Retention Time	14 days
Total Design Retention Volume	125,904 cubic meters
Design Depth	1.5 meters
Total Required Area	83,936 square meters 8.39 hectares 20.7 acres
Recommended Number of Ponds in Series	2
Recommended Individual Pond Area	41,968 square meters 4.20 hectares 10.4 acres
Total System Performance	
Anticipated BOD Reduction	87.5%
Anticipated Fecal Coliform Reduction	99.0%

BEST AVAILABLE COPY

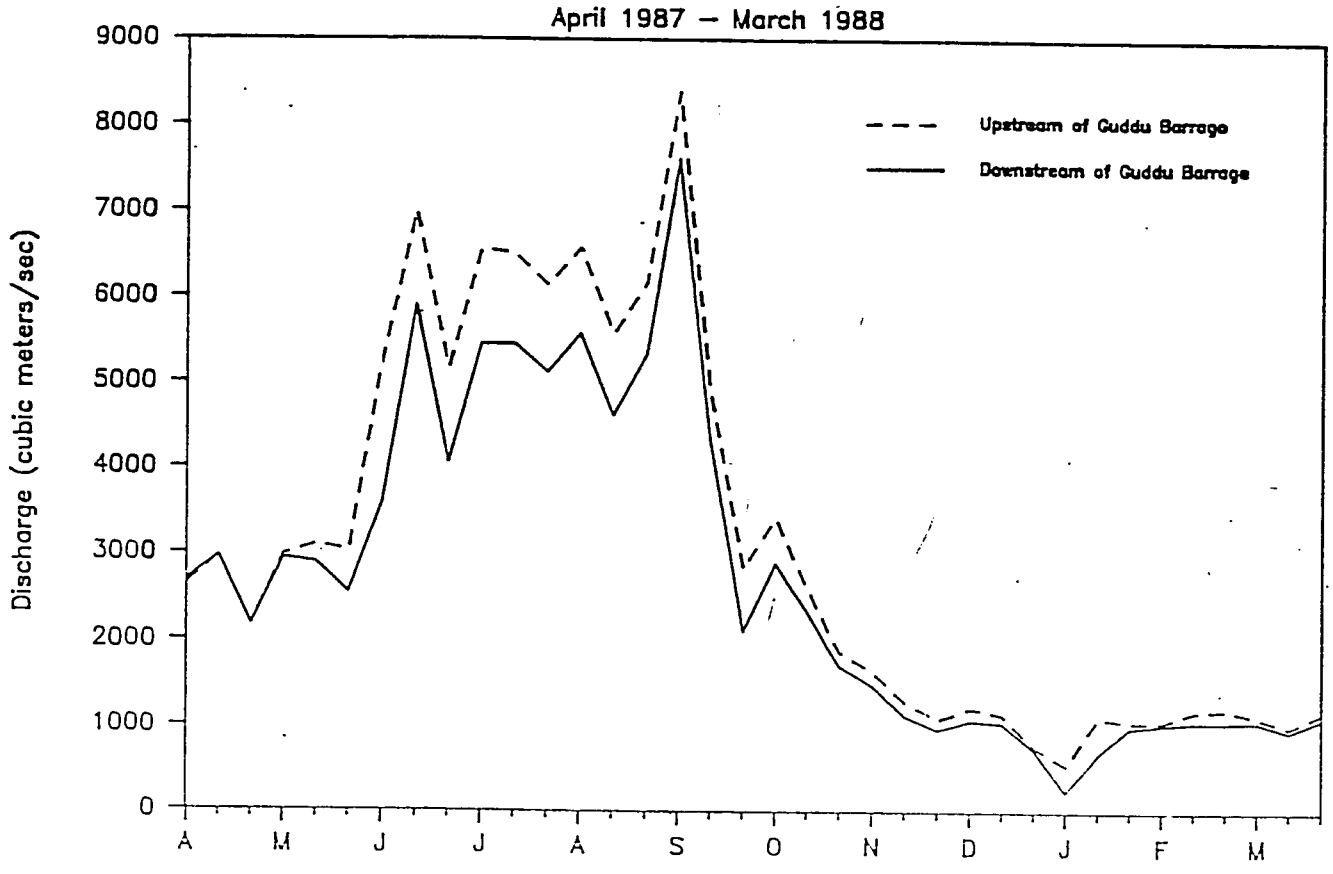

Figure 3.1-6. Indus River Discharge, April 1987 - March 1988

KBN

BEST AVAILABLE COPY

302

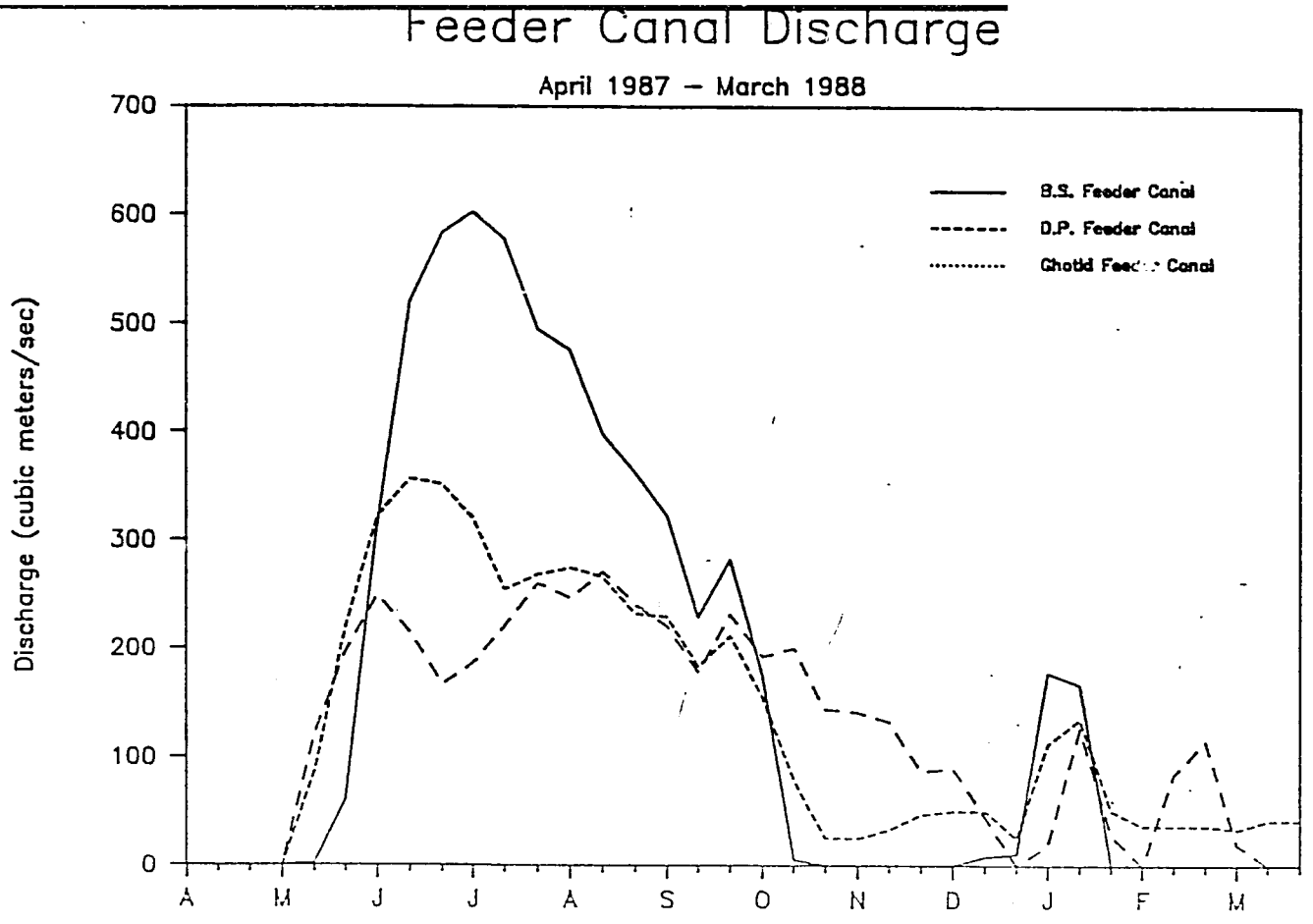

Figure 3.1-7. Feeder Canal Discharge April 1987 - March 1988

KBN

BEST AVAILABLE COPY

203

ATTACHMENT I

On February 7, 1985, Zia-ul-Hag, Deputy Secretary, Ministry of Housing and Works, Environment and Urban Affairs Division, requested USAID to supply a detailed Environmental Impact Assessment (EIA) for Guddu Power Plant Expansion Project and to provide information listed in an EIA Pro Forma. This attachment provides a cross reference between the Pro Forma and the Environmental Assessment (EA) and technical support documents. The environmental information requested in the Pro forma can, therefore, be obtained through a review of the sections, sub-sections, and tables referenced in the following pages.

BEST AVAILABLE COPY

PRO FORMA FOR ENVIRONMENTAL IMPACT ASSESSMENT

Types of Information		Information or Sections of Environmental and Social Soundness Assessment
1.	General	
1.1	Name of the Project:	Guddu Power Plant Expansion Project.
1.2	Official address at which correspondence can be made:	Address for mine to be determined.
1.3	Name and address of consultant appointed, if any:	Not applicable (N.A.).
1.4	Name, designation, and address of official authorized to deal with this Questionnaire/Proforma:	
1.5	Date on which letter of intent was issued:	N.A.
2.	Process Details	
2.1	Production Schedule:	See Section 1.3 for project description.
2.1.1	List of main products proposed to be produced with designed daily production or capacity:	See Section 1.3; 7,200 MW (nominal) hours/day at average capacity.
2.1.2	List of by-products produced with designed daily product capacity:	No by-products in significant quantities produced.
2.1.3	Time phasing for achieving full production capacity:	Approximately 3 years

BEST AVAILABLE COPY

Types of Information	Information or Sections of Environmental and Social Soundness Assessment
2.2 <u>Raw Materials Consumption</u>:	
2.2.1 List all raw materials with daily consumption at full production capacity:	See Table 4.1-2.
2.2.2 List all process chemicals/materials consumed with approximate quantities:	See Subsection 4.1.3
2.2.3 Is any recycled material from the waste of your project or any other project used in the process? If so, please specify quantities and source.	N.A.
2.2.4 Is any material salvaged from your waste stream re-usable economically for any other?	N.A.
2.3 <u>Manufacturing Process</u>:	N.A.
2.3.1 Source of process know-how:	
2.3.2 Give a brief description of the process technology utilized with a flow-chart. (Flow-chart of the process should be attached.)	
2.3.3 Have you any foreign collaboration?	

BEST AVAILABLE COPY

Types of Information	Information or Sections of Environmental and Social Soundness Assessment
2.4 <u>Energy Consumption</u>:	
2.4.1 Source of energy: a) In-plant generation. b) Public supply.	See discussion in Sections 1.3, 2.1 and 2.4.
2.4.2 If energy is generated in plant, type and quantity of fuel daily consumed:	See Sections 1.3 and 4.1-2.
3. <u>General Environment (Site climate settlement)</u>:	
3.1 <u>Site</u>:	
3.1.1 Where is the plant proposed to be sited?	See discussions Sections 1.1, 1.3, and 2.4; see Figures 1-1 and 2-1.
Attach map showing topographical features of the area.	
3.1.2 Elevation above mean sea level	Approximately 76-77 m.
3.1.3 Area of land proposed to be acquired:	See Figures 1-1 and 2-1.
3.1.4 Area proposed to be built up or developed:	See Figures 1-1 and 2-1.
3.1.5 Present use of the land: agriculture/forest/grazing/settlement/fallow	See discussions in Subsection 3.3.2.
3.1.6 Indicate the nature of topography near the site: plains/valley/hilly	See discussion in Subsection 3.1.2.2.

BEST AVAILABLE COPY

Types of Information		Information or Sections of Environmental and Social Soundness Assessment
3.1.7	Specify site character: river basin/coastal/ estuarine/land-locked	See discussion in Subsections 3.1.2.1 and 3.1.2.2.
3.1.8	Is the land situated within any municipal or corporation jurisdiction?	See Subsection 3.3.1.
3.1.9	Is the land situated in an approved industrial zone or estate? If so, please specify.	Yes, see discussion in Subsection 3.3.1.
3.1.10	What of the following features exist within 30 km of the site?	See discussions in following Subsections:
	i) Human settlements: specify population.	3.3.1.2.
	ii) Agricultural land: specify crops.	3.3.2.1.
	iii) Grazing land:	3.3.2.2.
	iv) Fisheries:	3.3.2.3.
	v) Forest/sanctuary/ natural park:	3.3.2.5.
	vi) Nullahs/streams/rivers:	3.1.2.1.
	vii) Ponds/lakes/dams:	3.1.2.1.
	viii) Estuary/sea:	N.A.
	ix) Hills/mountains:	3.1.2.2.
	x) Archaeological/Historic/ Cultural/Scenic sites/ Scientific Institutions/ Hospitals/Sanatoria/ Religious importance:	3.3.3.2.
	xi) Industries, specify:	3.3.4.
3.1.11	Type of flora and fauna, especially wildlife, endangered species:	See discussion in Subsections 3.2.1 and 3.2.2.

BEST AVAILABLE COPY

Types of Information		Information or Sections of Environmental and Social Soundness Assessment
3.1.12	Present employment or occupational pattern in the area:	See discussions in Subsection 3.3.1.3.
3.1.13	Prominent Endemic Disease (Fluorosis, Malaria, Filaria, Malnutrition, etc.).	See Subsection 3.3.1.5.
3.1.14	Mortality rates: (Crude, Infant, Material):	See Subsection 3.3.1.5.
3.1.15	Any other observation regarding state of the environment:	
3.2	Climate:	
3.2.1	Indicate the climatic conditions at the site (e.g., arid, semi-arid, etc.)	See discussion in Subsections 3.1.1.1 and 3.1.1.2.
3.2.2.	Rainfall yearly average. Range:	See discussion in Subsections 3.1.1.1 and 3.1.1.2.
3.2.3	Temperature seasonal. Ranges:	See discussion in Subsections 3.1.1.1 and 3.1.1.2.
3.2.4	Provide information on speed and direction of wind.	See discussion in Subsections 3.1.1.1 and 3.1.1.2.
3.3	Settlement:	
3.3.1	Total number of persons proposed to be employed:	
	(a) During construction:	
	(b) After completion:	See discussion in Subsections 4.3.2 and 4.3.3.

BEST AVAILABLE COPY

Types of Information	Information or Sections of Environmental and Social Soundness Assessment
3.3.2 Do you propose to build a township/ housing quarters for your employees?	See discussion in Subsections 4.3.2 and 4.2.3.
3.3.3 Area allocated for above:	See discussion in Subsections 4.3.2 and 4.3.3.
3.3.4 Population to be accommodated:	See discussion in Subsections 4.3.2 and 4.3.3.
3.3.5 Distance from township to plant site:	See discussion in Subsection 3.3.1.1.
3.3.6 Services provided in township: i) Water - daily consumption: ii) Sewer system: iii) Sewage treatment: iv) Garbage disposal: v) Drainage: vi) Any other?	See discussion in Subsection 3.3.1.
4. <u>Water Requirements</u>:	
4.1 What treatment is given before use, if any?	See discussion in Subsection 4.1.3.1
4.2 Average daily quantities and characteristics of water consumed: i) Process and wash: ii) Cooling: iii) Sanitary: iv) Total:	See discussion in Subsection 4.1.3.
4.3 Are adequate quantities of water available: i) At present: ii) For future expansion:	See discussion in Subsection 4.1.3.1.

BEST AVAILABLE COPY

Types of Information		Information or Sections of Environmental and Social Soundness Assessment
5.	<u>Wastewater Discharges</u>:	
5.1	Total quantity of wastewater discharged from the project per day:	See discussion in Subsections 4.1.3.2 and 4.1.3.3
5.2	Wastewater discharges per day from: i) Process and wash (with break up, where possible): ii) Cooling: iii) Sanitary: iv) Total:	See discussion in Subsections 4.1.3.2 and 4.1.3.3.
5.3	How do you propose to discharge the waste-water? i) Separate streams/ combined: ii) Continuous/inter-mittent:	See discussion in Subsections 4.1.3.2 and 4.1.3.3.
5.4	Type of treatment proposed to be adopted: Give details and flow chart.	See discussion in Subsections 3.1.2 and 4.1.3.
5.5	What standards for treatment effluent do you propose to adopt?	See discussion in Subsection 1.4
5.6	Mode of final discharge: (open channel/pipe-line/covered drains)	See discussion in Subsections 3.1.2.1, 4.1.3.2, 4.1.3.3 and 4.1.3.6

BEST AVAILABLE COPY

Types of Information		Information or Sections of Environmental and Social Soundness Assessment
5.7	Point of final discharge: fallow land/ agricultural land/ sewer/river/lake bay/ estuary/sea. Give details of outfall design.	See discussion in Subsections 3.1.2.1, 4.1.3.2 and 4.1.3.6.
5.8	Is any portion of the wastewater proposed to be recycled? If so, give details.	See discussion in Subsections 4.1.3.2 and 4.1.3.6.
5.9	What methods do you propose to adopt for handling and disposal of sludge from treatment plants?	See discussion in Subsection 4.1.3.5.
5.10	Indicate available information on wastewater characteristics before treatment as below. a) Physical Parameters: Temperature, pH, color, turbidity, odor, total solids, total suspended solids, and total volatile solids. b) Chemical Parameters: Acidity, total, and pH; Alkalinity, total and pH; Hardness, total; BOD; COD; Oil and Grease; total N; Phosphates, total; Chlorides; Sulphates; Sodium; Potassium; Calcium; and Magnesium.	See discussion in Subsections 3.1.2.1, 4.1.3.3 and 4.1.3.5

BEST AVAILABLE COPY

Types of Information		Information or Sections of Environmental and Social Soundness Assessment
5.11	What other specific toxic substances are discharged? Please specify nature and concentration: (inorganics, organics, including pesticides and organic chlorine compounds, phenols, lignin, mercaptans, heavy metals, and radioactive substances).	See discussion in Subsections 3.1.2.1, 4.1.3.3 and 4.1.3.5.
6.	<u>Solid Wastes: Process and Treatment Plants</u>	Not significant from project.
6.1	Total quantity of solid wastes in tonnes per day:	
6.2	Nature of Wastes: Lumps/Granules/Dust/ Slurry/Sludge	Not significant from project.
6.3	Type of waste (organic, inorganic, ash, glass, natal, etc.)	Not significant from project.
6.4	Method proposed for disposal, including treatment plant: Landfill/dumping/sea/ lagoon/marsh/composting/ incineration/sold	See discussion in Subsection 4.1.3.5.
6.4.1	If landfill, possibility of leaching of toxic compounds into soil, ground water, or surface water:	Not significant from project.

BEST AVAILABLE DOCUMENT

Types of Information		Information or Sections of Environmental and Social Soundness Assessment
6.4.2	If incinerated, details of incineration plant and procedures:	N.A.
6.6	Do you anticipate any problems regarding collection, handling, and transport of solid wastes?	Not significant from project.
6.7	Are there any problems of subsequent pollution of air, water, or soil likely at the place of disposal of solid wastes?	See discussion in Subsections 3.1.2.1 and 4.1.3.5.
7.	<u>Atmospheric Emissions</u>	
7.1	<u>Emission from fuel burning</u>:	See Table 4.1-4.
7.1.1	Anticipated quantity of stack emissions:	See Table 4.1-5.
7.1.2	Temperature of emission:	See Table 4.1-3.
7.1.3	Composition of emission:	See Table 4.1-5.
	a) Particulates and smoke nature and quantity b) Gases: Sulphur dioxide Nitrogen oxides Hydrocarbons Carbon monoxide Moisture Other, specify.	

BEST AVAILABLE DOCUMENT

Types of Information	Information or Sections of Environmental and Social Soundness Assessment
7.2 <u>Emissions from process</u>:	N.A.
7.2.1 Anticipated emissions, quantity:	
7.2.2 Temperature:	
7.2.3 Composition of emissions	
a) Particulates, nature and quantity	
b) Gases:	
i) Sulphur dioxide	
ii) Nitrogen oxides	
iii) Carbon monoxide	
iv) Ammonia	
v) Acide Mists	
vi) Halogens	
vii) Hydrocarbons	
viii) Mercaptans	
ix) Others, specify:	
7.3 Height of stack(s), for atmospheric emissions:	See Table 4.1-3.
7.4 Proposed air pollution control system:	See discussion in Subsection 2.4.5.
7.5 Proposed method of handling and disposal of wastes trapped by pollution arresting equipment:	N.A.
7.6 Are any standards of emission prescribed for or adopted by your industry?	See discussion in Section 1.4.

BEST AVAILABLE DOCUMENT

Types of Information		Information or Sections of Environmental and Social Soundness Assessment
8.	Other types of pollution:	
8.1	Is your project industry likely to cause noise pollution?	See discussion in Subsection 4.1.2.
8.2	Is your project industry likely to cause any odor pollution? If yes, what measures are proposed to be taken?	N.A.
8.3	Is your project industry likely to cause any thermal pollution? If yes, what measures are proposed to be taken?	See discussion in Subsection 4.1.3.2.
8.4	Is your project industry likely to cause radioactive pollution? If yes, what measures are proposed to be taken?	N.A.
8.5	Describe the nature and extent of pollution nuisance caused during construction phases and measures taken to contain the same.	See discussion in Section 4.3.
8.6	Work Environment Hygiene and Housekeeping:	
8.6.1	What major health/safety hazards are likely in the working environment in your factors?	See discussion in Subsection 4.3.7.

BEST AVAILABLE DOCUMENT

Types of Information		Information or Sections of Environmental and Social Soundness Assessment
8.6.2	Describe the industrial hygiene measures you propose to adopt.	See discussion in Section 5.4.
8.6.3	What provision have you made to conform to health and safety requirements as per Factories Act?	See discussion in Section 5.4.
9.	Management of Pollution Control:	
9.1	Give details of the organizational set-up you propose to have for pollution control.	See discussion in Section 5.0.
9.2	What is the level of expertise of the person in charge of pollution control?	
9.3	Do you propose to monitor the pollution from your industry? If yes, give details.	
9.4	What laboratory facilities do your propose to have for the above?	
9.5	Give details of operation and maintenance of facilities you propose to have for treatment plants and pollution monitoring and control equipment.	

BEST AVAILABLE DOCUMENT

Types of Information	Information or Sections of Environmental and Social Soundness Assessment

10. Cost of Pollution Control:

10.1 Total expenditure proposed for pollution monitoring and control:

Type of expenditure	Amount (Rs)	Percentage of total capital investment/operating expenditure of the industry
Capital		
Recurring (including monitoring)		

11.1 Climate and Air Quality: See discussion in Subsection 4.1.1

i) Will the project modify the local wind behavior?
ii) Will the project have an impact upon the local precipitation/humidity pattern?
iii) Will the project have an impact upon the local temperature pattern?
iv) Will the project generate and disperse atmospheric pollutants?
v) Will the project generate any intense odors?

11.2 Water: See discussions in Subsection 4.1.3.

i) Will the project alter the hydrological balance?
ii) Will the project effect the ground water required in terms of quality/quantity, depth, and direction of flow?

BEST AVAILABLE DOCUMENT

Types of Information	Information or Sections of Environmental and Social Soundness Assessment

iii) Will dewatering methods be necessary to undertake excavation?

iv) Will the project induce a major sediment influx into area water bodies?

v) Will the project impede the natural drainage pattern and/ or induce alteration of channel form?

vi) Will the project impair the existing surface waters through filling, dredging, water extraction, or other detrimental practices?

vii) Will recreation or aesthetic values be endangered?

11.3 <u>Geotechnical</u>: See discussions in Subsection 4.1.3.9

i) Is there risk of damage or loss resulting from tectonic/seismic activity and/or volcanic activity?

ii) Are there mineral resources of potential value close to the project?

iii) Will there be an increase in rock deposition/degradation as a result of the project?

iv) Are there potential dangers related to slow failure or falling rock?

v) Is there risk of major ground subsidence associated with the project?

BEST AVAILABLE DOCUMENT

Types of Information	Information or Sections of Environmental and Social Soundness Assessment
11.4 **Soil**:	See discussion in Subsection 4.1.3.9
i) Will there be a substantial loss of soil due to construction or operational practices?	
ii) Will there be a risk of losses due to instability?	
iii) Will project cause or be exposed to liquefaction of soils in slopes or foundations?	
iv) In case of settlement/heave, will there be a risk of damage of structure or services?	
v) Will the project modify the property of impacted soil?	
11.5 **Ecology**:	See discussion in Subsections 4.2.1, 4.2.2 and 4.2.3.
i) Are there rare/endangered species which require protection?	
ii) Are there species which are particularly susceptible to human activities?	
iii) Would the loss of certain plant species deny food or habitat to wildlife species?	
iv) Are there any unusual population communities of plants that may be of scientific value?	
v) Will project activities impair natural productivity?	

BEST AVAILABLE DOCUMENT

Types of Information	Information or Sections of Environmental and Social Soundness Assessment
11.6 <u>Land Use and Land Capability</u>: i) Will the project conflict with existing or proposed land use? ii) Will the project degrade land capability types?	See discussion in Subsections 4.3.1, 4.3.2 and 4.3.5.
11.7 <u>Noise and Vibration</u>: i) Will the internal noise level present a potential risk to the hearing of workers? ii) Will the safe operation of the project be affected? iii) Will the project create noise levels which will cause annoyance or discomfort to nearby properties? iv) Will the project cause damage to structures, both natural and man-made, due to vibration? v) Will the vibration levels within the plant be such that there is a risk to employees' safety?	See discussion in Subsection 4.1.2.
11.8 <u>Visual Quality</u>: i) Will the content of the scene perceived by the residents of the surrounding area be adversely affected by the project? ii) Will the coherence of the surrounding area be impaired by the project?	See discussion in Section 4.3.

BEST AVAILABLE DOCUMENT

ATTACHMENT II

Proceedings of Scoping Session
Held at the WAPDA Club, Guddu
on April 13, 1988 at 10:30 A.M. - 1:00 P.M.
Official Lunch for all Participants 1:00 - 2:30 P.M.

Recitation from Holy Quran was performed by Hafiz Karim Bakhsh. In his opening address Mr. Rashid Ahmad Ansari, Chief Engineer, Guddu Barrage Project, WAPDA, welcomed the participants. WAPDA had extended invitations to a diverse group of persons which included WAPDA and Government of Sind Officials, political and social leaders, and individuals residing in and around Guddu. Mr. Ansari highlighted the importance and need for conducting this scoping session.

Mr. Nazim H. Siddiqui, General Manager (Design & Development), Thermal, WAPDA, in his address traced the history of power generation in Pakistan. With the establishment of WAPDA in 1958, Guddu was chosen as a suitable place for power generation. Guddu is ideally located close to the three provinces of Sind, Baluchistan and Punjab. Additional advantages are a 500 kV transmission line passing through Guddu and sufficient water supply. In view of the goals set forth by the Prime Minister to eliminate load-shedding by 1990, USAID in Pakistan was asked for financial assistance to increase the capacity of the existing power generation at Guddu. The U.S. government responded favorably to the request and such a contract will be signed for the addition of 300 MW to present power generating capacity. WAPDA is also the first organization in the country to realize the importance of environmental impact assessments. Natural gas, which is a relatively clean fuel, will be used for the expansion project at Guddu. Therefore, any negative effects on the environment in this region should be minimal. At other places such as Lakhra, the fuel type is coal which has a sulphur content of 6 to 7 percent. Such fuel types require careful studies for assessment of pollution problems. A team of environmental specialists selected by USAID is here to carry out a complete environmental assessment for this project.

BEST AVAILABLE DOCUMENT

Mr. Rashid Ahmad Ansari, Chief Engineer, presented an overview of the Guddu existing power generation facilities and the proposed expansion project.

Dr. Muhammad Hanif, Principal Scientific Officer at PCSIR Laboratories in Lahore, represented the Ministry of Housing and Works, Environment and Urban Affairs Division, Government of Pakistan, Islamabad. He welcomed the local Zamindars (landlords), and political as well as social representatives of the general public. Until 1980, industrialization progressed in Pakistan without regards to environmental pollution problems. In 1983 the Government of Pakistan, realizing the significance of growing environmental concerns, issued an ordinance to provide for the control of pollution and preservation of a healthy environment.

Environmental Protection Agencies were created in the provinces. In Punjab, considerable work has been done by the provincial agency. Unfortunately, in the Sind Province not much progress has been observed in this field. He asked the public representatives present to support the government in solving the environmental problems pertaining to their areas. The Bhopal incident in India, where 2,500 people were killed, 50,000 disabled and thousands injured, is an example why the government should be concerned and try to prevent such a disaster from taking place in Pakistan.

An industrial waste pollution survey of 51 industries has been completed recently in Pakistan. In Kasur District alone, 100 tanneries are operating, where, due to inappropriate drainage systems, waste water stagnates, causing unhygienic conditions and posing a real threat to the physical health of the public. The government is assisting the public in taking protective measures for improving such hazardous conditions.

Dr. Waldemar Albertin, Environmental Advisor of USAID, Islamabad, represented Mr. John Morgan, the Mission's Environmental Officer and Chief of the Power Division, USAID, Islamabad. He stated that USAID is obligated to comply with Federal U.S. Government regulations, World Bank Guidelines and the Government of Pakistan's requirements in all matters related to environmental control and protection. All projects funded by USAID are affected. The design contractors for the GUDDU project, Gibbs and Hill, and

BEST AVAILABLE DOCUMENT

their sub-contractors KBN Engineering, who fielded the team for the environmental assessment of Guddu Expansion Project were introduced. He stated that air and water pollution are of great concern and very important issues world-wide and indicated that the Indus Blind Dolphin, which is found mostly between Guddu and Sukkur Barrages and was declared an endangered species by the World Wildlife Association, is in no danger from this project. There appears to be no environmental threat from this expansion project. However, within the framework of Pakistan's federal, provincial and district laws, every possible environmental aspect will be considered during the environmental assessment of the Guddu Expansion Project.

Mr. Lal Ghani, Project Director, WAPDA Guddu Power Generation and Expansion Project, presented a description of the expansion project. Its objective is to contribute to the overall power generation developmental program of the country. Cooling water supply for this project will be met through the Begari Feeder. The basic fuel for this plant will be natural gas. Around Guddu there are three large gas fields. A pipeline network exists and is already connected to the existing plant. The project will assist in the development of agriculture and industry and will provide jobs for 19 engineers, 200 technicians and nearly 300 semi-skilled and unskilled laborers. Since this project is based on high technology, some engineers will have the opportunity to receive additional training in U.S.A. Everyone takes pride in the fact that the existing projects, which are also highly sophisticated, are being operated by local engineers. The expansion project will take 2 to 2-1/2 years to complete. Preference for hiring employees will be given to persons from the province of Sind. The project will certainly improve the unemployment situation in the region.

Tea Break.

Dr. James R. Newman, Principal Scientist of KBN Engineering, introduced himself, his company, and his colleague Mr. Platt. They are working as subcontractors to Gibbs and Hill on the environmental and social soundness assessment for this project. He is the assistant manager, and a zoologist and environmentalist by training. Mr. Herbert Platt, is a geographer and a

BEST AVAILABLE DOCUMENT

specialist in socio-economics and in public health. KBN worked previously on Lakhra Coal Mines and Khalifa Point projects. Two other members of this team, the air pollution specialist and the water quality specialist will come to Pakistan on April 16, 1988 to complete the ESSA for this project. He encouraged the audience to voice concerns, so that they are duly addressed and mitigation strategies can be adopted. With the help of slides he outlined in detail the ESSA study plan.

1. Air Resource Impact

* Increased noise and vibration
* Increased air emissions including emissions from stack

2. Water Resource Impacts

* Run off and sedimentation
* Change in surface water quality
* Change in thermal conditions from discharge

3. Cultural Resource Impacts

* Loss of land use
* Increased traffic
* Effects of noise and vibration
* Induced development
* Disruption of cultural values and patterns
* Change in employment and economy

4. Biological Resource Impacts

* Effects from spills and effluent discharge
* Effects on vegetation and wildlife from air emissions

BEST AVAILABLE DOCUMENT

Open Question and Answer Session

The audience was invited to ask questions and seek clarification about whatever concerns they had. Mr. Arshad Ali Shah, Chairman, Town Committee, Guddu thanked WAPDA and USAID for inviting them to the scoping session. Mr. Arshad Ali Shah and Mr. Bakhshan Shah, a Zamindar from Guddu raised the following issues:

* inadequate provision for employment of people dwelling in the immediate vicinity of the plant.

* Untreated water pools outside the plant and close to their houses, resulting in unhygienic physical health conditions.

* Lack of proper access roads and bridges to avoid the surrounding stagnant pools of dirty waste water.

* deaths and injuries from presently installed and transmission lines adjacent to the plant and close to their dwellings and fields.

Mr. Nazim H. Siddiqui, General Manager (Design and Development), Thermal, WAPDA addressed the above mentioned concerns to the satisfaction of the audience. He stated that employment rules do not allow differentiation or preferential treatment of any localities within the same province. Sind domicile holders are most eligible and are given top priority for jobs in Sind province. Sites of dirty, stagnant waters will be inspected and remedial measures taken. Problems with transmission lines will be analyzed. The following points were raised by Mr. A.R. Kharal, Conservator of Forests, Sukkur Division.

* How will air temperature and quality of air be affected by emissions from the stack?

* What opportunity exists for local scientists to work on this project?

* What interaction will be required with the wildlife department?

BEST AVAILABLE DOCUMENT

Dr. Newman from KBN addressed these questions. An air quality specialist will be arriving soon to look into the air resource impacts in greater detail. However, since the fuel used is natural gas, there is no apparent danger of hazardous emissions into the air. Stack gas dilution with air will leave no effect on the increase in ambient temperature. Mr. Kharal's all other concerns will also be taken care of as part of the ESSA study.

Mr. Kharal offered the use of his library and cooperation to Dr. Newman's team.

BEST AVAILABLE DOCUMENT

Proceedings of Scoping Section
Held at the WAPDA Club, Guddu
On April 13, 1988 at 10:30 A.M. - 1:00 P.M.
Official Lunch for all Participants 1:00 - 2:30 P.M.

List of Participants

1.	Mr. Nazim H. Siddiqui	General Manager (Des. & Dev.), Thermal, WAPDA
2.	Mr. Rashid Ahmad Ansari	Chief Engineer, Guddu Barrage
3.	Mr. Lal Ghani	Project Director, Guddu Power Station
4.	Dr. Muhammad Hanif	Principal Scientific Officer, PCSIR Lab., Lahore
5.	Mr. M. Waseem Choudhry	USAID, Islamabad
6.	Dr. Wally Albertin	USAID, Islamabad
7.	Mr. Najib Murtaza	USAID, Islamabad
8.	Mr. Atta Bhatti	USAID, Islamabad
9.	Mr. S.D.I. Reimers	Gibbs & Hill, Inc.
10.	Mr. L.J. Munder	Gibbs & Hill, Inc.
11.	Mr. Sami Shah	Gibbs & Hill, Inc.
12.	L.J. Munder	Gibbs & Hill
13.	Dr. James R. Newman	Principal Scientist, KBN
14.	Mr. Herbert Platt	Staff Geographer, KBN
15.	Dr. D.M. Qazi	Medical Superintendent, WAPDA, Guddu
16.	Mr. A.R. Kharal	Conservator of Forests, Sukkur
17.	Mr. Abdul Waris	Director (Design) Therma, WAPDA, Lahore
18.	Mr. A.W. Malik	Superintending Engineer, Civil, WAPDA, Guddu
19.	Mr. Muhammad Multiullah	Resident Engineer II, Guddu
20.	Hafiz Karim Bakhsh	Senoir Engineer (Mech.), Units 3 & 4, Guddu
21.	Mr. Iftikharuddeen	Senoir Chemist (Training), Guddu
22.	Mr. Noor Muhammad Beg	Director Chemical, TPS, Guddu
23.	Sh. Hazoor Bakhsh	ARE (M)-I, Guddu
24.	Mr. Sikandar Ali Abro	Resident Engineer I, Guddu
25.	Mr. Muhammad Ahmad	Director Technical, WAPDA
26.	Mr. Muhammad Iqbal	Executive Engineer, Combined Cycle Project
27.	Mr. N.A. Samejo	Resident Engineer III, Guddu
28.	Col. (Retd.) Hafizur Rehman	CSO, Guddu
29.	Sardar Alamgir KhanMachka	Chairman, Union Council, Machka
30.	Mr. Muhammad Punal Mazari	Member, District Council, Machka
31.	Mr. Qaisar Khan Dasti	Zamindar, Guddu
32.	Mr. Gul Muhammad Dasti	Councillor, Khambra, Murid, Shakh
33.	Mr. M. Sultan Khan	Councillor, Town Committee, Guddu
34.	Mr. Ghulam Qadir Dasti Baloch	Councillor, Kashmore
35.	Mr. Bakht Ali Mazari	Vice Chairman, Town Committee, Guddu
36.	Mr. Ghulam Rasool	Councillor, Guddu
37.	Haji Hussain Bakhsh	Vice Chairman, Union Council, Khambra
38.	Syed Bakhshan Shah	Zamindar, Guddu
39.	Pir Han KhanMazari	Chairman, Union Council, Khewali
40.	Mr. Arshad Ali Shah	Chairman, Town Committee, Guddu
41.	Mr. Ali Zaman	Councillor, Town Committee, Guddu
42.	Mr. A. Rahim Mirani	Secretaty, Town Committee, Guddu
43.	Mr. Muhammad Ali Mazari	Councillor, Town Committee, Guddu
44.	Mr. Dhani Bakhsh	Councillor, Town Committee, Guddu
45.	Mr. Abdullah Bhatti	Councillor, Town Committee, Guddu

NOT AVAILABLE DOCUMENT