PN-ABU-891

POWER GENERATION COMPLEX

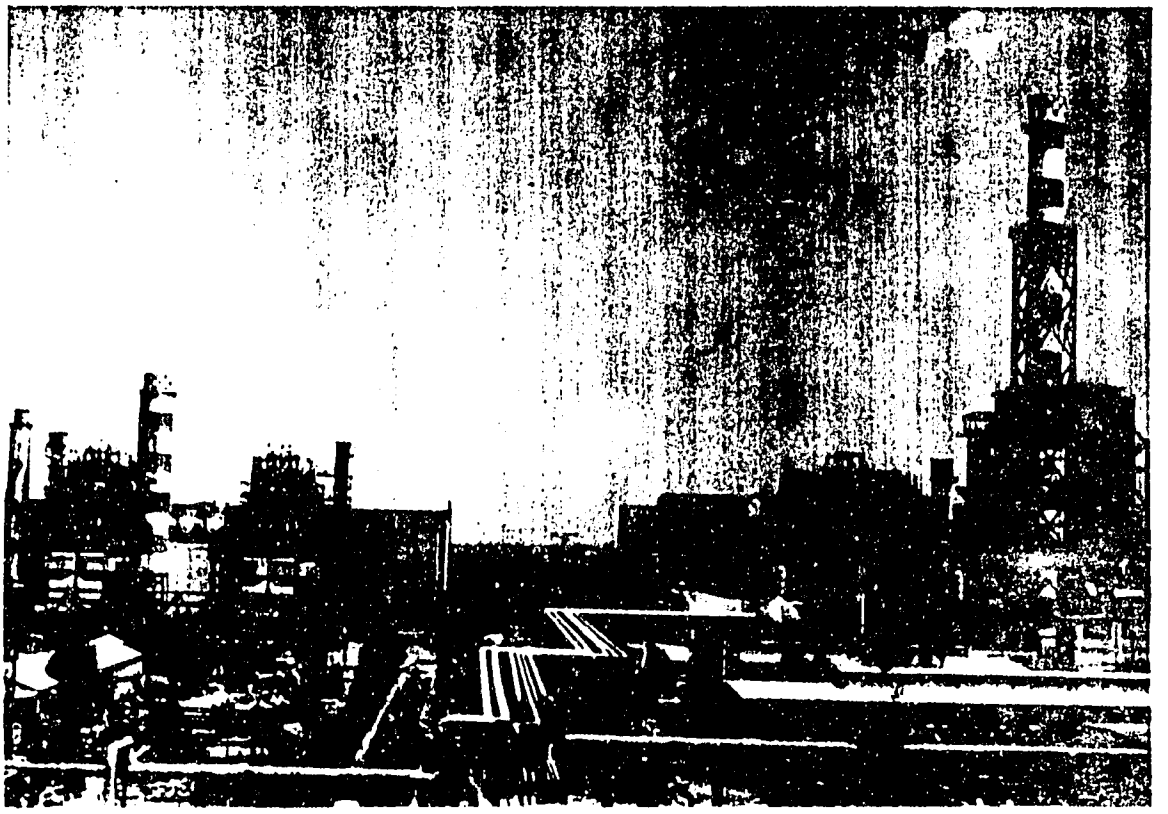

108/R

BEST AVAILABLE DOCUMENT

بسم الله الرحمن الرحيم

In the Name of Allah,
the Beneficent, the Merciful

BEST AVAILABLE DOCUMENT

T.P.S GUDDU

THE LARGEST THERMAL POWER STATION OF PAKISTAN

The Back Bone of National Economy

PREPARED & COMPILED BY

Memon Abdul Malik

SENIOR ENGINEER

APPROVED BY

Syed Abid Ali

CHIEF ENGINEER

BEST AVAILABLE DOCUMENT

CONTENTS

INTRODUCTION

* Physical Location 1
* Pakistan WAPDA 5
* Thermal Power Stations of WAPDA 7
* Guddu Moves Ahead 9
* Significant Technical Data Units I&II 13
* Significant Technical Data Unit III 21
* Significant Technical Data Unit IV 25

COMBINED CYCLE THE NEW ERA

600 MW Combined Cycle Power Station

* Salient Features of Gas Turbines 35
* Gas Turbine Description 37
* Significant Technical Data 44
* Salient Features of Steam Units 51

405 MW COMBINED CYCLE EXPANSION PROJECT

* Scope of the Project 65
* Significant Technical Data 66

BEST AVAILABLE DOCUMENT

GENERAL

* Chemical Section 72
* Fuel 83
* Training 90
* Arboriculture 91
* Colony 93
* Education 94
* Recreation 95
* Health 96

STATISTICS

* Organization Chart
* Power Generating Units
* Unit Wise Plant Performance
  - Since Commissioning
  - During the Year 1991.

BEST AVAILABLE DOCUMENT

PHYSICAL LOCATION

Guddu , the largest Thermal Power Generation Complex of Pakistan is situated on the right bank of river Indus (Down Stream) at Guddu Barrage, 10 K.M. ahead of Kashmore, District Jacobabad in the province of Sindh.

Guddu is connected with rest of the Country both by Road and Rail. Telex, Telefax and Telephonic facilities have connected Guddu with rest of the world. A small metaled air strip is also available for operation of small aircraft for VIP visitors and in emergencies.

BEST AVAILABLE DOCUMENT

/

THERMAL POWER STATION GUDDU

* The symbolic representation of Pakistan.
* The joint venture of Pakistani People coming right from Karachi to Kaghan.
* A green Island, full of love , peace and brotherhood, along river Indus.
* A bunch of dedicated & smiling Engineers, Affectionate Doctors, and Loving workers.
* A lovesome spot in the deserted extreme corner of Sind Province, rendering its services with devotion to all mankind irrespective of caste, creed and religion.
* Where technology is activated, skill is motivated, and services are dedicated with fun anu fantasy.
* Where everyone is busy to abide strictly the QUAID's motto;"WORK,WORK, & WORK" for betterment of motherland Pakistan.

BEST AVAILABLE DOCUMENT

THE LARGEST THERMAL COMPLEX AT GUDDU

BECAUSE OF

* MID COUNTRY PLACE.
* AVAILABILITY OF GAS FIELDS.
* AVAILABILITY OF WATER.
* AVAILABILITY OF 1200 BUILT-IN RESIDENCES.

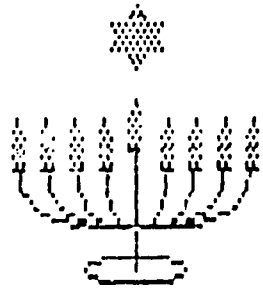

BEST AVAILABLE DOCUMENT

GUDDU A MID COUNTRY PLACE

(A LOGICAL CHOICE)

WAPDA in 1963 carried out Power market-survey and Power system analysis to prepare integrated plan for 10 years developments. It established the need of construction of a big Thermal Power Station (800-1000 MW) in Upper Sindh. Many sites were considered. Guddu being A MID COUNTRY place was one of the most under-developed parts of our Country, found to be ideally situated on the junction of Sind, Baluchistan and Punjab, flanked by SUI and MARI GAS FIELDS. Presence of Guddu Barrage with an additional facility of 1200 built-in Residences vacated by irrigation department on completion of Guddu Barrage , made it A LOGICAL CHOICE for construction of the proposed Power Station which was finally picked up by the Planners.

BEST AVAILABLE DOCUMENT

PAKISTAN

WATER AND POWER DEVELOPMENT AUTHORITY

(WAPDA)

The importance of energy,key to the progress and prosperity can hardly be ignored . Particularly in the present desperate strive of all under-developed countries of the World to develop their power resources which is pre-requisite for the nations march towards the cherished goal of material, welfare and prosperity. Power development is, therefore , an index of Agricultural and Industrial development of a country . Pakistan is making similar strides.

In this crusade, WAPDA, being on the vanguard, has been contributing to the Pakistan's efforts to make country self sufficient in this field of national endeavor. With its vast net work of hydel and thermal power complexes all over the country. The dedicated team of Engineers and Technicians of WAPDA are engaged in a gigantic task of reconstruction of nation for a better and happier future.

To match the magnitude or work required for the

BEST AVAILABLE DOCUMENT

development of water and power resources of the country on a multipurpose basis, the Water and Power Development Authority was set up in 1958 as a semiautonomous body.

This institutional device aimed to centralize planning and designing of relevant schemes and their execution hither-to done by the provincial Governments at a pace much slower than required by the exigency of the situation.

Wapda took over generation, transmission and distribution of Power in the country(except in Karachi) in 1959, and has brought about big developments in these Sectors since then.

At the time of independence in August 1947, the Country's Power Generation capacity stood at a meager 13 Megawatts. When Wapda took over the electricity in 1959, the power generating capacity was 119 Megawatts.

At present (December 1991) the total installed capacity of Wapda system (Excluding Karachi) has reached 7005 MW which comprises of 4107 MW Thermal and 2898 MW Hydel Generation.

BEST AVAILABLE DOCUMENT

THERMAL POWER STATIONS OF WAPDA

Thermal Power Stations.	Year of Commissioning	Generating Units	Installed Capacity (MW)
1-Guddu Steam & Gas Turbine	1974-88	Steam Turbines 2 x 110 MW 2 x 210 MW Gas Turbines 1 x 9 MW 4 x 100 MW Combined Cycle Steam 2 x 100 MW	1249
2-Kot Addu Gas Turbine.	1987-89	10 x 100 MW	1000
3-Multan Steam	1960-63	4 x 65 MW 1 x 5.7MW	266
4-Faisalabad Gas Turbines.	1975	8 x 25 MW	200
5-Faisalabad Steam	1967	2 x 66 MW	132
6-Shahdara Gas Turbines.	1966-69	2 x 13.25 MW 4 x 14.75 MW	86
7-Sukkur Steam	1965-67	4 x 12.5 MW	50
8-Kotri Gas Turbine	1970-81	2 x 15 MW 4 x 25 MW	130

BEST AVAILABLE DOCUMENT

9-Quetta	1965-84	Steam: 2 x 7.5 MW Gas Turbine: 1 x 7.0 MW 1 x 12.25 MW 1 x 25 MW 1 x 35 MW	94
10-MESCO Steam (Taken over)	1981	2 x 10 MW	20
13-Jamshoro Steam	1990-91	1 x 250 MW 3 x 210 MW	880
		Total:	4107MW

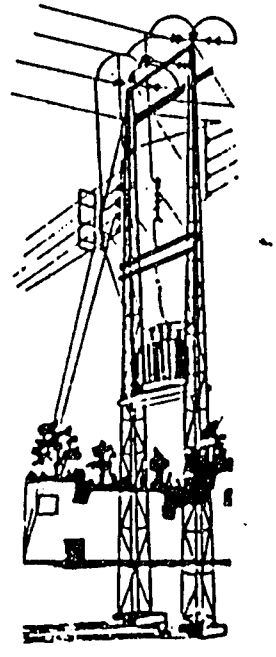

BEST AVAILABLE DOCUMENT

GUDDU MOVES AHEAD

STEP BY STEP

STAGE-I

M/s Skoda export of Czechoslovakia supplied , erected and commissioned the first two biggest thermal unit of 110 MW each and one black start Gas Turbine of 9.0 M.W. in 1974 :

Capacity of Plant	229000 K.Watt.
Total Cost	705.12 Million Rupees.
Foreign Exchange	153.1 Million Rupees.

STAGE-II

M/s Technopromexport of U.S.S.R.supplied and installed a Thermal Generating Unit of 210 MW which was commissioned in 1980. This unit became the biggest generating unit of the Country. By adding this unit , the installed capacity of Guddu Thermal Power Station was raised to 439 M.W.

Capacity of the Plant.	210000 K.Watt.

BEST AVAILABLE DOCUMENT

Total Cost.	1905.910 Million Rupees.
Foreign Exchange	572.00 Million Rupees.

STAGE-III

M/s C.M.I.C.China , supplied, erected and commissioned one 210 MW Unit. The unit was commissioned in December,1985.The total installed capacity was raised upto 649 M.W.

Capacity of the Plant.	210000 K.Watt.
Total Cost.	2040 Million Rupees.
Foreign Exchange.	716.00 Million Rupees.

STAGE-IV

M/s G.E of U.S.A. supplied, installed and commissioned the Combined Cycle generating units in the 4th phase in which 4 x 100 MW Gas Turbines were installed in the first stage and 2 x 100 M.W Steam Units were added in 2nd stage.

Capacity of the Gas Turbine Generating Units	4 x 100000 K.W.

BEST AVAILABLE DOCUMENT

Total Cost	2318 Million Rupees.
Foreign Exchange Component	1306 Million Rupees.

The second phase consists of 2 x 100 M.W. Steam Turbines Generating Units.

Capacity of the Unit	2 x 10000 K.Watt.
Foreign Exchange	1037 Million Rupees.

STAGE-V

WAPDA has entered in to a turnkey contract agreement with the consortium of M/s. Siemens of Germany and M/s. CMI of Belgium for the design, supply, installation and commissioning of 2 x 135 MW Gas Turbine and 1x135 MW Steam Power Generating units. The consortium is headed by M/S Siemens . Contract at the cost of DM 286,120,000/ plus Pak Rs.401,067,000/- was awarded on December 20,1989.

The under construction combined Cycle Power Plant Expansion Power Generating Units are anticipated to be commissioned for commercial operation as per following schedule:-

BEST AVAILABLE DOCUMENT

Unit No. I (Gas)	March,1992
Unit No.II (Gas)	May,1992
Unit No.III (Steam)	March,1993
Capacity of the Plant	3 x 135000 K.W.
P.C.I Cost (Total)	Rs. 2.57 Billion
Foreign Exchange Comp.	Rs. 1.6 Billion

BEST AVAILABLE DOCUMENT

SIGNIFICANT TECHNICAL DATA

UNITS I & II

TURBINE

Type of steam turbine	Tendom compound turbine.
High pressure turbine	Curtis wheels + 8 action stages.
Medium pressure turbine	12 action stages.
Low pressure turbine	4 action stages in double flow arrangement(i.e.8 action stages)
Rated out put of the steam turbine.	110 MW
Rated Speed of the steam turbine.	3000 r.p.m.
Rated pressure of the super heated steam before H.P. stop valve.	130 at abs.
Rated temp. of the superheated steam before H.P.stop valve.	535°C.
Rated pressure of the reheated steam before M.P.turbine.	32.5 at abs.
Rated temp. of the reheated steam before M.P.turbine.	535°C.

BEST AVAILABLE DOCUMENT

Rated temp. of the primary cooling water	33°C.
Max. temperature of the primary cooling water.	36°C.
Number of Steam Extractions from turbine.	8
Number of H.P.Turbine regulating valves.	4
Number of M.P.Turbine regulating valves.	2
Number of turbine oil coolers.	5
First Oil filling of turbine.	19400 Liters.
Oil system of Generator	4400 Liters.
Consumption of additional oil.	0.38 Kg/hour.

GENERATOR

Type of turbo-alternator	3-Phase,Hydrogen Cooled.
Rated out put	110 MW,137.5 MVA.
Rated voltage at terminals	10.5 KV +5%,-10%
Frequency speed	3000 r.p.m.
Hydrogen pressure	1000 m.m.w.c. and 2 Kp/cm^2
Hydrogen temp.	40°

BEST AVAILABLE DOCUMENT

Temp. of Secondary Cooling water	33°
Number of Hydrogen Coolers.	3 x 2
Rated out put of Exciter	700 KW.
Exciter speed.	1000 r.p.m.

CONDENSERS

No. of condensers for one unit.	2
Cooling surface of condensers on steam side.	3380 s.q.m.
No.of Primary Cooling Water routes.	2
Resistance of Condenser on Water side.	3 m.w.c.
Cooling water consumption for one condenser.	7700 cu m/hr.
Number of tubes in each condenser.	6800
Length of condenser tubes.	7500 m.m.
STARTING OIL PUMPS	2 NO.
Q	2100 lit/min.
H	125 M.W.C.

BEST AVAILABLE DOCUMENT

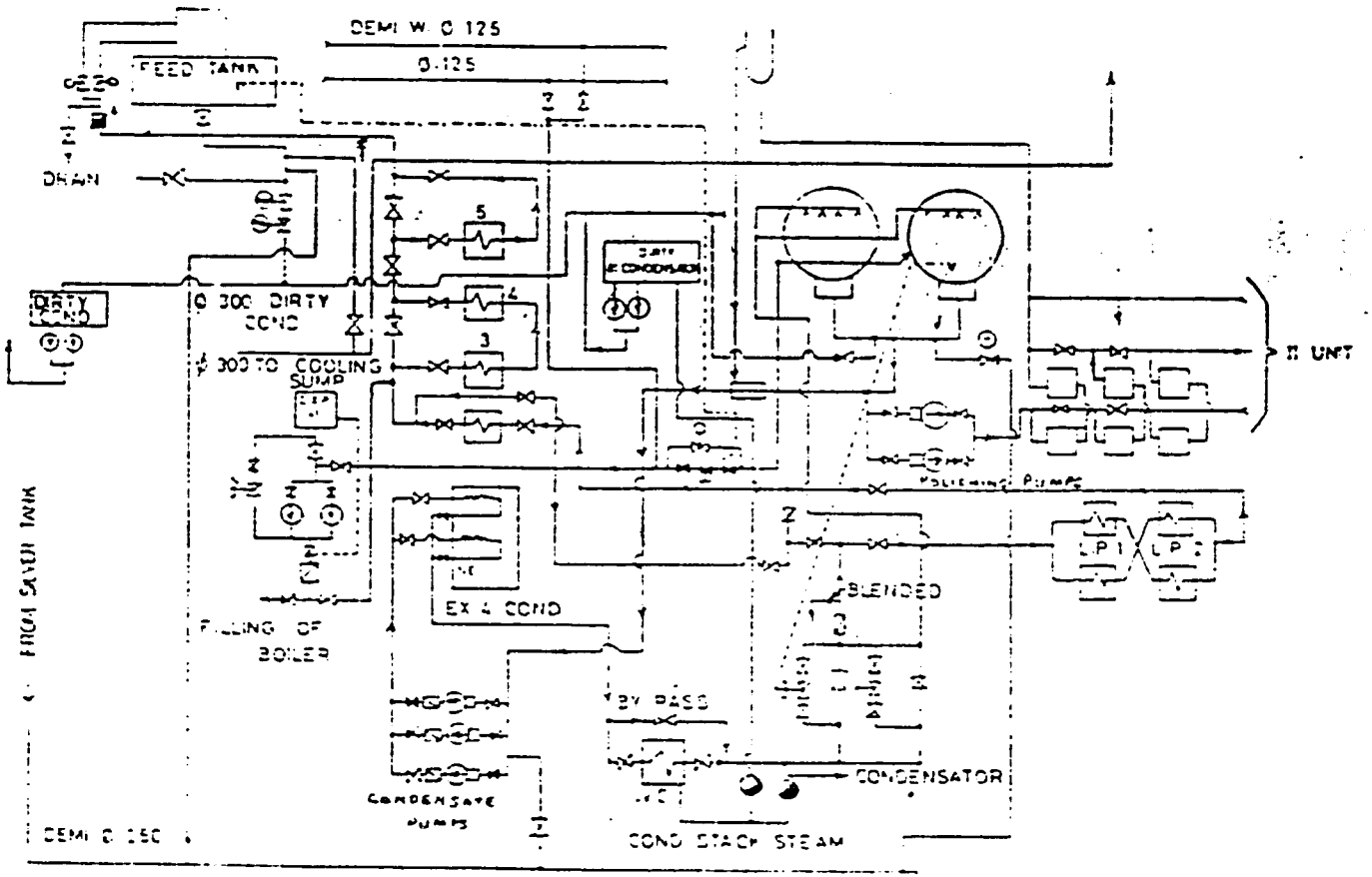

BEST AVAILABLE DOCUMENT

CONDENSATE FLOW

DIAGRAM UNIT NO: 1 & 2

R.P.M.	1475
Electrical Motor	100 KW,400/231 V, 50 C/s.

HIGH PRESSURE OIL PUMP

Driven by 30 KW,1460 r.p.m.,400/231 V,50 c/s.

group electric motor.

BOILER

Max. continuous rating of Boiler	375 tons/hour.
Economical rating of Boiler.	330 t/hr.
Rated out let steam pressure	139 Kp/cm^2
Drum Operating Pressure.	168 Kp/cm^2
Boiler design pressure	177 Kp/cm^2
Rated Steam temp. at super heater outlet.	540^oC+ 5^oC,- 10^oC
Rated feed water temp.	240^oC
Rated quantity of reheated steam	323 tons/hr.
Temp. of steam at the inlet of reheater.	360 ^oC
Rated temp. of the reheated steam at the out let of reheater.	540^oC +5^oC,-10^oC
Steam pressure at the inlet of reheater.	33.5 atg.

BEST AVAILABLE DOCUMENT

Steam pressure at the out let of reheater.	32.5 atg.
Total area of evaporation.	9047 Sq.m.
a- area of Ist stage of evaporation.	7877 Sq.m.
b. area of 2nd stage of evaporation.	1170 Sq.m.
Total surface of superheaters.	26912 Sq.m.
a. Area of Ist Superheater	7022 Sq.m.
b. Area of convection superheater No.2	8060 Sq.m.
c. Area of Superheater No.3	4600 Sq.m.
d. Area of superheater No.4	7230 Sq.m.
Suction Head	21.m
Pump Speed	2910 r.p.m.
Out put of intermediate Extraction	25 t/hr.
Manometric Head of intermediate extraction	40 Kp/cm^2
Bearing lubrication oil pressure	0.5-0.6 Kp/cm^2
Max. bearing temp.	70°C
Type of Hydraulic coupling	RS 630 C
Transmitted out put	1200-2000 KW.
Speed of Electric motor	2980 r.p.m.

BEST AVAILABLE DOCUMENT

Slip of coupling	3-5 %
Range of regulation	2910-2400 r.p.m.
Weight of coupling	2813 Kg.
Cooling area H.C. Cooler	25 Sq.m.
Cooling water consumption at 33 ^{o}C.	60 Cu m/hr.
Lubrication oil water cooler	2.1 Sq.m.
Cooling water consumption	5 Cu m/hr.
Cooling water pressure	2-4 Kp/cm^2
Oil quantity	700 liters including 25 Sq.m. cooler.
Weight of the H.C. Cooler without oil.	1200 Kg.
Weight of the lubrication cooler without oil.	205 Kg.

REDUCING STATION NO.2

Capacity	12-24 tons/hour.
Inlet pressure	8-11 at abs.
Outlet pressure	6 at. abs.
Inlet temp.	340° - 360°C
Out let temp.	150 ^{o}C.

BEST AVAILABLE DOCUMENT

PROPANE BUTANE GAS FOR IGNITION BURNERS ONLY

Pressure of P.B. gas before ignition burner.	0.7 - 1.1 kp/cm^2
INDUCED DRAUGHT FAN	2 Nos.
Type.	C41
Dia meter of the fan	2000 m.m.
Q	102 Cu m/Sac at 150 ^{o} C.
Driven by electric motor	700 KW.
FORCED DRAUGHT FANS	2 Nos.
Type	C43
Diameter of the fan	1800 m.m
Q	60 Cu m/Sac at 50 ^{o}C
Driven by Electric Motor	430 KW.
RECIRCULATION FAN	
Type	DL12 - 2000
Q	50 Cu m/Sec.
Electric Motor	190 KW.
Hydraulic coupling type	750 Sv NL 11
FEED TANK	
Capacity	120 Cu. m.

BEST AVAILABLE DOCUMENT

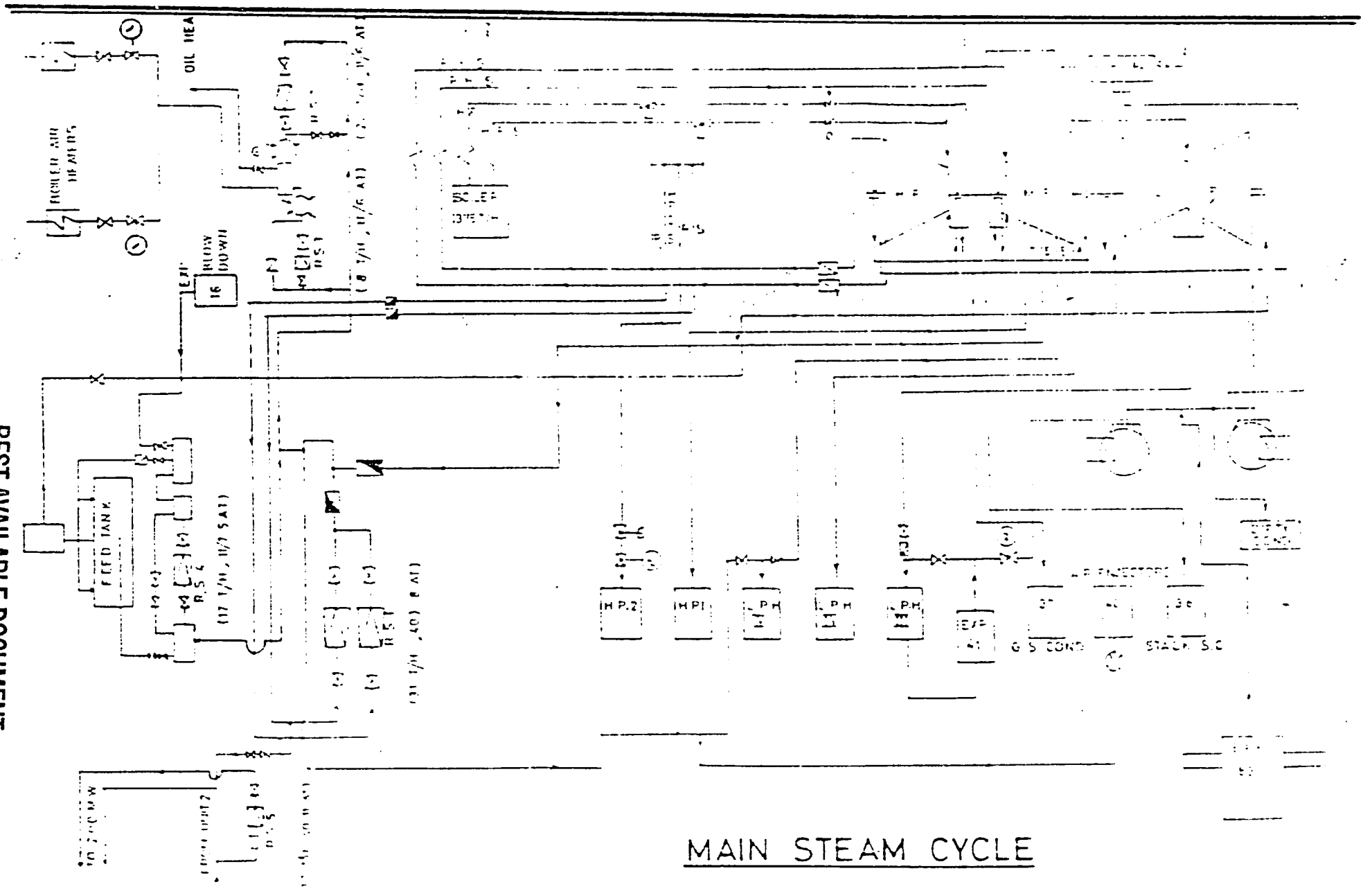

MAIN STEAM CYCLE

UNIT NO: 1 & 2

BEST AVAILABLE DOCUMENT

BEST AVAILABLE DOCUMENT

20

SIGNIFICANT TECHNICAL DATA

UNIT NO. III

GENERATOR

YEAR OF MANUFACTURING	1975
MAKE	ELECTROSILA, USSR
CLASS OF INSULATION	'B'
Full power- KVA.	233500
Active Power-KW	210000
Voltage- V	17750
Stator Current- A.	8550
Power Factor	0.9
Efficiency %	98.6
Static over loading	1.5
Stator winding phase interconnection	Double Star.
Number of Stator winding out-going leads.	9
Frequency Hz	50
Speed- rpm	3000
Fly wheel moment tm^2	21.1
Critical Speeds rpm	1370/3400
Hydrogen Pressure.	3.5 Kgf/cm^2

BEST AVAILABLE DOCUMENT

Rated Temp: of cold gas $0^{o}C$.	+ 50
Rated Gauge Pressure of distillate in the stator winding.	3.0 Kgf/cm

TEMPERATURE TOLERANCES (MAXIMUM)

Stator windings	$105^{o}C$ Measured by R.T.D.
Rotor winding	$115^{o}C$
Stator active iron	105
Hot distillate at stator windings out let.	$85^{o}C$ Measured by mercury thermometer.
Hot gas in Generator	75° C

TURBINE

Type of Turbine	K-200-130-3 Single shaft-three Cylinders
Rated output	210 MW
Superheated steam absolute pressure before H.P.	130 Kgf/cm^2
Superheated steam temperature before H.P.	$540^{o}C$

BEST AVAILABLE DOCUMENT

Absolute steam pressure at H.P.C.Exhaust at rated output	29.3 kgf/cm^2
Steam Temperature at H.P.C. Exhaust at rated output	339°C
Absolute steam Pressure after reheater & before M.P.	25.6 kgf/cm^2
Steam temperature after reheater & before M.P.	450°C
Absolute pressure in Turbine Condenser at rated output	0.078 kh/cm^2
Cooling Water Temperature	27°C
Q	27500m^3/h
Maximum Steam Flow	670 t/h
Turbine rotor speed	3000 r.p.m.

BOILER

Boiler plant TIM -104 is designed for producing steam of high pressure in burning natural gas and oil and operating in block with turbine K-200-130.

Nominal rating, t/h	670
Working pressure in drum ,ata	155
Working pressure of primary steam at boiler outlet,ata	140
Temperature of superheated primary steam,°C	545

BEST AVAILABLE DOCUMENT

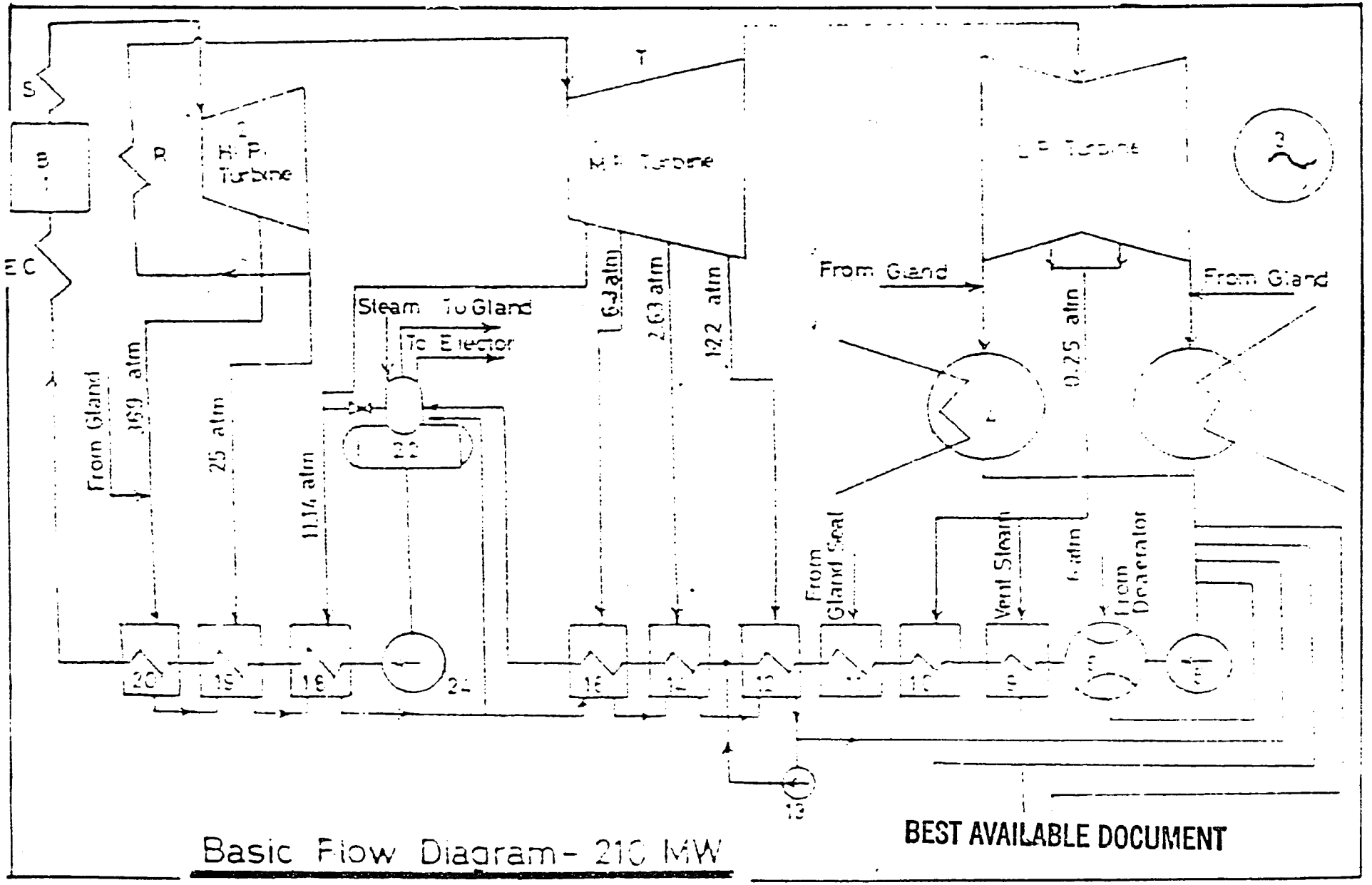

Basic Flow Diagram - 210 MW

BEST AVAILABLE DOCUMENT

BEST AVAILABLE DOCUMENT

Consumption of secondary steam, t/h	590
Pressure of secondary steam at boiler outlet, ata	25,0
Pressure of secondary steam at boiler inlet , ata	27,0
Temperature of secondary steam at inlet, ^{o}C	333
Temperature of secondary steam at outlet, ^{o}C	545
Feed water temperature, ^{o}C	243

BEST AVAILABLE COPY

SIGNIFICANT TECHNICAL DATA

UNIT NO. IV

TURBINE

Model: N210-130-535/535

Manufacturer	Harbin Turbine Works
Rated speed	3000 r.p.m
Rated power	210 MW
Rotary direction of the rotor	Clockwise (viewed from the turbine head).
Live steam pressure	130 ata (before nozzle)
Live steam temperature	535°C
Exhaust steam pressure of H.P.cylinder	25.5 ata
Exhausted steam temperature of H.P. casing	312.5°C
Reheat steam pressure	22.5 ata
Reheat steam temperature	535°C
Exhaust back pressure	0.0729 ata

BEST AVAILABLE COPY

Main oil pump	Centrifugal oil pump with oil entering at two sides driven by the main shaft through pectinated coupler.
Inlet oil pressure:	1 kg/cm^2
Outlet oil pressure	20kg/cm^2
The first oil injector	
Outlet pressure	0.8-1kg/cm^2
Flow	2840.1L/min
The Second Oil Injector Out let pressure	2.8kg/cm^2
Flow	2700L/min

THERMAL CHARACTERISTICS OF TURBINE

There are 32 stages for the flux part of the turbine, that are , single speed governing stage and 11 pressure stages in the H.P. cylinder, ten pressure stages in the I.P. cylinder and five pressure stages at each symmetrical sides in the L.P.cylinder.The height of the last stage blade is 710 mm.

The turbine has eight non-governing extract stages which are applied to heat the feed water, condensate and the deaerator.

BEST AVAILABLE COPY

BOILER

Type	DG 680/140-10
Manufacturer	Dongfang Boiler Works, China
Date of manufacture	1984
Installation date	1985
Rating	680 T/H
Drum pressure	157 kg/cm^2
Superheat steam pressure	140 kg/cm^2
Superheat steam temperature	540°C
Reheat steam flow	589 T/H
Reheat steam temperature	540°C
Reheat steam inlet temperature	315°C
Reheat steam inlet pressure	26.2 Kg/cm^2
Reheat steam outlet pressure	24.2 kg/cm^2
Exit flue gas temperature	133°C
Feed water temperature	250°
Hot air temperature	243°C

BEST AVAILABLE COPY

Air temperature at preheater inlet	60°C
Fuel consumption (gas)	63239 Nm^3/H
Efficiency	93.17%
Furnace outlet temperature	1312°C

GENERATOR

Type	QN-210-2
Active power	210 MW
Rated capacity	247 MVA
Rated voltage	15750 V
Rated current	9056A
Power factor	0.85
Phase	3
Frequency	50 Hz
Rated hydrogen pressure	$3kg/cm^2$
Cooling mode	water-hydrogen-hydrogen

MAIN EXCITOR

Type	JL-1165-4
Rated capacity	1650kva
Rated voltage	431/249v

BEST AVAILABLE COPY

Rated current	1562A
Frequency	100 Hz
Power factor	0.91
Phase	3

PERMANENT MAGNETIC EXCITOR

Type	TFY-46-500
Rated capacity	46 KVA
Rated voltage	161/93 V
Rated current	165 A
Phase	3

AUXILIARY EQUIPMENTS

CONDENSER

Type	N-13490

The condenser has double shells, circulation water system has double flow channels. Each of the shells can be free from operation for cleaning. The two shells are connected with a flexible joint which area is 7.7 m^2 and the steam communication pipe makes them as a whole. Inside the condenser, the brass tubes arranged in bundle. The accumulator of the condenser is provided with drips and splashing device so as to deaerate the condensate and collect the heat.

BEST AVAILABLE COPY

CONCRETE DATA OF THE CONDENSER

Total cooling area	13490m^2
Condensed steam rate	436 t/h
Inlet temperature of the cooling water	27°C
Pressure in the condenser	0.0729 ata
Working temperature	158°C
Water tank capacity	140 m^3
Output	700 t/h

THE FEED WATER PUMP GROUP

BOOSTER PUMP	3 Nos.
Model	YNKN300/200 (single blade with double extracting).
Flow	330 t/h
Lift inlet	77 in H2 O
outlet	121 mH2 O
Speed	1485 r.p.m.
Water temperature	161°C
Shaft Power	56.4 kw
FEED WATER PUMP	3 Nos.
Model	40CHTA
Flow	325 t/h

BEST AVAILABLE COPY

Inlet pressure	11.6 kg/cm^2
Outlet pressure	172.5 kg/cm^2
Speed	4950 r.p.m.
Feed water temperature	161/165.6^oC
Shaft power	2041 kw
Tap pressure	68 kg/cm^2
Minimum flow	92.5 t/h
Stages	6

MOTOR

Model	Y800-11-4
Rated voltage	6600V
Rated power	3200 kw
Rated current	329A
Rated speed	1485 r.p.m.
Phase	3
Pole	4

The cooler is installed at the top of the motor.

CIRCULATING WATER PUMP

Bank side pump

Model	50ZIQ-50
Flow	1746m^3/h

BEST AVAILABLE COPY

Outlet pressure	14.3mH2O
Speed	485 r.p.m.(when the blade wheel is -2°)
Shaft Power	775 KW
Motor	
Model	JSL-1000-12
Power	1000kw
Voltage	6600V
Current	118A
C.W.PUMP	
Model	50ZLQ-54
Flow	20800 m^3/h
Outlet pressure	22.5m H2O
Speed	584 r.p.m. (When the blade wheel is -2°)
Shaft power	1570 KW
Motor power	1600 KW
Voltage	6600V
The Condensate Pump	
Model	7LDTN-6-1000
Intake bore/out take bore	350/250 mm
Lift	162mH2O

BEST AVAILABLE COPY

Flow	$350m^3/h$
Motor	
Model	YL-355-4
Power	225 KW
Revolution	1460 r.p.m.
Frequency	50Hz
Voltage	6000V
Closed Circuit C.W.Pump	
Pump	
Model	20 SH-13
Flow	$2016\ m^3/h$
Head	35.1 M H2 O
MOTOR	
Model	JS-148
Speed	990 r.p.m.
Voltage	6600 V
Frequency	50 HZ
Current	34 A.

BEST AVAILABLE COPY

600 MW COMBINED CYCLE

SALIENT FEATURES OF GAS TURBINES

Gas Turbine is modern speed tronic type and has the remote starting, synchronizing and loading in addition to local auto starting.

The excitation system is purely static and modules (IC) are used.

All the necessary parameters (temperature, pressure, vibration) of the compressor, turbine and generator are monitored by the Micro processor computer and displayed on the screen named as ITS (Integrated Temp. System).

Each gas turbine has its own log printer, the parameter of the unit can be printed. The conditions half hour before tripping can be printed.

The air filter unit of compressor comprises of 1280 elements , with the provision of self cleaning, cartridges, has two years life.

The automatic purging of H2 and filling of CO2 in emergency has been provided.

BEST AVAILABLE COPY

COMBINED CYCLE

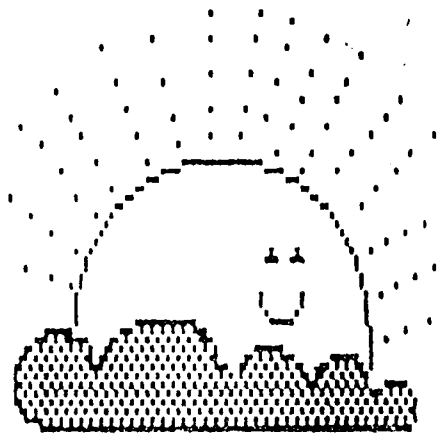

THE NEW ERA

BEST AVAILABLE COPY

35a

* Each unit has provision for diverting its exhaust gases from atmosphere to heat recovery boiler of the steam turbine.
* Automatic fuel change over i.e. gas to distillate.
* Generators have been provided with necessary synchronous condenser operation facility to boost up local voltage system and also decrease it whenever necessary.

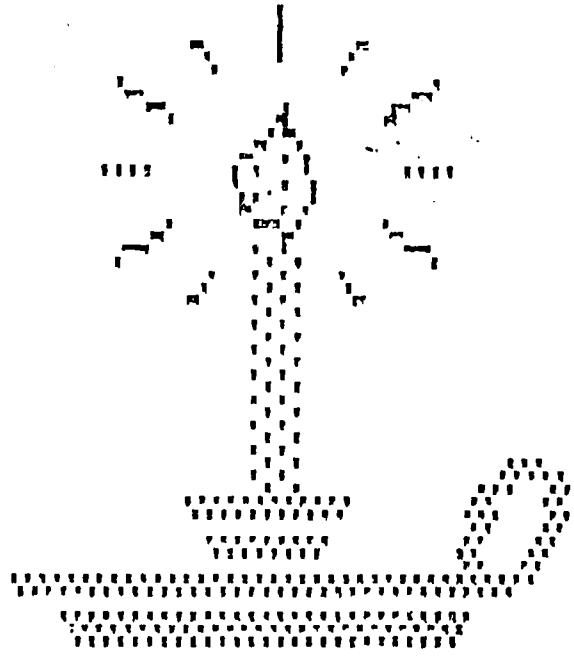

BEST AVAILABLE COPY

GAS TURBINE DESCRIPTION

Gas Turbine Major Components

COMPRESSOR

ROTOR

The compressor rotor is an assembly of -15 individual wheels , two stub shafts each with an integral wheel,speed ring, tie bolts and compressor rotor blades.

STATOR

The stator (casing) of compressor is composed of four major sections.

A- Inlet Casing.

B- Forward compressor Casing.

C- A.F.T. Compressor Casing.

D- Compressor discharge Casing.

These sections in conjunction with turbine shall forms a primary structure of gas turbine . They support the rotor at the bearing points and constitute the outer wall of gas path annuals. Inlet casing, supports bearing No.1 and variable inlet guide vanes. Forward

BEST AVAILABLE COPY

casing contains four compressor stator stages.

The AFT Compressor casing contains fifth to tenth stages while discharge casing contains final seven compressor stages. It also joins, the compressor and turbine stators and provide support for bearing No.2

COMBUSTION SYSTEM

The combustion system is of Reverse flow type with fourteen combustion chambers arranged around the periphery of compressor discharge casing. The system also includes fuel nozzles , Two spark plugs, Two flame detectors and cross fire tubes.

TURBINE SECTION

Energy in the form of high temperature pressurized gas is converted into mechanical work through three stage turbine having parts; rotor, casing, exhaust frame, exhaust diffuser,nozzles and shrouds.

GENERATOR DESCRIPTION

Generator package consists of the generator, hydrogen control equipment CO2 control equipment and the collector ring compartment.

BEST AVAILABLE COPY

The generator is designed to operate continuously and provisions are made for maintaining the hydrogen pressure and purity and for supply cooling water and lubricating oil, circulation of hydrogen is provided by the rotor fans.

GENERATOR PROTECTION & CONTROL

Differential Protections

Generator only.

Generator and transformer

Stator Earth fault, Negative sequence, Over excitation, Field ground, Reverse power (for turbine). Automatic /Manual synchronizing arrangements are provided.

EXCITATION SYSTEM

It is generally known as potential source excitation system . This system controls AC terminal voltage, or reactive volt-amperes of the generator, by controlling its field excitation system, uses a power Potential Transformer (PPT) connected to the generator line terminals as a Power source for the excitation. The PPT secondary voltage is rectified and controlled by diodes and thyristors (SCR's) to furnish DC for the

BEST AVAILABLE COPY

generator field, Since the generator is self excited, that is, field power is obtained from the generator, the excitation system is self contained in that no external power is required, other than DC control power. However , the regulator power supplies are energized by the 120 VAC station supply until the unit is at rated speed.

TRANSFORMER

Unit Transformer - 125 MVA - forced air cooled type with off load tap changer. It steps up the generated voltage from 11.5 KV to 220 KV.

Reserve station supply transformers 20 MVA (2 Nos.) one of them steps down 220 KV /6.6 KV the other 132 KV/6.6 KV. These are forced air cooled and with ON-Load automatic tap changer from M/s MR West Germany, while the transformers are of M/s FUJI - Electric Japan.

220 KV SWITCHYARD

For Gas Turbine No. 1 & 2 and Reserve Station Supply Transformer 220/6.6 KV, Air blast circuit breakers are utilized from Phase-II existing 220 KV Switchyard.

BEST AVAILABLE COPY

Gas Turbine 3 & 4 - three 220 KV lines namely Guddu - New Multan, Guddu-Dadu and Guddu-Sibi are connected to the newly constructed 220 K.V. Switchyard.

A double bus bar system is provided for export of generated energy to the Load Centre.

Sulpher Hexaflouride (SF6) Breakers are installed for switching.

AUXILIARIES

A.C.SYSTEM

There are two reserve station supply transformers, 20 MVA each, one transformer for two units . Two 6.6 KV motors , one for cranking the turbine and the other is for synchronous condenser operation of the unit.

D.C. SYSTEM

There are three separate D.C. Systems, one for Gas Turbine,second for 6.6 KV Sub Station and the third for 220 K.V. Switchyard with their chargers.

CONTROL AND PROTECTION SYSTEM

The installed General Electric Gas Turbines have been

BEST AVAILABLE COPY

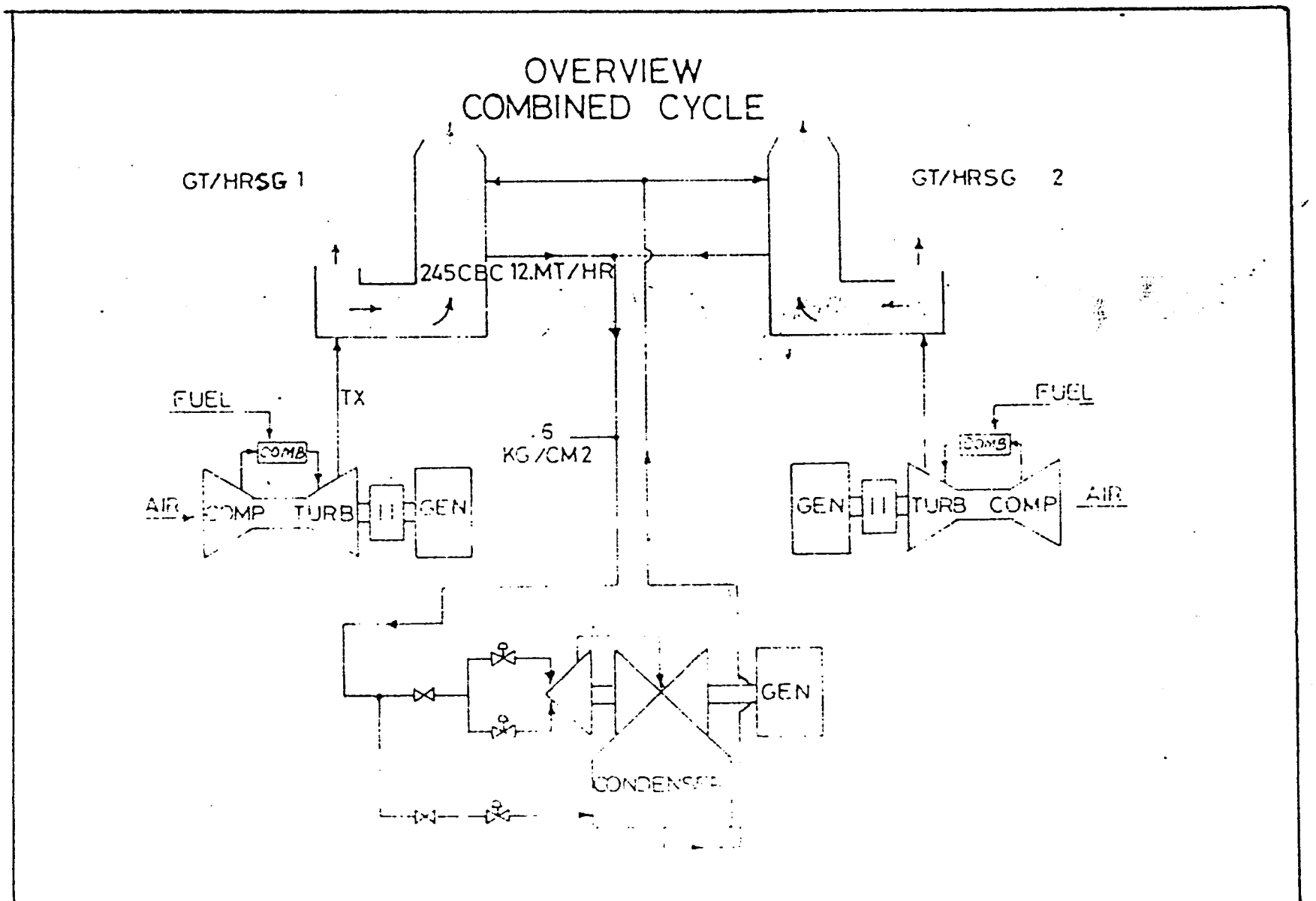

BEST AVAILABLE COPY

equipped with "Speed-Tronic Mark-II" with Integrated Temperature System, so it consists of two portions:

SPEED TRONIC MARK-II SYSTEM

Speed tronic is the registered trade name of General Electric Electronics control for gas turbines. The Speed Tronic Mark-II used more integrated circuits and replaced much of the relays with digital logic. The gas turbine is controlled by changing the amount of fuel sent to the combustion chambers. In speed tronic system a variable control voltage (VCE) represents the 'Set point' or 'Called for amount' of fuel. The fuel metering element, Gas or liquid , is moved to the 'Called for position' by high pressure hydraulic pistons actuated by Servo valves controlled by the Speed Tronic system. Position sensing devices on the fuel element provide a feed back signal to the control system.

INTEGRATED TEMPERATURE SYSTEM (ITS)

The ITS is a microprocessor based system which integrates most of the temperature dependent functions of the gas turbine. Thermocouples are connected to an

BEST AVAILABLE COPY

Analog input rack (with the exceptions of the over temperature thermocouples). These Thermocouples are scanned periodically, covered to digital numbers, cold junction compensated and stored in the microprocessor memory . Similarly selected high level signals (e.g. VCE, OTA, OTB,OTC) are also connected to the analog input rack, periodically scanned converted to digital numbers and stored in the microprocessor memory. The control and protection functions are all implemented by programme if the programmable read only memory (PROM). This system has following main control sub-systems;

1- Start up control

2- Speed control

3- Temperature control

4- Protection system

5- Sequencing system.

BEST AVAILABLE COPY

STATION BATTERY SINGLE LINE DIAGRAM

600 MW CCP

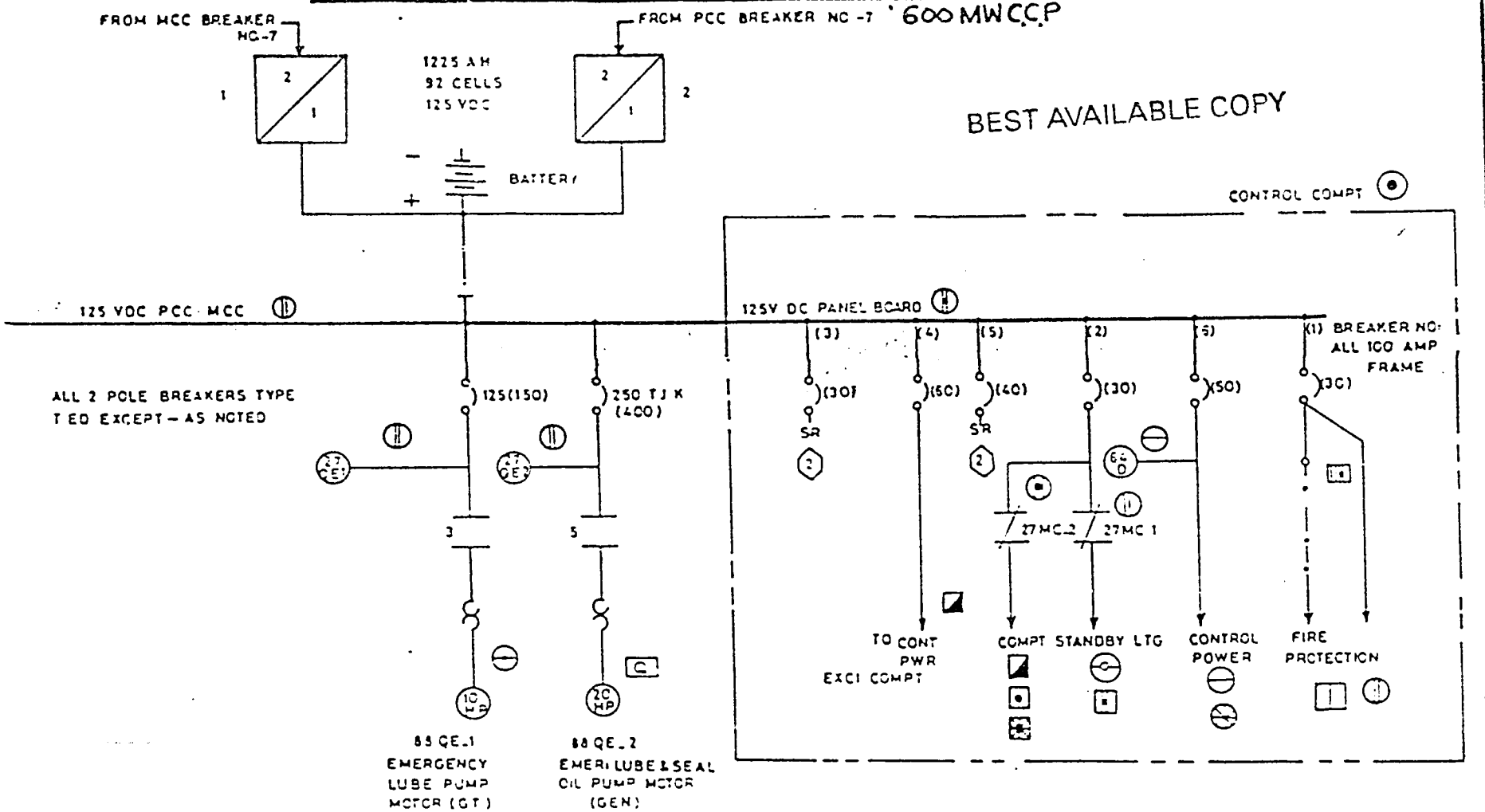

BEST AVAILABLE COPY

44

Rated Amperes	6320,Peak capability 6471A
Substransient reactance	0.162 per unit
Transient reactance	0.227 per unit
Synchronous reactance	1.794 per unit
Poles	2
RPM	3000
Excitation volts	500V
Field current	1103A

240 KV VOLTAGE TRANSFORMER

Manufacturer	Alsthom Atlantique, France.
Type	UHC-245
Rated Voltage	
Primary	220/13KV
Secondary	110 /13KV
Tertiary	110/13KV
Secondary	220 VA
Tertiary	25 VA
Simultaneous Burden	200 VA

240 KV LIGHTENING ARRESTER

Manufacturer	ASEA AB,SWEDEN
Type	XAQ245A3

BEST AVAILABLE COPY

Voltage rating	240 KV
Discharge current rating	10 KA
Type of operating counter	TXB

UNIT TRANSFORMER

Manufacturer	Fuji Electric Co.Ltd.
Type	Three Phase,Oil Immersed Outdoor.
Rated output(ONAN/ONAF1/ONAF2)	75/100/125 MVA
Vector group	Ynd 11.
Nominal ratio transformation at no load.	11.5 KV/220 KV
Rated current (H.V)	197/262/328
Rated current (L.V)	3936/5249/6561
Type of cooling	ONAN/ONAF1/ONAF2

RESERVE STATION SUPPLY TRANSFORMER(132/6.6 KV)

Manufacturer	Fuji Electric Co.Ltd.
Voltage Ratio	132 KV/6.6KV
Type	Three Phase,Oil immersed
Rated Power Output (ONAN/ONAF1/ONAF2)	12/16/20 MVA
Current Rating HV	52/70/87 A
Current Rating LV	1050/1400/1750A

BEST AVAILABLE COPY

Power Freq Test Voltage(K.V)	275 for AV 20 for LV
Insulation class	F
Type of cooling	ONAN/ONAF1

220 KV SWITCHGEAR EQUIPMENT

240 KV CIRCUIT BREAKER

Manufacturer	Sprecher and Schuh (Switzerland)
Type designation	HFG 114/1A
Rated voltage	245 KV
Rated continuous current	2000 A
Rated continuous current	40 KA
Type of operating Mechanism	FKF1.2 motor wound spring

240 KV ISOLATORS AND EARTHING SWITCH

Manufacturer	EGIC/MG.
Type	DR 245
Rated Voltage	245 KV
Rated normal current	2000 A

240 KV CURRENT TRANSFORMER

Manufacturer	Alsthom Atlantique, France
Rated primary current	2000A

BEST AVAILABLE COPY

Number of cores	5
Current	2000/1 1500/1 1000/1 750/1 500/1
Rated burden	
For metering service	30 VA
For relaying service	30 VA
Vector group	Ynd 11.
Nominal ratio of transformation at no load.	132/6.6 KV.
Type of cooling	ONAN/ONAF1/ONAF2

RESERVE STATION SERVICE TRANSFORMER (220KV/6.6KV)

Manufacturer	Fuji Electric Co.Ltd.
Standard	IEC
Type	Three phase,oil immersed outdoor.
Rated/Output (ONAN/ONAN1/ONAF2)	12/16/20 MVA
Vector group	Ynd 11
Nominal ratio of transformation at no load.	220/6.6 KV
Type of cooling	ONAN/ONAF1/ONAF2

BEST AVAILABLE COPY

A.C.SYSTEM

Starting Motor	1250 HP
Synchronous condensers	900 HP
Auxiliary Hydraulic Pump	20 HP
Auxiliary Lub Pump	100 HP
Exhaust frame blower (2Nos)	100 HP
Water cooling pump motor	150 HP
Exhaust Plenum cooling air fan	05 HP
Generator Lub /Seal Oil Pump (2 Nos.)	75 HP
Fuel forwarding pump (2 Nos.)	40 HP
Cooling water fan motor (3 Nos.)	50 HP
Accessory compartment heater	3 KW
Generator space heater	5 KW
Turbine compartment heater	3 KW
Lub tank immersion heater	24.4 KW
Lub tank immersion heater (Gen.)	25.5 KW
Gen. bearing oil lift pump (2 Nos.)	5 HP
Atomizing air booster	20 HP
Torque adjuster drive motor	1.5 KW

BEST AVAILABLE COPY

Gen. seal fluid pump	75 HP
Compressor motor (CO_2 Fire Protection skid)	0.75 HP
Pressurizing fan access turbine load excitation compartment.	125/37.25
Vapour extractor motor	1 HP
D.C.SYSTEM	
Emergency Lub Pump Motor (Turbine)	10 HP
Emergency Lub/Seal Oil Pump Motor (Gen.)	20 HP
Gas Turbine Battery	
Rating	1225 AH, 7 hour
Voltage	125 Volt.
Battery Charger	
Capacity	6.25 KW
Input voltage	400 VAC, 1 Phase Hz
Input current	76 A
Output voltage	153.9 VDC
Output current	100 Amps.

BEST AVAILABLE COPY

SALIENT FEATURES OF STEAM UNITS

600 MW C. C. P.

Four Gas Turbine of 100 MW each were put in operation in 1985-86, these units are utilizing the fuel in the form of either Mari Gas, Kandhkot Gas, Sui Gas or HSD Oil. A high temperature exhaust of these Gas Turbine was wasted in atmosphere which is now utilized by the two Combined Cycle Generating Units.

General Electric Company of U.S.A. has supplied the two STAG 209E Combined Cycle phase-II Power Plants, each of 100.56 MW capacity. The major items of this Plant include:

Heat Recovery Steam Generators : 04 Nos.

Steam Turbo Generators : 02 Nos.

Plant support systems for circulating cooling water, water treatment , condensate, steam, air and fuel. Electrical Power Systems for Feeding Plant auxiliaries. The Plant design is based on the General Electric MS-9001 Gas Turbine Generators, with matching heat recovery steam generators and steam turbine generator. Each STAG 209E Plant can be rapidly brought on line.

BEST AVAILABLE COPY

The Gas Turbine generators can provide upto 73% of the Plant out put in less than 30 minutes. Depending on the steam equipment temperatures, the rest of the Plant can be on line in one to three hours. For typical daily start applications, the total plant out put would be available in less than one hour.

HEAT RECOVERY STEAM GENERATORS (HRSG)

The HRSG is unfired and functions only when the associated Gas Turbine is operating. Each HRSG operates independently and provides a proportional share of the steam flow for the steam turbine unit. The HRSG steam capacity will be controlled by a modulating damper located in the Gas Turbine By-pass stack. The major components of HRSG are:

HRSG DRUM - ECONOMIZER - EVAPORATOR - SUPER HEATER .

TECHNICAL DATA

HRSG

Manufacturer	General Electric

BEST AVAILABLE COPY

Type	Forced Circulation with economizer evaporator, superheater and exhaust gas by-pass dampers.
Number of Units	Four
Performance with Base Load	
TURBINE	
Inlet Air Temp.	80°F-80.4°F-104°F-122°F
Maximum Steam Flow Lbs	6302-5982 - 5868 -5717
Steam Temp. at Superheater outlet ,PSIG	936 - 942 - 930 -909
Steam press, at Superheater outlet °F	936 - 965 - 977 -991
Feedwater Temp. at Economizer Inlet ,°F	167 - 171 - 172 -172
HRSG Exist Gas Temp. °F	361 - 361 - 360 - 356
HRSG DESIGN	
Outlet Dimensions (Length x width x ht)	67.6 x 16.4 x 69.9 feet
Design Maximum pressure	1166 psi
Approximate Empty Weight	971,303 lbs

BEST AVAILABLE COPY

Super Heater	
a. Total Heating Surface	61,215 ft^2
b. Tube Material	SA-209-TI/SA-213-T22
c. Tube Diameter	1.25 in.
d. Fin Material	SA-240-Type 409
Evaporator	
a. Total Heating Surface	144.216 ft^2
b. Tube Material	SA-192
c. Tube Diameter	1.25 in.
d. Fin Material	SA-283-C
Economizer	
a. Total Heating Surface	112,355 ft^2
b. Tube Material	SA-192
c. Tube Diameter	1.0 in
d. Fin Material	SA-283-C
HRSG Circulating Pump	
Manufacturer	Worthington
Type	Horizontal, Radially Split, Single-stage,Centrifugal
Number of Units	One per Boiler
Rated Capacity	4403 gpm
Total Pump Head	92 ft

BEST AVAILABLE COPY

Pump Speed	980 rpm
Design Brake Horsepower	110 hp
Cooling Water Flow rate	3.5 gpm
Motor Manufacturer	Loher
Motor hp/V/Hz/Phases	177 hp/380V/50Hz/3-Ph

STEAM TURBINE

The STAG 209E steam turbine is a straight condensing, double flow, non-reheat, tendom compound, with downward exhaust having 23" last stage buckets designed to utilize all steam generated at any ambient temperature in the Plant operating range at variable steam temperature and pressures.

Recognizing the unique ability of STAG Plants to be started and stopped easily and quickly,the steam turbine for the STAG 209 incorporates special design features for suitability to cycle duty without compromising base load capabilities.

STEAM TURBINE DESIGN FEATURES

TURBINE TYPE:	Straight Condensing- Double Flow.

BEST AVAILABLE COPY

Driving Performance	118,306 KVA,11,500 V,Hydrogen Cooled Generator,500 V Static Exciter.
Rating	95,700 Kw
Design steam conditions	
Initial pressure	850 PSIG
Initial temperature	949.5 FFT
Back pressure	2.5 inches Hg Abs.
Speed	
Rated	3000 rpm
Primary trip	3360 rpm
Emergency trip	3420 rpm

TURNING GEAR

It is motor operated with provisions for automatic engaging and manual cranking including:

Cranking device

Low speed sensing device

Solenoid for local or remote engagement.

Push button for solenoid engagement signal lights

Bearing pressure inter lock.

BEST AVAILABLE COPY

GENERATOR

The Generator is completely enclosed hydrogen cooled, synchronous unit, lubrication for the generator is supplied from the turbine lubrication system. Generator cooling system including hydrogen coolers which are vertically mounted in the cooler towers located at the four corners of the frame.

NOMINAL RATINGS

KVA	118,306
Armature Amps.	5,939
Field Amps	11,500
Exciter Volts	942
Exciter Volts	500
Power Factor	0.85

DESIGN DATA

Gas 98% Purity (PSIG)	30
Maximum KVA One Cooler Out of Service	94,645
No. Load Field Current	348 A
Three Phase Armature Winding Capacitance	0.947 uf

BEST AVAILABLE COPY

Armature Winding DC Resistance(per phase)	0.00258 Ω at 100°C
Field Winding DC Resistance	0.555 Ω at 125°C

EXCITATION SYSTEM

The excitation system used on each turbine generator is the current state of the art in A.C. Generator excitation system. This system controls A.C. terminal voltage or reactive volt-amperes of the generators, by controlling its filed excitation system uses a Power Potential Transformer (PPT) connected to the generator line terminals as a power source for the excitation. The PPT secondary voltages rectified and controlled by diodes and thyristors (SCR's) to furnish D.C. for the generator field. Since the generator is self excited, i.e.field power is obtained from the generator, the excitation system is self contained in that no external power is required, other than D.C. Control Power.However, the regulator power supplies are energized by the 120 V.A.C.station supply until the unit is at rated speed.

BEST AVAILABLE COPY

TRANSFORMER

MAIN STEP-UP TRANSFORMER

DESCRIPTION	Step up transformer that steps the steam turbines generator voltage of 11 KV upto the utility voltage of 220 kv.
Manufacturer	Fuji Electric Co.
Installation	Outdoors
Ambient Temperature	$0^{o}C$ to $50^{o}C$, $40^{o}C$ Average
Coolant	Oil ($10^{o}C$)
Oil Preservation System	Conservator
Cooling Class	OA/FA/FOA
No.of Windings	Two(2)
Frequency	50 Hz
MVA Rating	73.2/97.6/122 MVA @ $40^{o}C$ average ambient
Temperature Rise	$55^{o}C$ winding Rise by Resistance above $40^{o}C$ average daily temperature with $50^{o}C$ maximum ambient temperature and $65^{o}C$ hottest spot rise.
High Voltage Winding	
Rated Voltage	220 KV

BEST AVAILABLE COPY

Connection	Solidly grounded wye
BIL	1050 KV
Low Voltage Winding	
Rated Voltage	11 KV
Connection	Delta
BIL	110 KV
Vector Group	YNd 11
Transformer Impedance	10% on FOA base
UNIT AUXILIARY TRANSFORMER	
Description	Auxiliary Step-down transformer that steps the generated voltage of 11 KV down to 6.6.KV which supplies the auxiliary of the steam turbine.
Manufacturer	Fuji Electric Co. JAPAN
Installation	Outdoors
Coolant	Oil(10°C)
Oil Preservation System	Conservator
Cooling Class	OA/FA
No.Windings	Two(2)
Material	Copper
No.Phases	Three(3)

BEST AVAILABLE COPY

Frequency	50 Hz
MVA Rating	10/12.5 MVA @ 40°C average ambient
Temperature Rise	55°C Winding Rise by Resistance above 40°C average daily temp. with 50°C maximum ambient temp. and 65°C hottest spot rise.

High Voltage Winding

Rate Voltage	11 KV
Connection	Delta
BIL	110 KV
Vector Group	Dynl
Transformer Impedance	5.75% on OA base

High voltage air-filled terminal box for isolated phase bus connection.

Low voltage air-filled terminal box and connectors for terminating 15 KV shielded cable.

CONDENSER COOLING WATER SYSTEM

Normally the condenser cooling water is river water

BEST AVAILABLE COPY

from the Irrigation Canal named B.S.Feeder. The raw water from this Canal is circulated by two circulating pumps (the third one is standby), in the condenser tubes, to condense steam.

A cooling tower and cooling pump house is also provided as a secondary circulating water supply for plant operation when the canal can not supply circulating water. The cooling tower is of the mechanical induced draft type.

BEST AVAILABLE COPY

405 MW COMBINED CYCLE

Expansion Project

Upon instructions of Federal Government , WAPDA planned to install 3 more Units 2 x 100 MW Gas Turbines and one 100 MW Steam Combined Cycle Unit as an expansion of existing 600 MW (4 x 100 MW Gas Turbines and 2 x 100 MW Steam Combined Cycle) ,to meet the rising power demand of the country and in order to bring lot of direct and local benefits. The Federal Government sanctioned PC-I for a total cost of Rs.2.57 Billion including Rs.1.6 Billion Foreign Exchange . International Tenders were invited and after the evaluation of the bids the offer of M/s. Siemens Germany was found to be the most attractive and economical. According to which 2 x 135 MW Gas Turbines and 1 x 135 MW Steam Turbine has to be installed.

WAPDA therefore entered into a Turn Key Contract with consortium of M/s Siemens of Germany and M/s CMI Belgium for the design, supply , installation and commissioning facilities. The total value of the Contract is DM 286,120,000/- plus Rs.401,067,000/=. The

BEST AVAILABLE COPY

date of award was December 20,1989.

These three machines of total capacity 405 MW are being installed on the north west of the existing Combined Cycle Units & have been separated by the 500 KV Switchyard.

Natural gas is the primary fuel for all the existing steam as well as the running combined cycle units, although the steam unit boilers can be fired on furnace oil and the combined cycle gas turbines can be operated on High Speed Diesel Oil. Natural Gases from Sui, Kandhkot and Mari fields are supplied to Guddu where a gas mixing station is already in use to allocate the gases to various power plant units.

Consequent upon decision of installing 2 x 135 MW Gas Turbines in expansion project, there will be an additional requirement of 90 MMCF gas/day, but unfortunately Ministry of Petroleum has not approved this extra quantity of gas. It has therefore been planned to use Furnace oil in the boilers of the existing steam units 3 & 4 and divert the saved quantity of Gas for operation of newly installed 2 x 135 MW Gas Turbines.

BEST AVAILABLE DOCUMENT

THE SCOPE OF THE PROJECT

405 MW CCP

* Two gas turbine and generator units each rated at 135 MW capacity , complete with auxiliaries and local panels.
* One steam turbine and generator unit of 135 MW capacity, complete with all auxiliaries.
* Two units of heat recovery steam generators (HRSG), complete with auxiliaries.
* Step-up and service transformers, switchgears and associated electric equipment for the transport of electric power from power plant to the electric grid.
* Associated civil works.
* Training to WAPDA personnel.
* Provision of Consultancy services.

BEST AVAILABLE DOCUMENT

405 COMBINED CYCLE PROJECT

PLANT DESCRIPTION

Number of Units		Two
Gas Turbine Generators:		Two (2)
Gas Turbines	:	Heavy Duty Single Shaft
Guaranteed Net Output at Base Load.	:	136,070 KW at 30 °C (Ambient).
Generator	:	
Generator Voltage	:	11,000 V
Frequency	:	50 Hz
Power Factor	:	0.85
Generator Speed	:	3,000 RPM
Steam Turbines Generators	:	one (1)
Steam Turbine		
Combined Cycle Unit Guaranteed Net Output	:	147,218 Kw at 30°C (Ambient)
Speed	:	3000 RPM
Number of stages High pressure/ Low pressure	:	5/26

BEST AVAILABLE DOCUMENT

Generator

Speed	:	3,000 RPM
Phases	:	3
Frequency	:	50 Hz
Voltage Rating	:	15,750 V
Power Factor	:	0.85
Guaranteed output at 0.85 and 43°C cold gas temperature.	:	153,000 Kw
H R S G		Two Nos.
Max. Steam Flow at 30 °C Base	:	65.48 Kg/Sec.
Steam Pr. at 30°C Base.	:	60 Bar
Steam Temp. at 30°C Base	:	530°C
Feedwater Pumps	:	Three (3)
Type	:	Barrel Type Multi-stage (Horizontal)
Capacity	:	98.2 Kg/Sec.
Total Head	:	880 Meters
Motor kw/v/Hz/phases	:	1400/6,600/50/3
Speed	:	2,976 RPM

BEST AVAILABLE DOCUMENT

Condensate Feedwater Pumps Three Nos.

Type	:	Can Type (vertical)
Capacity	:	98.2 Kg/Sec.
Total Head	:	116/90 Meters
Motor kw/v/Hz/Phases	:	132/400/50/3
Speed	:	1,480 RPM

Main C.W. Pumps

Design Flow	:	16,776 cu. meter/hour
Design Head	:	13 meters
Maximum Speed	:	490 RPM
Cooling Tower	:	
Number of Cells	:	14
Design Water Flow	:	34,848 cu meter/hour
Inlet Water Temp.	:	45°C
Outlet Water Temp.	:	37°C
Heat Removed	:	259.2 x 10^6 kcal/hour

Water Treatment Plant

Demineralized water

Flow Rate	:	666 liters per minute
Type	:	Anion, Cation, and Mixed Bed Exchanger.
Energy Generation	:	415,342 kw

BEST AVAILABLE DOCUMENT

Max/Min Load Capability	:	From 0 to 100% load.
Plant Heat Rate		
on Combined Cycle	:	7,335 kj/kW-Hr
Number of Normal and Fast Starts	:	Normal,300 starts per 5,000 fired hours, and Fast, 600 starts per 5,000 fired hours.
Fuel consumption at 30 ^{0}C	:	Fuel Gas = 28 Kg/Sec Fuel Oil = 19.0 Kg/Sec.
Plant Load Factor	:	70%

BEST AVAILABLE DOCUMENT

CHEMICAL SECTION

The Chemical water treatment is of vital importance in a steam power plant. The untreated water which contains silica and other mineral contaminations becomes very harmful to the metallic surfaces of boiler and turbine when heated up to high pressure and temperatures. Thence a chemical section with skilled chemists and modern equipment has been established.

WATER TREATMENT PLANT UNITS I & II

Clarifying Reactor dia 4200 mm	2 Nos.
Rated capacity	63 Cu.m/hour(each)
Minimum capacity	26 Cu.m/hour (each)
Maximum capacity	70 Cu.m/hour
Pressure Filter	
Dia 3000mm	
Operating over pressure of	6 Kp/Sq.Cm
Filling under laying bed quartz sand D 2/4 , 2.5 Cu.m	
Filtering Filling quartz sand	VP-2 11.7 Cu.m
Air Receiver	
Dia 2000 mm	

BEST AVAILABLE DOCUMENT

Volume	10 Cu.m
Operating over pressure	6 Kp/Sq.Cm.
Operating Temperature	40°C

Ferric Chloride Dissolving Tank.

Dia 1600 mm
Volume 2 Cu.m for 20% $FeCl_3$

Measuring vat of dia	1000 mm with working
Volume of	0.6 Cu.m for 10% $FeCl_3$
Operating temperature	45°C

Rotary lime slaking apparatus

dia 800 mm

Maximum daily capacity of	4.5 tons.
Stirrer of dia	1400 with working
Volume of 1.5 Cu. m for	20% CaO
Hydrocyclone of 6 Cu.m/hour for	20% CaO
Storage Tank dia	2800 mm with working
Volume	25785 Lit. for 20% CaO
Stirrer of dia	1400 mm with working
Volume of	1.5 Cu.m for 3% CaO

BEST AVAILABLE DOCUMENT

HYDROGEN PRODUCTION PLANT UNITS I & II

BAMAG ELECTROLYSER

Maximum Volt	76 V
Maximum Amp.	560 A
H2 gas outlet pressure mm W.C.	200
O2 gas outlet pressure mm W.C.	200
H2 gas purity	99.9 $\pm$ 0.1% Vol.
O2 gas purity	99.5 $\pm$ 0.3% Vol.
H2 gas Max. capacity	$9m^3$/hour
Feed Water rate	0.9-1.0 litre per
Compressors	2 Nos.
Ist stage pressure	5.7 Kp/cm^2
2nd Stage pressure	39.0 Kp/cm^2
3rd Stage pressure	175.0 Kp/cm^2
Maximum rate	14 litre/minute

DEMINERALIZATION PLANT UNITS I & II

Weak Cation Exchanger

Number of filters	2 Nos.
Charge material	CC-3
Functional group	R-COOH

BEST AVAILABLE DOCUMENT

Bed depth	1470 mm
Water treated	5000 m^3
Flow rate	20-45 m^3/hr.
Strong Cation Exchanger	
Number of filters	2 Nos.
Charge material	C-20
Functional group	-SO3-H
Bed depth	1270 mm
Water treated	1406 m^3
Flow rate	20-45 m^3/hr.
Weak Anion Exchanger	
Number of Filters	2 Nos.
Charge material	A-30-B
Functional group	- NR2
Bed depth	1270 mm
Water treated	1406 m^3/hr.
Flow rate	20-45 m^3/hr.
Strong Anion Exchanger	
No. of Filters	2 Nos.
Charge material	A-101-D
Functional group	-NR3

BEST AVAILABLE DOCUMENT

Bed depth	1270 mm
Water treated	2343 m^3
Flow rate	20-45 m^3/hr.
Strong Anion Exchanger	
No. of filters	2 Nos.
Charge material	A-101-D
Functional group	- NR3
Bed depth.	1260 mm
Water treated	75000m^3
Flow rate	20-45 m^3/hr.
MIXED BED	
No of Filters.	2 Nos.
Charge material	C-20,A-101-D
Functional group	SO3,-H,NR3
Bed Depth	360 mm,720
Water treated	12000 m^3
Flow rate	20-45 m^3/hr.
SOFTENER	
No of filters	2 Nos.
Charge Material	C-20
Functional group	SO3-Na

BEST AVAILABLE DOCUMENT

Bed depth	1380 mm
Water treated	360 m^3
Flow rate	3.5 - 14 m^3/hr.

WATER TREATMENT PLANT UNITS III & IV

The water treatment plant incorporates the following principal equipment.

Two Nos. Clarifiers.	180m^3/hr Capacity each.

One No. Clarifier is as stand-by, operation.

Max. pressure	6.0 Kg/cm^2

Four double Chamber filters(three operational filters and one for hydraulic overloading).

Diameter	3400 mm Loaded with anthracite.
Bed Height.	0.9m in each chamber
Max. pressure	6.0 Kg/cm^2

Four H-Cationic filters

(Two sets of H-cationic filter)

Diameter	2600 mm loaded with C-20 to the height 2.0m and C-433 in the preceding filter to 1.5m.
Height accordingly :max.pressure	6.0 Kg/cm^2

BEST AVAILABLE DOCUMENT

:max.flow rate	$80.0 m^3/hrs$

Two First stage Anion filters

Diameter	26mm filled with A-30-B doulite resin. to the height 0.8 m.
Inlet max. pressure	$6.0 Kg/cm^2$
max. flow rate	$80.0 m^3/hr$

Decarboniser

The charged material is Reaching Rings output.	$150 m^3/hrs$.

H-Cationic filter IInd stage 3 Nos.

The three filter charged with	C-20 resins
Diameter	2600 mm load with C-20 to the height 0.8m

Three second stage Anionite filters

Diameter	2600 mm filled with A-101-B doulite resin to the height of 0.81 meter.

One No.H-Cationite filter third stage

Diameter	2600mm filled with C-20 doulite resin

BEST AVAILABLE DOCUMENT

One third stage Anionite filter

Diameter	2600 mm filled with A-101-B Boulite resin to the height 0.8m.

The tanks associated with the water conditioning plant are as follows.

Coagulated and lime water tank	$200m^3$x2
Blow down tank for clarifier	$30m^3$x1
Decarbonized water tank	$100m^3$
Settling tank for back washing water from mechanical filter	2 x 100
Two Nos demi water tanks	$400m^3$x1
Tank of auxiliary clarified tank	$400m^3$x1
Tank of Aux. Demi water tank	100^3x1
Tank for repeated use of Sodium hydroxide	$50m^3$
Clarified water storage tank one No.	$5000m^3$

DEMI WATER PRODUCTION

Demi water production/hr.	$80m^3$/hr
Storage tanks at W.T.Plant	$800m^3$
Contaminated tank	$1000m^3$each

BEST AVAILABLE DOCUMENT

Pure condensate tank	$1000m^3$ each
Total Storage Capacity	$3800m^3$
Chemical Storage Tanks	
Ammonia sol storage tank.	$30m^3$
Caustic Soda solution Storage tank	$30m^3$x2
Sulphuric Acid Storage tank 2 Nos.	$30m^3$x2
Clarified water production	$180m^3$/hr

H2 PLANT UNITS III & IV

Hydrogen plant consists of following principal equipments.

Electrolyser	2 Nos.
Maximum ampere required	72 Volts.
Maximum ampere required	330 Amp
Max. production of each electrolyser	4.3 m^3/hr
Maximum pressure of electrolyser	10.0 Kg/cm^2
Maximum operating temperature	80^oC
RECTIFIERS	2 Nos.
Input Max. volts	220 V
Max. Amp.	330 Amp.
Output max.volts	72 V
max. Amp.	330 Amp

BEST AVAILABLE DOCUMEN

DRYERS 2 Nos.

Dryers are charged with Silica gel which are regenerated with steam.

RECEIVERS

Each set consists of two Nos. receivers Filled at maximum pressure	10 Kg/cm^2
Each receiver capacity	10.0 m^3
Safety valve setting	11.5 Kg/cm^2
Diameter	1516 mm
Carbon Dioxide receivers	2 Nos.
Capacity	10m^3 each
Total capacity	20 m^3
Safety valve setting	11 Kp/cm^2
Design pressure	13.0 Kg/cm^2

WATER TREATMENT PLANT AT 600 MW C. C. P

Raw water supplied from the canal is pumped to a water pre-treatment ,where it is clarified, filtered and stored in two filtered water storage tanks. Three filtered water transfer pumps take suction from the filtered water storage tank and provide water for the makeup demineralizer, the service water system, the

BEST AVAILABLE DOCUMENT

potable water system and the existing water treatment system.

Two treated water transfer pumps are provided to supply filtered water to the filtered water storage tanks from the existing water treatment syst

A dual train, three bed demineralizer will be supplied to provide cycle makeup to the STAG units. Demineralizer water from the outlet of the mixed bed hange units will be stored in the demineralized r storage tank. Two demineralized transfer pumps will be provided to the two STAG unit condensate storage tanks or the existing power plant. The existing demineralizer system can also supply water to the demineralized water storage tank.

The service water system consists of a service water tank, two service water pumps and distribution header.

HYDROGEN GENERATING PLANT AT 600 MW C.C.P

The plant consists of two electrolytic generating sets namely as Cell Bank No. 1 & 2 having gas generating capacity of 11.2 cubic meters per hour each.

BEST AVAILABLE DOCUMENT

CHILLER PLANT

Three units for air conditioning of Central Control Room building and Admn. Block, having provision for heating as well has been supplied by M/s Trane Engineering Co., U.S.A. The single stage absorption could generator is designed to use 12 psig steam or hot water upto 270°F. Working fluids in the machine are lithium bromide, the absorbent , and water the refrigerant. The steam or hot water is used to reclaim refrigerant from the lithium bromide, the absorbent, and water the refrigerant. The steam or hot water is used to reclaim refrigerant from the lithium bromide solution to sustain the refrigeration cycle. Each machine has four internal sections,the concentrator, condenser, evaporator and absorber. Additional components include heat exchanger, electronic control panel , pneumatic control panel, operating valves,solution pump and purge pump.

BEST AVAILABLE DOCUMENT

F U E L

The units I & II use Gas as Fuel , while III and IV are provided- with dual fuel firing arrangements. The four gas turbines run on Natural Gas/ H.S.D. oil.

All the three gases are intermixed with each other and then supplied to the various Generating units. The following is the allocation of Gas for Thermal Power Station Guddu from various Gas fields:-

1-	Sui	110 MMCFD
2-	Mari	100 MMCFD
3-	Kandhkot	75 MMCFD

When all the ten generating units are operated on full load, the above gas quota from all the fields is not sufficient and hence oil firing has to be carried out presently 2 elevation of boiler of unit 4 are operated on Furnace Oil to utilize full capacity of the Guddu power generating complex.

As this quota shall remain the same even after commissioning of the Two Gas turbines of the under construction expansion project. Hence it is planned to

BEST AVAILABLE DOCUMENT

run units 3 & 4 on furnace oil for regular operation and the amount of the Natural Gas so saved shall be diverted to the newly commissioned Gas turbines.

OIL STORAGE

The details of oil storage Tanks and their capacities are elaborated here under :-

TANK NO.	CAPACITY	FUEL
1	5500 M.T	Furnace Oil
2	5500 M.T	" "
3	3500 M.T	" "
4	3500 M.T	" "
5	3800 M.T	" "
6	3800 M.T	" "
7	3800 M.T	" "
8	12055550 LTS	" "
9	12055550 LTS	" "
10	12055550 LTS	H.S.D. Oil
11	1345894 LTS	" "
12	1345894 LTS	" "
16	10222870 LTS	" "

BEST AVAILABLE DOCUMENT

CHEMICAL ANALYSIS

H.S.D. OIL

Specific Gravity at 15°C	0.82-0.87
Viscosity Kinetic at 38 °C	1.6 - 5.5 CS
Sediment (% Wt)	0.01
Ash (% wt)	0.01
Carbon residue, conradsion (%wt)	0.1
Sulpher contents (% wt)	Less than 1.0
Water (% wt)	0.05
Flash Point, pensky marten	65°
Higher heating value (KJ/kg)	46,000

NATURAL GAS

	MARI	SUI (Raw)	KANDHKOT
Methane (% volume)	71.2	88.52	79.2
Ethane (% volume)	0.2	0.89	1.1
Propane (% volume)	-	0.26	1.1
Butane and higher (% volume)	-	0.37	0.4
Nitrogen (% volume)	19.5	2.46	16.6
Carbon dioxide (% volume)	9.0	7.35	2.5
Hydrogen sulphide (Gr/100 cmft)	0.1	92.2	30.8

BEST AVAILABLE DOCUMENT

Mercaptan sulphide	-	3.8	1.2
Higher heating value (KJ/NM^3)	26,940	34,740	31,350

FURNACE OIL

Flash point, $C^o(F^o)$		66 (150)
Viscosity at 50^oC (122 ^oF)	Min.	11.8
	Max.	75
Sulpher , % by weight, Max%		3.5
Water,% by volume, max.%		0.5
Sediment by weight max.		0.12
Pour point ^oC (^oF) Max.		24 (75)
Calorific value K Cal/kg		10000
(BTU)/lb)Gross,Min.		(18000)
Specific gravity at 15.5 ^{o} C(60^oF)Max.		0.96

GAS PIPE LINE AND DEHYDRATION

As stated in earlier paragraphs, Gas is supplied to Guddu from three gas fields around this station. All the three gas lines are being maintained by WAPDA. The Dehydration plants at Sui and Mari are also being looked after by WAPDA.

BEST AVAILABLE DOCUMENT

Since these lines are buried at a depth of 3 ft. from average ground level hence involve cathodic protection system to avoid corrosion effects on pipe surface.

Mari Guddu Gas pipeline was commissioned in February,1986, but the C.P. System was completed later and handed to this office on 18-11-1986 . 5 Nos. Transformers Rectifiers of 24 VDC/50 amp were installed at five places on the entire line to maintain max PSP value as -1.5 V at drain points and min -0.85 V on remaining portion. But due to laying of circulating water line and Kandhkot Gas Line, anode ground bed of C.P. Station No.5 was disturbed and Mari Gas Line near Guddu end is unprotected. At present C.P. station No.5 has been shifted to other location.

A dehydration Plant supplied by M/s Siirtec Italy has been installed at Mari and Sui Gas Field to reduce the water content in the gas to 7 Lbs/ MMSCF. Triethylene glycol is used as absorbent for this purpose.

The Plant comprises of:-

- Reboiler

BEST AVAILABLE DOCUMENT

- Absorber or contact tower.
- Gas Cooler
- Glycol / Glycol heat exchanger.
- An over head condenser
- A still column.
- A glycol filter.
- A glycol purifier.
- Kimray Pumps.
- Corrosion Inhibiter pumps.

GAS MIXING STATION

Since the Gas received from three different fields viz Mari, Sui and Kandhkot have different analysis, hence a Gas Mixing Station has been installed to intermix all the gases before combustion.

Highlights of Gas lines

GAS	DISTANCE	DIA OF PIPELINES
Sui	60 K.M.	16" Dia
Mari	60 K.M.	20" Dia
Kandhkot	50 K.M.	16" Dia

BEST AVAILABLE DOCUMENT

ARBORICULTURE

Arboriculture section was established in 1972. At that time area of Power House and Residential Colony was totally barren /deserted and under construction.

Total area of Power House and residential colony is about 903 acres. In 1973 a qualified Arboriculturist was appointed as Arboriculture Superintendent for developing the area by tree plantation and parks to improve the environmental conditions because climate of District Jacobabad is very hot and heavy storms are blowing during major part of year.

Now-a-days the residential colony and Power House area is developed with grassy grounds, parks and thousands of trees, shrub etc. There are well developed grassy play grounds i.e. Cricket, Lawn Tennis, Golf, Hockey and Foot Ball.

The developments of Arboriculture section has improved the environmental conditions of the area by reducing its ambient temperature by approximately 5°C . Moreover

BEST AVAILABLE DOCUMENT

the quantity of dust blown with the air has considerably been controlled, consequently improving the life of the power plant equipment.

The lush green view of the area produces a pleasant effect to the viewers and has a great positive effect on the health of the inhabitants.

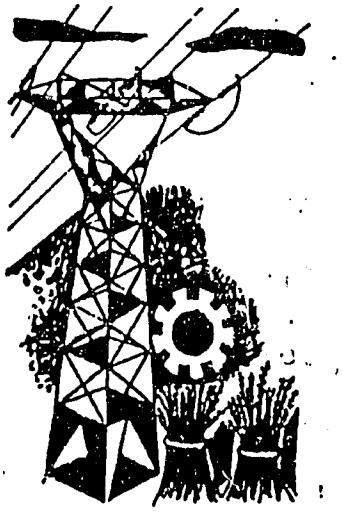

BEST AVAILABLE DOCUMENT

C O L O N Y

Guddu being in the extreme deserted corner of the Sind Province and being far off from any city/ town , Wapda has to provide living facilities to all the employees engaged on the complex for smooth working of the power station. Keeping in view this fact sufficient number of residential units of various categories , a 50 Bed Hospital , an Intermediate College, Two High Schools (Boys and Girls) ,Four Mosques , Community Centre, Club, Market, Bank , Post Office, Telegraph office etc. all are accommodated in the Colony.

The Colony is situated at a distance of 2 KM from the Power - Station, the area of colony is about 500 Acres. About 2600 residences of different categories have been constructed in five stages of construction of Power Station . The colony is very well planted, giving picture of any modern town.

BEST AVAILABLE DOCUMENT

EDUCATION

Wapda has furnished adequate educational facilities for the wards of the employees, working at Guddu . One Intermediate Science College, Two High Schools, (One for Girls and the other for Boys) and one Primary School are functioning at Guddu. Wapda College and Schools have shown distinguished and meritorious performance in the educational level throughout the District and Board.

BEST AVAILABLE DOCUMENT

RECREATION

For recreational activities of employees, Wapda has established one community centre for labour having an auditorium which has multiferous uses such as meeting hall and Cinema hall , besides other Labour functions, Reading rooms, Indoor games etc. are also provided at this Centre.

An officers Club of the standard of A Class Gymkhana has been established with various sports facilities such as Badminton , Squash, Hard and Lawn Tennis , Golf, Swimming pool and an Auditorium. One play ground where arrangements of outdoor games like Volley Ball, Hockey, Cricket, Football etc. also exists. Guddu produces teams at District/ Division level in all games viz Cricket, Football, Volley Ball etc.

BEST AVAILABLE DOCUMENT

HEALTH

Health is one of the basic rights of human being. Wapda, keeping in view this necessity has provided a 50 Bed centrally Air conditioned Hospital for its employees. This Hospital is well equipped with all necessary modern equipment likewise, X-rays, E.C.G., Ultrasound etc. The Clinical Laboratory is also functioning for carrying out all the essential medical tests. The operation Theater is equipped with modern Surgical equipments where major surgical operations are being carried out. The consultation and Medicare is provided in all the basic specialities viz Surgery, Medicine, Gynae, Dental, Eye and E.N.T. Indoor Wards are fully equipped and are also air-conditioned. Authority has allowed emergency treatment including hospitalization and surgery to non-wapda patients living in the nearby villages on nominal charges as that of Govt. Civil Hospital rates. This generous gesture of Authority has earned a will and blessings of the poor people around Guddu . The Hospital is headed by Medical Superintendent with a crew of 8 specialists Doctors, One Dental Surgeon, 6 Medical Officers, 3 lady Medical Officers and necessary para medical staff.

BEST AVAILABLE DOCUMENT

COMPUTERISED MAINTENANCE MANAGEMENT SYSTEM

Guddu Thermal Power Station has been selected as pilot station for the introduction of a Computerised Maintenance Management System.

Its objective is to optimise the economics of carrying out maintenance work within the accepted limits of safety and operational needs thereby improving availability, efficiency and reduction in the 'down time' of the thermal power plant.

The Maintenance Management System will include:-

1) Planned Maintenance and Work Control.
2) Outage Planning and Control.
3) Stores Management Control.

1) PLANNED MAINTENANCE AND WORK CONTROL SYSTEM SHORT TERM PLANNING

The objectives of a P.M. System are to keep the plant concerned in a continuous reliable condition capable of carrying out the task for which it was designed.

It is not intended to evaluate the economics of planned maintenance systems but it should be that a presently designed programme will show benefits whether the savings are accrued by the reduction of maintenance costs or increased availability of plant by the

BEST AVAILABLE DOCUMENT

reduction in breakdowns or an increase in plant efficiency.

- A computer aided maintenance management system known as T.I.M.S. will be used to supply immediate information to enable engineering staff to plan an effective work programme for each maintenance department an a Day to Day basis.

- The computer system will have facilities to store pre-defined work in routine maintenance form, standard trouble report rectification, normal unit Off Load work.

- A work bank consisting of jobs in progress, awaiting assessment or awaiting resources and means of showing progress of jobs through the Work Control system.

- Recording of completed jobs. i.e) HISTORY FILING

WORK SPECIFICATIONS - will be prepared on each item of equipment.

The work instruction will set out in detail how a job is to be performed and will provide precise instruction, step by step in the correct sequence.

- Such detail as drawings showing assembly, etc. clearances etc.

- Type and size of bearings.

BEST AVAILABLE DOCUMENT

- Lifting and slinging methods and weight of equipment to be lifted.

The above information will be stored in the computerised system T.I.M.S.

SPARES MATERIALS AND SPECIAL TOOLS

It is obviously undesirable to plan or start a job without ensuring that the spare parts or special tools required to do the job are available.

The computerised system to be installed will have a terminal link between the Work Control Office and Stores, thereby having the facility to check that items are available.

2) MAJOR OUTAGE PLANNING AND CONTROL

This section known as Long Term Planning has the following objectives:-

i) To ensure unit overhaul are carried out effectively but in the minimum time, thereby reducing unit costs an improving plant availability.

ii) Ensuring that Statutory requirements are being met.

NETWORKS AND WORK LISTS

For large projects such as major overhauls of main plant, it will be necessary to prepare master networks,

BEST AVAILABLE DOCUMENT

work lists, sub-networks etc.

A work list will be prepared for each master activity and will consist of a list of detailed jobs which will successfully complete that master activity, from this a sub-network can be drawn.

A computerised system known as ARTEMIS 7000 will be used to input this information and with approximate durations shown to do each job.

A time analysis and resource analysis schedule will be produced using CRITICAL PATH ANALYSIS. Hence duration of unit outage will be determined, together with resources needed to do the work.

STORES MANAGEMENT CONTROL

The initial stage will be to identify stores items and produce a stores catalogue showing all consumables and spares used. This will be stored in a data bank an T.I.M.S. software package.

A classification and coding system using a recognised method, namely a universal commodity code system will be adopted.

The system defines consumables and plant spares items and will identify duplicated stock and give a logical sequence of stocking arrangements and layout.

BEST AVAILABLE DOCUMENT

Level of control of stock ie) maximum and minimum re-order levels will be assigned to each commodity in order to minimise capital investment in stock yet satisfy the demands from stock using pre-determined levels.

A bonding system will be implemented whereby spares will be identified to ensure that before work on a particular job on item of plant is stored the necessary spares to do this work are available.

Computerised Maintenance Management is now being set up and work has been taken in hand with a team of WAPDA Engineers and BEI consultants.

The time scale allocated is a period of two years.

BEST AVAILABLE DOCUMENT

11/15.75/132/220/500 KV ONE LINE DIAGRAM (ELECTRICAL SYSTEM)

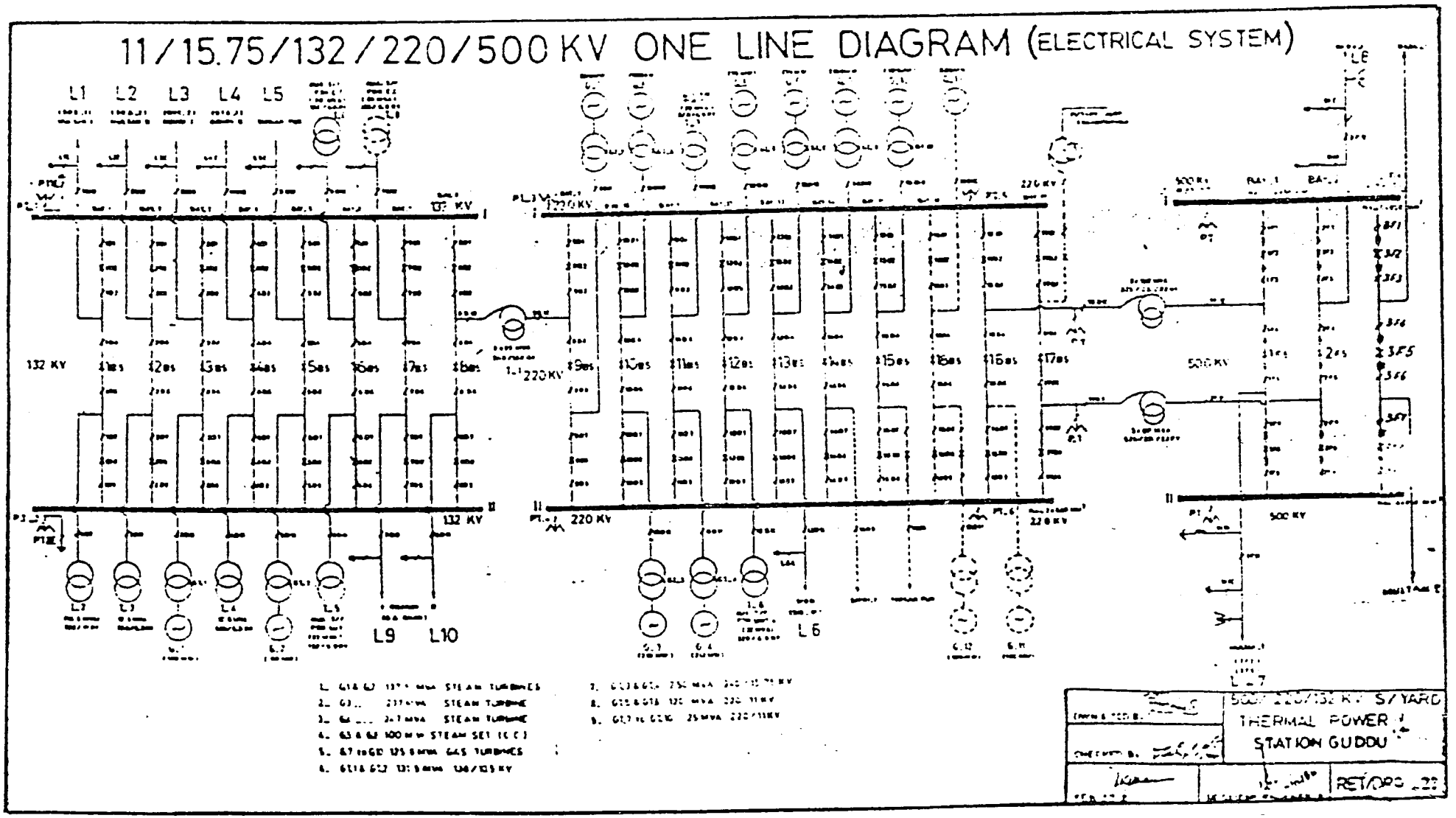

BEST AVAILABLE DOCUMENT

ORGANISATION CHART

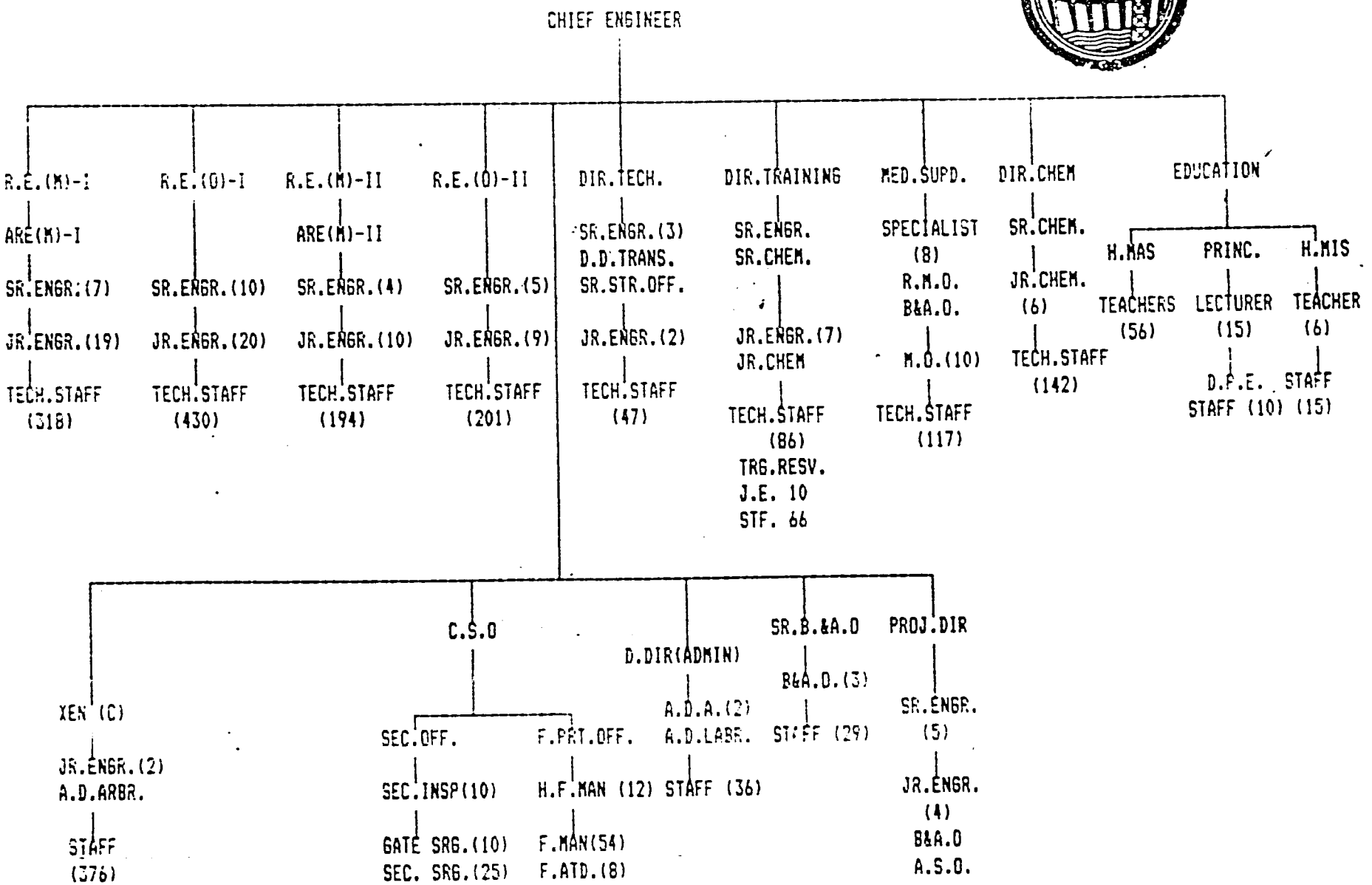

BEST AVAILABLE DOCUMENT

101

POWER GENERATING UNITS

T. P. S GUDDU

(SIGNIFICANT DATA UP TO 31.12.1991)

UNIT NO.		CAPACITY (MW)	MAKE	D.O.C	GENERATION (Mkwh)	RUNNING HRS
1	STEAM	110	CZECH	30.03.74	9414	118237
2		110	CZECH	06.10.74	8002	102186
3		210	USSR	07.11.80	13926	79294
4		210	CHINA	29.12.85	6121	35124
5		100	U.S.A	18.12.87	2128	29382
6		100	U.S.A	22.03.88	1818	30298
7	GAS	100	U.S.A	20.12.85	3542	39286
8		100	U.S.A	01.04.86	3868	42311
9		100	U.S.A	06.03.86	3833	43013
10		100	U.S.A	12.04.86	3140	35382

BEST AVAILABLE DOCUMENT

UNIT WISE PLANT PERFORMANCE SINCE COMMISSIIONING UP TO 31.12.1991

UNITS IN MKWH

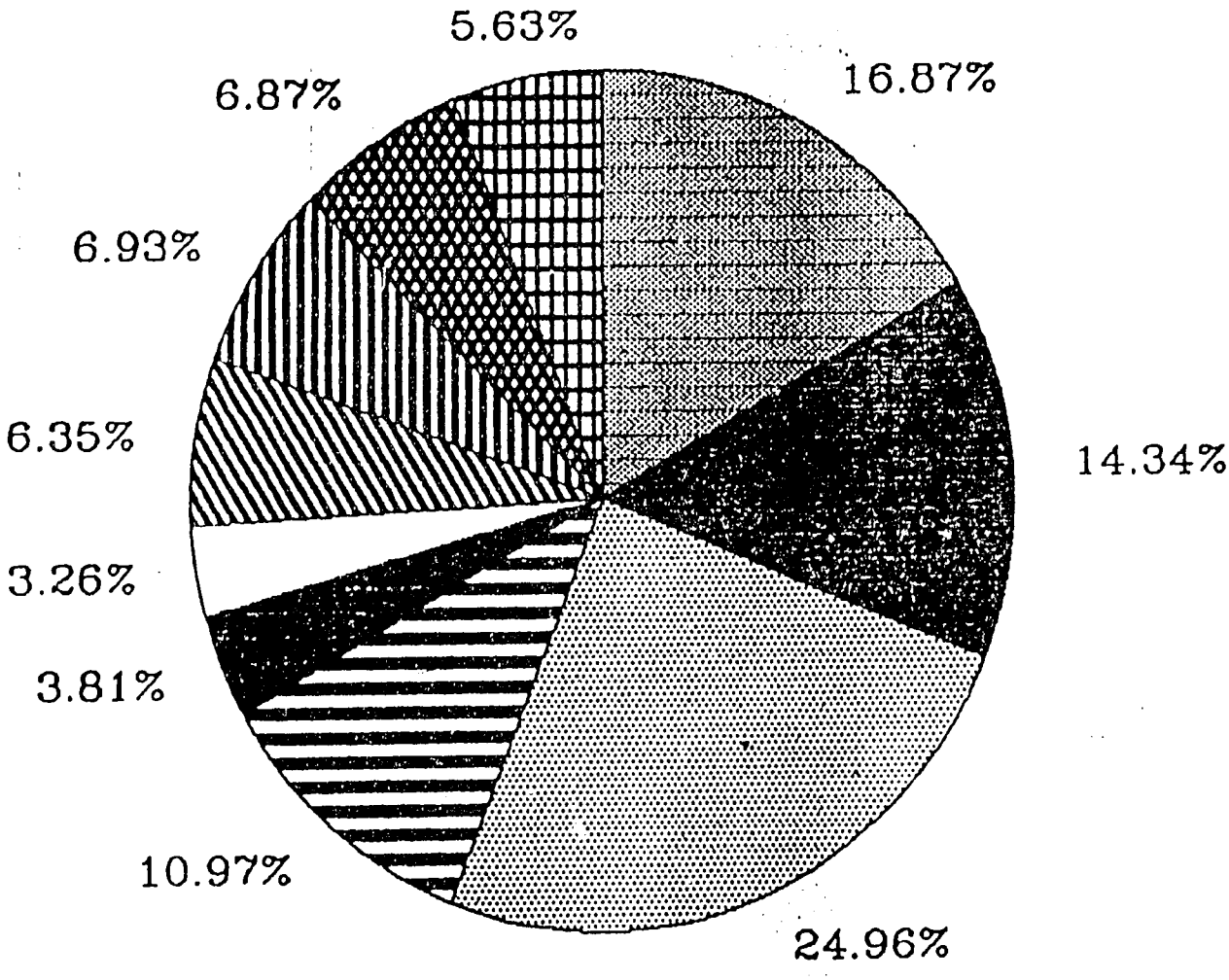

UNIT-1 UNIT-2 UNIT-3 UNIT-4
UNIT-5 UNIT-6 UNIT-7 UNIT-8
UNIT-9 UNIT-10

BEST AVAILABLE DOCUMENT

UNIT WISE PLANT PERFORMANCE SINCE COMMISSIIONING UP TO 31.12.1991

UNITS IN MKWH

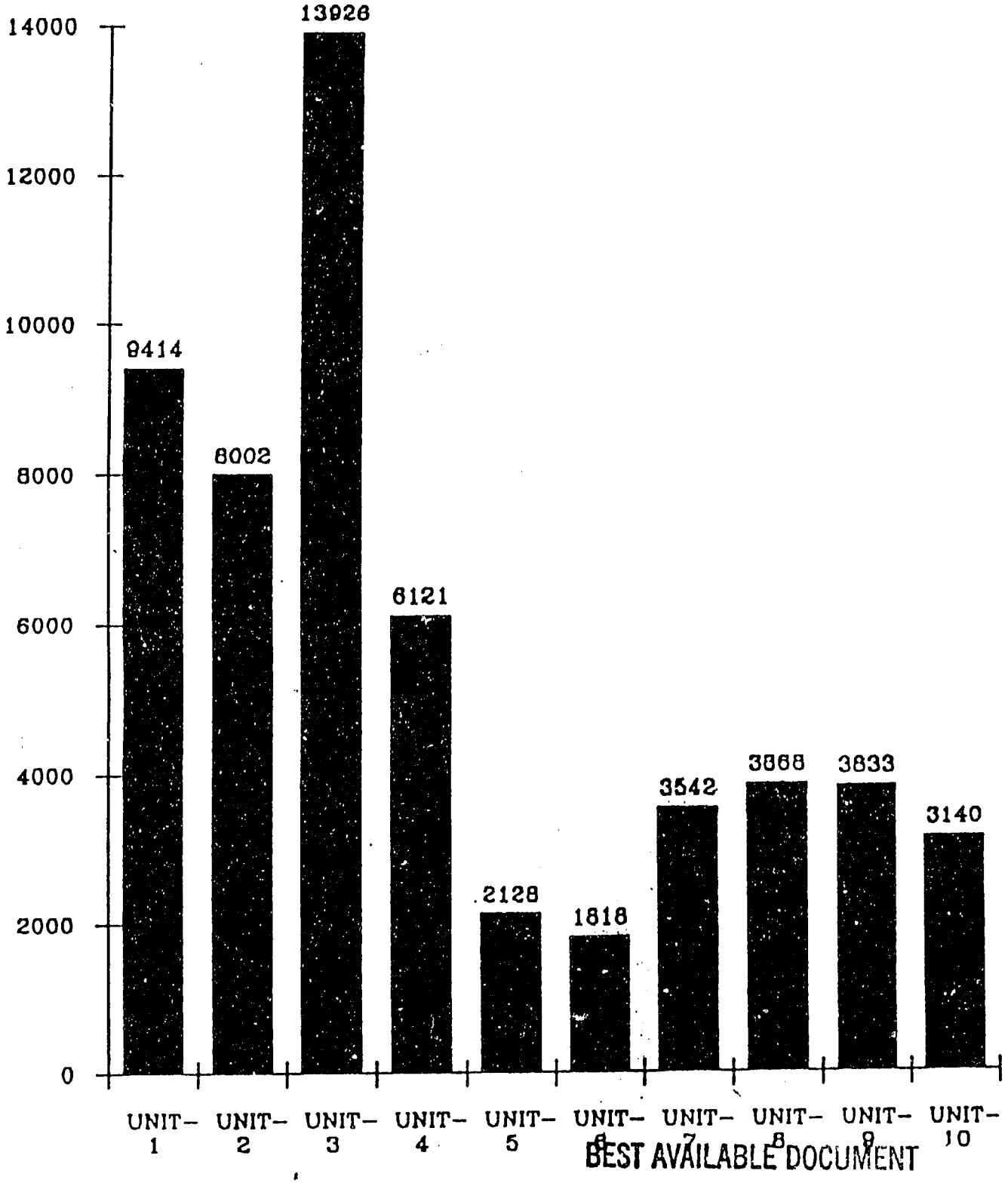

BEST AVAILABLE DOCUMENT

UNIT WISE PLANT PERFORMANCE SINCE COMMISSIONING UP TO 31.12.1991
(RUNNING HOURS)

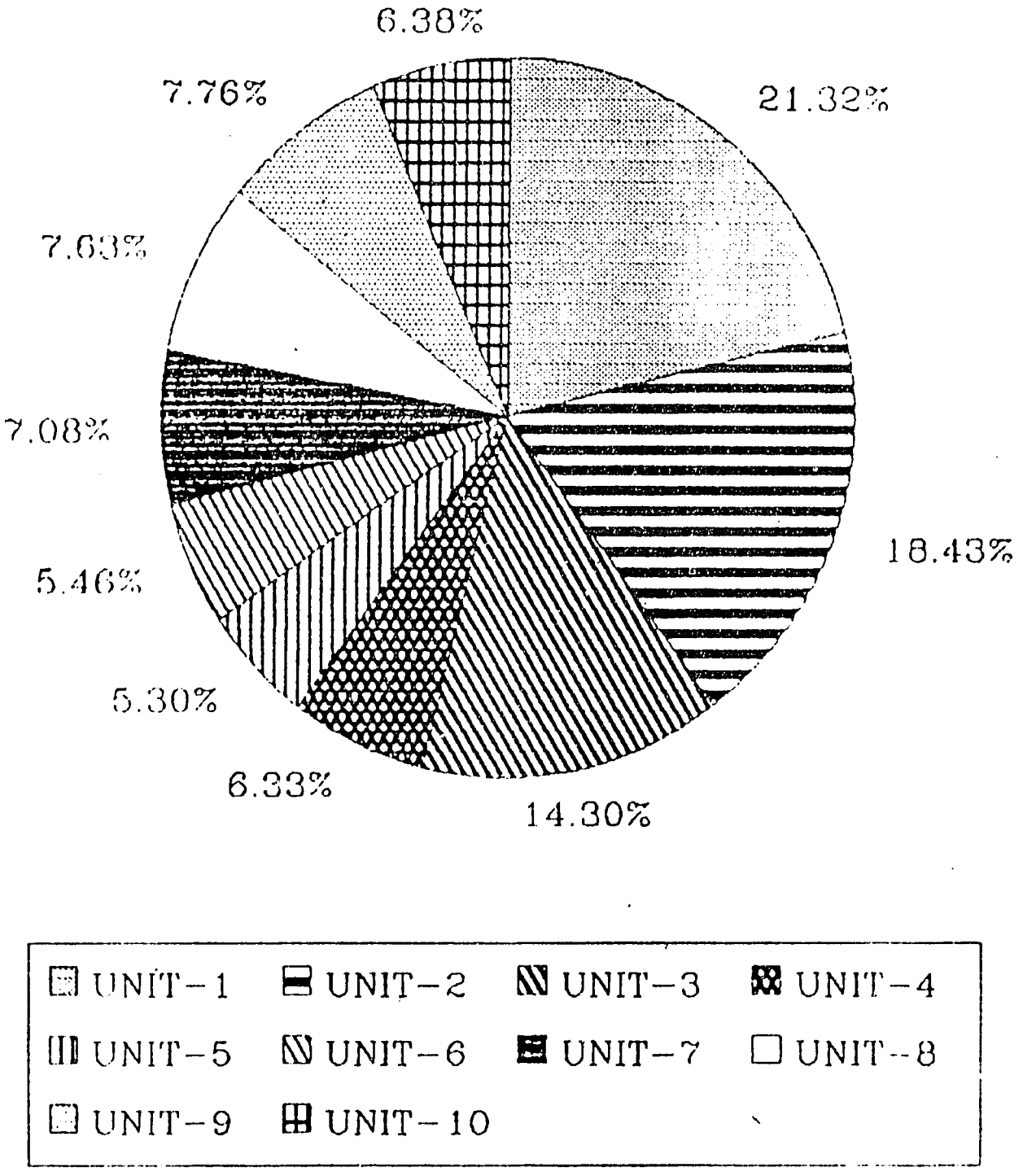

BEST AVAILABLE DOCUMENT

UNIT WISE PLANT PERFORMANCE SINCE COMMISSIONING UP TO 31.12.1991

(RUNNING HOURS)

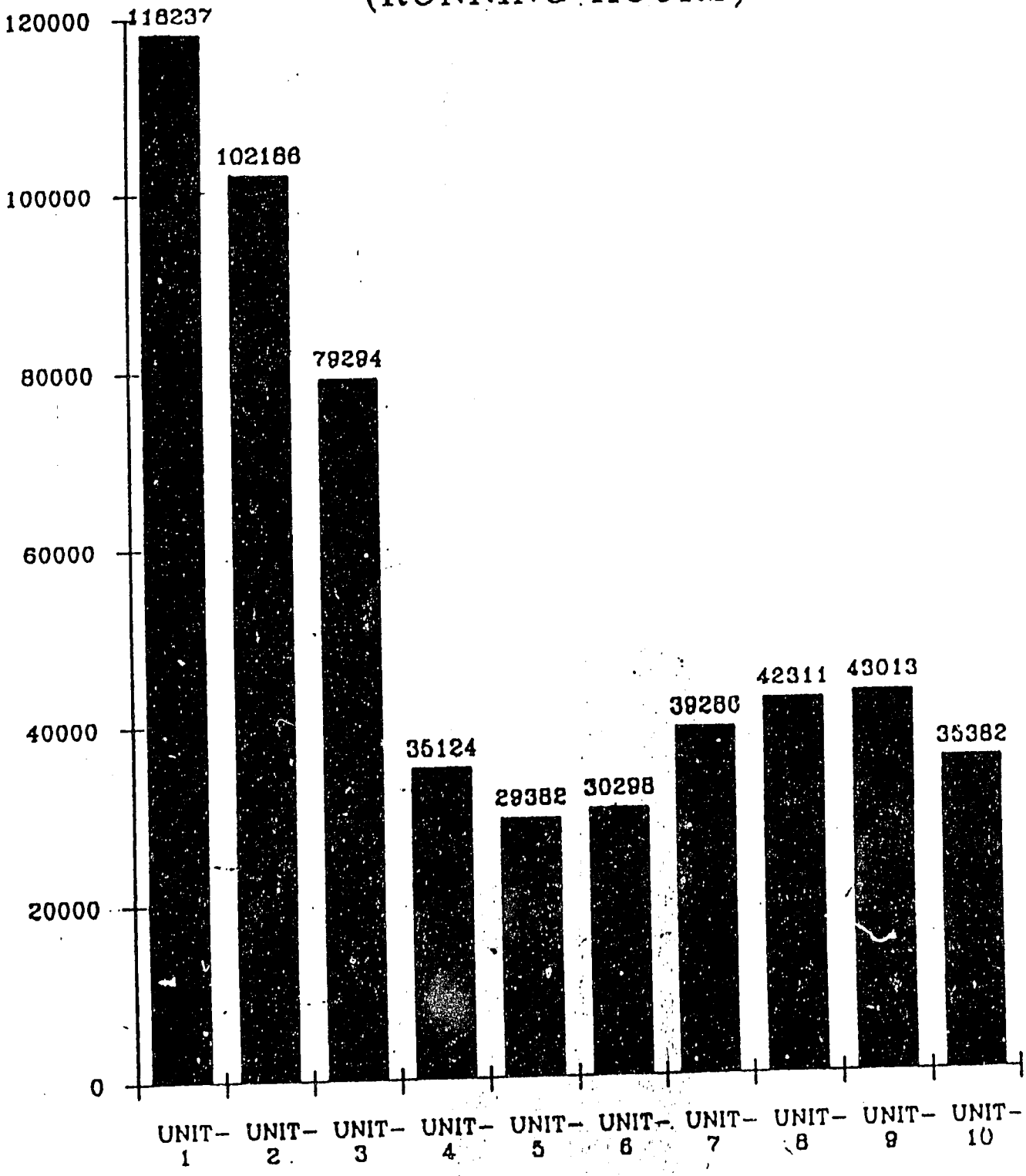

BEST AVAILABLE DOCUMENT

UNIT WISE PLANT PERFORMANCE FOR THE YEAR 1991 (RUNNING HOURS)

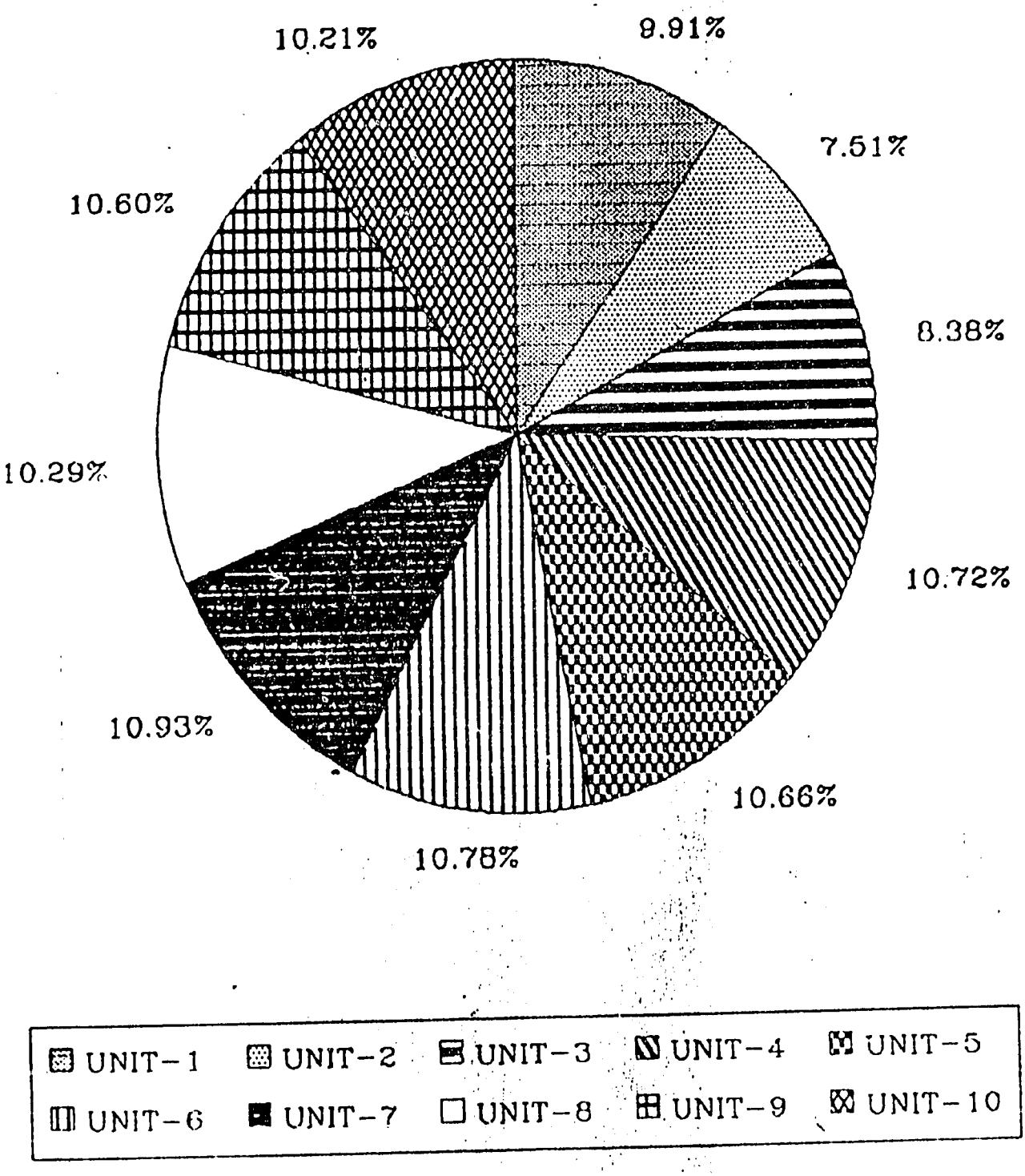

BEST AVAILABLE DOCUMENT

UNIT WISE PLANT PERFORMANCE FOR THE YEAR 1991

(RUNNING HOURS)

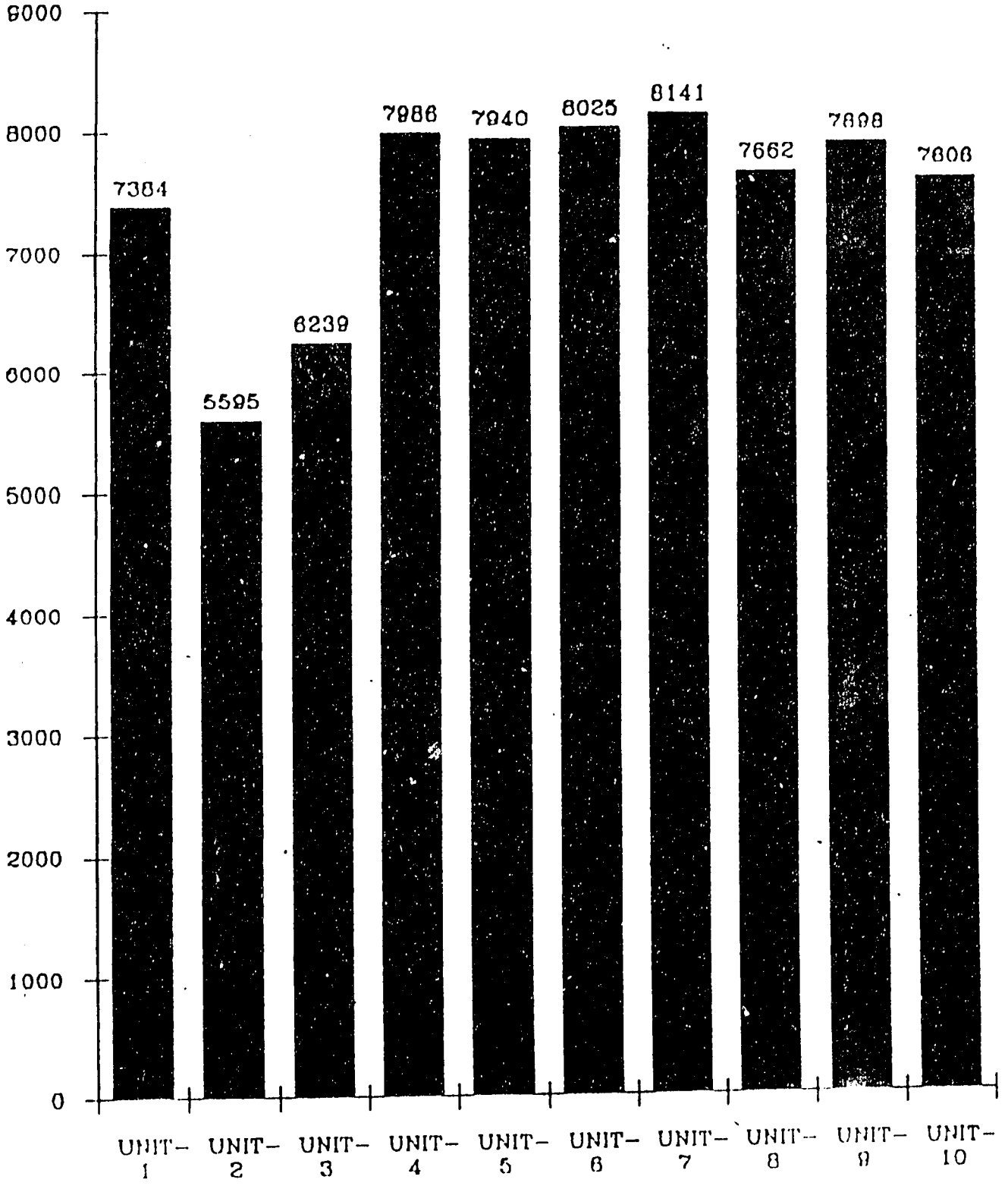

BEST AVAILABLE DOCUMENT

GUDDU POWER GENERATION COMPLEX

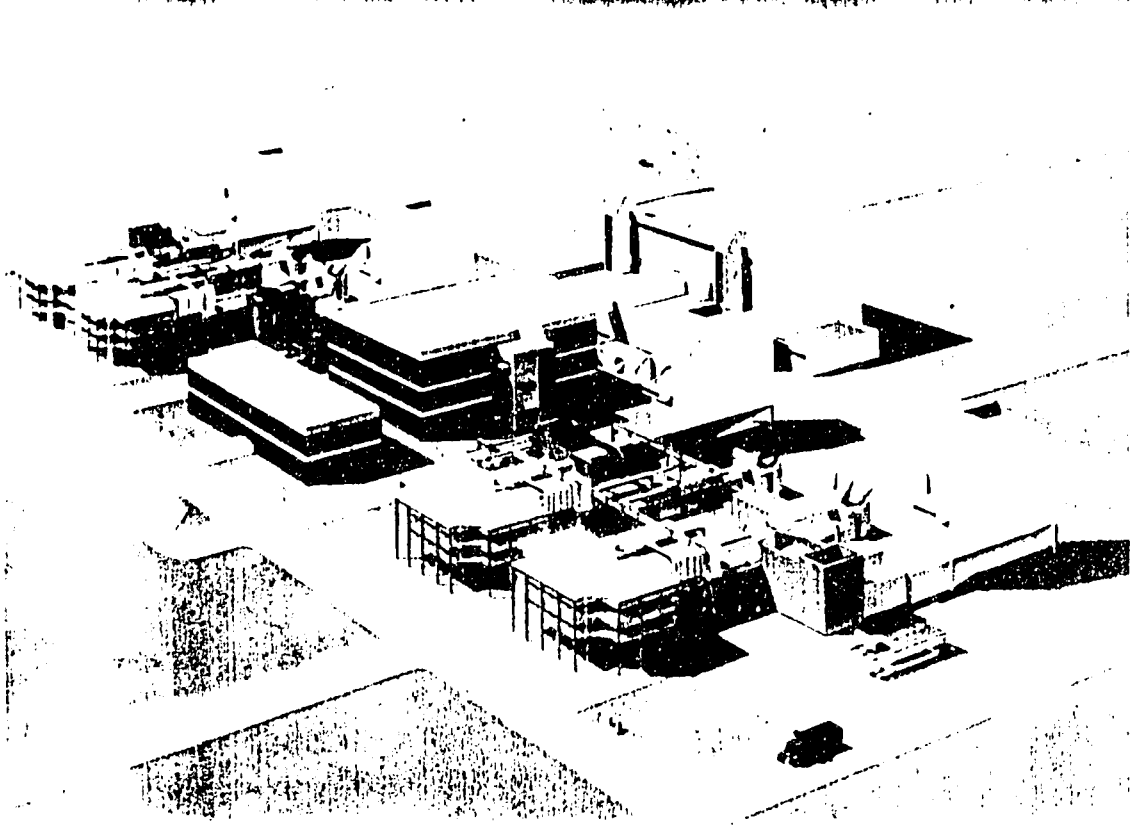

BEST AVAILABLE DOCUMENT