PN-ABU-875

Pakistan
Water And Power Development Authority
GUDDU Combined Cycle Power Plant

26/R
IV/R

GUDDU Combined Cycle Power Plant
Gas Fuel Study

November 1987

by

Lewis E. Hussain,	WAPDA Consultant
Franklin Parker,	Independent Consultant
Leroy O. Tomlinson,	General Electric
Lloyd Winsor,	Gibbs & Hill

BEST AVAILABLE DOCUMENT

GIBBS & HILL, INC.

Dravo Engineering Companies, Inc.
11 Penn Plaza
New York, New York 10001-2059
212 216-
Telex: 428813/177199

A Dravo Company

November 23, 1987

WAPDA
Guddu 450 MW Combined Cycle Project
WAPDA, Lahore

Attention: Mr. Nazim Husain Siddiqui
General Manager (Design & Development) Thermal

Subject: GUDDU 450 MW CCP
Lot 1A/1B: Gas Turbines & Accessory Equipment
Gas Fuel Study Team
Final Report

Dear Mr. Siddiqui:

On behalf of the Gas Fuel Study Team, I am pleased to enclose two (2) copies of the Final Report entitled "Guddu Combined Cycle Power Plant, Gas Fuel Study".

Certain operational problems had been experienced with the General Electric installed MS-9001 Model E gas turbines at the Guddu Power Plant. These problems were initialy assumed to be related primarily to liquids in the feed gas supply system to the gas turbines. However, with the passage of time, the acquisition of operating data, the inspections and analysis of the type and causes of damage occurring in the gas turbine the emphasis is focusing on physical design factors of the combustion system rather than liquids in the gas.

A Gas Fuel Study Team consisting, of the following Team members was assembled to evaluate the deleterious effects of liquids in the gas fuel feed on gas turbine availability and reliability. The Teams charter is to recommend the remedial measures to be taken.

Dravo

BEST AVAILABLE DOCUMENT

Team Members:

WAPDA Consultant	-	Lewis E. Hussain
Independent Consultant	-	Franklin Parker
General Electric	-	Leroy O. Tomlinson
Gibbs & Hill	-	Lloyd Winsor

Certain sections of the report have been prepared by individual Team members based on their specific experience, hands-on knowledge or their access to information not available to the entire Team. The principal sections in the report in this category include:

Sections V-6.1 Fuel Gas Specifications/Contracts and VI, General Electric Statement of Combustion System Problems, which were prepared by the General Electric Team member

Section V-4, Future Gas Field Plans and V-6.2, Specifications GEI-41040C which were prepared by the WADPA Consultant

As a result of the above there may be apparent differences of opinion pertaining to the following areas.

The actual amount of entrained liquids in the gas fuel

The extent to which liquids reached the gas turbine

The arrival of large slugs of liquid to the Guddu plant

The causes for gas turbine shutdown

The source of fuel to be used at Guddu

The actual impact of liquids in the gas feed to the gas turbines and the physical damage in the combustion system

In general, however, the Team is in agreement on the contents of the summary, conclusions and recommendations sections of the Final Report.

The recomendation to immediately shut down the gas turbines in the event that a slug of liquid should pass through the proposed liquid scrubbers or existing Peerless scrubbers was made for the purpose of protecting the gas turbines from

Dravo

BEST AVAILABLE DOCUMENT

b

probable extensive physical damage. WAPDA, however, should consider the overall impact upon their power distributions grid if all six (6) gas turbines should be simultaneously shut down.

A review of gas samples dating from June 1983 plus those taken by the Team, with the exception of the gas samples analyzed by the Hydrocarbon Development Institute (HDI) has led to the conclusion that the gas is in general conformance with the specification. It should be noted that the analytical results of the HDI samples are not consistent with the previous analyses. This may be attributable to the composition of the gas during the sampling period or analytical procedures. The latter is more suspect.

The existing Guddu on-site Sui, filter-separation system is inadequate due to design and lack of adequate controls and should be upgraded or replaced.

The existing Peerless scrubbers on the individual gas turbines will remove all of the entrained liquids in the fuel gas and meet specifications except for large surges or slugs.

The fuel gas heaters, as specified, will superheat the gas and vaporize small quantities of liquid hydrocarbon mist. However, large quantities of liquid, if present, will pass through the heaters unvaporized. Any hydrocarbons whose boiling point exceeds 120 deg. F (Hexanes and higher) will not be vaporized.

The installation of liquid scrubbers between the mixing stations and fuel gas heaters is recommended. These scrubbers will act as buffers to prevent large surges or slugs of liquid from entering the heaters and downstream equipment.

The liquid's problem is associated primarily with Sui gas. Sui gas should not be supplied to the gas turbines until provisions are made to eliminate any possibility of liquids entering the gas turbines. There has been no noticeable quantity of liquid in either the Mari or Kandhkot gas.

Extraordinary measures had been employed to meet the initial startup date. The fuel gas supply system supplied Sui gas to the gas turbines directly from the pipeline, bypassing the Sui filter-separators at Guddu. Hydrocarbon liquids

BEST AVAILABLE DOCUMENT

C

removed by the General Electric installed Peerless scrubbers enabled the gas turbines to produce power during the first year of operation. Problems were discovered during the first combustion system inspection. Some of the gas turbine combustion system problems were related to design and assembly problems. However, the evaluation was confused by startup fuel gas supply problems, previously noted which including liquid hydrocarbons at the inlet to the Peerless scrubbers and fuel gas temperatures lower than design. The operating reliability was improved by turbine modifications made by General Electric to accommodate the lower fuel gas temperature and changing from Sui to Mari and Kandhkot gas supplies. To further enhance the already incorporated changes General Electric is incorporating additional modifications (increased stiffness of seals at combustion liner discharge, increased clearance between combustion liner and flow sleeves and thermal barrier coatings on transition pieces as parts are repaired and replaced), performing laboratory tests to assure that fuels are not contributing to parts wear and providing upgraded combustion system assembly procedures to the site.

All applicable comments on the draft report from USAID, WAPDA, GE and G&H has been incorporated in the report. Those comments, mainly from Gibbs & Hill Pakistan, not included, will be answered in a letter to Mr. S. D. I. Reimers.

With the issuance of the Final Report the Team has completed its assignment on this project. The Team or select members, as required, are available to answer specific questions or follow up on specific recommendations or additional tasks at the request of USAID.

Very truly yours,

Gibbs & Hill, Inc.

Lloyd Winsor

Lloyd Winsor
Fuel Gas Study
Team Coordinator

LW:lc
Enclosures

CC: S. D. I. Reimers (G&H Lahore) 2 Copies
M. W. Choudhry (USAID Islamabad) 1 Copy
L. E. Hussain (WAPDA) 1 Copy
F. Parker (Independent Consultant) 1 Copy
L. O. Tomlinson (GE) 1 Copy

Dravo

BEST AVAILABLE DOCUMENT

Pakistan
Water And Power Development Authority
GUDDU Combined Cycle Power Plant

GUDDU Combined Cycle Power Plant
Gas Fuel Study

November 1987

by

Lewis E. Hussain,	WAPDA Consultant
Franklin Parker,	Independent Consultant
Leroy O. Tomlinson,	General Electric
Lloyd Winsor,	Gibbs & Hill

BEST AVAILABLE DOCUMENT

CONTENTS

PAGE

I. INTRODUCTION 1

II. SUMMARY 9

III. CONCLUSIONS 12

IV. RECOMMENDATIONS 15

1. High Priority Recommendations 15

2. Additional Recommendations 19

V. REPORT OF GAS FUEL STUDY 21

1. Fuel Gas Analyses 22

1.1 General

1.2 Gas Analyses Obtained

1.3 Liquids in Sui Gas

1.4 Qualitative Evaluation

2. Review of Fuel Gas Operating Data 37

2.1 Review of Operations Data With Regard to Fuels Gas

3. Gas Field Treatment Facilities 52

3.1 General

3.2 Sui Gas Field Treatment Facilities

3.3 Mari Gas Field Treatment Facilities

3.4 Kandhkot Gas Field Treatment Facilities

4. Future Gas Field Plans 63

4.1 Future of Gas Supply from Sui

BEST AVAILABLE DOCUMENT

f

PAGE

5. Gas Treatment Facilities at Guddu 66

5.1 Sui Gas Treatment Facilities

5.2 Mari & Kandhkot Gas Treatment Facilities

5.3 Mixing Station

5.4 Gas Turbine Fuel Gas Scrubbers

5.5 Liquids in Gas Turbine Fuel Gas Supply

6. General Electric Fuel Gas Specification Review 80

6.1 Fuel Gas Specification/Contracts

6.2 Specification GEI-41040C

7. Additional Gas Treatment Facilities 96

7.1 Fuel Gas Heater Liquid Scrubbers

7.2 Sui Dehydration System Study

7.3 Sui Guddu Site Filter-Separator Study

7.4 Mari Gas Field Glycol Filter-Separator Study

8. Estimated Cost and Schedule For Fuel Gas Heater Liquid Scrubbers ...108

8.1 Cost Estimates

8.2 Schedule

9. Operations and Maintenance 112

9.1 General

9.2 Gravity Meters

9.3 Level Controllers and Drains

9.4 High Level Alarms

9.5 Gages and Thermometers

9.6 Pressure Controllers

BEST AVAILABLE DOCUMENT

8

PAGE

VI. GENERAL ELECTRIC STATEMENT OF COMBUSTION SYSTEM PROBLEMS ...116

1. General

2. Combustion and Fuel Gas Control System Description

3. Fuel Gas/Combustion System Operation Summary

4. Effect of Key Fuel Gas Characteristics on Gas Turbine Operation

5. Guddu Gas Turbine Problems

6. Gas Turbine Modifications

7. Fuel Gas Change

VII. SIGN-OFF SHEET 144

APPENDIX

1. Documents Supporting Reports of Liquids in Gas Fuel

2. Documents Supporting Mari Glycol Losses

3. Fuel Gas Heater Liquid Scrubber Quotations

BEST AVAILABLE DOCUMENT

INDEX OF TABLES

Item No.	Service
V-1.2-A	Fuel Gas Composition Provided to General Electric for Gas Turbine Design (Page 30)
V-1.2-B	Comparison of Sui Specification Gas Versus Four Sui Raw Gas Samples (June 10, 1983) (Page 31)
V-1.2-C	Sui Gas Samples 1 and 2 taken from GE Turbine No. 2 on January 5, 1986 (Page 32)
V-1.2-D	Gas Turbine No. 3, Performance Test Gas Samples (Page 33)
V-1.2-E	Identification of Gas Samples Taken by Team (Page 34)
V-1.2-F	Analyses of Gas Samples Taken by Team (Page 35)
V-2.1-A	Month-wise Consumption of Fuel Gas for 450 MW Gas Turbines Since Commissioning (Page 42)

BEST AVAILABLE DOCUMENT

V-2.1-B Month-wise Consumption of Fuel Gases for 450 MW Combined Cycle Plant, November 1986 to June 1987 (Page 43)

V-2.1-C Condensate Collected from Fuel Gas Scrubbers for 450 MW Combined Cycle Plant (Page 44)

V-2.1-D Temperature Fuel Gas From Scrubber Versus Ambient Temperature for GE-GT-4 (G-10) From April 13, 1987 to June 30, 1987 (Page 45)

V-2.1-E Temperature Fuel Gas From Scrubber Versus Ambient Temperature for GE-GT-1 (G-7) From June 8, 1987 to June 30, 1987 (Page 47)

V-2.1-F GE-GT-1 Performance Record From Commissioning to June 1987 (Page 48)

V-2.1-G GE-GT-2 Performance Record From Commissioning to June 1987 (Page 49)

V-2.1-H GE-GT-3 Performance Record From Commissioning to June 1987 (Page 50)

V-2.1-I GE-GT-4 Performance Record From Commissioning to June 1987 (Page 51)

BEST AVAILABLE DOCUMENT

J

INDEX OF FIGURES

Item No.	Service
V-1.3-A	Gas Chromatograph Analysis of Liquid Sample from Sui Gas Filter-Separator Blowdown (Page 36)
V-7.1.1-A	Fuel Gas Heating and Liquid Scrubber System (Page 101)
V-7.1.1-B	Liquid Scrubber Controls (Page 102)
VI-5.2-A	Combustion Chamber Details and Flow Diagram (Page 122)
VI-5.2-B	Fuel Nozzle Assembly (Typical Air Atomized, Dual Fuel) (Page 123)
VI-5.2-C	Slot Cooled Combustion Liner (Page 124)
VI-5.2-D	Fuel System Schematic (Natural Gas)

BEST AVAILABLE DOCUMENT

I. INTRODUCTION

A combined cycle power plant of approximately 600 MW (iso rating) electrical generating capacity has been purchased by the Pakistan Water and Power Development Authority (WAPDA). The gas turbines, heat recovery steam generators, steam turbines, and associated system equipment and structures are being furnished by General Electric, USA (GE). Foreign currency financing has been furnished by the Asian Development Bank (ADB) and the United States Agency for International Development (USAID).

First phase of the development consists of four General Electric MS-9001 model E gas turbines. Exhaust gas from the turbines is used to generate steam in four heat recovery boilers to generate additional electric power using two conventional steam turbine generators in the second phase of the project.

It is planned that the combined cycle plant be expanded in the near future to provide an additional 300 MW (iso rating) of generating capacity employing two gas turbines, two heat recovery boilers and one steam turbine generator of similar design to those already furnished.

BEST AVAILABLE DOCUMENT

Some operational and reliability problems have been experienced by the gas turbines. Part of the problems have been related to the design of the gas turbines and some to the fuel gas. The problems related to fuel occurred when the gas turbines were fired on Sui gas directly from the pipeline, bypassing the on-site Guddu station filter-separators and with inlet fuel gas temperature lower than design. Modifications were made to accommodate the lower fuel gas temperature and the use of Sui gas was discontinued. These changes improved the gas turbine operation, but wear of combustion system parts has continued which requires inspection and replacement of combustion system parts at operating intervals shorter than expected.

A Gas Fuel Study Team consisting of the following members was formed for consideration of those problems related to fuel gas supply:

WAPDA Consultant	Lewis E. Hussain
Independent Consultant	Franklin Parker
General Electric engineer	Leroy O. Tomlinson
Gibbs & Hill engineer	Lloyd Winsor

The organization of this Team, its objectives, the scope of activities, the schedule of its activities and the report to be produced are outlined in the Team's Charter which follows.

BEST AVAILABLE DOCUMENT

July 21, 1987

GUDDU COMBINED CYCLE POWER PLANT
GAS FUEL STUDY TEAM

1.0 OBJECTIVE

1.1 The team shall determine if the gas fuels currently in use at the Guddu site are suitable for use in the GE Frame 9 gas turbines. In the event that the team determines that the gas fields are not suitable the team shall develop recommendations for gas fuel treatment.

1.2 The emphasis and thrust of the team's investigations shall be upon liquids which may be present in the gas fuels and, if found to be present, their potential for deleterious effects upon gas turbine operation, and, if such potential is confirmed, the remedial measures which should be taken.

2.0 TEAM MEMBERS

2.1 The team shall be comprised of four persons:

a. A WAPDA engineer

b. A General Electric engineer

c. A Gibbs & Hill engineer

d. An independent gas consultant

2.2 The WAPDA, GE and G&H engineers shall be drawn from outside the existing project staff in order that they can approach the subject in an independent manner and without preconceived ideas.

3.0 SCOPE OF WORK

3.1 The team's scope of work shall include, but need not necessarily be limited to, the following:

3.1.1 Determine the actual analyses of the gas fuels being supplied to the gas turbines with particular emphasis on the composition and quantities of any liquid components.

3.1.2 Review operations data with specific regard to the gas fuels.

3.1.3 Inspect and review the gas treatment facilities at the Mari, Sui and Kandhkot gas fields.

3.1.4 Review planned activities at the gas fields which could have an impact upon gas quality or composition in the future.

BEST AVAILABLE DOCUMENT

3.1.5 Inspect and review the gas treatment facilities at the Guddu plant site.

3.1.6 Determine whether the gas fuels, as currently delivered to the gas turbines, or as likely to be delivered during the cooler winter months, are suitable for use in the gas turbines. The fuel specification which shall be used as basis is GE specification GEI-41040C (copy attached). The team shall review this specification and elaborate upon it if required.

3.1.7 If it is determined that further gas treatment is required, develop recommendations regarding what needs to be done to render the gas fuels suitable for use in the gas turbines.

3.1.8 Prepare estimates of the cost and procurement and erection lead times for any additional equipment which it is recommended be installed.

4.0 SUPPORT

4.1 The existing WAPDA, GE and G&H project team will provide the gas fuel study team with infrastructural and other support as required.

5.0 SCHEDULE, COORDINATION AND REPORTING

5.1 The anticipated schedule from initiation to completion is from three to four weeks. The team's activities through release of a draft report (see below) will be performed entirely in Pakistan except for any home office preparation that may be required.

5.2 The team shall decide upon a team coordinator at their first meeting and this individual shall be responsible for interfacing with WAPDA, GE and G&H project management in Pakistan and for issuing progress and status reports and for ensuring that the draft of the team's final report and the final report are issued in a timely manner.

5.3 The team shall provide WAPDA, GE, G&H and USAID management with a telexed progress and status report at the end of each week's activities.

5.4 The team shall issue a draft report documenting their findings, conclusions and recommendations at the end of their activities in Pakistan. A final report will be issued no later than four weeks after the issue of the draft report. All four team members will document their acceptance of the draft and final reports by appending their signatures thereon. If any team member is unable to accept a majority report then it is incumbent upon him to issue a minority report.

BEST AVAILABLE DOCUMENT

SPECIFICATIONS FOR GAS TURBINE FUEL GASES

GENERAL

Because of the increased use of General Electric gas turbines in a wide variety of industrial applications, both in the United States and other parts of the world, it has become important to set forth specifications on fuel gases that can be tolerated in the gas turbine. The specifications and a discussion of the different parts of the specifications are presented in the paragraphs that follow.

FUEL GAS SPECIFICATIONS

CONTAMINANTS

1. The solid materials in the gas, exclusive of hydrocarbon materials shall not exceed 30 ppm by weight. The size and density distribution of the solid particles must be such that not more than 1.0 percent by weight of the particles shall have a terminal settling velocity in air (70F and 30 inches Hg, absolute) greater than 14 inches per minute, and not more than 0.1 percent shall have a terminal settling velocity in excess of 23 inches per minute.

   For a solid spherical particle, Stroke's Law of settling permits calculating the terminal settling velocity if the particle diameter and particle specific gravity are known. The following tabulation gives the particle diameters equivalent to the limiting terminal settling velocity values.

Settling Velocity In./Min.	Equivalent Spherical Particle Diameter in Microns	
	Sp. Gr. = 2	Sp. Gr. = 4
14	10	7
23	13	9

2. Any water in the gas above the saturation amount at its point of use shall not exceed a quarter of a percent by weight.

3. The gas shall be what is known in the industry as "dry gas", that is, the gasoline vapor in 1000 cubic feet of gas at standard conditions (60F and 30 inches Hg, absolute) shall be equivalent to not more than 0.1 gallon liquid.

BEST AVAILABLE DOCUMENT

NOTE

"Wet" gases shall not be excluded as a fuel for gas turbines, but when used, provision shall be made to avoid too sudden a change in heating value during starting and running. (See "Heating Value" in "Discussion" section, following.)

4. No naphthalene or gas hydrates or other solid or semi-solid hydrocarbons shall condense from the gas when its temperature is dropped by 20F at constant pressure.

HEATING VALUE

The lower or net heating value must lie in the range of 300 to 5000 Btu per cubic foot. However, whatever heating value is specified for a given application within this range, it shall not differ from the design or specified value by more than plus or minus 10 percent.

FLAMMABILITY LIMITS

The minimum ratio of upper to lower flammability limits is 2.2:1. Flammability limits to be determined at 60F and 1 atmosphere.

COMPOSITION

1. The concentration of hydrogen sulfide H_2S, sulfur dioxide SO_2, sulfur trioxide SO_3, total sulfur, and carbon dioxide CO_2 to be encountered, shall be specified. This shall be done so that proper precautions can be taken if necessary to prevent elevated temperature corrosion of turbine blading materials, and ambient temperature corrosion of control valves and systems.

2. The total amount of sulfur and the alkali metals, sodium, potassium, and lithium, shall be less than that required to form the equivalent of 5 ppm of alkali metal sulfates in the fuel. The sulfur and alkali metals may be present in either the gaseous phase or in the liquid and solid contaminants, and combine to form corrosive alkali metal sulfates during the combustion process.

3. The exception to paragraphs 1 and 2 is for exhaust-heat-recovery applications utilizing equipment in the exhaust stream for heating water and/or generating steam. The applications shall require a gas which contains less than 30 ppm total sulfur. Sulfur will convert to sulfur trioxide in the gas turbine combustion system. The sulfur trioxide will then condense into sulfuric acid at the liquid-vapor equilibrium temperature (which temperature is a function of the SO_3 concentration). The specified maximum sulfur concentration of 30 ppm will adequately protect the heat-recovery equipment from corrosion.

DISCUSSION OF SPECIFICATIONS

CONTAMINANTS

The contaminants likely to be found in fuel gas, of course, depend on the kind of gas involved, such as natural gas, coke oven gas, water gas, producer gas, etc. However, some of the contaminants which are likely to be found consist of the following:

1. Tar, lamp black and coke
2. Water
3. Sand or clay
4. Rust or iron oxide
5. Iron sulfide

BEST AVAILABLE DOCUMENT

6. Scrubber oil

7. Lube oil

8. Naphthalene and gas hydrates

Water, either as a liquid or as ice, is apt to constitute the largest contaminant occurring in gas distribution systems. In the case of natural gas or gas distributed for domestic use, these contaminants listed above, form such a nuisance that the gas is usually cleaned before it is transmitted through the gas pipeline. Thus, the solids which are entrained in the gas pipeline consists principally of iron oxides and iron sulfides which are formed by corrosion of the gas pipeline.

An interesting figure in regard to the contamination of fuel gas as a result of corrosion of the pipeline is given as follows: If a 800-psig gas pipeline of 30-inch diameter, 1/2-inch wall thickness and 30-mile long could completely disintegrate in 100 years in a uniform manner, the solid material it would put into the volume of gas that could be carried by this size pipeline would result in a concentration of about 200 ppm of such solid material in the gas.

Scrubbers are generally used to remove tar and lamp black, and hydrogen sulfide is often removed by reacting the gas with iron oxide. However, in industries, refineries, coke plants, etc., any state of cleanliness can be encountered and it is advisable to establish the conditions resulting therefrom that must be satisfied in the design of the gas turbine.

HEATING VALUE

In general, the fuel gases which are distributed in American cities, those found in major transmission lines, and the natural gases from various gas fields have a heating value range which lies well within the plus or minus 10 percent specified. Some Japanese gases and natural gases in wider spread parts of Venezuela have heating values that differ by 2 or 2-1/2 to 1. Some industrial and refinery gases may have heating values that differ by as much as 3 to 1. Thus, considering the minimum fuel and firing requirements of a gas turbine, the standard General Electric gas turbine is designed to operate on fuel gases which have a heating value that will not vary more than plus or minus 10 percent from the normal value. Turbines which are required to operate on fuel gases that have heating values which vary over a range wider than plus or minus 10 percent will require special equipment for proper fuel control. Gradual changes in the heating value of a gas over the range of plus or minus 10 percent can be readily tolerated by the standard General Electric gas turbine; however, for those gas turbines which are designed for wider heating value variations, a maximum limit for gradual changes in heating value is imposed. This limit is plus or minus 20 percent. Any such variation in the heating value range should also include the variations which result from differences in the quantity and type of liquid and solid hydrocarbons carried in the gas.

Precaution are taken in the design of the gas turbine to prevent traps where gasolines and liquid petroleum gases could accumulate and slug suddenly into the fuel system, particularly during starting and particularly with wet gas.

COMPOSITION

No specific limit on the sulfur content is imposed except as noted for the exhaust-heat-recovery cycle and for the possibility of formation of alkali metal sulfate compounds. However, the concentration of hydrogen sulfide H_2S, sulfur dioxide SO_2, sulfur trioxide SO_3, total sulfur, and carbon dioxide CO_2, must be specified. It is recognized that these components may be corrosive at elevated temperatures with certain conditions and materials and, when in the presence of water, may also form a rather corrosive substance at ambient temperatures which could be injurious to the fuel-handling system. Elevated temperature corrosion may be avoided by a judicious

BEST AVAILABLE DOCUMENT

selection of turbine blading materials. Ambient temperature corrosion can be avoided in a like manner by keeping the gas hot enough to be dry and/or by providing a corrosion-resistant fuel-handling system.

FLAMMABILITY LIMITS

With most fuel gases, the fuel/air ratio of present General Electric gas turbines is such that at full load, the mixture, if uniform, is below the lower flammability limits. Combustion is accomplished by mixing all the fuel with part of the air in the flame zone of the combustor. No restriction is placed on the lower limit of flammability or the percentage of hydrogen in the fuel; however, the attendant dangers are recognized and precautions are taken in the design of the gas turbine and its fuel-control system to assure that no duct explosions will occur. Chapter 4, entitled "Inert Gas Safety", in the 1941 edition of "Fuel Flue Gases" published by the American Gas Association, gives a good discussion of the problems involved with flammability and supplies flammability limits for a number of gases at atmospheric temperature and pressure.

The fuel-flow range of a gas turbine from full to lightoff may be as high as 20 to 1, and the fuel-flow range at a given air flow may be 4 or 5 to 1. The ratio of the upper to lower limits of flammability of a fuel is an index of how well a fuel will perform in a combustor. General Electric has learned by experience that the minimum ratio for its standard combustors is 2.2:1. This maximum is approached and sometimes exceeded by low Btu gases, particularly those containing large amounts of inert gases.

BEST AVAILABLE DOCUMENT

II. SUMMARY

Activities of the Gas Fuel Study Team have included the following:

1. Review the effect of the fuel gas on past operation of the gas turbines and recommend upgrading of facilities to satisfy the minimum gas turbine requirements.

2. Collection of gas samples for analysis.

3. Review of operations with specific regard to fuel gas.

4. Inspection of the gas supply and field treating facilities at the Sui, Mari and Kandhkot fields.

5. Review of fuel gas supplier contract commitments on fuel gas quality.

6. Inspection of the fuel gas treatment and delivery systems at Guddu Station.

7. Review of the gas supply as currently delivered to the gas turbines for suitability and conformance with GE specification GEI-41040C.

BEST AVAILABLE DOCUMENT

8. Development of recommendations regarding improvement in facilities and their operation in regard to the delivery of fuel in accordance with the WAPDA/GE contract.

9. An estimate of the costs and schedule for implementation of recommendations will be developed for the final report.

10. Review of operating records related to the gas supply to the gas turbines operating at Guddu Station.

11. Inspection of gas turbine No.1 and 2 while they were dismantled for a hot gas path inspection on No.2 and a combustion inspection on No.1.

12. Collection of samples of material either blown down or mechanically removed from the station filters-separators and gas turbine strainers and fuel gas manifold.

13. Review of documents pertaining to the mode of operation prior to the completion of the mixing station.

BEST AVAILABLE DOCUMENT

14. Review of correspondence relative to liquids in fuel gas to the turbines.

15. The prepraration of a draft report in Pakistan, receive comments from principals and preparation of the final report.

BEST AVAILABLE DOCUMENT

III CONCLUSIONS

1. All of the gas fuels currently in use at the Guddu station are suitable for use in the GE MS-9001E gas turbines provided the treating and separation facilities now in place are closely supervised by the operators and they are operated in the manner intended, the installation of the fuel gas heating system is completed and the recommendations in this report are implemented.

2. The Sui gas delivered to the combined cycle plant during the first year of operation contained liquid hydrocarbons and a had high Wobbe index because of its low temperature and high heating value. These contributed to the gas turbine problems and some may recur if Sui gas is fired without the heater and implementation of the liquid removal equipment and upgraded treatment plant operation as recommended in this report.

3. There is some potential for deviation from the fuel gas compositions stated in the Lot 1A/1B purchase specification since the WAPDA contracts with the gas

BEST AVAILABLE COPY

suppliers do not commit the gas suppliers to any responsibility to deliver gas at any specified composition. It is generally not anticipated that this will occur, however, there was some evidence of variation in the composition of the samples taken by the Team.

4. A potential for delivering fuel gas with liquid mist or slugs and with solid contaminants exists for gas from all suppliers through the following means :

4.1 Sui gas delivered at 305 psig can contain liquid hydrocarbons.

4.2 There are no slug catchers or liquid scrubbers on the Sui gas treatment system at Guddu.

4.3 The Sui gas filter-separators are not equipped with automatic drain systems.

4.4 All filter-separators can be bypassed. (Temporary connection of Kandhkot filter-separator includes no provision by by-pass). The gas turbine fuel gas scrubbers cannot be by-passed.

BEST AVAILABLE COPY

4.5 Automatic drain systems from filter-separators or scrubbers are not always in operation.

4.6 There are no high liquid level alarms on any filter-separators at Guddu.

5. Data regarding the quality, heating value, composition or cleanliness of the gas that has been delivered to the gas turbines has been secured and appears in Section V-1, Fuel Gas Analyses

Quantitative evaluation indicated that the Mari and Kandhkot gas had minimal liquid hydrocarbons when received from the pipeline at Guddu. The Sui Gas at the delivery point does contain an unquantified amount of liquid hydrocarbons as indicated by analysis of gas samples and the Sui filter-separator liquid blowdown.

BEST AVAILABLE COPY

IV. RECOMMENDATIONS

IV-1 HIGH PRIORITY RECOMMENDATIONS

The following recommendations have been agreed upon by the Gas Fuel Study Team as having high priority. It is the opinion of the Team that all of these recommendations should be followed and that steps necessary for their implementation be taken immediately.

Although these recommendations merit a high priority, the gas turbines can be operated on Mari and Kandhkot gas with the equipment now installed. The recommendations made herein will improve both the availability and reliability of the systems and protect the gas turbine combustion systems from liquids, and enable reliable operation with all gas supplies (Mari, Kandhkot and Sui).

1.1 Complete the installation of the fuel gas heater in the fuel line to the gas turbines down-stream of the mixing station, which will provide 20 degrees of superheat or a minimum gas temperature of 120°F. This heater installation was planned prior to the activation of the Fuel Gas Study Team.

BEST AVAILABLE COPY

1.2 High efficiency liquid scrubbers with mist eliminator and automatic high capacity drain systems must be installed in the fuel gas line to the gas turbines between the mixing station and the heaters. The liquids should be discharged to the existing collection tank which is located a safe distance away from the generating equipment. The collection tank should be equipped with a high level alarm. The tank must be vented so that the vapors, which are heavier than air and highly flammable, are discharged so that they will dissipate safely away from equipment.

1.3 The gas turbine control systems should be modified so that the current high liquid level alarm on a unit scrubber will shutdown the gas turbine instantaneously in addition to alarming.

1.4 The burning of Sui gas in the gas turbines should be curtailed prior to the installations of the liquid-scrubber system between the mixing station and the fuel gas heaters to prevent hydrocarbon liquid from entering the gas turbine systems.

1.5 The gas chromatograph installation to monitor the composition and Wobbe index of the fuel gas to the

BEST AVAILABLE COPY

gas turbines and the three streams to the mixing station should be placed in service on a high priority basis and maintained in working order. The composition, specific gravity, heating value and Wobbe index of each gas should be entered into the daily log on an hourly basis until the computerized monitoring system in the central control room is commissioned.

1.6 A highly disciplined operation and maintenance program should be initiated immediately for the fuel gas treating facilities at Guddu. This must include blowdown of the liquid collection vessel on a regular basis with documentation of action and liquid level in liquid collection vessel prior to discharge.

1.7 All forms for the tabulation of instrument readings by shift personnel should include a prominent place for entry of any deviation from normal values. Daily records should be reviewed by technical supervisory personnel and particular attention given to deviations in instrument readings from values expected under normal operation.

BEST AVAILABLE COPY

1.8 All level controls in the fuel gas supply system should be activated.

1.9 High level alarms should be installed on all filter-separators.

1.10 The temporary drain tanks for the individual gas turbine scrubbers must be removed and the drains piped to the single large drain tank.

1.11 A fire screen per NFPA guidelines must be installated in the vent line from the large drain tank.

1.12 The design of the gas turbine combustion systems should be carefully evaluated relative to their ability to operate reliably with reasonable maintenance when fired on any one or any combination of the three gases conforming to the Lot 1A/1B bid specifications.

BEST AVAILABLE COPY

IV-2 ADDITIONAL RECOMMENDATIONS

Following are additional recommendations which the Fuel Gas Study Team considers worthy of serious consideration. It is strongly advised that these recommendations be implemented as soon as practical.

2.1 A regular program of instrument maintenance and calibration should be initiated.

2.2 The three lines supplying gas to Guddu should be cleaned with a brush scraper at least once per year. Necessary modifications to permit scraper operation should be made as soon as possible.

2.3 Squeegee scrapers or spheres should be run periodically in gas lines. The interval should be adjusted based on liquid recovered and ongoing gas analyses.

2.4 Provision must be made to receive liquid removed from the pipeline. This liquid will be a high vapor pressure mixture of hydrocarbons and the receiving system must accommodate the release of a large quantity of vapor when the pressure is released.

BEST AVAILABLE COPY

2.5 Installation of a high capacity liquid separator on the Sui Gas pipeline entering the Guddu Station (upstream of the existing filter-separators) would be a more satisfactory approach to the removal of liquids from the Sui Gas. This would provide satisfactory protection for the gas turbines and improve the operation of the Sui filters-separators and mixing station. (see Section V-5.1).

2.6 A study should be performed relative to upgrading and/or installing additional dehydrations capacity at Sui (see Section V-7.2).

2.7 A study should be performed relative to upgrading or replacing the existing filter-separators on Sui Gas at Guddu (see Section V-7.3).

2.8 A study should be performed relative to the upgrading of the dehydration facilities at Mari to reduce glycol losses (see Section V-7.4).

BEST AVAILABLE COPY

V. REPORT OF GAS FUEL STUDY

General

The outline for this Section, the Report of Gas Fuel Study Team corresponds to the scope of work as outlined in Paragraph 3.0 in the Charter which consists of:

This Section	Charter Paragraph	
V-1	3.1.1	Fuel Gas Analyses
V-2	3.1.2	Review of Fuel Gas Operating Data
V-3	3.1.3	Gas Field Treatment Facilities
V-4	3.1.4	Future Gas Field Plans
V-5	3.1.5	Gas Treatment Facilities at Guddu
V-6	3.1.6	General Electric Fuel Gas Specification Review
V-7	3.1.7	Additional Gas Treatment Facilities
V-8	3.1.8	Estimated Cost and Schedule for Fuel Gas Heater Liquid Scrubbers
V-9	---	Operations and Maintenance (An additional section not specifically identified in the Charter.)

BEST AVAILABLE COPY

V-1 FUEL GAS ANALYSES

1.1 General

A detailed analysis of available gas samples was performed. This included gas sample analyses obtained from various sources dating from June 10, 1983 to gas samples taken by the Team.

1.2 Gas Analyses Obtained

The gas sample analyses, including the specification gas provided to General Electric for the design of the gas turbines are as follows:

Table V-1.2-A consists of the original specification gas composition provided to General Electric for design.

Table V-1.2-B consists of four Sui gas test analyses made on June 11, 1983. These samples are compared with the specification gas provided to General Electric for design. These tests show that there is more heavier hydrocarbons (propane through hexanes plus) in Sui gas than indicated in the Lot 1A/1B

BEST AVAILABLE COPY

specifications to General Electric. The source of these analyses, the purpose and actual sample location are unknown. These analyses show that there are more heavy hydrocarbons in this sample than that shown on Table V-1.2-C.

Table V-1.2-C consists of analyses of two Sui gas samples obtained from GE-GT-2 on January 5, 1986. Three analyses were made from sample 1 and two analyses were made from sample 2. These sample analyses show that there is considerably more heavy hydrocarbons (propane through pentanes) in all of the analyses than there is in the Sui fuel gas specification provided to General Electric for the gas turbine design. It could not be determine precisely where these samples were taken but it is assumed that they were taken after the scrubbers. These samples were taken during January and were taken at a period when the Sui gas treatment facilities at Guddu were completely bypassed and raw untreated Sui gas passed through the temporary bypass pressure reducing station and was sent directly to the gas turbine feed gas scrubbers. Furthermore it was at this period that large quantities of liquid hydrocarbons were removed

BEST AVAILABLE COPY

from the scrubber and allowed to spill on the ground. There is however no indication that the quantity of liquids removed from the gas were much larger than that measured during January 1987 which is much less than the design liquid removal capacity of the scrubbers.

Table V-1.2-D consists of two gas samples obtained for the GE-GT No. 1 performance test. The fuel burned during March 1987 consisted of both Sui and Mari gases. The operating mode of the bypass station is such that only one gas at a time can be processed through the station. The two samples on V-1.2-D appear to be Mari gas (see Table V-1.2-A).

To fulfill the requirements of the Charter, gas samples were taken at the locations indicated in Table V-1.2-E.

Table V-1.2-F is a tabulation of the results of analyses of the gas samples taken by the Team. The analysis of the Mari gas and the first Kandhkot samples (2C and 1) indicate close conformance to the specification for analysis. since a full analysis of the Kandhkot gas was not made, three additional

BEST AVAILABLE COPY

samples were taken approximately one week later (2C-2, 2D-1 and 2D-2). These samples of the Sui gas samples were analyzed by the Hydrocarbon Development Institute of Pakistan [illegible] Karachi. The analysis of these samples shows a significant deviation from the specification and all previous analyses. These indicate a significant change in gas composition or possibly erroneous analyses.

Kandhkot samples analyzed while the Team was in Pakistan are in reasonable agreement with the analyses in the 1A/1B specifications. Analyses performed after the Teams departure indicate an increase in methane content of approximately 5 percent offset by a corresponding decrease in total inerts (nitrogen plus carbon dioxide).

No analyses of 2C samples were performed while the Team was in Pakistan. Analyses performed later indicate a decrease in methane content of approximately [illegible] percent from earlier analyses and from the analysis in the 1A/1B specifications. This decrease in methane content is largely offset by a corresponding increase in total inerts (nitrogen plus carbon dioxide).

BEST AVAILABLE COPY

It is unlikely that the composition of gas produced from Kandhkot and Sui would have changed this significantly. This leads the Team to view the more recent analysis with suspicion.

If the gas composition from the analysis of the Sui gas is correct, it is favorable for the gas turbine because the Wobbe index at 30°F is 41.13. This indicates a Wobbe index range between Mari gas at 100°F and Sui gas at 30°F of + or - 14.8% which the gas turbines can more easily accommodate than the + or - 21.4% for the specification gas compositions.

Analyses of Mari gas samples indicate that it is suitable for use in the General Electric gas turbines.

With minor exceptions it has the same composition as the last [illegible] specification gas used for design. An analysis of [illegible] samples of these gases as shown on Tables [illegible]-D and V-1.2-F indicate that the composition is relatively constant. There has been no indication that these gases vary over the range specified in the [illegible] 4 gas specifications.

BEST AVAILABLE COPY

Samples of Sui gas from various sources as shown in the Tables indicate that there are heavier hydrocarbons in the gas than indicated on the Lot 1A/1B specifications. The location of where several of the samples were obtained is not known.

1.3 Liquids in Sui Gas

A sample of the liquid blowdown from one of the Sui gas filters [illegible] was analyzed qualitatively by gas chromatography [illegible] General Electric. The spectrum of this sample [illegible] to the calibration standard of C_6 through $C_{[illegible]}$ [illegible] of Kerosene (bottom) is shown on Figure [illegible]. The analysis indicates qualitatively that the liquid [illegible] down from the filter contains heavy hydrocarbons having a distribution similar to kerosene, but with somewhat lower molecular weight.

This analysis [illegible] that the Sui gas entering the filter-separators carried liquids with a high vaporization temperature. Therefore, this would also imply that when the Sui gas was supplied to the gas turbines with the Sui on-site filter-separators bypassed (December 1985 through November 1986),

BEST AVAILABLE COPY

the gas contained the same range of entrained liquids. This [illegible] does not contain all of the possible [illegible] liquids because some of the lighter [illegible] liquids (C_5 and lighter) vaporized when the liquid was discharged to the atmosphere.

The analysis of this sample illustrates the apparent inability of [illegible] gas heaters to fully vaporize this gas [illegible] the temperature to 120°F if these liquid hydrocarbons are entrained. This indicates that [illegible] mechanical liquid removal equipment must be installed upstream of the heater.

1.4 Qualitative Evaluation

The qualitative evaluation indicated that the Mari and Kandhkot gas had minimal liquid hydrocarbons when received [illegible] pipeline at Guddu. The Sui gas does contain an [illegible] quantity of liquid hydrocarbons [illegible] by the gas and filter-separator liquid blowdown analyses.

BEST AVAILABLE DOCUMENT

The only procedure for obtaining a valid sample of a flowing stream is to obtain a sample of the gas at flowing conditions and a sample of the liquid (by means of a separator) at pipeline conditions and combine the two samples in the proper proportion. This could not be accomplished at Guddu. All of the samples obtained were only of the flowing gas. All hydrocarbons in the samples were in the vapor phase. The presence of liquid hydrocarbons which may have been condensed in the filter-separators was shown by the liquid from the last filter-separators, but there was no way to determine the relationship between liquid and vapor quantities.

It must be pointed out that any simple method of gas sampling after there has been opportunity for liquid condensation will not result in a true sample of the total stream.

BEST AVAILABLE DOCUMENT

TABLE V-1.2-A

FUEL GAS COMPOSITION PROVIDED TO GENERAL ELECTRIC FOR GAS TURBINE DESIGN

COMPONENT	[illegible] Volume Percent	SUI Volume Percent	KANDHKOT Volume Percent
Methane	[illegible]	88.52	79.2
Ethane	[illegible]	0.89	1.1
Propane	-	0.26	1.1
Butanes +	-	0.37	0.4
Nitrogen	[illegible]	2.46	16.6
Carbon Dioxide	[illegible]	7.35	2.5
H2S (Gr/100cf)	[illegible]	92.2	30.8
Mercaptan Sulfide (Gr/100cf)	-	3.8	1.2
Higher heating value, Btu/scf	[illegible]	930.8	862.9

BEST AVAILABLE DOCUMENT

[illegible] V-1.2-B

COMPARISON [illegible] SPECIFICATION GAS
[illegible]US
[illegible] GAS SAMPLES
[illegible] 1983)

COMPONENT	SUI Spec Gas Volume Percent	[illegible]	Test No.2 Volume Percent	Test No.3 Volume Percent	Test No.4 Volume Percent
Methane	88.51	[illegible]	88.82	88.73	88.95
Ethane	0.89	[illegible]	0.962	0.919	0.959
Propane	0.26	[illegible]	0.238	0.237	0.234
1-Butane	-	[illegible]	0.130	0.135	0.115
n-Butane	-	[illegible]	0.135	0.136	0.062
i-Pentane	-	[illegible]	0.026	0.025	0.025
n-Petane	-	[illegible]	0.083	0.081	0.043
Hexane	-	[illegible]	0.258	0.319	0.259
Nitrogen	2.46	[illegible]	3.754	3.855	3.759
Carbon Dioxide	7.35	[illegible]	5.593	5.580	5.596
H_2S (Gr/100cf)	92.2	-	-	-	-
Mercaptan Sulfide (Gr/100)	2.8	-	-	-	-
High Heating Value (kJ/Nm3)	34.740	[illegible]	35.210	35,260	35,090

BEST AVAILABLE DOCUMENT

TABLE V-1.2-C

SUI GAS SAMPLE 1 AND 2
TAKEN FROM GE GAS TURBINE NO. 2
ON JANUARY 5, 1986

[illegible]	[illegible]	GT-2 SAMPLE 1 ANALYSIS [illegible]	[illegible]	GT-2 SAMPLE 2 ANALYSIS [illegible]	[illegible]
C_6 Plus	.10935	.11202	.12047	.11960	.11960
Nitrogen	3.75222	3.72409	3.73746	3.96895	3.93769
Methane	88.85580	88.90520	88.98830	85.08590	86.07550
Carbon Dioxide	5.70935	5.69991	5.71415	6.32792	5.35958
Ethane	1.01921	1.01578	1.02071	.99835	1.00064
Unknown	.10257	.10299	.09798	.08997	.08099
Propane	.23409	.23353	.23398	.22395	.22348
i-Butane	.06303	.06304	.06387	.06021	.06096
n-Butane	.06354	.06316	.06299	.05911	.05875
i-Pentane	.03566	.06315	.03194	.03332	.03592
n-Pentane	.02510	.02408	.02543	.02274	.03159
Btu/scf	920.07	922.2	921.6	921.6	912.2
Sp Gr	.6383	.6383	.6384	.6450	.6452

BEST AVAILABLE DOCUMENT

TABLE V-1.2-D

GAS TURBINE NO. 3
PERFORMANCE TEST GAS SAMPLES

COMPONENT	PIPELINE SAMPLE NEAR [illegible] STATION SAMPLE NO. [illegible]2537 [illegible] PSI [illegible] [illegible]		DOWN STREAM SCRUBBER [illegible] PSI [illegible]	
	[illegible] TIME [illegible]	[illegible]	[illegible]	TIME [illegible]
	VOLUME PERCENT	VOLUME PERCENT	VOLUME PERCENT	VOLUME PERCENT
Nitrogen	22.42420	22.56205	22.97320	22.96363
Methane	72.84970	72.75550	72.36610	72.34520
Carbon Dioxide	4.41537	4.36632	4.35582	4.37617
Ethane	.31049	.31603	.30422	.31381
i-Pentane	.00000	.00009	.00063	.00111
n-Pentane	.00013	.00000	.00000	.00000
Btu/scf	730.9	730.1	726.0	726.0
Sp. Gr.	.6917	.6918	.6933	.6936

BEST AVAILABLE DOCUMENT

TABLE V-1.2-E

IDENTIFICATION OF GAS SAMPLES TAKEN BY TEAM

	LOCATION OF SAMPLE POINTS			
	SAMPLE NUMBER			
	Sari	Kandhkot	Sui	Turbines
Field Samples (at gas fields)				
Upstream of Dehydration Facilities	1A	-	3A	-
Downstrream of Dehydration Facilities	1B	-	-	-
Plant Samples (at Guddu)				
Pipeline Gas to Plant	1C	2C & 2C-2	3C	-
Downstream of Filter-Separators		2D, 2D-1 & 2D-2	3D	-
Fuel to Turbines (Header)	-	-	-	4A

BEST AVAILABLE DOCUMENT

TABLE V-1.2-F

ANALYSIS OF GAS SAMPLES TAKEN BY THE TEAM

	MARI GAS ANALYSES			KANDHKOT GAS ANALYSES					SUI GAS ANALYSES			MARI-KANDHKOT GAS ANALYSES
	1A	1B	1C	2A	2C-2	2D	2D-1	2D-2	3A	3C	3D	1A
COMPONENT	VOLUME PERCENT				VOLUME PERCENT				VOLUME PERCENT			VOLUME PERCENT
Methane	73.19	73.78	75.56	77.87	83.37	72.17	83.29	82.75	80.70	78.75	79.19	73.11
Ethane	0.19	0.21	0.23	1.16	0.69	1.16	0.65	0.56	[illegible]	[illegible]	[illegible]	0.23
Propane	-		-		0.23	-	[illegible]	[illegible]	[illegible]	[illegible]	[illegible]	
i-Butane	-				0.07	-	[illegible]	[illegible]	[illegible]	[illegible]	[illegible]	
n-Butane	-	-	-		0.052	-	0.052	0.052	[illegible]	[illegible]	[illegible]	-
i-Pentane	-	-	-	-	0.027	-	0.024	0.025	0.030	0.030	0.033	-
n-Pentane	-	-	-	-	0.014	-	0.013	0.013	0.016	0.011	0.016	-
Hexane	-	-	-	-	0.047	-	-	-	0.003	0.005	0.025	-
Carbon Dioxide	6.60	6.60	6.60	4.00	3.60	4.0	3.16	3.50	13.24	11.57	12.97	6.60
Nitrogen	20.03	20.44	20.51	16.96	12.06	17.67	12.50	12.58	3.54	7.37	5.39	20.00
Hydrogen Sulfide, PPM	-	-	-	-	200	-	150	236	100	300	150	-
Mercapton Sulfide, PPM	-	-	-	-	200	-	60	90	50	100	50	-
HHV, Btu/scf	-	-	-	-	865	-	-	861	835	837	835	-

BEST AVAILABLE DOCUMENT

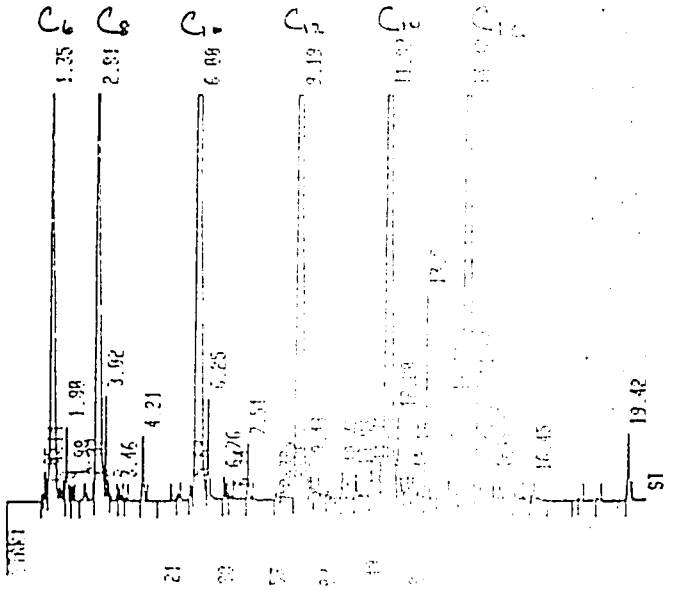

CALIBRATION STANDARD

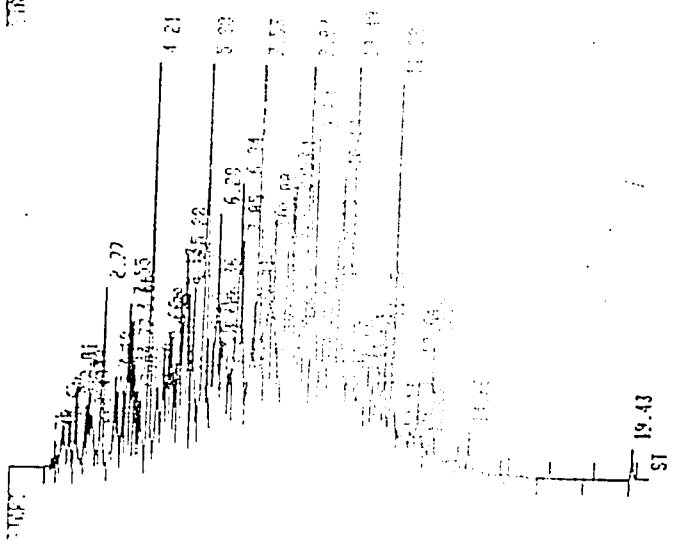

SUI GAS FILTER
LIQUID BLOWDOWN SAMPLE

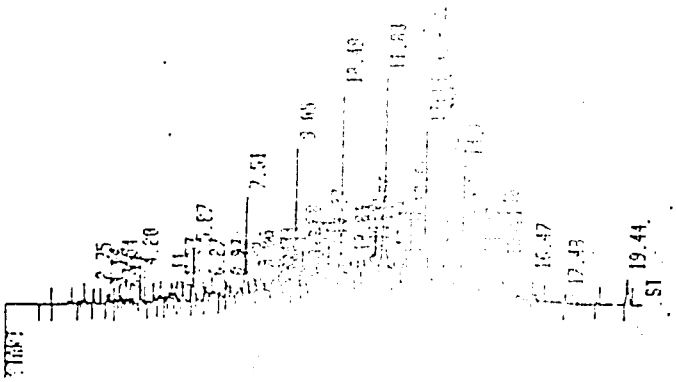

KEROSENE

FIGURE V-1.3-A

GAS CHROMATOGRAPH ANALYSIS OF
LIQUID SAMPLE FROM SUI GAS
FILTER SEPARATOR BLOWDOWN

BEST AVAILABLE DOCUMENT

V-2 REVIEW OF FUEL GAS OPERATING DATA

2.1 Review of Operations Data With Regard to the Fuel Gas

A substantial quantity of operations data has been scanned through but only that relevant to above subject matter has been collected for detailed study. This data has been culled from the various Registers Log-sheets and Files maintained by the operations staff of the Guddu Power Station.

WAPDA as a Buyer drew up Agreements with Sellers for the use of natural gas as fuel for gas turbines of the combined cycle complex, respectively with M/s Pakistan Petroleum Ltd. for Sui and Kandhkot and with Fauji Foundation for [illegible]. The contract for Sui gas is between WAPDA, Chief Engineer Thermal and M/s Pakistan Petroleum Ltd. This deed is in fact supplement to an earlier contract of the same nature transacted on December 5, 1974 [illegible] as principal contract for use of Sui natural gas [illegible] other power stations of WAPDA. The supplemental contract is dated December 1, 1975 meant for supplies to the steam station located at

BEST AVAILABLE DOCUMENT

Guddu site and later extended to supply gas turbines as well. The commercial terms are comparatively liberal and flexible as regards demands and their revision.

The gas contract for Mari supplies is with Fauji Foundation dated [illegible] April 1984, with a difference that this contract is exclusively for the 450 MW combined cycle [illegible] at Guddu, otherwise commercial terms are more or less similar. In this contract a separate Article [illegible] deals with the quality of natural gas indicating a range of composition and shows both liquid condensate and water as being negligible components.

The Kandhkot gas sale and purchase agreement is between WAPDA and M/S Pakistan Petroleum Ltd. (P.P.L.) dated December [illegible]. The supplies from this source commenced recently and its quality at the point of delivery is being checked for record. The current supplies do not contain either moisture (water vapor) or liquids hydrocarbons.

BEST AVAILABLE DOCUMENT

The contract documents contain commercial terms and conditions mainly and deal with the quality of gas in a casual manner. These are not being retained as supporting records.

The first and the most relevant data pertains to the record of the monthly consumption of gas beginning from the month of December 1985 up to the end of June 1987 along with the sources of supply is shown in Table V-2.1-A. This record shows that beginning from the start up of Unit No. 1 in December 1985, the supply was of the source alone, thereafter Mari gas supply joined [illegible] which continued till March 1987. From February 1986 [illegible] the gas mixing station was completed in November, 1986 fuel from only a single source, Sui or [illegible] could be supplied to the gas turbines via the temporary by-pass pressure reducing station. After [illegible] 1987 because of certain understandings between WAPDA and General Electric, Mari gas alone was used.

After commissioning of the treatment plants at the source and the receiving ends, and after the commissioning of Unit No. 4 gas turbine in June 1987 Kandhkot gas was mixed with Mari gas because Mari gas alone could not meet the demand requirements.

NOT AVAILABLE DOCUMENT

The next information relates to the total consumption of gas from November 1986 to June 1987 as shown on Table V-2.1-B. Since the sources of supply had been Sui and Mari fields during this period, therefore this part of information pertains to Sui and Mari gases only.

Table V-2.1-C gives the quantity of condensate collected each month, beginning from January 1987 to June 1987. This shows a quantity of 75 drums collected in the month of January 1987 and nil quantity from April 1987 to date. This practice was initiated in January 1987 and prior to it the condensate if any was disposed off. The quantity prior to this period can be projected against ambient temperatures for the previous months and monthly gas consumption from each field.

An exclusive record was maintained on Unit No. GE-GT-4 (G-10) with the object of observing the quantity of condensate collected over its period of operation beginning from 13th April 1987 up to the end of June 1987. Corresponding ambient temperature as well as the temperature at the scrubbers are also

BEST AVAILABLE DOCUMENT

noted. This record as shown on Table V-2.1-D shows that no condensate was collected during this period. The source of supply was Mari for the first two months and for the month of June it was a mix of Mari and Kandhkot. Thereafter there was no condensate observed.

The same type of record as shown on Table V-2.1-E was maintained for Unit No. GE-GT-1 (G-7) from June 8, 1987 to June 30, 1991.

The next data as shown on Tables V-2.1-F through V-2.1-I relates to the operating hours of each unit separately showing periods for which each unit tripped out as a forced outage through protective devices of the unit itself or was not a scheduled outage. This pro forma was prepared by General Electric and the information contained therein also contains the total MWH generated each month.

BEST AVAILABLE DOCUMENT

TABLE V-2.1-A

MONTH-WISE CONSUMPTION OF FUEL GAS
FOR
450 MW GAS TURBINES SINCE COMMISSIONING

SR. NO.	MONTH/YEAR	CONSUMPTION (MSCF)	GAS USED
01.	December 1985	386527	Sui
02.	January 1986	1052651	Sui
03.	February 1986	818992	(Sui or Mari)
04.	March 1986	2067896	(Sui or Mari)
05.	April 1986	2792939	(Sui or Mari)
06.	May 1986	2914200	(Sui or Mari)
07.	June 1986	2972143	(Sui or Mari)
08.	July 1986	2581187	(Sui or Mari)
09.	August 1986	540976	(Sui or Mari)
10.	September 1986	1142762	(Sui or Mari)
11.	October 1986	1420037	(Sui or Mari)
12.	November 1986	1379967	(Mari and Sui)
13.	December 1986	2773581	(Sui and Mari)
14.	January 1987	2919421	(Sui and Mari)
15.	February 1987	2348191	(Sui and Mari)
16.	March 1987	2324178	(Sui and Mari)
17.	April 1987	3196001	Mari
18.	May 1987	2959978	Mari
19.	June 1987	3618618	Mix (Mari plus Kandhkot)

BEST AVAILABLE DOCUMENT

TABLE V-2.1-B

MONTH-WISE CONSUMPTION OF FUEL GASES
FOR
45[illegible] COMBINED CYCLE PLANT
NOVEMBER 1986 TO JUNE 1987

MONTH/YEAR	CONSUMPTION (MCF)	GAS TYPE
November 1986	1375358	Mari
	4612	Sui
December 1986	1373749	Mari
	1399832	Sui
January 1987	1387203	Mari
	1533218	Sui
February 1987	1133054	Mari
	1215137	Sui
March 1987	1158361	Mari
	531985	Sui
April 1987	3196001	Mari
	Nil	Sui
May 1987	2959978	Mari
	Nil	Sui
June 1987	3060574	Mari
	Nil	Sui

BEST AVAILABLE DOCUMENT

TABLE V-2.1-C

CONDENSATE COLLECTED FROM FUEL GAS SCRUBBERS
FOR THE US COMBINED CYCLE PLANT

MONTH/YEAR	QUANTITY (DRUMS)	QUANTITY (US GALLONS)
January 1987	49	2058
February 1987	75	3150
March 1987	15	630
April 1987	NIL	NIL
May 1987	NIL	NIL
June 1987	NIL	NIL

* 1 drum = 42 US gallons

** The liquid collected from the scrubber is saturated at 305 psi and scrubber temperature. When flashed to atmospheric pressure a substantial amount of the original liquid (lighter hydrocarbons) from the scrubber is lost by evaporation.

BEST AVAILABLE DOCUMENT

TABLE V-2.1-D

TEMPERATURE FUEL GAS FROM SCRUBBER
VERSUS AMBIENT TEMPERATURE
[illegible]NIT-4 (G-10)
FROM APRIL [illegible] 1987 TO JUNE 30, 1987

DATE	TIME	GAS TEMPERATURE FROM SCRUBBER MIN/MAX: °C	AMBIENT TEMP °C	CONDENSATE COLLECTED
13.4.87	1500/[illegible]	[illegible]20	35/26	-
14.4.87	1600/[illegible]	[illegible]14	37/29	-
15.4.87	1600/[illegible]	[illegible]12	28/24	-
16.4.87	1500/[illegible]	[illegible]24	39/25	-
17.4.87	1400/[illegible]	[illegible]/22	40/26	-
19.4.87	1300/[illegible]	[illegible]/22	44/30	-
20.4.87	1700/[illegible]	[illegible]/26	40/28	-
21.4.87	1600/[illegible]	[illegible]/24	41/25	-
22.4.87	1700/[illegible]	22/23	42/24	-
23.4.87	1500/[illegible]	[illegible]/22	37/24	-
24.4.87	1500/[illegible]	[illegible]/22	39/20	-
25.4.87	1500/[illegible]	[illegible]/21	39/23	-
26.4.87	1600/[illegible]	[illegible]/20	40/21	-
27.4.87	1500/[illegible]	[illegible]/19	40/23	-
30.4.87	1600/[illegible]	[illegible]/24	42/26	-
01.5.87	1500/[illegible]	35/24	36/21	-
02.5.87	1500/[illegible]	[illegible]/20	34/23	-
03.5.87	1400/[illegible]	34/21	33/24	-
04.5.87	1500/[illegible]	[illegible]/20	37/25	-
05.5.87	1500/[illegible]	[illegible]/20	38/25	-
06.5.87	1500/[illegible]	[illegible]/22	40/30	-
07.5.87	1500/[illegible]	[illegible]/51	32/23	-
08.5.87	1600/[illegible]	35/20	35/28	-
09.5.87	1500/[illegible]	[illegible]/22	33/21	-
10.5.87	1500/[illegible]	[illegible]/23	36/25	-
11.5.87	1500/[illegible]	[illegible]/20	36/-	-
12.5.87	1500/[illegible]	30/25	36/25	-
13.5.87	1500/[illegible]	[illegible]/24	33/27	-
14.5.87	1500/[illegible]	[illegible]/25	35/24	-
15.5.87	1600/[illegible]	[illegible]/28	36/28	-
16.5.87	1500/[illegible]	38/24	36/27	-
17.5.87	1400/[illegible]	[illegible]/25	39/27	-
18.5.87	1500/[illegible]	[illegible]/24	41/29	-
19.5.87	1500/[illegible]	[illegible]/25	42/29	-
20.5.87	1400/[illegible]	[illegible]/25	40/27	-
21.5.87	1400/[illegible]	[illegible]/24	40/26	-
22.5.87	1400/[illegible]	[illegible]/24	33/27	-
23.5.87	1800/[illegible]	[illegible]/25	37/27	-
24.5.87	1900/[illegible]	[illegible]/24	36/31	-
25.5.87	1600/[illegible]	[illegible]/25	40/-	-
26.5.87	1500/[illegible]	[illegible]/25	40/32	-

BEST AVAILABLE DOCUMENT

T-2.1-D (continued)

27.5.87	1700/0400	39/26	40/32	-
28.5.87	1700/0500	37/24	38/31	-
29.5.87	1600/0500	40/24	41/31	-
30.5.87	1700/0400	35/22	35/25	-
31.5.87	1500/0300	33/24	37/28	-
01.6.87	1400/0300	39/30	40/33	-
02.6.87	1500/0300	42/28	43/80	-
03.6.87	1500/0300	40/27	41/31	-
04.6.87	1500/0300	42/27	41/30	-
05.6.87	1500/0300	47/27	44/NIL	-
06.6.87	1500/0300	48/28	45/31	-
07.6.87	1500/0300	38/25	-/-	-
08.6.87	1500/0100	38/29	43/33	-
09.6.87	1500/0400	47/35	4 /NIL	-
10.6.87	1500/0700	43/30	40/31	-
11.6.87	1500/0300	41/30	40/33	-
12.6.87	1900/0300	39/31	39/30	-
13.6.87	1600/0800	36/27	39/27	-
14.6.87	1400/0300	38/30	40/30	-
15.6.87	1400/0700	38/29	40/30	-
16.6.87	1300/0500	33/29	39/31	-
17.6.87	1400/0700	40/29	41/32	-
18.6.87	1700/0800	42/28	44/28	-
19.6.87	1400/0700	39/27	40/27	-
20.6.87	1600/0100	43/30	43/31	-
21.6.87	1500/0400	37/29	-/29	-
22.6.87	1500/0400	38/28	40/32	-
23.6.87	1300/0300	33/27	37/30	-
24.6.87	1200/0000	35/27	37/30	-
25.6.87	2000/0100	40/26	-/31	-
26.6.87	1700/0400	43/26	42/30	-
27.6.87	1600/0100	42/27	43/30	-
28.6.87	1600/0500	43/27	44/-	-
29.6.87	1600/0700	43/28	42/30	-
30.6.87	1700/0500	42/26	42/28	-

BEST AVAILABLE DOCUMENT

TABLE V-2.1-E

TEMPERATURE FUEL GAS FROM SCRUBBER
VERSUS AMBIENT TEMPERATURE
FOR GF-GT-1 (G-7)
FROM [illegible] TO JUNE 30, 1987

DATE	TIME	C[illegible] TEMPERATURE [illegible] POWER [illegible] MIN	AMBIENT TEMP	CONDENSATE COLLECTED
08.6.87	1500/2300	[illegible] 32 C	42C/35C	-
09.6.87	1500/0700	[illegible] 30 C	40C/30C	-
10.6.87	1500/0400	[illegible] 30 C	40C/30C	-
11.6.87	2200/0400	[illegible] 30 C	35C/32C	-
12.6.87	2200/0500	[illegible] 30 C	31C/30C	-
13.6.87	1400/1000	[illegible] 29 C	38C/31C	-
14.6.87	1500/1100	[illegible] 35 C	41C/36C	-
15.6.87	1300/0600	[illegible] 33 C	38C/30C	-
16.6.87	1300/0400	[illegible] 33 C	37C/31C	-
17.6.87	1700/0700	[illegible] 33 C	41C/32C	-
18.6.87	1500/0600	[illegible] 43 C	43C/31C	-
19.6.87	1600/0700	[illegible] 25 C	42C/28C	-
20.6.87	2200/0800	[illegible] 27 C	33C/29C	-
21.6.87	1500/0100	[illegible] 29 C	36C/31C	-
22.6.87	1600/0100	[illegible] 29 C	40C/33C	-
23.6.87	1700/0800	[illegible] 28 C	39C/30C	-
24.6.87	1700/0400	[illegible] 29 C	40C/30C	-
25.6.87	1700/0600	[illegible] 29 C	40C/30C	-
26.6.87	1600/0500	[illegible] 29 C	42C/30C	-
27.6.87	1400/0400	[illegible] 29 C	41C/30C	-
28.6.87	1400/0700	[illegible] 35 C	42C/30C	-
29.6.87	1300/0100	[illegible] 38 C	38C/33C	-
30.6.87	1600/0300	[illegible] 38 C	41C/30C	-

BEST AVAILABLE DOCUMENT

TABLE - [illegible]

GE-[illegible] [illegible] RECORD

[illegible]

COMMERCIAL [illegible] JUNE 1987

MONTH	OPERATING HRS BASE	OPERATING HRS PEAK	[illegible]	[illegible] NUMBER	FORCED OUTAGE EMERGENCY TRIPS	FORCED OUTAGE DURATION HOURS MIN	FORCED OUTAGE DURATION HOURS MAX	GENERATION (MWH)
Dec,1985	226.7	NIL	[illegible]	NIL	2	8	30	26509
Jan,1986	530.5	NIL	[illegible]	NIL	5	17	38	55169
Feb,1986	651.5	NIL	[illegible]	NIL	2	1	34	60396
Mar,1986	494.65	NIL	[illegible]	1	2	10	37	45159
Apr,1986	551.3	NIL	[illegible]	1	2	4	22	44861
May,1986	513.4	NIL	[illegible]	NIL	1	2	59	42270
Jun,1986	373.1	NIL	[illegible]	NIL	7	70	3	26327
Jul,1986	460.7	NIL	[illegible]	NIL	NIL	NIL	NIL	33863
Aug,1986	140.5	NIL	[illegible]	10	1	0	34	9886
Sep,1986	228.0	NIL	[illegible]	3	2	3	21	22836
Oct,1986	287.4	NIL	[illegible]	6	2	11	56	23601
Nov,1986	-	NIL	NIL	NIL	NIL	NIL	NIL	-
Dec,1986	-	NIL	NIL	NIL	NIL	NIL	NIL	-
Jan,1987	438.14	NIL	[illegible]	NIL	NIL	NIL	NIL	40424
Feb,1987	613.31	NIL	[illegible]	NIL	3	10	30	43108
Mar,1987	61.42	NIL	NIL	NIL	1	Damage of starting motor & Torque converter --2303-55--		6040
Apr,1987	NIL	NIL	NIL	NIL	-			-
May,1987	NIL	NIL	NIL	NIL	-			-
Jun,1987	538.26	NIL	4	NIL	-			47800

BEST AVAILABLE DOCUMENT

TABLE-[illegible]

GE-GT-2 PERFORMANCE RECORD

[illegible]

COMMISSIONING [illegible] JUNE 1987

MONTH	OPERATING HRS BASE	OPERATING HRS PEAK	[illegible]	[illegible]	FORCED OUTAGE EMERGENCY TRIPS	FORCED OUTAGE DURATION HOURS MIN	FORCED OUTAGE DURATION HOURS MAX	GENERATION (MWH)
Dec,1985	-	NIL	29	NIL	NIL	NIL	NIL	-
Jan,1986	-	NIL	15	NIL	NIL	NIL	NIL	26095
Feb,1986	-	NIL	1	NIL	NIL	NIL	NIL	2634
Mar,1986	-	NIL	21	NIL	NIL	NIL	NIL	27288
Apr,1986	572.1	NIL	4	NIL	1	14	28	48664
May,1986	683.7	NIL	5	NIL	1	0	21	52925
Jun,1986	631.4	NIL	9	NIL	2	1	26	5174
Jul,1986	467.9	NIL	15	NIL	1	13	10	35603
Aug,1986	127.5	NIL	21	10	NIL	NIL	NIL	9575
Sep,1986	263.4	NIL	25	6	2	17	0	19425
Oct,1986	370.5	NIL	23	5	5	34	54	30528
Nov,1986	470.8	NIL	10	2	4	9	5	27150
Dec,1986	740.63	NIL	3	NIL	NIL	NIL	NIL	67773
Jan,1987	560.45	NIL	7	2	NIL	NIL	NIL	47628
Feb,1987	664.29	NIL	3	NIL	2	9	45	47514
Mar,1987	697.26	NIL	8	NIL	5	10	46	70552
Apr,1987	719.1	NIL	1	NIL	1	1	0	66905
May,1987	729.8	NIL	1	NIL	1	1	5	60960
Jun,1987	692.11	NIL	3	NIL	1	0	51	45791

BEST AVAILABLE DOCUMENT

TABLE- [illegible]

GE-GT-3 [illegible] RECORD

[illegible]

COMMISSIONING [illegible] 1987

MONTH	OPERATING HRS BASE	OPERATING HRS PEAK	[illegible] SYNCHRONISING	[illegible] TRIPS	FORCED OUTAGE EMERGENCY TRIPS	FORCED OUTAGE DURATION HOURS MIN	FORCED OUTAGE DURATION HOURS MAX	GENERATION (MWH)
Dec,1985	-	NIL	-	-	-	-	-	-
Jan,1986	-	NIL	-	-	-	-	-	-
Feb,1986	-	NIL	31	NIL	-	-	-	238
Mar,1986	582.5	NIL	11	NIL	3	28	22	59280
Apr,1986	463.5	NIL	6	NIL	2	4	40	38524
May,1986	415.9	NIL	8	NIL	2	2	58	32357
Jun,1986	577.9	NIL	9	NIL	2	2	06	45434
Jul,1986	493.6	NIL	12	1	2	1	54	42664
Aug,1986	115.8	NIL	22	8	1	1	13	9017
Sep,1986	279.8	NIL	20	6	1	1	3	22697
Oct,1986	240.1	NIL	26	6	3	30	56	19814
Nov,1986	391.8	NIL	9	3	2	3	42	25577
Dec,1986	666.18	NIL	NIL	NIL	6	2	48	54773
Jan,1987	638.51	NIL	10	NIL	NIL	NIL	NIL	63944
Feb,1987	167.36	NIL	1	NIL	NIL	NIL	NIL	12653
Mar,1987	141.50	NIL	1	NIL	NIL	NIL	NIL	13612
Apr,1987	684.12	NIL	4	NIL	1	10	3	65758
May,1987	664.58	NIL	5	NIL	3	111	35	55587
Jun,1987	717.47	NIL	2	NIL	2	2	3	64924

BEST AVAILABLE DOCUMENT

TABLE - V-[illegible]

GE-G[illegible]

[illegible]

COMMISSI[illegible] 1987

MONTH	OPERATING HRS BASE	OPERATING HRS PEAK	[illegible] SYNCHRONIZ[illegible]	[illegible]	FORCED OUTAGE EMERGENCY TRIPS	FORCED OUTAGE DURATION HOURS MIN	FORCED OUTAGE DURATION HOURS MAX	GENERATION (MWH)
ec,1985	NIL	NIL	NIL	NIL	NIL	NIL	NIL	-
an,1986	NIL	NIL	NIL	NIL	NIL	NIL	NIL	-
eb,1986	NIL	NIL	NIL	NIL	NIL	NIL	NIL	-
ar,1986	NIL	NIL	46	NIL	NIL	NIL	NIL	1804
pr,1986	386	NIL	2	NIL	2	10	11	37743
ay,1986	619.7	NIL	6	NIL	1	13	54	48757
un,1986	660.6	NIL	5	NIL	3	2	55	58268
ul,1986	521.4	NIL	9	NIL	NIL	NIL	NIL	42183
ug,1986	53.3	NIL	11	1	1	21	38	3873
ep,1986	36.7	NIL	5	NIL	NIL	NIL	NIL	3510
ct,1986	217.5	NIL	60	6	3	1	24	17236
ov,1986	378.8	NIL	24	4	3	5	09	21848
ec,1986	700.63	NIL	6	NIL	NIL	NIL	NIL	67221
an,1987	531.97	NIL	5	NIL	NIL	NIL	NIL	50178
eb,1987	648.98	NIL	6	NIL	NIL	NIL	NIL	47597
ar,1987	651.42	NIL	12	NIL	2	47	58	57544
pr,1987	694.04	NIL	3	NIL	1	5	07	67773
ay,1987	736.58	NIL	4	NIL	4	52	35	63228
un,1987	720.00	NIL	NIL	NIL	NIL	NIL	NIL	56414

BEST AVAILABLE DOCUMENT

V-3 GAS FIELD TREATMENT FACILITIES

3.1 General

Facilities are usually installed at the origin of gas pipelines to perform one or more of the following functions

1. To remove free water and reduce the water vapor content of the gas to such a level that no condensation will occur at pressures and temperatures to be encountered in the pipeline

2. To perform the same function relative to liquid hydrocarbons

3. To remove impurities which either reduce the heating value of the gas or are corrosive to the pipeline and equipment

It is almost always advisable to perform at least the first process listed, dehydration.

BEST AVAILABLE DOCUMENT

Removal of inert ingredients (e.g., nitrogen), is seldom justified, except to reduce the cost of transportation in large and long pipelines.

Most corrosive gases (carbon dioxide and hydrogen sulfide), are not harmful if free water is not present; consequently, their removal is not necessary if dehydration is effective. In all of the fields supplying Guddu dehydration facilities are in place and operating. Liquid hydrocarbons are removed to a limited extent. Inert and corrosive gases are not removed.

It is essential to the operation of gas turbines that the fuel gas be free of liquid hydrocarbons, especially that there be no significant variations in liquid hydrocarbon content. This can be ensured by one of the following plans:

3.1.1 <u>Plan A</u>

Processing gas to the inlet to pipeline to ensure a hydrocarbon (and water dew point well below any possible pipeline temperature.

BEST AVAILABLE DOCUMENT

3.1.2. Plan B

Intercepting all liquid slugs arriving in the pipelines to the plant before filter-separation or pressure reduction.

3.1.3 Plan C

Intercepting all liquid slugs in the fuel gas piping downstream of filter-separation, pressure reduction and mixing but upstream of the gas heating station.

3.1.4 Plan D

Intercepting liquid slugs from the gas to the turbines, downstream of the heating station.

From an overall consideration, by far the most satisfactory solution will be Plan A, the treatment of all gas to pipeline quality at the gas fields. This will not only eliminate the occurence of liquid hydrocarbon in the fuel to the turbines, but will improve operation of the pipelines.

BEST AVAILABLE DOCUMENT

Implementation of this plan will be the most expensive as it will entail substantial installation and operating cost at each gas field. Not only will it be necessary to remove all liquid hydrocarbons and free water from the gas, it will be necessary to lower the hydrocarbon and water dew points to below minimum pipeline temperature. This will require equipment for the extraction of liquid hydrocarbons as well as dehydration equipment for the reduction of water vapor. Equipment for water vapor reduction is in operation at all three gas fields at this time in the form of glycol dehydration.

Adoption of Plan B, removal of liquids at the entrance to the plant prior to any pressure reduction or present filter-separation will be very effective and will also be expensive.

High capacity liquid removal separators, as distinguished from filter-separation, will be required on each entering gas pipeline. This equipment must be sized for the total capacity of the pipeline and must be designed for the pipeline operating pressure.

BEST AVAILABLE DOCUMENT

If this type of separation equipment is installed, there may be small quantities of liquid hydrocarbons formed in the plant piping after pressure reduction and cooling but it will be in the form of fine mist. There will be little opportunity for accumulation of condensed hydrocarbons in the plant piping.

Plan C, the removal of liquid hydrocarbons immediately upstream of the fuel gas heaters will insure the arrival of dry super-heated fuel gas to the gas turbines.

This liquid removal equipment has been specified for the total fuel requirements for six gas turbines at the turbine supply pressure, 300 to 350 psig.

Plan D, removal of liquids immediately upstream of the gas turbines, will be less effective than Plan C. Any appreciable slugs of liquid hydrocarbon reaching the fuel gas heater will pass through and be only partially vaporized. The gas downstream of the heater will then be re-saturated.

BEST AVAILABLE DOCUMENT

The Gas Fuel Study Team considers the most satisfactory of the four plans to be Plan C, the removal of entrained liquids immediately upstream of the fuel gas heaters. (See V-7.1 Fuel Gas Heater Liquid Scrubbers) for specifications.

3.2 Sui Gas Field Treatment Facilities

The facilities at Sui gas field in which the gas to Guddu is treated were visited on Wednesday 29 July.

When blowing out the sample connection, a heavy viscous black gummy substance was ejected. This material appears identical to deposits found in the Y strainers on the gas turbines at Guddu. It has since been identified as triethylene glycol and heavy hydrocarbons , up to and including C_{12}.

Various gas analyses, some dated 1983, some dated 1986, indicate that gas very rich in heavy hydrocarbons (butanes and heavier) is produced at Sui. Sui gas for Guddu is not processed prior to delivery to the pipeline. After entering the pipeline, the gas is dehydrated in two parallel

BEST AVAILABLE DOCUMENT

dehydration units each rated at 51 mmscfd located at Sui near the origin of the pipeline to Guddu,. Total flow through these units has been as much as 140 mmscfd. Overload operation of the units will result in less effective water removal and in glycol carryover from the glycol contact tower.

The dehydration units are conventional in design. Each glycol contact tower contains a gas scrubber section below the bottom glycol tray, eight bubble cap contact trays, a mist extractor above the glycol feed tray and a gas/glycol heat exchanger to cool the incoming lean glycol stream.

Glycol is regenerated in a horizontal boiler with submerged firetube. Surge capacity for glycol is provided by an extension of the boiler shell. Regenerated glycol is cooled first by heat exchange with wet glycol from the contact tower and further in a heat exchanger by the gas stream leaving the contact tower. Regeneration is at 350°F to 380°F.

Two filter-separators in parallel filter the gas before it enters the glycol contact towers and two identical units filter the dehydrated gas. This installation should remove substantially all of the glycol carryover under design load conditions.

BEST AVAILABLE DOCUMENT

Dehydrated Sui gas enters the pipeline at approximately 900 psig at a temperature of 100°F or higher. In the pipeline to Guddu, the pressure drops due to the energy to sustain flow. Since much of the pipeline is above ground or in earth saturated with water, the temperature of the gas probably approaches the 24 hour average ambient temperature. In summer, this may be 100°F, and in winter as low as 40°F. As the temperature falls below the hydrocarbon dewpoint of the gas condensation of the heavier hydrocarbons will occur. In addition, some liquid may be carried over from the overloaded dehydrators. There is also a distinct possibility of the loss of glycol to the effluent gas when the units are overloaded.

The profile of the pipeline from Sui to GUDDU is essentially level since there are no significant hills or valleys. The nature of the supports and occasional crossing of roads and streams results in sags and pockets in the line. Some sags are less than one pipe diameter, some pockets are several feet. Condensed liquid will collect in these low spots, the amount depending to some extent on gas velocity.

At 140 mmscfd, velocity in the pipeline will be less than 20ft/sec, at 100 mmscfd, velocity will be less than 14ft/sec. Neither of these velocities is sufficient to ensure that liquids will be carried along with the gas

BEST AVAILABLE DOCUMENT

stream. Instead, liquid will accumulate in low spots in the pipeline. The accumulation of liquid will decrease the flow area of the gas and therefore increase the gas velocity. At some rate of flow, the gas velocity will be sufficient to pick up liquid from low spots and carry it down the pipeline. When this occurs, the liquid tends to travel in waves. A large wave or slug of liquid will act as a piston, picking up more liquid from low spots until a slug of some size forms. Experience on other pipelines carrying wet gas has shown that slugs of several hundred barrels can, and sometimes do, form and are carried along to the end of the pipeline. There is no firm evidence however, that such a large slug of liquid ever entered the Guddu facility ever though there is a considerable amount of liquids in the Sui gas during the colder winter months.

The pipeline originates at some distance from the final dehydration facilities. The piping at the dehydration unit is so arranged that a scraper launched at the origin of the line can be passed thru the facility by opening a bypass valve and bypassing the dehydration units for a brief interval.

BEST AVAILABLE DOCUMENT

3.3 Mari Gas Field Treatment Facilities

Facilities at Mari gas field processing gas prior to admission to the pipeline to Guddu were visited on Friday 31 July.

Final field separation at Mari occurs before the metering station. After metering, the gas enters the glycol contact tower of the dehydration unit. This is an 8-tray tower without a gas scrubber section below the bottom glycol tray. Wet glycol is removed from the bottom of the tower.

The glycol regenerator at Mari is a more sophisticated unit than the Sui units and should produce a higher concentration of lean glycol which, in turn, should produce a drier (water) gas than the Sui unit.

There are no filter-separators downstream of the glycol contact tower. This could result in the carryover of an appreciable quantity of glycol, especially when the unit is overloaded or when a process upset occurs.

BEST AVAILABLE DOCUMENT

3.4 Kandhkot Gas Field Treatment Facilities

Facilities at Kandhkot gas field in which the gas to Guddu is treated were visited on Saturday 1 August.

Field gas entering the Kandhkot facility passes through a slug catcher before entering the dehydration facilities.

Dehydration is in two identical glycol dehydration units each rated at 30 mmscfd. Each glycol contact tower incorporates a gas scrubber section below the bottom glycol tray. There are bubble cap trays and a mist extractor to remove entrained liquid from the effluent gas.

The facility contains three filter-separators. One of these units filters the gas before it enters the glycol contactor. One unit filters the gas after it leaves the contactor. The third unit serves as a spare and can be substituted for either of the others. Metering is by an orifice meter following final processing.

The pipeline to Guddu originates approximately a thousand yards from the dehydration facility. The gate was locked on the scraper launcher at the origin of the pipeline so no close inspection was made.

BEST AVAILABLE DOCUMENT

V-4 FUTURE GAS FIELD PLANS

4.1 Future of Gas Supply from Sui

There are two ministries in Federal Government that negotiate demands for fuel oil and gas supplies for the purpose of generating electric power, i.e. the Ministry of Petroleum and Natural Resources, and the Ministry of Water and Power. WAPDA falls under direct control of the latter ministry. All its demands for fuel are routed through this ministry, for subsequent adjustment between power generation and industry.

From the present trend of the supply and demand position it appears that the emphasis has been on making the maximum use of residual oil and curtailing supplies from Sui sources to the extent possible. Presently this curtailment has affected the supplies to most of the steam stations of WAPDA that are faced with the problem of transporting fuel oil by train tankers, decanting them and processing it for firing the boilers. Guddu Station has however remained exempted for this restraint, although these units are equipped for conversion at short notice. Both the steam boilers and gas turbines are capable of burning oil as well as gas.

BEST AVAILABLE DOCUMENT

There is every reason to expect that the gas supply from Sui will be further reduced, but the level to which this will finally be settled must remain a matter of negotiations between WAPDA and the concerned ministries in Islamabad. Complete cessation of supplies from Sui is not likely in the foreseeable future.

The Planning Commission No. 1 Proforma that WAPDA has prepared and submitted to the planning commission in respect of additional 300 MW Combined Cycle Power Station (Units 5 and 6) units at Guddu has indicated that the fuel gas for the units will be made available mainly from Kandhkot while the supplies from Mari and Sui will also be available. The strength of such a statement is obviously based on assurances and commitment from the Ministry concerned.

Pakistan Petroleum Ltd. is managing the Operations of the Sui fields and the Khadhkot fields. This organization is therefore well informed of the planning strategy of the Federal Government and receives direct instructions from them. In this context it has been gathered that laying of additional pipe lines to satisfy the demands of power generation and the upcomming industries in this are is now

BEST AVAILABLE DOCUMENT

under active implementation and receiving top priority. There is therefore no doubt that by the time the second phase of the combined cycle (Units 5 and 6) comes through the additional capability of the gas transmission will have been fully commissioned.

The present governments fivepoint development strategy which is due for completion by the end of 1990, takes into its fold development of power so that there is no load shedding in future. In this regard special attention is given to areas of Sind Province that have remained under development so far. There is a regular assessment of the progress carried out by the government agencies and it is not likely that such an important infra-structural item like the laying of additional pipelines would go by default, on which the economy of the whole country depends.

BEST AVAILABLE DOCUMENT

V-5 GAS TREATMENT FACILITIES AT GUDDU

Gas from the three sources of supply are processed at Guddu in a similar manner but with a few exceptions.

5.1 Sui Gas Treatment Facilities

All of the Sui gas that enters the Guddu Power Plant is presently treated or distributed from a single facility operated by Sui personnel. The Sui gas first passes through two parallel banks of two filter-separators each. These two banks can be isolated but at present they feed into a common header. The valving is such that the filtered gas can be routed to the mixing station or to the steam plant pressure reducing station. Currently all Sui gas is routed to the mixing station.

Two of the filter-separator units have no liquid collecting chamber, no gage glass or level control device. Two units have a lower chamber for liquid accumulation equipped with gage glass but no level control device. Routine blowdown is reported to be once or twice weekly. Since there is a gage glass in two of these units, it is assumed that the operator monitors the liquid level and blows down all four units whenever liquid has accumulated in the two with gage glasses.

BEST AVAILABLE DOCUMENT

In the early days of operation of the gas turbines, these filter-separators were bypassed and Sui gas was fed directly to the gas turbine installation via the pressure reducing station. This mode of operation continued for about a year whenever Sui gas was burned in the gas turbines.

Even with the current Sui gas treatment facilities at Guddu the turbine installation probably could receive slugs of liquid too large to be handled by the Peerless scrubbers on the individual gas turbines without modifications to the on-site Sui gas treatment facilities.

The installation and the program of operation and maintenance are totally inadequate if Sui gas is to be supplied to the gas turbines without further processing for liquid removal and the upgrading of the controls on the existing Sui filter-separators.

5.2 Mari and Kandhkot Gas Treatment Facilities

5.2.1 General:

The original Kandhkot treatment station consisted of a coalescer in series with three filter-separators. The original Mari gas line had no treating facilities.

BEST AVAILABLE DOCUMENT

As a temporary measure two of the Kandhkot filters were utilized to treat the Mari gas until the new Mari filter-separators could be installed.

As a result of this temporary arrangement both gases were treated. It was, however, necessary to reduce the Mari gas pressure from about 900 psig to 450 psig because of the lower design pressure of the Kandhkot filter-separators. This was beneficial in that by reducing the pressure, heavy hydrocarbons, if present, would be partially condensed and removed.

5.2.2 Mari Treatment Facilities

Mari gas is being fed directly from the gas pipeline to one of two parallel 100 percent filter-separators at the full line pressure of 900 psig.

Each of the filter-separator units is equipped with a two compartment lower drum for the collection of accumulated liquids. Each compartment is equipped with gage glass, liquid level controller operating a dump valve, and a manual drain valve.

BEST AVAILABLE DOCUMENT

One of the Mari filters was opened for inspection. In general the unit was not very dirty. Objects such as a piece of metal 1-1/2 x 2-/12 inches were found, stones about 3/4 inch in diameter, sand, gravel and rust scale in a wet sludge liquid were recovered. The liquid was completely soluble in water. The conclusion is that it is glycol. The Team was informed that the glycol losses at the Mari dehydration station were excessive (see Appendix 2). No traces of hydrocarbons were detected. The General Electric Team member obtained samples of analysis.

Team members observed the washing of the filter with a fire hose. The three valves on the bottom drain lines were opened. Initially wash water flowed out onto the ground below the filter from a single valve and out to the discharge pit. Shortly thereafter the water flow stopped in all three. This indicated that the valves and pipelines were plugged with fine sand and other solid material such as rust scale. The lower chamber was subsequently cleaned. All drains flowed freely.

BEST AVAILABLE DOCUMENT

Mari gas from the filter-separators passes directly, without further processing to the mixing station. It appears that they are no hydrocarbon liquids in the Mari gas.

The existing Mari gas treating system represents the final design. The Kandhkot gas treating system is currently being converted back to its original design. This consists of a coalescer in series with the three parallel filter-separators.

5.2.3 Kandhkot Treatment Facilities

Kandhkot gas was introduced into the gas turbines for the first time in June of 1987. It represented about 15 percent of the total gas with the balance Mari gas.

No liquids were observed in the level gages or drain lines despite the fact that the block valves on the liquid level controllers of the coalescer and filter-separators were closed. It appears that there are no liquid hydrocarbons in the Kandhkot gas.

BEST AVAILABLE DOCUMENT

Gas passes directly from the single Kandhkot filter-separator, which cannot be by-passed as currently connected, to the mixing station. This will not be the case after the system has been converted back to its original design.

5.3 Mixing Station

The mixing station is designed to maintain two gas fuel headers at the desired pressure. One of the headers feeds the four gas turbines and will ultimately supply six gas turbines when the plant expansion is completed. The other main header supplies the steam plant. The header supplying the gas turbines is normally set at 350 psig. and the steam plant header at 200 psig. Gas enters the mixing station headers through six control valves, two on each gas supply line.

Pressure on each header can be controlled by operating the control valves manually or in automatic control mode.

Flow of gas from one source can be maintained by manually operating the two pressure control valves on that stream to obtain the desired reading on the flow meter for that source

BEST AVAILABLE DOCUMENT

and operating the control valves on the other two gas supplies in automatic mode. This will maintain flow from one source; fluctuations in demand will be supplied from the other two sources on pressure control.

There are no provisions for direct flow control and no provision for measuring gas flow from each of the three gas supply headers to either of the mixing stations nor is there any way to determined the actual gas flow rate to either the steam plant or the gas turbines.

There is a specific gravity indicator on each gas line to the mixing station. Some difficulty has been experienced in keeping these instruments operational.

5.4 Gas Turbine Fuel Gas Scrubbers

5.4.1 General

The vertical Peerless scrubbers which are located on the fuel gas line to each turbine were installed by General Electric. Their primary functions is to remove small quantities of liquid that may be in the fuel gas resulting from modest temperature reductions

BEST AVAILABLE DOCUMENT

in the gas or as a result of pressure reduction. Their design, however, is such that they are capable of removing relatively large quantities of liquids from the fuel gas and still comply with the design specification for liquids in the fuel gas to the gas turbines. This specification and performance guarantees which follow in Section 5.4.2 were provided by Peerless Manufacturing Company (refer to Appendix 3).

5.4.2 Specifications and Performance Guarantees

The particulate and liquid removal performance guarantees of each Peerless scrubber based on a design gas flow rate of 25,000,000 scf/day includes:

- Particles 10 microns and larger in size - 100 percent efficiency (percent removal)

- The exit gas will contain less than 0.1 gallons per million standard cubic feet of gas for:

  a. maximum liquid loading @ maximum flow = 64 gpm
  b. maximum liquid loading @ normal flow = 70 gpm
  c. maximum liquid loading @ minimum flow = 72 gpm

BEST AVAILABLE DOCUMENT

The above liquid rates are based on a steady gas and liquid flow rate and not as slugging or pulsing conditions. the vendor estimates that there would be a ninety percent or better liquid removal rate for entering slugs up to approximately 200 gpm. As the amount of liquid exceeds 200 gpm the performance of the unit would slowly start declining.

The above refers to liquid removal rates in the multiclone section of the scrubber.

Each of the scrubbers is capable of removing over 2000 barrels per day of liquids while meeting the specifications for liquid in the gas.

The liquid dump system provided has a flow rate of approximately 45 gpm at a 300 psi differential pressure.

The liquid discharge rate for a single separator is limited to about 1500 barrels per day of liquids as per vendor specifications. This, however, may be reduced somewhat by the choke coil effect of discharge piping upstream and downstream of the bottoms liquid discharge valve.

AVAILABLE DOCUMENT

There are no records available pertaining to the amount of liquids removed from the scrubbers when the bypass pressure reducing station was in operation. The highest recorded amount of liquid removed was 75 barrels during the month of February 1987, when the total electric power generated was slightly more than 150,000 mWh. This was the total amount of liquid removed for all of the scrubbers on the gas turbines in operation during this period. This removal rate is low when compared with the monthly design liquid removal rate of about 45,000 barrels per month per scrubber.

The liquid discharged from the scrubber is saturated with light hydrocarbons at scrubber operating temperature and pressure, when flashed to atmospheric pressure a portion of the original liquid from the scrubber is lost by evaporation.

It appears that the scrubbers will remove all of the liquids that would normally enter the system during the colder winter months and meet the design specification of 0.01 gal/mm scf. The exception would be very large slugs which would also have an impact on the steam boilers as well as the gas turbines.

BEST AVAILABLE DOCUMENT

Each scrubber is equipped with a high liquid level alarm. The alarm sounds and indicates the cause on the annunciator board in the turbine control room.

5.5 Liquids in Gas Turbine Fuel Gas Supply

5.5.1 Background

Before the commissioning of the mixing station, Sui gas was supplied to two of the gas turbines without being processed in the Sui filter-separator facility at Guddu. During this operation,the total gas flow from Sui was in excess of 102 MMscfd, the design capacity of the Sui dehydration facility. The nature of the pipeline and the station piping is conducive to the accumulation of liquids in low spots, hence the potential for the arrival of the liquids in slugs. Under these conditions, liquid hydrocarbons and glycol could be delivered to the pipeline and ultimately to the individual gas turbine fuel gas scrubbers in slugs which could exceed the capacity of the scrubbers. There is no conclusive evidence or records from the gas supply system that excess quantities of liquids ever reached the gas turbines. There is some indications that liquid arrived at the Peerless scrubbers in sufficient size

AVAILABLE DOCUMENT

to flood the separators and cause the turbine to trip. (See Appendix 1 - Telex from Charles Blue to H.C. Gerber dated March 17, 1986). WAPDA, however, was having Sui gas supply pressure control problems with the temporary bypass which was more likely to have been the cause for the shutdown. Furthermore, the blowing of liquids from temporary tanks may have been related to flashing liquids or to level control problems in the scrubbers. (See paragraph AA and BB of Mr. Blues telex).

In summary it cannot be determined what caused the shutdown, liquids in gas or pressure control problems.

The individual scrubbers in the gas turbine fuel gas supply are primarily intended as "polishing" separators to clean up the last vestiges of entrained liquid and solid particles. They are, however, guaranteed to reduce the liquid in gas to the turbines to the design specification of 0.1 gallons per million scf of gas provided that the internal cyclones are not overloaded with liquid or the unit is not flooded (See Section V-5.4.2). While the scrubbers have a liquid removal capacity of 45 gpm (1500 BPSD), slugs larger than the

BEST AVAILABLE DOCUMENT

instantaneous capacity of scrubbers were probable under conditions existing when the Sui filter-separators were bypassed and currently possible, even when the Sui filter-separators are in operation.

Since completion of the gas mixing facilities at Guddu, it is no longer necessary to burn Sui gas in the turbines without its being processed in the filter-separation facility at the steam station. The piping still exists for bypassing the Sui filter-separator station completely.

The inadequencies of the Sui filter-separator installation and its operation are discussed in Section V-5.1.

5.5.2 Liquids in Strainers

Gas turbine Unit No. 1 (G-7) was shut down due to apparent operating difficulties associated with the combustion system. The gas inlet fuel gas feed ring flange connections contained a thin coating of sticky brownish liquid which did not have any appreciable odor or taste. The wye strainer on the fuel gas feed line was opened for cleaning. The

BEST AVAILABLE DOCUMENT

strainer and piping were covered with a thin coat of black sticky liquid. This was later deduced to be glycol. It was completely soluble in water.

When the fuel gas heater and the proposed gas heater liquid scrubbers are installed and operating, the fuel gas to the scrubber will be superheated at least 20°F and have a minimum temperature of 120°F. The existing Peerless scrubbers in their present location downstream of the heaters will thus become superfluous. Their primary function will be for surge protection in case liquids get through the gas heater-liquid scrubber system.

5.5.3 Transfer Line

The fuel gas transfer line from the scrubbers to the gas turbines combustions system forms a low level loop wherein liquids could accumulate. This low level loop which is in a trench is approximately two hundred feet long. During shutdown, periods of low flow and colder winter months there is the possibility that condensation could occurred. The exact quantity and the impact upon the combustion system is indeterminable.

BEST AVAILABLE DOCUMENT

6.0 GENERAL ELECTRIC FUEL GAS SPECIFICATION

6.1 Fuel Gas Specification/Contracts

6.1.1 General

The General Electric fuel gas treatment and gas turbine GE fuel gas control and combustion system were designed to burn fuel gases in accordance with the provisions stated in the WAPDA Lot 1A/1B bid specification for the 450 MW Combined Cycle Power Station and the General Electric specifications for gas turbine fuel gases, GEI-41040C which is included in Section I, Introduction.

6.1.2 Lot 1A/1B Fuel Gas Specification

The fuel gas specifications presented in the Lot 1A/1B bid specification is excepted as follows :

BEST AVAILABLE DOCUMENT

Natural Gas

Natural gases from Mari, Sui and Kandhkot Gas Fields will be available. These gases will have the following properties:

	Mari	Sui	Kandhkot
Methane (% vol)	71.2	88.52	79.2
Ethane (% vol)	0.2	0.89	1.1
Propane (% vol)	-	0.26	1.1
Butane and higher (% vol)	-	0.37	0.4
Nitrogen (% vol)	19.5	2.46	16.6
Carbon dioxide (% vol)	9.0	7.35	2.5
Hydrogen Sulfide (Gr/100 cu. ft).	0.1	92.2	30.8
Mercaptan Sulfide (Gr/100 cu ft)	-	3.8	1.2
Higher heating value (kJ/NM^3)	26,940	34,740	31,350

Natural gas will be supplied at the battery limit at 305 $\pm$ 7 psig pressure and 100 F temperature.

The gas turbine unit shall be designed for satisfactory operation with natural gas having heating values ranging from 26,940 kJ/Nm^3 to 34,740 kJ/Nm^3.

Mainly the natural gas from Mari Gas field will be utilized and performance tests for gas operation shall be based on this gas.

BEST AVAILABLE DOCUMENT

6.1.3 . Fuel Gas Specification No. GEI-41040C

Key paragraphs in General Electric specification No. GEI-41040C related to this application are excerpted below :

Contaminants

The gas shall be what is known in the industry as "Dry Gas", that is, the gasoline vapor in 1000 cubic feet at standard conditions (60°F and 30 inches H_g, absolute) shall be equivalent to not more than 0.1 gallon liquid.

NOTE -"Wet gas" shall not be excluded as a fuel for gas turbines, but when used, provision shall be made to avoid too sudden a change in heating value during starting and running.

No napthalene or gas hydrates or other solid or semi-solid hydrocarbons shall condense from the gas when its temperature is dropped by 20°F at constant pressure.

BEST AVAILABLE DOCUMENT

Heating Value

The lower or net heat value must lie in the range of 300 to 5000 BTU per cubic foot. However, whatever heating value is specified for a given application within this range, it shall not differ from the design or specified value by more than plus or minus 10 percent.

The WAPDA fuel gas specification in the Lot 1A/1B bid specification and the General Electric Specification are generally in accord. Comments related to the compatibility of these specifications are:

1 The heating value range in the WAPDA specification is ± 12.6% which is higher than the maximum allowable of ± 10% stated in the GE specification. The gas turbine fuel control and combustion system were designed to accommodate this wide range of heating value.

2 All of the above fuel gases will be dry at the stated supply conditions of 100F temperature and 305 ± 7 psig pressure, which satisfies the gas turbine requirements.

BEST AVAILABLE DOCUMENT

The fuel gas composition and the gas temperature at the supply point to the gas turbine are significant factors used in the design of the fuel control and combustion system. These influence the quantity of heat release that will pass through a fixed orifice at a given pressure ratio. This characteristic is expressed by the Wobbe index.

At the supply temperature of 100F and the composition of each fuel, the Wobbe index for each fuel in the WAPDA specification is as follows with the Wobbe index at fuel supply temperature of 30F presented for comparison:

Fuel Gas	Mari	Sui	Kandhkot
High heating value (kJ/Nm^3)	26,940	34,740	31,350
Lower heating value (kJ/Nm^3)	24,270	31,250	28,992.5
(Btu/scf)	652	839.2	779.5
Specific gravity (Air = 1.0)	0.721	0.647	0.673
Wobbe Index at 100F	32.45	44.09	40.01
Wobbe Index at 30F	34.69	47.13	42.87

BEST AVAILABLE DOCUMENT

The fuel gas control and combustion system for the WAPDA Guddu MS-9001E gas turbines were designed to accommodate the variation in Wobbe index of ± 15.2% as required by the range of fuel gas composition and 100F supply temperature in the Lot 1A/1B specification. The Wobbe index range is increased by 6.9% to accommodate the Sui gas at 30F. The flow area of the gas fuel nozzle tips were reduced to accommodate this condition

6.1.4 Lot 4 Fuel Gas Specification

The fuel gas specification included in the Lot 4 bid specification presented a composition differing from that in the Lot 1A/1B specification. The Sui and Kandhkot compositions were identical to those in the Lot 1A/1B bid specification. The natural gas fuel specification in the Lot 4 bid specification is presented on pages TS-4-3 and TS-4-4 of Volume 2, Book 1 as follows:

BEST AVAILABLE DOCUMENT

Natural gas from the Mari Gas Field will be the normal fuel for the gas turbines. However, the gas turbine will be provided with a dual fuel system and will be capable of operating either on natural gas or distillate oil or any combination thereof. The characteristics of two available natural gases are as follows:

	Sui	Kandhkot
Methane (Vol. %)	88.52	79.2
Ethane (Vol. %)	0.89	1.1
Propane (Vol. %)	0.26	1.1
Butane and Higher (Vol. %)	0.37	0.4
Nitrogen (Vol. %)	2.46	16.6
Carbon Dioxide (Vol. %)	7.35	2.5
Hydrogen Sulfide (Gr/100 cu.ft)	92.2	30.8
Merceptan Sulfide (Gr/100 cu.ft)	3.8	1.2
Higher Heating Value (kJ/Nm^3)	34,740	31,350

The composition of Mari gas is as follows:

Methane (Vol. %)	68 to 76
Ethane and Heavier (Vol. %)	0.1 to 0.4
Carbon Dioxide (Vol. %)	6.0 to 10.0
Nitrogen (Mol. %)	18.0 to 22.0
Hydrogen Sulfide, ppm	0.5 to 5.0
Gas Gravity	0.627 to 0.789
Higher Heating Value (kJ/Nm^3)	25,700 to 28,000
Nitrogen plus Carbon Dioxide (Mol. %)	Maximum 30

BEST AVAILABLE DOCUMENT

Following is a "worst case" gas within the limits of the Mari gas composition at quoted in the Lot 4 Fuel gas specification:

Mari Gas

Component	% By Volume
Methane	68.0
Ethane and heavier	0.1
Carbon dioxide	10.0
Nitrogen	21.9
Hydrogen sulfide	0.0005

Physical Characteristics

Specific gravity (Air = 1.0)	0.7405
Higher heating value (kJ/Nm^3)	25,700
Lower Heating Value (kJ/Nm^3)	23,142
(Btu/scf)	621.4
Wobbe index at 100F - English	30.51
100F Metric	1524.7
30F - English	32.62
30F Metric	1630.0

The Lot 4 specification analysis increases the Wobbe index range a further 6.35% which results in a total range between Sui gas at 30F to Mari gas at 100F of ± 21.4%. Note that this is based on a composition with the lowest stated hydrocarbon content that fits all the statements except "carbon dioxide plus nitrogen not to exceed 30" and results in a specific gravity that is 6.5% lower than the stated maximum of 0.789.

BEST AVAILABLE DOCUMENT

6.1.5 WAPDA Gas Control

The gas quality or composition stated in the WAPDA gas contracts do not agree with either of the above compositions that have been provided as a design basis. The gas contracts state the following related to commitments by the gas suppliers to WAPDA:

1. Sui (page 3 of PPL/WAPDA Contract dated December 5, 1974)

"Quality of gas 8. The quality of raw gas sold by the seller and purchased by the buyer conforms to the following specifications:

a. Max H_2S content 13 Gr/100 cu.ft
b. Max CO_2 content 8 percent (by volume)
c. Max total sulphur content 20 Gr/100 cu.ft.
d. Max oxygen content 1.0% (by volume)
e. Max gross heating value 930/Btu/cu.ft (Wet)
f. Min. gross heating value 870/Btu/cu.ft (Wet)"

BEST AVAILABLE DOCUMENT

2. Mari (pages 9 and 10 of Fauji Foundation/WAPDA contract dated April 24, 1984)

"ARTICLE IV

QUALITY OF GAS

(a) Seller shall supply Gas to Buyer as produced by Seller. Seller shall not be required to, in any way, treat, dehydrate or process the Gas produced, provided however, Seller shall install equipment such as gas liquid separator(s) for removal of free water prior to delivery of Gas to Buyer.

(b) Seller plans to produce Gas from several wells in the Mari Gas Field, which, when gathered and commingled, is expected to have a composition within the range indicated below for individual components:

BEST AVAILABLE DOCUMENT

Methane	68 to 76 mole percent
Ethane and Heavier	0.1 to 0.4 mole perce
Carbon Dioxide	6 to 10 mole percent
Nitrogen	18 to 22 mole percent
Nitrogen plus Carbon Dioxide	30 maximum mole perce
Condensable Hydrocarbons	Negligible
Water as liquid	Negligible
Hydrogen sulfide	0.5 to 5 PPM
Calorific value	690 to 750 Btu/scf

Seller shall not be bound to supply gas with hydrocarbons and non-hydrocarbon components witl the above composition ranges.

(c) In no event shall Seller be obliged to operate Field in a way not consistent with good gas fie: practice, or to make any investments or incur ai operating expenses that would not have been made or incurred in the absence of this clause.

3. Kandhkot (pages 4 and 5 of PPL/WAPDA contract dated December 31, 1986)

BEST AVAILABLE DOCUMENT

"<u>Quality of gas</u> 8. The quality of Raw Gas sold by the Supplier and purchased by the Buyer shall conform to the following specifications.

a)	Max H_2S content	40 gr/100 SCF
b)	Max CO_2 content	10 mole %
c)	Max total sulphur content	20 Gr/100 SCF
d)	Max oxygen content	1 mole %
e)	Max gross heating value	875 Btu/Scf
f)	Min gross heating value	725 Btu/Scf"

The fuel gas composition is not defined by the gas contracts. Since the fuel gas composition affects the gas turbine operation and the life of combustion system parts, the fuel gas composition must be monitored continuously.

BEST AVAILABLE DOCUMENT

6.2 SPECIFICATION GEI-41040C

6.2.1 General

Paragraph 3.1.6 of the charter for the Fuel Gas Study Team reads as follows:

"Determine whether gas fuels, as currently delivered to the gas turbines, or as likely to be delivered during the cooler winter months, are suitable for use in the gas turbines. The fuel specification which shall be used as basis is GE specification GEI-41040C. The team should review this specification and elaborate upon it, if required".

6.2.2 Contaminants

1. The elaborate arrangements that are presently provided in the treatment plants at the fields of Sui, Mari and Kandhkot, leaves no possibility of passing through any moisture (liquid water) to the pipelines connecting the Guddu station if all equipment is operating properly. Any solids that are picked up

BEST AVAILABLE DOCUMENT

en-route are further eliminated by the filters-separators at the receiving end (Guddu) before reaching the gas turbines. Finally the Peerless scrubbers are intended to completely protect the gas turbines from any stray solids or liquids that may find their way through, since these are placed immediately before the turbines.

2. There has never been a complaint with regard to moisture (water) having been noticed. All the three Sui, Mari and Kandhkot have standard moisture eliminating dehydration plants. The dehydration plants at Sui and Kandhkot are operating under the charge of Pakistan Petroleum Ltd. (PPL) on behalf of WAPDA, and the dehydration plant at Mari is run by WAPDA staff themselves. All the three plants were operational at the time the Team visited.

3. The contaminants listed in the specification and which are likely to be picked up in the transmission pipelines, are entrapped by the filter-separators that have been installed at the Guddu Power Plant. These filter-separators are found to be operational

BEST AVAILABLE DOCUMENT

and maintained by replacing the elements, the ones which have been replaced were also inspected and except for those which were renewed at the initial stages, others were still in good condition. Standby filter-separator are installed in parallel which obviates the necessity of bypassing the filter-separators for maintenance purposes.

6.2.3 Heating Value

Variation of heating value to the extent of 10 percent is permissible according to the specification noted above. Wider variation ranges up to 20 percent also fall within the design of the gas turbines supplied by G.E. What difference there is in the design of one from the other, the specification is silent on. It would have been advisable to highlight any design features that would render the turbine immune to wider range of variation in heating value; thereby assisting the consultants on the project to draw up acceptable technical specifications.

BEST AVAILABLE DOCUMENT

It is interesting to note that a full paragraph has been devoted to the precautionary measures that have been included in the design of the turbine, to obviate the possibility of slug formation. It says "precautions are taken in the design of the gas turbine to prevent traps where gasoline or liquid petroleum could accumulate and slug suddenly into the fuel system, particularly during starting and particularly with wet gas". This gives an understanding that such an eventuality is not altogether unknown to the turbine manufacturers, but is well cared for in the design of the turbine systems layout design. In fact with the passage of time and acquisition of more experience any misgivings with regard to the damages caused to the gas turbine hot path components were exclusively due to the presence of liquid gas is now narrowing down, and increased attention to the design factors to such components like nozzle configuration and stiffening of shrouds and certain other modification to the design of hot path components all indicate a systematic improvement in the design of the equipment. This however, was forfeited in the early stages of operation because of the hasty commission of first units under extreme pressure of need of the moment.

BEST AVAILABLE DOCUMENT

V-7 ADDITIONAL GAS TREATMENT FACILITIES

7.1 Fuel Gas Heater Liquid Scrubbers

7.1.1 General

The original fuel gas composition provided to General Electric for Gas Turbine Design did not indicate the presence of hydrocarbons heavier than butanes, whereas the Sui and Kandhkot gas samples obtained by the team and analyzed at Karachi showed the presence of hexanes. The other sample which were not analyzed at Karachi did not show the presence of hydrocarbons heavier that ethanes. This does not imply that heavier hydrocarbons were not present but rather that the gas chromatograph was not calibrated to detect them.

Glycol was found in the Mari gas. It was later learned that the dehydration system at Mari, which has no filter-separators is experiencing excessive glycol losses.

The Sui gas contains C_6 and heavier hydrocarbons. An analyses of samples taken from the Sui filter-separators at Guddu showed the presence of C_{12} and heavier hydrocarbons.

BEST AVAILABLE DOCUMENT

7.1.2 Specification for Fuel Gas Heater Liquid Scrubber

The following specification is for a single 100 percent capacity liquid scrubber upstream of each fuel gas heater.

- Performance Requirements

  Each unit shall meet the following performance and design parameters and other requirements.

- Gas flow

  1,000 SCFM minimum (0.06 million standard cubic feet per hour)

  190,000 SCFM maximum (11.4 million standard cubic feet per hour)

- Gas Inlet Temperature

  40 F minimum

  109 F maximum

- Gas Pressure

  Operating pressure 300 psig

  Design pressure 400 psig

BEST AVAILABLE DOCUMENT

- Fuel Pressure Drop

  5 psi maximum

- Maximum Allowable Entrained Liquids

  0.1 gal/mmscf.

- Product Gas Characteristics

  The equipment shall remove liquids, solids and sludge like material from any one individual gas or any mixture of the following three specification grade product gases:

	Mari Gas	Sui Gas	Kandhkot Gas
Methane (% vol)	71.2	88.82	79.2
Ethane(% vol)	0.2	0.89	1.1
Propane (% vol)	-	0.26	1.1
Butane and higher	-	0.37	0.4
Nitrogen (% vol)	19.5	2.46	16.6
Carbon dioxide	9.0	7.35	2.5
Hydrogen sulfide (Gr/100 cu.ft)	0.1	92.2	30.8
Mercaptan sulfide	-	3.8	1.2

BEST AVAILABLE DOCUMENT

- Liquid Properties

  C_5 + Hydrocarbons to C_{12}

  Water

  Triethylene Glycol

During normal summer operations the quantity of liquids will be minimal. The possibility of larger quantities of liquid entering the scrubbers exists. This could represent up to several gallons per minute during the colder winter months, plus slugs of liquid of indeterminate size.

- Solid Materials

  Rust and scale

  Traces of sand and clay

The glycol forms a sticky emulsion that coats fiberglass elements. It also passes through the filter element along with a naphtha kerosene type liquid and water.

Figure 7-1.1-A shows depicts the fuel gas heating and liquid scrubber system for two 100 percent capacity units.

BEST AVAILABLE DOCUMENT

Figure V-7.1.1-B depicts the liquid scrubber controls. The scrubbers should be equipped with a two stage level control, high level alarms and a high-high liquid level shutdown to prevent liquid carryover into the gas turbines. Should a large slug of liquid which exceeds the capacity of the 1.1/2 inch control valve enter the scrubber, then the 4 inch quick acting liquid dump valve would be activated by the high liquid level controls.

Supportive Equipment

1. DP cell with high pressure alarm
2. Level gages with back lighting
3. Level controllers with high level alarms
4. All drains, instrument connections handling liquids and discharge line should be flanged for ease of cleaning.
5. Flanged facilities shall be provided for ease of cleaning.
6. Skirt or saddles for mounting.
7. Pressure gage connections.
8. 1 lot of block valves for gas side.
9. 1 lot of block valves for liquid side.
10. Safety valve.

BEST AVAILABLE DOCUMENT

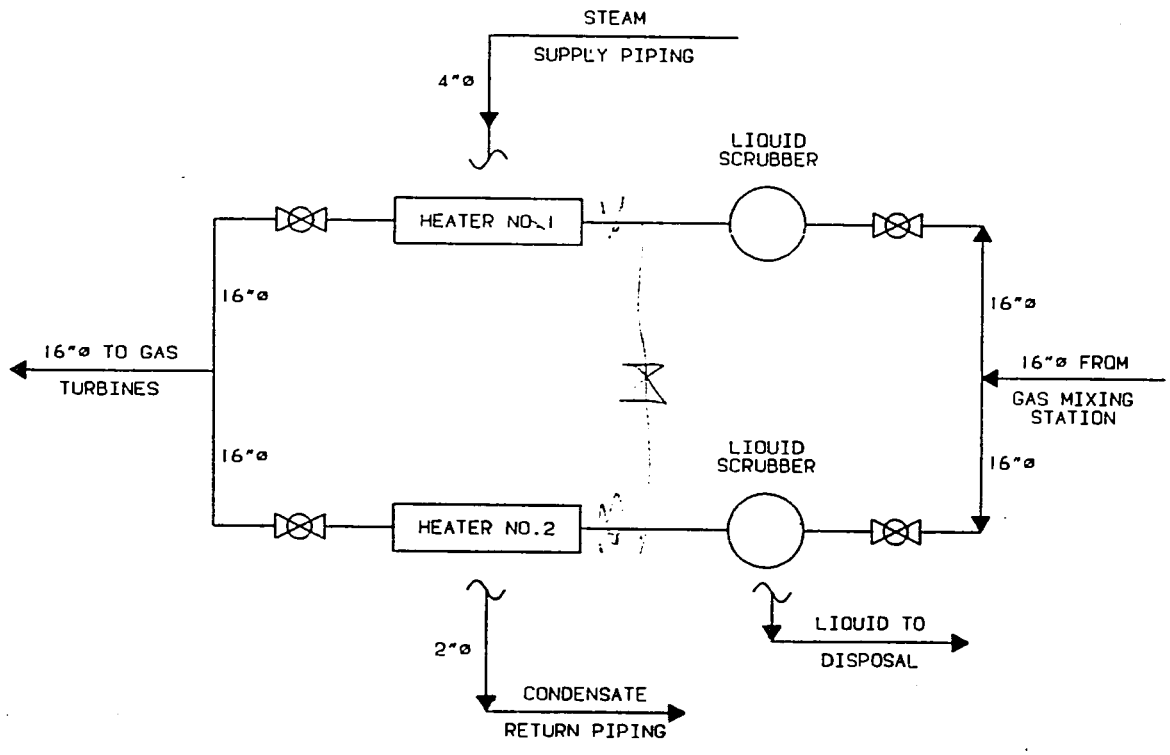

FIGURE V-7.1.1-A

FLUE GAS HEATING AND LIQUID SCRUBBER SYSTEM

NOVEMBER, 1987

BEST AVAILABLE DOCUMENT

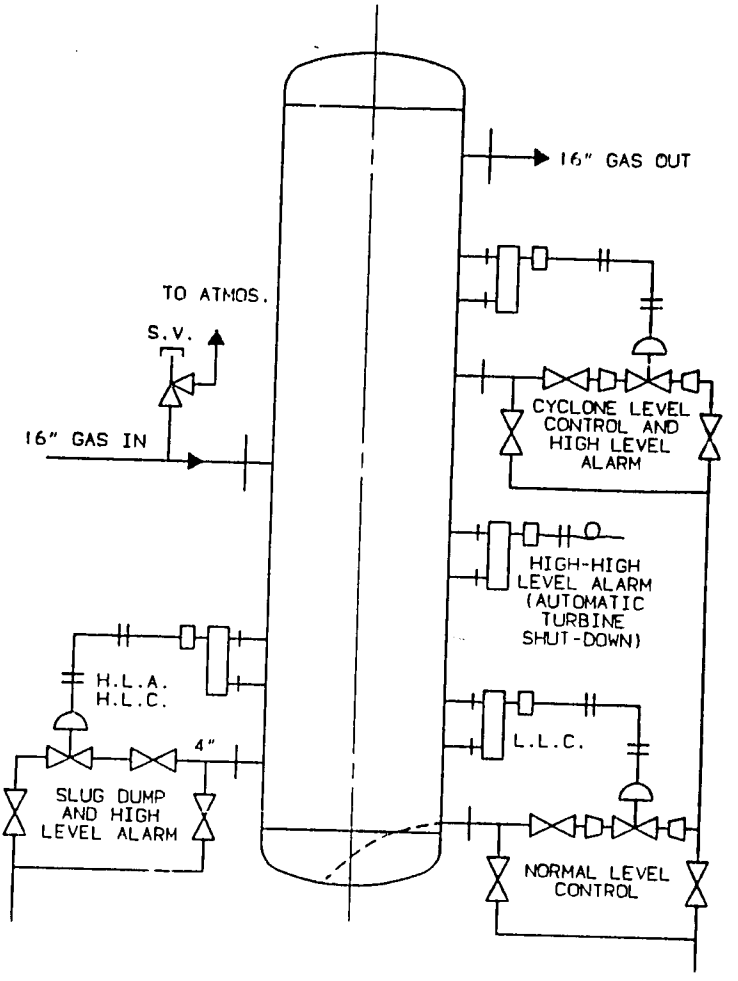

FIGURE V-7.1.1-B
LIQUID SCRUBBER CONTROLS

NOVEMBER, 1987

BEST AVAILABLE DOCUMENT

7.2 Sui Dehydration System Study

The Sui gas field glycol dehydration system is undersized based on the current gas demand. Refer to Section V-3.2.

If Sui gas is to be burned in the Guddu Combined Cycle Power Plant (Refer to Section V-4) a study should be performed pertaining to the upgrading and/or installation of additional dehydration capacity at the Sui gas field site. The Sui filtration station at Guddu indicates that appreciable quantities of heavy (C_4 plus) hydrocarbons and glycol are entrained in the Sui gas. The study should include but not be limited to the following:

1. The total cost to design specify and enlarge the present dehydration facility
2. The current annual cost of replacing the glycol
3. Operating and maintaining cost savings at the Guddu site, including filter-separator replacement.
4. The short and long term impact on the operations and maintenance of the gas turbines.
5. The impact of moisture in the gas stream or the Sui pipeline. The gas contains H_2S and CO_2 which react with water to form acids.

BEST AVAILABLE DOCUMENT

7.3 Sui Guddu Site Filter-Separator Study

Operating records show that there is an appreciable carryover of liquid hydrocarbons and glycol during the colder winter months ,(Refer to Section V-5.1, and Table V-2.1-C).1 Two of the four filter-separators have neither lower chamber for liquid accumulation nor level control devices. The other two have lower chambers and gage glasses but no level control devices.

On inspection of the filter elements within two of the filters and the discarded filters it was evident that the sticky-tarry glycol emulsion passes through the filter elements. Furthermore, naphtha and kerosene type liquids are easily passed through and carried into the mixing station and ultimately a portion may find its way into the turbine combustion system.

There is a possibility that Sui gas will not be burned at the Guddu site in the future (Refer to Section V-4). If such should not be the case then a study should be performed pertaining to upgrading or replacing these filter-separators. The study should include but not be limited to the following:

BEST AVAILABLE DOCUMENT

1. Installation of a liquid scrubber similar to that proposed between the mixing station and fuel gas heaters be located upstream of the existing filter-separators to intercept liquids which enters the Guddu facility during the winter months. The scrubber would be similar to the proposed fuel gas heater liquid scrubber but specified for a higher operating pressures.

2. The total cost pertaining to the replacement or upgrading of the filter-separators.

3. The cost pertaining to operating and maintenance at the Guddu site.

4. The credit for liquid hydrocarbons that are recoverable. Currently the hydrocarbons liquids enter a drain type sump and are not recovered. During blowdown of the filter-separators the liquid hydrocarbon flashes to form a liquid and a vapor. The vapor represents a health as well as safety hazard. It could be highly flammable.

5. The impact of the sticky glycol on the proposed fuel gas heater system (Refer to V-5.4 and V-7.1)

6. The short and long term impact on the operation of the gas turbines.

BEST AVAILABLE DOCUMENT

7.4 Mari Gas Field Glycol Filter-Separator Study

The glycol dehydration facility at the Mari gas field site does not have any filters-separators to remove glycol entrained in the Mari product gas. Glycol has been found in the Guddu filter-separators up to the inlet piping and strainers on the gas turbine combustion system.

Subsequent correspondences received by the fuel gas study team after their departure from Pakistan revealed that WAPDA is losing an excessive quantities of glycol at the Mari gas dehydration plant.

One proposal made by WAPDA (See Appendix 2 Mari Glycol Loss Problems) was to shut down the Mari dehydration system to save on glycol. This is absolutely not recommended. The gas contains, H_2S and CO_2 which reacts with water to form a weak acid. This will have severe corrosive effects on the pipeline to the Guddu Power Plant. This has been substantiated by evidence of corrosion in the pipelines to the Fauji and Fertilizer Plants. A corrosion inhibitor is being injected into the pipelines to these plants.

BEST AVAILABLE DOCUMENT

In view of the above, immediate consideration should be given to installing filter-separators at the Mari Dehydration Plant. These including spare units, should be similar in design to those at Kandhkot and be specified for the maximum gas flow rate from Mari to Guddu.

A review of the overall performance of the existing Mari Glycol dehydration system should be performed. This should include an evaluation pertaining to the design and operation of the system, forced outage and the possible addition of a spare or supplementary dehydration unit.

1. Total cost to design, specify and install the glycol filter-separators and the installation of additional dehydration capacity.

2. The current annual cost of replacing the lost glycol. If the Mari gas rate increases, the glycol loss rate will increase

3. The cost pertaining to operations and maintenance at the Guddu site, including filter element replacement

4. The short and long term impact on the operation of the gas turbines

5. The impact of sticky glycol on the gas pipeline.

6 The impact of corrosion on the Mari pipeline.

BEST AVAILABLE DOCUMENT

V-8 ESTIMATED COST AND SCHEDULE FOR FUEL GAS HEATER LIQUID SCRUBBERS

8.1 General

The Peerless Manufacturing Company and Perry Equipment Corporation (PECO) were contacted pertaining to their recommendations and budget cost to provide the Fuel Gas Heater Liquid Scrubbers which were recommended in V-7.1, Fuel Gas Heater Liquid Scrubbers.

Peerless recommended and provided a quotation for a unit that is similar to the existing Peerless Scrubbers on the gas turbines.

PECO recommended and provided a quotation for a filter-separator system which is similar to the units, such as the Mari filter-separators, currently in use at Guddu.

The PECO system would be the preferred system for normal winter type operations at Guddu where the anticipated liquid in the fuel gas would be relatively low under normal operating circumstances even with 100% Sui gas feed to the gas turbines.

A conventional type liquid knock-out drum with some type of mist elimination would be more suitable than the PECO type filter-separator. The Peerless liquid scrubber is a more

BEST AVAILABLE DOCUMENT

desirable type unit. It is recommended and is used as the bases for this estimate.

The Peerless scrubber differs from the existing scrubbers on the gas turbine in that the liquid enters below the multiclone separation system rather than directly into the multiclones. in this manner the bulk of the liquid, particularly surges or slugs, will be removed prior to entering the multiclones. Provisions are provided for normal liquid removal and an emergency quick acting liquid discharge system.

Peerless provided a quotation for the scrubbers as requested whereas PECO provided a complete quotation for a complete liquid scrubbing system including all interconnecting piping, instrumentation and controls. Their quotation does not include foundations and process piping and valving.

The PECO estimate, which is included in Appendix 3, will be used as the bases for this preliminary estimate. It will be modified for the less expensive Peerless scrubbers, the elimination of extra filter elements, the inclusion of missing items such as foundations, block valves and fuel gas piping.

BEST AVAILABLE DOCUMENT

8.2 Estimated Cost in Fourth Quarter 1978

8.2.1 Adjusted PECO Quotation

1.	Scrubbers, Peerless	$35,000 each
2.	Export Preparation	1,140 each
3.	Controls	48,175 per set
4.	Optional + Crating	5,830 per set
5.	Inland Freight	2,910 Total
	Sub Total	$183,200
	Ocean Freight	10,000 Total
	Adjusted Quotation	$193.200

8.2.2 Additional Equipment

4-16", 300 psig B.W. Plug Valves	$31,200 Total
1-10", 300 psig Safety Valves	9,000 Total
10 each 16, 4 and 2" Ells	3,000 Total
150'-16", 200'-4" & 100'-2" CS Pipe	8,000 Total
Reinforced concrete pad	2,000 Total
Shipping Cost, Additional Equipment	3,600 Total
Total Equipment Cost	$250,000

BEST AVAILABLE DOCUMENT

8.2.3 An estimated field installation cost of 1.1 million rupies was provided by Gibbs & Hill, Pakistan based on similar size Guddu projects.

8.2.4 Schedule

The estimate for engineering, procurementt and installation is approximately fourteen months. This includes:

- Preliminary design specification and procurement	4 months
- Shop design and fabrication with engineering drawings available two months after award of contract	4 months
- Transportation and Shipping	2 months
- Installation	4 months

The actual hookup of the major instrumentation ties-in to the main control board and gas turbine control system may take a little longer but once constructed the system can be activated as soon as the liquid level controllers are functional

Provisions should be made for quick tie-ins between the new fuel gas heater and the mixing station during the installation of the fuel gas heater system.

BEST AVAILABLE DOCUMENT

V-9 OPERATIONS AND MAINTENANCE

9.1 General

The plant is staffed with operators. While many are unskilled and have a relatively high turnover rate, supervisory personnel are qualified and competent.

Maintenance is a problem due to a shortage of skilled personnel, a high turnover rate and a shortage of spare parts and maintenance supplies.

9.2 Gravity meters

Specific gravity is not needed in calculating gas consumption for contract purposes. For this reason, the specific gravity instruments had not been activated and readings have not been recorded. This is unfortunate; a record of specific gravity together with the heating value of the gas would provide information from which gas composition could be determined with reasonable accuracy. During the Teams visit to Guddu, these meters were placed in operation and recording of specific gravity on an hourly basis was commenced.

BEST AVAILABLE DOCUMENT

A single turbine type flow meter is installed on each gas stream upstream of the mixing station. It measures that combined flow to the steam plant and gas turbine mixing stations. Due to foreign matter in the pipeline, one of the meters was damaged. The other two are out of service due to lubrication problems.

Flow quantities for billing purposes, are determined by the seller. When the turbine meters are placed in service, there will be no separate measurement of gas to the steam plant and the gas turbine plant. Rate of fuel gas flow to each individual turbine is indicated on the control panel. A running total is maintained but no permanent record is made of changes in the rate of flow.

9.3 Level Controllers and Drains

All filter-separators except those on Sui gas are equipped with level controllers which can automatically dump accumulated liquids.

For operating reasons, the operators prefer to dump accumulated liquids manually. As a result, many of the level controllers in the plant are deactivated either by shutting off gas for operation or by closing block valves in the liquid drain lines.

BEST AVAILABLE DOCUMENT

Accumulated liquid can still be dumped manually if the level controllers are put in operation. If the control level is set fairly high, liquid appears in the gage glass before a sufficient level to activate the dump valve accumulates.

9.4 High level alarms

The Peerless Scrubbers on the individual gas turbine fuel supply lines are equipped with high level alarms. When liquid reaches the alarm level, an alarm sounds and the situation is signaled in the turbine control unit. General Electric proposes to make provision that if the alarm level persists for ten minutes, the turbine will shut down automatically. Team members would suggest on immediate shutdown to protect the gas turbines from excessive damage.

9.5 Gauges and thermometers

Pressure gages and indicating thermometers are installed at strategic points in the piping system. There are numerous situations in which pressure gages on the same piping indicate different pressures. This merely indicates that gages are not calibrated.

BEST AVAILABLE DOCUMENT

9.6 Pressure Controllers

Hunting of the pressure of fuel gas supplied to the turbine was observed. Pressure fluctuates between 300 and 350 psig on a cycle of between one and two minutes. This fluctuation presents no serious problem since the fuel control on the gas turbines can handle this range.

BEST AVAILABLE COPY

VI. GENERAL ELECTRIC STATEMENT OF COMBUSTION SYSTEM PROBLEMS

V.I-1 GENERAL

The gas turbines are General Electric Model MS-9001E units. These are high technology machines that provide high efficiency combined cycle power generation. Ten units of this model have 1-5 years operating experience. The combustion system is essentially identical to that on the General Electric MS-7001E gas turbines with over 110 units in operation.

The four MS-9001E gas turbines operating at the WAPDA Guddu station 450 MW combined cycle power generation system have experienced combustion hot parts lives that are shorter than those experienced on previous similar units. These four units are burning fuel from three sources with widely varying composition. These gas turbines entered service during the period between December 1985 and April 1986 and have operated [illegible] hours.

During December, 1985 and January 1986, the gas turbines operated exclusively on Fuel Gas that bypassed the Guddu filter-separators and at a temperature of 10-30°C. During the

BEST AVAILABLE DOCUMENT

period from February, [illegible] through November 1986 the gas turbines burned either [illegible] Sui gas or Mari gas. After the gas mixing station [illegible] commissioned in November, 1986 filtered Sui gas and [illegible] was fired through March, 1987. From April, 1987 to [illegible] Mari gas or a mixture of Mari and Kandhkot gas has been [illegible].

The gas turbine combustion system parts deterioration and other component damage [illegible] discovered primarily during inspections performed [illegible] 1986 and early 1987. some of the damage, fuel gas [illegible] cracks as an example, were discovered during operation [illegible] were repaired during forced outages. A summary of [illegible] turbine problems is presented on Table VI-1-A. The [illegible] problems were experienced when the gas turbines were [illegible] on Sui gas with the Sui filter-separator system [illegible] and prior to gas turbine modifications to improve [illegible] operation. Some combustion system problems have [illegible] following the exclusion of Sui gas and the gas turbine [illegible] modifications.

The discussion in this section provides a summary description of the gas turbine combustion and fuel gas control systems regarding the effect of fuel gas characteristics on operation followed by discussion of problems experienced at Guddu and corrective action that has been implemented and in progress.

BEST AVAILABLE DOCUMENT

TABLE VI-1-A

SUMMARY OF GAS TURBINE PROBLEMS
AT WAPDA [illegible] STATION

1. Rotor high vibration while operating at low load and deceleration during shutdown
2. No. 2 bearing material wiping and cracking
3. Compressor discharge [illegible] cracks
4. Turbine casing cracks
5. Fuel gas manifold cracks
6. Compressor blade rubs
7. Transition piece overhaul [illegible] and cracking
8. Gas path temperature distortion
9. Combustion liner deterioration
   - Discharge spring seal wear
   - Cracks
   - Cross flame tube collar wear
   - Fuel nozzle collar (retainer) wear
10. Fuel nozzle swirl tip wear
11. Cross flame tube wear
12. Cross flame tube retainer wear
13. Cross flame tube interference with flow sleeve and wear

Problems during early operation which caused forced outages or were found during inspections in 1986 and early 1987

Problems that persist after gas turbine modifications and change from Sui to Mari/Kandhkot

BEST AVAILABLE DOCUMENT

VI-2 COMBUSTION AND FUEL GAS CONTROL SYSTEM DESCRIPTION

VI-2.1 Combustion System

The combustion system on the MS-9001E gas turbines at the WAPDA Guddu station is a dual fuel system configured to burn natural gas or No. 2 distillate oil singly or in combination with [illegible] restriction in operating range. The combustion system [illegible] of fourteen combustion chambers, each comprising a dual fuel nozzle, liner, flow sleeve, crossfire tubes and transition piece. Two combustors have spark plugs for ignition and two combustors on the opposite side of the gas turbine have flame detectors. Figure VI-5.2-A shows the [illegible] of one combustion chamber and its flow diagram.

The fuel nozzle directs the fuel gas so that it mixes with the primary air passing through the swirl tip assemblies when operating on natural gas. When operating on No. 2 distillate oil, the nozzle atomizes the oil with air from the atomizing air compressor and directs it into the primary air that enters the combustor through the swirl tip assembly. Figure VI-5.2-B illustrates the fuel nozzle.

BEST AVAILABLE DOCUMENT

The combustion liner contains the flame and mixes air with the combustion products so that the temperature of the gas leaving the combustor is within allowable limits for the turbine. The wall of the combustion liner is cooled by impingement of air entering through the slot cooling holes which forms an internal film for cooling the wall downstream of the slot. Figure [illegible] illustrates the combustion liner. The spring seal at the discharge end minimizes air leakage at the connection to the transition piece.

The transition piece is a duct that carries the hot combustion products from the combustion liner to the turbine nozzle. It transitions from the round combustor to the turbine nozzle annulus. Spring seals at the transition piece exit minimize air leakage into the hot gas path and bypassing the combustion system.

Fourteen crossfire tubes interconnect the combustion liners. Two combustors are equipped with spark plugs for ignition. Flame travels through the crossfire tubes from the fired combustors to fire the unfired combustors.

BEST AVAILABLE DOCUMENT

VI-2.2 Fuel Gas System

The fuel gas system receives fuel from the gas supply and meters it to the gas turbine combustors over the range from ignition flow to full load flow. A schematic diagram for the fuel gas system is shown on Figure VI-5.2-D. Key components are the stop/ratio valve, gas control valve, fuel manifold and piping and the gas manifold purge system.

The stop/ratio valve controls the pressure at the inlet to the gas control valve. The set point for the stop/ratio value varies with speed such that it is at its minimum set point at ignition speed (16%) and at its maximum set point at 100% speed. Varying the pressure at the inlet to the gas control valve enables it to control fuel flow stably over the wide range required by the gas turbine.

The gas control valve is the primary gas fuel flow control valve and is modulated by the governor to control acceleration during starting, control speed or load during normal operation, or limit gas temperature at the turbine first stage rotor inlet.

The fuel gas piping and manifold distributes the fuel to each of the 14 combustors. The manifold purge system directs air from the automizing air compressor to the fuel gas manifold to cool and purge the manifold and gas nozzles during operation on liquid fuel.

BEST AVAILABLE COPY

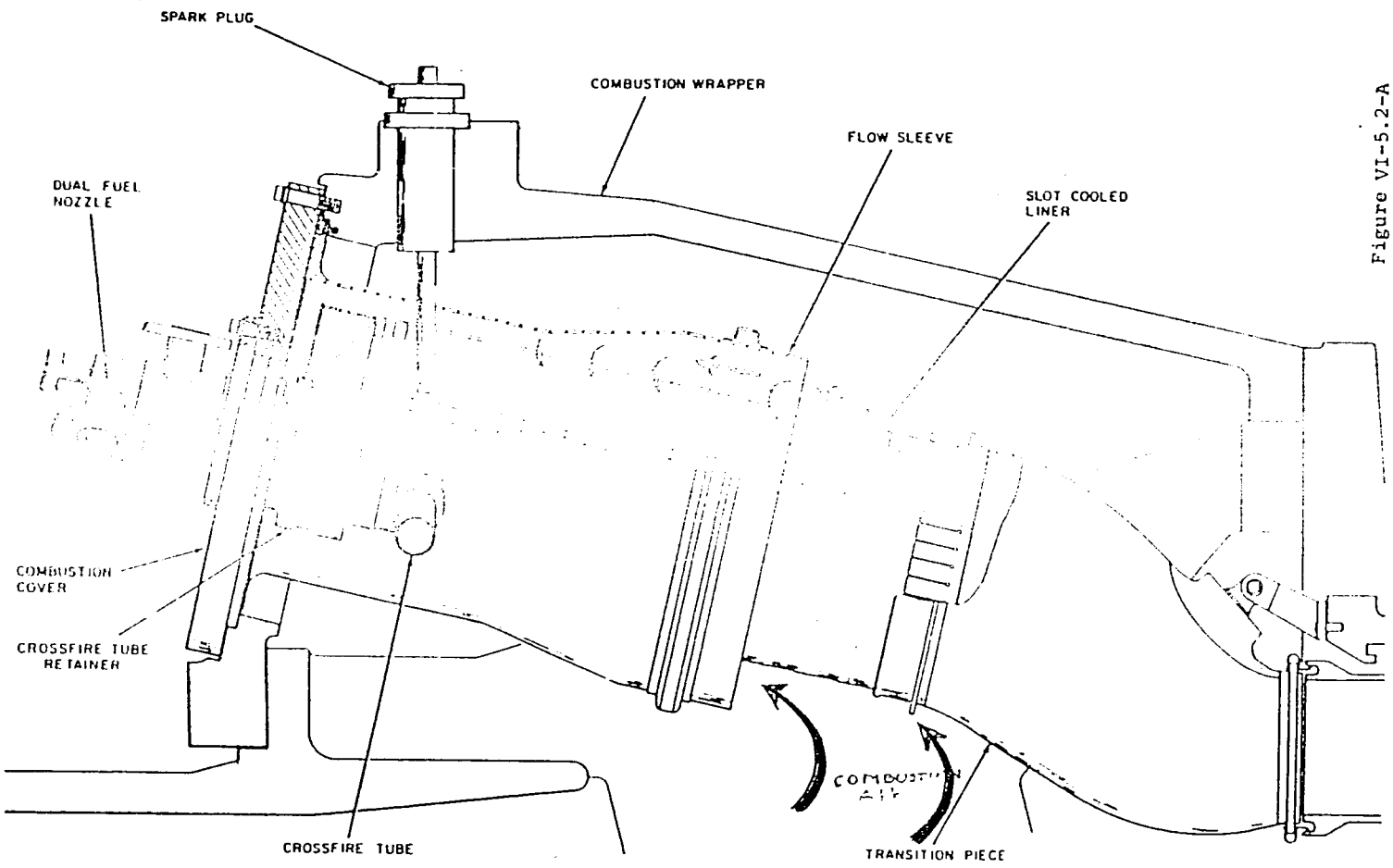

Figure VI-5.2-A
Combustion Chamber Details
and Flow Diagram

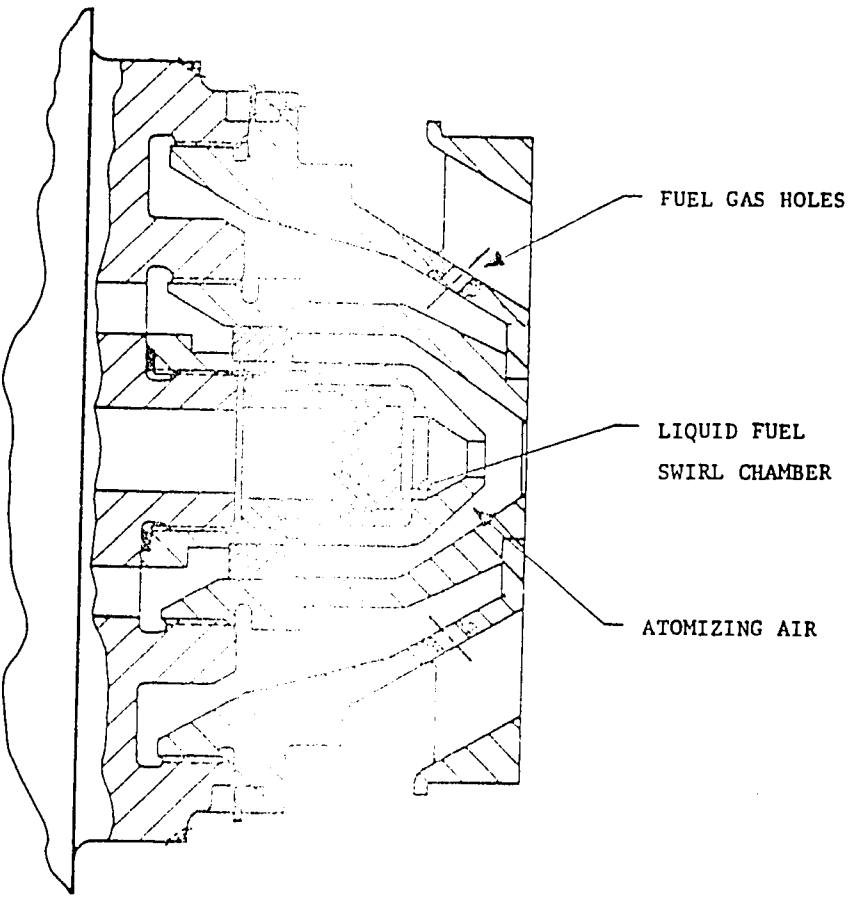

Figure VI-5.2-B

Fuel Nozzle Assembly

BEST AVAILABLE DOCUMENT

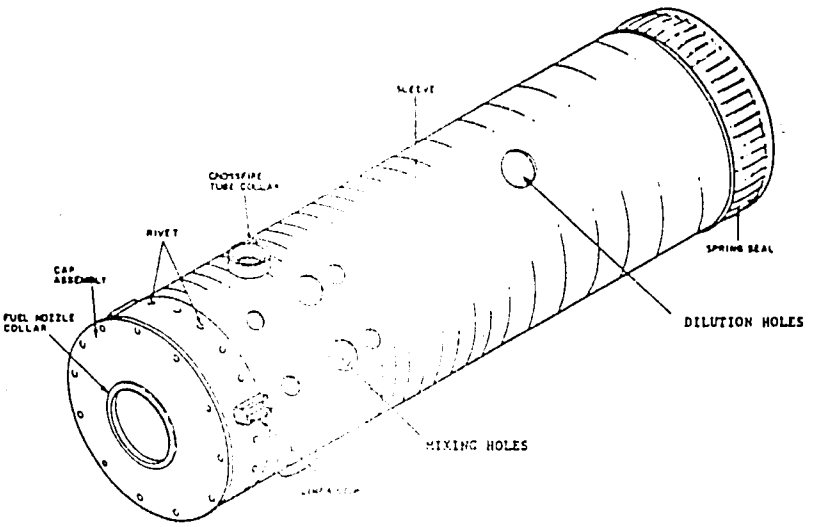

Figure VI-5.2-C

Slot Cooled Combustion Liner

BEST AVAILABLE DOCUMENT

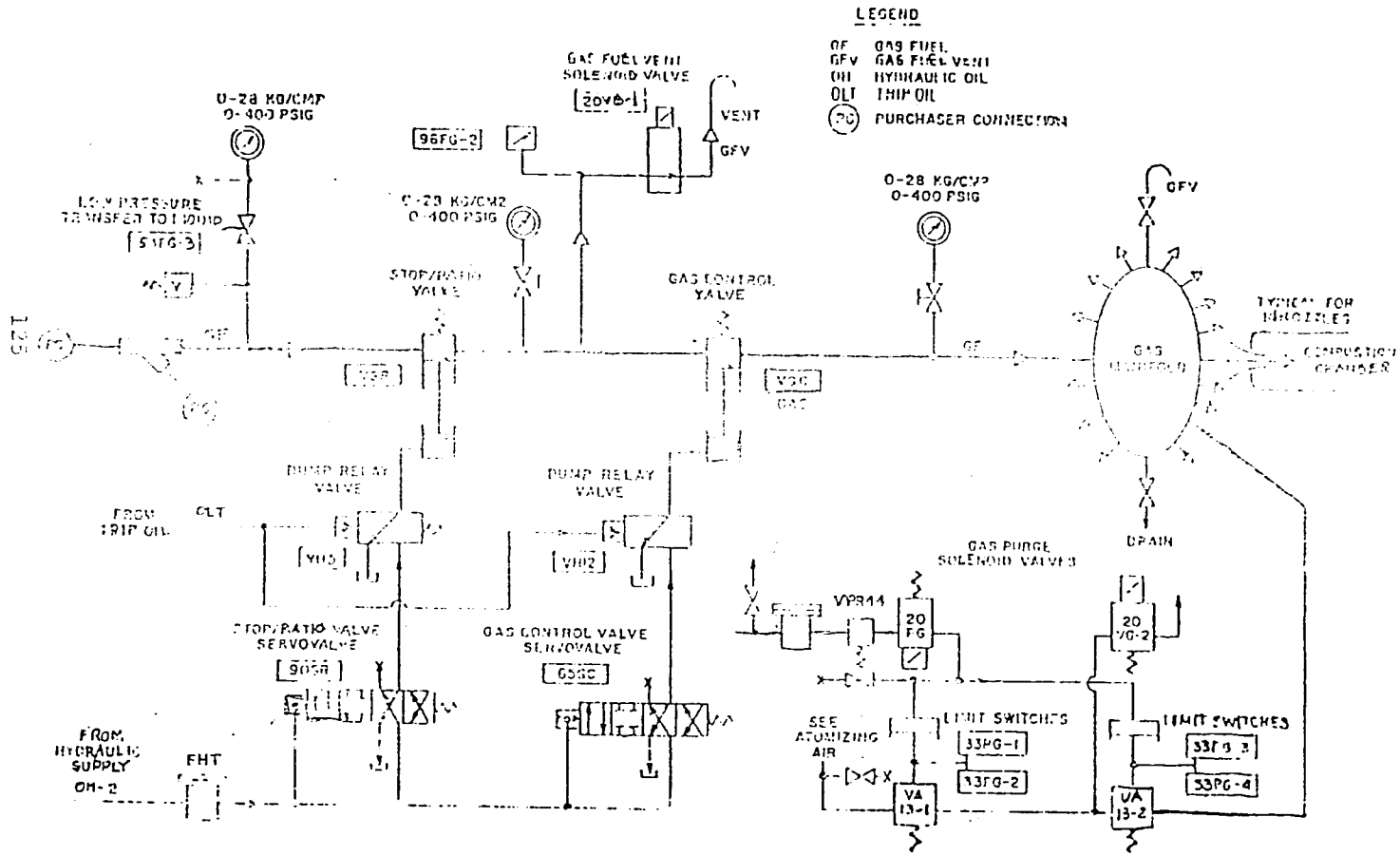

Figure V1-5.2-D
Fuel System Schematic (Natural Gas)

VI-3 FUEL GAS/COMBUSTION SYSTEM OPERATION SUMMARY

The fuel system meters fuel to the combustors over a range of 670 to 34,640 scfm (1140-58,900 Nm^3/hr). This is a turn down ratio of 52. The lowest flow occurs during the warmup period immediately following ignition and the highest fuel flow occurs at the highest load (peak load at -5C ambient air temperature).

At ignition, which occurs at approximately 16 percent speed, the fuel flow is set by the position of the stop/ratio valve and gas control valve. After ignition is sensed by the flame detectors in the combustors, the gas control valve opening is reduced to provide a low fuel flow for warmup. These fuel controls operate in an open loop mode during these periods.

When the warmup period is complete, the fuel flow is increased slowly by opening the gas control valve by the governor. The governor set point is increased to provide an acceleration of 0.25 percent per second. The fuel flow is under closed loop control during the acceleration to 100 percent speed.

BEST AVAILABLE DOCUMENT

During operation under load, fuel flow is controlled by the governor to maintain a speed or load setting that is set by the operator. Fuel flow is normally limited by the temperature limiter which limits the gas temperature entering the turbine first stage buckets based on exhaust gas temperature and compressor discharge pressure.

If the load is removed from the gas turbine suddenly (generator circuit breaker opened or other action in the system), the fuel flow is reduced to a minimum fuel setting. This is a governor control valve position that provides fuel flow lower than that required for operation at full speed, no load so that the gas turbine produces a negative torque to prevent overspeeding while maintaining sufficient fuel flow to maintain stable combustion. Typically minimum fuel flow is 50 percent of that for no load steady state operation at 100% speed.

During shutdown the fuel flow is reduced to the minimum fuel flow by setting the gas control valve at its minimum setting. The rotor decelerates slowly to 40 percent speed where fuel is shut off. Fuel flow control is in an open loop mode during the deceleration period.

BEST AVAILABLE DOCUMENT

The fuel control system enables the gas turbine to accommodate a range in fuel gas heating values. Change in heating value of the gas will change the governor droop so there will be a change in the gas turbine interaction with other generation equipment on the utility system. Generally operation will be satisfactory if the gas properties are within the range for stable delivery to the combustors.

BEST AVAILABLE DOCUMENT

VI.4 EFFECT OF KEY FUEL GAS CHARACTERISTICS ON GAS TURBINE OPERATION

4.1 Heating Valve, Specific Gravity and Temperature

Variation of fuel gas characteristics that affect the amount of fuel energy that will pass through a fixed orifice influence the gas turbine operation primarily when it is in open loop fuel control or where the minimum nozzle pressure ratio may cause a resonant variation in energy input. The parameter that expresses the relative fuel energy that will pass through a fixed area orifice at a constant pressure ratio across the orifice is the Wobbe index, if the fuel is in the gaseous phase. The Wobbe index includes two gas characteristics lower heating value and specific gravity plus the gas temperature upstream of the orifice. The Wobbe index is defined by the following equation:

$$WI = \frac{LHV}{(SG \times T)^{0.5}}$$

WHERE:

WI = Wobbe INDEX
LHV = Lower heating value of the fuel (BTU/SCF)
SG = Specific gravity (air = 1.0)
T = Gas temperature at the inlet to the orifice (^{o}R).

BEST AVAILABLE DOCUMENT

Examples for illustrating the effect of Wobbe index variation are:

4.1.1 Ignition

If fuel with Wobbe index lower than the design fuel is used, less energy will pass through the fixed position of the gas fuel control valves and orifices. In the limiting case, ignition will not occur reliably. Conversely, if the Wobbe index is higher than design, excessive energy will enter the gas turbine resulting in excessive temperature rise which reduces the life of hot-gas path parts.

4.1.2 Warmup

If fuel with Wobbe index lower than the design fuel is used, less energy is available and at the limit would be insufficient for stable combustion.

4.1.3 Minimum fuel at rated speed

This is a most critical operating point regarding the variation in heat input from the fuel. Wobbe index lower than design reduces energy input and,

BEST AVAILABLE DOCUMENT

in the limit, will cause loss of flame. Wobbe index increase over design causes increased energy input which at the limit results in (1) inability to control speed in event of loss of load, (2) rotor will not decelerate or will decelerate slowly during the fired part of shutdown (3) the pressure drop across the fuel nozzles will be insufficient for stable fuel delivery to the combustors and (4) there can be a combination of slow deceleration and unstable fuel delivery to the combustors during the fired part of shutdown. The pressure fluctuations resulting from unstable fuel delivery can damage combustors or other parts of the gas turbine in a very short operation period.

4.1.4 Operation at low load

When operating at low load, the fuel requirement for the gas turbine is low. Therefore, the pressure ratio across the fuel nozzles is the lowest that is experienced in the load range. If the Wobbe index is higher than the design value, the pressure ratio across the fuel nozzles will decrease. The limit is

BEST AVAILABLE DOCUMENT

increased Wobbe index that will decrease nozzle pressure ratio to the point that fuel delivery becomes unstable.

When the gas turbine is operating at or near rated speed the minimum pressure ratio across the fuel nozzles is 1.02 to enable stable fuel flow control. At pressure ratios below this value, there is a potential for a resonant oscillation in fuel gas flow that is excited by the pressure variation inside the combustors. The pressure fluctuations resulting from unstable fuel delivery can damage combustors or other parts of the gas turbine in a very short operating time period.

4.2 Liquid Hydrocarbons

Liquid hydrocarbon slugs or mist influence the above considerations and several additional considerations. Hydrocarbon mist carries a very high heat content per unit of system flow area so that excess energy can be supplied during the open loop operation phases. Also, at low load, less fuel gas in the gaseous phase is required resulting in a lower nozzle pressure ratio and potentially unstable fuel delivery.

BEST AVAILABLE DOCUMENT

Liquid hydrocarbon mist has dynamic flow characteristics that are different from fluid in the gaseous phase. Also, they do not burn at the same rate because they must be vaporized prior to burning. Therefore, they may not burn in the combustor reaction zone and cause local high temperature spots on the combustion liners, transition pieces or nozzles. Liquid hydrocarbon slugs cause large quantities of energy to be released in an uncontrolled manner. Liquid slugs can cause hot spots on hot gas path parts, uncontrolled load increases and compressor surge in extreme cases.

4.3 Inert Gases

Inert gases such as carbon dioxide (CO_2) and nitrogen (N_2) in high concentrations can cause combustion instability and high pressure fluctuation in the combustion liners. These inert components tend to make the fuel/air ratio more lean than the design conditions in the combustor reaction zone, thus possibly causing high pressure fluctuation in the liners.

BEST AVAILABLE DOCUMENT

4.4 Liquid Water (Moisture)

Liquid water droplets or mist entrained in the fuel can affect combustion system operation. Water is an inert compound and it has a very high energy absorption capacity because of its high latent heat of vaporization (approximately 1000 Btu/lb) and its high specific heat (1.0 Btu/lb for liquid phase and 0.47 Btu/lb as superheated vapor). Water contamination can reduce combustion stability and cause rapid combustion part wear.

BEST AVAILABLE DOCUMENT

VI-5 GUDDU GAS TURBINE PROBLEMS

The MS-9001E gas turbines at WAPDA Guddu station have experienced the following difficulties:

5.1 Operation on Unfiltered Sui Gas Prior to Modifications

Gas turbine problems discovered during operation in 1985 and 1986 and during inspections in 1986 and early 1987 included the following:

- High rotor vibration while operating at low load and deceleration during shutdown.
- No. 2 bearing material wiping and cracking.
- Compressor discharge case strut cracks.
- Turbine casing cracks (non-structural).
- Fuel gas manifold cracks.
- Compressor blade rubs.
- Combustor transition piece overheating and cracking.
- Turbine gas path high temperature at bucket tips.
- Turbine exhaust insulation pack ballooning.

BEST AVAILABLE DOCUMENT

- Combustion liner deterioration -
    - Discharge spring seal wear
    - Fuel nozzle collar (cap cowl) wear
    - Cross flame tube collar wear
    - Cracks
- Fuel nozzle swirl tip wear.
- Cross flame tube wear.
- Cross flame tube retainer wear.
- Flow sleeve interference with cross flame tube and wear.

5.2 General Electric Evaluation of Problems

The General Electric evaluation of the problems indicated that the primary reasons for the gas turbine parts deterioration was combustion resonance during low load operation and during rotor deceleration in the shutdown sequence and possibly compressor surge. The combustion resonance was evaluated to be caused by insufficient pressure drop across the fuel nozzles because the fuel nozzle flow area was too large for the Sui gas. It was judged that liquid mist in the fuel could aggravate this situation

AVAILABLE DOCUMENT

The failure of the spring seals at the discharge of the combustion liners allowed air to bypass the combustion liner so the temperature of the gas leaving the liner was increased. This distorted the gas path temperature from the normal distribution entering the transition pieces and turbine. This situation was judged to be further aggravated by liquid mist in the fuel gas which tends to distort the gas temperature pattern.

The fuel gas manifold cracks were judged to be caused by the vibration during combustion resonance while operating with nozzle pressure drop too low for stable operation. These cracks were discovered during operation and repaired during forced outages.

The high vibration measured on the No. 2 bearing during the periods of combustion resonance were evaluated to be the probable cause of the No. 2 bearing material wiping or cracking. A second possible cause of this failure was compressor surge resulting from a slug of liquid in the fuel. The cracks in the compressor case struts, turbine casing cracks, compressor blade rubs and turbine exhaust insulation pack ballooning suggest that the machines were subjected to violent operation as would occur during compressor surge.

BEST AVAILABLE DOCUMENT

5.3 Problems Persisting Following Modifications and Fuel Gas Change

Subsequent operation and inspection indicates that many of the problems have been corrected by the gas turbine modifications (paragraph VI-6 below) and fuel gas change (Paragraph VI-7 below). However, several of the problems have persisted. These are:

- Combustion liner deterioration -
  - Discharge spring seal wear
  - Fuel nozzle collar (cap cowl) wear
  - Cross flame tube collar wear
  - Cracks
- Fuel nozzle swirl tip wear.
- Cross flame tube wear.
- Cross flame tube retainer wear.
- Flow sleeve interference with cross flame tube and wear.

The above problems are evaluated preliminarily by GE not to be related to the fuel gas properties. Tests are scheduled to be run in November, 1987 to confirm that the fuel gas properties are not contributing to these problems. Corrective action is being planned which includes the following:

BEST AVAILABLE DOCUMENT

- Spring seals at discharge of combustion liners with increased combustion liners with increased thickness and spring constant. Twelve of these liners have been installed in GT-1.

- Increase in diameter of the cross flame tube hole in the flow sleeve to provide additional clearance.

- Thermal barrier coating on the internal surfaces of transition pieces.

BEST AVAILABLE DOCUMENT

VI-6 GAS TURBINE MODIFICATIONS

The following modifications have been incorporated into the gas turbines to improve their ability to burn the range of fuel gases at Guddu.

6.1 Gas fuel nozzle tips

The gas fuel nozzle tips have been replaced on all gas turbines. The replacement nozzle tips have a reduced flow area. This revision increases the pressure drop across the fuel nozzles so that it will be in the stable range when Sui gas (Wobbe index of 40-47 based on LHV in Btu/scf at 40-100F gas temperature) is burned.

6.2 Compressor IGV Modulation Schedule

The compressor inlet guide vane (IGV) schedule is being modified so that the low flow setting is 50.5 deg. compared to the original 57. The IGV normally is set at the low flow position at low loads and no load from approximately 95% to 100% speed. This reduces the pressure in the combustion liners which increases the pressure drop across the fuel gas nozzle tips so that it will be in the stable range when burning Sui gas which has a high Wobbe index in the range of 40 to 47. This revision is accompanied by a change in the

BEST AVAILABLE DOCUMENT

cooling and sealing air piping such that cooling and sealing air is supplied from the eleventh stage of the compressor rather than the fifth stage when the IGV's are in the low flow position.

6.3 Compressor Bleed Valve Sequence

The compressor bleed valve sequence was modified such that the bleed valves are open during operation at low load, starting and shutdown. This reduces the air flow to the combustion system which reduces the combustion chamber pressure so that the pressure ratio across the gas fuel nozzles is increased.

6.4 Compressor Surge Detector

A compressor surge detector has been installed to identify surge events resulting from hydrocarbon liquid slugs in the fuel gas. An events counter is included to log surge events.

6.5 Automatic Shutdown From Prolongated High Liquid Level in Unit Gas Scrubbers

The protective system originally sounded an alarm on high liquid level in the unit gas scrubbers. This modification will in addition, shutdown the gas turbine if the high liquid level persists for ten minutes.

BEST AVAILABLE DOCUMENT

6.6 Gas Chromatograph

A gas chromatograph is being installed to monitor the gas composition of the following gas streams:

- Fuel Gas to the gas turbines downstream of the mixing station
- Mari gas at inlet to mixing station
- Sui gas at inlet to mixing station
- Kandhkot gas at inlet to mixing station

The chromatograph monitors the gas composition and includes a computer which calculates the heating value, specific grafity and Wobbe index. A digital readout is provided locally and the signals will be transmitted to the combined cycle control system for monitoring and logging in the central control room. The information provided will indicate the range of properties related to stable combustion system operation and the potential for condensing additional liquids if the gas pressure or temperature are reduced.

BEST AVAILABLE DOCUMENT

VI-7 FUEL GAS CHANGE

By agreement between WAPDA and GE the fuel gas was changed to exclude the use of Sui gas in the gas turbines, since it was believed to be contributing to the gas turbine problems. This change was made in April, 1987 and subsequently only Mari or a mixture of Mari and Kandhkot gas has been fired. This change was made generally concurrently with the installation of gas turbine modification. These have improved the operation.

Procurement is in progress of a fuel gas heater to increase the gas temperature to 120oF(49oC) or 20oF superheat. This will reduce the lighter liquid hydrocarbon liquids (pentane and lighter) and decrease the Wobbe index range. The installation of the liquid scrubber system upstream of the fuel gas heater is recommended in this report to remove the heavier hydrocarbon liquids.

When the recommendations in this report have been implemented and the work in progress has been completed, the Sui gas restriction should be withdrawn. At that time all of the WAPDA fuel gases will be satisfactory for firing in the gas turbines at Guddu.

BEST AVAILABLE DOCUMENT

VII . SIGN-OFF SHEET

The GUDDU Combined Cycle Power Plant Gas Fuel Study Team having complied with the scope of work as delineated in the Charter dated June 13, 1987 do hereby document their acceptance of their findings, conclusions and recommendations of the report by appending their signatures to the Final Report.

Lewis E. Hussain,	WAPDA Consultant
Franklin Parker,	Independent Consultant
Leroy O. Tomlinson,	General Electric
Lloyd Winsor,	Gibbs & Hill, Inc.

BEST AVAILABLE DOCUMENT

APPENDIX - TAB

BEST AVAILABLE DOCUMENT

APPENDIX 1

DOCUMENTS SUPPORTING REPORTS OF LIQUIDS IN GAS FUEL

This appendix contains the following correspondences pertaining to the subject:

Telex	P.W. Lenning	to	S.D.I. Reimers	dated Feb. 6, 1986
Telex	P.W. Lenning	to	C. Blue	dated Feb. 13, 1986
Telex	P. W. Lenning	to	J.J. Jimenez	
Letter	W.W. Liphardt	to	H. C. Gerber	dated Feb. 14, 1986
Telex	F.P. Rossitto	to	W.W. Liphardt C. Blue	dated Feb. 14, 1986
Telex	S.D.I Riemers	to	M.C. Moseley	dated Feb. 17, 1986
Telex	A.E. Staedeli P.W. Lenning	to	Lal Gahni	
Telex	C. Blue	to	H.C. Gerber	dated March 17, 1987

BEST AVAILABLE DOCUMENT

++++SUS DUP, ++

6710505GEGASTUW
44431 ZELIN PK

#
44431 ZELIN PKY
3336
1553 02/06 04903380 BLDG404.0001
-BASHIR PATEL ZELIN LTD
-PAKISTAN

MSG SB174
REF: PWL-GDU-[illegible]
DATE: 6 FEBRUARY 1984

RE GUDDU GT FUEL GAS [illegible]. WE HAVE BEEN ADVISED BY OUR SITE PEOPLE THAT LARGE [illegible] LIQUIDS ARE FLOWING THROUGH THE FUEL GAS SUPPLY LINES TO THE EXTENT THAT SCRUBBERS SUPPLIED BY US HAVE AN ALMOST CONSTANT BLOWDOWN AND THE AREA AROUND THE SCRUBBERS HAS BEEN SATURATED WITH THE EFFLUENT.

AS WE HAVE STATED [illegible] TIMES CONCERNING THE FUEL GAS SUPPLY, THE SCRUBBERS ARE NOT [illegible] NOR DESIGNED TO REMOVE LARGE, MAIN-LINE SLUGS OF LIQUID. THEY ARE TO PROTECT THE TURBINES FROM CONDENSATED, ETC. THAT MAY ACCUMULATE IN THE LINE FROM THE REDUCING STATION TO THE SCRUBBER. ANY LIQUIDS THAT MIGHT GET PAST THE SCRUBBERS DUE TO THIS VAST QUANTITY COULD CAUSE HARM TO THE TURBINE.

IT IS OUR CONCERN THAT EQUIPMENT UPSTREAM OF THE REDUCING STATION FOR REMOVING THESE LIQUIDS MAY NOT BE OPERATING PROPERLY OR MAY BE NON-EXISTENT. PLEASE INVESTIGATE AND ADVISE US PROMPTLY OF THE STATE OF THIS UPSTREAM EQUIPMENT.

REGARDS

ORIG SDI REIMERS GIBBS AND HILL LAHORE PAKISTAN
WIRE CC: JJ JIMENEZ GIBBS AND HILL NEW YORK NY
LAL GHANI WAPDA [illegible]ISTAN
HC GERBER GIBBS AND HILL PAKISTAN
BASHIR PATEL ZELIN LTD PAKISTAN
RV LINTON DE LAVAL PAKISTAN
C BLUE DECO GUDDU PAKISTAN
HC GERBER GIBBS AND HILL PAKISTAN

MCC: FP ROSSITER, WW LINHARDT, MD LIVINGSTON, HJ O'BRIEN

PAUL W LEHNING TXPD GENERAL ELECTRIC CO

BLDG 50[illegible]

A1-1 BEST AVAILABLE DOCUMENT

7716 GEGUD PK
3515
1230 02/13 04754983 ALDG2522.0002
-C BLUE DECO, GUDDU PAKISTAN

MSG SB291

REF: PWL-GDU-T170
DATE: 13 FEBRUARY 1995

RE: FUEL GAS SUPPLY TO LOTS 1A AND 1B. WE HAVE BEEN ADVISED BY OUR SITE PEOPLE THAT THE FUEL GAS SCRUBBERS PROVIDED BY US ARE PRESENTLY DISCHARGING [illegible] GALLONS OF EFFLUENT PER 24 HOURS. THIS IS LIKELY THAT THE SCRUBBERS ARE REMOVING FROM THE FUEL GAS AS IT PASSES TO THE GAS TURBINE. IT SHOULD BE NOTED THAT THIS AMOUNT OF EFFLUENT IS FROM UNIT 1 ONLY AND IS POTENTIALLY VOLATILE. AT THE PRESENT TIME THE GROUND AROUND THE LOT 1B GAS SCRUBBERS IS SATURATED WITH THE EFFLUENT TO THE POINT THAT IT HAS SEEPED UP INTO THE MANHOLES IN THE AREA.

IN AN ATTEMPT TO BE ABLE TO KEEP UNIT 1 RUNNING, OUR SITE PEOPLE HAVE CONSTRUCTED A TEMPORARY HOLDING TANK TO KEEP FROM FURTHER SATURATING THE GROUND. THIS NOW CREATES A FURTHER PROBLEM, THAT OF DISPOSING OF THE COLLECTED EFFLUENT.

IT IS THE OPINION OF THE GENERAL ELECTRIC CO THAT THIS SITUATION IS POTENTIALLY DANGEROUS TO BOTH THE EQUIPMENT AND PERSONNEL. AS WE HAVE PREVIOUSLY ADVISED, [illegible] OF LIQUIDS THAT MIGHT GET PAST THE SCRUBBERS AND INTO THE TURBINE WILL MOST LIKELY DESTROY THE TURBINE BUCKETS AND NOZZLE ASSEMBLIES. ALSO, COLLECTION OF THE EFFLUENT WITH NO SAFE MEANS OF DISPOSAL IS DANGEROUS TO PERSONNEL WORKING ON THE SITE. THEREFORE IT IS OUR OPINION THAT THIS SYSTEM SHOULD CEASE TO BE OPERATED UNTIL THE PROPER PROVISION IS MADE TO REMOVE THE LIQUIDS FROM THE GAS FUEL SYSTEM UPSTREAM OF THE REDUCING STATION. ANY DAMAGE TO EQUIPMENT OR PERSONNEL RESULTING FROM THIS POTENTIALLY DANGEROUS SITUATION IS THE RESPONSIBILITY OF WAPDA.

IT IS OUR UNDERSTANDING THAT WAPDA IS PRESENTLY WORKING ON TO RECONNECT OUR FUEL GAS LINE TO THE DOWNSTREAM SIDE OF THE FILTERING STATION THAT EXISTS FOR THE STEAM PLANT. AFTER THIS RECONNECTION IS MADE, THE GAS TURBINES COULD BE RETURNED TO SERVICE PROVIDED THE FILTERING STATION REMOVES THE LIQUIDS TO A LEVEL SUITABLE FOR OUR SCRUBBERS TO SEPARATE [illegible].

PLEASE [illegible] BEST AVAILABLE DOCUMENT

148

DOMINION ENGINEERING COMPANY LIMITED

0/11, 7 Zam Zama Street,
Defence Housing Authority
Phase-6, Karachi-6
Phone : 53 31 48
53 32 93
Telex : 26487 CC - Pk

Lahore :
Phone : 304778 - 304782
304799
Telex : 44783 GE DE PK

GENERAL ELECTRIC

400 - MW COMBINED CYCLE POWER PROJECT
GUDDU - KASHMORE - PAKISTAN.

Site :
Phones:
Office (071) 02039
(0731) 3163 / Local 261
Guest House (0731) 3153 / Local 250
Telex : 7716 GEGUD PK

DATE 14 Feb 86

cc: P. Rossiter
P. Lehning
C. Blue
File: 1.1.2

Gibbs & Hill Inc.
Site Office,
GUDDU.

Attn : Mr. H.C. Gerber

Letter No. GH-283

Sub : LOT 1A AND 1B - GAS SCRUBBER SYSTEM

Dear Sir,

Because of Gas Scrubber blowdown liquids in filtration to manhole "5B" a gas blowdown tank of 20" Ø x 16 feet long has been installed at Gas Turbine Unit # 2.

Similar tanks will be installed at Units Nos. 1, 3 and 4 in the near future.

As previously discussed, we request that WPADA is being made aware of this added tank and that WAPDA is being informed to make arrangements to empty-out the blowdown liquids on a regular basis.

Please convey to WAPDA that the liquids are extremely flamable and that extreme care must be taken during the empty-out operation and consequent disposal of the liquids.

Very truly yours,

W. W. LIPHARDT

BEST AVAILABLE DOCUMENT

149

7718 GEGUD PK3
7718 GEGUD PK38
SCHENECTADY NY USA 2/14/86

WILLI LIPHARDT/C. BLUE
GUDDU SITE
PAKISTAN

LOCAL COPIES TO: V.A. BLANDO, R.V. PARKS, T.G. [illegible], P.M. ROHR,
W.G. RUSSELL, [illegible] STAFFORD(GTS), P.W. LEHNING,
RAPIFAX COPY: W.P. MEEHAN, [illegible]

FPR/038

SUBJECT: IAMESO PERSONNEL RESTRICTIONS
UNIT OPERATION WITH FUEL GAS
EXCESSIVE LIQUID CONTENT

THIS TELEX IS TO CONFIRM IAMESO MANAGEMENT POSITION RELATIVE TO PARTICIPATION IN THE OPERATION OF THE GAS TURBINES UNDER THE PRESENT CONDITION OF HIGH LIQUID CONTENT IN THE FUEL GAS. THIS CONDITION HAS RESULTED IN THE EXISTENCE OF [illegible] ALLY HAZARDOUS CONDITIONS TO BOTH EQUIPMENT AND PERSONNEL, AND ACCORDINGLY UNACCEPTABLE FROM A SAFETY STANDPOINT.

ACCORDINGLY, ALL IAMESO PERSONNEL ARE TO IMMEDIATELY REFRAIN FROM ANY INVOLVEMENT WITH THE OPERATION OF THE GAS TURBINE AS LONG AS THIS CONDITION REMAINS.

YOU ARE ADDITIONALLY TO SUBMIT A LETTER TO GIBBS & HILL AND WAPDA SITE MANAGEMENT CONFIRMING THAT IAMESO PERSONNEL ARE NOT AUTHORIZED TO PARTICIPATE IN THE OPERATION OF THE UNIT OR ENTER THE IMMEDIATE AREA OF HAZARD UNTIL SUCH TIME AS SAFE CONDITIONS EXIST. I WOULD ALSO SUGGEST YOU DISCUSS WITH WAPDA THE INTERIM USE OF DIESEL FUEL TO PERMIT CONTINUANCE OF START UP AND COMMISSIONING TESTING.

REGARDS,
F.P. ROSSITER
GETSCO/IAMESO

BEST AVAILABLE DOCUMENT

ROSSTSCO SCH

150

GE GASTURB SCH

02230725#
44776 GHPAK PK
DATE: FEBRUARY 17, 1[illegible]

ATTENTION: MR. M.C. MOSELE[illegible] CHIEF
OFFICE OF E[illegible]
USAID, ISLAMAB[illegible]

COPY: MR. WASEEM CH. [illegible]ECT MANAGER
OFFICE OF E[illegible]
USAID, ISLAMAB[illegible]

TELEX COPY: MR. LAL GHANI/[illegible]DIRECTOR
GUDEU 450 MW [illegible] GUDDU

TELEX COPY: MR. J.J. JIMENE[illegible] [illegible]ECT OFFICER
GNH, NEW [illegible]

TELEX COPY: MR. H.C. GERBER/[illegible]RUCTION MANAGER
GIBBS AND HILL [illegible], GUDDU

TELEX COPY: MR. P.W. LEHN[illegible] [illegible]ECT MANAGER
GENERAL ELECTRIC [illegible]PANY
SCHENECTADY, NEW [illegible]K

TELEX COPY: MR. C BLUE, DEC[illegible],
GUDDU

MAIL COPIES: 1. MR. LAL GHANI/[illegible]ECT DIRECTOR
450 MW [illegible], [illegible]
2. MR. NAZIM SI[illegible] [illegible]/CHIEF ENGINEER (THERMAL DEV.)
WAPDA HOUSE, [illegible]
3. MR. KHAWAJA D[illegible] [illegible]ENERAL MANAGER (THERMAL)
WAPDA HOUSE, [illegible]
4. MR. R. [illegible] [illegible]ATIONAL EXECUTIVE
GENERAL ELECTR[illegible]MPANY,
LDA PLAZA, LA[illegible]

FROM: MR. S.D.I.REIMERS/[illegible]ECT MANAGER
GNH, LAHORE

LOG NO: T-3572-221

BEST AVAILABLE DOCUMENT

151

SUBJECT: GUDDU 45[illegible]
LOT 1A/1B GAS [illegible] AND ACCESSORY EQUIPMENT
TEMPORARY SHUT[illegible] UNITS

REFERENCES: 1. TELEX T-[illegible] DATED FEBRUARY 16, 1986
2. TELEX T-[illegible] DATED FEBRUARY 17, 1986
3. WAPDA TE[illegible] NO.1[illegible] DATED FEBRUARY 22,1986

THIS IS A FURTHER REPORT [illegible] SITUATION AT GUDDU SITE RELETIVE TO THE PRESENCE OF [illegible] SUI GAS AND ITS IMPACT UPON GAS TURBINE OPERATION AND [illegible] SAFETY.

DURING A MEETING AT GUDDU [illegible] FEBRUARY 18, 1986 BETWEEN WAPDA, GNH AND G. E. REPRESENTATIVES [illegible] ATTER REITERATED THEIR POSITION THAT:

1. FLAMMABLE [illegible] IN THE SUI GAS AND CARRIED OVER FROM THE GAS [illegible] COULD DAMAGE THE GAS TURBINE COMBUSTION CHAMBERS [illegible] BLADES.

2. A CONDITION HAZARDOUS TO PERSONNEL EXISTS BECAUSE OF FLAMMABLE EFFLUENT [illegible] CHARGED INTO THE GROUND FROM THE GAS SCRUBBERS.

GNH ADVISED THAT THE [illegible] FOR DAMAGE TO THE TURBINES MUST BE CONSIDERED NOT PROVEN [illegible] CAN BE DEMONSTRATED THAT THE GAS LIQUID SCRUBBERS ARE [illegible] BEYOND THEIR DESIGN CAPABILITY., G.E. ADVISED THAT THEY [illegible] HAVE SCRUBBER DESIGN DATA TO HAND BUT HAD REQUESTED G.E. [illegible] IN SCHENECTADY TO TELEX THIS INFORMATION TO PAKISTAN.

THE MEETING WAS RECONVENED [illegible] FOLLOWING DAY WITH WASEEM CHOUDHRY OF USAID ALSO ATTENDING. [illegible] FOLLOWING INFORMATION WAS PRESENTED AT THIS MEETING:

A. DURING AN EIGHTEEN [illegible] PERIOD ENDING EARLIER THAT DAY AN AMOUNT OF LIQUID EFFLUENT TO A DISCHARGE RATE OF 133 GALLONS PER DAY OR [illegible] GALLONS PER HOUR WAS DISCHARGED FROM THE GAS TURBINE [illegible] NO. 1 SCRUBBER. THE GAS TURBINE WAS OPERATING [illegible] ESSENTIALLY BASE LOAD DURING THIS PERIOD.

B. DATA RECEIVED OVER [illegible] TELEX FROM THE UNITED STATES INDICATED A GAS SCRUBBER [illegible] DESIGN LIQUID REMOVER CAPACITY OF 700 GALLONS PER HOUR.

BEST AVAILABLE DOCUMENT

152

C. AN ANALYSIS OF THE SCRUBBER EFFLUENT BY WAPDA INDICATED 100 PERCENT HYDROCARBONS AND [illegible] WATER.

D. THESE IS LIQUID IN MANHOLE [illegible] NO. 5A CLOSE TO THE UNIT NO.1 GAS SCRUBBER. [illegible] IN THE MANHOLE INDICATED THE PRESENCE OF FLAMMABLE [illegible].

FROM ITEMS A AND B ABOVE [illegible] THAT THE SCRUBBERS WERE OPERATING AT A SMALL FRACTION [illegible] DESIGN CAPACITY AND THAT LIQUID CARRYOVER WHICH COULD [illegible] DAMAGE TO THE GAS TURBINE COULD BE EXCLUDED. IT IS [illegible] THAT A PROPER SCRUBBER EFFLUENT COLLECTION SYSTEM [illegible] HAVE BEEN PROVIDED. DISCHARGE OF EFFLUENT THROUGH A GRAVE[illegible] THE GROUND HAD RESULTED IN A SITUATION PREJUDICIAL TO [illegible] OF PERSONNEL.

THE FOLLOWING AGREEMENTS [illegible] THE MEETING ON FEBRUARY 19:

1. G.E. WOULD PROCEED IMMEDIATELY TO CLEAN UP MANHOLE NO. 5 AND OTHER AREAS WHERE FLAMMABLE LIQUID OR VAPOR COULD CREATE A SAFETY HAZARD. IT SHOULD BE NOTED THAT WAPDA HAD DISPUTED G.E'S POSITION THAT A HAZARDOUS SITUATION EXISTS. HOWEVER LATTER ADVISED THAT WAPDA SURVEYS HAD INDICATED THE PRESENCE OF FLAMMABLE [illegible] EXPLOSIVE CONCENTRATIONS.

2. FOLLOWING CLEAN-UP G.E. [illegible] IMMEDIATELY REASSUME ACTIVITIES INVOLVING UNIT NO. [illegible] TO PERFORM SSS CLUTCH VIBRATION TESTS ON UNIT NO. [illegible].

3. WAPDA WOULD PROVIDE A [illegible] EFFLUENT COLLECTION TANK TO BE PLACED AT A LOCATION [illegible] FROM THE SCRUBBERS. G AND H WOULD DETERMINE THE TANK LOCATION IN CONJUNCTION WITH WAPDA. G.E. WOULD PIPE UP THE [illegible] EFFLUENT DISCHARGES TO THE COLLECTION TANK.

GIBBS AND HILL GUDDU SITE [illegible] THAT CLEAN-UP ACTIVITIES BY GENERAL ELECTRIC ARE PROCEEDING VERY SLOWLY AND THAT THERE IS NO ACTIVITY BY G.E. ON UNIT NO. [illegible]. A COPY OF THIS TELEX GE/DECO GUDDU IS:

I. INSTRUCTED TO EXPEDITE THE CLEAN-UP ACTIVITIES AND ADVISE BOTH WAPDA AND GIBBS AND HILL OF THEIR PROJECTED SCHEDULE FOR COMPLETING SAID ACTIVITIES.

II. ADVISE WAPDA AND GIBBS AND HILL OF THEIR REASONS FOR NOT PERFORMING ANY WORK ON UNIT NO. [illegible] EVEN AT LOCATIONS REMOTE FROM MANHOLE NO. 5A.

BEST AVAILABLE DOCUMENT

III. ADVISE WAPDA AND GIBBS [illegible] OF THEIR PROJECTED SCHEDULE FOR RESTART OF UNIT NO. [illegible] CLUTCH VIBRATION TESTING.

A RETURN TELEX REPLY BY [illegible] ABOVE IS REQUESTED.

MR. LAL GHANI OF WAPDA [illegible] THE ABOVE AS RESPONSIVE TO HIS TELEX, [illegible] LAL GHANI IS ALSO ADVISED THAT G.E. PROVIDED [illegible] FEBRUARY 25, 1986 FOR THE START OF THE UNIT [illegible] ABILITY RUN DURING OUR PROJECT COORDINATION MEETING [illegible]. G.E. CANNOT COMMIT TO AN ICO DATE FOR UNIT NO. [illegible] IS DEPENDENT UPON THE OUTCOME OF THE CLUTCH VIBRAT[illegible] G.E. SHOULD COMMIT A DATE FOR THE INITIATION OF THE [illegible] AND HAVE BEEN ASKED TO DO SO BY COPY OF THIS TELEX, [illegible] ABOVE.

REGARDS

S.D.I.REIMERS
PROJECT MANAGER

GE GASTURB SCH
MMM

BEST AVAILABLE DOCUMENT

+ From GE
44776 GHPAK PK
GE GASTURB SCH
MSG TZ234
SDI REIMERS GIBBS AND HILL
LAHORE PAKISTAN

RUSH DELIVERY

AAA. REFERENCE P.W. LEHNINGER'S TELEX PWL-GGU-T178 DATED 2/13/86 ORIGINAL TO G AND H NY COPY TO YOU WARNED OF POTENTIALLY DANGEROUS SITUATION IN CONNECTION WITH THE FUEL GAS BEING SUPPLIED TO UNIT 1.

BBB. WE UNDERSTAND THAT IN SPITE OF THE WARNINGS TO WAPDA FROM GE, WAPDA HAS DECIDED TO CONTINUE OPERATION OF UNIT 1.

WE BELIEVE A HAZARDOUS SITUATION EXISTS DUE TO THE DISCHARGE OF LIQUID GAS EFFLUENT FROM THE FUEL GAS SCRUBBERS AND THE RESULTING DISPERSEMENT OF HAZARDOUS LIQUIDS AND EXPLOSIVE VAPORS.

CCC. THESE UNITS ARE NOT [illegible] NOT TO BE OPERATED UNDER SUCH HAZARDOUS CONDITIONS. [illegible] INSTRUCTED ITS PERSONNEL AND THOSE OF ITS AFFILIATES [illegible] STAND CLEAR OF THE OPERATING UNITS UNTIL SUCH TIME AS THE [illegible] ARE BROUGHT TO A SHUT-DOWN, SAFE CONDITIONS.

THE TEMPORARY MEASURES TAKEN [illegible] SCRUBBER UNITS TO COLLECT THE LIQUIDS IS NOT CONSIDERED [illegible] ADEQUATE FOR CONTINUOUS OPERATION AS THIS IS ONLY A TEMPORARY [illegible] REQUIRING CONTINUOUS MONITORING TO ASSURE THE VESSEL IS NOT [illegible] FILLED OR PRESSURIZED.

DDD. THE UNITS ARE NOT TO BE [illegible] OPERATED UNTIL THE FUEL GAS SUPPLY TO THE GAS SCRUBBERS CAN BE [illegible] INTO SPECIFICATION, THE VAPOR PROBLEM FROM OIL [illegible] DISSIPATED, AND ADEQUATE PROVISION IS MADE TO ASSURE [illegible] VAPOR IS NOT REINTRODUCED INTO THE MANHOLES. PROPER [illegible] OF THE LIQUID GASOLINE EFFLUENT IS ESSENTIAL TO MAINTAINING [illegible] CONDITIONS ONCE ESTABLISHED.

BEST AVAILABLE DOCUMENT

EEE. IN ADDITION TO THE [illegible] PERSONNEL HAZARD, OVERLOADING OF THE UNIT GAS SCRUBBER[illegible] THE UNIT TO SERIOUS DAMAGE FROM LIQUID GASOLINE CARR[illegible] THE FUEL SYSTEM. THIS CAN CAUSE EXTENSIVE DAMAGE T[illegible] HOT GAS PATH PARTS (COMBUSTION CANS, TRANSITION PIECES, T[illegible] NOZZLES, TURBINE BUCKETS, AND EXHAUST PARTS. OPERATI[illegible] SUCH CONDITIONS OF LIQUID GASOLINE CARRY-OVER VOI[illegible]TY. WAPDA WILL BE SOLELY RESPONSIBLE FOR ANY PROPE[illegible] OR PERSONALIDAJY

YFLARISING

OUT OF THE OPERATION OF [illegible] UNDER SUCH CONDITIONS.

REGARDS

ORIG TO: LAL GHANI WAPDA [illegible]
WIRE TO: JJ JIMENEZ GE[illegible] NEW YORK NY
SDI REIMERS, [illegible] LAHORE PAKISTAN
BASHIR PATEL [illegible] PAKISTAN
RV LINTON GE [illegible] PAKISTAN
C BLUE DECO [illegible] PAKISTAN
HC GERBER GE[illegible] PAKISTAN
NAZIM SIDDIQUI [illegible] (THERMAL), PAKISTAN
C MOSELEY CHIEF [illegible] E AND E US AID ISLAMAHAD PAKISTAN

MCC TO: FP ROSSITER, [illegible], MD LIVINGSTON, HJ O'BRIEN, JL STAFFORD

A.E. STAEDELI/PW LEHNING
GENERAL ELECTRIC CO.
TLX 145354

GE GASTURB SCH.

BEST AVAILABLE DOCUMENT

44753 GE DE PK
7718 GEGUD I

DT: 17 MAR 86

ATTN: H.C. GERBER
CC : C. MOSELY
R.V. LINTON
[illegible] REIMERS
P. LEHNING
LAL GHANI
F.P. ROSSITER
A.K. SIDDIQUE
N. SIDDIQUE
SUB : GAS CONDENSATE PROBLEM [illegible] C.C. POWER PLANT

AA) ON THE MORNING [illegible] GAS TURBINES NOS. 1, 2 AND 3 WERE TRIPPED FROM [illegible] TO GAS SUPPLY PROBLEM. AT APPROXIMATELY 11.00 [illegible] HAD BEEN DISCHARGING INTO THE AIR FROM UNIT 2 CONDENSATE [illegible] TANK. INVESTIGATION SHOWED THAT THE FISHER CONTROLLER [illegible] THE DISCHARGE HAD BEEN TAMPERED WITH AND ADJUSTED TO [illegible] THE VALVE COULD NOT CLOSE. A LARGE AMOUNT OF [illegible] DISCHARGED INTO THE TANK TO THE POINT THE TANK WAS [illegible] AND THE OPEN VALVE WAS ALLOWING 300 POUND GAS TO BLOW [illegible] OUT OF THE TANK. AFTER STOPPING THE FLOW OF GAS IT WAS [illegible] A RUBBER HOSE HAD BEEN PUT ON THE DRAIN OF THE TANK AND [illegible] DISCHARGED INTO THE GROUND APPROXIMATELY 50 FEET [illegible] TANK. UNITS 1 AND 3 CONTROLLERS WERE FOUND TO HAVE BEEN [illegible] AND UNIT 3 TANK WAS ALSO FULL OF LIQUID. SINCE [illegible] HAVE NOT BEEN ACCEPTED BY WAPDA NO CHANGES SHOULD [illegible] CONTROL SETTING MADE BY OUR PERSONNEL.

BB) IT IS OBVIOUS AFTER [illegible] THAT A LARGE SLUG OF LIQUID PASSED DOWN THE GAS [illegible] WAS DIRECTLY OR INDIRECTLY INVOLVED IN THE UNITS TRIPPING [illegible] THE SAME TIME WAPDA WAS HAVING GAS PRESSURE CONTROL PROBLEM. [illegible] OPERATIONS GROUP WAS ATTEMPTING TO REMOVE THE LIQUID [illegible] ABOVE PROCEDURE RATHER THAN PUTTING THE LIQUID [illegible].

CC) SINCE I WAS NOT [illegible] THE LIQUID PROBLEM I CAN ONLY ASSUME AN ATTEMPT WAS BE[illegible] THE FACT THAT A SLUG OF LIQUID PASSED DOWN THE PIPELINE.

DD) CONSIDERING ALL [illegible] PROBLEMS WITH LIQUID DISCHARGE INTO THE GROUND AND OUR [illegible] OF THE AREA I FIND IT UNBELIEVABLE THAT SOMEONE [illegible] ADDITIONAL LIQUID IN THE AREA.

EE) WE HAVE TRIED TO [illegible] CONCERN FOR SAFETY BUT IT IS OBVIOUS FROM THE ABOVE [illegible] IT IS NOT BEING TAKEN SERIOUSLY.

WE CONSIDER SAFETY A PRIMARY [illegible] ON ANY JOB AND IF ANY FUTURE ACTIONS ARE TAKEN TO [illegible] PERSONNEL OR EQUIPMENT I WILL HAVE NO CHOICE BUT TO [illegible] PERSONNEL FROM THE JOB SITE.

REGARDS
CHARLES BLUE
GUDDU PAKISTAN

A1-11 BEST AVAILABLE DOCUMENT

127

PLEASE ENSURE WAPDA UNDERSTANDS THE DANGERS INVOLVED WITH CONTINUED OPERATION OF THE FUEL GAS SUPPLY SYSTEM IN ITS PRESENT CONDITION.

REGARDS

ORIG: JJ JIMENEZ GIBBS AND HILL NEW YORK NY
WIRE CC: SDI REIMERS GIBBS AND HILL LAHORE PAKISTAN
MR LAL GHANI WAPDA PAKISTAN
BASHIR PATEL ZELIN [illegible] PAKISTAN
RV LINTON GE LAHORE PAKISTAN
C BLUE WEGO [illegible] PAKISTAN
HC GERBER GIBBS [illegible] PAKISTAN
NAZIM SIDDIQUI CHIEF ENGINEER (THERMAL)
PAKISTAN
C MOSELEY CHIEF OFFICE OF E AND E US AID
ISLAMABAD

PAUL W LEHNING TMPD GENERAL ELECTRIC CO

BLDG 500
6710505GEGASTUB
7718 GECUD PK

VIA WUI Q

BEST AVAILABLE DOCUMENT

158

APPENDIX 2

DOCUMENTS SUPPORTING MARI GLYCOL LOSSES

This Appendix contains the following correspondence pertaining to the subject.

Letter to The Project Director - Guddu,
from The Resident Engineer, - Guddu, dated September 5, 1987

Letter to The Resident Engineer - Guddu
from Mr. Nasrullah, dated September 22, 1987

Letter to L. J. Munder from Lal Ghani, dated September 28, 1987

Letter to Lal Ghani from L. J. Munder dated October 1, 1987

Letter to Lal Ghani from L. J. Munder dated October 6, 1987

BEST AVAILABLE DOCUMENT

OFFICE OF THE
RESIDENT ENGINEER
450 MW COMBINED CYCLE
PLANT GUDDU

[illegible]/012/97/ 05 /05/1997

The Project Director,
450 MW Combined Cycle Project,
Guddu

Subject:- [illegible]

We are having higher consumption of glycol at dehydration plant because of the fluctuation of gas flow from Kari field.

It will be quite useful if two units of glycol filters/scrubbers are added at the inlet of dehydration plant and outlet of dehydration plant. This will help us in maintaining the proper quality of gas as well as loss of Wapda will be reduced to minimum and in this way we will be saving lot of money to Wapda.

The matter is urgent and you are requested to kindly take up this work from the project as no such funds are available in this office for [illegible] this work.

RESIDENT ENGINEER

c.c.to:

1. The General Manager (Thermal) Wapda House Lahore.
2. The Chief Engineer (Thermal) TPS, Guddu.
3. S/[illegible] Lahore.
4. S/[illegible] Site Office, Guddu.
5. [illegible]
6. [illegible]

A2-1 BEST AVAILABLE DOCUMENT

160

U.F.-86

Water And Power Development Authority

Telephone: 301208

Telegram: THERMALCHIEF

Office of the
General Manager Thermal
Wapda, Wapda House, Lahore.

No. GMTH/Chem-30/ 3 0 9 6 9

Date 22 /9/1987.

The Resident Engineer
Combined Cycle Project
Guddu.

Subject:- [illegible]

Ref: Your letter No. [illegible]/012/87/3457, dated 5-9-1987 addressed to Project Director Guddu with a copy to this office.

We understand that the Raw Mari Gas is completely dry and does not require dehydration. Under these conditions it is not advisable to operate the Glycol Contacting Tower and as such should be kept as standby. Only scrubbers should be operated for the removal of mechanical impurities or condensate.

(NASRULLAH) 22.9.87.
Director Chemical (Thermal)
for General Manager (Thermal)

C.C.

1. The Chief Engineer Thermal, TPS Wapda, Guddu.
2. The Project Director Combined Cycle Project Guddu.

BEST AVAILABLE DOCUMENT

161

U.F.-36

Water And Power Development Authority

Telephone: _____

Telegrams: _____

Office of
The Project Director,
450 MW Combined Cycle
Power Project, Guddu.

No. PD/CPG/ECO/37/5878-80

Date 28.9.1987

The Gibbs & Hill Inc.,
Site Office,
Guddu.

Atten: Mr. J.Munder.

Subject: DEHYDRATION PLANT AT MARI.

Copy of Director Chemical (Thermal) WAPDA Lahore's letter No. GMTH-Chem [illegible]-86 dated 22.9.1987 is enclosed herewith. According to his recommendations Mari gas dry and dehydration is therefore not required. Glycol Contacting Tower according to him is to be kept standby. Will you please comment on the recommendations of the Director Chemical WAPDA.

Enc: As above.

(LAL GHAN) 28/9
PROJECT DIRECTOR

cc: C.E.Thermal, Guddu.
cc: R.E. 450 MW CCP: Guddu.
cc: Director Chemical (Thermal) WAPDA,O/O the G.M.Thermal, Wapda, Lahore.

BEST AVAILABLE DOCUMENT

162

L-3572-GW-3886
Oct. 01, 1987

WAPDA
450 MW Combined Cycle Project
Guddu

Attention: Mr. Lal Ghani, Project Director

Subject: Guddu 450 MW Combined [illegible] Project
Recovery of Glycol [illegible] Plant

References: Your letter No. [illegible] dated Sept. 07, 1987 alongwith Mr. Sanejo's letter [illegible]C/PA/012/87/3457 dated Sept 05,1987.

Dear Mr. Lal Ghani

We have reviewed your [illegible] the attachment and our comments are as follows :

1. In case water content [illegible] the incoming Mari gas are more than specified in the [illegible] then the Glycol consumption will be more than anticipated.

   It is suggested that [illegible] company shall be advised of this situation as [illegible] provide adequate water separation device at the [illegible] to bring incoming gas moisture contents within [illegible] limit, which will reduce the Glycol consumption.

   We agree with your [illegible] In case WAPDA is losing excess amount of [illegible] in the pipeline, then a filter scrubber arrangement [illegible] down-stream side of the Dehydration Plant [illegible] Glycol from the gas stream. Similar arrangement [illegible] fields where filters are installed on the [illegible] Dehydration Plant.

Very truly yours
GIBBS & HILL, INC.

[illegible]
J.J. MUNDER
CONSTRUCTION MANAGER

CC: Mr. N.A. Sanejo — WAPDA/Guddu
Mr. S.D.I. Reimers — G&H Lhr
Mr. Saleem Paracha — G&H Guddu
Mr. M. Ashraf — G&H Guddu
File

A2-1 BEST AVAILABLE DOCUMENT

163

L-3572-GW-3905
Oct. 06, 1987

WAPDA
450 MW Combined Cycle Project
Guddu

Attention: Mr. Lal Ghani, Project Director

Subject: Guddu 450 MW Combined Cycle Project
Dehydration of Mari Gas

Reference: Your letter No. [illegible] 5878-81 dated Sept. 28, 1987 forwarding copy of [illegible] letter No.GMTH-Chem/10/20964-66 dated Sept. 22, 1987.

Dear Mr. Lal Ghani

There seems to be considerable [illegible] to the dryness (or lack of same) of MARI GAS.

On the one hand we have a [illegible] from Mr. Samejo's group requesting additional scrubbing capacity at the Mari end. The WAPDA Mari Operators complain that the Dehydrator is [illegible] too much glycol.

Offsetting this, is the [illegible] cited above which advises that we should shut down the Glycol [illegible] Tower. This in effect means the shutting down of the complete [illegible] plant. This assumption here is that Mari gas from the Mari Field [illegible] dry.

Since the writer was [illegible] installation of the Mari pipeline and its auxiliaries, [illegible] considerable time at the Mari Field discussing their [illegible] like to point out some salient factors observed and [illegible]:

1. Mari gas at the [illegible] passes through a "knock-out" drum before it reaches [illegible]. This "knock-out" drum removes considerable [illegible] from the gas stream; however it does not remove [illegible] entrained water. This became very evident to Mari [illegible] had to inject a corrosion inhibitor into the [illegible] supplying to Fauji Fertilizer and the Exxon [illegible]. [illegible] inhibitor is manufactured by Exxon and is [illegible].

   Its' main purpose [illegible] against the acid being formed by the combined [illegible] Mari has plenty) and the remaining moisture [illegible]. The combination was having a corrosive effect [illegible] to the adjacent Fertilizer Plants and "[illegible]" [illegible] developing at the bottom portions of the lines. This [illegible] through their respective "knock-out" drums, [illegible].

BEST AVAILABLE DOCUMENT

P.O. BOX 11, GUDDU BARRAGE, KASHMORE PAKISTAN TEL. 0731-87838 (0731) 3179 TELEX : 7706 GHGUD KK.

164

We were contemplating obtaining the inhibitor if there was going to be an extended delay in completing the dehydration plant, which fortunately did not occur.

2. All pipelines, [illegible] at present serving Guddu pass through some [illegible] condensation after passing through "knock-out" drums.

3. We are going to forward the relevant documents to our Fuel Consultants in N.Y. [illegible] their comments.

In the meantime, we strongly recommend, that we keep utilizing the dehydration plant, pending a decision from our Fuel Consultants.

Very truly yours
GIBBS & HILL INC.

J.J. MUNDER
CONSTRUCTION MANAGER

cc: Mr. M.A. Samejo — WAPDA/Guddu
Mr. S.D.I. Reimers — GH/Lhr
Mr. R.L. Shaver — GH/Guddu
Mr. Ashraf — GH/Guddu
File

BEST AVAILABLE DOCUMENT

APPENDIX 3

FUEL GAS HEATER LIQUID SCRUBBER QUOTATIONS

This Appendix contains the following quotations pertaining to the subject.

Peerles Manufacuring Company dated October 16, 1987

Perry Equipment Manufacaturing Corporation dated October 20, 1987

BEST AVAILABLE DOCUMENT

PEERLESS MFG. CO.

DESIGNERS • FABRICATORS •

POST OFFICE BOX 20857
DALLAS, TEXAS 75220
AREA CODE 214
TELEPHONE 357-6181
TELEX 073-2345
2811 WALNUT HILL LANE

October 16, 1987

Gibbs & Hill
11 Penn Plaza
New York, New York 10001-2059

Attention: Mr. Lloyd Winsor

Subject: Your letter dated September 15, 1987
Peerless Dry Scrubber
Guddu 450 MW Combined
Cycle Power Plant
Water & Power Development Authority
Pakistan

Your Ref: G & H Job No. 3572-834

PMC New Ref: D/87-0881

PMC Old Ref: S/O 35764

G.E. P.O. #: A87-SSB047618-D

A) Performance Guarantee:
Liquid Removal -
Particles 10 microns and larger in size - 100% efficiency.

As per your letter, the industrial guarantee which Peerless also warrants regarding liquid removal is as follows: The exit gas will contain no more than 1/10 gallon of liquid per MMSCF of gas passed through the separator.

B) Gas Conditions (Operating):
Pressure - 305 PSIG
Temperature - 120 degrees F.
Flow - 101,000 #/Hr. Max. 81,800 #/Hr. Normal
Specific Gr. - 0.72 (Mark Design)

1. Maximum Liquid Loading @ maximum flow - 64 GPM (100%)

2. Maximum Liquid Loading @ normal flow - 70 GPM (80.9%)

3. Maximum Liquid Loading @ minimum flow - (58,050 #/Hr.) - 72 GPM

NOT ORIGINAL DOCUMENT

767

C) The liquid loading is directly related to the gas capacity. As the gas capacity increases, the liquid loading decreases, therefore, the maximum quantity of liquid would be at minimum recommended flow.

All the above are considered to be steady state rates and should not be considered as slugging conditions (instantaneous volumn of liquid) even if slug volumn is less than rated liquid loading.

D) Based on slugging conditions, the design provided would achieve a 90% removal (minimum) of the entering slug up to approximately 200 GPM. Above 200 GPM the performance would slowly start reducing.

The above is without consideration regarding the liquid dump capability.

E) Flooding the cyclone is possible and would occur during a slug. As mentioned above, the efficiency would be reduced when occured, even though there is sufficient storage below the cyclones.

F) The dump system supplied having a [illegible] PSI differential pressure could flow approximately 45 GPM.

Peerless would like to point out, that for slugging conditions we have designed separators with the same internals having an inlet knock-out chamber similar to our model [illegible] (Vertical Gas Separators) capable of handling excessive larger volumes of liquids or slugs.

G) Internals:
The subject separators have [illegible] - 4.5" cyclone tubes in each scrubber.

H) As mentioned above in paragraph "F" concerning our recommendations, Peerless would recommend our Vertical (Slug/Catcher) Dry Scrubber per attached sketch.

The cyclone tubes are recommended because solids, liquids and sludge are the contaminants, which otherwise would require a Filter/Separator. The cyclone design eliminates the maintenance of filter change-out and provides a performance within the requirement of the subject gas turbines.

Based on the specifications provided within your letter, the size required would be a 60" I.D. X 14'-3" Cm/Sm Slug/Catcher Dry Scrubber. Estimated price (excluding accessories) each F.O.B. Dallas, Texas ----- $35,000.00.

If you need any additional information, please feel free to contact us.

Very Truly Yours,
PEERLESS MFG. CO.

Don Schultz
Application Engineer

vkl

BEST AVAILABLE DOCUMENT

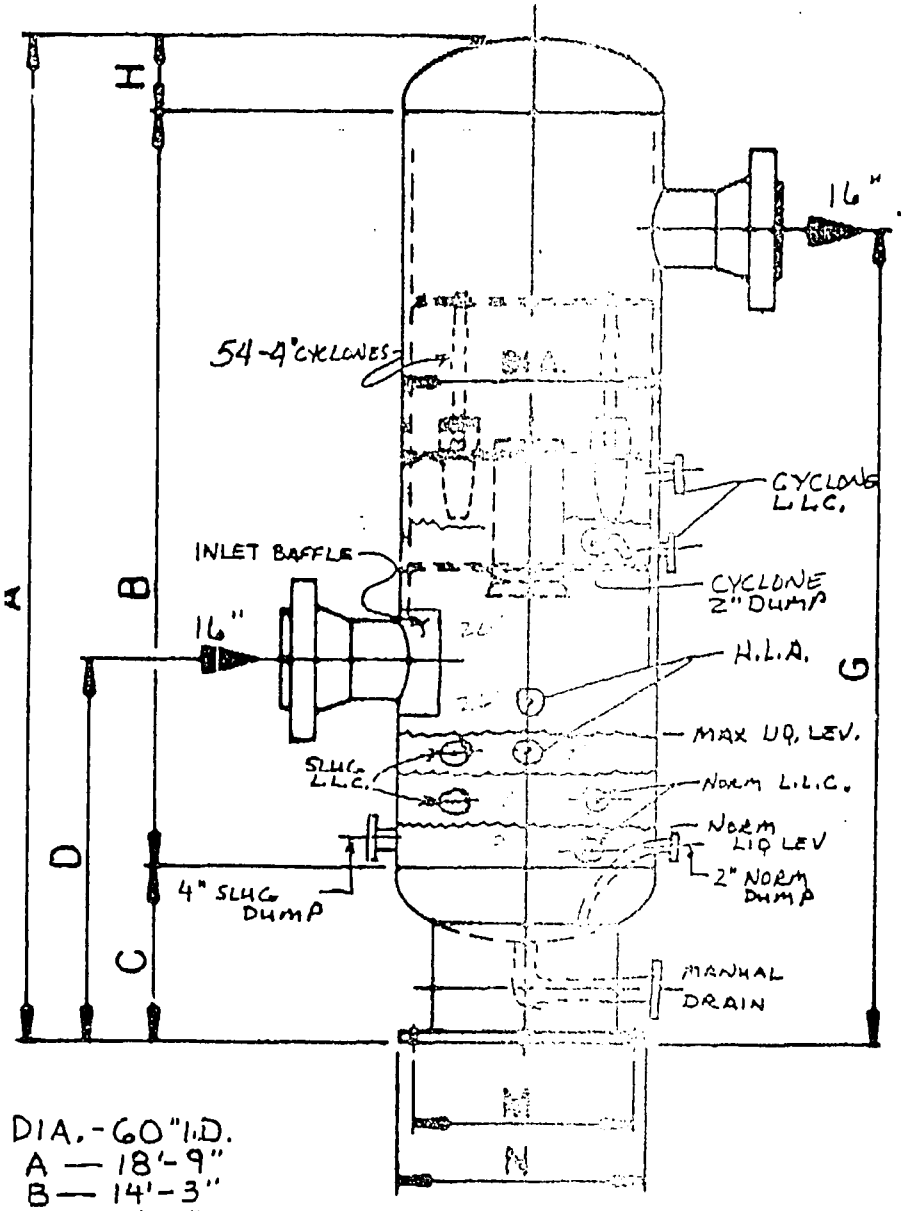

DIA. - 60" I.D.
A — 18'-9"
B — 14'-3"
C — 3'-0"
D — 8'-0"
G — 16'-0"
M — 4'-9½"
N — 5'-0"
H — 1'-6"

ELEVATION

DESIGN LIQUID LOADING (SLUG) - 900 GPM

* ADEQUATE ΔP FOR LIQ. DISCHARGING.

BEST AVAILABLE COPY

Perry Equipment Corporation
P.O. Box 640
Mineral Wells, Texas 76067
Telephone: (817) 325-2575
Telefax: (817) 325-4622
Telex: 75-8343
TRT: 163127

QUOTATION

NUMBER Q9-87-15J
PAGE 1 OF ~~10~~

TO: Gibbs & Hill, Inc.
11 Penn Plaza
New York, NY 10001

DATE: October 20, 1987

YOUR REF: Guddu Power Plant, Pakistan

ATTN: Mr. Lloyd Winsor

COPIES TO: Pakistan Engineering Services

QUOTATION SUBJECT TO CONDITIONS ON REVERSE SIDE OF THIS SHEET

In accordance with your inquiry, we are pleased to present our formal quotation for two (2) PECO filter separators designed to operate at the following process conditions:

PRESSURE	300 PSIG
TEMPERATURE	40-80 DEGREES F.
GAS FLOW RATE	1,000-190,000 SCFM
GAS MOLECULAR WEIGHT	18.771-20.940
GAS SPECIFIC GRAVITY	0.648-0.723
LIQUID	LIQUID HYDROCARBONS, WATER, TEG
SPECIAL CONDITIONS	THE VESSEL IS DESIGNED TO REMOVE: 1. SOLIDS, INCLUDING RUST, SCALE, SAND, AND CLAY. 2. LIQUIDS, INCLUDING SLUGS.

MODEL:

Two (2) PECO 75H-74-372-54-400-WP horizontal filter separators as shown generally in enclosed Bulletin No. 5 and special drawing. This drawing is not to be used for piping purposes.

APPROXIMATE DIMENSIONS:

Shell: 54" I.D. x 142" Seam/Seam

Liquid Sump: 20" O.D. x 142" Seam/Seam

Overall: 190" Length x 87" Width x 130" Height

APPROXIMATE WEIGHT: 35,000 Pounds each Net

BEST AVAILABLE COPY

F.O.B. MINERAL WELLS, TEXAS · TERMS: NET 30 DAYS

MKT 1073 · 10/85 · HPI 1M

PERFORMANCE:

Vessel is designed to remove 98% of all solid particles and liquid droplets one (1) micron and larger from the gas stream with an overall removal efficiency of 99.95% by weight, assuming normal distribution of particle sizes, when operated within its rated flow. Vessel is designed to have a maximum pressure loss with clean elements of 2.0 PSI flange to flange. PECO recommends that the filter elements be replaced when the differential pressure across the dirty elements reaches 12-16 PSI.

Vessel is designed with the following non-standard features to satisfy the customer's requirements for this application:

1. PECO Model FG372 filter elements, which double the filtration surface area over standard size Model FG336 elements, to lengthen the useful element life.

2. Oversized horizontal sump with increased liquid holding capacity for handling slugs of liquid.

3. Oversized downcomers between each stage of vessel and its sump compartment for handling slugs of liquid.

4. 16" manway on vessel second stage to facilitate inspection and clean-out.

5. Full sump diameter 20" blind flanges on both sump compartments to facilitate clean-out.

6. 304 SS element risers and vane to resist internal corrosion.

7. All instrument connections are flanged to facilitate removal of valves and control instruments for inspection and service.

8. Both liquid control valves are isolated and by-passed, so they can be removed and serviced without shutting down the vessels.

9. Both drains include block valves.

10. Block valves on vessel inlet/outlet are included.

11. As an option, isolation valves are quoted for both liquid level controllers, both high level switches, both liquid level gauges, and the relief valve, so these instruments can be removed and serviced without shutting down the vessels.

12. As an option, block valves are quoted for both vents.

BEST AVAILABLE COPY

DESIGN:

Vessel to be constructed of carbon steel, designed, fabricated, and stamped in accordance with latest edition of ASME Section VIII Division 1 pressure vessel code and NACE Standard MR-01-75 for 400 PSIG and 100 Degrees F. with 1/8" corrosion allowance. Vessel also stamped with an ASME Code Stamp on stainless steel nameplate.

MATERIALS:

SHELL: SA516 Gr. 70

HEAD: SA516 Gr. 70N 2:1 Elliptical

SUMP: SA106 Gr. B

FLANGES: SA105N

FITTINGS: SA234 Gr. WPB

FORGINGS: SA105N

TUBESHEET: SA283 Gr. C

VANE BOXING: SA283 Gr. C

VANE: 304 SS

RISERS: 304 SS

SADDLES: SA283 Gr. C

BOLTS/NUTS: SA193 Gr. B7/SA194 Gr. 2H

O-RING: BUNA-N

GASKETS: FLEXITALLIC 'CG'

EXTERNALS:

Vessel has lifting lugs.

BEST AVAILABLE COPY

INTERNALS:

Internals to consist of seventy-four (74) first stage PECO Model FG372 high efficiency molded fiberglass filter coalescer elements (4 1/2" O.D. x 72" Length), with a total filtration area of 523 Ft2, and a second stage PECO high efficiency vane mist eliminator.

ELEMENT ACCESS:

Access to the first stage filter coalescer elements to be by means of a full vessel diameter PECO 54" ID 400 PSIG quick opening closure, complete with a hinge and a heavy duty safety device to prevent opening while under pressure.

Access to the second stage vane to be by means of a 16" 300# ANSI RF blind flange manway, complete with a hinge.

Access to both sections of the horizontal sump to be by means of two (2) 20" 300# ANSI RF blind flanges, one (1) at each end, complete with hinges.

BEST AVAILABLE COPY

CONNECTIONS:

Inlet/Outlet: (2) 20" 300# ANSI RF Flanges

Sump Clean-Outs: (2) 20" 300# ANSI RF Flanges with Blind Flanges and Hinges

Manway: (1) 16" 300# ANSI RF Flange with Blind Flange and Hinge

Relief Valve: (1) 8" 300# ANSI RF Flange

Level Control Valves: (2) 2" 300# ANSI RF Flanges

Drains: (3) 2" 300# ANSI RF Flanges

Hydro Drain: (1) 2" 300# ANSI RF Flange

Level Controllers: (4) 1 1/2" 300# ANSI RF Flanges

Level Switches: (4) 1" 300# ANSI RF Flanges

Vents: (2) 1" 300# ANSI RF Flanges

Pressure Gauges: (2) 1" 300# ANSI RF Flanges

Level Gauges: (4) 3/4" 300# ANSI RF Flanges

DP Gauge: (2) 1/2" 300# ANSI RF Flanges

Any change to the above connections schedule may result in a change of quoted price.

TESTING:

Pricing includes full radiograph per RT-1, Brinnell hardness, and hydrostatic testing at 600 PSIG.

PAINTING:

Pricing includes white metal sandblast per SSPC-SP-5-63 to external surfaces and one (1) coat Carbozinc 11 primer.

DOCUMENTATION:

Pricing includes three (3) copies of data/documentation/drawings.

BEST AVAILABLE COPY

COMMERCIAL:

PRICE EX-WORKS MINERAL WELLS, TEXAS	$71,390.00 each
EXPORT SKIDDING AND WATERPROOF PREPARATION	$ 1,140.00 each
APPROXIMATE SHIPPING WEIGHT	37,000 Pounds each Gross
APPROXIMATE SHIPPING CUBAGE	1,498 Cubic Ft each
APPROXIMATE SHIPPING DIMENSIONS	196" L x 93" W x 142" H

REPLACEMENT PARTS:

FG372 Elements	$ 29.00 each
54" ID Buna-N O-Rings	$ 74.00 each

PECO recommends one (1) set of spare parts per vessel, including 74 elements and one (1) closure o-ring per set, for startup/commissioning and two (2) sets of spare parts per vessel for each year of operation. Price does not include Export Crating and Freight.

PRICE EX-WORKS MINERAL WELLS, TEXAS	$2,220.00 each set

AUXILIARY CONTROL EQUIPMENT:

Two (2) sets auxiliary control equipment as described in attached Addendum A. Pricing includes factory hookup and disassembly.

PRICE EX-WORKS MINERAL WELLS, TEXAS	$ 47,365.00 each set
EXPORT CRATING	$ 810.00 each set
APPROXIMATE SHIPPING WEIGHT	6,895 Pounds each set Gross
APPROXIMATE SHIPPING CUBAGE	192 Cubic Ft each set

BEST AVAILABLE COPY

OPTION:

At customer's option, PECO offers isolation valves for Liquid Level Controllers, High Liquid Level Switches, Liquid Level Gauges, and Relief Valve to facilitate removal of listed instruments for inspection and service. PECO also offers block valves on the Vents with this option.

Two (2) sets isolation and block valves as described in attached Addendum B. Pricing includes factory hookup and disassembly.

PRICE EX-WORKS MINERAL WELLS, TEXAS	$ 5,675.00 each set
EXPORT CRATING	$ 155.00 each set
APPROXIMATE SHIPPING WEIGHT	855 Pounds each set Gross
APPROXIMATE SHIPPING CUBAGE	22 Cubic Ft each set

FREIGHT:

INLAND FREIGHT: FOB VESSEL, HOUSTON, TEXAS	$ 2,910.00 total
TOTAL PRICE FOB HOUSTON, TEXAS	$244,320.00
WITH OPTION	$255,980.00

PAYMENT TERMS:

Payment terms to Gibbs & Hill are net 30 days in U.S. Dollars for the full amount of the order, payable upon shipment ex-works Mineral Wells, Texas.

Payment terms to WAPDA are irrevocable letter of credit in U.S. Dollars for the full amount of the order, payable at sight upon delivery F.O.B. Port of Houston, Texas and presentation of documents.

WARRANTY:

PECO warrants these products for twelve (12) months from date of installation or eighteen (18) months from date of shipment, whichever comes first.

BEST AVAILABLE COPY

DELIVERY SCHEDULE:

DRAWINGS : Three (3) weeks ex-works after receipt of order.

EQUIPMENT: 12-14 weeks ex-works after receipt of final approved fabrication drawings and resolution of all customer changes to specifications.

VALIDITY:

Quotation is valid for three (3) months from this date, and prices are firm for duration of contract.

Thank you for the opportunity to quote on this equipment and we hope to have the pleasure of serving you. Should you have any questions concerning any phase of this quotation, please contact us.

Best regards,

Elwood M. Vogt

Elwood Vogt
International Sales Manager

km

Encs.

cc: R. Franklin Parker, P.E.
10 Coralvine Court
The Woodlands, TX 77380

BEST AVAILABLE COPY

AUXILIARY CONTROL EQUIPMENT

ADDENDUM A

Qty.	Description
2	Fisher 2500-249B Liquid Level Controller with external float cage, 3" x 14" long SS float, K-Monel torque tube, 67AFR Low Pressure Regulator, 1 1/2" 300# ANSI RF Flanges, per NACE.
2	Fisher 126PT Liquid Level Control Valve diaphragm type, with 2" 300# ANSI RF Flanges, per NACE.
2	Fisher 2901-279V High Liquid Level Switch with Alarm, 1" 300# ANSI RF Flanges, per NACE.
2	Penberthy 1RL6 Liquid Level Gauge Glass reflex type, with (2) 330 Gauge Valves, 3/4" 300# ANSI RF Flanges, Illuminator, per NACE.
2	Ashcroft 1379 Pressure Gauge with MF&S NV-FF-50 1/2" NPT Needle Valve, per NACE.
1	Midwest 120-SA-00-MA Differential Pressure Gauge with Follower Pointer, Reed Switch, 1000TR Reed Switch Power Relay, Riley Panalarm Horn Alarm with Manual Reset Switch, (2) MF&S NV-FF-25 1/4" NPT Needle Valves, per NACE.
1	Anderson Greenwood 27310888 Relief Valve with 8" 600# ANSI RF Flange inlet, (2) 8" 150# ANSI RF Flange outlets, per NACE.
8	Kitz K300SCTBM 2" 300# ANSI RF Flange Ball Valve with full bore, per NACE, to isolate and bypass Control Valves and as Drain block valves.
2	Kitz GK300SCTC 20" 300# ANSI RF Flange Ball Valve with reduced bore, per NACE, for Inlet/Outlet block valves.

BEST AVAILABLE COPY

AUXILIARY CONTROL EQUIPMENT

ADDENDUM B
OPTIONAL

Qty.	Description
1.....	Kitz K300SCTBM 8" 300# ANSI RF Flange Ball Valve with full bore, per NACE, to isolate Relief Valve.
4.....	Kitz K300SCTBM 1 1/2" 300# ANSI RF Flange Ball Valve with full bore, per NACE, to isolate Level Controllers.
6.....	Kitz K300SCTBM 1" 300# ANSI RF Flange Ball Valve with full bore, per NACE, to isolate High Level Switches and as Vent block valves.
4.....	Kitz K300SCTBM 3/4" 300# ANSI RF Flange Ball Valve with full bore, per NACE, to isolate Level Gauges.

BEST AVAILABLE COPY

JOB NO.: 89-87-15J
CUSTOMER:
SUBJECT: 75H-74-372-54-400-WP CUSTOM

PERRY EQUIPMENT CORPORATION
Manufacturers
MINERAL WELLS, TEXAS

PAGE NO.: 1 of 1
CALC. BY: MBL DATE: 10-21-87
CHECKED BY: DATE:

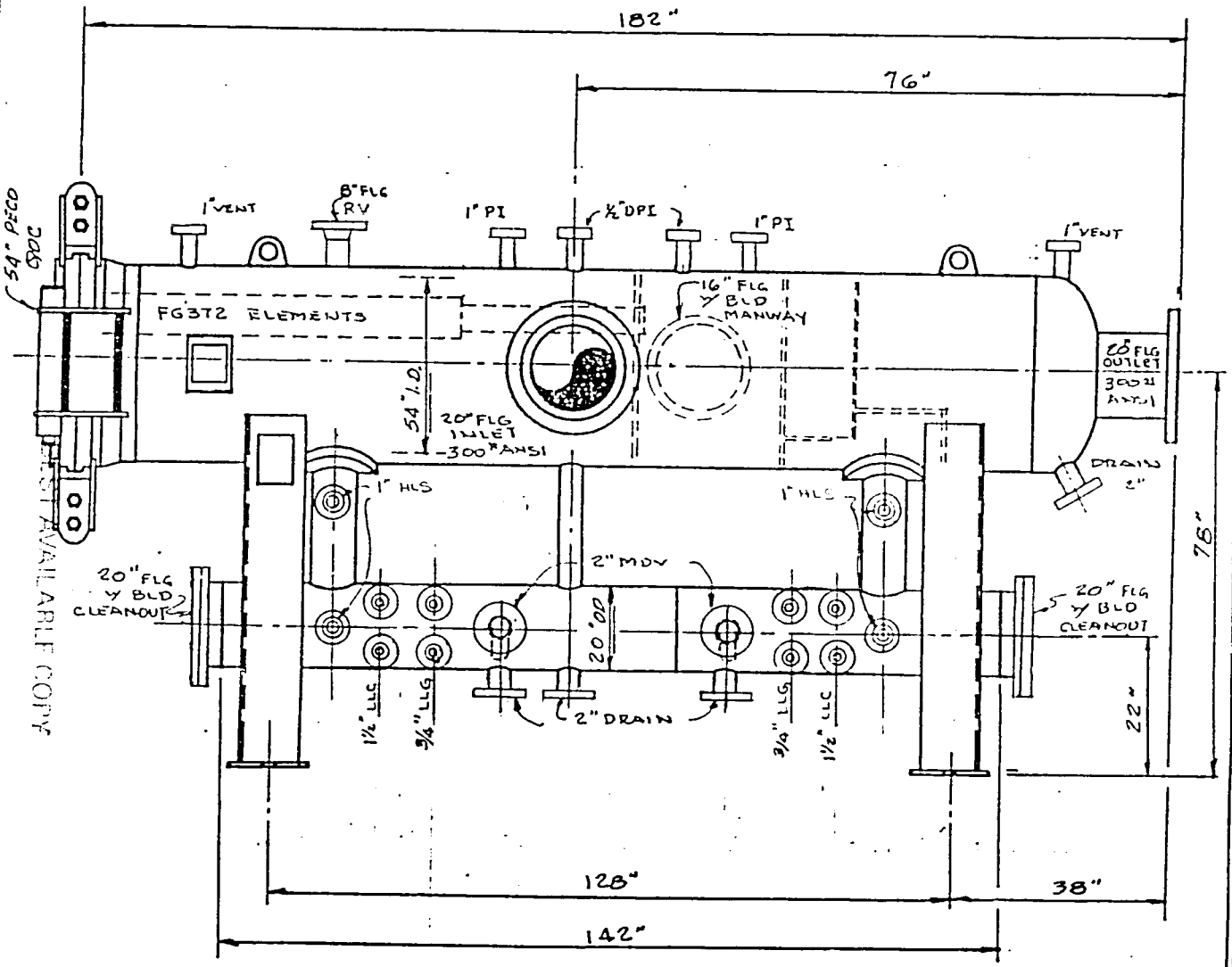

BEST AVAILABLE COPY

150