PN-ABU-871
94653

PAKISTAN
WATER AND POWER DEVELOPMENT AUTHORITY

EXPERIMENTAL IMPROVEMENTS OF KAREZES

by

MUHAMMAD MUNIR
MUHAMMAD AKRAM KAHLOWN

IRRIGATION SYSTEMS OUTSIDE THE INDUS BASIN
SUB PROJECT OF
IRRIGATION SYSTEMS MANAGEMENT RESEARCH PROJECT
GOVERNMENT OF PAKISTAN - USAID PROJECT
PLANNING DIRRECTORATE (SOUTH) P & I WAPDA

NOVEMBER, 1988

بِسْمِ اللّٰهِ الرَّحْمٰنِ الرَّحِيْمِ

•

اَنَّا صَبَبْنَا الْمَآءَ صَبًّا ﴿٢٥﴾

ثُمَّ شَقَقْنَا الْاَرْضَ شَقًّا ﴿٢٦﴾

فَاَنْۢبَتْنَا فِيْهَا حَبًّا ﴿٢٧﴾

کہ ہم نے ڈالا پانی اوپر سے۔

پھر چیرا زمین کو پھاڑ کر۔

پھر اگایا اس میں اناج۔ (القرآن) عبس

AND WE POURED WATER IN SHOWERS
AND OPENED THE EARTH IN CLEFTS
AND CAUSED THE GRAIN TO GROW THEREIN.

ACKNOWLEDGEMENT

Contribution of M/S James. A Bondurant, Dr. Larry King, Eugene Doering and Dr. Gilbert Corey of Us Aid advisors in reviewing the draft report and furnishing useful comments/suggestions is grately acknowledged.

Assistance provided by Mr. Muhammad Khalil, Junior Economist in preparing the chapter on preliminary economic evaluation of various improvement techniques is highly acknowledged.

Assistance provided by Mr. Arif Saleem, Junior Engineer in putting together the report is also acknowledged.

Efforts made by Mr. Syed Ahmad, Junior Engineer and Saeed Ahmad, Sub Engineer in the collection of field data deserve special appreciation.

In the end, services of Mr. Anees Ahmad, Stenographer Grade-II in typing the report are highly acknowledged.

CONTENTS

Sr.No.	Description.	Page
CHAPTER-1	**INTRODUCTION**	1-1
1.1	Background	1-1
1.2	Bench Mark Survey	1-2
1.3	Karez Irrigation and Problems	1-3
1.4	Study Areas	1-3
CHAPTER-2	**EXPERIMENTAL IMPROVEMENTS**	**2-1**
2.1	Improvement Techniques	2-1
2.2	Details of Experimental Improvements	2-1
2.3	Design of Caps	2-11
2.4	Design of Artificial Recharge Works	2-13
2.5	Cost Estimate	2-13
CHAPTER-3	**MONITORING & EVALUATION**	3-1
3.1	Monitoring of Installed Lids	3-1
3.2	Monitoring of Hand Bored Wells	3-2
3.3	Monitoring of Recharge Trials	3-2
CHAPTER-4	**ECONOMIC EVALUATION**	4-1
4.1	Introduction	4-1
4.2	Methodology	4-1
4.3	Results of Analysis	4-5
4.4	Secondary Impact of Improvements	4-5

LIST OF TABLES

Sr.No.	Description	Page
2.1	Data on Traditional Capping of Well	2-4
2.2	Discharge Measurement Data from Khanozai Karez	2-10
2.3	Conveyance Loss Measurements in Watercourses of Abdul Hakim Karez.....	2-12
3.1	Monthly Precipitation at Samungli	3-3
3.2	Discharge Measurement Data - Khanozai Karez	3-4
4.1	Cash Flow Statement - Karez Capping.....	4-8
4.2	Cash Flow Statement - Boring Inside Karez Wells	4-9
4.3	Cash Flow Statement - Reservoir for Karez Recharge	4-10
4.4	Cash Flow Statement - Gabion Bund for Karez Discharge	4-11
4.5	Present Worth of Benefits Karez Capping	4-12
4.6	Present Worth of Benefits - Hand Percussion Boring	4-13
4.7	Present Worth of Benefits Recharge Through Reservoir	4-14
4.8	Present Worth of Benefits Recharge Through Gabbion Bund	4-15

Cont'd....

LIST OF TABLES

Sr.No.	Description	Page
4.9	Present Worth of Costs - Karez Capping.....	4-16
4.10	Present Worth of Costs - Hand Percussion Boring.....	4-17
4.11	Present Worth of Costs - Recharge Through Reservoir	4-18
4.12	Present Worth of Costs - Recharge Through Gabion Bunds.....	4-19
4.13	Net Present Value and Benefit Cost Ratio	4-20

LIST OF PLATES

Sr.No.	Description	Page
1.1	Cross Section of a Karez.....	1-4
1.2	Location Map for Location of Karez.....	1-5
2.1	Profile Survey of Karez Tunnel	2-5
2.2	Strip Survey of Abdul Hakim Karez.....	2-6
2.3	Layout of Pipe Irrigation System at Abdul Hakim Karez.....	2-14
2.4	Cross Sections of Improved Watercourses.....	2-15
2.5	Karez Cap Type-C (Badly Eroded).....	2-18
2.6	Design of Karez Lid	2-19
2.7	Study Layout for Recharge Works at Kurram Manda	2-20
2.8	Design of Gabion Bund.....	2-21
2.9	Study Layout for Recharge Trials at Jungle Bundat Karez.....	2-24
2.10	Design of Earthen Reservoir - Jungle Bundat Karez.....	2-25
3.1	Piezometer Location for Recharge Site at Abdul Hakim Karez - Panjpai.....	3-6
3.2	Location of Piezometers at Jungle Bundat Karez.....	3-7
3.3	Typical Piezometers	3-8

LIST OF ANNEXURES

Sr.No.	Description	Page
1-1	Research Plan for Karez Irrigation System	A-1
1-2	Conclusions and Research Needs	A-4
2-3	Design of Low Head Gabion Bund in Kurram Manda	A-6

EXPERIMENTAL IMPROVEMENTS ON KAREZES IN BALUCHISTAN

CHAPTER-1

INTRODUCTION

1.1 BACKGROUND

There is a wide variety of irrigation systems that exist outside the Indus Basin. These systems are especially important in Baluchistan, because only a small part of the Province is served by the Indus irrigation system. These traditional irrigation systems were developed over centuries to suit the local topographical and environmental conditions. The systems are also important as these have fulfilled the needs of disposed population.

Irrigation Systems Outside the Indus Basin, Sub-project of ISMR aims at characterizing and understanding the working of these indigenous irrigation systems with a view to identify the improvement needs and to design appropriate interventions to improve performance and productivity of these systems. In view of the importance of karez irrigation in Baluchistan, the system was taken up for detailed study with the folowing objectives.

1. To determine the status of physical conditions and improvement needs of karezes.

2. To investigate techniques of curbing and capping access wells to prevent erosion.

3. To investigate alternate methods of cleaning of karezes.

4. To investigate methods of lining of karez tunnels.

5. To investigate methods of making a permanent infiltration section of the karez.

6. To investigate water table control measures to increase karez flow.

Detailed Study plan to conduct research on the aforementioned aspects of Karez Irrigation was prepared and is attached as Annexure 1-1.

The report presents the work done, so far on various improvement techniques to address the main problems associated with karez irrigation system.

1.2 BENCH MARK SURVEY

To collect bench mark data on the existing performance of karez irrigation system, 13 karezes were selected at random in Quetta, Pishin, Ziarat and Kalat Districts of Baluchistan. The survey covered several aspects of karez irrigation such as techniques used to identify potential locations of karezes, how karezs are constructed and maintained, construction and maintenance costs, flow rates, water losses, water sharing patterns, area irrigated, cropping patterns, production levels and problems and improvement needs, etc. The results of the survey have been evaluated and a seperate report on the findings has been issued. The conclusions of this survey are attached as Annexure 1-2. This report also presents the future research needs which include the following.

1. Investigate and develop techniques, materials and methods for karez tunnel lining.

2. Develop procedures for increasing the discharge of a karez by increasing the artificial recharge.

3. Develop a digital model of the groundwater system around a karez.

4. Experimental capping of karez wells to determine its effect on cleaning frequency and maintenance costs may be undertaken.

5. Hand boring in karez wells to determine its effect on karez discharge where the hydraulics permits need to be undertaken.

6. Long term monitoring of discharge of selected karezes should be undertaken for developing the pattern of variation in karez flow.

7. Setting up meteorological stations for collecting the hydromet data at selected karezes would be beneficial to correlate the effect of rain on karez discharge.

8. Practical methods need to be developed for measuring the losses in the karez tunnels.

9. High value crops are required to be included in the existing cropping patterns.

In addition to the above recommendations, the survey will provide a sound base for evaluation of post improvement performance of karezes.

1.3 KAREZ IRRIGATION AND PROBLEMS

A typical karez consists of a yielding well (generally called the mother well) and a series of open wells connecting an underground tunnel through which the water is delivered to the agricultural lands. The karez benchmark survey conducted in selected valleys of Baluchistan, has indicated that the depth of the mother-well is seldom more than 100 ft. and the number of open wells in a karez averages 34. These wells are used for light, ventilation and removal of excavated material. The average discharge from karezes ranges between 0.5 cfs. to 3.0 cfs. Most of the karezes have a discharge of less than 2.0 cfs. The karez survey has indicated that maintenance and fluctuation in discharge are the primary concerns of the karez owners who depend on karez irrigation systems for economic survival. The schematic diagram of a karez irrigation system is shown on Plate 1-1. There are two principal problems associated with karez irrigation system:

1. The depletion of aquifers resulting in reduced discharge.

2. High maintenance costs due to erosion of the open wells and sloughing of the karez tunnel.

1.4 STUDY AREAS

For testing the proposed interventions, three karezes in Punjpai, Khanozai and Jungle Bundat Valleys were selected. These karezes are located within radius of 100 miles and are easily accessible by metaled and shingle roads. The farmers of the area expressed their willingness to cooperate with the project officials in testing the proposed improvements on their karezes. The selection of these karezes was also supported by the fact that the beneficiaries of these karezes do not plan to switch over from karez irrigation to tubewell irrigation. They appear to be convinced of the benefits of karez irrigation. The location of these karezes is shown on Plate 1-2.

PLATE 1-1

CROSS- SECTION OF -A- KAREZ

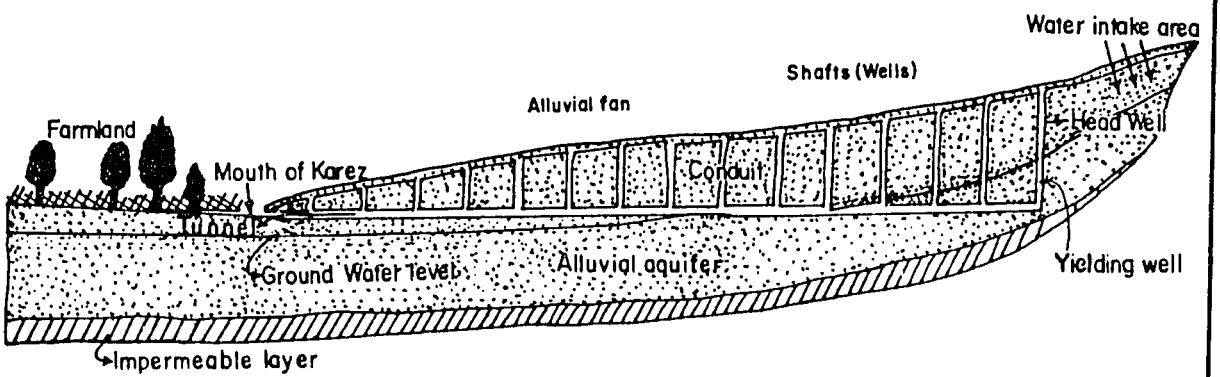

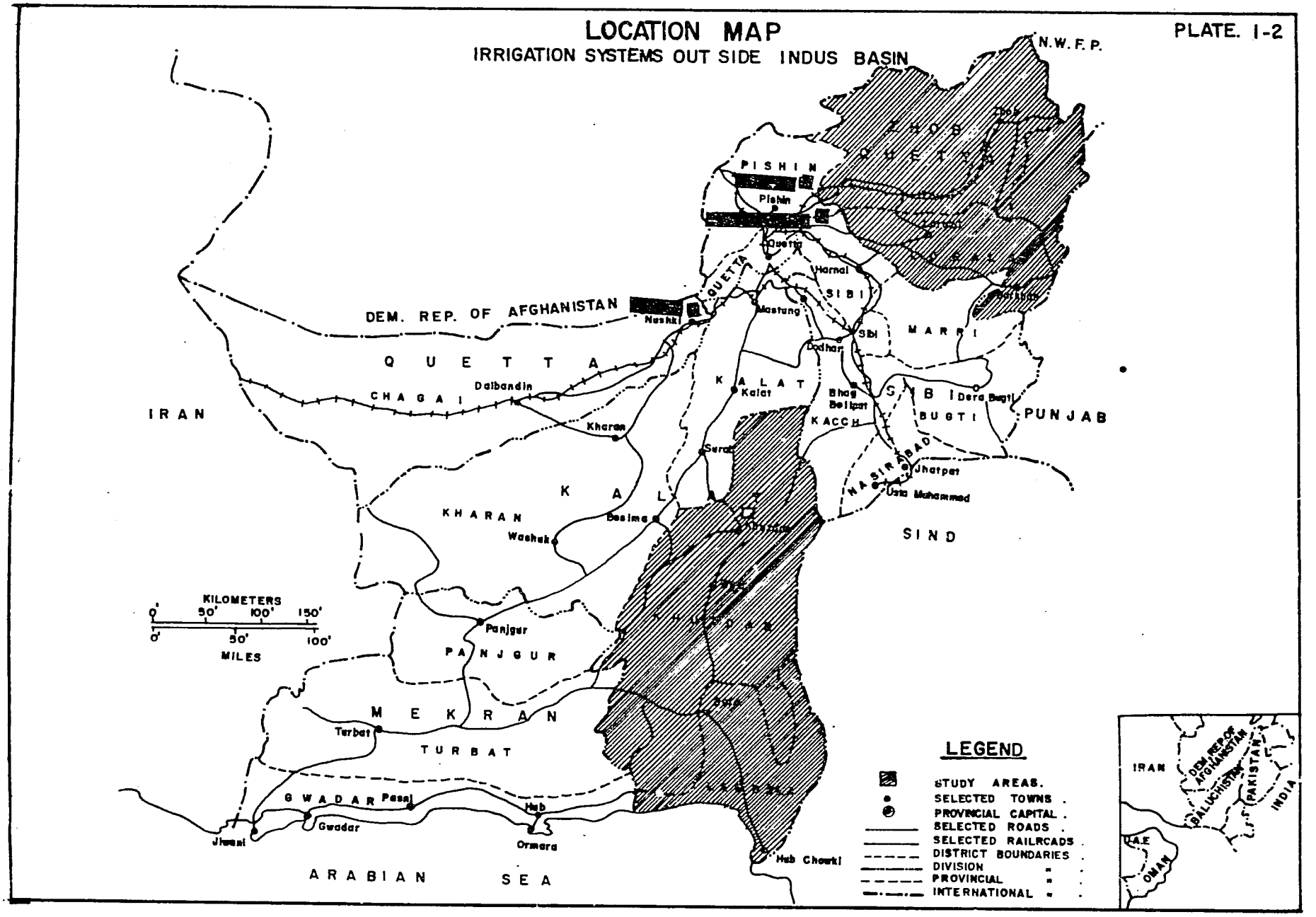

Shahbaz Saeed

CHAPTER-2

EXPERIMENTAL IMPROVEMENTS

2.1 IMPROVEMENT TECHNIQUES

Five types of experimental improvements have been undertaken to determine their effectiveness in minimizing the problems associated with karez irrigation. These improvements were finalized on the basis of data collected and research needs identified during the Bench Mark Survey of 12 karezes located in selected valleys of Baluchistan. These experimental improvements include the following:

1. Cleaning of karez tunnel to increase discharge.

2. Capping of karez wells to reduce maintenance costs.

3. Hand percussion boring in karez wells to tap the deeper aquifers thereby increasing karez flow.

4. Artificial recharge of water to increase karez discharge.

5. Command area improvement works.

2.2 DETAILS OF EXPERIMENTAL IMPROVEMENTS

The details of the experimental improvements and works involved in each is given below:

1. Cleaning of Karez Tunnel:

Abdul Hakim Karez was selected for studying the cleaning of the karez tunnel. In total 7800 ft. of karez tunnel was cleaned using the traditional cleaning method. This was required to be done in any case before placing the caps on karez wells which is an other intervention planned for study. A topographic survey of the karez tunnel was conducted before cleaning the karez tunnel. Profile survey of karez tunnel before cleaning is attached as Plate 2-1. Flow measurements were conducted before and after the cleaning. In total Rs. 156000 was spent on cleaning of 7800 feet long tunnel which works out to be Rs. 20 per foot of length. Forty percent increase in karez discharge was measured after the cleaning.

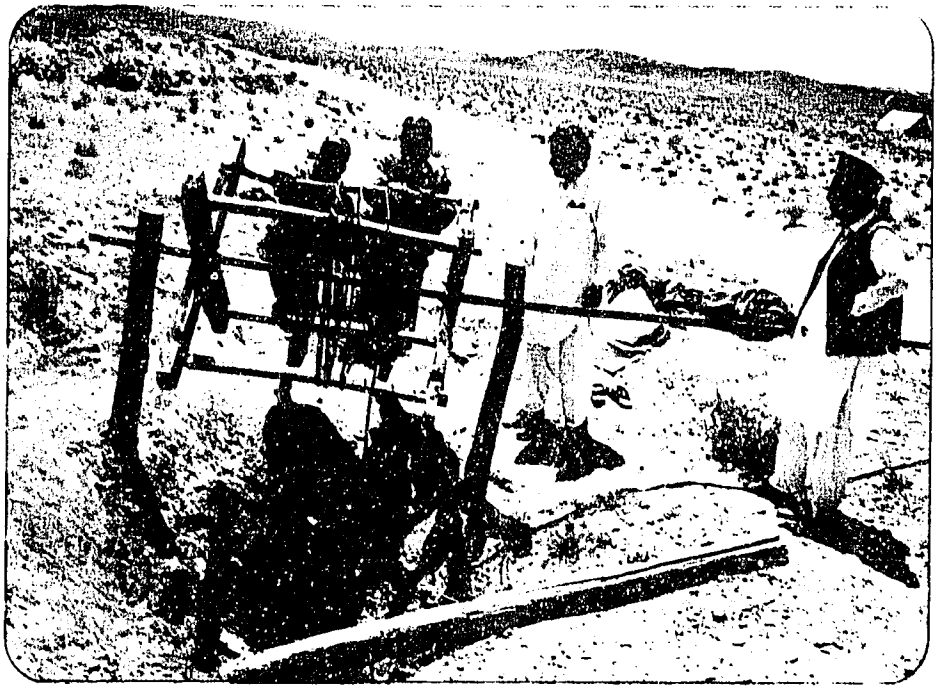

Cleaning of karez well and tunnel before improvment.

2. Capping of Karez Wells

The objective of this activity is to place covers on the karez wells. If left unprotected, these wells erode when it rains, causing material to fall into the tunnel and reduce the flow area, sometimes blocking the flow entirely. The farmers are fully aware of the usefulness of capping the wells. A few wells are seen capped with stones, bushes and earth on almost every karez. Present data on capping of wells are shown in Table 2-1. Most of the material used for capping falls into the tunnel while removing the caps for cleaning. Lids need to be designed with provision for opening and closing if required. The capping activity requires design of feasible, innovative and cheap lids with standard construction materials and methods.

Properly designed lids were installed on 78 wells of the Abdul Hakim Karez to determine the effect of capping on frequency of karez cleaning. These wells of Abdul Hakim Karez are shown on strip survey map, Plate 2-2. This intervention, which is expected to reduce the annual maintenance cost of a karez and hence prolong its life, received immediate and enthusiastic acceptance by the karez owners.

3. Hand percussion Boring in Karez Wells

Water from karezes is obtained by excavating yielding wells to a depth which intercepts the water table. Flow from this unconfined aquifer can usually be supplemented by drilling a much deeper, small diameter hole to intercept an artesian (confined) aquifer. The technical viability of this technique has been demonstrated at Khanozai where a farmer has undertaken hand boring in an open dug well and increased the discharge. This technology was also used by the Provincial Irrigation and Power Department when they drilled 30 wells in the Turbat area; and at 23 of these sites, a significant increase in flow was obtained. Generally, the artesian aquifers in Baluchistan are from 100 to 400 feet deep. The sedimentary rock over-laying these deeper aquifers is medium to moderately hard. In such rocks, drilling is normally done by using percussion or rotary drilling machines. However, the Provincial Irrigation and Power Department hired local contractors who successfully used

8

TABLE 2.1

DATA ON TRADITIONAL CAPPING OF WELLS

Sr. No.	Name of Karez	Total No. of Wells	No. of erroded	No. of capped
1.	Abdul Hakim	78	5	3
2.	Khanozai	138	4	88
3.	Balozai	40	2	27
4.	Sahib	45	1	33
5.	Sahibzada	116	2	79
6.	Tor Daman	50	-	42
7.	Jalogir	45	-	-
8.	Ishkara	74	7	16
9.	Kundki	86	65	2
10.	Kalan	78	42	2
11.	Jungle Bundat	15	2	-

PLATE 2-1

PROFILE SURVEY OF KAREZ TUNNEL

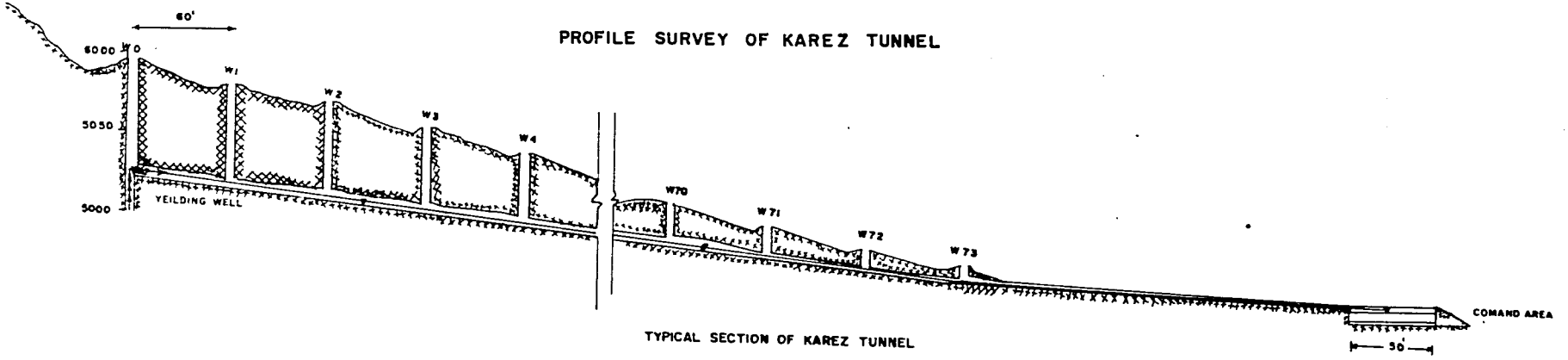

TYPICAL SECTION OF KAREZ TUNNEL

10

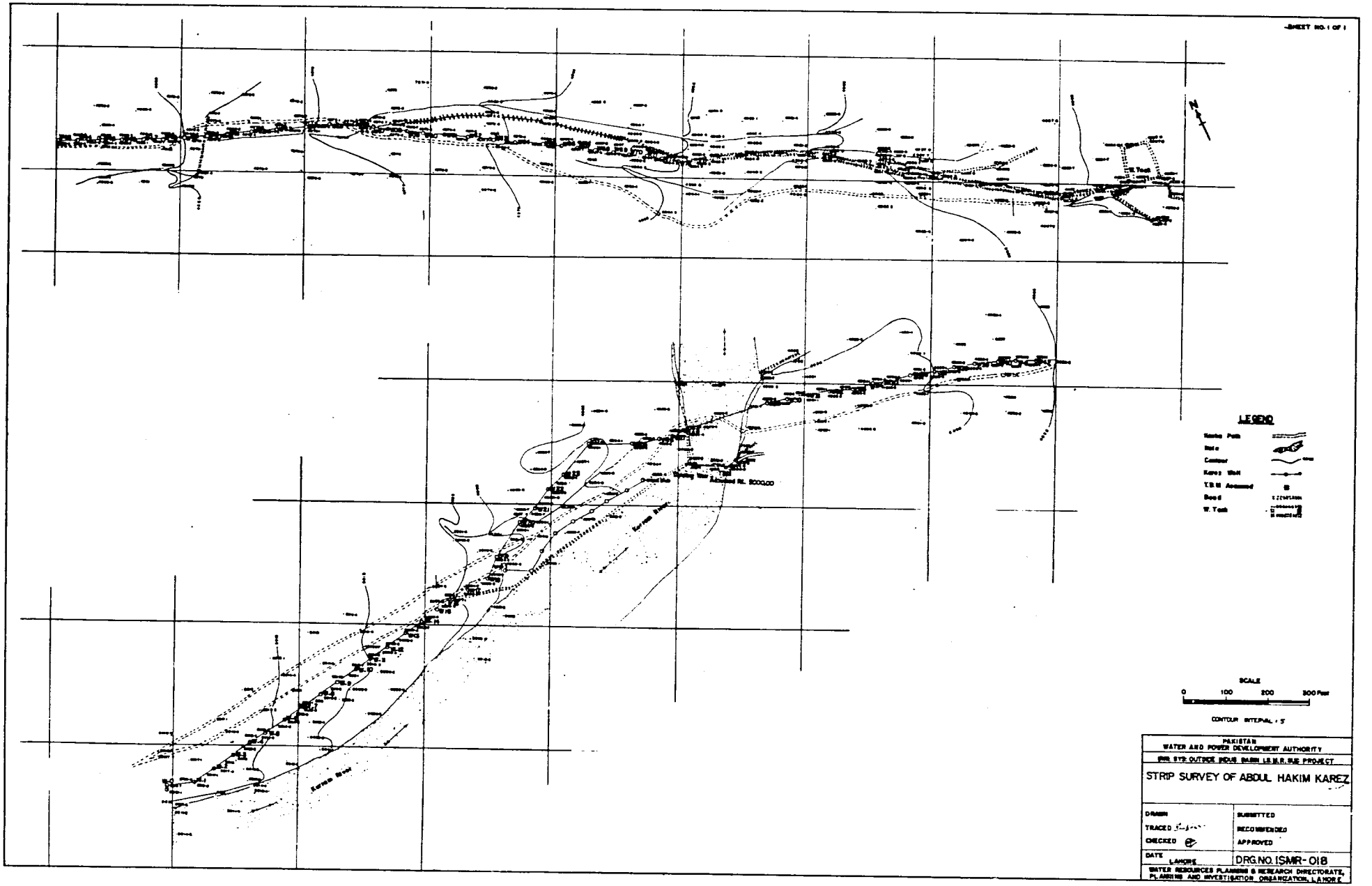
SHEET NO. 1 OF 1
LEGEND
Contour
W. Tank
SCALE
0 100 200 300 Feet
CONTOUR INTERVAL : 5'
PAKISTAN
WATER AND POWER DEVELOPMENT AUTHORITY
STRIP SURVEY OF ABDUL HAKIM KAREZ
DRAWN
TRACED
CHECKED
DATE
LAHORE
SUBMITTED
RECOMMENDED
APPROVED
DRG.NO. ISMR-018
WATER RESOURCES PLANNING & RESEARCH DIRECTORATE,
PLANNING AND INVESTIGATION ORGANIZATION, LAHORE

Installation of well lid under construction.

Well with lid after improvement.

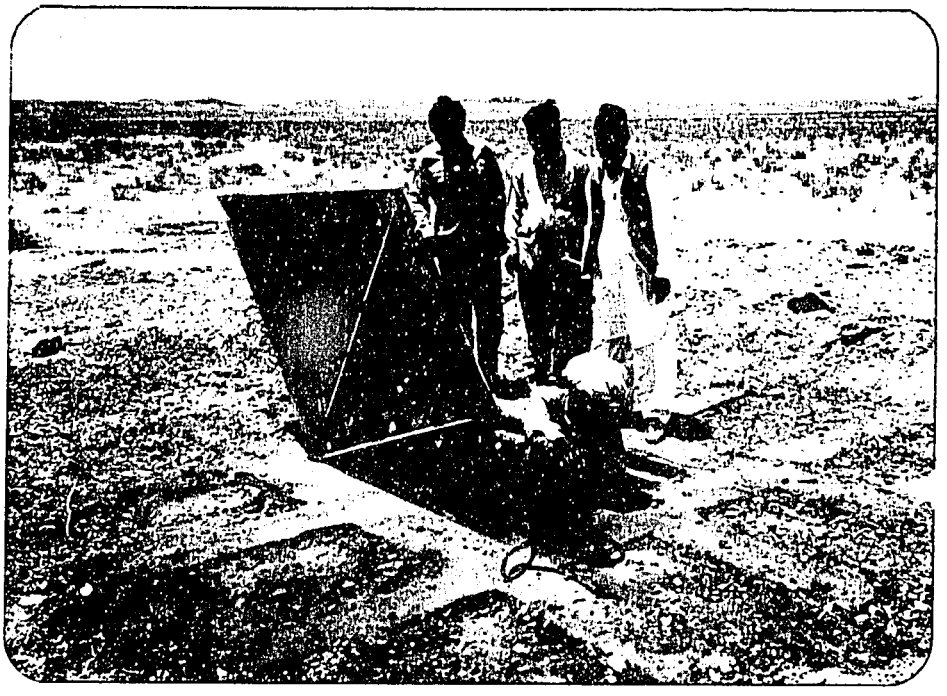

Well after improvement.

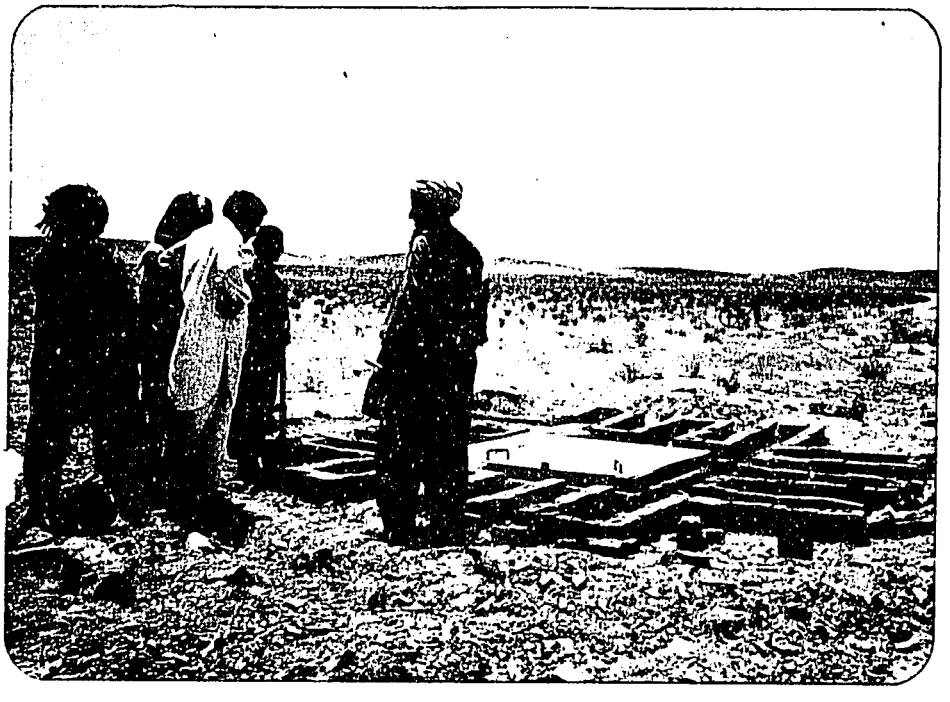

Installation of well lid.

manual rigs to drill the aforementioned 30 wells. Encouraged by this experience, the technique of hand percussion boring in use locally was adopted for drilling in karez wells.

Khanozai Karez was selected for undertaking the experimental hand percussion boring for possible increase in karez discharge. A total of 506 ft. of 4-inch diameter boring was done in six karez wells to turn them into yielding wells. The details are given in Table 2-2.

Different methods such as cut-throat flume, velocity meter and bucket and stop-watch for measuring the flow from these wells were considered as it is difficult to take flow measurements in small diameter wells that are about 80 ft. deep. Finally, the amount of water flowing from each bored well was measured by the bucket and stopwatch method. Discharge measured from these wells ranged from 13 to 30 gpm. A total of 0.20 cfs. (100 gpm) of water was added to the existing karez flow. These data are also summarized in Table 2-2. Over the period of time from September, 1987 to September 1988 well discharges declined in similar pattern of karez discharge.

4. Artificial Recharge Trials

Generally, karezes in Baluchistan receive their water from the aquifers which are fed directly from the beds of adjoining nallahs and streams whose catchments are in the mountains. These nallahs are mostly non-perennial, and water passes through them in the form of flash floods after rainfall. The duration of such floods varies from a few hours to a few days.

Because of the topography of Baluchistan, its arid nature and the limited vegetation, most of the flood water is wasted as run-off. In order to increase the recharge into the aquifers which feed the karezes, it was planned to construct small structures to delay the surface run-off in the nallahs, thereby allowing more water to infiltrate into the ground. The technical feasibility of this intervention has already been demonstrated at the Abdul Hakim Karez. The karez, after supplying water for about 25 years, had gone dry and remained so about 5 years until the Provincial Irrigation & Power Department constructed a flood diversion weir across

TABLE 2.2

DISCHARGE MEASUREMENT DATA FROM KHANOZAI KAREZ

Well No.	Depth of Boring (ft.)	Discharge (gpm) from the Bore.			
		Date 22.9.87	Date 10.12.87	Date 19.1.88	Date 28.4.88
5	73	11.33	10.53	9.54	10.90
6	71	10.18	9.85	8.89	10.53
7	52	14.57	13.28	12.22	13.88
63	122	18.02	16.07	13.88	16.97
67	140	16.09	15.27	12.73	15.27
72	48	30.00	23.49	20.36	27.76
Total Well Flow		100.19	88.49	77.71	70.31

15

Kurram Manda close to it. As a consequence, flash floods of the stream were delayed causing water to infiltrate into the ground, and the karez again started flowing. However, this activity does involve uncertainty with regard to both quantity of water recharged and reliability of structures required. It is experimental and its scope will depend entirely on the success of initial trials. Jungle Bundat Karez and Abdul Hakim Karez have been selected to study the effect of an earthen reservoir and a gabion bund, respectively, on groundwater recharge.

5. Command Area Improvement Works

Experimental improvement of the like channel conveying water from karez daylight point to command area, a water storage tank and earthen improvement of command area watercourses were undertaken to improve the irrigation effeciency at Abdul Hakim Karez. Conveyance losses were measured in all of these watercourses before the installation of improvements (Table 2.3). A modified drip irrigation system was installed on 5 acres of newly established orchards to improve the application efficiency. The layout and associated details of this system are shown on Plate 2-3. The cross-sections of the improved watercourses are shown on plate 2-4.

2.3. DESIGN OF CAPS

Different designs and materials were considered for the construction of caps/lids for the karez wells. The designs of caps for non eroded wells and moderatley eroded wells developed by AID experts while preparing the Project Paper for Baluchistan Area Development Project (BALAD) July, 1984 were also considered. However, these caps are heavy and do not have provisions for the labourers to go down into the access wells for cleaning of the karez tunnel and removal of excavated material. These designs are shown in Plate 2-7. To overcome these problems, a steel lid was designed as shown on Plate 2-8. This lid is light, and has the provision for opening and closing. The lid is placed on a brick masonry platform provided on the well mouth to maintain the cross section. The steel lid is hinged to the angle iron frame buried in P.C.C. concrete. These lids were installed on 78 wells of the Abdul Hakim Karez to determine the effect of capping the wells on frequency of karez cleaning and cost.

Table 2.3

CONVEYANCE LOSS MEASUREMENTS IN WATERCOURSES OF ABDUL HAKIM KAREZ

Sr. No.	Name of watercourse	Q_1 Cfs	Q_2 Cfs	Distance between Q_1 & Q_2 Ft.	Loss Cfs 1000/ft
1.	Link Water Course Mainwater	0.20	0.12	1660	0.05
2.	Command Area Water-course	0.30	0.18	1800	0.07
3.	Command Area W/C B	0.35	0.13	1540	0.14
4.	Command Area W/C C	0.30	0.20	1780	0.06
5.	Command Area W/C D	0.25	0.11	1600	0.09
6.	Command Area W/ C E	0.20	0.10	1620	0.06

11

2.4 DESIGN OF ARTIFICIAL RECHARGE TRIALS

Two karezes namely, the Abdul Hakim Karez in Panjpai and the Jungle Bundat Karez in Ziarat have been selected for studies planned for artificial recharge of the aquifer feeding the karez. The Abdul Hakim Karez runs adjacent to Kurram Manda, an ephemeral stream. The watershed of the Kurram Manda starts above the karez and is about 42,000 acres. It is proposed to install a low cost, wire-crated, gabion bund across this nallah just above the karez to delay the run-off so as to increase the recharge into the aquifer that feeds the karez. The study layout and design of the bund is shown on Plates 2-9 and 2-10. Design calculations of gabion bund are given as Annexure 2-3 the study also includes installation of 2" diameter P.V.C. piezometers for monitoring the effect of recharge trials at this karez. The construction of the gabion bund has been completed and monitoring of water levels with the piezometers is in progress.

At the Jungle Bundat Karez, an earthen storage reservoir 200 x 193 x 10 ft. has been constructed at the top of the karez. It is planned to divert the flow of a karez located above the Jungle Bundat Karez into this earthen reservoir during four months of winter when its water is not used for irrigation. Evaporation from the earthen reservoir will be less during this period. As the karez water is clean and free of sediment, comparatively more water will infiltrate into the ground and will increase recharge into the aquifer.

Two-inch diameter P.V.C. Piezometers have been installed to monitor the groundwater fluctuations. The details of artificial recharge study at Jungle Bundat Karez is shown on Plate 2-9, the design of earthen reservoir is shown on Plate 2-10.

2.5. COST ESTIMATE

Cost estimate for works invloved for undertaking experimental techniques has been prepared using the WAPDA Composite Schedule of Rates, 1979. Twenty-five precent premium has been added on WAPDA Schedule of Rates as allowed by the authority. For non-schedule items, the rate analysis using market rates has been carried out for the purpose of cost estimation. The cost estimate for various items of work is given below.

1. Cost Estimate for Lids

i) Concrete Area:

(6.5 x 6.5-4.5 x 4.5) + 3 x 1 x 12
= (42.25 - 20.25) + 36
= 22 + 36 = 58

PLATE 2-3

LAYOUT OF PIPE IRRIGATION SYSTEM AT
ABDUL HAKIM KAREZ

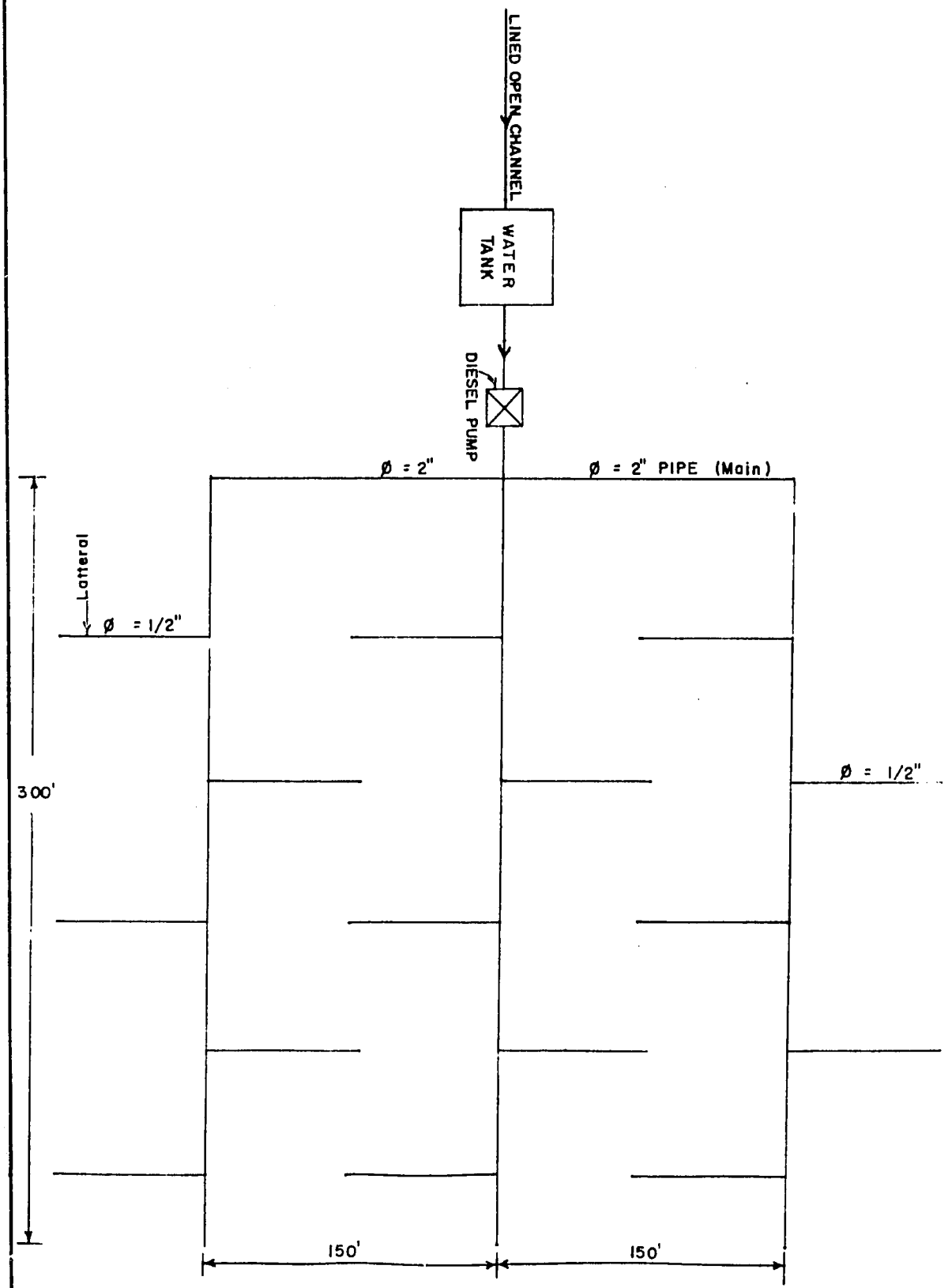

19

PLATE NO. 2-4

CROSS SECTIONS OF IMPROVED WATERCOURSES

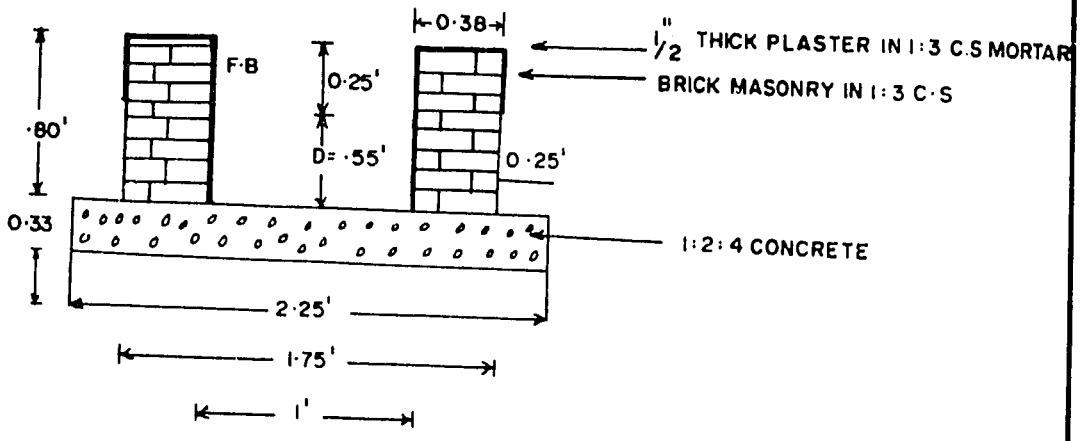

CROSS-SECTION OF LINED WATERCOURSE
(Link watercourse at Abdu Hakim Karez)

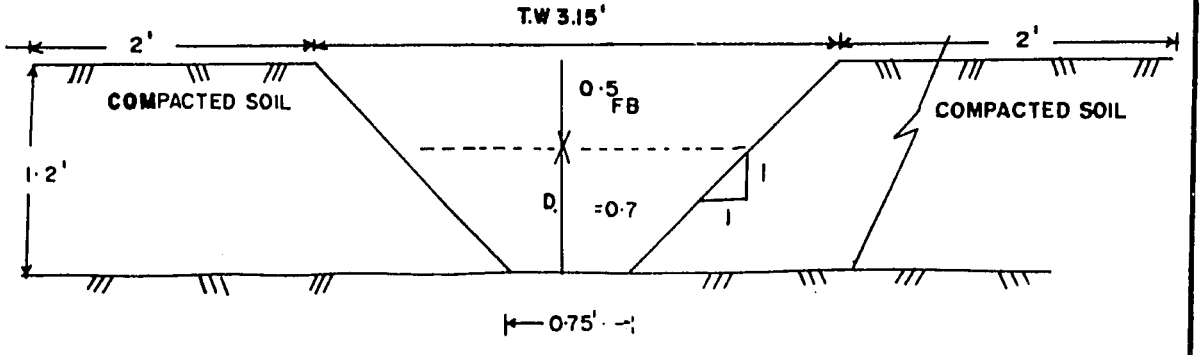

CROSS SECTION OF EARTHEN IMPROVED WATERCOURSE

20

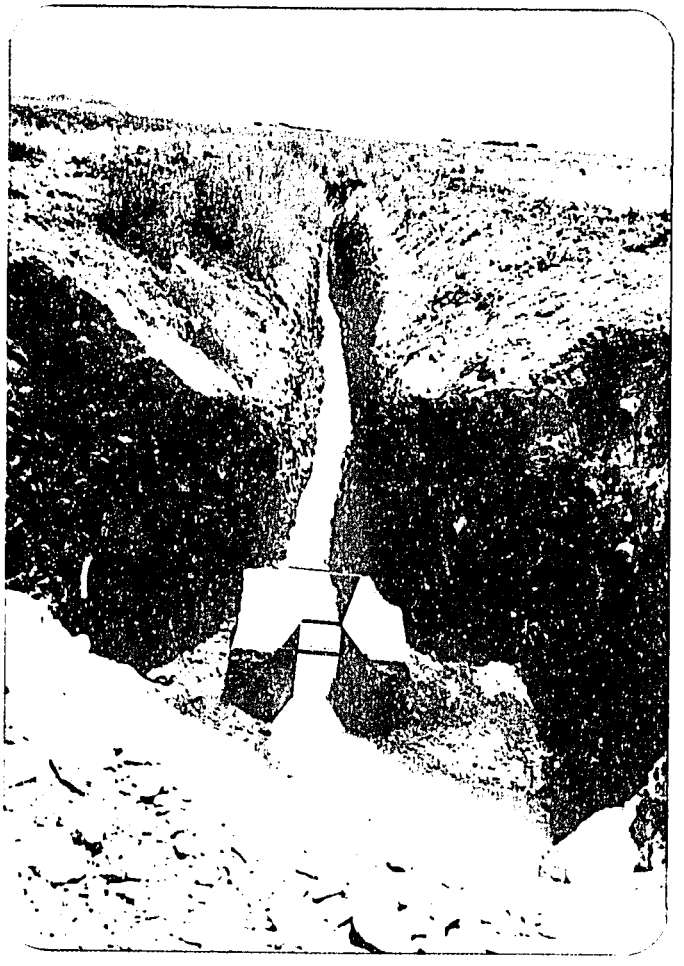

Discharge measurement at the mouth of karez by cut throat flume.

A view of channel before and after improvement.

Concrete Volume:

58 x 0.5 = 29 Cft. (RCC) = 30 Cft.
@ Rs. 20.60/Cft. = 618
Add 25% = Rs. 772.50

ii) Angle Iron including cutting, welding etc. complete in all respects - 2" x2" x1/4" 30 Kg @ Rs. 10/Kg = 300.00

iii) M/S cover including fixtures, cutting, welding, drilling holes complete in all respects. 24 Sft. = 950.00

iv) 1/2" iron bar mesh including cutting & welding of bars as per drawings and also welding with M/S. Cover complete in all respects. 32 Sft. = 900.00

v) 9" thick brick masonary on sides of well below the lid. (6'x 0.75' x 1') x4 = 18 Cft. @ 550.50/ 100 Cft. = Rs.99/-
Add 25% 124.00

vi) Earthwork excavation:

a) 12.5' x 12.5' x 2.5' x 4 = 390.60
b) 1' x 6.5' x 2.5' x 4 = 16.25
Total: 406.87 Cft.
@ 126.4/ 100 Cft. 514.28
Total Cost: 3097.92
Say Rs.3098.00
Total Cost for 78 Lids = 2,41,644.00

2. Cost Estimate for Hand Percussion Boring

A. General

i) Hand boring depth 60 to 80' /bore. Taking 80 ft. depth

ii) Dia of hole/bore 4" dia

iii) No. of holes/bores to be bored 12 Nos.

iv) Mobilization/demobilization One Job

27

PLATE 2-5

KAREZ CAP TYPE C (BADLY ERODED)

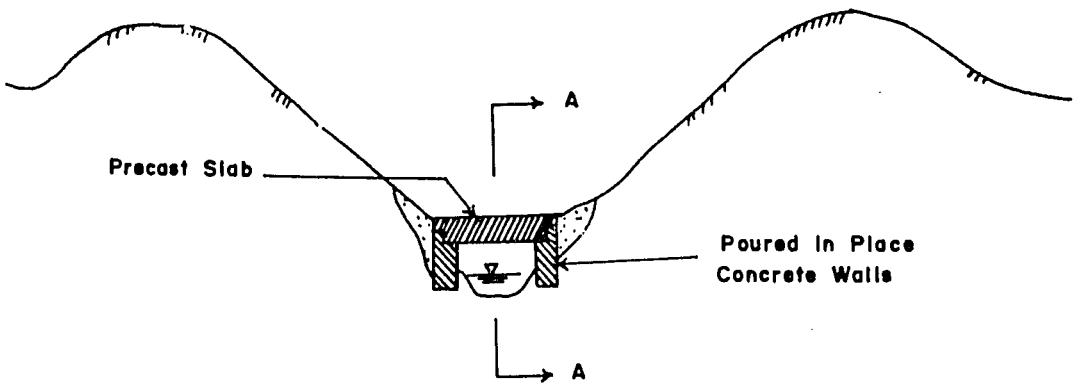

SECTION
(ACROSS KAREZ)

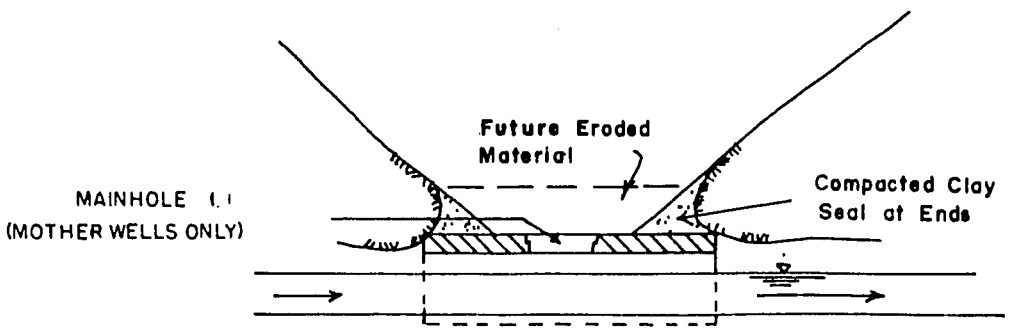

SECTION AA
ALONG KAREZ

23

DESIGN OF KAREZ LID

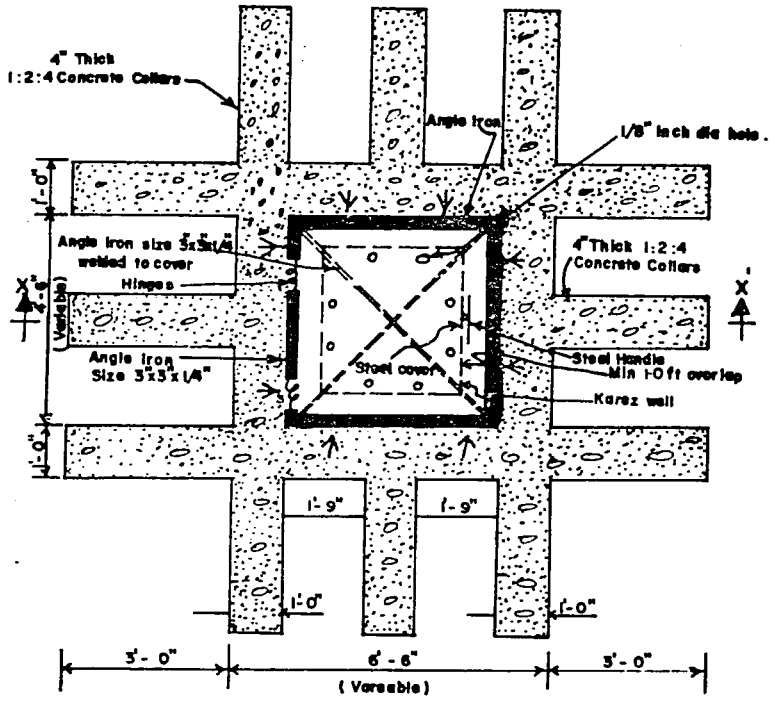

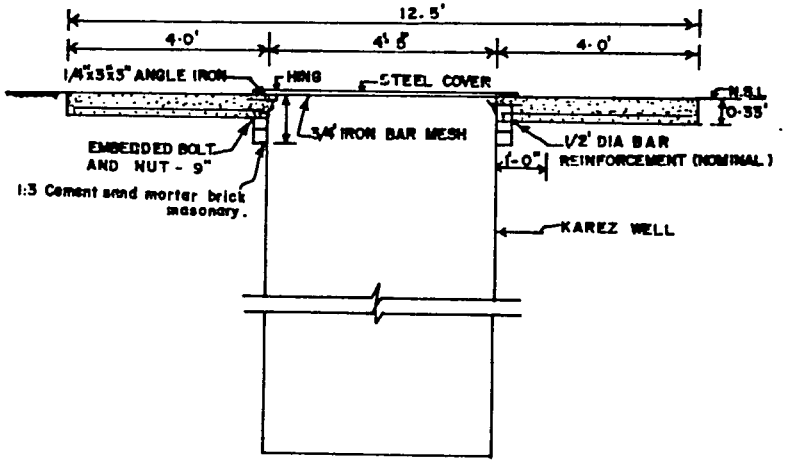

X-SECTION AT X-X'
(DETAIL OF KAREZ LID)
SCALE : 1/2" = 1' 0"

PAKISTAN WATER AND POWER DEVELOPMENT	
ISMR PROJECT	
DESIGN OF KAREZ LID	
DRAWN TRACED CHECKED	SUBMITTED RECOMENDED APPROVED
DATE LAHORE	DRG.NO.ISMR/1
PLANNING SOUTH DIRECTORATE LAHORE	

24

PLATE 2 - 7

STUDY LAYOUT FOR RECHARGE WORKS AT KHURRAM MANDA

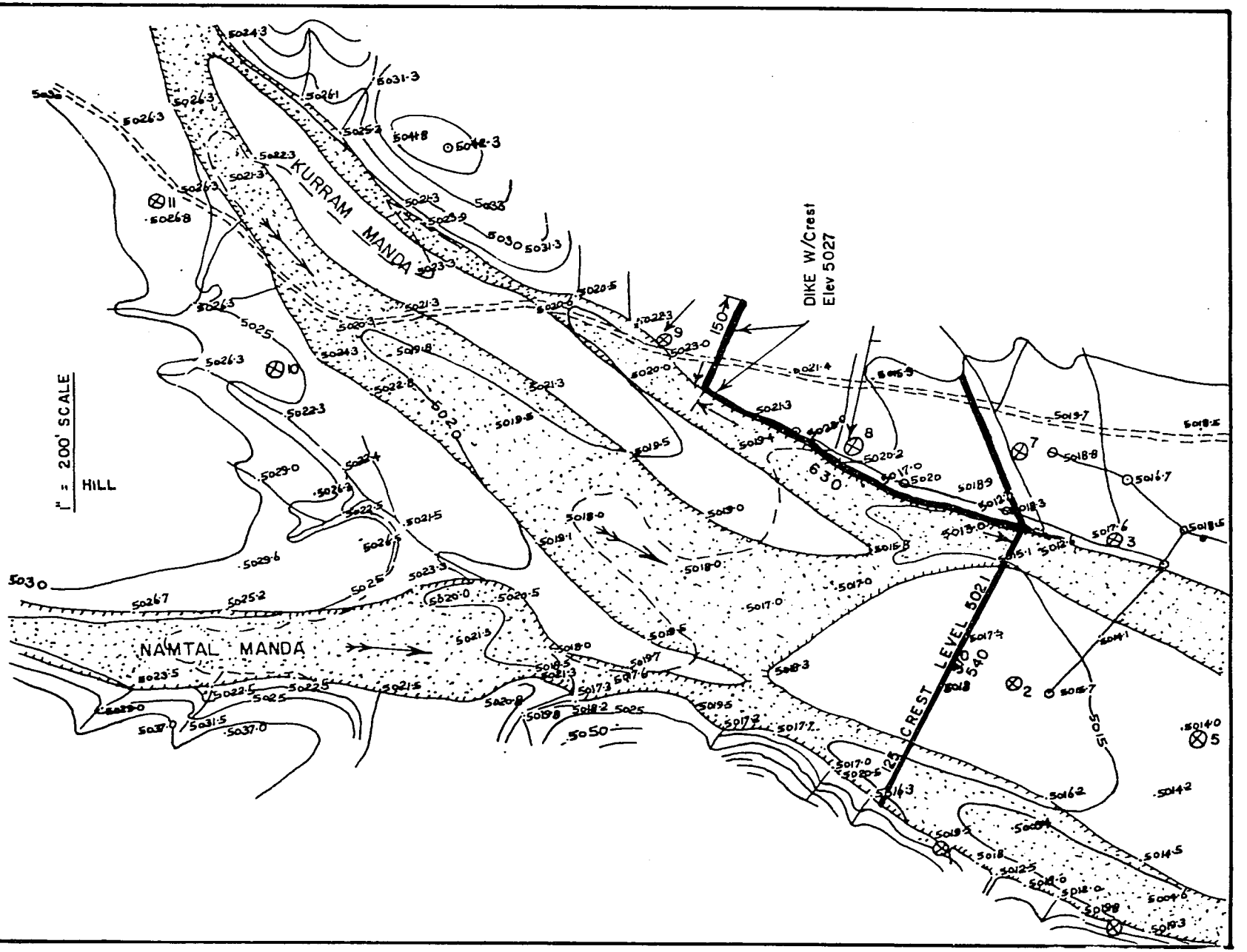

Shahbaz Saeed

PLATE 2 - 8

DESIGN OF GABION BUND

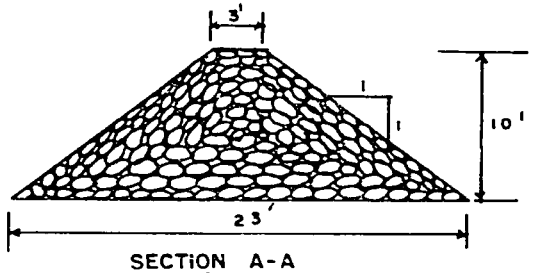

SECTION A-A

SECTION OF WIRE-CRATED GABION BUND

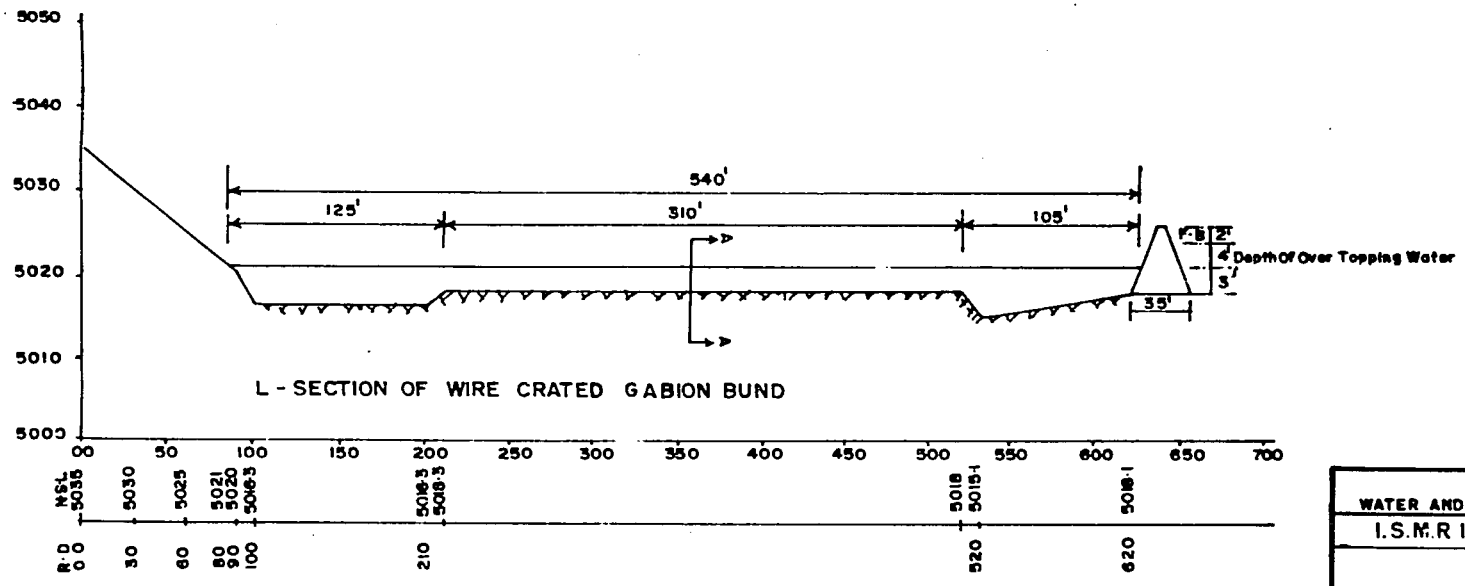

L - SECTION OF WIRE CRATED GABION BUND

PAKISTAN WATER AND POWER DEVELOPMENT AUTHORITY	
I.S.M.R IRRIGATION SCHEME	
DRAWN TRACED N. Farhad CHECKED	SUBMITTED RECOMMENDED APPROVED
DATE LAHORE	DRG. NO.
WATER RESOURSES PLANNING & RESEARCH Dte PLANNING AND INVESTIGATION ORGANIZATION LHR	

A view of installed lids on karez wells.

A view of the mouth of karez at ground surface.

B. Detail of Works and Rates

i) Hiring of boring equipment including tripod, sludger, pully, wooden planks, sand bags, hammer, chisels etc. (L.S.) 500/- per day

ii) Hiring of 80 ft. casing pipe 4" dia @ Rs. 10/- p/rft./day = 800/- per day

iii) Labour/wages of 4 No. unskilled @ Rs. 35/- per No. per day = 140/-

iv) Wages of skilled labour (bore master) one No. @ Rs. 125/- per day 125/- per day

Total for (i),(ii),(iii) & (iv) Rs.1565/- per day

v) Mobilization and demobilization of equipment from Quetta to Panjpai (Abdul Hakim Karez) and Panjpai to Quetta (L.S.) 10,000.00

vi) Consumable material like rope etc. 8,000.00

vii) Miscellaneous/unforeseen expenses 5.000.00

Total Rs. 23.000.00

Total Expenditure = 1565x96 = 150,240.00

Grand Total: (Rs. 150,240 + 23,000) = 173,240.00

C. Progress of Works

Boring by hand in shingle and gravel formation 10 ft./day

D. Total length/depth of 12 Nos. bore holes 80 x 12 = 960 Rft.

Total number of days required for 960 Rft. depth boring 960/10 96 days

Cost per ft. depth of boring 173,240/960 180.46

Say Rs. 180.00 per Rft.

Total cost for 500 ft. boring 90,000.00

28

PLATE 2-9

STUDY LAYOUT FOR RECHARGE TRIALS AT JUNGLE BUNDAT KAREZ

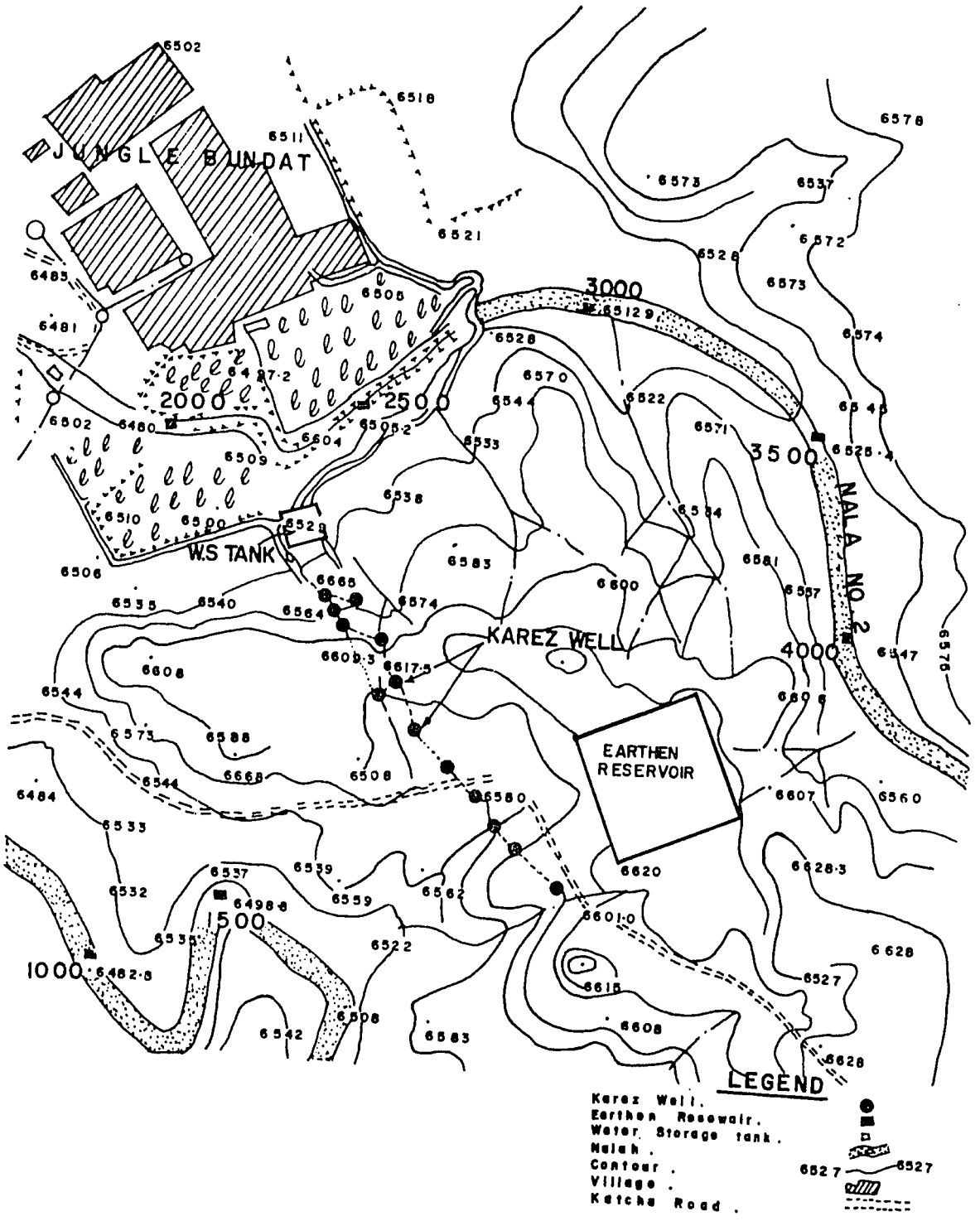

29

PLATE 2-10

DESIGN OF EARTHEN RESERVIOR
JUNGLE BUNDAT KAREZ

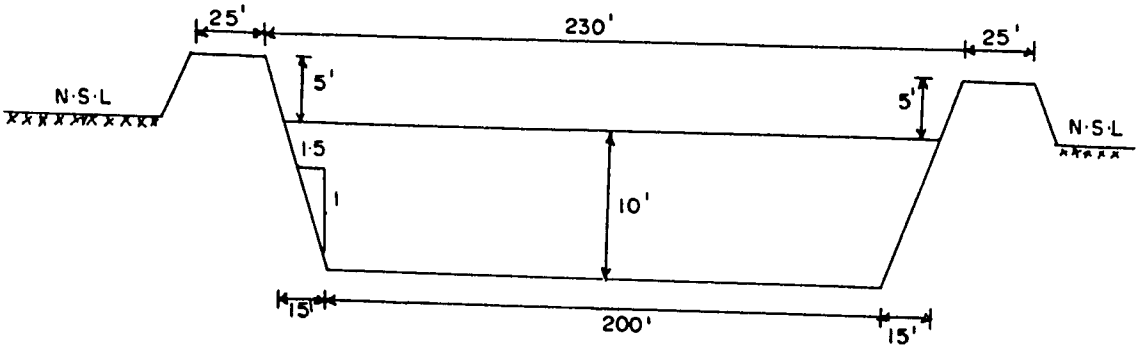

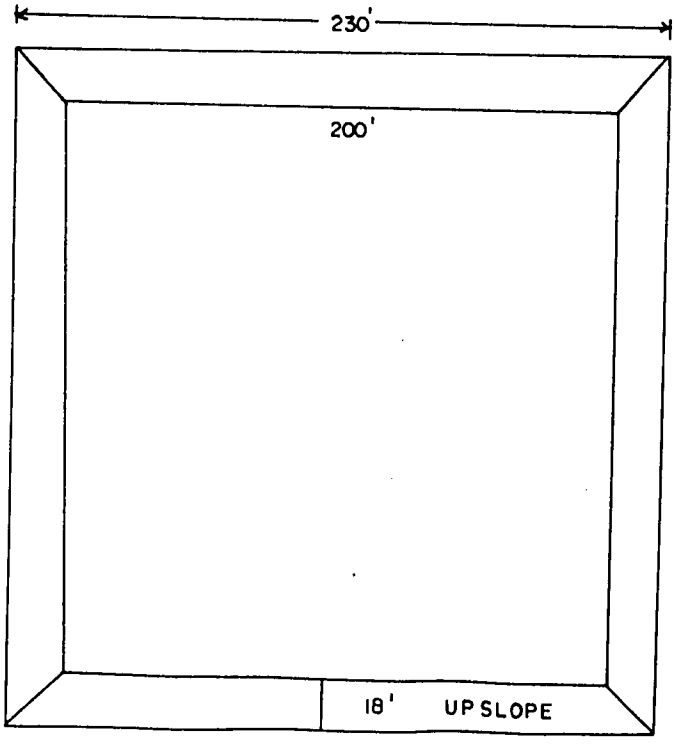

30

3. Cost Estimate for Recharge Works

A. Cost Estimate for Construction of Wire-Crated Bund at Kurram Manda

Summary of Cost

sr.	Description	Qty.	Unit	Rate Rs.	Amount
1.	Earthwork excava-tion in medium soil as per design WAPDA schedule rate 9/5 (a)	93510	%0Cft.	140.40	13,128.80
2.	Wire-crated gabions	71630	%0Cft.	523.64	375,083.33
	Protection Earthen Bund				
3.	Excavation in Shingle or gravel formation and rock undressed lead up to 100 ft. (dry) 9/4 (9)	36720	% 0Cft.	279.30	10,253.89
4.	Ramming earth work (all types of soil) 11/13 (a)	36720	%0Cft.	22.10	811.51
5.	Stone filling 1 ft. hin (dry hand packed) 31 /16	15033	%0Cft.	345.20	51,894.95
				Total:	451,174.48
	Add 25% premium on WAPDA Schedule Rate Item i.e. 1, 3, 4, & 5				19,022.78
			Grand Total:		470,197.26
		Say	Rs.		470,197.00

31

COST ESTIMATE FOR EARTHEN CHANNEL AND STORAGE RESERVOIR AT JUNGLE BUNDAT

sr.	Description	Qty.	Unit	Rate Rs.	Amount
1.	Earthwork excavation for irrigation channel as in shingle and gravel formation as per design	15375 Cft.	%0Cft	312.00	4797.00
2.	Filling, watering and ramming earth, new earth excavated from outside borrow pits, lead upto 100 ft. and lift upto 5 ft.	8500 Cft.	%0Cft	178.90	1520.65
3.	Earthwork excavation for earthen reservoir dry as in shingle or gravel formation and rock, undressed lead up to 100 ft.	200000 Cft.	%0Cft	279.30	78204.00
4.	Extra for bank dressing and leveling of earthwork to designed section, complete gravel work or soft rock (not requiring blasting) including ramming earth work (all types of soil) etc.	240000 Cft.	%0Cft	45.80	10992.00
			Total:		95513.65
	Add 25% premium as allowed on WAPDA Schedule of Rates, 1979.				119392.00

32

CHAPTER-3

MONITORING AND EVALUATION

Detailed monitoring of the experimental improvements installed at various Karezes, has been planned. The monitoring plan for each experimental improvement is discussed below.

3.1 MONITORING OF INSTALLED LIDS

In order to assess the durability of lids, their usefulness and effectiveness, it is proposed to monitor the performance of lids installed at the Abdul Hakim Karez. For evaluating the effectiveness of capping, cleaning frequency data of several years are required. For this purpose data will be collected on number of cleanings, cost of each cleaning, etc., whenever the cleaning will be done.

The main parameter which indicates the need for karez cleaning is the reduction in discharge. The reduction in discharge is also attributed to rains and the physical condition of the karez tunnel. Reduction in flow during the normal weather cycle indicates the requirement for cleaning. After installing the caps on the wells, it is assumed that no dirt from outside will fall in the well and also the wells will not erode during the rains causing the material to fall into the karez tunnel. However, cleaning of the tunnel between the wells may have to be undertaken. Because partial sloughing of the tunnel may take place as the sides of the tunnel are moist. The monitoring of the karez tunnel with installed caps on the wells should quantify the magnitude of this requirement. To determine the variation in karez discharge, a cut throat flume has been permanently installed in the lined, open channel below the karez daylight point. Monthly discharge measurements are being recorded for this flume. One flume has also been installed at the tail of lined channel to measure the conveyance losses in the channel.

The steel lids are also placed under close monitoring to gauge their performance in terms of their working and durability when exposed to field conditions. These observations should help to modify the lid design if necessary. It is also planned to collect rainfall data to correlate with the erosion around the lids and discharge of karez. The following data will be collected for the evaluation of capping and lids.

- Frequency of karez cleaning (Nos/year)
- Total cost of each cleaning.
- Monthly karez discharge measurement.

- Conveyance loss measurements in channel carrying karez water.

- Rainfall data (Rainfall data of the nearest met. Station namely Samungli for the last-years is attached as table 3-1. Subsequent data collection is in progress)

- Data regrarding the performance of steel lids.

3.2 MONITORING OF HAND BORED WELLS

Six hand-bored wells of the Khanozai Karez are under monitoring since september 1987. Discharge of all six wells was measured immediately after the completion of boring. As the diameter of a bored well is small, the volumetric method of measuring the flow is being used. Quarterly discharge measurements are being recorded from these wells to determine the behaviour of flow with time. These measurements will continue at least for two years to establish the pattern of fluctuation. Monthly discharge measurements for Khanozai Karez is also in progress to note the similarity in flow variation of hand bored wells and Khanozai Karez discharge. The discharge measurement data of Khanozai Karez in given in Table 3-2.

3.3 MONITORING OF RECHARGE TRIALS

For measuring the effect of recharge works following two methods are proposed :

1. Discharge Measurements of Yielding Wells

   Discharge measurements of karez yielding wells located below the recharge works will be measured periodically. This is not a direct measurement of recharged water, but will yield some good information, in this respect particularly when measurements are recorded before and after the rainfall, and some water has been retained by the recharge structure in the nallah bed. Flow of yielding wells will be measured by current meter in the Karez tunnel.

2. Monitoring of Groundwater Behaviour

   In order to study the effect of recharge trials on karez discharge, groundwater fluctuations around the yielding wells of the karez will be monitored with the help of piezometers at both sites where recharge trials have been set up. For this purpose, 12 2-inch diameter piezometers have been installed

TABLE 3.1

MONTHLY PRECIPITATION AT SAMUNGLI

Years	Jan.	Feb.	Mar.	Apr.	May	Jun.	Jul.	Aug.	Sep.	Oct.	Nov.	Dec.	Total
1978	2.63	2.29	0.72	0.62	0.00	0.00	4.80	0.04	0.00	0.00	0.91	0.30	12.36
1979	2.79	3.55	4.37	0.30	0.00	0.00	0.00	0.00	0.00	0.00	0.00	2.72	13.73
1980	2.75	2.55	2.16	0.11	0.00	0.20	0.00	0.00	0.00	0.00	0.00	0.14	7.91
1981	4.40	3.47	2.50	0.21	0.46	0.00	0.08	0.00	0.00	0.00	0.00	1.38	12.50
1983	2.40	2.40	2.68	5.83	1.14	0.00	0.87	0.00	0.00	0.00	0.00	0.00	15.32
AVG.	3.00	2.85	2.49	1.41	0.32	0.04	1.15	0.01	0.00	0.00	0.18	0.91	12.36

DISCHARGE MEASUREMENT DATA
KHANOZAI KAREZ

Table 3.2

Sr. No.	Date	Discharge Cfs	Remarks
1.	June, 1987	1.41	After Rains
2.	July, 1987	1.30	
3.	August, 1987	0.99	
4.	September, 1987	0.93	
5.	October, 1987	0.93	
7.	December, 1987	0.87	
8.	January, 1988	0.88	
9.	February, 1988	1.05	Light-Rain
10.	March, 1988	1.05	After Rain
11.	April, 1988	1.10	Light-Rain
12.	May, 1988	1.10	
13.	June, 1988	1.25	

above and below the gabion bund in Khurram Manda. The layout plan showing the location of these piezometers is shown on Plate 3-1. Similarly, 20 Piezometers have been installed around the earthen reservoir at the Jungle Bundat Karez as shown on Plate 3-2. Typical design of the piezometer is shown on Plate 3-3.

PLATE 3-1

PIEZOMETER LOCATIONS FOR RECHARGE SITE AT ABDUL HAKIM KAREZ PANJPAI

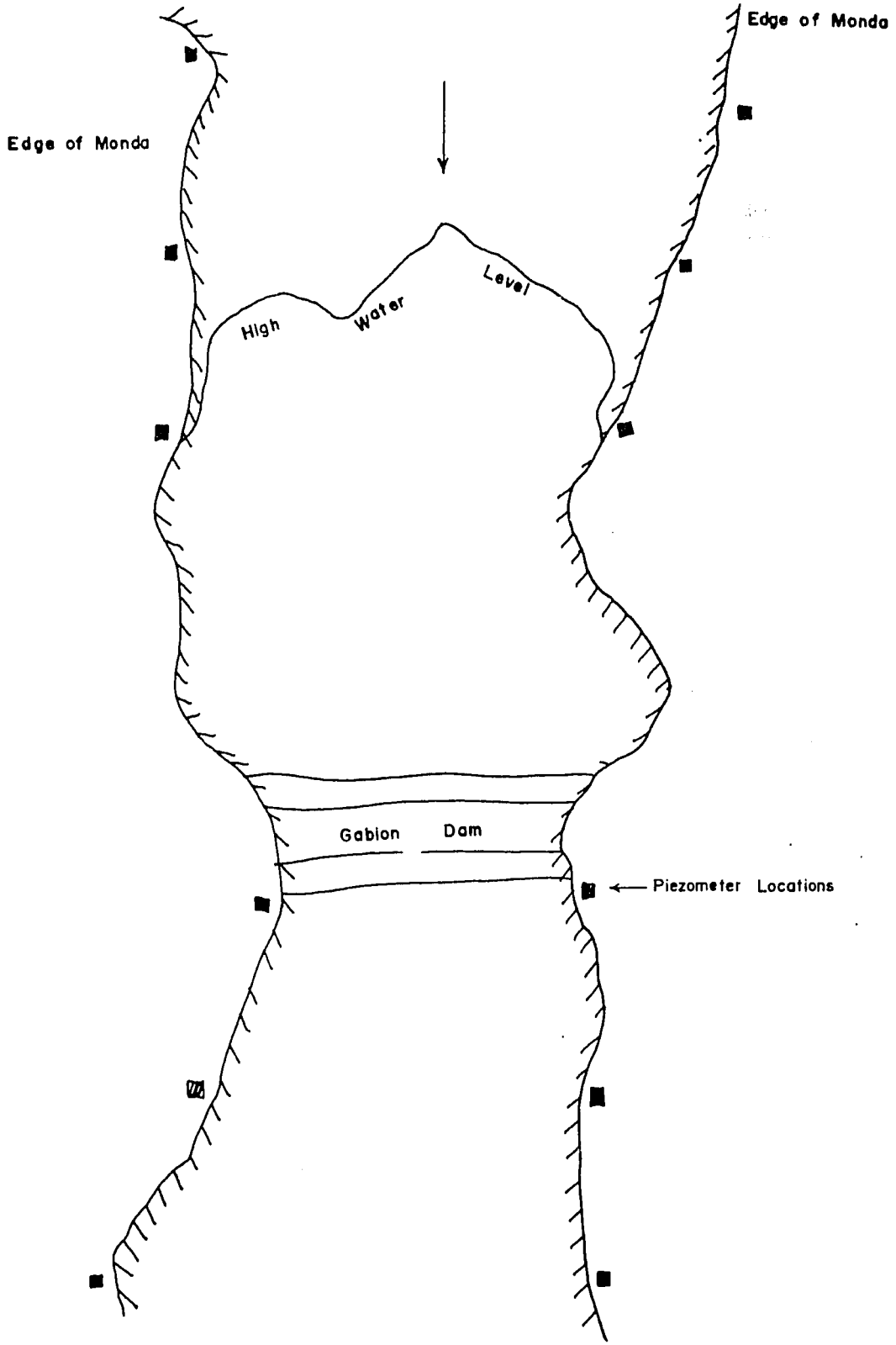

38

LOCATION OF PIEZOMETERS AT JUNGLE BUNDAT KAREZ

PLATE. 3-2

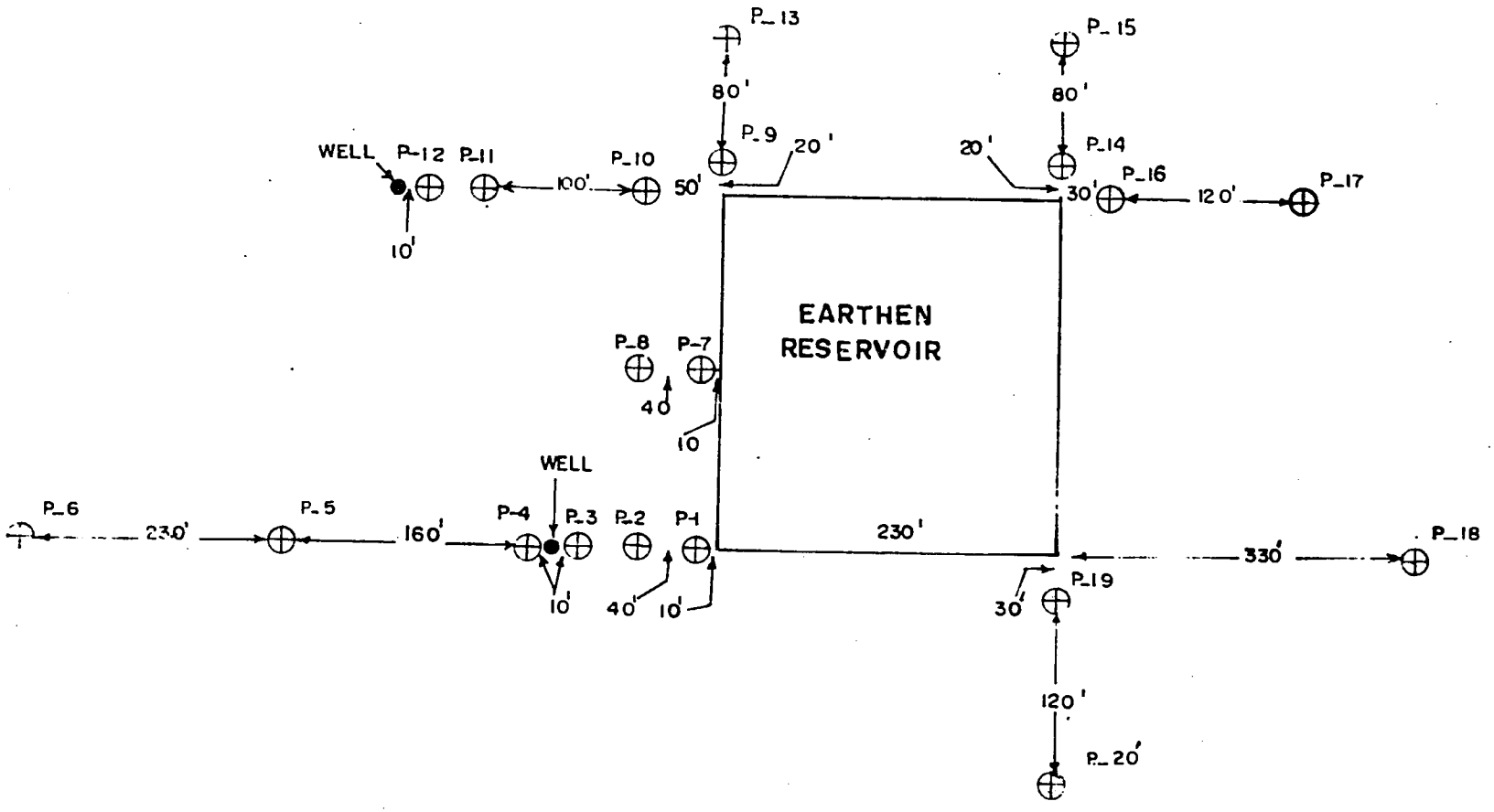

PLATE 3-3

TYPICAL PIEZOMETER

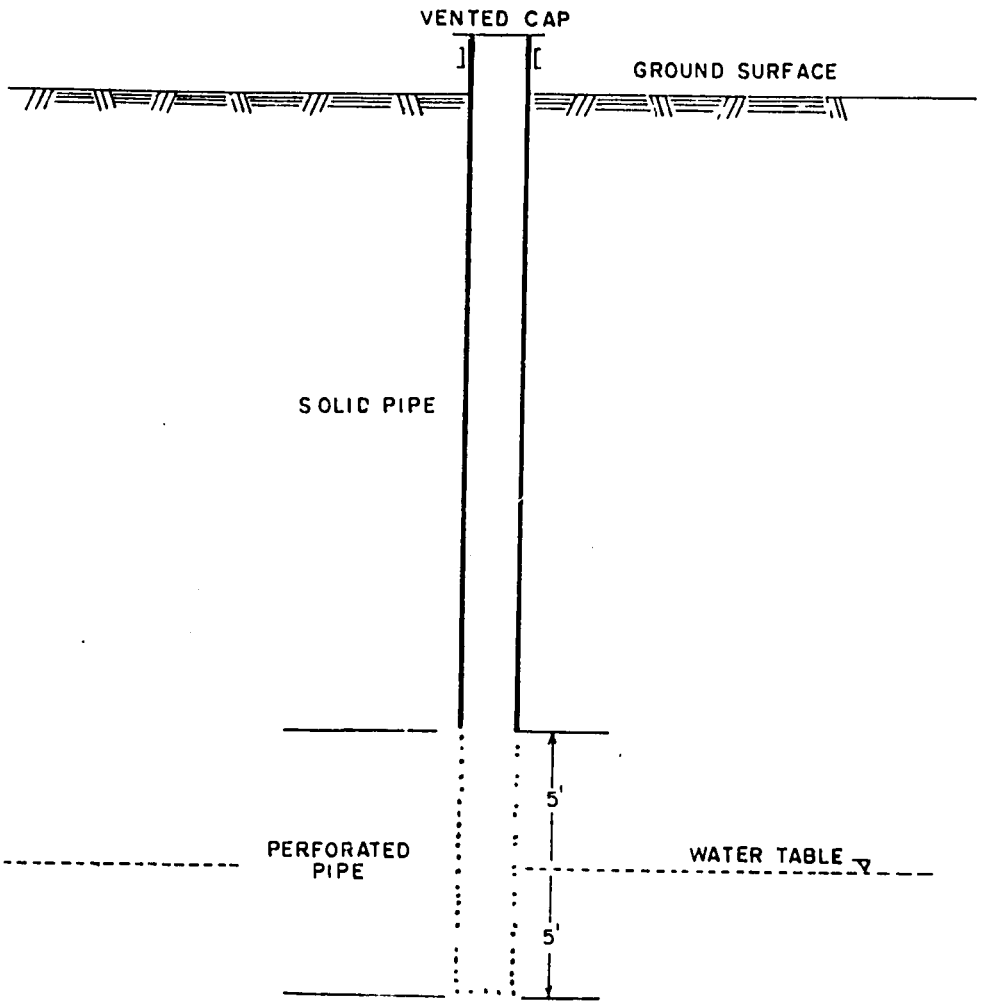

40

CHAPTER - 4

ECONOMIC EVALUATION

4.1 INTRODUCTION

Preliminary economic analyses of three selected interventions, namely capping of wells, hand boring in karez wells and artificial recharge are reported in this chapter. These preliminary analyses are based on certain assumptions because the results about the performance of these interventions are not yet known. Detailed monitoring of these experimental improvements has been initiated, the results of which will be available after a few years. Only direct benefits and costs have been considered. Indirect benefits have been ignored due to the difficulties involved in their quantification, especially at this early stage.

4.2 METHODOLOGY

The following methodology has been adopted in carrying out the economic analysis of the improvement techniques :

i) Conversion of Benefits and Costs to Economic Values :

a) Benefits :

To convert the financial benefits and costs to economic values, a standard conversion factor of 0.82 [1/] has been adopted.

b) Wages :

A shadow wage rate of 0.70 [1/] has been assumed to arrive at the economic values of the wages paid to the labourers.

c) Financial Costs :

In order to calculate the economic values, the costs incurred on various improvement activities have been judged to split these into labour costs and other costs. The breakdown of costs is given as under :

1. Guide to Shadow Pricing of Scheme Costs and Benefits, TAT, BMIADP, July, 1986.

U/

(000 Rs.)

Activity	Financial Costs	Labour Costs		Other Costs	
		Factor	Costs	Factor	Costs
1. Capping of Karez Wells	241.64	15%	36.25	85%	205.39
2. Boring in Karez Wells	90.00	30%	27.00	70%	63.00
3. Reservoir for Karez Recharge	119.39	20%	23.88	80%	95.51
4. Gabion Bund	475.00	20%	95.00	80%	380.00

d) Economic Costs :

Economic costs of the various improvement activities works out as below :

Activity	Labour Costs			Other Costs			Total Economic Costs
	Fin: Costs	Factor	Eco: Costs	Fin: Costs	Factor	Eco: Costs	
1. Capping of Karez Wells	36.25	0.70	25.37	205.39	0.82	168.42	193.79
2. Boring in Karez Wells	27.00	0.70	18.90	63.00	0.82	51.66	70.56
3. Reservoir for Karez Recharge	23.88	0.70	16.72	95.51	0.82	78.32	95.04
4. Gabion Bund	95.00	0.70	66.50	380.00	0.82	311.60	378.10

ii) Determination of Benefits :

The determination of benefits of various improvement techniques is discussed as under :

a) Capping of Karez Wells :

The reduction in the karez cleaning and maintenance costs as a result of capping of karez wells is assumed the direct benefits for this activity. Traditionally, the cleaning of a karez has to be carried out in each year to keep the karez water flowing, as revealed by the bench mark survey of karez irrigation system. It is anticipated that due to capping of karez wells, the frequency of karez cleaning will be reduced by four times, i.e. once in 5 years instead of each year. This will result in saving a substantial amount, thus bringing out immediate impacts on the farmers incomes and on the economy of karez irrigated lands.

The cleaning and maintenance costs for Karez Abdul Hakim were determined as Rs.102,590 in the karez system's bench mark report. The economic value of this figure works out to be Rs.84.12 thousand. The life of the caps installed is taken as 20 years. It is assumed that caps will require varnishing and oiling annually to protect them from weather effects. An amount of Rs.8,000 will be required annually, the economic value for which works out to be Rs.6,560.

b) Boring Inside the Karez Wells :

Tapping the deeper groundwater is a continuous activity on the part of karez owners. Traditionally, they used to lower the level of karez tunnel for this purpose. The completion of this activity was prolonged over years and resulted in the uneconomic use of their resources. On the basis of the findings of the bench mark study, this particular aspect was given due consideration and it was decided to test bore holes inside some of the yielding wells of Khanozai Karez for tapping more water.

Two types of boring techniques were available. One was hand percussion boring and the other was boring with rigs. As far as the second option was concerned, it was a costly device. So it was decided to adopt the first. The idea underlaying the adoption of this technique was that it was a cheaper one and was within easy access of the farmers because all the tools used in this technique were locally made. Hand percussion boring in 6 wells was undertaken with varying depths with a total cost of Rs.90,000. The economic value for this figure works out to be Rs.70,560.

The discharge of karez has increased by 0.20 Cfs. as a result of boring activity. The benefits of this amount of additional water have been worked out by considering the usual cropping pattern of this karez, as was determined in the bench mark study of karez irrigation system. Annual benefits per acre foot of water on the basis of bench mark report works out to be Rs.3234. Benefits for additional water have been estimated based on this figure, which comes to Rs.345,990. The economic benefits calculate to Rs.284,970. This activity will not require any recurring costs.

c) Artificial Recharge of Water :

In order to test the water recharge effects on karez discharge, an earthen storage reservoir has been built at a suitable site on karez Jungle Bundat. It has a storing capacity of about 387,200 Cu.ft. of water. This reservoir is expected to be filled at least 4 times in a year. Since the water which will be diverted into this reservoir will be silt free, all the water except evaporation is expected to be recharged into the aquifer. In total, about 26 acre-ft. of water will be recharged annually. It is assumed that the reservoir will remain intact for 30 years.

An amount of Rs.119,390 has been spent on this experimental improvement, the economic value of which works out to be Rs.95,040. Annual maintenance costs for this reservoir have been assumed as Rs.7,800 or Rs.6,400 in economic terms.

Benefits per irrigated acre for karez Jungle Bundat worked out as Rs.65683 (economic Rs.53860) in the karez system's bench mark report. The benefits of additional water have been based on this figure. The bench mark report establishes that in Jungle Bundat Karez area one acre of land is being irrigated with an acre ft. of water. The total area of Jungle Bandat is 118 acres which is anticipated to come under crops in full. The benefits of 26 acre ft. of water works out to be Rs.1,400,370. It is further assumed that the existing cropping pattern will be practiced by the farmers.

d) Gabion Bund :

A gabion bund has been constructed upstream of the portion of karez tunnel passing beneath the bed of Kurram Manda. The purpose is to supplement the existing karez supplies by storing flood water with this bund. The capacity of the reservoir is 750,000 cft. (500' x 500' x 3'). Assuming evaporation loss as 15 percent, the net water availability comes to 637,500 cft. or 14.63 A.F. Based on two events per year, the annual water availability works out to be 29.27 A.F.

Benefits per acre-ft. of water for Karez Abdul Hakim comes to Rs.3883 and the total benefits as a result of additional karez supplies will amount to Rs.11,368,000 the economic value for which works out as Rs.93,220. The economic life of the reservoir is taken as 15 years, having an annual amount of Rs.7,800 (Rs.6,396 in economic terms) as its maintenance costs.

Limitations :

1. The dependability of the source of water running into the reservoir.

2. Uncertainity of water flowing into the reservoir and the time taken to fill the reservoir.

3. Uncertainity of period in which the water will be available.

4. Use of water by the owners at Karez Jungle Bundat.

4.3 RESULTS OF ANALYSIS

The details of the economic analysis of the above mentioned experimental improvements are given in Tables 4.1 to 4.12. The analyses show that these techniques are economically viable. A summary of the analyses is given in Table 4.13.

These analyses indicate that the improvement techniques installed on various karezes are economically feasible even though only primary benefits were considered. However, while studying these results, the basic limits of the system should be kept in view. The most important is the recharge of water through rain and snow. If the region receives enough rains and snow, the flow of the karezes will be increased and vice versa. Another important factor is the installation of tubewells in the vicinity of yielding wells of karezes, because pumping will surely reduce artesian pressure and flows in the hand bored karez wells.

4.4 SECONDARY IMPACT OF IMPROVEMENTS

In addition to the direct benefits, the installation of experimental improvements in three valleys of Baluchistan will generate a number of impacts on the general economic activity and social life of the area. Some of these are described here-under :

i) Introduction of ISMR Project :

The installation of improvement in three valleys of Baluchistan has brought widespread recognition to the project in the province. Farmers are convinced with the credibility of the

project. This has made the research task easier for the Project staff. Farmers cooperate by providing the data and offering their comments to improve the project proposals. Farmers who visit the installed improvements enthusiastically return home to try these on their karezes.

ii) Physical Impact on Environment :

Physical impact of one of the improvements, especially the installation of lids on karez wells, has been very prominent. The heaps of soil along the chain of wells, have been removed before the installation of lids resulting in considerable saving of land. The risk of humans and animals falling into the karez wells has been eliminated.

iii) Reaction of Research Organizations and Administrators :

As reported by the owners of the karez, many farmers have visited and seen the lids since their installation. They continue to come and their enthusiastic response indicate a high degree of acceptance.

Increase in water because of hand boring in karez wells at the Khanozai Karez has also shown great acceptance by the farmers. They recognize the significance of an additional 0.20 cfs. of water at a time when the discharge of the karez was decreased due to the prolonged dry spell. This additional water has saved their orchards from possible irrecoverable damage. This improvement has left very positive effects on the farmers and many of them plan to undertake hand boring in their dug wells, provided there exist favourable artesion conditions.

iv) Adoption of Better Cropping Pattern :

There is every likelihood that with the increased karez supplies, farmers (mainly the fruit growers) will be inclined to adopt better cropping patterns and improved varieties of crops.

v) Improvement of Socio-Economic Infrastructure :

With the increased economic activity due to the improvement techniques, the need for improved socio-economic infrastructure such as roads, schools, etc. will emerge and their provision will accelerate the pace of development in the area.

TABLE 4.1

CASH FLOW STATEMENT-KAREZ CAPPING

YEARS	BENEFITS			COSTS OF CAPPING THE KAREZ WELLS	NET INCREMEN-TAL BENE-FITS	PRESENT WORTH OF NET INCREMENTAL BENEFITS @	
	CLEANING & MAINTENANCE COSTS BEFORE CAPPING (000RS)	CLEANING & MAINTENANCE COSTS AFTER CAPPING (000RS)	SAVING IN COSTS DUE TO CAPPING (BENEFITS) (000RS)	(000RS)	(000RS)	30% (000RS)	40% (000RS)
1	2	3	4	5	6	7	8
1	84.12	84.12	0.00	193.79	-193.79	-149.07	-138.42
2	84.12		84.12	6.56	77.56	45.89	39.57
3	84.12		84.12	6.56	77.56	35.30	28.27
4	84.12		84.12	6.56	77.56	27.16	20.19
5	84.12		84.12	6.56	77.56	20.89	14.42
6	84.12	84.12	0.00	6.56	-6.56	-1.36	-0.87
7	84.12		84.12	6.56	77.56	12.36	7.36
8	84.12		84.12	6.56	77.56	9.51	5.26
9	84.12		84.12	6.56	77.56	7.31	3.75
10	84.12		84.12	6.56	77.56	5.63	2.68
11	84.12	84.12	0.00	6.56	-6.56	-0.37	-0.16
12	84.12		84.12	6.56	77.56	3.33	1.37
13	84.12		84.12	6.56	77.56	2.56	0.98
14	84.12		84.12	6.56	77.56	1.97	0.70
15	84.12		84.12	6.56	77.56	1.52	0.50
16	84.12	84.12	0.00	6.56	-6.56	-0.10	-0.03
17	84.12		84.12	6.56	77.56	0.90	0.25
18	84.12		84.12	6.56	77.56	0.69	0.18
19	84.12		84.12	6.56	77.56	0.53	0.13
20	84.12		84.12	6.56	77.56	0.41	0.09
TOTAL						25.06	-13.79

INTERNAL RATE OF RETURN = (%) 36.45

TABLE 4.2

CASH FLOW STATEMENT-BORING INSIDE KAREZ WELLS

YEARS	BENEFITS WITH BORING		COSTS OF BORING KAREZ WELLS (000 RS)	NET INCRE-MENTAL BENEFITS (000 RS)	PRESENT WORTH OF NET INCREMENTAL BENEFITS @	
	INCRE-ASE IN DIS-CHARGE (A.F.)	TOTAL BENE-FITS (000 RS)			40% (000 RS)	50% (000 RS)
1	2	3	4	5	6	7
1	0.00	0.00	70.56	-70.56	-50.40	-47.04
2	107.46	284.97	0.00	284.97	145.39	126.65
3	107.46	284.97	0.00	284.97	103.85	84.44
4	107.46	284.97	0.00	284.97	74.18	56.29
5	107.46	284.97	0.00	284.97	52.99	37.53
6	70.92	188.07	0.00	188.07	24.98	16.51
7	70.92	188.07	0.00	188.07	17.84	11.01
8	70.92	188.07	0.00	188.07	12.74	7.34
9	70.92	188.07	0.00	188.07	9.10	4.89
10	70.92	188.07	0.00	188.07	6.50	3.26
11	35.46	94.04	0.00	94.04	2.32	1.09
12	35.46	94.04	0.00	94.04	1.66	0.72
13	35.46	94.04	0.00	94.04	1.18	0.48
14	35.46	94.04	0.00	94.04	0.85	0.32
15	35.46	94.04	0.00	94.04	0.60	0.21
16	35.46	94.04	0.00	94.04	0.43	0.14
17	35.46	94.04	0.00	94.04	0.31	0.10
18	35.46	94.04	0.00	94.04	0.22	0.06
19	35.46	94.04	0.00	94.04	0.16	0.04
20	35.46	94.04	0.00	94.04	0.11	0.03
21	35.46	94.04	0.00	94.04	0.08	0.02
22	35.46	94.04	0.00	94.04	0.06	0.01
23	35.46	94.04	0.00	94.04	0.04	0.01
24	35.46	94.04	0.00	94.04	0.03	0.01
25	35.46	94.04	0.00	94.04	0.02	0.00
26	35.46	94.04	0.00	94.04	0.01	0.00
27	35.46	94.04	0.00	94.04	0.01	0.00
28	35.46	94.04	0.00	94.04	0.01	0.00
29	35.46	94.04	0.00	94.04	0.01	0.00
30	35.46	94.04	0.00	94.04	0.00	0.00
Total					405.30	304.14

TABLE 4.3

CASH FLOW STATEMENT-RESERVOIR FOR KAREZ RECHARGE

YEARS	BENEFITS WITH RESERVOIR		COSTS OF CONSTRUC-TING RESERVOIR (000 RS)	NET INCRE-MENTAL BENEFITS (000 RS)	PRESENT WORTH OF NET INCREMENTAL BENEFITS @	
	INCREASE IN DISCHA-RGE (A.F.)	TOTAL BENE-FITS (000 RS)			40% (000 RS)	50% (000 RS)
1	2	3	4	5	6	7
1	0.00	0.00	95.04	-95.04	-67.89	-63.36
2	26.00	1400.37	6.40	1393.97	711.21	619.54
3	26.00	1400.37	6.40	1393.97	508.01	413.03
4	26.00	1400.37	6.40	1393.97	362.86	275.35
5	26.00	1400.37	6.40	1393.97	259.19	183.57
6	26.00	1400.37	6.40	1393.97	185.13	122.38
7	26.00	1400.37	6.40	1393.97	132.24	81.59
8	26.00	1400.37	6.40	1393.97	94.46	54.39
9	26.00	1400.37	6.40	1393.97	67.47	36.26
10	26.00	1400.37	6.40	1393.97	48.19	24.17
11	26.00	1400.37	6.40	1393.97	34.42	16.12
12	26.00	1400.37	6.40	1393.97	24.59	10.74
13	26.00	1400.37	6.40	1393.97	17.56	7.16
14	26.00	1400.37	6.40	1393.97	12.54	4.78
15	26.00	1400.37	6.40	1393.97	8.96	3.18
16	26.00	1400.37	6.40	1393.97	6.40	2.12
17	26.00	1400.37	6.40	1393.97	4.57	1.41
18	26.00	1400.37	6.40	1393.97	3.27	0.94
19	26.00	1400.37	6.40	1393.97	2.33	0.63
20	26.00	1400.37	6.40	1393.97	1.67	0.42
21	26.00	1400.37	6.40	1393.97	1.19	0.28
22	26.00	1400.37	6.40	1393.97	0.85	0.19
23	26.00	1400.37	6.40	1393.97	0.61	0.12
24	26.00	1400.37	6.40	1393.97	0.43	0.08
25	26.00	1400.37	6.40	1393.97	0.31	0.06
26	26.00	1400.37	6.40	1393.97	0.22	0.04
27	26.00	1400.37	6.40	1393.97	0.16	0.02
28	26.00	1400.37	6.40	1393.97	0.11	0.02
29	26.00	1400.37	6.40	1393.97	0.08	0.01
30	26.00	1400.37	6.40	1393.97	0.06	0.01
TOTAL					2421.21	1795.26

INTERNAL RATE OF RETURN = (%) >50

50

TABLE 4.4

CASH FLOW STATEMENT-GABION BUND FOR KAREZ RECHARGE

YEARS	BENEFITS WITH GABION BUND		COSTS OF CONSTRUC-TING GABION BUND (000 RS)	NET INCRE-MENTAL BENEFITS (000 RS)	PRESENT WORTH OF NET INCREMENTAL BENEFITS @	
	INCREASE IN DISCHA-RGE (A.F.)	TOTAL BENE-FITS (000 RS)			20% (000 RS)	25% (000 RS)
1	2	3	4	5	6	7
1	0.00	0.00	378.10	-378.10	-315.08	-302.08
2	29.27	93.27	6.40	86.87	60.33	55.60
3	29.27	93.27	6.40	86.87	50.27	44.48
4	29.27	93.27	6.40	86.87	41.89	35.58
5	29.27	93.27	6.40	86.87	34.91	28.47
6	29.27	93.27	6.40	86.87	29.09	22.77
7	29.27	93.27	6.40	86.87	24.24	18.22
8	29.27	93.27	6.40	86.87	20.20	14.57
9	29.27	93.27	6.40	86.87	16.84	11.66
10	29.27	93.27	6.40	86.87	14.03	9.33
11	29.27	93.27	6.40	86.87	11.69	7.46
12	29.27	93.27	6.40	86.87	9.74	5.97
13	29.27	93.27	6.40	86.87	8.12	4.78
14	29.27	93.27	6.40	86.87	6.77	3.82
15	29.27	93.27	6.40	86.87	5.64	3.06
TOTAL					18.69	-36.71

INTERNAL RATE OF RETURN = (%) 21.69

TABLE 4.5

PRESENT WORTH OF BENEFITS - KAREZ CAPPING

(000 Rs.)

YEARS	INCREMEN-TAL BENEFITS	PRESENT WORTH OF BENEFITS @			
		20%	30%	40%	50%
1	0.00	0.00	0.00	0.00	0.00
2	84.12	58.42	49.78	42.92	37.39
3	84.12	48.68	38.29	30.66	24.92
4	84.12	40.57	29.45	21.90	16.62
5	84.12	33.81	22.66	15.64	11.08
6	0.00	0.00	0.00	0.00	0.00
7	84.12	23.48	13.41	7.98	4.92
8	84.12	19.56	10.31	5.70	3.28
9	84.12	16.30	7.93	4.07	2.19
10	84.12	13.59	6.10	2.91	1.46
11	0.00	0.00	0.00	0.00	0.00
12	84.12	9.43	3.61	1.48	0.65
13	84.12	7.86	2.78	1.06	0.43
14	84.12	6.55	2.14	0.76	0.29
15	84.12	5.46	1.64	0.54	0.19
16	0.00	0.00	0.00	0.00	0.00
17	84.12	3.79	0.97	0.28	0.09
18	84.12	3.16	0.75	0.20	0.06
19	84.12	2.63	0.58	0.14	0.04
20	84.12	2.19	0.44	0.10	0.03
TOTAL	-	295.49	190.83	136.33	103.62

TABLE 4.6

PRESENT WORTH OF BENEFITS
HAND PERCUSSION BORING

(000 Rs.)

YEARS	INCREMENTAL BENEFITS	PRESENT WORTH OF BENEFITS @			
		20%	30%	40%	50%
1	0.00	0.00	0.00	0.00	0.00
2	284.97	197.90	168.62	145.39	126.65
3	284.97	164.91	129.71	103.85	84.44
4	284.97	137.43	99.78	74.18	56.29
5	284.97	114.52	76.75	52.89	37.53
6	188.07	62.98	38.96	24.98	16.51
7	188.07	52.49	29.97	17.84	11.01
8	188.07	43.74	23.06	12.74	7.34
9	188.07	36.45	17.73	9.10	4.89
10	188.07	30.37	13.64	6.50	3.26
11	94.04	12.66	5.25	2.32	1.09
12	94.04	10.55	4.04	1.66	0.72
13	94.04	8.79	3.10	1.18	0.43
14	94.04	7.32	2.39	0.85	0.32
15	94.04	6.10	1.84	0.60	0.21
16	94.04	5.09	1.41	0.43	0.14
17	94.04	4.24	1.09	0.31	0.10
18	94.04	3.53	0.84	0.22	0.06
19	94.04	2.94	0.64	0.16	0.04
20	94.04	2.45	0.49	0.11	0.03
21	94.04	2.04	0.38	0.08	0.02
22	94.04	1.70	0.29	0.06	0.01
23	94.04	1.42	0.23	0.04	0.01
24	94.04	1.18	0.17	0.03	0.01
25	94.04	0.99	0.13	0.02	0.00
26	94.04	0.82	0.10	0.01	0.00
27	94.04	0.68	0.08	0.01	0.00
28	94.04	0.57	0.06	0.01	0.00
29	94.04	0.48	0.05	0.01	0.00
30	94.04	0.40	0.04	0.00	0.00
TOTAL		914.75	620.84	455.70	351.18

53

TABLE 4.7

PRESENT WORTH OF BENEFITS
RECHARGE THROUGH RESERVOIR

(000 Rs.)

YEARS	INCREMENTAL BENEFITS	PRESENT WORTH OF BENEFITS			
		20%	30%	40%	50%
1	0.00	0.00	0.00	0.00	0.00
2	1400.37	972.48	828.62	714.47	622.39
3	1400.37	810.40	637.40	510.34	414.92
4	1400.37	675.33	490.31	364.53	276.62
5	1400.37	562.78	177.16	260.38	184.41
6	1400.37	468.98	290.12	185.98	122.94
7	1400.37	390.82	223.17	132.85	81.96
8	1400.37	325.68	171.67	94.98	54.64
9	1400.37	271.40	132.05	67.78	36.43
10	1400.37	226.17	101.58	84.41	24.28
11	1400.37	188.47	78.14	34.58	16.19
12	1400.37	157.06	60.11	24.70	10.79
13	1400.37	130.88	46.24	17.64	7.20
14	1400.37	109.07	35.57	12.60	4.80
15	1400.37	90.898	27.36	9.00	3.20
16	1400.37	75.74	21.05	6.43	2.13
17	1400.37	63.12	16.19	4.59	1.42
18	1400.37	52.60	12.45	3.28	0.95
19	1400.37	43.83	9.58	2.34	0.63
20	1400.37	36.53	7.37	1.67	0.42
21	1400.37	30.44	5.67	1.20	0.28
22	1400.37	25.37	4.36	0.85	0.19
23	1400.37	21.14	3.35	0.61	0.12
24	1400.37	17.62	2.58	0.44	0.08
25	1400.37	14.68	1.98	0.31	0.06
26	1400.37	12.23	1.53	0.22	0.04
27	1400.37	10.19	1.17	0.16	0.02
28	1400.37	8.50	0.90	0.11	0.02
29	1400.37	7.08	0.69	0.08	0.01
30	1400.37	5.90	0.53	0.06	0.01
TOTAL		5805.38	3588.91	2500.52	1867.15

TABLE 4.8

PRESENT WORTH OF BENEFITS
RECHARGE THROUGH GABION BUND

(000Rs.)

YEARS	INCREMEN-TAL BENEFITS	PRESENT WORTH OF BENEFITS @			
		20%	30%	40%	50%
1	0.00	0.00	0.00	0.00	0.00
2	93.27	64.77	55.19	47.59	41.45
3	93.27	53.98	42.45	33.99	27.64
4	93.27	44.98	32.66	24.28	18.42
5	93.27	37.48	25.12	17.34	12.28
6	93.27	31.24	19.32	12.39	8.19
7	93.27	26.03	14.86	8.85	5.46
8	93.27	21.69	11.43	6.32	3.64
9	93.27	18.08	8.80	4.51	2.43
10	93.27	15.06	6.77	3.22	1.62
11	93.27	12.55	5.20	2.30	1.08
12	93.27	10.46	4.00	1.65	0.72
13	93.27	8.72	3.08	1.18	0.48
14	93.27	7.26	2.37	0.84	0.32
15	93.27	6.05	1.82	0.60	0.21
TOTAL		358.36	233.08	165.05	123.93

TABLE 4.9

PRESENT WORTH OF COSTS - KAREZ CAPPING

(000 Rs.)

YEARS	CAPPING COSTS	PRESENT WORTH OF COSTS @			
		20%	30%	40%	50%
1	193.79	161.49	149.07	138.42	129.19
2	6.56	4.56	3.88	3.35	2.92
3	6.56	3.80	2.99	2.39	1.94
4	6.56	3.16	2.30	1.71	1.30
5	6.56	2.64	1.77	1.22	0.86
6	6.56	2.20	1.26	0.87	0.58
7	6.56	1.83	1.05	0.62	0.38
8	6.56	1.53	0.80	0.44	0.26
9	6.56	1.27	0.62	0.32	0.17
10	6.56	1.06	0.48	0.23	0.11
11	6.56	0.88	0.37	0.16	0.08
12	6.56	0.74	0.28	0.12	0.05
13	6.56	0.61	0.22	0.08	0.03
14	6.56	0.51	0.17	0.06	0.02
15	6.56	0.43	0.13	0.04	0.01
16	6.56	0.35	0.10	0.03	0.01
17	6.56	0.30	0.08	0.02	0.01
18	6.56	0.25	0.06	0.02	0.00
19	6.56	0.21	0.04	0.01	0.00
20	6.56	0.17	0.03	0.01	0.00
TOTAL		187.97	165.77	150.12	137.94

56

TABLE 4.10

PRESENT WORTH OF COSTS
HAND PERCUSSION BORING

(000 Rs.)

YEARS	INCREMEN-TAL COSTS	PRESENT WORTH OF COSTS			
		20%	30%	40%	50%
1	70.56	58.80	54.28	50.40	47.04
2	0.00	0.00	0.00	0.00	0.00
3	0.00	0.00	0.00	0.00	0.00
4	0.00	0.00	0.00	0.00	0.00
5	0.00	0.00	0.00	0.00	0.00
6	0.00	0.00	0.00	0.00	0.00
7	0.00	0.00	0.00	0.00	0.00
8	0.00	0.00	0.00	0.00	0.00
9	0.00	0.00	0.00	0.00	0.00
10	0.00	0.00	0.00	0.00	0.00
11	0.00	0.00	0.00	0.00	0.00
12	0.00	0.00	0.00	0.00	0.00
13	0.00	0.00	0.00	0.00	0.00
14	0.00	0.00	0.00	0.00	0.00
15	0.00	0.00	0.00	0.00	0.00
16	0.00	0.00	0.00	0.00	0.00
17	0.00	0.00	0.00	0.00	0.00
18	0.00	0.00	0.00	0.00	0.00
19	0.00	0.00	0.00	0.00	0.00
20	0.00	0.00	0.00	0.00	0.00
21	0.00	0.00	0.00	0.00	0.00
22	0.00	0.00	0.00	0.00	0.00
23	0.00	0.00	0.00	0.00	0.00
24	0.00	0.00	0.00	0.00	0.00
25	0.00	0.00	0.00	0.00	0.00
26	0.00	0.00	0.00	0.00	0.00
27	0.00	0.00	0.00	0.00	0.00
28	0.00	0.00	0.00	0.00	0.00
29	0.00	0.00	0.00	0.00	0.00
30	0.00	0.00	0.00	0.00	0.00
TOTAL		58.80	54.28	50.40	47.04

57

TABLE 4.11

PRESENT WORTH OF COSTS
RECHARGE THROUGH RESERVOIR

(000 Rs.)

YEARS	RESERVOIR COSTS	PRESENT WORTH OF COSTS			
		20%	30%	40%	50%
1	95.04	79.20	73.11	67.89	63.36
2	6.40	4.44	3.79	3.27	2.84
3	6.40	3.70	2.91	2.33	1.90
4	6.40	3.09	2.24	1.67	1.26
5	6.40	2.57	1.72	1.19	0.84
6	6.40	2.14	1.33	0.85	0.56
7	6.40	1.79	1.02	0.61	0.37
8	6.40	1.49	0.78	0.43	0.25
9	6.40	1.24	0.60	0.31	0.17
10	6.40	1.03	0.46	0.22	0.11
11	6.40	0.86	0.36	0.16	0.07
12	6.40	0.72	0.27	0.11	0.05
13	6.40	0.60	0.21	0.08	0.03
14	6.40	0.50	0.16	0.06	0.02
15	6.40	0.42	0.13	0.04	0.01
16	6.40	0.35	0.10	0.03	0.01
17	6.40	0.29	0.07	0.02	0.01
18	6.40	0.24	0.06	0.01	0.00
19	6.40	0.20	0.04	0.01	0.00
20	6.40	0.17	0.03	0.01	0.00
21	6.40	0.14	0.03	0.01	0.00
22	6.40	0.12	0.02	0.00	0.00
23	6.40	0.10	0.02	0.00	0.00
24	6.40	0.08	0.01	0.00	0.00
25	6.40	0.07	0.01	0.00	0.00
26	6.40	0.06	0.01	0.00	0.00
27	6.40	0.05	0.01	0.00	0.00
28	6.40	0.04	0.00	0.00	0.00
29	6.40	0.03	0.00	0.00	0.00
30	6.40	0.03	0.00	0.00	0.00
TOTAL		105.73	89.51	79.31	71.89

TABLE 4.12

PRESENT WORTH OF COSTS
RECHARGE THROUGH GABION BUND

(000 Rs.)

YEARS	RESERVOIR COSTS	PRESENT WORTH OF COSTS @			
		20%	30%	40%	50%
1	378.10	315.08	290.85	270.07	252.07
2	6.40	4.44	3.79	3.27	2.84
3	6.40	3.70	2.91	2.33	1.90
4	6.40	3.09	2.24	1.67	1.26
5	6.40	2.57	1.72	1.19	0.84
6	6.40	2.14	1.33	0.85	0.56
7	6.40	1.79	1.02	0.61	0.37
8	6.40	1.49	0.78	0.43	0.25
9	6.40	1.24	0.60	0.31	0.17
10	6.40	1.03	0.46	0.22	0.11
11	6.40	0.86	0.36	0.16	0.07
12	6.40	0.72	0.27	0.11	0.05
13	6.40	0.60	0.21	0.08	0.03
14	6.40	0.50	0.16	0.06	0.02
15	6.40	0.42	0.13	0.04	0.01
TOTAL		339.67	306.84	281.40	260.57

59

TABLE 4.13

NET PRESENT VALUE AND BENEFIT COST RATIO

A:KAREZ CAPPING

(000 Rs.)

RATE OF INTEREST:	20%	30%	40%	50%
P.V. OF BENEFITS:	295.49	190.83	136.33	103.62
P.V. OF COSTS:	187.97	165.77	150.12	137.94
N.P.V.	107.52	25.06	-13.79	-34.32
B.C.R.	1.57:1	1.15:1	0.91:1	0.75:1

B:HAND PERCUSSION BORING

(000 Rs.)

RATE OF INTEREST:	20%	30%	40%	50%
P.V. OF BENEFITS:	914.75	620.84	455.70	351.18
P.V. OF COSTS:	58.80	54.28	50.40	47.04
N.P.V.	855.95	566.56	405.03	304.14
B.C.R.	15.57:1	11.44:1	9.04:1	7.47:1

C:RESERVOIR FOR RECHARGE

(000 Rs.)

RATE OF INTEREST:	20%	30%	40%	50%
P.V. OF BENEFITS:	5805.38	3588.91	2500.52	1867.15
P.V. OF COSTS:	105.73	89.91	79.31	71.89
N.P.V.	5699.65	3499.04	2421.21	1795.26
B.C.R.	54.91:1	40.09:1	31.35:1	25.97:1

D:GABION BUND FOR RECHARGE

(000 Rs.)

RATE OF INTEREST:	20%	30%	40%	50%
P.V. OF BENEFITS:	358.36	233.08	165.05	123.93
P.V. OF COSTS:	339.67	306.84	281.40	260.57
N.P.V.	18.69	-73.76	-116.35	-136.64
B.C.R.	1.05:1	0.76:1	0.59:1	0.48:1

Annexure 1-1

RESEARCH PLAN FOR KAREZ IRRIGATION SYSTEM

TITLE: **KAREZ REHABILITATION AND IMPROVEMENT.**

JUSTIFICATION:

Karezes are an ancient method of developing ground water supplies existing in the talus slopes below nallahs discharging from hilly areas. These are constructed by digging an esssentialy horizontal bore tunnel into a sloping water table in unconsolidated aquifers. Tunnel excavation is facilitated by the use of access wells dug from the ground level to the tunnel level every 50 to 100's. These are used for light, ventilation and removal of excavated material. If left unprotected, these wells erode when it rains causing material to fall into the tunnel and reduce the flow area- even blocking the flow entirely. The tunnel also erodes as it is continuously wet. The karez tunnel may lose a good portion of its kflow back to the ground water through seepage throughout its length. Karez cleaning is a dangerous and tedious job and workers willing to do this job becoming scarce.

OBJECTIVES:

1. To determine the status of physical condition and rehabilitation and improvement needs of karezes.
2. To investigate techniques of curbing and capping access wells to prevent erosion.
3. To investigate alternate methods of cleaning of karezes.
4. To investigate methods of lining of karez tunnels.
5. To investigate methods of making a permanent infiltration section of the karez.
6. To investigate water table control measures to increase karez flow.

PROCEDURE:

OBJECTIVE 1.

A survey of several karezes will be conducted to determine their physical dimensions and condition. This would include condition of access wells, flow measurement, identification of tunnel loss areas, tunnel slope and length etc. Data on the organization of the karez would also be obtained by interviewing the shareholders. A questionnaire will be developed to collect information from the share-holders.

OBJECTIVE 2.

The use of both precast concrete and fiberglass caps be investigated. Cast concrete caps will probably be used. The curb and cap should be raised above the normal ground level and the piles of accumulated cleanings should be scattered so that there is adequate drainage away from the access well.

OBJECTIVE 3.

The normal method of cleaning karezes is the use hand labor and a windlass to raise the cleanings to the surface. Alternate methods of cleaning will be investigated. These include using pumps such as a diaphragm pump and pipeline to remove debris from the tunnel. A high pressure jet might be used to loosen the accumulated debris in the tunnel.

OBJECTIVE 4.

The use of rigid plastic pipe placed in the karez tunnel to convey the water will be investigated. The pipe would be sized according to the flow and the slope of the karez tunnel. Types of pipe and methods of installation would be investigated. If the karez tunnel is not totally blocked at any point perhaps the pipe can be installed without having to clean the total length of the karez. Only the last few hundred feet of the tunnel might need to be cleaned.

OBJECTIVE 5.

Methods of installing a permanent intake section in the infiltration or source area of the karez will be investigated. Perforated pipe sections and a gravel filter could be installed. Other types of preformed intake sections can also be investigated.

OBJECTIVE 6.

If the geologic setting is suitable it may be posible to raise the table in the karez source area by use of grout curtains, driven sheet metal coffer dams or plastic cutoff walls. All surveyed karezes will be examined for this possibility.

ANNEXURE 1-2

CONCLUSIONS AND RESEARCH NEEDS

Based on the data/information collected from the bench mark study, following conclusions were reached and a list of the problems requiring research was prepared as follows:

CONCLUSIONS

1. Water loss in the open channles conveying water from the karez daylight to the command area is in the range of 24 % to 64 % per 1000 ft. length of channel.

2. Legth of karezes varies from 2804 ft. to 14716 ft. with an average length of 3835 ft.

3. Number of access wells on a karez ranges from 15 to 138 and an average 34 wells.

4. The depth of access wells ranges from 24 ft. to 134 ft. and averaged 31 ft.

5. Number of yielding wells usually range between 1 to 5 on a karez.

6. Karez owners tend to cap the wells and maintain the cross-section of the karez tunnel using conventional techniques.

7. Annual cleaning and maintenance costs vary from new to old karezes.

8. Average annual cleaning cost ranges from Rs.80,000 to Rs.1,50,000

9. Traditional cropping patterns are being followed.

10. Managerial practices varies from Pathan inhabited areas to Baluch inhabited areas.

11. Karezes in operation are likely to be kept in operation even after the extension of electricity and installation of tubewells beacuse of the merits of the system if they are not in areas where the groundwater levels are affected by tubewell pumping.

PROBLEMS NEEDING RESEARCH

Research on following problems related to karez irrigation is recommended.

1. Materials, types and methods form lining karez tunnels and feasibility of tunnel lining need to be investigated.

2. Technigues for increasing the discharge of a karez by increasing the groundwater recharge should be developed.

3. A digital model of the groundwater system around a karez needs to be developed so that certain techniques may be studied with the model before performing the more costly field research.

4. Long term monitoring of discharge of selected karezes for developing the pattern of groundwater fluctuations and monitoring of water quality to assist in irrigation management decisions are recommended.

5. Setting up meteorological stations for collecting the hydrometerological data of selected karezes would be beneficial to correlate the effect of rain on karez discharge.

6. Practical methods need to be developed for measuring the losses in the karez tunnels.

7. Experimental capping of karez wells to determine its effect on cleaning frequency is recommended.

8. Hand boring in the yielding wells to determine its effect on karez discharge where the hydraullics permits, need to be undertaken.

DESIGN OF LOW HEAD GABBION BUND IN KURRAM MANDA

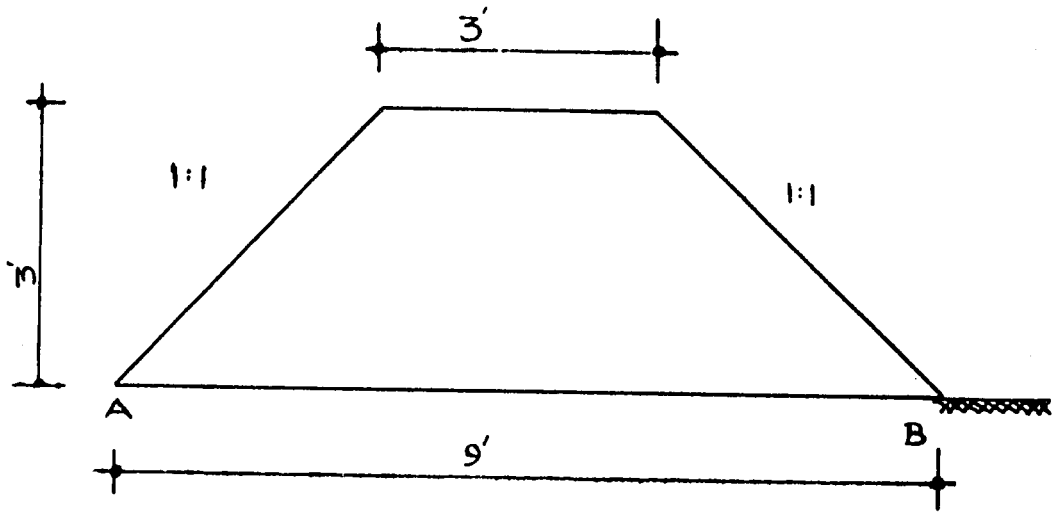

DESIGN PARAMETERS

Bw	=	9'	(Bottom Width)
Tw	=	3'	(Top Width)
H	=	3'	(Height of Bund)
Side Slope	=	1:1	

1. Self Weight = {2(1/2 x 3 x 3) + 3 x 3} x 1 x 140

   = 2520 lbs.

   Lever Arm from Toe 'B'

   2520 X = [(1/2x3x3) (6+1/3x3) + (3 x 3) (3+1.5) + (1/2x3x3) (2/3x3)] x 140

   2520 X = 11340

   X = 4.5'

   (4.5 ft. from Toe)

2. Weight of Water on Upstream Face = $W_W A$

$= 62.5 \times (1/2 \times 3 \times 3)$

$= 281.25$ Lbs.

Lever Arm from Toe 'B'

$X = 3 + 3 + 2/3 \times 3$

$X = 8'$

(8 ft. from Toe 'B')

3. Water Pressure $= \frac{Wwh^2}{2}$

$= \frac{62.5}{2} \times (3)^2$

$= 281.25$ Lbs.

Lever from Toe 'B' $= h/3 = 3/3 = 1'$
$=$ (1 ft. from Toe)

4. Weight of Silt on Upstream Face $= W_S A$

$= 100\ (1/2 \times 3 \times 3)$

$= 450$ Lbs.

Lever Arm from Toe 'B'

$= 3 + 3 + 2/3 \times 3$

$= 8'$

(8 ft. from Toe 'B')

5. Silt Pressure on Upstream Face $= \frac{W_S h^2}{2} \frac{(1 - \sin 0)}{(1 + \sin 0)}$

$= \frac{100\ (3)^2}{2} \frac{(1 - \sin 30)}{(1 + \sin 30)}$

$= 150$ Lbs.

Lever Arm from Toe 'B'

$= 1/3\ h = 1/3 \times 3 = 1'$
(1 ft. from Toe 'B')

67

6. Weight of Water on Downstream Face

$= W_w A$

$= 62.5 \quad (1/2 \times 1.5 \times 1.5)$

$= 70.31$ Lbs.

Lever Arm from Toe 'B'

$= 1/3\ h = 1/3 \times 1.5 = 0.5'$
(0.5 ft. from Toe 'B')

7. Water pressure on Downstream Face.

$= \frac{W_w h^2}{2}$

$= \frac{62.5}{2} \times (1.5)^2$

$= 70.31$ Lbs.

Lever Arm from Toe 'B'

$= 1/3\ h = 1/3 \times 1.5 = 0.5$ ft.
(0.5 ft. from Toe 'B')

8. Up-lift Pressure = Area of Up-lift Pressure Diagram

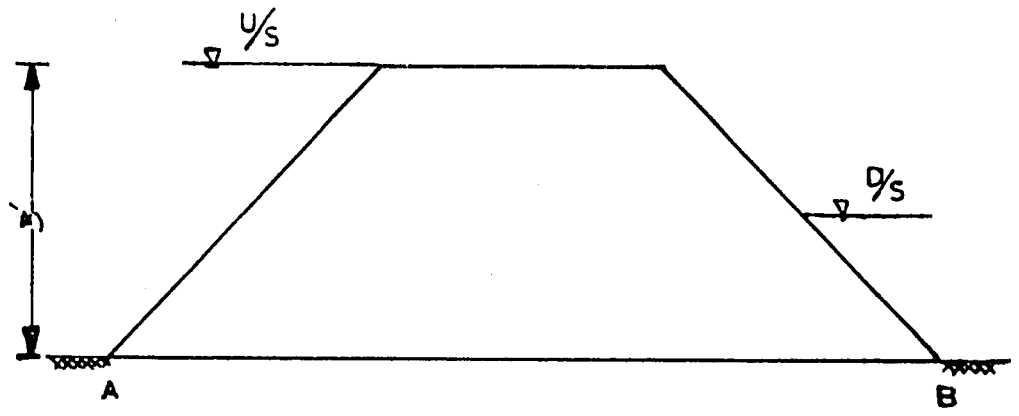

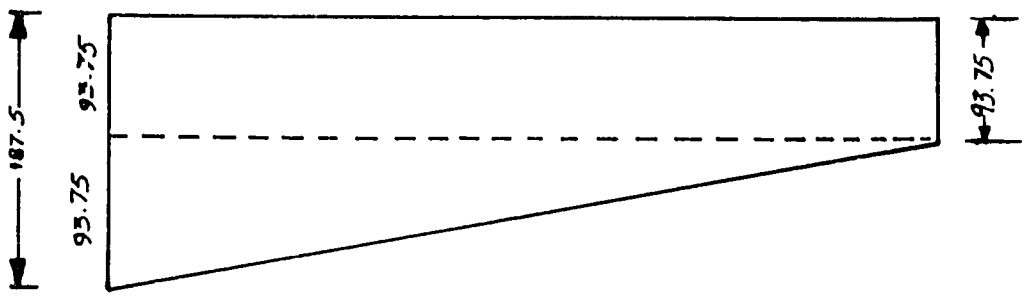

Depth of Water on Upstream Face = 3'

$W_w = 62.5$

$P = W_w h$

$P = 62.5 \times 3$

$P = 187.5$

Depth of Tail Water = 1.5'

$W_w = 62.5$

$P = W_w h$

$P = 62.5 \times 1.5$

$P = 93.75$

Area of Up-lift Diagram

= 93.75 x 9 + 1/2 x 9 x 93.75

= 1265.62 Lbs.

Lever Arm From Toe 'B'

= 1265.62 X = 93.75 x 9 x 4.5 + 1/2 x 93.75 x 9 x 2/3 x 9

= 1265.62 X = 6328.125

= 5'
(5 ft. from Toe'B')

RESERVOIR IN FULL CONDITION

1. V = 0(Summation of all vertical fources must be zero)

   V = 2520 + 281.25 + 450 - 1265.62 + 70.31

   V = 2055.94 Lbs.

2. H = 0 (Summation of all horizontal fources must be zero)

   H = 281.25 + 150 - 70.31

   H = 360.94 Lbs.

3. Resultant = R = $/H^2 + V^2$

   = $/(2055.94)^2 + (360.94)^2$

   = 2087.38 Lbs.

4. Inclination of Resultant with Horizontal

   Tan 0 = V/H

   0 = $\text{Tan}^{-1} \times V/H$

   0 = $\text{Tan}^{-1} \frac{2055.94}{360.94}$

   0 = 80° - 2' - 33.5"

5. M = 0 (Summation of all moments must be zero)

   - 2520 x 4.5' + 281.25 x 1 - 281.25 x 8 - 450 x 8 + 1265.62 x 5 + 150 x 1 - 70.31 x 0.5 - 70.31 x 0.5 = R X

   - 11340 + 281.25 - 2250 - 3600 + 6328.1 + 150 - 35.16 - 35.26 - 10501 = 2087.38 X

   X = 5'
   (5 ft. from Toe 'B')

RESERVOIR IN EMPTY CONDITION

1. $V = 0$ (Summation of all vertical forces must be zero)

   $V = 2520 + 450$

   $V = 2970$ Lbs.

2. $H = 0$

   $H = 150$ Lbs.

3. Resultant Force = $R = \sqrt{H^2 + V^2}$

   $= \sqrt{(150)^2 + (2970)^2}$

   $= 2973.78$

4. Inclination of Resultant with Horizontal

   $\tan 0 = V/H$

   $0 = \tan^{-1} V/H$

   $0 = \tan^{-1} \frac{2970}{150}$

   $0 = 19^{o} - 48' - 0''$

5. $M = 0$ (Summation of all moments must be zeor)

   $- 2520 \times 4.5 - 450 \times 8 + 150 \times 1$

   $= 2973.78\ X$

   $X = 4.95'$ Say 5'
   (5 ft. from Toe 'B')

72

CALCULATION FOR SCOURING DEPTH

Scouring Depth $= 0.9 \left[\frac{q^2}{f}\right]^{1/3}$

Q = 3473

b = 540

$q = \frac{Q}{b} = \frac{8473}{540}$

q = 15.69

f = 1.31 (For Medium Soil)

Scouring Depth $= 0.9 \left[\frac{(15.69)^2}{1.31}\right]^{1/3}$

= 5.14 ft.

= Say 5 ft.

F.O.S. = 2

Then = 2 x 5 = 10 ft. from N.S.L.