PN-ABU-474

UNITED STATES AGENCY FOR
INTERNATIONAL DEVELOPMENT

PRIVATE SECTOR POWER PROJECT

KOT ADDU POWER STATION

TECHNICAL DUE DILIGENCE

PERFORMED FOR

INTERNATIONAL RESOURCES GROUP, LTD.

NOVEMBER 1993

BEST AVAILABLE DOCUMENT

EXECUTIVE SUMMARY

The Kot Addu Gas Turbine Power Station (KAPS) consists of eight combustion turbines and two associated combined cycle turbines with a combined installed capacity of 1024 MW. These units were commissioned between 1987 and 1991. Currently under construction are two additional combustion turbines and two additional combined cycle turbines, which when all are commissioned by 1996 will bring the combined installed plant capacity to approximately 1550 MW.

The KAPS has been the subject of evaluation as a prelude to either commercialization and/or privatization. This report includes the Technical Due Diligence analyses of the gas turbine/combined cycle units at Kot Addu.

The initial Technical Due Diligence Report was completed in February and covered only Unit Nos. 1, 2, 3, 4, 9 and 10. The principal findings of this report ar as follow:

> The major components and systems are sound and incorporate proven design concepts and technology. The engineering and construction was carried out by firms which are world-wide leaders in electric generation design and installation.
>
> The biggest area of concern is related to the firing of furnace oil in the gas turbines. This fuel contains high levels of sulphur and vanadium, the combustion products of which adversely affects the hot gas components of the turbines and will reduce their life times and require more frequent maintenance and replacement. This problem could be alleviated if sufficient supplies of natural gas were allocated to the plant.

The second Technical Due Diligence Report, covering Units Nos. 5, 6, 7 and 8 was completed and issued in October 1993. The principal findings of this report are similar to those for the other units at the plant. In particular, the problems related to the burning of furnace oil have increased because of the unavailability of sufficient on-site storage facilities for the quantities of oil-water effluent produced by the treatment facility. However, steps are underway to install a new treatment facility which is designed to significantly reduce the quantity of waste product which would have to stored or otherwise disposed of.

The general observations of the due diligence teams regarding the entire plant are that the units were designed and constructed to generally accepted international standards and codes. The operation and maintenance of the plant is consistent with normal practice even though in some circumstances maintenance items have been deferred due to the overall requirements of the WAPDA power grid.

BEST AVAILABLE DOCUMENT

US AGENCY FOR INTERNATIONAL DEVELOPMENT
PRIVATE SECTOR POWER PROJECT

TECHNICAL DUE DILIGENCE

KOT ADDU POWER STATION
UNITS 5, 6, 7 AND 8

CONTROL WORK PLAN 2.33.0
FINAL REPORT

PERFORMED FOR:
INTERNATIONAL RESOURCES GROUP, LTD.

SUBMITTED BY:

DENNIS W. EVANS
JOHN T. BOYD CO.

OCTOBER 1993

BEST AVAILABLE DOCUMENT

SECTION I

TABLE OF CONTENTS

SECTION	DESCRIPTION	PAGE
I	TABLE OF CONTENTS	i
II	PROJECT TASK AND DESCRIPTION	1
III	FINDINGS AND RECOMMENDATIONS	2
IV	EQUIPMENT CONDITION AND ASSESSMENT	4
V	PLANT MAINTENANCE PROGRAMS	5
VI	ACTUAL V.S. DESIGN PERFORMANCE	7
VII	PLANT OPERATING PARAMETERS AND ACTIVITIES	9
VIII	CONDITIONS REQUIRING CORRECTION	10

BEST AVAILABLE DOCUMENT

SECTION II

PROJECT TASK AND DESCRIPTION
Units 5, 6, 7 & 8

The purpose of this document is to report findings and summaries of the Technical Due Diligence evaluation performed at Kot Addu Power Station on the operational units. This study, completed under Control Work Plan 2.33.0, was extended to assist WAPDA in the commercialization process of Kot Addu.

This report will cover units 5, 6, 7 and 8 which are manufactured by M/s Alsthom of France. The due diligence for units 1, 2, 3, 4, 9 and 10 was completed in February 1993 under Control Work Plan 1.40.1 and will be used to reference the common system to all units.

A visit of twenty days was made at Kot Addu. During this evaluation all units and practices were observed in detail. Key station personnel were interviewed. They were very cooperative and contributed freely and professionally to this report.

The Kot Addu power plant presently operates eight gas turbines and two combined cycle steam turbines with a name plate capacity rating of 1000 MW. Two additional steam turbines, two gas turbines and a steam turbine are under construction.

The station will then consist of five combined cycle units with a nominal capacity of 1548 MW at ISO conditions.

The Technical Due Diligence performed consists of an evaluation of units, systems, equipment, component design and performances. Operation and maintenance procedures and practices were also examined. The contents of this document are a summary of findings.

BEST AVAILABLE DOCUMENT

SECTION III

FINDINGS AND RECOMMENDATIONS

The purpose of this document is to report findings and summaries of the Technical Due Diligence performed at the Kot Addu Power Station. This study was completed under Control Work Plan (CWP) 2.33.0.

The Kot Addu power station is in the process of privatization. Previously a Technical Due Diligence was performed on units 1, 2, 3, 4, 9 and 10, along with associated interconnecting, auxiliary and ancillary equipment. This report will cover units 5, 6, 7 and 8 and any new issues that have arisen since February 1993.

At Kot Addu units no. 5, 6, 7 and 8 are manufactured by M/S Alsthom of France. These are basically General Electric design, featuring a single shaft, 17 compressor stages, axial flow with a turbine inlet temperature of 1985°F. The units were commissioned between November 1988 and April 1989 and are rated at 100 MW each at ISO conditions. It appears that these units were designed and constructed to meet international standards and codes applicable at the time. However, it was not always possible to locate documents which would verify compliance with such standards.

The single largest area of concern continues to be the fuel used and the attendant maintenance cost. Units 5, 6, 7 and 8 were designed to burn HSD (High Speed Diesel), but were converted to burn furnace oil in 1989 and it remains the fuel of choice, due to the first cost of HSD. There are plans to convert units 5, 6, 7 and 8 to gas in the next year, but until they are guaranteed a gas supply sufficient enough to run the entire plant, furnace oil will remain the predominate fuel. The quality of the furnace oil received is poor and costly to treat. Continued burning of furnace oil in these units will significantly shorten the life times of hot gas path components and will necessitate more frequent maintenance and replacement of the parts. Use of this fuel is largest contributor to the increased maintenance cost at the station. At present over 50% of WAPDA entire maintenance spare parts budget is allocated to the Kot Addu Station.

The furnace oil that the station receives contains an excessive amount of sodium and vanadium which must be removed before combustion. When the station is running with units 1, 2, 5, 6, 7 and 8 burning furnace oil they produce 400 tons per day (800,000 gal.) of an oil/water waste product which cannot be used as fuel.

Two different methods have been tried to separate the water and re-treat the oil. One was to heat the waste to evaporate the water, and the other was to let it set and drain the water from beneath. Neither method produced a satisfactory result.

BEST AVAILABLE DOCUMENT

A third option used by station management was to add aluminum sulphate to one tank, heat and recirculate and dispose of the water. The residue is a waste oil that cannot be treated and used as fuel because of the aluminum sulphate.

Presently there are 40,000 tons of waste product on site stored in four fuel tanks and within the berms of these tanks. This situation has arisen because of the inability of the petrolite units to remove the water from the oil. In addition the fuel storage capacity of the facility has been reduced by 20%.

The station is in the process of installing a new treatment facility to enable them to recover the oil and treat the waste water to the point where it can be discharged to the canal. This unit is proposed to be completed by April of 1994. As a stop gap method Kot Addu intends to contract tankers to transport the present waste product to Multan and Muzaffargar at a rate of 250 T per day.

Unit 5 recently had a major overhaul due to high vibration and shaft seizure. Discussion with plant personnel indicated this problem arose after a major fire was experienced in January 1990. In April 1990 unit was overhauled and major parts were changed out.

During the most recent outage (March through June 1993) shaft bearings on Unit 5 were found damaged and were replaced again. Plant personnel believe this problem is being caused by a casing distortion and have requested M/s Alsthom to provide some help in solving this problem.

The reliability of fuel oil supply pumps are another concern; since the units' initial startup, five pumps have been replaced at a cost of $ 50,000 each.

Based on meetings and interviews, it appears that every one is aware of the high operating cost for Kot Addu. Plant management realizes that this situation will continue until a major preventive maintenance schedule is followed and the facility is provided a proper fuel.

BEST AVAILABLE DOCUMENT

SECTION IV

EQUIPMENT CONDITION

An assessment of the Kot Addu plant components and facilities was made during the visit to the plant site. The findings are based on a entire plant walkdown, a thorough review of maintenance and operational history records and conversation with plant staff.

FINDINGS

Gas turbines 5, 6, 7 and 8 are single-shaft, simple cycle, heavy duty combustion turbine units driving a generator manufactured by M/s Alsthom of France under GE License. Fuel and air are used by the gas turbine unit to produce the shaft horsepower necessary to drive certain accessories and ultimately the power generator.

The gas turbine control and protective systems are Speedtronic (Mark IV). Basically an electronic hydraulic control, it is designed to meet the control requirements. The gas turbine control system is designed to crank the turbine, bring it up to purging speed (18%), fire it, and then bring the unit to operating speed on generator drives. The control system automatically synchronizes the turbines in approximately 10 minutes. Conversation with operating personnel, maintenance and Instrument and Control indicate very few problems have been encountered with the control system.

Discussions with representatives from M/s Alsthom and data furnished by them indicates that the present practice of frequent washing of the combustion units is not sufficient to take care of the buildup problem associated with burning furnace oil.

BEST AVAILABLE DOCUMENT

SECTION V

PLANT MAINTENANCE PROGRAMS

The ongoing scheduled, preventive and long term maintenance programs at Kot Addu were reviewed, with the following observations:

Ongoing (Routine) Maintenance

The routine maintenance program is designed to take care of small plant trouble work; general plant projects and housekeeping. A trouble report is originated by the operator when a defect or fault is observed. This report is reviewed by the shift supervisor and forwarded to the appropriate section of the maintenance department for correction. If the work requires an equipment outage, the request is made to clear the equipment. This system appears to be functioning quite well, based on conversations with various shift supervisors. Also, the evidence of only a few non-operational equipment and fluid leaks would bear this out.

Preventive Maintenance

Each maintenance department has a preventive maintenance schedule that outlines work to be done on a daily, weekly, monthly, quarterly and annual basis. These schedules are based on equipment manufacturers recommendations, and are administered by the respective department junior engineers. Although there is no program in place to measure the effectiveness of the program, it appears to work quite well.

The preventive maintenance program for the gas turbines consists of a turbine wash, combustor inspection and a hot gas path inspection. These inspections are scheduled on an equivalent hours basis, and the work is performed when unit outages can be obtained. An equivalent hours scheme is used to shorten the actual times between maintenance in accordance with the type of fuel and the severity of operation. HSD fuel carries a higher penalty than natural gas, and furnace oil carries a higher penalty than HSD. Additionally, hours are added for peak load operation and each start and stop of the machine. The multipliers and adders for equivalent hours calculations are given by the turbine manufacturers.

RECOMMENDATIONS

Long Term Repair Program

Major overhauls for the equipment is now being scheduled by the maintenance management system (MMS), a relatively new department in WAPDA, Lahore. The plant annually submits a request by unit for major overhaul time and duration, and the MMS attempts to schedule each

BEST AVAILABLE DOCUMENT

unit based on a forecasted total country power surplus period. Since this is a new effort, the effectiveness has not yet been proven. All major overhauls are scheduled based on 90 work days, working 12 hrs/day on one shift.

During this evaluation an overhaul was observed for Unit No. 1 and apparently for the first time a critical path methodology were being followed to schedule maintenance items. This is a positive step that Kot Addu power station and WAPDA have taken to reduce outage times.

The plant design is such that equipment maintainability is facilitated. Every major piece of equipment has an installed overhead gantry crane, and the lay down areas are enclosed and very adequate in size. Special tools for major equipment overhauls are available and kept inside adjacent to the respective machines. Small hand tools are kept locked in various storage containers, but the maintenance personnel indicated there were adequate numbers and types to perform their work. The maintenance workshops were well equipped with machine tools.

In summary, the maintenance programs that are in place at Kot Addu are good in concept. All programs are administered manually, as the maintenance management system program has not been developed and installed at the plant. The largest problem seems to be getting the necessary down time to perform outage related work. This is to be expected for a plant operating on a power deficit grid.

BEST AVAILABLE DOCUMENT

SECTION VI

ACTUAL VS. DESIGN PERFORMANCES

As part of the Technical Due Diligence performed on Kot Addu station, observations were made and data gathered to verify that plant system performance is in compliance with design specifications. This evaluation was made difficult because these units were designed to burn HSD and the acceptance criteria were based on this. There is no evidence that performance testing has been accomplished since the units were converted to burn Furnace Oil in 1989. A review of manufacturers acceptance testing of heat rates indicated that the performance of units 5, 6, 7 and 8 was equal to the design basis. Test were conducted using high speed diesel oil.

Observations of units during this evaluation saw maximum load on available units and minimum load and units out of service because system did not require the load. It is not uncommon to run units 5, 6, 7 and 8 at partial load of 25 MW per unit for two or more hours in anticipation of loads. This is not efficient, but the penalties incurred for starts and stops also add to maintenance cost, and this mode of operation can be justified in some cases. Better coordination and understanding between Kot Addu and NCC Islamabad could go a long way towards improving the operation of this facility. A directive issued from General Manager Thermal directed that Senior Engineers from Kot Addu should visit NCC Islamabad. This should help both sides to understand each others problems.

Also reviewed first inspection reports by manufacturers for units 5, 6, 7 and 8. These reports indicated that some units had major damage while others had only normal wear and tear. All units were restored by the manufacturer prior to returning them to service.

There is a discrepancy in station design and maximum output. WAPDA has directed Kot Addu on how to report capacity rating. This approach does not agree with MMS (maintenance management system) report, or the manufacturers design. For example, unit 4 was observed in operation on gas, producing 73 MW at 37°C; however, per manufacturer data the unit should have been producing 85 MW. The MMS report only covers HSD and indicated a capacity rating of 81 MW at 37°C. Discussions with plant management indicated that filters needed cleaning and bleed valves were leaking which would account for the lower output.

The I.T.R. Department (Inspection Testing and Reporting) developed an economic model to evaluate total cost of operation on different fuels. The analysis was comprehensive and covered known major cost aspects. The results were that there was a 0.29 Rs/KWh cost premium when HSD was used versus Furnace Oil. The major cost item missing is the cost to dispose of the waste product produced when processing Furnace Oil. The new disposal system under consideration will require some time to track these costs.

BEST AVAILABLE DOCUMENT

The analysis also indicated that the hot gas path life was reduced to 1/3 and major overhauls were required every two years instead of every six years. An analysis of parts' replacement is still under study to determine what parts would normally be changed if unit was run on gas versus furnace oil.

This model can serve as a basis for future cost analysis of HSD at other units at Kot Addu and I.T.R. indicates they will continue with other units as soon as they can. Their problem is that all data are manual input, and there are limited computer facilities. WAPDA needs to focus on this area as this type of analysis can be used to reduce long run cost and increase efficiency.

BEST AVAILABLE DOCUMENT

SECTION VII

PLANT OPERATING PARAMETERS AND ACTIVITIES

Evaluation of the utilization rates provided by KAPS indicate the station is not being utilized for whatever reasons to the fullest extent they could be. The station personnel are trying to increase these data. Due to the cost of maintenance and fuel at Kot Addu the dispatch center at Islamabad only uses these units when every other station is loaded, and then sometimes only for frequency control.

UTILIZATION RATES % BY GENERATOR							
Generator	Date of Commission	88/89	89/90	90/91	91/92	92/93	Avg.
5	14-11-88	55.46	35.62	43.54	52.63	34.29	44.30
6	29-12-88	58.60	48.53	55.03	52.52	50.63	53.01
7	19-01-89	60.02	47.93	45.17	55.32	29.70	47.60
8	22-04-89	76.85	43.37	44.13	49.57	59.67	54.70

The availability rates since commissioning have generally decreased since conversion to furnace oil since more maintenance has been required.

AVAILABILITY RATES % BY GENERATOR							
Generator	Date of Commission	88/89	89/90	90/91	91/92	92/93	Avg.
5	14-11-88	95.46	65.61	80.33	93.03	68.81	66.90
6	29-12-88	100.00	84.48	79.18	89.82	85.75	87.80
7	19-01-89	100.00	86.48	77.75	94.04	44.82	80.60
8	22-04-89	100.00	86.25	79.40	89.18	91.30	89.20

BEST AVAILABLE DOCUMENT

SECTION VIII

CONDITIONS REQUIRING CORRECTION

During the process of performing the Technical Due Diligence, all aspects of these units were evaluated for conditions needing correction or more attention focused on them in order to enhance the units availability, utilization and performance.

As noted in Section III of this report, the waste product generated by the use of furnace oil is adding cost to the generation. The disposal of this waste presents a potential environmental hazard and WAPDA needs to ensure management attention remains very high in this area.

In addition to the above problem, observations during plant and site walkdown, revealed accumulations of oil in areas that were clean during the previous evaluations in January 1993. Kot Addu experienced a major fire out side the plant area within 100 feet of the storage tanks. This oil was either pumped or drained into this area. During this evaluation it was observed that the contaminated area was being backfilled with dirt and no attempt to remove contaminated soil.

Observation also made of oil being removed from around the tank enclosures by personnel using buckets into a small wheeled tanker. This oil was taken offsite and dumped in a farmers field. Conversations with personnel indicated that this was being taken to Multan for fuel for the brick factories.

Units 5, 6, 7 and 8 were noted to be quite dirty; there is construction for the additional units in the vicinity also. Some extra effort is needed as combustion turbines are quite sensitive to this type of environment. The station has taken some steps to clean up the plant site of left-over construction refuge. They need to continue with this program as first appearances are always impressive.

BEST AVAILABLE DOCUMENT

US AGENCY FOR INTERNATIONAL DEVELOPMENT
PRIVATE SECTOR POWER PROJECT

KOT ADDU POWER STATION
UNITS 1, 2, 3, 4, 9 AND 10

CONTROL WORK PLAN 1.40.1
FINAL REPORT

PERFORMED FOR:
INTERNATIONAL RESOURCES GROUP, LTD.

SUBMITTED BY:

FRED A. STONE
ESI ENERGY/FPL GROUP

AND

DENNIS W. EVANS
JOHN T. BOYD CO.

FEBRUARY, 1993

BEST AVAILABLE DOCUMENT

11

SECTION I

TABLE OF CONTENTS

SECTION	DESCRIPTION	PAGE
I	TABLE OF CONTENTS	i
II	PROJECT AND TASK DESCRIPTION	1
III	CONCLUSIONS AND RECOMMENDATIONS	4
IV	EQUIPMENT CONDITION ASSESSMENT	6
V	PLANT MAINTENANCE PROGRAMS	9
VI	ACTUAL VS DESIGN PERFORMANCE	11
VII	PLANT OPERATING PARAMETERS AND ACTIVITIES	13
VIII	CONDITIONS REQUIRING CORRECTION	17
IX	EXISTING ORGANIZATIONAL STRUCTURE	19
X	STAFF CAPABILITIES	22
XI	EXISTING MANAGEMENT SYSTEMS	25
XII	PROPOSED ORGANIZATION STRUCTURE	27
XIII	PRIVATIZATION RELEVANT ISSUES	32
APP. A	CONTROL WORK PLAN CWP 1.40.1	34
APP. B	TEAM MEMBER EXPERTISE SUMMARY	41
APP. C	COMBINED CYCLE HEAT RATES	42
APP. D	ECONOMIC EVALUATION MODEL	44

BEST AVAILABLE DOCUMENT

SECTION II

PROJECT AND TASK DESCRIPTION

The purpose of this document is to report findings and summaries of the technical evaluations performed at the Kot Addu Power Station. This study was completed under Control Work Plan (CWP) 1.40.1 (Appendix A) to assist WAPDA in the corporatization and privatization process of Kot Addu. The technical due diligence portion of the CWP (Section B) and the organizational structure due diligence portion (Section E) are addressed in this report. The remaining sections of the CWP will be addressed by others.

A short term team comprised of Mr. Fred A. Stone, ESI Energy and Mr. Dennis W. Evans, JTB Co. was formed. The credentials of the team members are included as Appendix B. The team was assisted by M. Maqbool Anjum, Dir. Engineering, WPPO in the collection of data and information. The team completed a one day site visit on Sept. 7, 1992 for a general plant overview and collection of data. A second visit to the plant was made on December 17-23, 1992. The purpose of this visit was to verify detailed nameplate data on equipment and gather additional information related to the project.

After a thorough review of pertinent data, the team made a third plant visit for four days from January 11 to January 14, 1993. During this visit plant equipment and practices were observed in greater detail, and additional information was gathered from extensive interviews with key plant personnel. Equipment walkdowns were conducted during operation, and a crawl-through inspection was made on a Heat Recovery Steam Generator which was under repair. The results of these efforts, combined with the experiences of the team members, make up the content of this report.

The Kot Addu power plant consists of eight gas turbines and two combined cycle steam turbines, with construction underway for two additional steam turbines. Further expansion plans call for an additional two gas turbines and one steam turbine connected in a combined cycle mode. The existing installed capacity is 1024 MW, with an eventual capacity of 1548 MW, all combined cycle units. The schematic major equipment layout is shown on Figure 1, separated by construction phases.

The portion of Kot Addu power station that is currently under consideration for privatization by WAPDA consists of only Phase I and Phase III, with decisions on the remainder of the plant under study. This document will address only GT 1, 2, 3 and 4 and ST 9 and 10, along with associated interconnecting, auxiliary and ancillary equipment.

BEST AVAILABLE DOCUMENT

KOT ADDU POWER STATION
SCHEMATIC EQUIPMENT LAYOUT
1548 MW COMBINED CYCLE POWER PLANT

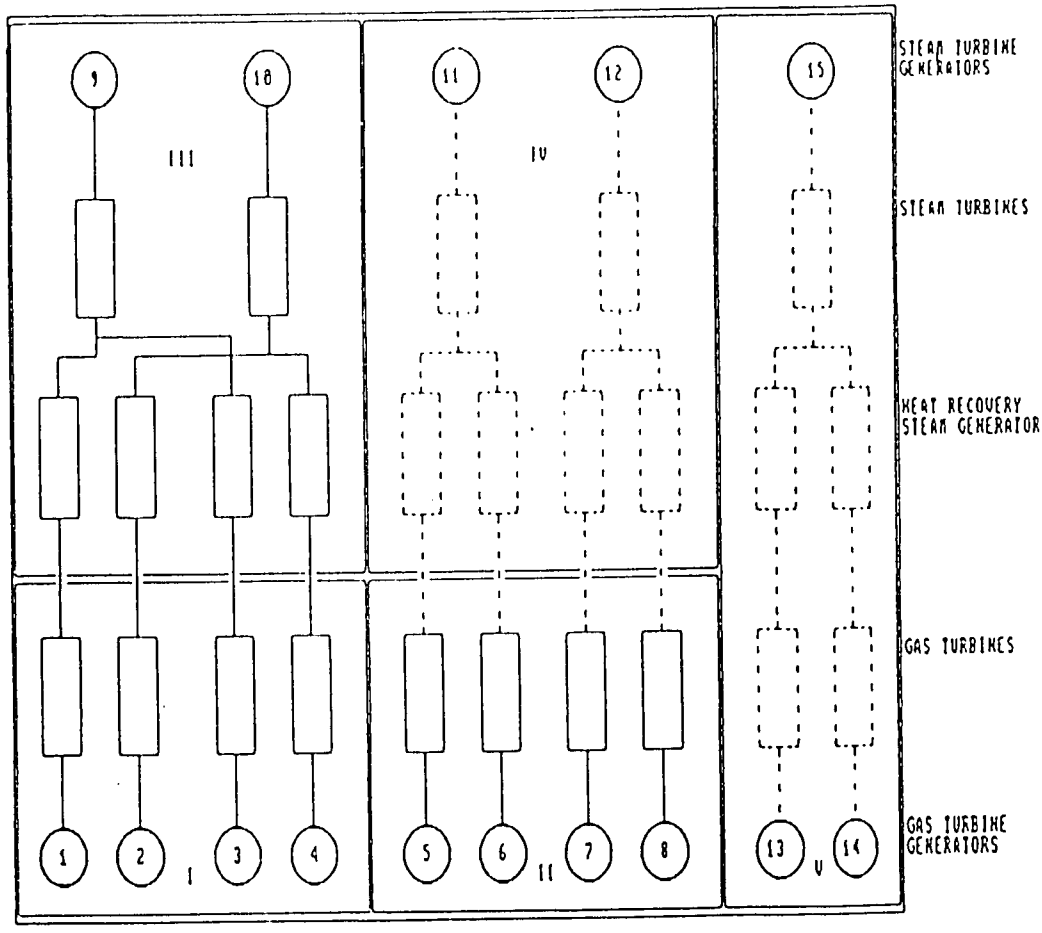

PORTION CONSIDERED FOR PRIVATIZATION UNDER CWP 1.40.1

CONSTRUCTION PHASE	MW	COMPLETION
I	400	1987
II	400	1989
III	224	1991
IV	224	1994
V	300	1995

LEGEND: EXISTING
PLANNED

FIGURE 1

BEST AVAILABLE DOCUMENT

14

A combined cycle power plant is one that utilizes the waste energy in a gas turbine (GT) exhaust gases to generate steam in a heat recovery steam generator (HRSG) to drive a steam turbine (ST). Electric generators are connected to the output shafts of the GT and ST. This arrangement provides for increased overall plant heat rate, afforded by the additional ST generator electric output with no additional fuel burned. The combination of the gas cycle and the steam cycle lend the name combined cycle to the units.

At Kot Addu, GT 1 and 2 are manufactured by KWU, West Germany, and are rated at 125 MW at 15°C. GT 3 and 4 are supplied by Fiat, Italy, and are rated at 96 MW at 15°C. Since GT 1 and 2 have higher load capacity due to greater mass flow rate through the turbine than GT 3 and 4, there is more waste heat and the HRSG's are sized accordingly. All HRSG's are supplied by Balcke-Durr, W. Germany. Units 1 and 2 have over 4000m^2 total heating surface area more than 3 and 4, and are able to produce a greater steam flow rate at the same pressure and temperatures than HRSG 3 and 4.

Because of the differences between steam energy available between HRSG 1 and 2 and HRSG 3 and 4, a decision was made to combine steam from units 1 and 3 to a single steam turbine (ST-9) and to combine steam from HRSG 2 and 4 to another steam turbine (ST-10). This arrangement results in the two steam turbines being of identical design and size, rated at 112 MW each. If the steam turbines were sized separately to accommodate HRSG 1 and 2 as a group and HRSG 3 and 4 as another group, ST-9 would be about 140 MW and ST-10 would be 80 MW. The resulting configuration would have caused problems in operation, maintenance and spare parts associated with non standard designs, as well as an increase in total capital costs.

The technical due diligence performed by the team consists of an evaluation of the units, systems, equipment and components design and performance. Areas of operation and maintenance procedures and practices were explored. Observations, interviews and a thorough review of plant records were performed. Copies of all documents obtained for this evaluation are located in a "Kot Addu Backup" file in the IRG office in Lahore. The contents of this document are a summary of findings, organized by the categories listed in the appropriate sections of the CWP 1.40.1.

BEST AVAILABLE DOCUMENT

SECTION III

CONCLUSIONS AND RECOMMENDATIONS

The Kot Addu Power Station, Phases I and III consists of two combined cycle units; GT1, GT3, ST9 and GT2, GT4, ST10. These units, along with the associated interconnecting and auxiliary equipment, are under consideration for corporatization and privatization by WAPDA Private Power Organization (WPPO), and are the object of this study.

The plant is a good selection for privatization. The gas turbines 1-4 were commissioned in 1987, and the heat recovery steam generators and steam turbines were commissioned in 1991. The entire combined cycle units are two years old, with some components six years old. All major components and systems are very sound, and they incorporate proven design concepts and technology. GT1 and 2 are from KWU, GT3 and 4 are made by Fiat, HRSG 1-4 are provided by Balcke-Durr, ST9 and 10 are from ABB and the coordinating control system is made by Siemens. The erection, commissioning and coordination work of the combined cycle units was performed by the JGC Corporation, a combination of Japanese and German companies. All these manufacturers and suppliers are world-wide leaders in the design, construction and operation of electric power generation systems and equipment.

The single largest area of concern at the plant is the lack of a steady fuel supply of the proper type and required amounts. Presently GT1 and 2 are fired on treated furnace oil and GT 3 and 4 burn diesel fuel. Units 3 and 4 have been converted to natural gas firing capability, and work on units 1 and 2 is underway. Diesel fuel is very expensive to buy, furnace oil is costly to treat, and natural gas is not available at the site. Accordingly, the units are operated based on the availability of cheap fuel, and are frequently idle due to lack of fuel. As a result, the full potential of the combined cycle units is seldom realized.

The team recommends an economic evaluation be performed to determine the right type of fuel to be used, and actions be taken to secure an adequate supply of that fuel. This study should include cost of raw fuel, operational costs of fuel treatment, and additional maintenance costs associated with the type of fuel. Also to be considered is the costs of lost revenue due to unit derating and frequent outages to perform fuel-related maintenance. A model of the evaluation format is included as Appendix D.

A few equipment problems remain to be resolved prior to corporatization. Among these are the HRSG 1 and 2 LP section tube leaks, GT 3 and 4 starting motor failures and the hydraulic operators on the boiler inlet dampers. All these problems have been identified, and solutions are being implemented with the assistance of the manufacturers. Since the units have operated a few years, most of the significant problems have been identified and corrected. All remaining issues are now considered on-going maintenance activities.

BEST AVAILABLE DOCUMENT

The only other recommendation from the team would be to renumber the equipment to CC-1 and CC-2. This would put the emphasis on the features of a combined cycle unit, rather than a plant with six separate units. The mindset would then be focused on overall combined cycle operation and improvement. The benefits of low heat rates and high unit availability would become obvious, and the total worth of the plant would be significantly increased.

BEST AVAILABLE DOCUMENT

11

SECTION IV

EQUIPMENT CONDITION ASSESSMENT

An assessment of the Kot Addu plant equipment components and facilities was made by the team during their plant visits. The following observations and comments are based on an entire plant walkdown, a thorough review of maintenance and operational history records and numerous conversations with plant staff.

Gas turbines 1 and 2 are a single shaft design with two external combustors and a four stage turbine. They are KWU model V-94.2. The starting design uses the generator as a synchronous motor, and reaches ignition speed in 4 minutes. The turbine inlet temperature is 1050°C (1922°F) and the mass flow rate through the turbine is 426 Kg/sec. The units are designed to burn HSD, but they are operated mainly on blended furnace oil. Conversion to natural gas firing capability is underway. Control system is digital with hydraulic actuators, and has proven very reliable.

Gas turbines 3 and 4 are also a single shaft design with eighteen internal combustors arranged in an annular formation with crossover tubes between each combustor can. These units are Fiat model TG-50, licensed from Westinghouse Corp. The starting design uses a 2570 hp motor and reaches ignition speed in 25 minutes. The turbine inlet temperature is 1050°C (1922°F) and the mass gas flow rate through the turbine is 322 kg/sec. The hot section components are cooled by compressor discharge bleed air that has been cooled by an external heat exchanger. Units have not been converted to burn furnace oil, and they are dispatched on HSD. Conversions to burn natural gas have been completed, but gas is not yet available. The control system utilizes mechanical contact relays and pneumatic actuators for the valves. This system is an older design and has caused reliability problems. The equipment presents a high maintenance problem, and thoughts should be made to upgrade to DEH (digital-electro-hydraulic) system in the future.

The HRSG units are furnished by Balcke-Durr and 1-4 are of the same basic design. Units 1 and 2 have a larger total heating surface area and is designed for a steam output of 208 T/hr at 48 bar and 505°C, while units 3 and 4 are rated at 181 T/hr at the same steam conditions. The different sizes reflect the larger mass gas flow rates for the KWU turbines when compared to the Fiats. All four HRSG's have the same external envelope.

All the HRSG's have four main heat recovery sections, consisting of LP feedwater economizer, HP preheater, HP evaporator and HP superheater. The LP circuit includes the deareator and the HP circuit features a steam drum with separators. The LP circuit is fed by the condensate pumps that take suction from the hotwell. A pair of LP recirculation pumps insure positive circulation through the LP section. Three 50% feed pumps provide pressure for the HP circuit, which includes a pair of HP recirculation pumps for positive circulation through the HP sections.

BEST AVAILABLE DOCUMENT

All level and flow controls are electronic type, made by Siemens, and make up a low-maintenance, high-reliability system

The steam turbines are two identical ABB units rated at 112 MW @ 30°C. They are a once through design with no reheat section, and exhaust into a surface condenser. Rated inlet conditions are 108 Kg/sec live steam, and the design backpressure is 0.091 Bar abs. Each turbine has 30 total stages, and is controlled by an ABB automatic control system. This system features speed control during roll up, automatic synchronizing, and load control while on the line. Factors of thermal stress, acceleration and load rate limits are calculated and controlled.

The two main surface condensers are identical in design and were built in West Germany. There are a total of 13,000 Cu Zn 28 Sn (Admiralty Brass) tubes in each. The tubes are 27 ft. long, 0.945 inches inside diameter and have a wall thickness of .040 to .060 inches. The design water velocity in the tubes is 6.26 ft./sec. Inspection reports from first annual outage show there is no scaling, erosion or corrosion on the tube heat transfer surfaces. Continued emphasis on water chemistry and control in the steam cycle and the cooling towers should be made.

The condenser cooling is provided by two circulating water pumps, drawing suction from the cooling tower basin. The cooling towers consist of two 3-cell units for each condenser. Four of the six cells are required at full load at 50°C ambient conditions to produce design condenser backpressure. The extra capacity of the cooling towers is reserve for future requirements when the units may run on natural gas. At this time the gas turbine deratings would be lifted, allowing the HRSG's to produce more steam and increasing the load on the steam turbines.

The raw water supply for the plant comes from two sources; a spur agricultural irrigation canal and 75 feet deep tubewells. The canal water supply is available only seven months out of a year and is very muddy. Two labor intensive coagulators are used to clarify the water. Tubewell total dissolved solids are more than twice as high as the canal water. Both water sources are run through a series of sand filters prior to introduction to the demineralizer or cooling tower basins. Chemicals are added to control pH and algae growth in the tower basins.

The six electrical generators are all 3000 rpm, 50 Hz. and generate at 11 kV with a power factor of 0.85. The generators are water cooled, and each unit has its own closed circuit water system with separate water-to-air heat exchangers. These systems have proven adequate in design to be a relatively trouble-free systems, and they all incorporate reserve capacity for possible future upgrades. All generators have static excitation equipment, and have caused no problems for operations or maintenance.

The fuel oil tank farm consists of 10 storage tanks of 8000 m^3 (2,113,600 gal) capacity each. Currently there are three tanks allocated to HSD, six tanks for furnace oil and one tank is dedicated to oily waste water storage. There are 8 truck unloading stations and a ten-inch pipeline coming from nearby Mamoot Kot terminal. Piping and valving arrangements are provided such that any fuel can be transferred into or out of any tank at any time. The

BEST AVAILABLE DOCUMENT

19

flexibility is desirable should the future fuel mix change significantly. Two steam boilers have been installed to facilitate pumping of furnace oil.

The furnace oil burned in GT 1 and 2 is treated prior to combustion in a fuel oil treatment plant provided by Petrolite. The reason for this process is to remove water soluble sodium and potassium present in the fuel, which can drastically shorten the life of GT hot section components. The fuel oil treatment process consists of adding an emulsifier and mixing the oil with condensate. The mixture is then heated and passed through three series stages of electrostatic precipitators where the sodium and potassium ions coalesce and settle to the bottom of the tank as sludge. The treated oil then proceeds to an oily-water separator and back to the storage tank for burning. A vanadium inhibitor is added to the fuel stream at the forwarding station prior to burning. There is a problem with complete separation of the oil and water after the treatment process. This oily water waste is put into a storage tank awaiting a technique for adequate separation. Several processes are under study, but a proven method is not currently available.

The general plant facilities consists of a central administration building, control room building, three turbine machine halls, two workshops, four storerooms, a chemical storeroom, a chemical water treatment building, a car building and a fire fighting equipment building. All these buildings have been erected for six years, and are in need of external maintenance. Also, the internals of the buildings are in need of a general organization, cleaning and painting. Some of the restrooms have broken fixtures and have been abandoned. The open spaces between the buildings and operating equipment is cluttered with material, parts, trash chemical drums and locked shipping containers. There areas are generally in a deplorable state, considering the units have been in service for at least two years. A general housekeeping campaign consisting of material organization, trash removal and building maintenance would result in an improvement of plant salability.

BEST AVAILABLE DOCUMENT

20

SECTION V

PLANT MAINTENANCE PROGRAMS

The ongoing scheduled, preventive and long term maintenance programs at Kot Addu were reviewed, with the following observations:

Ongoing (Routine) Maintenance

The routine maintenance program is designed to take care of small plant trouble work and general plant projects and housekeeping. A trouble report is originated by the operators when a defect or fault is observed. This report is reviewed by the shift supervisor and forwarded to the appropriate section of the maintenance department for correction. If the work requires an equipment outage, the request is made to clear the equipment. This system appears to be functioning quite well, based on conversations with various shift supervisors. Also, the evidence of only a few non-operational equipment and fluid leaks would bear this out.

Preventive Maintenance

Each maintenance department has a preventive maintenance schedule that outlines work to be done on a daily, weekly, monthly, quarterly and annual basis. These schedules are based on equipment manufacturers recommendations, and are administered by the respective department junior engineers. Although there is no program in place to measure the effectiveness of the program, it appears to work quite well.

The preventive maintenance program for the gas turbines consists of a turbine wash, combustor inspection and a hot gas path inspection. These inspections are scheduled on an equivalent hours basis, and the work is performed when unit outages can be obtained. An equivalent hours scheme is used to shorten the actual times between maintenance in accordance with the type of fuel and the severity of operation. HSD fuel carries a higher penalty than natural gas, and furnace oil carries a higher penalty than HSD. Also, hours are added for peak load operation and each start and stop of the machine. The multipliers and adders for equivalent hours calculations are given by the turbine manufacturers.

Long Term Repair Program

Major overhauls for the equipment is now being scheduled by the maintenance management system (MMS), a relatively new department in WAPDA, Lahore. The plant annually submits a request by unit for major overhaul time and duration, and the MMS attempts to schedule each unit based on a forecasted total country power surplus period. Since this is a new effort, the effectiveness has not yet been proven.

BEST AVAILABLE DOCUMENT

All major overhauls are scheduled based on 90 work days, working 12 hrs/day on one shift. No program is in place to attempt to reduce the outage duration, nor is there any attempt to schedule major parts of the combined cycle unit during the same time. This poor practice is a result of the fact the units are not recognized as combined cycle unit. Also, there is no focus or incentive to calculate and improve unit availability parameters.

The plant design is such that equipment maintainability is facilitated. Every major piece of equipment has an installed overhead gantry crane, and the laydown areas are enclosed and very adequate in size. The HRSG's all have power hoists with jib booms installed at the upper levels. Special tools for major equipment overhauls are available and kept inside adjacent to the respective machines. Small hand tools are kept locked in various storage containers, but the maintenance personnel indicated there were adequate numbers and types to perform their work. The maintenance workshops were well equipped with machine tools, but were very cluttered and mostly not used.

In summary, the maintenance programs that are in place at Kot Addu are good in concept. All programs are administered manually, as the maintenance management system program has not been developed and installed at the plant. The largest problem seems to be getting the necessary down time to perform outage related work. This is to be expected for a plant operating on a power deficit grid, but no incentives are there to coordinate or shorten duration of work efforts.

BEST AVAILABLE DOCUMENT

SECTION VI

ACTUAL VS DESIGN PERFORMANCE

As part of the technical due diligence performed on the Kot Addu units, observations were made and data was gathered to verify plant system performance is in compliance with design specifications. While the team was at the plant, HRSG 2 was out of service to repair tube leaks, but all four GT's, the remaining three HRSG's and both ST were operating. GT 1 and 2 were burning furnace oil and GT 3 and 4 were running on HSD. Conversations with the control room personnel and a review of previous data verified the total megawatts produced by each generator was in line with the operating configurations and ambient temperature (6°C) of the day. There were no charts or tables that let the operator know the expected output. The units were being operated because the system needed power, as periodic loadshedding was underway all over the country.

The attempt to verify that performance was in compliance with design specifications presented a double dilemma. First, it was difficult to ascertain actual performance due to the lack of accurate instrumentation and data logging, and secondly design specifications were not available for the systems. The plant was bought, erected and commissioned based on a guaranteed GT base load rating on HSD with a design heat rate for the gas turbines. The steam turbines were put in service with a guaranteed net output, corrected for ISO conditions. All other equipment and system design data was not available at the plant or in WAPDA, Lahore. Also unavailable was any data relating to the design parameters of the combined cycle units, or GT 1 and 2 operating on furnace oil.

A copy of the unit acceptance tests were located in the plant technical library for each of the gas turbines and the steam bottoming cycle addition. These tests were performed according to contract prior to commissioning by the respective equipment supplier. The results of these tests show all four gas turbines met or exceeded their guarantees of power output and heat rate, on a corrected basis. All these tests were run on HSD fuel. No testing was completed after conversion to furnace oil on GT 1 and 2, and no testing has been performed on any of the equipment since commissioning.

Similarly, the steam turbines underwent an acceptance test prior to their commissioning dates. The record of these tests also indicate the actual corrected parameters of generator net output and HRSG exhaust gas pressure loss met or exceeded the contractual guarantee. No testing has been conducted on any of the equipment since commissioning. Also, no testing has ever been performed to determine total combined cycle unit performance.

BEST AVAILABLE DOCUMENT

A review of the data provided by the plant on form E was made for the years 88/89, 89/90, 90/91 and 91/92 as well as monthly data for each month in calendar year 1992. On these forms, in section 48, the heat rate of each unit is reported, as well as the design heat rate for each unit. The actual heat rate numbers listed were meaningless, as they were average calculations for the month based on the amount of fuel burned and the total gross generation for the unit. No clue as to how the units were run, and the ambient temperatures during operation was unavailble. It appears this information is prepared and transmitted each month merely to meet a reporting requirement rather than to initiate actions based on analysis.

The plant auxiliary systems were all walked down with observations made during equipment operation. Many conversations were held with the operators in an effort to ascertain individual equipment operating satisfaction. No significant problems were discovered relating to various system performance. The practice of marking gauges for normal operating ranges, or "redlining" for maximum values, was not observed.

In recommendation, the team suggests a thorough battery of tests be performed prior to corporatization on all major pieces of equipment. The results of these tests would be used as a baseline to operate the equipment by, as well as a determination of the degree of performance degradation over time. Subsequent periodic testing should be performed. Variations due to fuel burned and ambient temperature fluctuations should be considered, and a family of curves would be generated. These curves would be used to compare actual operating parameters with expected as a valuable tool to detect performance degradation early.

BEST AVAILABLE DOCUMENT

SECTION VII

PLANT OPERATING PARAMETERS AND ACTIVITIES

The team made on extensive review of plant operating parameters, including availability, heat rates, fuel consumption, water chemistry and control and instrument activities. . The results of the evaluation of these parameters are the topic of this section. Also included are some recommendations from the team to help improve the success of the corporatization and privatization of Kot Addu power plant.

The utilization of the units at the plant for electrical generation is rather low, with the gas turbines averaging 32.4% over a four year period from July 1988 to June 1992. The steam turbines have a somewhat higher utilization rate of 48.8% in the year and few months since commissioning. The table below summarizes the plants utilization rates by generator.

UTILIZATION RATES (%) BY GENERATOR

GENERATOR	DATE OF COMMISSION	88/89	89/90	90/91	91/92	TOTALS	AVERAGE
1	1-18-87	25.8	23.2	32.0	55.3	34.1	GT 1-4
2	1-14-87	28.4	31.7	30.3	59.5	37.5	
3	3-12-87	39.5	11.6	24.6	35.8	27.8	32.4
4	5-2-87	33.2	28.2	27.3	31.6	30.0	
9	1-28-91	0	0	47.2*	44.1	45.1	ST 9 & 10
10	3-8-91	0	0	61.7*	47.0	53.2	48.8

*Partial Year Data

The above table shows the combined average steam turbine generators have a higher rate of utilization than the corresponding gas turbine generators. This would suggest that running the combined cycle units with only one gas turbine and HRSG in service is a common practice. Conversations with plant personnel verified the policy of running the units was based on fuel availability and fuel costs, rather than on combined cycle heat rates and total plant output. Other reasons for low utilization rates include gas turbine requirements to perform maintenance related to burning furnace oil as fuel. Also this station is designated at a peaking unit when water is available for the hydro units.

BEST AVAILABLE DOCUMENT

25

It can also be seen that in 91/92 GT's 1 & 2 are in the high 50's, while GT's 3 & 4 are in the low to mid 30's. This signigicant difference can be attributed to the practice of not burning HSD because of its' higher cost. A proper economic study (see App. D) will probably reveal this operating philosophy is very shallow, as it cost more money not to burn HSD than to burn it.

Calculations were made to determine average heat rates for the units (see Appendix C). All four gas turbines are operating well below their design potentials, which were proven during acceptance testing. The main reasons for the excessively high average heat rates are the large number of start up and shut downs per year, the practice of operating at inefficient part loads, and the derating of gas turbines 1 and 2 in order to burn furnace oil. Also, the data for average heat rates shown is somewhat better than actual, as gross output numbers are used with no attempt to account for station auxiliaries in the calculations.

Calculations for the entire combined cycle unit heat rate were not made by anyone at the plant site or in the WAPDA house, Lahore. This suggests the most important feature of a combined cycle unit (low overall heat rates) is not considered a valuable aspect of the plant. As a result, the units are grossly misoperated on a continuing basis. Some values for steam turbine heat rates are calculated and reported on form "E", but they are virtually meaningless as no one was able to explain to team members the formulas or basis for calculation.

The plant specific fuel consumption is abnormally high due to the high heat rates resulting from the mode of operation of the units. Some of the year fuel is unavailable in the plant tanks, and what is available (HSD) is considered too expensive to burn on an extended basis. Also, fuel consumed in the operation of the boilers used for heating and processing furnace oil is not accounted for. Most of the fuel used in these package boilers is the expensive HSD due to problems encountered when attempting to burn furnace oil in them.

The plant availability rates are listed below.

The data indicates these rates have increased since units were commissioned, which indicates the station preventive maintenance programs is working.

AVAILABILITY RATES (%) BY GENERATOR

GENERATOR	DATE OF COMMISSION	88/89	89/90	90/91	91/92	TOTALS	AVERAGE
1	1-18-87	56.04	52.63	99.33	88.84	296.84	74.21
2	1-14-87	59.76	87.58	88.52	79.58	315.44	78.86
3	3-12-87	70.11	37.44	61.27	78.2	247.02	61.76
4	5-2-87	66.67	94.43	78.16	91.58	330.84	82.71
9	1-28-91	0	0	0	91.8	91.58	91.58
10	3-8-91	0	0	0	73.87	73.87	73.87

BEST AVAILABLE DOCUMENT

26

The plant water chemistry and control program for the HRSG's and steam turbines is well organized and is in accordance with the equipment manufacturer's specifications. Water samples from the hotwell, deaerater, LP drum, HP drum and superheated steam are collected from all four HRSG's every four hours. These samples are then analyzed by well-trained water technicians in a laboratory equipped with modern electronic equipment. The dosage rates of various water chemistry control additives such as phosphates, ammonia and hydrazine are adjusted as required in order to maintain water chemistry parameters within limits. If there is an area out of limits, the frequency of sampling will be increased to once every hour until everything has returned to normal.

The one area of water chemistry control that is difficult to manage is the short-term excursions of phosphate and dissolved oxygen during quick starts of the HRSG's. This condition is most prevalent in the low pressure circuit, and can lead to large amount of caustic accumulations resulting in stress corrosion cracking of the tube welds and base material. The tube failures in HRSG 1 and 2 are attributed to this mechanism, combined with a total of 290 starts in the first year of operation. The maximum limits of phosphate have been lowered and the water circulation rate through the LP section has been increased. These measures have been taken upon the advice of Balcke-Durr, the HRSG manufacturer. To date there is no program to reduce the number of starts on the part of the plant, or to increase the duration of each start by modulating the boiler inlet dampers. The team would recommend activities in this area to be initiated by plant operations personnel.

The plant chemistry department also monitors and controls the raw water supply and the cooling tower basin and makeup water. The raw water supply comes either from a nearby irrigation canal or from tubewells, depending on the time of year. The variability of supply source requires flexibility in the operation of the clarifiers, sand filters, demineralizer trains and cooling tower basin blowdowns. This function is performed adequately by the plant chemists, who use the same monitoring and control techniques employed in the boiler water chemistry area.

The plant instrumentation located at each piece of equipment appears to be adequate for local operation and monitoring by the operators. The instrumentation in the control room is lacking in the area of overall combined cycle parameters. The team would recommend additional instrumentation be provided that would show each combined cycle unit's output, auxiliary usage and net generation to the grid. Also, instrumentation that would display calculated parameters of unit net heat rates and major equipment efficiencies should be provided in the control room. This would help the operators in understanding more about the overall plant they are running.

In the experienced opinion of the team, they would recommend a number of changes relating to plant operations. The plant factors of heat rate and availability are very important at any plant. In a combined cycle plant, with its inherent design efficiencies, availability becomes even more important when considered on an economic basis. Accordingly, the recommendations are:

BEST AVAILABLE DOCUMENT

- Change the existing plant equipment nomenclature from GT 1-4 and ST 9 and 10 to CC-1 and CC-2. The gas turbines and steam turbines should not be considered as generating units themselves, but as major pieces of equipment in a combined cycle generating unit.

- Establish a periodic performance testing and improvement program for overall combined cycle units. This would include a family of curves for different fuels and variable ambient temperatures. This program would provide a target for operators, as well as serve as an input to the maintenance department for prioritization of work.

- Initiate a combined cycle based availability measurement and improvement program. This must include an accurate data collection system, categorized into forced, maintenance and planned outages; both full and partial. When the current situation is better understood, methods for improvement would be more obvious.

- Incorporate a system of trend charting key plant output parameters, and make them visible for all plant employees as well as WAPDA house. This system would let everyone at the plant know "how are we doing" and would serve as a basis for continued incremental improvement with the participation of many people.

Adoption of these recommendations, whole or in part, would enhance the success of corporatization and privatization efforts. In the interim it would significantly improve the ability of WAPDA to provide power to the people of Pakistan.

BEST AVAILABLE DOCUMENT

SECTION VIII

CONDITIONS REQUIRING CORRECTION

During the process of performing the technical due diligence, the team has identified several conditions that would require correction prior to corporatization. Most of these problem areas are presently under correction by the plant forces, but verification should be made on all cases. The areas are listed below.

1) HRSG 1 and 2 have experienced tube leaks in the LP evaporator section, with secondary damage to the tubes in the HP evaporator section just below. Analysis of the failed tubes shows the initial leaks were caused by stress corrosion cracking due to caustic accumulation. The root cause has been identified to be multiple in nature. High phosphate limits in water chemistry, low water circulation rate and many fast startups on the HRSG were listed as most probable causes. Corrective action taken include revised lower phosphate limits, increased water circulation rate and replacement of ruptured tube sections. The plant should perform tube thickness tests on other possible tubes, and replace all sections shown to be under minimum wall thickness. Plant operation procedures should be revised to change the rate of startups, and an effort to reduce the total number of starts between major inspections should be made. Also, an inspection of HRSG 3 and 4 needs to be made to insure the same failure mechanism is not in place over there.

2) The starting motors on GT 3 and 4 have failed a number of times in service, causing an availability problem. Repairs have been made, and a spare motor was purchased. The main reason for failure is an inappropriate application of the motors. The motors are continuous duty rated, but are in service under heavy duty intermittent service conditions. Due to the application, the motors experience starting current conditions (3-5 times running current) for continuous periods of up to 20 minutes. Properly designed motors need to be furnished for GT 3 and 4 prior to corporatization.

3) The boiler inlet dampers in the duct between GT exhaust and HRSG superheater section are plagued with hydraulic failures on all four units. Sticking solenoid valves are being replaced with a newer design as failures are experienced. Also, the hydraulic actuator rams undergo bleedoff, allowing damper position to drift in service. Both these conditions result in gas turbine trips under load, contributing to unavailability. A wholesale changeout of all defective components should be completed prior to corporatization.

BEST AVAILABLE DOCUMENT

4) The first stage turbine blades on GT-1 and the third stage turbine blades on GT-4 experienced cracking and separation failures during operation. The incident reports and failure analysis are very sketchy on both these occurrences, but the main cause is reported to be hot sulfidization caused by sodium sulfate accumulation on the blade base metals. Inadequate fuel washing and voids in the blade protective coatings were attributed to the failures. Also, the possibility of airborne salts penetrating the inlet air filtration system, and no means provided for compressor washing was cited as a possible failure cause. A better understanding of the failure mechanism and the effectiveness of corrective actions taken need to be verified prior to corporation. A metallurgical analysis of blade materials should be made to determine remaining useful life.

5) The gas turbine control systems on GT 3 and 4 are comprised of mechanical finger type contact relays and pneumatic actuators on all related system valves. The outdated (30+ years old) technology of this critical system causes high unavailability rates and excessive manhours for troubleshooting problems. This system should be upgraded to a DEH system, or result in a corresponding reduction in purchase price upon privatization.

Estimated costs in 1992 US dollars for each of the above problem areas is included in the table below. These items, if not completed, should result in a reduction of the purchase price of the facility, or indemnification by WAPDA.

ITEM	DESCRIPTION OF ACTION	AMOUNT
1	Perform tube thickness tests and replace below minimum tubes on all 4 HRSG's	$160,000
2	Procure and install starting motors for GT3 and GT4	$140,000
3	Replace defective components on boiler inlet damper actuators	$ 32,000
4	Install compressor washing systems and continuous performance monitors on all four GT's	$360,000
5	Update GT3 and GT4 control systems to DEH system	$240,000
ALL	TOTAL ALL ITEMS	$932,000

BEST AVAILABLE DOCUMENT

SECTION IX

EXISTING ORGANIZATIONAL STRUCTURE

The existing organization chart for Kot Addu Gas turbine power station is a proposed chart for the entire plant, and includes sanctioned posting levels for GT 1-6, ST 9 and 10 as well as Project Director staffing for units 11 through 15. Also included are positions allocated for maintenance and proper functioning of the colony and its facilities. There is no chart in existence to show the structure in place to administer to the needs of only GT 1-4 and ST 9 and 10 including all activities ancillary to electricity generation proper.

Using the total plant organization chart as a guide, the team consulted with the Chief Engineer and ranking members of the operations and maintenance staff. From these sessions, an agreement was reached as to the total numbers of people sanctioned to support only GT 1-4 and ST 9 and 10. Ratios were used to allocate the staffing in the common areas. The resulting organization chart is shown as Figure 2 in a simplified form with allocated complements in each functional area. Total existing complement allocated to the combined cycle units GT 1-4 and ST 9 and 10 is 717 people.

The operations department is under the direction of the Resident Engineer, Operations (RE-O). This structure attends to the functional areas of plant operations, plant chemistry, fuel handling and treatment, unitwise plant statistics recording and reporting, plant security and plant fire protection. The plant operations sub-group operates and monitors all plant systems and equipment, and secures certain components for maintenance work. Their function also includes preparation of extensive data logs for compilation by the Inspection, Testing and Reporting (ITR) section. The plant chemistry section function is to perform testing and monitoring of the fuel oil constituents as it is processed through the Petrolite fuel oil treatment plant. This department is also responsible for all plant water, including cooling tower basin, HRSG condensate and feedwater, plant demineralizer operation, plant service water and plant potable water systems. The chemistry section is also equipped to perform various analysis on HSD fuel oil, Furnace Oil and plant equipment lubricating oils.

The fuels section of the operations department has responsibility to receive and account for all fuel oil in the tanks, including HSD and treated and untreated furnace oil. Their functions include operation of the auxiliary boilers to heat furnace oil for pumping purposes when forwarding oil to and from the treatment plant and to the gas turbines. A portion of their records are forwarded to the ITR for compilation purposes. The ITR section serves as the plant operations statistical data depository, and prepares periodic reports for unitwise and plant wise information on amounts of fuel burned, electricity generated, chemicals used, etc. These reports are forwarded to the Chief Engineer and GM. Thermal at WAPDA house in Lahore for review, analysis and filing.

BEST AVAILABLE DOCUMENT

KOT ADDU UNIT GT 1-4, ST 9 & 10
EXISTING ORGANIZATION CHART

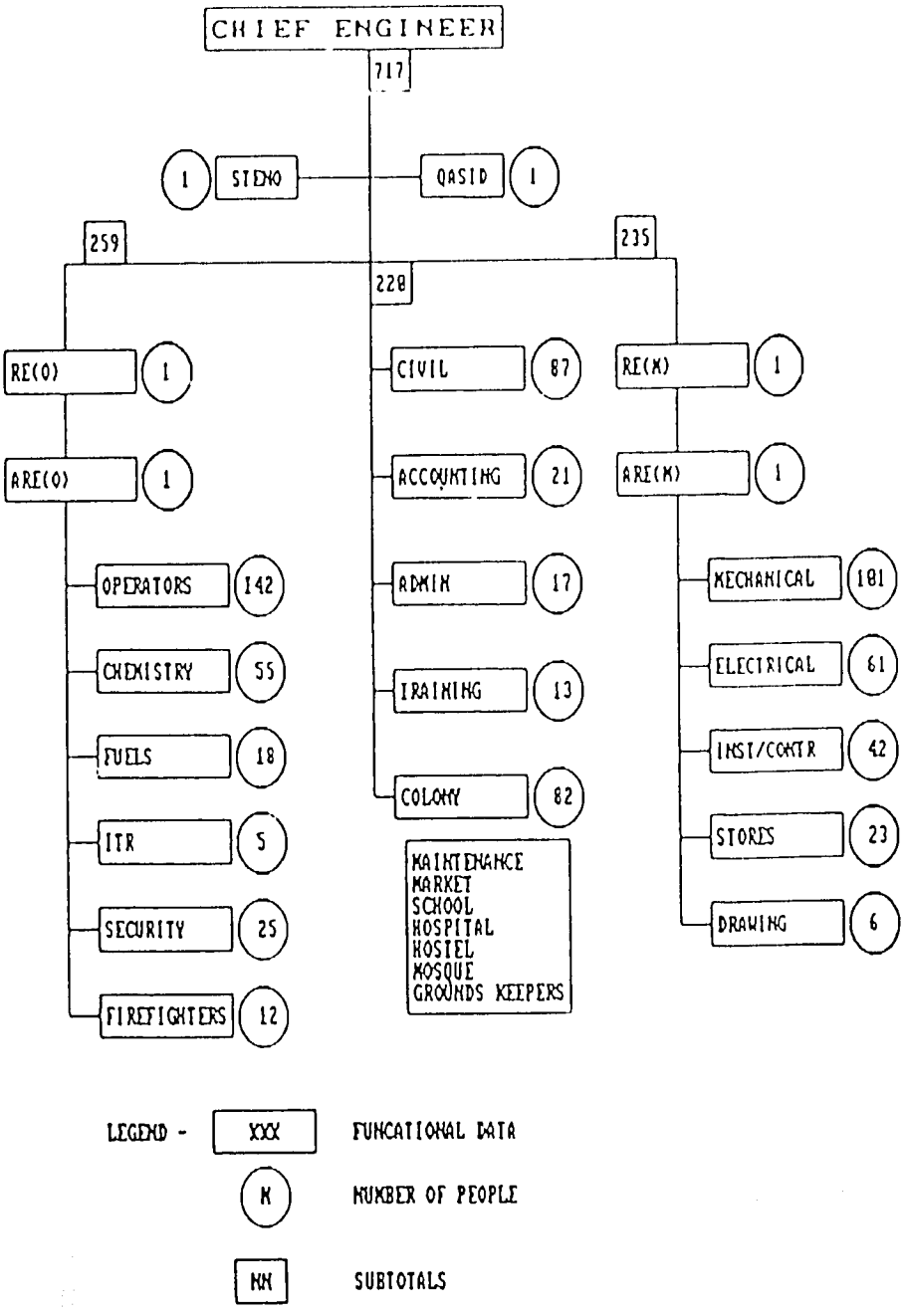

FIGURE 2

BEST AVAILABLE DOCUMENT

32

The security and firefighting sections are part of the operations department, and they provide gate control and fire protection services for the site. Included in their scope are all plant generating equipment, buildings, fuel oil storage and handling facilities, stores warehouses and outlying areas.

The plant maintenance department is under the direction of the Resident Engineer, Maintenance (RE-M). This department's function is to plan, schedule and execute maintenance on all plant equipment, systems, components and facilities. The maintenance efforts are divided by discipline into mechanical, electrical and instrument and control functions. Troubleshooting and repair methods are an integral part of this group's functions. Included in the maintenance department is the plant stores section. The function of this group is to catalog, inventory, procure and issue spare parts, materials and chemicals for use by the plant maintenance forces. The drawing section is also in the maintenance department. Its purpose is to provide updated drawings and prints for use in the plant, as well as the keeping of plant technical documents.

The departments of civil, accounting, administrative, training and colony are all direct reports to the Chief Engineer. The functions of these various groups are common to entire plant, and follow the description in the respective section title.

BEST AVAILABLE DOCUMENT

BEST AVAILABLE DOCUMENT

SECTION X

STAFF CAPABILITIES

The staffing levels and staff capabilities within each organizational structure has been reviewed and evaluated for the purpose of determining their adequacy in performing the required functions. Only the functions related to electricity production proper were considered in this study. Other ancillary functions such as administrative, accounting, colony operations etc. were not evaluated. In general, the amount and level of training appears to be adequate, but the allocation and application could be improved upon.

The Chief Engineer of the plant has a four year degree in engineering and has served in a number of engineering positions at three separate WAPDA power stations. His theoretical training combined with his actual plant experience appear to result in adequate capability for the existing responsibilities under WAPDA. Management and leadership skills were not evident, but not required as the directions for the plant come from WAPDA.

The Operations staff is headed up by a degreed engineer. He has a total of 22 degreed engineers functioning as sub department heads and supervisors for the various shifts. Many of these employees have undergone general plant operations training, as well as equipment specific training. The level of training afforded the operators is very little other than on the job training, which is largely task oriented with no theoretical aspects involved. There is no cross-training provided between operators of different equipment. These workers actually run the plant equipment and are shown how to do so by others, but they cannot function in a supervisory position without a degree from the University. Accordingly, they have no career path above the level of control room operator.

The Maintenance department is structured the same way, with four levels of degreed engineers between the Chief Engineer and the workers. There are a total of 17 engineering people in the mechanical, electrical, instrument and controls groups; all at the supervisory level. This group of employees has been afforded a one-year WAPDA training program and select engineers have been training at OEM facilities in Germany, Italy, France and Japan. The workers have acquired some basic vocational skills beyond secondary school, and are receiving some on the job training to perform their functions. Again, due to the lack of formal university training, their career path is limited to foreman level or below.

The Chemistry section appears to have the highest level of training per employee. Each person in this department above the level of coolie has at least two years training in Chemistry and many have a four year university degree. All members of the group are afforded WAPDA - sponsored training in power plants general, and many have specific training by OEM Petrolite in the fuel oil treatment plant.

In all departments, the sanctioned levels appear to be very high. The authorized complement on the existing organization is three to five times higher than similar plants with the same equipment in other parts of the world. Some of the extraordinarily high staffing levels can be attributed to the local culture, but much of it is caused by gross inefficiency in basic operating and maintenance practices. The proposed structure in SECTION XII more adequately describes the required levels of staffing.

In general, the levels of training and experience in the supervisory ranks is quite good, and the levels of training in the worker ranks is quite poor. Although the plant has an 18 member training department on the organization chart, this group does not exist. The sanctioned numbers have been allocated elsewhere throughout the plant. All training, even in the supervisory ranks is highly task oriented, with little or no evidence of any management direction or supervisory emphasis. The principles and concepts of management skills are taught through a WAPDA course, but the plant supervisors are either not encouraged or not allowed to apply these skills. Specific management focus on availability improvement, equipment performance betterment, employee involvement, interpersonal skills training, career paths and employee safety training would forge the individual skills into a very capable team. I don't think this is the WAPDA way.

The fact that the supervisory staff is trained on the details of the equipment operation, maintenance and analysis, while the workers are trained to perform only certain tasks results in a much higher level of staffing than is necessary. It seems the bureaucracy of a government organization has been inherited by the plant employees, at all levels. The overall focus needs to shift from the plant's function of producing megawatts to the plant's function to make money.

BEST AVAILABLE DOCUMENT

SECTION XI

EXISTING MANAGEMENT SYSTEMS

The existing management systems at the Kot Addu power station were reviewed and evaluated for effectiveness toward successful corporatization and privatization activities. Most systems observed were manual, as computers are not widely used as an integral part of plant operations and maintenance activities. Data processing systems related to the accounting functions, including budget preparation and monitoring were not included in this study. In general, all other existing systems were quite manpower intensive, cumbersome, and ineffective in some cases.

In the areas of plant operations, the units are operated without the benefit of written procedures or check lists. Extensive documentation has been provided by the equipment OEM, but has not been reduced in the form of usable procedures and checklists. Although the operators were all well versed in how to operate their assigned equipment, most did not appear to have a good grasp on the overall impact of their functions on the total plant. The system of requesting maintenance work or repairs is through a manually generated Trouble Report. This request is forwarded to the respective maintenance discipline for action, and the appropriate equipment is taken out of service by the operators. Energized equipment is cleared, with a tag placed for the crew chief of the work force involved. Upon completion of the work, the equipment is released to operations by the maintenance group and is put into service. This entire method of performing maintenance is without the benefit of a standardized priority system based on impact to plant output parameters, and is devoid of any planning activity.

The operators at all positions take periodic readings of equipment parameters, and these are recorded on daily log sheets. The data collected is forwarded to the Inspection, Testing and Reporting (ITR) section for report preparation and filing. Very little analysis of the data gathered was observed by the team.

The maintenance department engineers were eagerly awaiting the arrival of a computerized maintenance system currently being developed in the Guddu Power Station. This system will feature a computer based work request form, and will provide for a planning function. Spare parts inventory and cost accounting data will be a part of the system, and a standardized method of scheduling manpower will be available. These functions are all currently performed on a manual basis, or not at all. Stores inventory replenishment is quite cumbersome with the requirement to issue a tender notice without the benefit of a life cycle cost analysis. Extensive documentation has been provided on all the major equipment. These documents reside in the technical library, and are poorly organized and rarely used. Job specific procedures have not been prepared for most jobs, and task performance is highly dependent on the individual worker's skills and knowledge. Maintenance schedules are used to perform routine maintenance

BEST AVAILABLE DOCUMENT

on a periodic basis. Some of this work is scheduled on a calendar basis, and some work is scheduled on operating hours based on recommendations of the equipment manufacturer

The plant chemistry section appears to be the most organized and systematic in the performance of department functions. All water chemistry testing is in accordance with ASTM or JSI standards, and specific procedures have been prepared for all routine tasks. The employees have been trained on the procedures, and cross-training between fuel oil treatment chemistry functions and water treatment and control functions is an ongoing process.

The plant administrative department, although not observed directly, appeared to have significant room for improvement. The system for written correspondence was reported to be cumbersome and quite ineffective at times. Their is no stationery stores, and special requests need to be authorized by the Chief Engineer to procure necessary items locally. Arrangements for photocopies required requests in writing and approved by the Chief Engineer even for small lots of 10 pages or less.

The most serious deficit in management systems is in the areas of plant output parameter improvement. There is no attempt to calculate and monitor basic plant performance indicators such as unit heat rates, plant availability or equipment performance factors. Average heat rates are dutifully calculated and reported monthly to comply with the form "E" pro-forma required by WAPDA house, Lahore, but no analysis or action for improvement is initiated. The concept of combined cycle heat rate and availability is not understood or recognized by plant people, an the terminology of equivalent forced outage rate (EFOR) is unknown. Scheduled outage durations are based on manufacturer's estimates, and no management efforts are made for improvement. Maintenance outage work is performed in the shadow of forced outages, resulting in grossly distorted data for both categories. Incremental load heat rate tests have not been conducted, nor has actual data been recorded for varying ambient temperatures with different fuels. No one at the plant appears to understand the concept of net verses gross capacity and heat rates. The decision to generate electricity is based on the relevant purchase price of a tone of one fuel compared to another, if it is available.

BEST AVAILABLE DOCUMENT

SECTION XII

PROPOSED ORGANIZATION STRUCTURE

The proposed organization structure is an alternative arrangement that will make the sale of Kot Addu Power Corporation (KAPC) more attractive. The elements of this structure are shown on Figures 3a-3d and include a board of directors, CEO and Vice Presidents of various functional groups. The total number of authorized complement is 373 and is based on GT 1 and 2 burning furnace oil and GT 3 and 4 burning diesel oil. If the situation were to change and an adequate supply of natural gas were guaranteed, the total number of employees would be reduced by about 20.

The proposed organization structure provides for a separation of plant operation and maintenance functions from the necessary functions of finance, procurement and human resources. Advantages of this arrangement include a focus on plant unit performance parameters while providing for separate maintenance forces in the colony and the plant proper. This provides for a certain degree of flexibility of manpower utilization during short term periods of special needs.

Each sub group in the organization has a number of dedicated training personnel. The result is a significant increase in the level of training for all employees in specific application areas. The subsequent improvement in employee net worth, both inside and outside the plant, will become a boon to both the corporation and the community.

The estimates of total employees is preliminary in nature, and is based on conditions expected to exist after initial corporatization efforts have been completed. Additional contract labor may be required to perform large equipment overhauls on a three to five year per unit basis. Also, the standing complement should be reviewed and adjusted periodically as plant conditions and needs change.

BEST AVAILABLE DOCUMENT

KOT ADDU POWER COMPANY
PROPOSED ORGANIZATION STRUCTURE

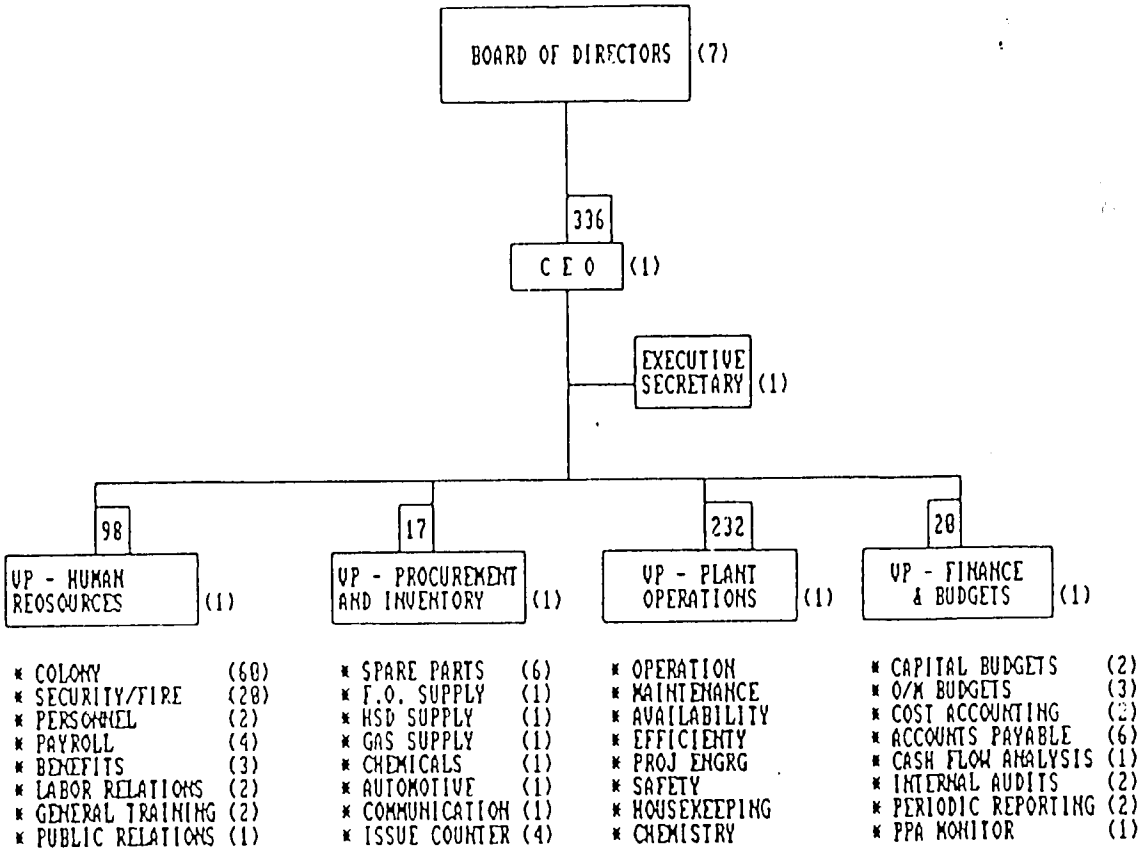

* FUNCTIONAL ACCOUNTABILITY AREAS

(NN) NUMBER EMPLOYEES PER FUNCTION

[NN] TOTAL PERMANENT EMPLOYEES

FIGURE 3-a

BEST AVAILABLE DOCUMENT

KOT ADDU POWER CORPORATION
PROPOSED PLANT OPERATIONS STRUCTURE

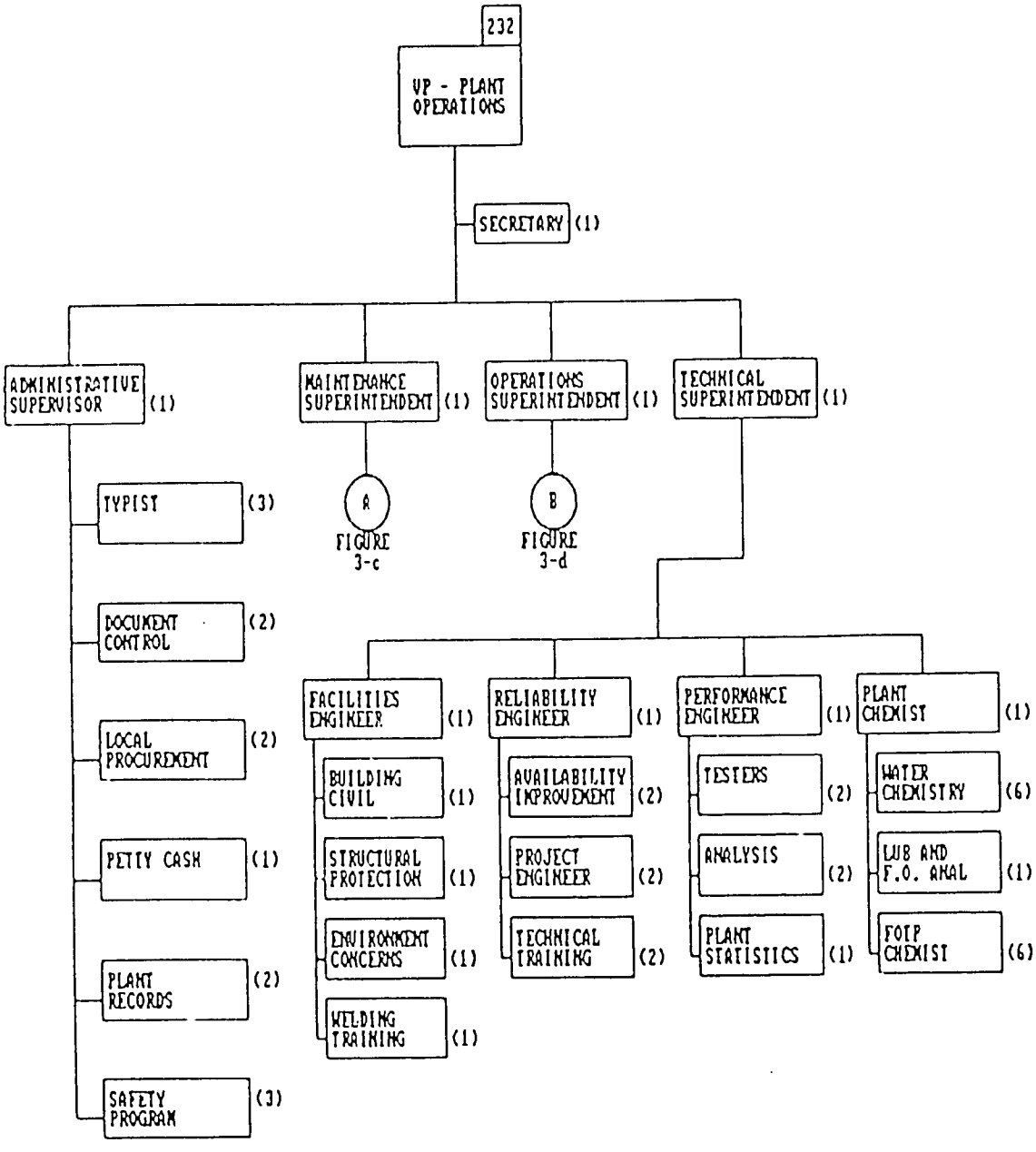

FIGURE 3-b

BEST AVAILABLE DOCUMENT

40

KOT ADDU POWER CORPORATION
PROPOSED PLANT MAINTENANCE DEPARTMENT

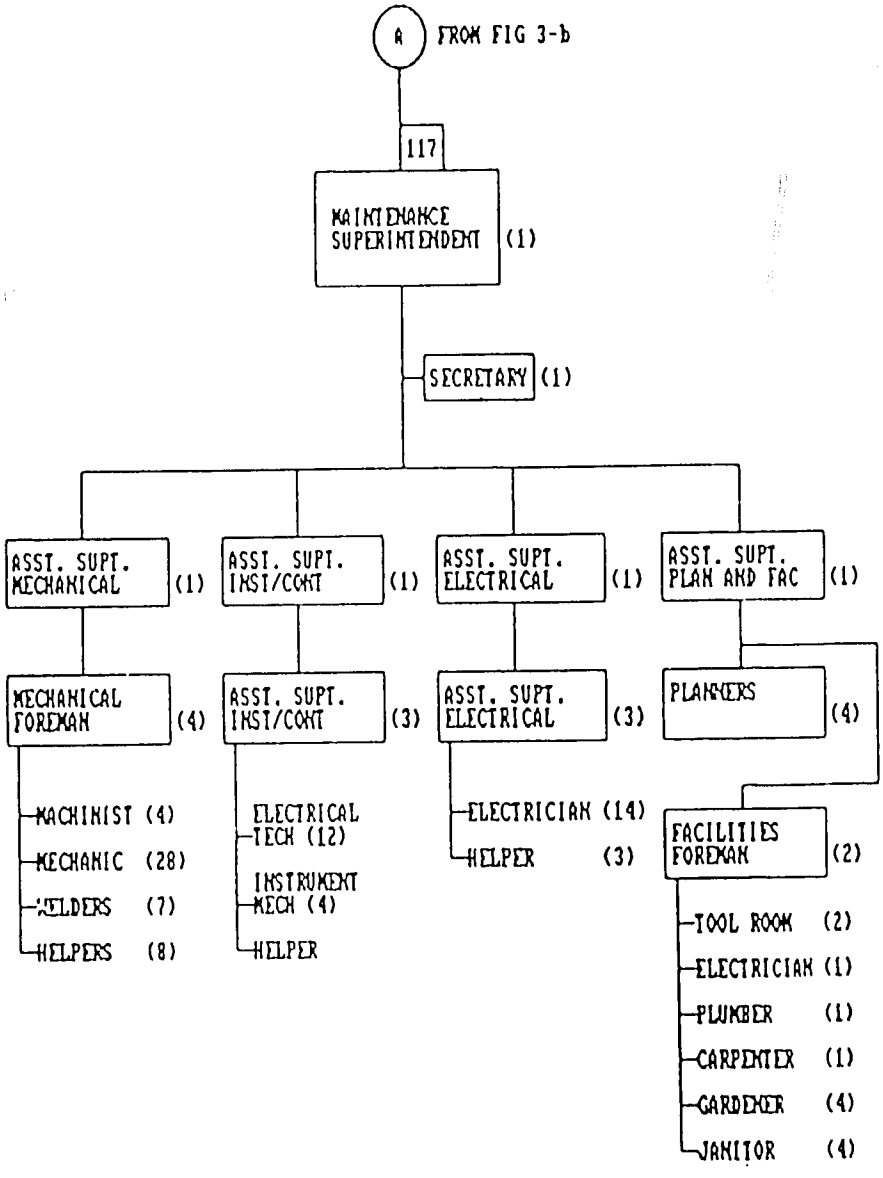

FIGURE 3-c

BEST AVAILABLE DOCUMENT

41

KOT ADDU POWER CORPORATION
PROPOSED PLANT OPERATION DEPARTMENT

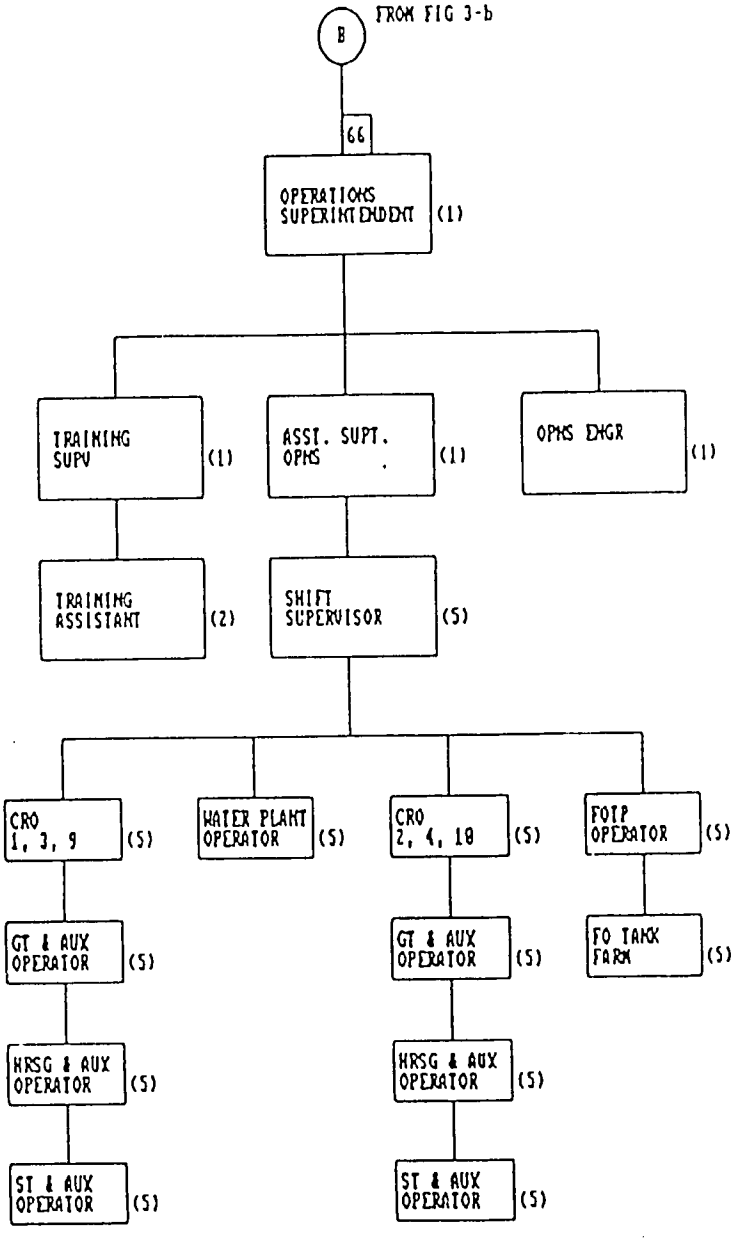

FIGURE 3-d

BEST AVAILABLE DOCUMENT

42

SECTION XIII

PRIVATIZATION RELEVANT ISSUES

In the performance of the due diligence on the organizational structure management systems and staffing capabilities of the new Kot Addu Power Corporation (KAPC), a number of relevant thoughts came to mind. Below is a draft of these issues that will make KAPC more attractive for privatization at a later date. When these ideas have materialized and have been implemented, WAPDA will have significantly increased the value of the plant, and the people in it.

First, an overall objective for the Corporation should be formulated. This should be done with input from members of all KAPC functional groups. The objective should be written, attainable, specific enough to stimulate action, and clear enough to be understood by all KAPC employees. Both short term (6-18 mo) and long term (3-5 years) goals need to be devised that support the overall objective.

Secondly, a system of indicators should be developed to provide a measurement of success. These indicators need to be fact based, and should be calculated from data gathered that reflects the degree of goal achievement. One or two indicators for each goal should be sufficient. The indicator parameters should be trend charted and made visible for all employees.

Next, a clearly defined accountability of each department and the individuals in that department should be made. The contribution of accountability fulfillment, as measured by the indicators, to achievement of the KAPC goals should be communicated and understood by all department employees. Hazards of accountability non-fulfillment should also be outlined and understood.

Fourthly, the functions necessary to achieve the defined accountabilities must be identified. This step is to ensure that everything being done has some direct, or indirect impact on the success of the organization. A list of activities and tasks should be generated that support the functions. The degree of specificity of these activities will increase as the level in the organization decreases. If it is not on the list, don't do it. Procedures on how to perform the activities and tasks need to be written. These procedures should be specific enough to insure the desired outcome is produced, but abstract enough to allow for creativity. Procedures need to be changed whenever new methods or technology are made available and are proven.

Next, there needs to be adequate training on how to perform the required activities. This training should be a proper blend of theoretical and practical, so the individual will understand why he is doing something as well as how to do it. The training should be to the procedure developed. Once training is completed, expectations can be made on the employee to complete the task following the procedure. Each employee should have the freedom to apply the training given, and should be encouraged to do so. Refresher training on existing procedures should be a routine way of doing business.

BEST AVAILABLE DOCUMENT

43

Finally, a spirit of interdepartmental teamwork and employee participation needs to be developed and cultivated. Everyone in the KAPC should be aware of their individual contribution to the corporation's goals. They also need to understand that they alone cannot achieve these goals, they are an important part of a team. KAPC management also must realize that the workers are not just arms and backs, they also have eyes, ears and brains. Their ideas are important, and they should be encouraged to express them. They are the people closest to the actual process, and understand the details of their jobs better than anyone. Their ideas and suggestions for improvement should be listened to and acted upon.

The key to success of the above guidelines is the top down approach with management commitment at all levels. This factor should be a consideration when selecting the officers and senior staff members of KAPC. The opportunity to start a new venture with a "clean slate" approach presents a challenge toward improvement. As with all successful corporations today, a method for revision of the elements of the process must be available.

BEST AVAILABLE DOCUMENT

APP. A

CONTROL WORK PLAN CWP 1.40.1

BEST AVAILABLE DOCUMENT

45

APP. B

TEAM MEMBER EXPERTISE SUMMARY

Fred Stone has worked in the power industry for 29 years, with 23 years association with Florida Power and Light Company (FPL), and 6 years mechanical design of gas turbine hot section components. During his time with FPL he worked at six separate power stations, comprised of various combinations of power producing equipment. Included were single cycle aircraft - derivative gas turbines, oil and gas fired conventional fossil units and a two unit combined cycle plant burning both heavy oil and diesel fuel. Mr. Stone has served in various functions, including performance test engineer, plant chemist, reliability engineering, plant technical training, maintenance superintendent, operations superintendent and plant manager. His activities involved supervision of up to 120 people on a full time basis, with excursions up to 600 workers during major plant overhaul periods. Mr. Stone holds a BSME degree from the University of Florida and an MBA degree from NYIT at Nova University.

Mr. Dennis Evans has over 30 years in the power generation field both fossil and nuclear. Has held positions as Operation Manager, Maintenance Manager, Plant Manager, start up engineer, construction coordinator and Shift Engineer. Has an associate Nuclear engineering degree from Colo State university and PE/nuclear from Colorado. Performed peer evaluation at ten nuclear plants throughout USA and one in Japan and Taiwan. Also on fossil plants within our own system.

BEST AVAILABLE DOCUMENT

APP. C

COMBINED CYCLE HEAT RATES

	CC-1 (1-3-9)		CC-2 (2-4-10)	
1992 MONTH	NET GEN (MW HR)	NET HEAT RATE (BTU/KWHR)	NET GEN (MW HR)	NET HEAT RATE (BTU/KWHR)
JAN	121,111	9,821	104,410	11,012
FEB	43,718	14,329	103,817	10,670
MAR	7,641*	18,568*	35,853	12,812
APR	36,648*	15,435*	43,233*	13,955*
MAY	11,805*	16,783*	17,713*	15,001*
JUNE	21,962*	15,170	36,976	11,121
JULY	42,333	11,259	34,427	11,297
AUG	38,025	11,261	12,085*	13,473
SEPT	76,022	10,350	14,976*	12,599*
OCT	76,037	9,176	607*	17,797*
NOV	76,112	9,324	61,474	9,045
DEC	INFORMATION FOR DEC '92 NOT AVAILABLE			
TOT/AVG	551,414	10,840	465,571	10,590

BEST AVAILABLE DOCUMENT

NOTES:

1. Items marked * were months where at least one of the electrical generators were idle

2. All data from Form "E" as transmitted to WAPDA

3. All data is monthly averages only

4. Design combined cycle net heat rate is 7800 Btu/kwh

BEST AVAILABLE DOCUMENT

APP. D

ECONOMIC EVALUATION MODEL

The costs associated with using Furnace Oil (FO) at Kot Addu are different than those related to burning High Speed Diesel (HSD) or Natural gas fuel. In order to make an informal decision as to which fuel is the best choice, an in-depth economic analysis should be performed. Currently there is an inadequate supply of fuel of any type at the Kot Addu site. Once the most cost effective fuel is determined, a concentrated focus toward activities required to insure an adequate long term supply of that fuel type needs to be made.

The analysis would consider all fuel related costs, and should be calculated on a basis of rupees/day for accurate comparisons. The assumption that the total combined cycle unit is available and operating at full load for a 24 hour period must be made. Tests will have to be conducted to determine actual values of cost parameters related to the type of fuel used. Accounting methods may also have to be reviewed and modified.

The basic model can be stated as:

$$Cost_x = A_x + B_x + C_x + D_x + E_x$$

Where:
- X = fuel type (FO, HSD, or gas)
- A = delivered cost to plant site, Btu basis
- B = costs required to deliver fuel to combustors
- C = fuel related equipment maintenance costs
- D = lost revenue due to full or partial fuel related outages
- E = costs associated with lower operating heat rate

The economic analysis would be simplest to assume values for B, C, D and E are zero for natural gas fuel, and assigning differential costs for FO and HSD compared to gas. Since the cost/Btu for all types of fuel is known, values for A_x can be readily calculated. The remainder of this section will address items B_x, C_x, D_x, and E_x. X = HSD and X = FO.

<u>For HSD Fuel</u>:

B_{HSD} This would include storage, testing and pumping costs for HSD. Electrical auxiliary usage and wages for operators and technicians over and above that required for natural gas firing fall into this category.

C_{HSD} Those costs associated with more frequent hot section inspections, gas path inspections and major overhauls due to HSD penalty factors in the equivalent hours scheme would be written here. Actual annual costs would to be amortized

on a daily basis before adding to the basic model equation. Costs related to turbine washing, if applicable, should be included in this value. Replacement parts and labor, as compared with natural gas, will be a large portion of this number.

D_{HSD} Assuming natural gas fuel as a baseline, determine number of MW lost due to HSD fuel related derating. Considering the combined cycle unit, the total of both GT's and the ST load reduction must be included. MW lost x 24 hrs. x Rs/MW hr will result in a daily cost for partial outage due to fuel derating. Added to this value will be the cost of lost revenue due to additional maintenance outages caused by burning HSD. Total MW unavailable x No. hrs unavailable x Rs/MW hr must be calculated and added into D_{HSD}.

E_{HSD} This area is where costs associated with total combined cycle heat rate variations due to burning HSD when compared to gas must be considered. Actual controlled tests must be conducted to determine the degree of variations, if any. If the heat rates are lower for HSD than gas, this will be a negative number when entered into the basic model equation.

For FO Fuel:

B_{FO} This value would include actual costs related to moving fuel from untreated tanks, through the treatment process, to the treated storage tanks, and finally from the treated storage tanks to the gas turbine combustors. All costs associated with pumping FO must be considered, and will include auxiliary boiler operation in the fuel forwarding area, as well as electric heat tracing in the fuel delivery area. The costs of vanadium inhibitor, dosing pump systems and atomizing air systems need to be considered here. Maintenance costs on the extra equipment, and well as wages for additional personnel to operate and maintain this equipment should be amortized on a daily basis.

The category is where all costs associated with the Petrolite Fuel Oil Treatment Plant (FOTP) need to be calculated and included. Fuel for oil heaters, cost of chemicals added, costs of water used, cost of electric auxiliaries, costs of chemical laboratory, disposal costs of sludge and oily waste water, maintenance charges on FOTP equipment, as well as wages and benefits for FOTP operators and laboratory technicians are among the considerations in this section. The costs associated with procurement, inventory, storage and handling of FOTP chemicals should also be considered. These costs should be readily available on an annual basis, or perhaps a per gallon treated basis, and could be easily converted to a daily charge using actual and forecasted operating hours.

C_{FO} As with C_{HSD}, actual costs associated with turbine washing, more frequent hot section and gas path inspections and more costly major overhauls need to be considered. The influence of more severe multipliers in the equivalent hours

BEST AVAILABLE DOCUMENT

calculations should be addressed here. All these additional costs will have to be compared against zero costs for natural gas in order to arrive at a meaningful comparison. Also, this would be the area to include those operational costs associated only with burning FO, such as HRSG soot blower operation, HP circulation pump operation and atomizing air systems

D_{FO} Assuming natural gas parameters as a benchmark, determine total number of MW lost due to FO fuel related deratings. The reduction in ST output, as well as GT generation defecits would be combined. The formula is MW lost x 24 hrs x Rs/MW hr. Added to this value will be a charge for the cost of lost revenue during additional maintenance outages required by burning FO. Total MW unavailable x No. hours duration x Rs/MW hr must be calculated, converted to a daily rate, and added into D_{FO}.

E_{FO} This section is where costs associated with total combined cycle unit heat rate variations due to burning FO as compared to gas must be considered. Actual tests will have to be conducted to gather data required to determine the amount of variation in heat rate. If the heat rates are lower for FO than for gas, the value will be a negative number when entered into the basic model equation.

The cost of fuel burned is the single largest on-going expense of any power plant, and the type of fuel is a significant contributor to unit availability at Kot Addu. A serious attempt to perform an economic evaluation of the appropriate fuel must be made. Subsequent activity to insure an adequate supply of this fuel is mandatory. Otherwise, the Kot Addu power station will never reach its potential as a significant factor in alleviating the energy shortfall of the Country, regardless who the owner/operator is.

BEST AVAILABLE DOCUMENT