PN-ABU-452

Environmental Assessment of the Fier Nitrogen Fertilizer Factory in Albania

Funded by

United States Agency for International Development (USAID)

Grant No. 180-0046-G-00-2491-02 as Amended

Prepared by

International Fertilizer Development Center
P.O. Box 2040
Muscle Shoals, Alabama, U.S.A.

March 21, 1995

Acknowledgment and Thanks

The management of IFDC is grateful for the efforts and assistance of a large number of Albanians and others without whose support our team could not have completed this study.

We are particularly appreciative of the valuable contributions provided by the staff of the various departments at the Fier Nitrogen Fertilizer Factory dealing with production, maintenance, technical, and safety.

Finally, we are indebted to the United States Agency for International Development (USAID) for providing the financial assistance that made the study possible.

International Fertilizer Development Center
March 1995

Amit H. Roy
President and Chief Executive Officer

Environmental Assessment of the Fier Nitrogen Fertilizer Factory in Albania

Executive Summary

Introduction

An environmental assessment of the Fier Nitrogen Fertilizer Factory located in Fier, Albania, was undertaken by the International Fertilizer Development Center (IFDC) with grant funding assistance from the United States Agency for International Development (USAID).[1] The assessment was performed in support of the ongoing effort to restructure the Fier Factory and restore it to an economic level of operation in an environmentally sound way. The assessment examined the status of the Fier Factory facilities from an environmental point of view and recommends what actions need to be taken, and what costs will be incurred, to bring the plant facilities into compliance with current acceptable international standards for pollution control. This assessment is a refinement of an earlier technical/economic evaluation of the environmental issues discussed in the IFDC report entitled "Technical and Economic Evaluation of the Fier Nitrogen Fertilizer Factory in Albania" which was submitted to USAID in July 1993.

The IFDC team consisted of Mr. José Ramón Lazo de la Vega – Ammonia/Urea Specialist (Team Leader) and Mr. Kees Oomen – Ammonia/Urea/Environmental Specialist. The team was in Albania during the period September 13-23, 1994.

The original design of the Fier Factory production units did not include adequate attention to environmental concerns and pollution control and abatement. However, with the addition of adequate pollution control and treatment facilities, the Fier Factory production units can be made environmentally safe. Additionally, the Fier Factory needs to

---

[1]Grant No. 180-0046-G-00-2491-02 as amended September 30, 1993, and June 24, 1994.

adopt a different operating philosophy from that currently practiced at the facility. It will also be necessary to institute proper operating and safety procedures together with methods to continuously monitor the procedures.

A stepwise investment program for the addition of effluent treatment facilities to the production units should be developed based on the availability of natural gas for the plants. However, an immediate start should be made with the implementation of proper operating and safety procedures and with a management-led environmental program with adequate monitoring to ensure that the entire plant staff is made aware of the importance of correcting the environmental issues.

In addition to the environmental assessment, the IFDC team also updated information on the natural gas supply situation and the expected production costs that would be encountered by the Fier Factory if it is operated at design capacity. Subsequent to the September 1994 update of the natural gas supply situation, another update was performed by the IFDC-Albania staff in January 1995. The January 1995 update confirms that the domestic supply of natural gas for industrial use in Albania is declining at an alarming rate.

Description of Production Units

Train 1 (Referred to as Unit 210)

Train 1 consists of an ammonia unit, a nitric acid unit, and an ammonium nitrate unit. This train was designed in Italy and commissioned in 1966. The ammonia unit was designed for the production of 150 mt/day anhydrous ammonia. The unit is equipped with a gasification section originally designed to use straight-run naphtha for feedstock. In 1971 the plant was modified to use natural gas as feedstock. In 1991 the plant was again modified to use gasoline as feedstock. This latter modification was performed because of the shortage of natural gas.

The nitric acid unit was designed for the production of nitric acid (HNO_3) with a concentration of 53% HNO_3 at a capacity of 270 mt/day of acid (100% HNO_3 basis). The design of the unit is based on the catalytic oxidation of ammonia with oxygen in the presence of a platinum catalyst.

The ammonium nitrate unit was designed to produce prilled ammonium nitrate at a capacity of 340 mt/day.

Train 2 (Referred to as Unit 211)

Train 2 consists of an ammonia unit and a urea unit that were designed in China and commissioned in 1976. The ammonia unit was designed for the production of anhydrous ammonia at a capacity of 180 mt/day. The process is based on natural gas reforming.

The urea unit was designed for a capacity of 265 mt/day of prilled urea. The design of the urea synthesis unit is based on the total recycle process.

Train 3 (Referred to as Unit 212)

Train 3 consists of an ammonia unit and a urea unit. This train is very similar to Train 2 with the exception that Train 3 has a slightly larger production capacity. The ammonia plant in Train 3 has a design capacity of 212 mt/day and the urea plant has a design capacity of 320 mt/day. Train 3 was commissioned in 1991, and it was also designed in China by the same firm that designed Train 2.

A Plan of Action and Estimated Cost

The various Fier Factory production units can be equipped with effluent treatment facilities to make the plants meet international standards typically applicable to new fertilizer facilities. This is, however, only one side of the problem faced by the Fier Factory. In addition to the fact that the plants have not been designed to achieve internationally acceptable effluent standards, the plants show a lack of maintenance and adequate

housekeeping caused by the shortage of spare parts and, of course, inadequate financial resources. Some effluent treatment facilities are simply not in operation, and some of the effluent collection systems are in very poor mechanical/operating condition.

Based on the quantity of natural gas available to the Fier Factory in the future and considering the possible future connection to the former Soviet Union gas supply network, it is recommended to implement a stepwise environmental investment program for the Fier Factory facilities. In summary it is recommended that the following sequence of actions be implemented to make the operation of the Fier Factory facilities environmentally acceptable. The total cost of the environmental investment program as shown in Table 1 is estimated at US $5.75 to $7.23 million. If only the most modern ammonia/urea production unit (Train 3) is upgraded and Trains 1 and 2 are retired, the investment may be decreased to about US $3.48 million. However, because the Fier Factory ammonia plants, including Train 3, produce an excess of ammonia with respect to carbon dioxide required for the synthesis of urea, the excess ammonia must be consumed; currently the Train 1 nitric acid and ammonium nitrate units are used for this purpose. Alternative methods for achieving a balance between ammonia and carbon dioxide production so that only urea would be produced are technically complex and costly.

Action 1

Provide local currency funding equivalent to about US $100,000 to $125,000 (maximum) to (1) repair the existing Fier Factory sewer systems, (2) repair and restore the operation of the existing wastewater effluent treatment system, (3) install facilities to collect waste oil from compressor and pumps (to prevent the oil from entering the sewer system and soil), (4) separate storm water drainage systems from process effluent drainage, (5) construct dikes around storage tanks, (6) establish a housekeeping program, (7) establish a safety program, and (8) start an employee environmental/safety awareness program led by the Fier Factory management. In addition to the environmental/safety awareness program, it is recommended that the Fier Factory implement an effective quality management program. Generally, this means showing evidence of compliance with ISO 9000 series standards. Such evidence (registration) of ISO 9000 compliance is currently not

mandatory, but is becoming important for remaining competitive in a free market environment. All tasks mentioned in Action 1 can be carried out by the Fier Factory staff using their existing workforce and/or local contractors and resources. Action 1 should be implemented immediately. As the projects are not specific to individual process units, they are needed for the entire factory site regardless of how many of the production units are ultimately operated based on the availability of natural gas.

Action 2

Based on the amount of natural gas available to the Fier Factory after the Delvina natural gas wells have been treated (acid fracture stimulation) and additional well(s) are brought into production, it is recommended to provide an estimated funding in the amount of US $4,210,000 (minus 0%, plus 25%, about $5.3 million maximum) to design, procure, and install the following pollution abatement equipment. If any rehabilitation/upgrading of Train 1 is eliminated from this action, the investment would be decreased by about US $0.83 million.

- A nitrogen oxide (NO_x) abatement unit in the nitric acid plant from Train 1.
- A liquid additive injection unit (i.e., Galoryl®) for product conditioning in the ammonium nitrate plant of Train 1.
- A scrubber for process vents in the ammonium nitrate plant of Train 1.
- A hydrogen removal unit in the urea unit of Train 3 to remove hydrogen from carbon dioxide (CO_2) feedstock fed to the urea unit.
- An ammonia process condensate treatment unit in the ammonia unit of Train 3.
- A process condensate treatment unit in the urea unit of Train 3 to treat urea process condensate from the urea units of Trains 2 and 3.

- A new flare system for burning hydrogen sulfide (H_2S) from the gas treatment unit that serves all three trains.

Action 3

Provide funding in the estimated amount of US $1,440,000 (minus 0%, plus 25%, about US $1.8 million maximum) to install the following pollution abatement equipment. Action 3 should only be implemented when sufficient natural gas is consistently available to the Fier Factory to operate Trains 2 and 3 at their minimum practical capacity.

- An ammonia process condensate treatment unit in the ammonia unit of Train 2.

- A silencer for the ammonia unit of Train 2.

- A hydrogen removal unit in the urea Train 2 to remove hydrogen from the CO_2 feedstock fed to the urea unit.

Implementation of the above plan of action will enable the Fier Factory to operate in compliance with current acceptable international standards for pollution control, environmental protection, and safety. In addition, the plant will become more efficient in the use of its resources, particularly natural gas fuel and feedstock.

Onsite Technical Assistance

Implementation of the above stepwise plan of action will require a major technical/ engineering and project management effort involving a number of international suppliers of equipment and services. Therefore, to facilitate a timely and cost-effective implementation of the environmental upgrading program, it is recommended that a resident consultant skilled in ammonia/urea production, environmental upgrading, procurement and contracting, and project management be assigned to the project and posted at the Fier Factory on a full-time basis for a period of about 2 years. The cost of the proposed resident consultant is not included in the investment cost described in this report because it is envisioned that the cost of the consultant would be funded by a donor such as USAID.

Natural Gas Supply Situation – The Most Critical Issue

The most critical issue that needs to be resolved before the Fier Factory can be restored to an economic and environmentally safe operation is a reliable supply of natural gas. Information received by IFDC during the study performed in March 1993 indicated that a total of about 270,000 m^3/day of natural gas was produced in Albania. The IFDC team that visited the Fier Factory in September 1994 was informed that the present production of natural gas in Albania had declined to about 204,000 m^3/day, which represents a decrease, over a period of 1½ years, of almost 70,000 m^3/day. As of December 1994, the production of natural gas had reached catastrophically low levels of about 120,000 m^3/day.[2] Therefore, if the Fier Factory is to operate on a continuous basis in the near future, it is essential to rework the Delvina wells using the acid fracture stimulation technique as described in the previously mentioned July 1993 *IFDC Report*. However, it is important to point out that the acid fracture stimulation program would have to be supplemented with additional natural gas (up to 60,000 m^3/day) from existing and/or new wells in order to meet the present country demand and still have enough natural gas to operate only one of the ammonia plants at near design capacity.

The amount of natural gas required to operate the Fier Nitrogen Factory ammonia production units at design capacity is summarized below:

---

[2]IFDC internal report entitled "Albania Gas Production Situation and Potential for Increasing Supply" prepared by R. B. Diamond, Chief of Party, IFDC-Albania, January 1995.

Production Unit	Natural Gas Required[a]
	(m^3/day)
Train No. 2 (Unit 211)	211,250
Train No. 3 (Unit 212)	233,200
Train No. 2 plus 3	444,450

a. The natural gas required is slightly higher than shown in the July 1993 *IFDC Report* as it more closely reflects reported actual consumption at design capacity.

It is possible to operate the ammonia units at as little as 60%-65% of design capacity. However, the consumption of natural gas per unit of ammonia will increase substantially due to process inefficiencies.

Production Costs

An update in the production costs for the Fier Factory was also performed by the IFDC team while performing the environmental assessment. This update in the cost structure is critical to determine if, indeed, the Fier Factory has the potential to be financially attractive and be a viable candidate for privatization, assuming a reliable supply of natural gas, at market prices, is available.

From the current analysis of the data obtained at the Fier Factory, it is concluded that the current cash cost of producing nitrogen fertilizer in the form of urea in Train 2 (Unit 211) alone at a design capacity of 87,450 mtpy would be US $129.7/mt (bagged) or US $119.7/mt (bagged) for urea produced in Train 3 (Unit 212) alone at a design capacity of 105,600 mtpy. If natural gas is available to operate both ammonia/urea trains simultaneously at design capacity (total combined urea production of 193,050 mtpy), the cash cost for producing urea would be US $108.9/mt (bagged). These costs are calculated when natural gas, the critical fuel and feedstock required by the process, is priced at

6,300 Leks/1,000 m^3 (US $2.36/million Btu at an exchange rate of 95 Leks/US $). This natural gas cost is representative of market prices in the region.

For this production cost update, the cash cost is defined as the production cost without considering financial costs; the initial fixed investment is viewed as a sunk cost. When the new investment required to upgrade the Fier Factory to comply with the international environmental standards is included, the cost of producing urea, including fixed capital recovery on the new investment, will increase by about US $3.5-$6.0/mt in either Train 2 or Train 3 when operating separately or together at design capacity. The production costs for the alternatives are summarized below:

Train No.	Urea Production (Design Capacity)	Production Cost of Bagged Urea		
		Without Capital Recovery	Capital Recovery	Total Cost With Capital Recovery
	(mtpy)	(US $/mt)		
2 (Unit 211)	87,450	129.7[a]	5.8[b]	135.5[b]
3 (Unit 212)	105,600	119.7[a]	5.6[b]	125.3[b]
2 & 3 (Units 211 & 212)	193,050	108.9[a]	3.5[b]	112.4[b]

a. These production costs do not include any financial costs; the initial fixed investment is viewed as a sunk cost.
b. These total production costs include fixed capital recovery for the new base case investment (US $5.75 million) required to upgrade the Fier Factory to comply with internationally accepted environmental standards. A 10% annual interest rate and a 15-year payback period is assumed. The capital recovery charge would be about 25% less if the upgrading is limited only to Train 3.

Thus from this analysis it is clear that the Fier Factory has the potential to be competitive in the international market where at present bagged urea sells for about US $185-$190/mt, f.o.b. the factory gate in the region.

Table 1. Investment Required to Environmentally Upgrade the Fier Nitrogen Fertilizer Factory

	Investment[a] (US $ x 1,000)
Action 1	
■ Repair existing sewer systems	
■ Repair and restore the operation of the existing wastewater treatment system	
■ Install facilities to collect waste oil from compressors and pumps	
■ Separate storm water drainage systems from process effluent drainage systems	
■ Construct dikes around storage tanks	
■ Establish a housekeeping program	
■ Establish safety program	
■ Implement an environmental/safety awareness program	
Subtotal	100-125[b]
Action 2	
■ Procure and install the following pollution abatement equipment:	
• A nitrogen oxide abatement unit for the nitric acid plant of Train 1	700
• A scrubber for process vents in the ammonium nitrate plant of Train 1	100
• An additive injection unit in the ammonium nitrate plant of Train 1	30
• A hydrogen removal unit in urea unit of Train 3	200
• An ammonia process condensate treatment unit for ammonia unit of Train 3	1,380
• A process condensate treatment unit for urea units of Trains 2 and 3	1,750
• A new flare system for burning hydrogen sulfide (H_2S) from the gas treatment unit that serves all three trains	50
Subtotal	4,210 - 5,300
Action 3	
■ Procure and install the following pollution abatement equipment:	
• An ammonia process condensate treatment unit for the ammonia plant of Train 2	1,250
• A silencer for the ammonia unit of Train 2	10
• A hydrogen removal unit in urea unit of Train 2	180
Subtotal	1,440 - 1,800[c]
Total	5,750 - 7,225

a. Estimates are based on a minus 0% plus 25% accuracy. The larger values represent the plus 25% case which would be the maximum investment required to implement the project.

b. These funds should be provided in local currency to enable the Fier Factory to perform the tasks indicated in Action 1 using local resources.

c. This investment should be made only when sufficient natural gas is available to the Fier Factory to operate Trains 2 and 3.

Table of Contents

	Page
Introduction	1
Content of Report	2
Description of the Fier Factory Production Units	3
Environmental Assessment	8
Discussion on Environmental Issues and Upgrades	13
Natural Gas Supply Situation	22
Production Costs	27

Appendix A. General Guidelines for Design and Operation of Containment Dikes

Environmental Assessment of the Fier Nitrogen Fertilizer Factory in Albania

Introduction

In 1993 the International Fertilizer Development Center (IFDC) performed a technical and economic evaluation of the Uzina Plehrave Azotike Fier (Fier Nitrogen Fertilizer Factory) referred to throughout this report as the Fier Factory. The evaluation was performed under the terms of a grant from the United States Agency for International Development (USAID).[1] The 1993 evaluation was performed by three IFDC engineers who visited the Fier Factory for a period of three weeks (February 14 through March 6, 1993). The output of the 1993 evaluation is recorded in the IFDC report entitled "Technical and Economic Evaluation of the Fier Nitrogen Fertilizer Factory in Albania," which was submitted to USAID in July 1993.

Under the same grant, IFDC undertook a second study (September 13-23, 1994) to perform a more detailed environmental assessment of the Fier Factory. The environmental assessment forms part of the overall project to assist the Fier Factory in restructuring its production facilities not only to become more efficient in the use of its resources and to bring the facility back to a sustained and economically effective operation, but also to be able to operate the production units in an environmentally sound way. The September 1994 study was conducted by Mr. José Ramón Lazo de la Vega, Ammonia/Urea Specialist (team leader) and Mr. Kees Oomen, Ammonia/Urea/Environmental Specialist.

The Fier Factory, compared with other industries in Albania, is relatively modern. The first two production units (referred to as Train 1 and Train 2) of the Fier Factory were put in operation about 25 years ago, and the last ammonia/urea unit (Train 3) was commissioned in 1991. When the Fier Factory facilities were constructed, they were equipped to a considerable extent with imported technology. The level of technology used at the time was sufficient to meet the local environmental regulations; energy conservation

---

[1]Grant No. 180-0046-G-00-2491 as amended September 30, 1993, and June 24, 1994.

and pollution-control standards were also less rigorous at the time. Most East European type plants were mainly designed and constructed based on unification and simplicity of operation; energy conservation and environmental pollution control were not considered highly important issues. The main purpose of the present environmental assessment was to identify those points in the facilities where pollution emissions occur and to identify the technology and cost required to decrease such emissions to internationally acceptable levels. These actions will enable the Fier Factory to comply with world standards on the emission of pollutants, thus creating a better environment for the personnel that work in the factory and for those that inhabit the nearby city of Fier.

In addition to the environmental assessment, the IFDC team also performed an update in the natural gas supply situation and the current and expected production costs encountered by the Fier Factory if it is operated at design capacity. The natural gas supply situation was further updated by the IFDC-Albania staff in January 1995.

Content of Report

This report contains the findings and recommendations of the study. Apart from the foregoing Executive Summary and this introductory section, which gives a general description of the study and the report, the report contains the following sections:

Description of the Production Units – This section of the report describes the physical plant installations as they presently stand, and highlights the capacities of each production unit and process interconnections available at present.

Environmental – This section describes the environmental problems within the different units, the actions required to remedy the problems, and the estimated investment cost required for correcting the deficiencies.

Update of Natural Gas Situation – This section describes the present natural gas supply situation to the Fier Factory, examines the possible availability of the natural gas fuel

and feedstock for the production of fertilizers in the near future, and describes actions required to ensure the increased availability of natural gas.

Production Costs – This section describes the production costs experienced by the Fier Factory during this year (1994); especially during the month of September 1994, when one of the ammonia/urea units was in operation. A comparison of the cost of producing ammonia and urea at the present capacity, limited by the supply of natural gas, and at full capacity after the plant has been environmentally upgraded is given. Intermediate capacity production cost data are also described.

In performing this study, extensive use was made of the previous IFDC report prepared in 1993. Most of the Fier Factory staff interviewed during the in-country visit were staff members of the departments dealing with production, technology, and safety. These same staff members were involved in the IFDC study prepared in 1993.

Description of the Fier Factory Production Units

The Fier Factory is the only nitrogen fertilizer production site in Albania. It is located in the city of Fier about 110 km south of Tirana. The Fier Factory has three fertilizer production systems referred to as "trains". Train 1 consists of an ammonia unit, a nitric acid unit, and an ammonium nitrate (AN) unit. Trains 2 and 3 each consist of an ammonia unit and a urea unit. Utilities are purchased from a separate power generating plant located adjacent to the Fier Factory. The power generating plant supplies the Fier Factory with the following utilities: electric power, boiler feed water, steam, and process water. **Figure 1** shows the three production trains and the minimum and maximum amounts of natural gas required to operate the units and the corresponding minimum and maximum plant production capacities.

Train 1 (Referred to as Unit 210)

Ammonia Plant – The ammonia plant of Train 1 was designed for the production of anhydrous ammonia with a nameplate capacity of 150 mt/day. It was designed and supplied in 1966 by Process Engineering Company Montecatini of Italy. With the exception of the

air separation unit using the Linde process, all of the process technology is from Montecatini.

The gasification section was originally designed to use straight-run naphtha as feedstock. In 1971 the plant was modified to use natural gas as feedstock. In 1991 the plant was again modified to use gasoline as feedstock. This latter modification was performed because of shortage of natural gas.

Oxygen from the air separation plant (ASP) and steam are introduced into the gasifier along with the feedstock which is compressed to operating pressure. The gasification reaction proceeds at high temperature. The gasifier process does not require the use of a catalyst. The gases leaving the gasifier contain carbon monoxide (CO), carbon dioxide (CO_2), and hydrogen (H_2) with some carbon soot which is suspended in the gases. After leaving the gasifier the gases enter a heat recovery system to generate steam and then pass into a wash section to remove the soot. The gases are cooled and enter a sulfur removal unit. From the sulfur removal unit the gases are saturated to increase their water content prior to entering into the shift converter where the CO reacts with steam to form CO_2 and H_2. From the shift converter the gases, after cooling and water separation, enter the CO_2 removal unit which uses an arsenic-promoted Giammarco-Vetrocoke® process. The arsenic (usually arsenic trioxide) works as an activator and differs from monoethanolamine (MEA), glycine, and other straight chain promoters in that the arsenic activating action is exercised through the entire phase of absorption and through the entire stripping operation. After the CO_2 removal unit, the remaining traces of CO and CO_2 are removed by scrubbing with a copper solution. The copper liquor is a solution containing both cupric and cuprous ammoniacal salts of formic acid plus an excess of ammonia. The gas leaves the copper solution scrubbing unit practically free of CO and CO_2 which are poison materials for the synthesis catalyst. Nitrogen from the air separation unit is introduced and mixed with the gas in the correct ratio for ammonia synthesis. The ammonia synthesis section is of the standard high pressure design. The liquid ammonia produced in the synthesis section is sent to a pressurized spherical storage tank.

All compressors in this ammonia unit are of the reciprocating type and mostly manufactured by Nuovo Pignone of Italy. The oxygen compressors were manufactured by Sulzer of Switzerland.

Nitric Acid Plant – The nitric acid plant was designed by Montecatini for the production of nitric acid (HNO_3) with a concentration of 53% HNO_3 with a nameplate capacity of 270 mt/day as 100% HNO_3. The design of the plant is based on the catalytic oxidation of ammonia with oxygen in the presence of a platinum catalyst at a pressure of 3.5 kg/cm^2 and a temperature of 840°C.

Air is compressed to 3.5 kg/cm^2 by a centrifugal compressor with a steam turbine driver and a tail-gas expander for power recovery. After the compressor, the air flow is mixed thoroughly with ammonia to give a homogeneous blend. The mixture enters the converter and in the presence of the catalyst it is oxidized to form nitrogen oxides. The catalyst consists of five fine mesh gauzes made of an alloy of 90% platinum and 10% rhodium. The reaction is highly exothermic, thus increasing the temperature of the product gases. In order to make use of the energy released by the reaction, a boiler to generate steam is installed at the exit of the converter. The boiler has the capacity to produce about 15,000-16,000 kg/h of steam at a pressure of 18 kg/cm^2. This steam is used in the turbine of the turbo compressor that feeds the process air into the converter. After the boiler, the product gas at a temperature of 250°-260°C enters heat exchangers for further cooling to a temperature of 40°C. In the heat exchangers, the gas undergoes a partial oxidation from nitrogen monoxide (NO) to nitrogen dioxide (NO_2) and HNO_3 (at a 25% concentration). The acid formed is sent to absorption columns. The gas leaving the heat exchangers (mainly NO) enters the oxidation zone of absorption columns where the NO is converted to NO_2. Here oxidation occurs in the free space between the sieve trays and absorption takes place on the trays. Cooling is performed by circulating water through tube coils. Make-up water for absorption is added at the top of the absorption column, product acid withdrawn at the bottom, and gas passed countercurrently through the unit. The product acid with a concentration of 53% HNO_3 is stored in tanks. The residual gas with a concentration of about 0.2%-0.15% of nitrogen oxides (NO_x) is reheated and exhausted to the atmosphere after passing through the power recovery expander on the process air compressor.

Because of an overall excess production of ammonia at the Fier Factory with respect to CO_2 (the natural balance required for the production of urea), it is necessary to produce some nitric acid/AN unless a market for the excess ammonia can be found (refer to "Nitric Acid Unit," page 16).

Ammonium Nitrate Plant – The ammonium nitrate (AN) unit was designed by Montecatini with a nameplate capacity of 340 mt/day of prilled AN. The AN unit consists of a (1) neutralization section (where ammonia and nitric acid react), (2) concentration reaction, and (3) prilling section.

Nitric acid (53% HNO_3) and anhydrous ammonia react in a neutralizer to produce AN solution with a concentration of about 73% AN. This solution is then concentrated to about 99.7% AN using a two-stage vacuum concentrator and pumped to the top of the prilling tower. At the top of the tower the practically anhydrous AN melt is sprayed through four spray heads. The AN droplets solidify while falling through the prilling tower and are collected at the bottom of the tower. The prilling tower has a rectangular cross section and is based on a natural draft design. The prills are cooled in a fluid-bed cooler, coated with finely ground limestone (calcium carbonate), and sent to a bulk storage warehouse. The warehouse is circular in shape and has a capacity of 1,000 mt.

Train 2 (Referred to as Unit 211)

Ammonia Plant – The ammonia plant was designed in China by the China National Machinery Import & Export Corporation, and most of the engineering, equipment, materials, and construction were supplied in 1976 by China. The plant has a nameplate capacity of 180 mt/day anhydrous ammonia. This plant is designed based on steam reforming of natural gas.

Before the natural gas enters the primary reformer in the ammonia plant, there is a facility to remove CO_2 and hydrogen sulfide (H_2S) using monoethanolamine (MEA) solution. This unit is used when the plant is fed associated gas from oil wells. If the gas does not contain high amounts of CO_2 and H_2S, the MEA unit can be bypassed. Compressed natural gas is pretreated for sulfur removal using Cobalt Molybdate and Zinc oxide catalyst-charged vessels. The sulfur-free gas is mixed with steam in a 4-to-1 ratio (steam to carbon)

by weight and then preheated to enter the primary reformer. The primary reformer is a side-fired radiant furnace containing 100 catalyst-filled tubes. From the primary reformer the gas enters the secondary reformer. Preheated air is introduced in the secondary reformer to provide the needed nitrogen to produce ammonia. After the secondary reformer the hot gases are quenched with water and then enter into a heat recovery boiler to produce steam. From the boiler the gases enter the high-temperature-shift (HTS) converter to react the CO with steam to produce CO_2 and H_2. The remaining CO in the gas mix is further converted into CO_2 in a low-temperature-shift (LTS) converter. The gas mixture with about 0.3% CO leaves the LTS converter to enter the CO_2 removal unit. The CO_2 removal system uses hot potassium carbonate promoted by vanadium pentoxide and aminoacetic acid. From the CO_2 removal unit the gas goes into a methanator to remove traces of CO_2 and CO by converting them into methane using a nickel catalyst. From the methanator the gas, free of CO and CO_2, enters the ammonia converter in the synthesis loop. Liquid ammonia produced in the synthesis loop is stored in two pressurized spherical tanks with a capacity of 304 mt each. All the compressors in the ammonia plant are of the reciprocating type and were fabricated in China.

Urea Plant – The urea plant was designed in China by the same company as the ammonia plant and has a nameplate capacity of 265 mt/day. The plant design is based on the total recycle process. It was commissioned in 1976 and since beginning operation, it has been possible to operate the plant at 300 mt/day.

Ammonia from the spherical storage tanks is transferred into an ammonia buffer tank in the urea plant. From here the ammonia is fed into a urea reactor by a set of three high pressure reciprocating pumps (two in operation and one on standby). Carbon dioxide from the ammonia CO_2 removal unit is compressed by reciprocating compressor and sent to the urea plant to enter the reactor at specified pressure and temperature conditions. Together with the ammonia and CO_2, recycled carbamate solution is also fed to the reactor. This carbamate solution is fed by three reciprocating pumps (two in operation and one on standby). These materials react inside the reactor to form urea. The CO_2 conversion efficiency in the reactor is approximately 62%, which is comparable to other urea processes. From the reactor the solution enters the medium pressure section and then the low pressure section. These two sections serve as carbamate decomposition steps with corresponding

carbamate cooler/condenser steps and ammonia recovery. The plant was designed with an ammonia tail gas scrubber but at present the scrubber is not in operation due to the danger of explosion because there is no catalytic reactor installed to remove the hydrogen from the tail gas. At present the tail gas, containing ammonia, is vented to the atmosphere. The ammonia vented with the tail gas is the equivalent to 3,000 mt/year of urea. The carbamate solution recovered from the carbamate condensers is recycled to the reactor. Urea solution from the low pressure section enters the evaporation section. The evaporation section consists of two stages of vacuum concentration evaporators that concentrate the urea solution into a urea melt. The urea melt leaving the second evaporator is pumped to the top of the prilling tower (one pump in operation and one on standby). The prilling device at the top of the prilling tower is a rotating cone-shaped perforated bucket. The prilling tower is of the natural draft type constructed of concrete. The urea prills are collected at the bottom of the prilling tower. A belt conveyor is used to transfer the prills to a bulk storage warehouse that is circular in shape and has a capacity of 2,500 mt.

Train 3 (Referred to as Unit 212)

Train 3 at the Fier Factory is similar to Train 2 with the exception that Train 3 has a slightly larger production capacity. The ammonia plant in Train 3 has a nameplate capacity of 212 mt/day and the urea plant has a nameplate capacity of 320 mt/day. Train 3 was also designed in China by the same firm that designed Train 2 in 1976. Besides being larger in production capacity, Train 3 incorporates several improvements compared with Train 2. These improvements are based on deficiencies or problem areas that were detected in Train 2 through the years. Train 3 was started up in 1991 but total operating time has been less than 6 months because of the lack of natural gas.

Environmental Assessment

An assessment of the environmental conditions of the Fier Factory was performed. The result of this assessment is the main focus of this report. The assessment examined the status of the Fier Factory facilities from an environmental point of view and recommended all the actions that should be taken to bring the plant facilities into compliance with current acceptable world standards for pollution control and environmental safety which would have

to be met for any new fertilizer facility in most countries in the world. Reference is made to the already mentioned "Technical and Economic Evaluation of the Fier Nitrogen Fertilizer Factory in Albania" study undertaken by IFDC in 1993, which lists a number of environmental issues. In this study, a detailed review of these issues was made and additional issues were considered.

The Fier Factory facilities can be upgraded and brought into compliance with current acceptable world environmental and safety standards. The original design of the units did not include adequate attention to environmental concerns and the units were designed for simplicity. However, with the addition of adequate pollution control and treatment facilities, the Fier Factory production units can be made environmentally safe. Additionally, the Fier Factory needs to adopt a different operating philosophy from that currently practiced at the facility. To meet the enhanced environmental and safety standards, it will also be necessary to institute proper operating and safety procedures together with methods to continuously monitor the procedures.

A stepwise investment program for the addition of effluent treatment facilities and environmental upgrades to the production units should be developed based on the availability of natural gas for the plants. It is not likely that both Trains 2 and 3 will be able to operate simultaneously in the near future. However, the stepwise investment program is proposed for consideration based on the expectation that by the year 2000 Albania will have sufficient natural gas either through increased domestic production and/or by the importation of natural gas from the former Soviet Union through a proposed international pipeline.

A Plan of Action

The various Fier Factory production units can be equipped with effluent treatment facilities and environmental upgrades to make the plants meet international standards typically applicable to new fertilizer facilities. This is, however, only one side of the problems faced by the Fier Factory. In addition to the fact that the plants have not been designed to achieve internationally acceptable effluent standards, the plants also show a lack of maintenance and adequate housekeeping caused by the shortage of spare parts and, of course, inadequate financial resources. Some effluent treatment facilities are simply not in

operation and some of the effluent collection systems are in very poor mechanical/operating condition.

The operating record of the plants in the past few years shows so many shutdowns and startups that it is virtually impossible to reconstruct or analyze the record on effluent treatment.

Natural gas fuel and feedstock will have to be made available to the Fier Factory on a continuous basis to allow the facility to operate in an environmentally sound and cost-efficient way. Frequent stops and starts of the production units have a disastrous effect on raw material consumption and the release of effluents. These are, however, problems that can be solved by operating the facilities on a continuous basis and by providing the Fier Factory with a comprehensive technical assistance program.

Based on the quantity of natural gas available to the Fier Factory considering a future increase in domestic production and/or pipeline importation from the former Soviet Union, it is recommended to implement a stepwise environmental investment program for the Fier Factory facilities. In summary, it is recommended that the following sequence of actions be implemented to make the operation of the Fier Factory environmentally acceptable. The rationale for this plan of action is described in more detail in the following sections.

Action 1

Provide local currency funding equivalent to about US $100,000 to $125,000 (maximum) to (1) repair the existing Fier Factory sewer systems, (2) repair and restore the operation of the existing wastewater effluent treatment system, (3) install facilities to collect waste oil from compressor and pumps (to prevent the oil from entering the sewer system and soil), (4) separate storm water drainage systems from process effluent drainage, (5) construct dikes around storage tanks, (6) establish a housekeeping program, (7) establish a safety program, and (8) start an employee environmental/safety awareness program led by the Fier Factory management. In addition to the environmental/safety awareness program, it is recommended that the Fier Factory implement an effective quality management program. Generally, this means showing evidence of compliance with ISO 9000

series standards. Such evidence (registration) of ISO 9000 compliance is currently not mandatory, but is becoming important for remaining competitive in a free market environment. All tasks mentioned in Action 1 can be carried out by the Fier Factory staff using their existing workforce and/or local contractors and resources. Action 1 should be implemented as soon as it is determined that the factory is likely to operate in the reasonably near future.

Action 2

Based on the amount of natural gas available to the Fier Factory after the Delvina natural gas wells have been treated (acid fracture stimulation), it is recommended to provide an estimated funding in the amount of US $4,210,000 (minus 0%, plus 25%, about $5.3 million maximum) to design, procure, and install the following pollution abatement equipment.

- A scrubber for process vents in the ammonium nitrate plant of Train 1.
- A nitrogen oxide (NO_x) abatement unit in the nitric acid plant from Train 1.
- A liquid additive injection unit (i.e., Galoryl®) for product conditioning in the ammonium nitrate plant of Train 1.
- A hydrogen removal unit in the urea unit of Train 3 to remove hydrogen from carbon dioxide (CO_2) feedstock fed to the urea unit.
- An ammonia process condensate treatment unit in the ammonia unit of Train 3.
- A process condensate treatment unit in the urea unit of Train 3 to treat urea process condensate from the urea units of Trains 2 and 3.
- A new flare system for burning hydrogen sulfide (H_2S) from the gas treatment unit that serves all three trains.

Action 3

Provide funding in the estimated amount of US $1,440,000 (minus 0%, plus 25%, about US $1.8 million maximum) to install the following pollution abatement equipment. Action 3 should only be implemented when sufficient natural gas is consistently available to the Fier Factory to operate Trains 2 and 3 at their minimum practical capacity.

- An ammonia process condensate treatment unit in the ammonia unit of Train 2.
- A silencer for the ammonia unit of Train 2.
- A hydrogen removal unit in the urea Train 2 to remove hydrogen from the CO_2 feedstock fed to the urea unit.

Implementation of the above plan of action will enable the Fier Factory to operate in compliance with current acceptable international standards for pollution control, environmental protection, and safety. In addition, the plant will become more efficient in the use of its resources, particularly natural gas fuel and feedstock.

Onsite Technical Assistance

Implementation of the above stepwise plan of action will require a major technical/ engineering and project management effort involving a number of international suppliers of equipment and services. Therefore, to facilitate a timely and cost-effective implementation of the environmental upgrading program, it is recommended that a resident consultant skilled in ammonia/urea production, environmental upgrading, procurement and contracting, and project management be assigned to the project and posted at the Fier Factory on a full-time basis for a period of about 2 years. The cost of the proposed resident consultant is not included in the investment cost described in this report because it is envisioned that the cost of the consultant would be funded by a donor such as USAID.

Discussion on Environmental Issues and Upgrades

General

The philosophy adopted for this environmental assessment is based on solving the problems at their source. This is the most effective way of solving the problems as it produces the best results (zero effluents) for the least long-term cost. Added benefits include the production of valuable recycle (recovered) products such as hydrogen, ammonia, and water.

Ammonia Units

Ammonia Unit, Train 1 – The ammonia unit of Train 1 was not considered in this assessment because this unit should not be operated. The ammonia unit of Train 1 (unit 210) should not be operated in the future because its production capacity is small (150 mt/year), it is quite old, and it is in a poor state of repair that will require a large investment to bring it into full operation. Additionally, the other two plants (Trains 2 and 3) produce ammonia in excess of the ammonia required for the urea plants. This excess ammonia can be used to produce nitric acid and ammonium nitrate in Train 1.

Ammonia Unit, Train 2 – The ammonia unit of Train 2 has been operated the most during the past 2 years and is in fairly good mechanical condition. The plant was designed without any treatment facilities for the process condensate. This is the main effluent source of this unit. The addition of a process condensate treatment unit is required to decrease the contaminants (mainly ammonia) in the effluent discharged from this unit to acceptable levels. Present ammonia plant designs include process condensate treatment systems, which recycle all the ammonia back to the process and produce an effluent stream which can be reused as boiler feed water (BFW). A zero effluent system for ammonia plant process condensate is the standard in new designs. Various condensate treatment facilities have been used successfully, and are therefore recommended. Several companies offer proprietary designs for these systems.

The cost of a complete installed condensate treatment unit for a 180 mt/day ammonia unit is estimated at US $1,250,000.

The installation of a vent silencer for the ammonia plant is also required to decrease noise during startup and upset conditions. The cost for a silencer is estimated at US $10,000.

Ammonia Unit, Train 3 – The ammonia unit of Train 3 has not been operated recently due to the lack of natural gas. This unit has a more efficient design than Train 2, but also lacks a process condensate treatment unit. The installation of a process condensate treatment unit as described above is required to decrease the plant effluent to the required level. No other significant corrective environmental actions are needed in this unit.

The cost of a complete installed condensate treatment unit for a 212 mt/day ammonia unit is estimated at US $1,380,000.

Urea Units

Urea Unit, Train 2 – The urea unit of Train 2 was designed without a hydrogen removal unit and without process condensate treatment facilities. Those facilities need to be provided to allow operation of the unit in an environmentally acceptable way.

The installation of the hydrogen removal unit will remove the hydrogen from the CO_2 feedstock and allow total scrubbing of the inert vent gases containing NH_3 in the decomposition and absorption stages of the process and thus decrease gaseous effluents to acceptable standards. The hydrogen removal unit would also eliminate the risk of hydrogen gas explosions, which is a major concern in units of this type.

It is recommended to route the process condensate from the urea unit of Train 2 to the urea unit of Train 3 for treatment and to return the recovered ammonia back from the urea unit of Train 3 to the urea unit of Train 2. This is recommended to minimize the investment cost by having only one treatment unit for both trains. Processwise, this approach is acceptable.

At the time of writing this report it was not clear if sufficient natural gas to operate both Train 2 and Train 3 would become available in the near future. Therefore, the investment for this unit is included in Action 3 of the action plan.

The cost of a complete installed hydrogen removal unit for a 265 mt/day urea unit is estimated at US $180,000. The cost of the process condensate treatment unit (US $1,750,000) is combined with the treatment unit for Train 3.

The exhaust air from the prilling tower in Train 2 does not require any treatment to meet acceptable industry standards. The prilling tower is of the natural draft type and is overdesigned for its actual operating capacity. The effluent from the prilling tower appears to be below what is achieved when scrubbing units are located on top of other induced or forced draft prilling towers operating at a higher throughput/air velocity. This is due to the low upward air velocity in the Fier Factory prilling tower relative to the urea prilling rate.

Urea Unit, Train 3 – The urea unit of Train 3 has basically the same design as the urea unit of Train 2 and requires the same corrective actions.

The addition of a hydrogen removal unit at the discharge of the CO_2 compression section is required to remove the hydrogen from the CO_2 feedstock fed to the urea plant. This would allow operation of the decomposition/absorption sections of the plant with total scrubbing of the inert vent gases for total removal of NH_3, resulting in significant savings in the ammonia feedstock requirements. It would also eliminate the risks of hydrogen explosions.

The installation of a process condensate treatment system consisting of a hydrolyser/desorber with overhead condenser is an absolute requirement to meet acceptable effluent standards. It is recommended to treat the process condensate from the urea unit of Train 2 and the urea unit of Train 3 in one common unit to be installed in the urea unit of Train 3. The urea unit of Train 3 already has a desorber unit which can easily be integrated into the new process condensate treatment facilities resulting in some cost savings. Processwise the treatment of the final effluent from the treatment section can be used as makeup water for low and medium pressure boiler systems.

The cost of a complete installed hydrogen removal unit for a 320 mt/day urea plant (Train 3) is estimated at US $200,000. The cost of a complete process condensate treatment system for a 585-mt/day (265 mt/day [Train 2] + 320 mt/day [Train 3]) urea plant, based

on hydrolyzing and desorption, and producing an effluent stream suitable for use as makeup water to medium pressure boiler systems, is estimated at US $1,750,000.

The exhaust air from the prilling tower for Train 3 does not require any treatment for the same reasons given for the prilling tower of urea unit, Train 2.

Nitric Acid Unit

Nitric Acid Unit, Train 1 – The Fier Factory has the intention to produce nitric acid and ammonium nitrate in order to consume excess ammonia available from the ammonia units of Trains 2 and 3. Presently the nitric acid plant operates with an exhaust tail gas containing in excess of 1,500 ppm NOx. The universal standard for NOx emissions is currently 200 ppm. The only way to bring the Fier Factory nitric acid plant in compliance with the industry standard is to install an NOx abatement unit. The nitric acid unit in the Fier Factory complex is 25 years old, and it is questionable if this unit should be operated in the future. Under the current situation, assuming full operation of the Train 2 and Train 3 ammonia plants, it will only have to be operated about 25% of the time to consume the excess ammonia produced in the ammonia plants of Train 2 and Train 3. The general mechanical condition of the nitric acid unit is not good, and a detailed check of this unit should be carried out during the proposed onsite technical assistance program. However, if it is the Fier Factory intention to operate this unit, the installation of the NOx abatement unit is an absolute must to meet the international standard for NOx emissions.

The cost of a complete NOx abatement unit (installed) for a 270 mt/day nitric acid (100% HNO_3 basis) unit with a present emission level of 1,500 ppm NOx is estimated at US $700,000.

Ammonium Nitrate, Train 1 – The Fier Factory also intends to operate the ammonium nitrate plant on an intermittent, as needed, basis to help consume the excess ammonia produced in Trains 2 and 3. This excess ammonia is first converted into nitric acid and then the nitric acid is neutralized with more ammonia and converted into solid ammonium nitrate. The general mechanical condition of the ammonium nitrate unit is very poor and this plant has reached the end of its useful life. It is not justified to revamp the ammonium nitrate unit because the cost for revamping will probably be very close to the

replacement cost for a new unit. At the same time it is not recommended to replace the ammonium nitrate unit with a new unit because it will only operate for about 25% of the time even at the full capacity of Train 2 and Train 3 (about 3 to 4 months per year). Therefore, if the ammonium nitrate unit has to be operated for a short period to consume the excess ammonia, it is recommended that the following pollution control equipment be installed: (1) a scrubbing system for the vent streams from the neutralizer and concentration sections and (2) a liquid additive injection system (i.e., Galoryl®) for product conditioning to eliminate dust emissions in the dry section of the plant and to avoid product deterioration, caking, and subsequent dust problems in the storage and bagging sections.

The cost for the installed scrubbing system for a 340 mt/day ammonium nitrate plant is estimated at US $100,000. The cost for an installed additive (dust abatement) injection system for a 340 mt/day ammonium nitrate plant is estimated at US $30,000.

Constraints to Closing Train 1

The total estimated cost to environmentally upgrade the nitric acid and ammonium nitrate units of Train 1 is US $0.83 million. However, these units will only have to operate between 1 and 3 months of the year to consume the excess ammonia produced in the ammonia/urea Train 2 and/or Train 3. At design capacity the Train 3 ammonia plant was producing about 7,700 mtpy excess ammonia not needed for the production of urea.

The amount of CO_2 produced in an ammonia plant is determined by the carbon content in the natural gas-based feedstock. Most ammonia plants, regardless of design, do not routinely produce enough CO_2 to be in balance with the amount of ammonia produced for the perfect balance required for producing urea. Alternatives to cope with the excess production of ammonia and therefore the unfavorable ammonia/CO_2 balance needed to produce only urea should be examined to find a way to eliminate the need for the Train 1 nitric acid and ammonium nitrate production units. Some of the possible alternatives for using the excess ammonia may include the (1) use of ammonia as fertilizer for direct application, (2) use of ammonia as an intermediate to prepare aqua ammonia for fertilizer and industrial uses, or (3) use of ammonia to produce more urea by supplementing the supply of CO_2. Alternatives 1 and 2 may have very limited application in Albania – at present, Albanian farmers do not use these practices; the equipment needed to apply

anhydrous ammonia or aqua ammonia does not exist in the country; and the procurement of such specialized equipment is relatively expensive. The third alternative, which is to use the excess ammonia to produce more urea, can only be accomplished if more CO_2 is made available. A possible additional source of CO_2 would be that included with the associated gas. The Fier Factory, as indicated earlier in this report, receives associated gas which contains up to 10%-12% CO_2 that has to be removed from the natural gas in the gas treatment section. The CO_2 removed from the associated gas together with other impurities is presently sent back to the gas fields via a pipeline. This CO_2 could be mixed with the CO_2 that is used as raw material in the urea plants. A drawback of this alternative is that the CO_2 separated from the associated gas contains H_2S and other minor impurities that would have to be removed from the CO_2 before using it for urea production. This alternative will have to be analyzed in more detail to determine the type and cost of equipment needed to purify the CO_2. A final alternative may be to import liquid CO_2 to supplement the supply of CO_2 fed to the urea synthesis process; this, however, would be extremely costly.

Other Units

Wastewater Treatment Facilities – The wastewater treatment system installed inside the Fier Factory facilities is basically a good system and it should be able to handle the effluent streams from the process units. The treatment system consists of an oil skimming unit, an anoxic unit, an aerobic unit, an anaerobic unit, and a settling unit. This facility is more than sufficient to control the effluent from the facilities at international acceptable standards. The facilities are in fairly good condition and should be put into operation as intended in the original design. The storm water runoff from the complex should be kept separate from the wastewater treatment plant and should be discharged independently.

Sewer System – Much of the sewer system inside the Fier Factory battery limits has collapsed, clogged, or is not functional. Process effluent streams and storm water runoff are also mixed with sewage, which causes overloading of the treatment system.

Chemical Water Sewers – These sewers should collect effluents from process units which are not contaminated with oil. These streams include treated process wastewater (if any), boiler blowdowns, and water treatment regeneration effluents.

As a first step in solving the pollution problems caused by the release of contaminated streams, the Fier Factory should start working on all the sewer and wastewater treatment systems mentioned above. The Fier Factory staff offered to provide technical details (drawings of the trenches, sewers, and drains) and cost estimates for performing this work, which could be started immediately and which would involve only local currency investments. In addition, adequate effluent monitoring procedures should be put in place, and special attention should be given to avoid accidental spills. A large holding pond for the effluent streams is not needed. The existing facilities have enough holding capacity to treat the effluent streams.

The cost of the work that needs to be done to keep the storm water runoff separate from the wastewater treatment facilities is included in the local cost component which is estimated at the equivalent of US $100,000.

H_2S Flare System – A new properly instrumented flare system for the associated gas treatment unit serving both ammonia plants will be required to ensure proper functioning of this important system.

The installed cost of such a system is estimated at US $50,000.

Housekeeping – The Fier Factory needs to establish an improved housekeeping program for the complex. This will improve the environment and the general appearance of the complex. Present conditions at the site are well below generally accepted standards.

General Maintenance – Most buildings, roads, and storage areas inside the complex lack maintenance, and the general appearance of the complex should be improved. This can and should be done with the current work force without the need for outside funding assistance.

Spent Arsenic Solution – The Fier Factory has about 600 m^3 of spent arsenic solution stored in onsite storage facilities. This solution was previously used in the CO_2 removal step in the Train 1 ammonia plant. This solution should be destroyed in an environmentally acceptable way as it presents a significant environmental hazard. In addition the storage

tanks are not diked, so in case of failure of one of the tanks the solution would be spilled over a very large area.

The first step to follow with respect to the disposal of the arsenic-containing solution is for the Fier Factory to contact the Giammarco-Vetrocoke company (process licensor of the process using arsenic as one of the chemicals used in the process to remove carbon dioxide) in Italy to determine what has been done by them when converting old plants using their arsenic process to newer processes that do not use such a hazardous chemical. The Giammarco-Vetrocoke company should be the entity to provide the proper recommendations on how to dispose of the spent arsenic-containing solution. IFDC has no knowledge of methods for the environmentally acceptable disposal of the arsenic-contaminated material. Historically, ocean and deep-well injection disposal methods have been used.

Storage Tanks – None of the large storage tanks (nitric acid and ammonia) onsite have dikes. A program should be established to equip all tanks, which store potentially dangerous chemicals, with dikes and catchment areas. This work should be done by the Fier Factory personnel or by local contractors using the local currency component of these estimates. Although there are not definite norms on the construction for dikes to be used as emergency secondary containment around tanks, there are several organizations that have published some guidelines on how these dikes should be constructed, mainly for ammonia storage. Some of the organizations that deal with these types of regulations in the United States are The Florida State Department of Environmental Regulations (Regulation 16-61), The Uniform State Fertilizer Bill, section 8(a) and 14, and the *On-Site Product Containment Guidelines for Fluid Fertilizers and Agrichemicals*, published by the Agricultural Retailers Association. In Appendix A some general guidelines are given for the design and operation of containment dikes.

The cost for constructing the dikes around the storage tanks at the Fier Factory is included in the Action 1 local cost component equivalent to US $100,000.

Effluent Standards

The following is a list of internationally accepted effluent standards for fertilizer complexes similar to the Fier Factory complex. It is essential to ensure that any effluent stream from the Fier Factory complex complies with these standards.

Effluent	Material/Property	Concentration in Effluent Stream
Process condensate from ammonia plant	Ammonia Methanol	5 ppm 5 ppm
Process condensate from urea plant	Ammonia Urea	5 ppm 5 ppm
Exhaust air from prilling towers	Urea or ammonium nitrate particulate	Below 40 mg/NM^3
Urea plant gaseous effluents	Ammonia	100 ppm
Ammonium nitrate plant gaseous effluents	Ammonia	100 ppm
Nitric acid plant gaseous effluents	Nitrogen oxides (NO_x)	200 ppm maximum
Liquid effluents from entire complex	Zinc Arsenic Free chlorine Ammonia Nitrate (NO_3^-) Nitrite (NO_2^-) Urea Biological oxygen demand (BOD) Chemical oxygen demand (COD) Oil Temperature pH	below 10 mg/L below 10 mg/L below .003 mg/L below 1 mg/L below 20 mg/L below 1 mg/L below 20 mg/L below 50 mg/L below 100 mg/L below 5 mg/L below 38°C 6-9

Engineering and Installation

Most of the effluent treatment facilities described in this report are normally included in the design of new facilities in order to meet international standards for effluent discharges from fertilizer complexes. It will be necessary to contact one or more international

contractors in the business to obtain the required engineering, equipment, and installation of the systems.

Possible, but not exclusive, contractors for these retrofits may include (1) Stamicarbon b.v. for any required changes in the urea plants, (2) M.W. Kellogg for any required changes in the ammonia plants, and (3) Weatherly Inc. for changes needed for the nitric acid and ammonium nitrate plants. As an alternative the total job could be given to an engineering company familiar with all the units. A company such as M.W. Kellogg Co., Udhe GmbH, or Haldor Topsoe A/S could most likely handle this type of work.

The cost estimates given in this report are -0%/ +25% and are inclusive of all engineering, procurement, and construction costs. **Table 1** summarizes these costs.

Natural Gas Supply Situation

Natural gas is produced in Albania from two origins: (1) natural gas from wells drilled into natural gas deposits, referred to as "dry gas" and (2) gas associated with petroleum, referred to as "associated gas." Associated gas is less pure than dry gas, containing up to 12% of unwanted impurities such as CO_2, sulfur compounds (mainly hydrogen sulfide [H_2S]), inert materials, and heavier hydrocarbons. The Fier Factory has the facilities to use either type of natural gas. The use of associated gas has three main drawbacks in the Fier Factory: first, before it can be used as process gas, it has to be purified at the plant, which not only decreases the volume by about 12% but also consumes energy in the form of steam and electric power; second, it creates operational problems mainly with the burners of some equipment; and third, the contaminants removed from the gas are burned and release pollutants to the atmosphere.

Information received by IFDC during the study performed in 1993 indicated that about 270,000 m^3/day of natural gas was produced in Albania. The IFDC team was informed that in September 1994 the production had declined to about 204,000 m^3/day; this represents a decrease of about 70,000 m^3/day in one and a half years. These production data confirm the decline that the country is continuing to experience with natural gas production.

According to information received from the Fier Factory personnel, the Albanian National Petroleum Enterprise (ALBPETROL) has spent this year (1994) about 500,000,000 Leks (about US $5.9 million) in exploration drilling without any positive results. The new wells drilled did not produce any gas. ALBPETROL has a limited budget for exploration because their main sources of income are from the sale of a very limited quantity of natural gas and refined petroleum products from its three refineries. Although the government of Albania (GOA) is well aware of the importance and need for operating the Fier Factory, it also has to consider several other industries. For this reason, in 1994 the Fier Factory signed a contract with ALBPETROL for the supply of 125,000 m^3/day of natural gas. This is the minimum amount required by the Fier Factory to operate one ammonia plant and one urea plant at 60% capacity, the minimum technical capacity of the units. Any natural gas supply below 125,000 m^3/day will force the Fier Factory to shut down. For several reasons ALBPETROL has not been able to fulfill their contract obligations during 1994. As a result, the Fier Factory has operated only a few days during 1994, as shown below:

Operating Days for the Fier Factory During the First 9 Months of 1994

Month	Ammonium Nitrate	Ammonia 211	Urea 212
	(days of operation)		
January		16	
February			
March	12	8	
April			
May			
June			
July			
August		14	
September[a]		13	9
Total	**12**	**51**	**9**

a. Through September 14, 1994.

As seen from the above, the Fier Factory has produced urea during only 9 days in 1994. During the 9 days of operation, the plant had to be intermittently shut down 10 times because of decreases in the flow of natural gas.

It is very difficult for any plant to operate under these conditions because the staff becomes demoralized, the consumption of raw materials and utilities is much higher than normal, and the equipment suffers damage due to mechanical and thermal stresses. The damage caused to the equipment due to thermal and mechanical stress may become apparent several months or even years later, causing maintenance to be more expensive and thus causing the production costs to increase. Thus, it is imperative to provide the Fier Factory with a constant supply of natural gas if the value of the plant investments are to be maintained.

In March 1993, IFDC representatives met with representatives of the Ministry of Industry, Mineral Resources, and Energy, ALBPETROL, and the Technological Institute for Oil and Gas, which is part of ALBPETROL. The purpose of the meeting was to find out how IFDC, with funding assistance from USAID, could help ALBPETROL in procuring more natural gas for the Fier Factory. During the meeting the Delvina region gas wells were discussed. The IFDC team was informed that the United States corporation Halliburton Manufacturing and Services, Ltd., which is well qualified in the technology of oil and gas production, had studied the Delvina wells. The reports of that study, made available to IFDC, indicated that Delvina wells number 4 and 12 can be acid fracture stimulated to increase their production. If this is carried out, the Fier Factory could receive more natural gas if other sources of natural gas can be maintained or increased.

In October 1993, IFDC engaged the Chevron Global Technology Services Company (Chevron) to confirm the possibility of acid fracture stimulation of the Delvina wells. Chevron submitted the report entitled "Delvina Gas/Condensate Field Study," which concluded that (1) acid fracture stimulation of the two Delvina wells is likely to provide about 120,000 Nm^3/day of natural gas for operation of the Fier Factory to meet the minimum gas demand of one ammonia/urea unit for up to 5 years based on Chevron estimates of the Delvina reserves (this is no longer true because of a major decline since 1993 in total natural gas production) and (2) the gas transmission pipeline can easily be

upgraded to accommodate the additional flow of natural gas from the Delvina field to the Fier Factory. Furthermore, based on the Chevron report findings, IFDC's calculations show that all of the work (acid fracture stimulation and pipeline repair) can be accomplished for a cost of about US $2.5-$3.0 million.

In September 1994, a meeting was held at the Fier Factory to discuss the plan of action if USAID provides the funding to help bring the Fier Factory into normal operation. Those present at the meeting were Mr. John A. Becker, USAID representative; Mr. Andon Dema, Director and Mr. Jani Sila, Chief Engineer, Fier Factory; and Dr. Ray B. Diamond, IFDC Chief of Party, Mr. J. Ramon Lazo de la Vega, IFDC specialist ammonia/urea, and Mr. Kees Oomen (IFDC consultant). Among other things, it was recommended during the meeting that the new natural gas contract with ALBPETROL should be negotiated in terms of the natural gas heating value and not the gas volume. At present the Fier Factory pays ALBPETROL for the natural gas by volume (on a normal cubic meter basis), making no distinction between pure dry natural gas or the less pure associated gas. Most ammonia/urea complexes in the world pay for natural gas based on the caloric (heating) content of the gas, usually expressed in British thermal units (Btu), or kilocalories per unit of volume. The Fier Factory not only pays the same price for both grades of natural gas but when it receives associated gas, it has to purify it, which represents extra costs in steam and electric power consumption.

By December 1994 the production of natural gas had reached catastrophically low levels in the country.[2] The Fier Factory, the major potential user of natural gas, had not operated since early October 1994 because of an insufficient supply of gas. It operated at minimum possible level with numerous interruptions during September and October, only because natural gas which normally is supplied to Ballsh refinery was supplied to the Fier Factory while the refinery was temporarily shut down. The continuing deterioration of natural gas production means that the Fier Factory, which is one of the few large enterprises in Albania that could operate economically, will not operate again until significant additional quantities of gas are made available. In the meantime, IFDC estimates that more than US $8 million in hard currency will be required to import nitrogen fertilizers during 1995.

---

[2]IFDC internal report entitled "Albania Gas Production Situation and Potential for Increasing Supply" prepared by R. B. Diamond, Chief of Party, IFDC-Albania, January 1995.

This amount of money (US $8 million) spent for new well drilling, acid fracture stimulation, and pipeline repair would most likely result in a supply of natural gas that would permit production at the Fier Factory of about twice the amount of nitrogen fertilizer that will be imported in 1995 alone.

The Technical Institute for Oil and Gas (ITNG), ALBPETROL, estimates that natural gas production in Albania for the period 1995-97 will be as follows unless new investments are made to increase production.

Type of Natural Gas and/or Source	1995	1996	1997
	(thousand m^3/day)		
Dry gas	50	20	0
Associated gas	45	40	35
Gas from Delvina region	28	25	22
Total	123	85	57

A total of about 75,000 m^3/day of natural gas is needed to supply current users (Ballsh refinery, small industries, and Patos and Kucova communities for household use). It is apparent that ALBPETROL will not be able to supply those needs after 1996 and that the Fier Factory will not be able to operate again until a considerable additional supply of natural gas is made available. The Fier Factory needs a constant supply of about 200,000 m^3/day to efficiently operate one ammonia-urea train.

Apparently the European Union (EU) is considering the possibility of connecting Albania with the national gas supply pipeline network originating in the former Soviet Union. Representatives of the National Committee for Energy said that connection could be possible by the year 2000 at an estimated cost of US $90 million for the main transmission pipeline. Another US $90 million would be needed for distribution, including US $30 million for repair of existing pipelines.

In summary, it appears that the most practical course of action that needs to be taken to allow the Fier Factory to operate on a continuous basis in the near future is to rework

the Delvina wells through acid fracture stimulation and drill at least one additional well in the Delvina field.

Production Costs

An update of the production costs of the Fier Factory was also carried out by the IFDC team while performing the environmental assessment. This update of the cost structure is critical to determine if, indeed, the Fier Factory has the potential to be financially attractive and be a viable candidate for privatization, assuming a reliable supply of natural gas, at market prices, is available. The cash costs for producing ammonia and urea were calculated using the raw materials and utilities costs as of September 1994. For this update, cash costs are defined as the production costs without considering depreciation or other financial costs, and considering the initial fixed investment as a sunk cost. In determining the production costs for ammonia and urea of the Fier Factory, the unit consumption of raw materials and the unit costs of other items required for the production units were determined. The information on the unit consumption was provided by the Fier Factory staff based on actual data taken while the units were in operation. The exchange rate used for the cash cost estimations is US $ = 95 Leks.

The cash costs for producing ammonia and urea were calculated for Trains 2 and 3, assuming that an ample supply of natural gas is available and that the units can operate at full capacity.

Train No. 2 (Unit 211) at 100% capacity (180 mtpd ammonia and 265 mtpd urea during 330 days/year) will have a production cost for ammonia of about US $142/mt and for bagged urea about US $130/mt assuming Train No. 3 is shut down. A breakdown of the production costs for Train 2 (Unit 211) is shown in **Table 2.**

Train 3 (Unit 212) at 100% capacity (212 mtpd ammonia and 320 mtpd urea during 330 days/year) will have a production cost for ammonia of about US $128/mt and for bagged urea about US $120/mt assuming Train No. 2 is shut down. A breakdown of the production costs for Train 3 (Unit 212) is shown in **Table 3.**

With both Trains 2 and 3 in operation at full capacity (392 mtpd ammonia and 585 mtpd urea during 330 days/year), the cash production cost of ammonia will be about US $121/mt and bagged urea will be about US $109/mt. The breakdown of this cost is shown in **Table 4.**

These costs do not include the financial costs of the new investments required for the environmental upgrading of the Fier Factory. Using the base case minimum investment of US $5.75 million for the environmental upgrades, as described in this report, a 10% annual interest rate, and a 15-year payback period, the production cost of urea would be increased an additional US $3.5-$5.8/mt as described in **Table 5.**

By mid-September 1994, the Fier Factory reported production costs in the order of 25,194 Leks (US $300) per metric ton of ammonia and 22,622 Leks (US $269) per metric ton of urea.[3] These high production costs are caused by the fact that the ammonia and urea plants have operated very few days during the year increasing the effect of the fixed costs. In addition, the plants have had many shutdowns and startups, mainly caused by lack of natural gas, which increase the unit consumptions of raw materials and utilities.

In 1993, IFDC calculated the cash costs of producing ammonia and urea. The costs calculated at that time for Train 3 (Unit 212) at 100% capacity showed a production cost for ammonia of US $90.1/mt and for urea of US $74.4/mt. Train 2 (Unit 211) at 100% capacity showed a production cost for ammonia of US $94.3/mt and for urea of US $76.9/mt. The difference in costs between 1993 and those shown in this report (1994) is due to the following: (1) the 1993 cash costs were calculated using an exchange rate of US $ = 110 Leks (1994 exchange rate is US $ = 95 Leks), (2) the natural gas price used in 1993 was 5.5 Leks/m^3 (in 1994 it was 6.3 Leks/m^3), and (3) the overall costs for utilities and salaries have increased because of the transition period from a socialist economy into a free market economy. It is important to notice that with the current international prices for ammonia and urea, the Fier Factory is still competitive and worth the investment that is required to restructure the units and at the same time increase the supply of natural gas so that at least one of the Fier Factory ammonia/urea trains can be operated at near its design capacity.

---

[3]Calculated using an exchange rate of US $ = 84 Leks, which was reportedly applicable in September 1994.

Table 1. Investment Required to Environmentally Upgrade the Fier Nitrogen Fertilizer Factory

	Investment[a] (US $ x 1,000)
Action 1	
■ Repair existing sewer systems	
■ Repair and restore the operation of the existing wastewater treatment system	
■ Install facilities to collect waste oil from compressors and pumps	
■ Separate storm water drainage systems from process effluent drainage systems	
■ Construct dikes around storage tanks	
■ Establish a housekeeping program	
■ Establish safety program	
■ Implement an environmental/safety awareness program	
Subtotal	100-125[b]
Action 2	
■ Procure and install the following pollution abatement equipment:	
• A nitrogen oxide abatement unit for the nitric acid plant of Train 1	700
• A scrubber for process vents in the ammonium nitrate plant of Train 1	100
• An additive injection unit in the ammonium nitrate plant of Train 1	30
• A hydrogen removal unit in urea unit of Train 3	200
• An ammonia process condensate treatment unit for ammonia unit of Train 3	1,380
• A process condensate treatment unit for urea units of Trains 2 and 3	1,750
• A new flare system for burning hydrogen sulfide (H_2S) from the gas treatment unit that serves all three trains	50
Subtotal	4,210 - 5,300
Action 3	
■ Procure and install the following pollution abatement equipment:	
• An ammonia process condensate treatment unit for the ammonia plant of Train 2	1,250
• A silencer for the ammonia unit of Train 2	10
• A hydrogen removal unit in urea unit of Train 2	180
Subtotal	1,440 - 1,800[c]
Total	5,750 - 7,225

a. Estimates are based on a minus 0% plus 25% accuracy. The larger values represent the plus 25% case which would be the maximum investment required to implement the project.
b. These funds should be provided in local currency to enable the Fier Factory to perform the tasks indicated in Action 1 using local resources.
c. This investment should be made only when sufficient natural gas is available to the Fier Factory to operate Trains 2 and 3.

Table 2. Ammonia and Urea Production Cost – Train 2 (Unit 211) at Full Capacity – Train 3 (Unit 212) Shutdown

Item	Unit Cost (Leks)	Consumption (per mt product)	Cost (Leks/mt)	Cost (US $/mt)[a]
Ammonia Production Cost (at 180 mtpd during 330 days/year producing 59,400 mtpy)				
Natural gas, m^3	6.30	1.173.60	7,393.68	
Electricity, kWh	2.00	1,107.10	2,214.20	
Boiler feed water, mt	203.00	3.67	745.01	
Steam, mt	1,250.00	0.00	0.00	
Industrial water, mt	3.00	18.06	54.18	
NaCl, kg	2.07	30.00	62.10	
K_2O, kg	8.60	0.40	3.44	
Amino acetic acid, kg	886.00	0.18	159.48	
Activated carbon, kg	147.00	0.12	17.64	
Catalyst			137.76	
Subtotal Variable Cost			**10,787.49**	**113.55**
Salaries			177.00	
Overhead			61.80	
Workshop/maintenance			1,286.00	
Other			1,180.00	
Subtotal Fixed Cost			**2,704.80**	**28.47**
Total Cash Cost			**13,492.29**	**142.02**
Urea Production Cost (at 265 mtpd during 330 days/year producing 87,450 mtpy)				
Ammonia, mt	13,492.29	0.60448	8,155.82	
Electricity, kWh	2.00	181.30	362.60	
Steam, mt	1,250.00	1.21	1,512.50	
Boiler feed water, mt	203.00	0.26	52.78	
Industrial water, mt	3.00	10.26	30.78	
Bags	25.00	26.13	653.25	
Chemicals			0.00	
Subtotal Variable Cost			**10,767.73**	**113.34**
Salaries			121.00	
Overhead			42.30	
Workshop/maintenance			791.00	
Other			604.00	
Subtotal Fixed Cost			**1,558.30**	**16.40**
Total Cash Cost			**12,326.03**	**129.74**

a. Assuming exchange rate of 1 US $ = 95.00 Leks.

Table 3. Ammonia and Urea Production Cost – Train 3 (Unit 212) at Full Capacity – Train 2 (Unit 211) Shutdown

Item	Unit Cost (Leks)	Consumption (per mt product)	Cost (Leks/mt)	Cost (US $/mt)[a]
Ammonia Production Cost (at 212 mtpd during 330 days/year producing 69,960 mtpy)				
Natural gas, m^3	6.30	1,100.00	6,930.00	
Electricity, kWh	2.00	970.00	1,940.00	
Boiler feed water, mt	203.00	2.80	568.40	
Steam, mt	1,250.00	0.00	0.00	
Industrial water mt	3.00	0.80	2.40	
NaCl, kg	2.07	30.00	62.10	
K_2O, kg	8.60	0.40	3.44	
Amino acetic acid, kg	886.00	0.18	159.48	
Activated carbon, kg	147.00	0.12	17.64	
Catalyst			137.76	
Subtotal Variable Cost			**9,821.22**	**103.38**
Salaries			150.00	
Overhead			52.50	
Workshop/maintenance			1,092.00	
Other			1,000.00	
Subtotal Fixed Cost			**2,294.50**	**24.15**
Total Cash Cost			**12,115.72**	**127.53**
Urea Production Cost (at 320 mtpd during 330 days/year producing 105,600 mtpy)				
Ammonia, mt	12,115.72	0.60500	7,330.01	
Electricity, kWh	2.00	206.60	413.20	
Steam, mt	1,250.00	1.30	1,625.00	
Boiler feed water, mt	203.00	0.10	20.30	
Industrial water, mt	3.00	13.20	39.60	
Bags	25.00	26.13	653.25	
Chemicals			0.00	
Subtotal Variable Cost			**10,081.36**	**106.12**
Salaries			100.00	
Overhead			35.00	
Workshop/maintenance			655.00	
Other			500.00	
Subtotal Fixed Cost			**1,290.00**	**13.58**
Total Cash Cost			**11,371.36**	**119.70**

a. Assuming exchange rate of 1 US $ = 95.00 Leks.

Table 4. Ammonia and Urea Production Cost – Trains 2 (Unit 211) and 3 (Unit 212) at 100% Capacity

Item	Unit Cost (Leks)	Consumption (per mt product)	Cost (Leks/mt)	Cost (US $/mt)[a]
Ammonia Pro duction Cost (at 392 mtpd during 330 days/year producing 129,360 mtpy)				
Natural gas, m^3	6.30	1,133.80	7,142.91	
Electricity, kWh	2.00	1,032.95	2,065.91	
Boiler feed water, mt	203.00	3.20	649.50	
Steam, mt	1,250.00	0.00	0.00	
Industrial water, mt	3.00	8.73	26.18	
NaCl, kg	2.07	30.00	62.10	
K_2O, kg	8.60	0.40	3.44	
Amino acetic acid, kg	886.00	0.18	159.48	
Activated carbon, kg	147.00	0.12	17.64	
Catalyst			137.76	
Subtotal Variable Cost			**10,264.92**	**108.05**
Salaries			81.12	
Overhead			28.39	
Workshop/maintenance			590.57	
Other			540.82	
Subtotal Fixed Cost			**1,240.90**	**13.06**
Total Cash Cost			**11,505.82**	**121.11**
Urea Production Cost (at 585 mtpd during 330 days/year producing 193,050 mtpy)				
Ammonia, mt	11,505.82	0.60476	6,958.31	
Electricity, kWh	2.00	195.14	390.28	
Steam, mt	1,250.00	1.26	1,574.04	
Boiler feed water, mt	203.00	0.17	35.01	
Industrial water, mt	3.00	11.87	35.60	
Bags	25.00	26.13	653.25	
Chemicals			0.00	
Subtotal Variable Cost			**9,646.49**	**101.54**
Salaries			54.70	
Overhead			19.15	
Workshop/maintenance			358.29	
Other			273.50	
Subtotal Fixed Cost			**705.64**	**7.43**
Total Cash Cost			**10,352.14**	**108.97**

a. Assuming exchange rate of 1 US $ = 95.00 Leks.

Table 5. Urea Production Cost Summary – With and Without the Cost of the Proposed Environmental Upgrades

Train No.	Urea Production (Design Capacity)	Production Cost of Bagged Urea		
		Without Capital Recovery	Capital Recovery	Total Cost With Capital Recovery
	(mtpy)	(US $/mt)		
2 (Unit 211)	87,450	129.7[a]	5.8[b]	135.5[b]
3 (Unit 212)	105,600	119.7[a]	5.6[b]	125.3[b]
2 & 3 (Units 211 & 212)	193,050	108.9[a]	3.5[b]	112.4[b]

a. These production costs do not include any financial costs; the initial fixed investment is viewed as a sunk cost.

b. These total production costs include fixed capital recovery, for the new base case investment (US $5.75 million) required to upgrade the Fier Factory to comply with internationally accepted environmental standards. A 10% annual interest rate and a 15-year payback period is assumed. The capital recovery charge would be about 25% less if the upgrading is limited only to Train 3.

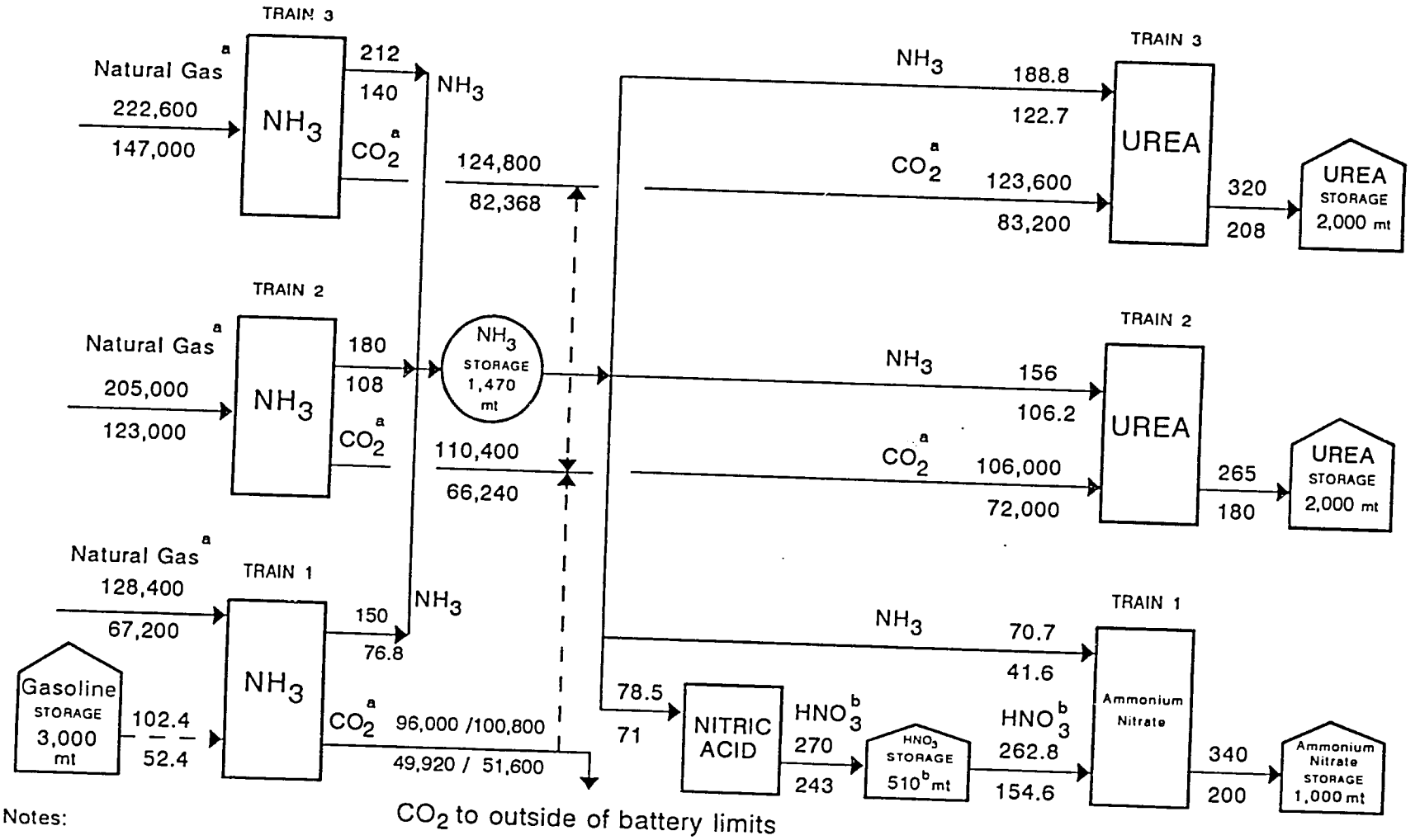

Notes:

- Numbers above lines are maximum daily capacities, while numbers below are minimum daily capacities
- Unless otherwise indicated, all figures are in metric tons of material per day.
- a: Expressed in normal cubic meters per day.
- b: Expressed as metric tons of 100% HNO3.

Figure 1. Capacities of Different Units.

45

Appendix A

General Guidelines for Design and Operation of Containment Dikes

1. Dikes are built around one or several tanks containing similar liquids which will not react with each other.

2. The capacity of the containment "pool" created by the dike should be large enough to hold the total contents of the largest tank within the dike plus a safety excess margin for storm water. In many cases this margin is equivalent to 10% to 25% of the capacity of the largest tank within the dike. Some dikes are designed to hold the contents of all the tanks within the diked area plus the previously mentioned excess margin.

3. The surface of the dike walls and of the floor of the pool should be constructed of a material impervious to and compatible with the liquids in the tanks within the dike.

4. Any piping or other structure within a dike should be built of materials compatible with the liquids in the tanks within the dike.

5. Provisions should be made to recover or collect any spilled material that accumulates in the pool of the dike.

6. Provisions should be made to allow personnel working within a dike to exit the diked area from any side in case of an unexpected emergency.

7. Entrance to a diked area should be restricted and controlled so that personnel entering have the necessary safety gear prescribed for the contents of the tanks.