PN-ABU-403 8.117
93803

FINAL REPORT

Covering Period: 1:vi:89 to 31:xii:93
(Subsuming all outstanding reports)

Submitted to:

THE OFFICE OF THE SCIENCE ADVISOR U.S. AGENCY
FOR
INTERNATIONAL DEVELOPMENT

The Development of Recombinant DNA Techniques for a Vesicular-Arbuscular Mycorrhizal (VAM) System.

Principal Investigator: Dr. Richard B.G. Dales
Grantee Institution: The University of The West Indies.
Cave Hill Campus, P. O. Box 64.
Bridgetown, Barbados.

Collaborators: Professor William E. Timberlake & Dr. Meg Marshall.
Institution: Department of Genetics, The University of Georgia,
Athens, Georgia 30602, U.S.A.

Project Number: 8.117
Grant Number: 534-0936-G-00-9118

A.I.D. Grant Project Officer: Dr. M. Rechcigl

Project Duration: 1:vi:89 to 31:xii:92, extended to 31:xii:93.

REC'D IN R&D/R
MAR 27 1995

CC: BOST LD

Table of Contents:

Executive Summary 1

Research Objectives 2

Methods and Results 6

Impact, Relevance and Technology Transfer 22

Project Activities/Output 23

a. Meetings attended 23
b. Conference presentations 24
c. Refereed or edited publications 25
d. Published abstracts 25
e. Theses 26
f. DNA database submissions 26
g. Patents 26
h. Training 26

Project Productivity 27

Future Work 28

Literature Cited 29

Appendices 31

I. Persad-Chinnery, S.B., Chinnery, L.E. and Dales, R.B.G. (1992) Enhancement of *in vitro* spore germination of *Gigaspora rosea* by a cellulase preparation. *Mycological Research* 96, 626 - 628.

II. Persad-Chinnery, S.B., Dales, R.B.G. and Chinnery, L.E. (1992) Do pesticide use and farming practices reduce the agronomic benefits of vesicular-arbuscular (VA) mycorrhizal fungi in Barbados? In *Proceedings of the Tenth Annual Conference of the Barbados Society of Technologists in Agriculture*. pp. 43 - 55. Ed. H. De Boer. BSTA.

III. Persad-Chinnery, S.B. and Dales, R.B.G. (1993) Developing a gene transfer system for vesicular-arbuscular (VA) mycorrhizal fungi of the genus *Gigaspora* (Zygomycetes, Glomales). In *Proceedings of the Third Caribbean Biotechnology Conference*. pp. 69 - 74. Ed. S. Laurent. UNESCO Sub-Regional Office for Science and Technology for the Caribbean, Port-of-Spain, Trinidad and Tobago.

IV. Waterman, L.D. and Dales, R.B.G. (1993) Protoplast isolation and amplification of ribosomal DNA from VAM fungi of the genus *Gigaspora*. In *Proceedings of the Third Caribbean Biotechnology Conference*. pp. 75 - 81. Ed. S. Laurent. UNESCO Sub-Regional Office for Science and Technology for the Caribbean, Port-of-Spain, Trinidad and Tobago.

A

Executive Summary:

The purpose of this project was to develop the capability for genetically-engineering fungi that beneficially colonise plant roots. This would engender the potential for manipulating plant growth by surrogately modifying the fungal symbiont using recombinant DNA technology. Despite nearly a century of research, virtually nothing is known of the biology of these vesicular-arbuscular mycorrhizal fungi and much of the work in this project was towards a basic understanding of these microorganisms. Six sub-projects were initially defined, of which four have been completed, while a significant amount of research has been conducted in the other two.

The project ran from June 1, 1989 to December 31, 1993. Initial funding arrived August 22, 1989 and subsequently, financial reports have been submitted by the Bursary, U.W.I. The project has funded the purchase of equipment items, such as a Beckman L8-70M ultracentrifuge, a Precision GTC-2 thermocycler and an NEC laptop computer. Two graduate students have worked on the project, with one being funded from the grant. Both students have now successfully completed their Ph.D. degrees. The U.S. collaborators made two visits to Barbados and both graduate students and the Principal Investigator undertook training in Prof. Timberlake's laboratory. The quality of assistance provided by the U.S. collaborators was exemplary and was instrumental in focussing the project goals, in accessing additional expertise and services at the University of Georgia, in providing technical assistance and in promoting the upgrading of our facilities at U.W.I.

The project was extremely valuable for the Department of Biology, U.W.I. in terms of the acquisition of technical expertise, particularly in modern biotechnological methodologies, including DNA handling, amplification, sequencing and analysis. Although the ultimate goal of developing gene transfer capability for a VA mycorrhizal fungus has not yet been realised, a vast amount of highly-significant, background research has been successfully completed. This project has extensively increased the understanding of VA mycorrhizal fungi and the future direction for the eventual completion of this project has been designed. To date, results obtained have been disseminated in 12 conference presentations, four refereed or edited publications, three GenBank DNA sequence submissions, and two Ph.D. theses. A number of further publications in refereed journals is anticipated.

Research Objectives:

This project was conducted to develop gene transfer technology for species of the genus *Gigaspora*. This is one of six zygomycete genera of vesicular-arbuscular mycorrhizal (VA mycorrhizal or VAM) fungi that colonise plant roots forming mutualistic symbioses. These fungi are considered to be extremely beneficial to their host plants, especially in poor, marginal and unfertilised soils. Consequently, the vast majority of research on VA mycorrhizae has concentrated on those benefits that plants can accrue from the fungal symbiont. The ability to genetically manipulate the fungal component could conceivably lead to further improved growth characteristics of the host plant. Such surrogate transformation systems would be highly innovative and have now been developed with other symbioses (e.g. Murray *et al.*, 1992). Despite approximately 100 years of VA mycorrhizal research, however, there is still virtually no understanding of the biology of the fungal component species. Consequently, this proposed development of a transformation system for a VA mycorrhizal fungus required fundamental research in a number of sub-project areas designated Specific Objectives 1 to 6 outlined below:

Specific Objective: 1. **To develop methods for the routine production of non-contaminated VAM fungal hyphae.**

It is not possible to culture VA mycorrhizal fungi in the absence of plant roots. Consequently, it is necessary to use methods that allow mycorrhizal growth, which are not contaminated with other microorganisms, if workable amounts of VA mycorrhizal fungal material are to be generated. Several approaches to this problem were tried, from germinating VAM fungal spores through to attempts to generate axenic VA mycorrhizas with *Agrobacterium rhizogenes* proliferated root organ cultures. This work was not innovative but just sought to determine the optimal approach from previously published methods.

Specific Objective: 2. **To establish enzyme systems and conditions for efficient protoplast release from VAM fungal hyphae.**

Protoplast technology can be an easy approach to gene transfer and genetic analysis due to ease of preparation of protoplasts and of reversion to cellular forms in some fungi. Exchange of genetic material between protoplasts of somatically or sexually incompatible fungi can be accomplished in a similar manner to sexual breeding. Application of protoplast technology could contribute significantly to increasing knowledge of the genetics of VA mycorrhizal fungi as conventional methods of genetic analysis by recombination studies is not possible. Protoplasts might be useful for transformation of VA mycorrhizal fungi and transformation may allow localised expression of beneficial genes in plant roots. The development of protoplast technology has not been reported previously for any species of VA mycorrhizal fungus.

Specific Objective: 3. **To investigate the nuclear division cycle in VA mycorrhizas.**

The purpose of this study was to identify events of mitosis in the VA mycorrhizal fungi, *G. decipiens* and *G. rosea*. This information is necessary, to choose an appropriate stage of the lifecycle of *Gigaspora* that could be targeted for transformation. The stage chosen must be one where mitosis occurs so that foreign DNA introduced via transformation is likely to integrate and segregate to daughter cells, thereby perpetuating the introduced DNA. Dividing nuclei are likely to be a prerequisite for successful transformation (Timberlake *pers. comm.*). There are no known reports of the process of nuclear division in VA mycorrhizal fungi and the occurrence of DNA synthesis in preinfection hyphae after spore germination is unresolved.

Nuclei and nuclear events are usually difficult to study in fungi due to the small size of the nuclei (usually less than 3 μm in diameter), with limited visible chromosome condensation (e.g. *Saccharomyces*) and little differentiation of the chromatin into euchromatin and heterochromatin (Mauseth, 1991). These problems are compounded by the coenocytic state of many fungal cells and the occurrence of processes

in fungal mitosis that differ from those of what could be considered "classical mitosis" exemplified by the somatic nuclear division in higher eukaryotes like the angiosperms. Although fungal mitosis has the same result as classical mitosis, that is the separation of replicated chromosomes to opposite poles of the spindle microtubules, the events leading to this outcome vary considerably. During fungal mitosis the spindle microtubules are commonly formed intranuclearly and the nucleolus may persist during nuclear division (Sansome, 1989).

Zygomycetous fungal hyphae, which includes VA mycorrhizal fungal hyphae, are profusely branched, thick walled and coenocytic with numerous minute nuclei (Atkinson, 1918). Robinow (1957ab) conducted studies on the nuclear cytology of some members of the Mucorales - Zygomycetes (e.g. *Rhizopus*, *Mucor*, *Phycomyces*) and observed that vegetative nuclei were of variable shapes. Examination of nuclei from vegetative hyphae fixed with acetic acid-alcohol and stained with acid fuchsin, acetocarmine or HCl-Giemsa showed nuclei were commonly round, oval or pyriform and elongated clavate nuclei were less common. As no distinct changes through interphase to metaphase were observed, possibly due to the staining methods used, mitosis could only be described in terms of changes in nuclear shape. Nuclei about to enter division were recognized by their increased size and the relatively long distance separating them from other non-dividing nuclei. Nuclear division was accomplished in 2-4 min for *Mucor hiemalis* and *M. fragilis* and was described as "nuclear elongation followed by constriction at the centre." Nucleoli also divided by elongation and constriction. Nuclear division in these zygomycetous fungi takes place within an intact nuclear envelope and the microtubules initially develop at one end of the elongated nucleus (McCully and Robinow, 1973).

Specific Objective: 4. **To isolate genomic DNA from VAM fungal hyphae or protoplast suspensions.**

A range of published DNA isolation protocols were assessed for their usefulness in liberating genomic DNA samples from species of *Gigaspora*. DNA isolation was a pre-requisite for transformation vector development, promoter isolation and polymerase chain reaction (PCR) amplification studies conducted under specific objectives 5 and 6.

Specific Objective: 5. **To develop gene transfer technology for a VAM fungus of the genus *Gigaspora*.**

The development of a transformation system for *Gigaspora* would allow the introduction of genes from both plant and microbial sources to be introduced into the fungus that may lead to a better understanding of the VA mycorrhizal symbiosis at a molecular level. There are several candidate genes that could be introduced into the fungus should a transformation system be developed, such as genes encoding the production of phytohormones that stimulate root and mycorrhizal development. Harley and Smith (1983) reported that IAA (indoleacetic acid) promotes root growth and enhances mycorrhizal symbiosis. It can be speculated that the introduction of a gene encoding IAA production into VA mycorrhizal fungi may lead to further understanding of the role of phytohormones in mycorrhizal formation and function. One can further speculate that genes for substances repellent to soil insects or nematodes could be introduced into VA mycorrhizal fungi. These transformed fungi could be used to reduce the cost of pesticide input in agriculture. Similarly, genes for more efficient absorption and translocation of nutrients from the soil to the plant would greatly increase the importance of VA mycorrhizal fungi as biofertilisers. For example, genes encoding enzymes such as phosphatase or nitrate reductase, could influence nutrient availability or alleviate various edaphic stress factors. Additional genes of agricultural importance are those encoding proteins involved with plant osmotolerance, plant disease resistance and plant resistance to pesticides. The advantage of introducing these genes into the fungus is that the plants could possibly benefit without being subjected to bioengineering themselves. Transgenic VA mycorrhizal fungal inocula may effectively substitute for fertilizers and/or pesticide inputs in agriculture. However, the ultimate goal should be to develop improved fungal strains for use as inocula in agriculture.

Another advantage of introducing genes into VA mycorrhizal fungi is that genes for root related functions can be restricted to expression by the fungus. Thus the plant benefits from the gene product without the gene being present in the plant genome. This is obviously a more desirable situation since

in many parts of the world genetic manipulation of food plants is viewed with suspicion by most consumers.

Through the development of a transformation system for VA mycorrhizal fungi it may be possible to develop a means of growing these organisms in pure culture without the loss of any mycorrhizal function or traits.

There is likely to be inexhaustible scope for research should a transformation system for VA mycorrhizal fungi develop. However, in considering strategies to improve symbiosis it will be important to avoid non-target effects that could disrupt the balance among rhizosphere components. The general intention of the research should be to optimise the plant-fungus symbiosis through genetic manipulation of the fungal component without impairment of the components of the rhizosphere ecology that may be supportive to that symbiosis.

Specific Objective: 6. **To utilise the Polymerase Chain Reaction (PCR) for identifying and monitoring VAM fungal DNA.**

In fungi and other eukaryotes, genes for nuclear large, nuclear small and 5.8S rRNA are organised as a tandemly arranged head-to-tail array (nuclear small—5.8S—nuclear large), repeated typically around 100 times along the length of a single chromosome (Schweizer *et al.*, 1969; Free *et al.*, 1979; Barnitz *et al.*, 1982). Repeat units are separated by nontranscribed spacers (NTS), while internal transcribed spacer (ITS) sequences separate genes. Each unit is transcribed as an intact precursor which is processed into mature nuclear small, 5.8S and nuclear large rRNAs. Selection of a region of rDNA for analysis depends on the taxonomic level of interest as segments evolve at different rates. Comparative analysis of sequences within nuclear small rDNAs has been routinely used for phylogenetic and taxonomic evaluation mainly above the genus level as this molecule gives good resolution at these levels and sequences of nuclear small rDNA subunits from many organisms are available for comparison (Van de Peer *et al.*, 1992; Ward *et al.*, 1992). Spacers are noncoding sequences that are not conserved. They provide areas for examination of recent evolutionary divergence between or within species (White *et al.*, 1990; Metzenberg, 1991). Intraspecific variation of ITS sequences is usually fairly low (3 to 5%) between closely related fungal species, but high between distantly related species and between related genera (Gardes *et al.*, 1991; Mitchell *et al.*, 1992; Egger and Sigler, 1993). O'Donnell (1992), however, found significant (4.6 to 14.3%) variation between ITS sequences of *Fusarium sambucinum* isolates. Analysis of ITS sequences for taxonomic and phylogenetic studies is now becoming more frequent and the quantity of sequence data available for this region has increased considerably (Baura *et al.*, 1992; Carbone and Kohn, 1993).

Sequence information can be derived from rRNA or rDNA by direct methods or indirectly by cloning the molecules into a vector before sequencing. Direct sequencing of rRNA may be hindered by the thermal stability of ribonucleases, difficulty in isolating good quality rRNA and the inability of reverse transcriptase to transcribe regions of strong secondary structure (Embly, 1991). As rRNA sequencing provides information from only one nucleic acid strand it is impossible to resolve ambiguities by comparison with the opposite strand. Also, post-transcriptional editing of rRNA in some organisms means that sequences of functional rRNA molecules may not be accurate reproductions of gene sequences (Bruns *et al.*, 1991). In contrast, sequencing of rDNA may be preferred because of the greater ease of DNA isolation and of sequencing both DNA strands, where necessary. Nucleotide sequence analysis has been simplified by application of the polymerase chain reaction (PCR), either for direct amplification and sequencing of DNA fragments or for amplification of DNA fragments to be subsequently cloned and sequenced.

The polymerase chain reaction is a biochemical method for greatly increasing the quantity of a specific nucleic acid sequence of DNA or RNA over its original concentration and over the concentration of other nucleic acids present in the reaction (Saiki *et al.*, 1985; Mullis *et al.*, 1986; Saiki *et al.*, 1986). PCR requires several components in reaction mixtures: (1) target sequence, (2) two oligonucleotide primers significantly complementary to ends of the target sequence on opposite strands designed so that their 3′ ends point toward each other along the intervening sequence, (3) DNA polymerase catalysing 5′→3′ extension of primers, and (4) appropriate concentrations of dNTPs and a divalent cation (usually Mg^{2+}). Buffered reactants are mixed, usually overlaid with mineral oil to prevent evaporation and

subjected to repeated thermal cycling consisting of 90 to 99 °C for separation of double stranded DNA into single strands, and 30 to 75 °C for annealing of primers to single stranded templates and synthesis of new strands by primer extension.

After the first cycle of denaturation, primer annealing and primer extension, new fragments of undetermined length are created, if the desired fragment is part of a longer molecule. These fragments provide at least half of the templates in the next cycle. In the following cycles, fragments containing target regions accumulate as their lengths are limited by the spacing of primers along newly formed templates. Concentration of short fragments increases almost exponentially while concentration of other fragments increases linearly, so that the target regions eventually form the detectable products when cycling ends. Originally, DNA polymerase I was used but thermostable DNA polymerases are now used, which avoid the repeated addition of enzyme. As thermostable polymerases have temperature optima near 70 °C, three stage thermal cycles consisting of separate annealing and extension temperatures are used where primer-template annealing occurs at a lower temperature than primer extension. Advantages of PCR include the specificity of amplification even of a single copy target sequence in a nuclear genome and the fact that minute quantities of template are required (Bej *et al.*, 1991).

Since PCR was first described, the technique has been modified in a number of ways. In one example, primer concentrations in reaction mixes may be altered so that the end product is single-stranded DNA. Production of single-stranded DNA by PCR utilises unequal, or asymmetric, primer concentrations so that initial cycles produce double stranded DNA (dsDNA), but as the low-concentration primer becomes depleted, further cycles entail annealing and extension of the high-concentration primer to generate an excess of one strand, which can then be sequenced using the complementary PCR primer (Gyllensten and Erlich, 1988; McCabe, 1990). Appropriate concentrations of dideoxynucleotides may be included in PCR mixtures for direct sequencing of PCR products (Engelke *et al.*, 1988; Ruano and Kidd, 1991). The design of the 5′ ends of primers can facilitate cloning of PCR products (Scharf, 1990).

Species identification of VA mycorrhizal fungi by standard methods can be difficult for untrained persons and involves characteristics of spores that are usually produced outside of the host plant. Molecular approaches to species identification would allow the monitoring of VA mycorrhizal fungi through all stages of the life cycle and in the field. Such capability would be essential for monitoring the progress of genetically-altered fungi. Comparative analysis of nuclear rDNA sequences can provide information for use in analysis of phylogenetic and taxonomic relationships of organisms. Investigations were aimed at determining whether rDNA regions of the VA mycorrhizal fungus *G. margarita* could provide sufficient information for design of PCR primers for species identification. The genus *Gigaspora* was chosen as there are only six recognised species, their morphological characteristics are well defined, and a local isolate of a VA mycorrhizal fungus identified as *G. margarita* was available for study. Sequences selected for evaluation were the internal transcribed spacers flanking the 5.8S rRNA gene, as sequence divergence in the ITS may be adequate for identification of individual species and generalised PCR primers for amplification of these regions from fungi have been defined (White *et al.*, 1990). These primers are complementary to conserved regions of nuclear small, 5.8S and nuclear large rRNA genes (Figure 1) and allow amplification of the 5.8S rRNA gene and flanking internal transcribed spacers, ITSA and ITSB.

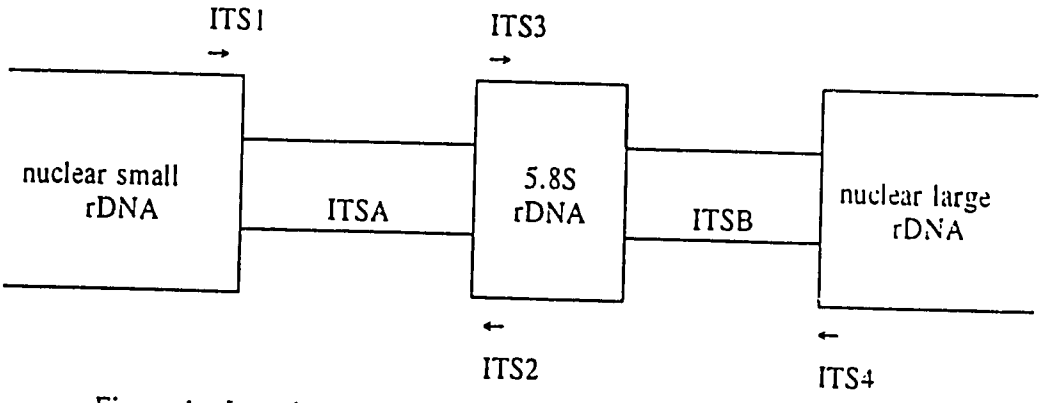

Figure 1. Locations of PCR Primers on Nuclear rDNA

Arrowheads represent 3′ ends of primers. Diagram not to scale.

Primer pairs ITS1+ITS2 are used for amplification of ITSA, primers ITS3+ITS4 for amplification of the 5.8S rRNA gene and ITSB, and primers ITS1+ITS4 for amplification of both spacers and the 5.8S rRNA gene. The sequence of primer ITS2 is complementary to that of ITS3.

The whole project was additionally supported by the University of the West Indies, which organised laboratory upgrading and facilitated some travel and training components. Aspects of travel, training and conference attendance were also supported by the U.S. Board on Science and Technology for International Development (BOSTID).

Methods and Results:

Specific Objective: 1. **To develop methods for the routine production of non-contaminated VAM fungal hyphae.**

a. *In vitro* VA mycorrhizal spore germination.

Germination represents a crucial phase of the VA mycorrhizal fungus lifecycle since an association with host roots must soon follow to ensure prolonged survival of the fungal symbiont. Spores of *G. decipiens* and *G. rosea* used in the following germination experiments were obtained from INVAM, Florida and extracted from separate mature pot cultures. Spores were extracted from the potting mix by wet sieving and decanting followed by sucrose centrifugation. The spores were surface-decontaminated in 5 % (w/v) Chloramine T.

i. Determination of the effects of selected enzymes on spore germination: Chitinase (1.0 units ml^{-1}) prepared from *Serratia marcescens* (Sigma), pectinase (6.9 units ml^{-1}) from *Aspergillus niger* (Sigma), α-glucanase (3.1 units ml^{-1}) from *Saccharomyces* (Sigma), hemicellulase (0.22 units ml^{-1}) from *A. niger* (Sigma) and cellulase (3.2 units ml^{-1}) from *Trichoderma reesei* (Sigma) were used at a concentration of 1 mg ml^{-1} (1 mg ml^{-1} of each enzyme was equivalent to its units ml^{-1} stated above) and filter-sterilised (0.22 μm pore size). Aliquots of 1.0 ml of each enzyme concentration, or sterile distilled water, were separately dispensed into the 3.4 ml wells of sterile multiwell dishes (Nunclon Multidishes, Nunc, Denmark) with each well containing a surface-decontaminated spore of *G. rosea*. The five enzyme treatments and the control were randomly assigned to different positions within an incubator set at 28 °C. Each multiwell dish represented a particular enzyme treatment or the control. In each dish 20 wells were used giving a total of 20 spores for each treatment and the control. The dishes were sealed with parafilm. The spores were examined daily for 30 d using a binocular microscope (Wild Heerbrugge type 352873) at x100 magnification.

A spore was considered to have begun germination if a hyphal protrusion, other than the residual hyphal attachment, emerged through the spore wall. Germination was considered established if a germtube hypha had grown to a length of 5 mm. No spores germinated in the chitinase, pectinase, α-glucanase or hemicellulase solutions. A maximum of 85 % of *G. rosea* spores (17 out of 20 spores) germinated in 3.2 units ml^{-1} cellulase from *Trichoderma reesei* after 14 d.

ii. Determination of the effects of different concentrations of cellulase from *T. reesei* on spore germination: These experiments were done to test the repeatability of the observation obtained with cellulase in the previous experiment, to determine if different concentrations of cellulase would also elicit germination and to determine if cellulase would promote germination with another species of *Gigaspora*. The design of these experiments, the results obtained, the statistical analyses of the data, and a discussion of the possible causes have been published (Persad-Chinnery *et al*, 1992). A copy of this paper is included as Appendix I. Whatever the cause of enhanced *Gigaspora* spore germination by cellulase at 3.2 units ml^{-1}, it is an interesting and consistent observation and is now routinely used in our laboratory for *in vitro* spore germination.

b. Production of axenic extraradical hyphae of VA mycorrhizal fungi

i. Regrowth hyphae of VA mycorrhizal fungi from colonised roots: In this experiment production of aseptic extraradical hyphae from leek roots colonised in pot cultures by *G. decipiens* and *G. rosea* was investigated. Samples of roots from pot cultures containing leek plants colonised with *G. decipiens* or *G. rosea* were removed and stained with chlorazol black E for presence of VA mycorrhizal fungi. Further root samples were taken from pot cultures in which mycorrhizal colonisation was greatest, gently washed in tap water, then in distilled water and surface decontaminated in chloramine T solution (50 g l^{-1}) containing 0.05% Tween 80 for 5 minutes or 10% commercial bleach (Klene™) for 1, 2 or 4 minutes. Roots were rinsed three times in sterile NaCl solution (10 g l^{-1}) containing 0.05% Tween 80, once in sterile distilled water and cut into 1 cm lengths. Terminal 5 mm lengths of root tips were discarded as these were unlikely to have been colonised.

Bovine serum albumin (BSA) (20 g l^{-1}) containing penicillin and streptomycin (500 μg ml^{-1} each) was prepared, filter sterilised and 0.75 ml aliquots were dispensed into wells of 24-well tissue culture dishes (Bellco Biotechnology). Surface decontaminated roots extracted from pot cultures were incubated in this medium. One or two root pieces were placed in each well of the multiwell dishes and dishes were sealed with parafilm. About 200 root pieces in total were used in this experiment. Dishes were sealed with parafilm, incubated at 28 °C in the dark and inspected daily under a dissecting microscope.

Colonisation rates of roots from pot cultures were low. About 50% of the roots stained and examined did not show intraradical hyphae and arbuscules characteristic of VA mycorrhizal fungi. At least 33% of root pieces treated with liquid bleach solution became contaminated with fungi by the end of the first week of observation regardless of surface decontamination time. After a month in BSA the contamination rate of these root pieces increased to 60-80%. Contamination of roots that were surface decontaminated with chloramine T was minimal in the first week but increased during the course of the experiment. Hyphae were observed extending from a few of the root pieces in BSA after about 7 days. Hyphal growth did not extend beyond 500 μm and eventually cultures became contaminated. Further experiments showed that increasing either time of exposure of the roots to chloramine T or strength of the solution, resulted in a reduction in contamination but also in the number of cultures in which extraradical hyphae were apparent.

ii. Axenic culture of VA mycorrhizal fungi with onion and grass seedlings: The aim of this experiment was to produce whole plants with uncontaminated roots that could be colonised by *G. decipiens* and/or *G. rosea* in culture to produce axenic extraradical hyphae. Although roots need not be attached to whole plants for mycorrhiza formation, it was thought that these roots would exhibit greater growth and that actively growing roots might be more susceptible to mycorrhiza formation.

Seeds of onion and carpet grass were washed in distilled water and surface decontaminated with chloramine T solution (50 g l^{-1}) containing 0.05% Tween 80, for 15 minutes. Seeds were then rinsed 3 times in NaCl solution (10 g l^{-1}) containing 0.05% Tween 80, once in sterile distilled water, transferred to moist filter paper in Petri dishes and incubated at 28 °C in the dark. Uncontaminated seedlings were subsequently transferred to sterile media for dual culture with germinated spores. Sterile Murashige and Skoog Basal Salt (MS) medium and Murashige and Skoog Modified Basal Salt (MSM) medium, solidified with 10 g l^{-1} agar (Difco Bacto) were poured into plastic Petri dishes. After the media had set, a hot, sterile metal rod was used to make depressions in the sides of both halves of the dishes, such that when the dish was closed a small hole, 0.3 cm diameter, flush with the surface of the agar was formed (Koske, 1982). These plates were used for growth of onion and carpet grass seedlings.

Spores of *G. decipiens* and *G. rosea* extracted from pot cultures, were surface decontaminated. Spores were transferred to 24-well tissue culture dishes containing 0.75 ml per well of a (3.2 units ml^{-1}) cellulase solution. One to four spores were incubated per well and monitored for germination and contamination using a dissecting microscope.

Two-week old seedlings were transferred to MS and MSM plates (1 seedling per plate) and placed such that their emerging roots were on the medium and the upper half of each plant was protruding from the dish through the depression (Koske, 1982). Lids of the dishes were replaced with their depressions in line with those of the bottoms and the holes were sealed with sterile lanolin. Dishes were then

completely sealed with sterile lanolin and covered with aluminium foil leaving the plant stems exposed. Dishes were incubated vertically 2 m away from two fluorescent lamps (40 W each) at 24 °C and monitored daily. After a week, uncontaminated seedlings were inoculated with a germinated spore of *G. decipiens* or *G. rosea* and resealed.

The germination rate of mature spores of *G. decipiens* and *G. rosea* isolated from pot cultures was about 40% in cellulase solution after 4 to 7 d. Contamination rate of spores was less than 10% after 4 weeks. In the first week over 50% of dishes were discarded due to fungal contamination. Seedlings that remained uncontaminated were inoculated with *G. decipiens* or *G. rosea* spores, but all died during the following 3-4 weeks. Staining of roots of inoculated seedlings showed that germ tubes of VA mycorrhizal fungi had not penetrated the roots. This method was repeated several times and seedlings that had been surface decontaminated in various concentrations of chloramine T solution (10-50 g l^{-1}) following germination were also used. Contamination was reduced but seedlings all died within 2 weeks with this treatment.

iii. Culture of VA mycorrhizal fungi with root organ cultures of watermelon and leek: In this experiment axenic root organ cultures of leek and watermelon were prepared and inoculated with germinated spores of *G. decipiens* or *G. rosea* in agar cultures. This was done to produce root cultures colonised by the mycorrhizal fungi which would generate axenic extraradical hyphae.

Vermiculite, size 2/3/4, (Grace/Sierra Horticultural Products Company) was passed through a 2 mm sieve to remove the fine particles. Coarse particles were retained, oven dried and dispensed in 5-6 g aliquots into 2 cm deep Petri dishes. Dishes were autoclaved twice for 30 minutes on two consecutive days before 28-30 ml sterile Murashige and Skoog (MS) solution was pipetted into the Petri dishes. MS medium solidified with agar (10 g l^{-1}) was prepared and poured into 2 cm deep Petri dishes. Modified White's (MW) solution was prepared and used for culture of excised roots, while MS+vermiculite and MS+agar media were used for dual culture of roots and germinated spores.

A method was developed to produce aseptic excised root cultures of watermelon. Seeds of watermelon were germinated on moist filter paper in sterile Petri dishes, after which 3-4 cm of apical portions of fast growing radicals were excised, surface decontaminated in a solution of Chloramine T (50 g l^{-1}) containing 0.05% Tween 80 for 3 minutes. Roots were then washed three times in sterile NaCl solution (10 g l^{-1}) containing Tween 80 and rinsed in sterile distilled water. Excised roots were transferred in groups of 2-5 to 50 ml of MW solution amended with penicillin and streptomycin (500 μg ml^{-1} each) in 125 ml flasks and incubated with shaking (120 r.p.m.). Roots were grown for about 15 days at 28 °C in the dark before being transferred to MS+vermiculite plates or MS+agar plates. This procedure was repeated with seeds of leek. Spores of *G. decipiens* and *G. rosea* were extracted from pot cultures and prepared as previously described.

MS+vermiculite plates were inoculated with 1-2 excised watermelon roots and MS+agar plates with 1-2 excised roots of watermelon or leek. One to four germinated spores were aseptically transferred to each plate using a micropipette. Plates were inoculated using spores grown for different lengths of time after germination: 1-3 days, 4-7 days, or 8-14 days. Spores were placed in a variety of positions relative to roots: adjacent to, or within 1 cm of the main root near the region where lateral roots arose; adjacent to lateral roots; or 1-2 cm away from roots. Plates were sealed with two layers of parafilm, incubated in the dark at 28 °C and hyphal growth was monitored with a dissecting microscope. Samples of roots were taken at intervals and stained to assess colonisation. Modifications of MS solution in MS+agar medium were also tested: phosphate (KH_2PO_4) was varied from 0 to 40 mg l^{-1} in increments of 10 mg l^{-1}; KNO_3 or NH_4NO_3 were used as sole nitrogen source; sucrose was varied from 5 to 15 g l^{-1}; the pH before autoclaving was varied from 5.5 to 7.0 in increments of 0.5 units; and agar concentration was varied from 5 to 10 g l^{-1}. Excised roots were also cultured in MW containing 10 mg l^{-1} KH_2PO_4 before transferring to MS plates.

Most of the root cultures in MW solution became contaminated by what appeared to be a single species of bacterium. A series of sensitivity tests using different antibiotics showed that chloramphenicol at a concentration of 16 μg ml^{-1} was inhibitory to the contaminant. MW medium was subsequently amended with 16 μg ml^{-1} chloramphenicol and contamination was reduced to less than 10%. Roots, however, grew very slowly in this medium. This concentration of chloramphenicol is reportedly toxic

to plant cell cultures (Pollock *et al.*, 1983). Surface decontamination of seeds before germination was also attempted, but germination rates were very low, roots grew poorly and were contaminated when transferred to tissue culture. Although initially they appeared healthy, excised leek roots did not to grow in culture and further dual culture experiments were set up with watermelon roots as plant material.

In dual cultures with vermiculite as substrate, contamination rates were higher than on agar. Growth of contaminating fungi was frequently observed within the first week after inoculation on vermiculite and most cultures (75%) were discarded within 4 weeks. To reduce contamination, the coarse vermiculite fraction was autoclaved for a further 30 minutes on the third day (following two 30 minute periods on previous days) before adding media, but this did not significantly decrease contamination. There was no observable change in watermelon or leek root morphology when compared to controls, in cultures with germinated spores. Germ tubes that were not initially in contact with watermelon roots did not show directional growth toward roots but appeared to grow randomly across the medium, sometimes making contact with roots. Staining of roots showed no evidence of penetration regardless of initial position of spores, age of germ tubes or modifications of MS medium. After several weeks in dual culture, elongation of the main root tip and production of new laterals slowed and some roots subsequently turned brown. Dual cultures of watermelon roots and *Gigaspora* spp. were maintained in MS+agar medium for as long as 5 months without forming mycorrhizas.

iv. Culture of VA mycorrhizal fungi with Ri-T DNA transformed root organ cultures of carrot: Root organ cultures of carrot transformed by *Agrobacterium rhizogenes* were prepared in order to take advantage of the increased growth of transformed roots over nontransformed roots such as those used in the previous experiment. It was felt that this increased growth might also result in greater mycorrhizal potential. Transformed roots were cultured with germinated spores of *G. decipiens* and *G. rosea* in agar media.

Modified White's (MW) medium was used for culture of transformed roots while minimal (M) medium was used for culture of transformed roots with germinated spores. Transformed carrot root organ cultures were prepared following the method of Bécard and Fortin (1988). Carrot tap roots were scrubbed clean, surface decontaminated in NaOCl (20 g l^{-1}) for 20 minutes and rinsed in sterile distilled water before being sectioned transversely into 5 mm thick slices. The slices were placed on water agar (10 g l^{-1}) in Magenta boxes and *A. rhizogenes* was inoculated on the upper surface of the sections. A loopful of bacterial suspension taken from a 2-day old culture was used as inoculum and root slices were incubated in the dark at 28 °C. Uninoculated carrot root slices were used as controls.

Three weeks after inoculation with *A. rhizogenes*, transformed roots proliferating on the inoculated sections were aseptically excised and transferred to Magenta boxes containing MW medium prepared with or without agar and supplemented with 500 mg ml^{-1} carbenicillin or 500 μg ml^{-1} cefotaxime, or both. Root cultures were monitored daily for bacterial contamination. When bacterial growth was observed on the medium, transformed roots were transferred to fresh MW medium or liquid medium amended with antibiotics. Several transfers to fresh medium were necessary to produce uncontaminated transformed roots. Transformed carrot roots grew prolifically on MW medium and appeared healthy. A clonal culture was initiated from one root apex and maintained by subculturing fortnightly on MW medium. Roots were incubated in the dark at 28 °C.

Tips (1 cm long) of lateral roots from the clonal culture were excised and grown individually on M medium in Magenta boxes or Petri dishes for 20 days. Germinated spores (1-5 per plate or box) of *G. decipiens* or *G. rosea* were transferred to positions on the media such that germ tubes were either near the region where primordia for new lateral roots are usually formed, or touching that region. Spores were also placed further away (1-2 cm) from roots, near, or in contact with, lateral roots. Spores were routinely used within 3 days of germination, but some cultures were inoculated with spores grown for up to 14 days following germination. Plates and boxes were sealed with parafilm and incubated at 28 °C in the dark. Cultures were monitored for fungal growth and for contamination with a dissecting microscope. Roots were sampled at intervals and stained for mycorrhiza formation.

In several further experiments, lengths of lateral roots excised from the clonal culture were varied (1 to 4 cm) and grown on M medium for 2 to 4 weeks prior to adding inoculum. Modifications of M medium were also tested in which the quantities of some components were altered. In the following

examples, standard concentrations of components were replaced by the concentrations indicated (1) 40% phosphate stock, (2) sucrose (5 g l^{-1}), (3) 40% phosphate and sucrose (5 g l^{-1}), (4) 40% macronutrient stock, and (5) sucrose (5 g l^{-1}), 40% phosphate and 40% macronutrient stock. The pH of M medium was also varied from 5.0 to 7.0 and the period of autoclaving was changed from 15 minutes to 10 minutes.

Growth of carrot roots was slower on M medium than on MW medium. Hyphae from several spores in dual culture with carrot roots grew over and into the medium, across and along roots and branched extensively. Auxiliary cells were formed on some branches. After 2 to 3 weeks, hyphae had made contact many times with roots in some cultures. Staining of roots from dual cultures showed, however, that hyphae had not penetrated the roots. Age of germ tubes at time of inoculation did not affect penetration of roots. Neither modifications to M medium nor altered time of autoclaving lowered the resistance of roots to colonisation. Uncontaminated dual cultures were maintained for up to three months without hyphal penetration of roots.

v. Establishment of VA mycorrhizas in root boxes: Glass plates of dimensions 25 cm by 15 cm were separated by strips of perspex, 5 mm thick and 1 cm wide, that were placed at the two sides and the bottom of the plates. A 5 mm space was left between the vertical and horizontal strips of perspex to prevent waterlogging and anaerobic conditions at the bottom of the box. The boxes were filled with potting mix and a leek seedling and five spores of *G. decipiens* or *G. rosea* were placed in the soil at the top of the box. The boxes were wrapped in aluminum foil and placed at an angle of 45 °C to the vertical in grooves made in a wooden plank. This method was devised to promote the downward growth of the roots along the lower glass plate. The boxes were monitored weekly at x100 magnification to evaluate the development of extraradical hyphae. Mycorrhizae formed readily under these conditions. Boxes with moderate to extensive extraradical hyphal growth were removed and the roots and hyphae were used for nuclear cytological studies.

Specific Objective: 2. **To establish enzyme systems and conditions for efficient protoplast release from VAM fungal hyphae.**

In these experiments, the ability of commercial lytic enzymes to induce protoplast formation from hyphae of *G. decipiens* and *G. rosea* was investigated. Hyphae were incubated in several combinations and concentrations of lytic enzymes, and solutions of KCl and sorbitol were also tested for their effects in facilitating enzyme action.

a. Analysis of commercial lytic enzyme preparations.

Spores of *G. decipiens* and *G. rosea* were recovered from pot cultures, surface decontaminated and then germinated in groups of 5-8 in 2.5 ml cellulase solution (3.2 units ml^{-1}) in Falcon 6-well Multiwell™ tissue culture dishes. Immediately before use, extraradical mycelium was recovered from pot cultures as for spores, and either washed in distilled water only, or treated with chloramine T solution (50 g l^{-1}) for 5-10 minutes and washed in sterile distilled water.

Commercial enzyme preparations used in these trials, their sources and activities, where known, are presented in Table 1. *Helix pomatia* lytic enzyme (HPLE), a crude freeze-dried extract from the snail gut, was obtained from Dr. F. Kevei, Attila Jozsef University, Szeged, Hungary. Sterile stock solutions of 1.1 M sorbitol and 1.2 M potassium chloride (KCl) were prepared for use as osmotic stabilisers. Enzyme mixtures were dissolved in 0.6 M KCl unless otherwise stated, centrifuged briefly to sediment insoluble matter and filter sterilized.

Table 1. Sources of Commercial Lytic Enzymes and Enzyme Mixtures Used in Protoplasting Trials.

Enzyme	Source organism(s)	Activity
Cellulase	*Aspergillus niger*	5.1 units mg^{-1}
Cellulase	*Penicillium funiculosum*	6.7 units mg^{-1}
Cellulase	*Trichoderma viride*	4.4 units mg^{-1}
Chitinase	*Streptomyces griseus*	4.0 units mg^{-1}
Driselase	Basidiomycetes	15% protein*
Hemicellulase	*Aspergillus niger*	0.022 units mg^{-1}
Lysing Enzymes	*Cytophagia* sp.	25% protein*
Lysing Enzymes	*Rhizoctonia solani*	*
Lysing Enzymes	*Trichoderma harzianum*	80% protein*
Novozym™ 234	*Trichoderma harzianum*	*
Pectinase	*Aspergillus niger*	10.5 mg protein ml^{-1}
Protease	*Aspergillus oryzae*	0.14 units mg^{-1}
Protease	*Streptomyces griseus*	*
Sulfatase	*Helix pomatia*	15.4 units mg^{-1}

* Activity of enzyme not known.

In the first set of trials (1A to 1E) varying concentrations of Novozym (5-25 mg ml^{-1}) and HPLE (1.5-12 mg ml^{-1}) were used. In the second set of trials (1F to 1M) chitinase was included in the enzyme mixtures. This method of adding another enzyme preparation in each subsequent set of trials was continued using cellulase (trials 1P to 1W), hemicellulase (trials 1AA to 1EE), lysing enzymes (trials 1FF to 1MM) and pectinase (trials 1PP to 1WW).

Cellulase solution was gently pipetted away from uncontaminated wells of multiwell dishes containing 3 or more germinated spores and immediately replaced with 2.5 ml of appropriate enzyme mixture. Spores were usually used 3-7 days after germination but enzyme mixtures in trial 1E and trial 1M were applied to spores grown for 1 day and 14 days after germination. Trials 1E and 1M were also repeated using a range of concentrations of KCl (0.4-0.8 M) and sorbitol (0.4-0.7 M) as osmotic stabilisers. Each enzyme mixture was used in 2 or 3 wells containing germinated spores and each set of trials was repeated subject to availability of spores and enzymes. Extraradical hyphae of VA mycorrhizal fungi extracted from pot cultures were placed in multiwell dishes and covered with 2.5 ml of enzyme mixtures as above. Controls consisted of fungal material incubated in osmotic stabiliser only. In all trials, dishes were incubated at room temperature (28-30 °C) on a reciprocal shaker (~60 r.p.m.) and observed at 30 minute intervals for 4-6 hours under an inverted microscope (American Optical Biostar) at x100 magnification. Dishes were sealed with parafilm before overnight incubation and, if uncontaminated, observed for a further 2-4 hours on the following day.

This investigation consisted of more than 30 trials done in duplicate or triplicate with lytic enzymes at several concentrations. Under the conditions in which enzyme cocktails were applied, no

protoplasts were released from hyphae of *G. decipiens* and *G. rosea*, even after overnight incubation. When high concentrations of Novozym (> 15 mg ml^{-1}) were used in enzyme mixtures, walls of germ tubes observed under high magnification (x400) appeared to be partially degraded. After this observation, germinated spores were incubated in protease (5 or 50 mg ml^{-1}) overnight before and/or after treatment with enzyme mixtures 1E, 1M and 1MM. These treatments did not appear to enhance further wall degradation and did not stimulate release of protoplasts.

KCl and sorbitol were each used at different concentrations as osmotic stabilisers to investigate possible effects on protoplast formation. Neither concentration of KCl or sorbitol nor age of germ tubes affected protoplast release. In enzyme solutions containing extraradical hyphae that were not surface decontaminated, bacterial growth was visible after incubation for more than 3 hours. Chloramine T treatment reduced contamination significantly but walls of extraradical hyphae were not significantly degraded by enzyme treatments and no protoplasts were formed.

b. Inclusion of *Aspergillus nidulans* autolytic enzyme preparation.

A second series of trials (2A to 2E) was conducted in the same way using the above enzymes dissolved in a crude autolytic enzyme preparation from *Aspergillus nidulans* (Isaac and Gokhale, 1982). Again no protoplasts were produced from germinated spores of *G. decipiens* or *G. rosea*.

c. Inclusion of chitosanase enzyme preparations.

It has been shown that Zygomycete fungi contain chitosan in their walls (Bartnicki-Garcia, 1968). It was assumed that *Gigaspora* spp. could also have this polymer as a major wall constituent. Attempts to find a commercial source of chitosanase were unsuccessful and two further series of experiments (3A to 3EE and 4A to 4EE) were done that included chitosanase prepared either from a *Bacillus pumilus* culture or from an actinomycete identified as *Streptomyces* no. 6.

The crude extract of *B. pumilus* culture (BPE) was stored at -20 °C and tested in mixtures with commercially prepared lytic enzymes for its ability to release protoplasts from hyphae of germinated spores of *G. decipiens*. BPE, Novozym and HPLE were dissolved at various concentrations in 0.6 M KCl (trials 3A to 3E). In subsequent trials, various concentrations of chitinase (trials 3F to 3M), lysing enzymes (trials 3P to 3W) and cellulase (trials 3AA to 3EE) were included in the enzyme mixtures. Enzyme solutions were filter sterilised and applied to hyphae of *G. decipiens* grown for 3-7 days after germination in 6-well tissue culture dishes.

Extracts from *B. pumilus* cultures used in conjunction with combinations of lytic enzymes did not effect protoplast release from hyphae of *G. decipiens* even after overnight incubation.

Protein recovered from the culture filtrates of *Streptomyces* no. 6 (SLE) was tested for its capacity to release protoplasts from mycelium of the zygomycete *Rhizopus stolonifer* and from hyphae of germinating *G. decipiens* spores. These *G. decipiens* spores were incubated in enzyme mixtures containing various concentrations of SLE with Novozym and chitinase (Trials 4A to 4M) to which were added cellulase and hemicellulase (Trials 4P to 4W) and lysing enzymes and sulfatase (Trials 4AA to 4EE, Table 2). Enzyme mixtures were dissolved in 0.6 M KCl except in repetition of trials 4M and 4EE where enzymes were dissolved in varying concentrations (0.4-0.8 M) of KCl containing 20 mM sodium phosphate buffer (pH 7) and made up with or without 3 mM $CaCl_2$. Trials 4M and 4EE were repeated with varying concentrations (0.4-0.7 M) of sorbitol replacing KCl. In controls germinated spores were incubated in osmotic stabilisers only. Enzyme mixture in trial 4M was also applied to spores that had been grown for 1-3 days, 4-7 days and 7-14 days after germination. Dishes were incubated and observed as in previous experiments.

From 1,700 ml of *Streptomyces* culture medium approximately 100 mg of protein precipitate was routinely obtained. The enzyme mixture as made up in trial 4B, which consisted of SLE (0.75 mg ml^{-1}), Novozym (2.5 mg ml^{-1}) and chitinase (0.5 mg ml^{-1}) dissolved in 0.6 M KCl or 0.55 M sorbitol, was optimal for liberation of protoplasts from mycelium of *R. stolonifer*. Novozym and chitinase alone at these, or higher, concentrations did not induce protoplast production from *Rhizopus* mycelium. Different batches of SLE liberated protoplasts from *Rhizopus* at similar concentrations. After incubation of *G.*

decipiens hyphae for several hours on one day and subsequently overnight, in different concentrations of several enzymes, examination showed that no protoplasts had been formed. Germ tube age, osmotic stabiliser, pH or protease (5 to 50 mg ml^{-1} prior to, or following, main enzyme treatments) had no effect on protoplast release from *G. decipiens*.

Table 2. Combinations and Concentrations of Lytic Enzymes Used in Protoplasting Trials 4AA to 4EE

Lytic enzyme	Concentrations (mg ml^{-1}) of lytic enzymes				
	Trial 4AA	Trial 4BB	Trial 4CC	Trial 4DD	Trial 4EE
SLE	3	5	10	15	15
Novozym	5	5	10	10	10
Chitinase	1.5	3	5	10	10
Cellulase*	-	-	-	-	10
Hemicellulase	-	-	-	-	10
Lysing enzymes†	2.5	5	10	10	10
Sulfatase	5	5	5	10	10

SLE = *Streptomyces* lytic enzyme.
* = From *Penicillium funiculosum*.
† = From *Trichoderma harzianum*.

Specific Objective: 3. **To investigate the nuclear division cycle in VA mycorrhizas.**

a. Nuclear division within the fungal symbiont:

Surface-decontaminated spores of *G. decipiens* or *G. rosea* were germinated *in vitro* in multiwell dishes containing 3.2 units ml^{-1} cellulase, from *T. reesei*, or distilled water. Germtubes were defined as unbranched hyphal lengths of 5 mm or less produced by germinated spores. Hyphal lengths, sometimes branched, in excess of 5 mm but less than 2.5 cm were classified as moderately grown (MG) preinfection hyphae from germinated spores. Extensively grown (EG) preinfection hyphae were those with total lengths greater than 2.5 cm. These hyphal designations were chosen to highlight differences in the nuclear cytology between "young" and "older" hyphae. In mycorrhizas, those hyphae colonising plant roots were defined as intraradical hyphae and those emanating from roots as extraradical hyphae. All of these hyphal categories were screened cytologically by a range of techniques, some of which were designed 'in house'. Most of the techniques routinely employed used 4',6-diamidino-2-phenylindole (DAPI) fluorescence to visualise nuclei. Vast amounts of data were generated in this sub-project and the main findings are summarised below:

i. Definitively dividing nuclei were not detected in germ tubes and MG or EG preinfection hyphae. Putative mitotic structures were visualised in both intraradical and extraradical hyphae.

ii. The average nuclear diameter in all preinfection stages was 3 μm while the average nuclear diameter in all mycorrhizal stages was 1 μm.

iii. Paired nuclei were observed migrating from spores into germtubes and along preinfection hyphae. In EG preinfection hyphae, if a mycorrhizal association was not established, then nuclei were observed to migrate into auxiliary cells or back into the spore.

The results suggest that extraradical hyphae would be a suitable stage in the lifecycle of VA mycorrhizal fungi to target for transformation.

b. Nuclear division within plant roots:

This study sought to investigate the possible effect VA mycorrhizal fungi may have on cell division in the host. Roots were classified according to the degree of VAM fungal colonisation. Five categories were used to describe the level of colonisation: 0 - uncolonised roots; 1 - poorly colonised root pieces with up to 25 % colonisation and arbuscules not necessarily present; 2 - moderately colonised root pieces with up to 50 % colonisation and arbuscules present; 3 - well colonised root pieces with up to 70 % colonisation and arbuscules present and 4 - highly colonised root pieces with more than 70 % colonisation and arbuscules present. The meristematic regions from roots in each category were scored for their mitotic indices and for each mitotic divisional stage.

A decrease in the mitotic index was observed with increasing infection (Figure 2). All the means of the different levels of infection were significantly different from the control. With the exception of moderately and well infected roots, all the means were significantly different from each other ($P<0.05$).

A comparison of the same stage of mitosis for the different levels of colonisation showed that there was no significant difference between metaphase, anaphase and telophase, although the actual mean values were lower than that of the control. There was however a significant increase in the number of meristematic cells in prophase as the level of colonisation increased (Figure 3).

Specific Objective: 4. **To isolate genomic DNA from VAM fungal hyphae or protoplast suspensions.**

Protoplast suspensions were not available and, although germinated spores with attached hyphae were readily available, it was considered unnecessary to germinate the spores prior to DNA isolation. DNA was isolated from spores by a modification of the method used by Burggraaf & Beringer (1989). Surface decontaminated spores of species of *Gigaspora* were crushed in extraction buffer [0.45 mM EDTA pH 9.0 , 1% (w/v) SDS, sodium salt, 10 mM Tris.Cl pH 8.0, 1 mg ml^{-1} proteinase K] and incubated for a minimum of 4 h at 37 °C. Microcentrifuge tubes were spun at 11 600xg for 30 sec to precipitate the spore walls and protein/membrane/SDS complexes. Supernatant was transferred to fresh tubes and DNA was precipitated with 7.5 M ammonium acetate and 95 % ethanol. Dried DNA pellets were dissolved in TE buffer (pH 8.0) and treated with 1 mg ml^{-1} DNase-free pancreatic RNase. The amount of TE used to dissolve the DNA was dependent on how the DNA was to be used after isolation. Using this method it was possible to isolate DNA from single spores that could be visualized on an agarose gel. Protein impurities, if detected, were normally removed by a phenol/chloroform/isoamyl alcohol extraction and any remaining RNA was removed by a further treatment with 1 mg ml^{-1} RNase.

The *Gigaspora* DNA obtained was readily digestible with restriction enzymes, indicating its purity. DNA from spores of *G. decipiens* has been restricted with the following restriction enzymes: *Bam*HI, *Bgl*II, *Eco*RI, *Hae*III, *Hin*dIII, *Xba*I and *Xho*I. Restricted *Gigaspora* DNA appeared as smeared lanes on agarose gels, while unrestricted, high molecular weight *Gigaspora* DNA normally migrated a similar distance to the largest fragment of the λDNA/*Hin*dIII standard (~23 kb).

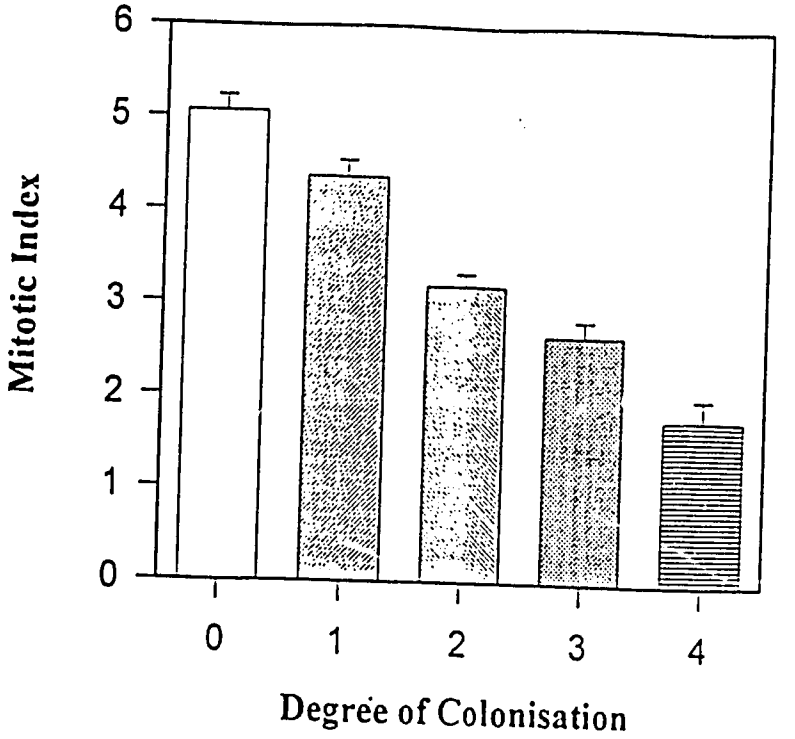

Figure 2: Mean root mitotic index of *A. cepa* for different levels of colonisation.

0 - uncolonised onion roots, 1 - poorly colonised, 2 - moderately colonised, 3 - well colonised and 4 - highly colonised onion roots. Error bars are standard deviations of the means.

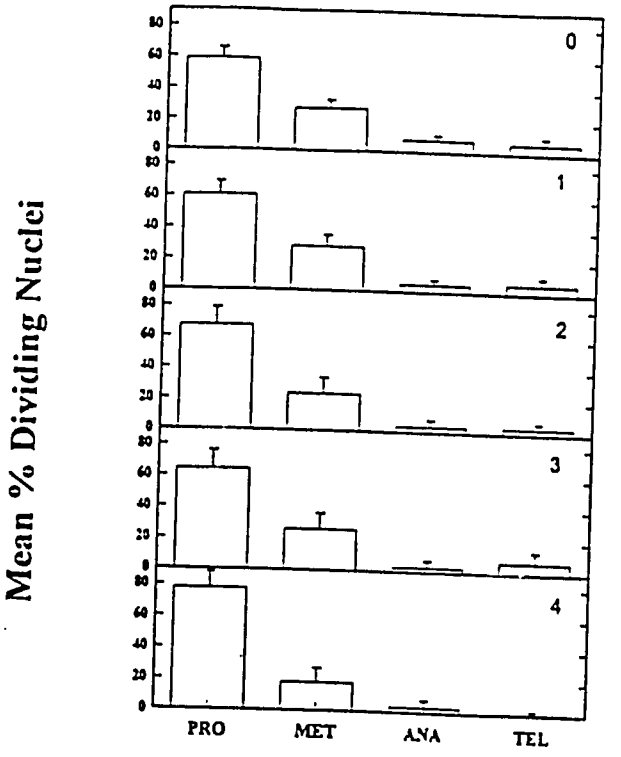

Figure 3: Mean percent dividing nuclei for the different levels of colonisation and the stages of mitosis.

0 - uncolonised onion roots, 1 - poorly colonised, 2 - moderately colonised, 3 - well colonised and 4 - highly colonised onion roots. Error bars are standard deviations of the means.

Two methods were used to quantify the DNA from spores of *G. decipiens* and *G. rosea*. In the first method, the amount of DNA was estimated based on the intensity of fluorescence emitted by ethidium bromide. The amount of fluorescence is proportional to the total mass of DNA. Thus the quantity of DNA can be estimated by comparing its fluorescence with that of a known series of standards (Sambrook *et al.*, 1989). Quantification of DNA isolated from 1, 2 and 3 spore samples of *G. decipiens* and *G. rosea* was made by comparison to the intensity of fluorescence of a known series of λDNA standards of 0.5, 1.0, 1.5, 1.7, 2.0, 2.5, 3.0, 3.4 and 5.2 ng μl^{-1}. After four separate comparative gels using 2 replicates of each spore sample in each gel it was crudely estimated that the amount of DNA within each spore of *G. decipiens* or *G. rosea* was between 1.0 and 1.5 ng.

In the second approach, samples of DNA isolated from 1, 2, 3, 5 and 10 spore samples of *G. rosea* were sent to the Department of Genetics at the University of Georgia for a fluorometric quantification. A preliminary estimate of 1.7 ng DNA $spore^{-1}$ for this species was obtained.

Although estimates of the amount of DNA made by both methods of DNA quantification were preliminary they were similar to the estimate of 1.5 - 2.0 ng $spore^{-1}$ of *G. rosea* made by Adolphe and Gianinazzi-Pearson (1993).

Eight different methods for the preparation of template DNA for PCR from *Gigaspora* spores were investigated. Of these methods, only a further modification of the Burggraaf and Beringer (1989) method, presented above, gave consistent amplification. In this modification, DNA was isolated from 200 spores in the extraction buffer, precipitated using NaCl/ethanol, extracted three times with phenol/chloroform/isoamyl alcohol, reprecipitated with no additional salt, pelleted and resuspended in 5 to 25 μl TE.

Specific Objective: 5. **To develop gene transfer technology for a VAM fungus of the genus *Gigaspora*.**

a. Sensitivity of VA mycorrhizal fungi to antibiotics and construction of a plasmid encoding hygromycin B phosphotransferase.

No known studies have been conducted on VA mycorrhizal fungi to determine their sensitivities to antibiotics. Antibiotics are commonly used as selectable markers in fungal transformation. The test ranges of antibiotics used in this study were determined from values established for other zygomycetous fungi and an ectomycorrhizal fungus (Revuetta and Jayaram, 1986; Suavez and Esalvo, 1988; Barrett *et al.*, 1990; Yanai *et al.*, 1990; Burmester, 1992). The purpose of this study was to determine the sensitivity of *G. decipiens* and *G. margarita* to selected antibiotics or benomyl with the eventual aim of constructing a plasmid vector carrying an appropriate resistance gene under the control of a fungal promoter that could be used to transform *Gigaspora* species.

Concentrations of 10, 15, and 25 $\mu g\ ml^{-1}$ geneticin (G418, Sigma); 5, 20 and 50 $\mu g\ ml^{-1}$ neomycin (Sigma); 2, 5, 7 $\mu g\ ml^{-1}$ hygromycin B (Sigma); 5, 20 and 50 $\mu g\ ml^{-1}$ kanamycin (Sigma); and 1, 2 and 4 $\mu g\ ml^{-1}$ benomyl (= Benlate from ICI) were separately made up in 3.2 units ml^{-1} cellulase. Aliquots of 1.0 ml of each antibiotic or benomyl concentration in cellulase, or cellulase alone were separately dispensed into the 3.4 ml wells of sterile multiwell dishes (24 wells per dish). Each well contained a surface-decontaminated spore of *G. decipiens*. The 15 drug concentrations and a control were arranged as four blocks randomly assigned to different positions within an incubator set at 28 °C. A block consisted of eight multiwell dishes and each dish contained two treatments. Four replicates of 12 spores were assigned to each treatment. A total of 766 spores was used in this experiment. The dishes were sealed with parafilm. The spores were examined daily for 39 d using a binocular microscope at x100 magnification. Germinated spores and the extent of hyphal elongation were recorded. The data were analysed by analysis of variance and the means were separated by Tukey's honestly significantly difference test (Zar, 1984). The results presented in Table 3 suggest that spores of *G. decipiens* may be sensitive to low concentrations of hygromycin B, neomycin and benomyl.

Table 3: Percent germinated spores of *G. decipiens* and mean hyphal lengths attained after 39 d incubation in four antibiotics or benomyl.

Values are the means of four replicates of 12 spores each; means followed by the same letter are not significantly different ($P<0.05$).

Treatment	Concentration ($\mu g\ ml^{-1}$)	Percent germinated spores	Mean hyphal length (cm)
Cellulase Control	0	81a	3.5
Geneticin (G418)	10	46b	1
	15	48b	2
	25	54b	1.5
Hygromycin B	2	6c	0.5
	5	2c	0.5
	7	0c	0
Kanamycin	5	75a	3.5
	20	70a	4
	50	77a	3
Neomycin	5	10c	0.5
	20	0c	0
	50	0c	0
Benomyl	1	2c	0.3
	2	0c	0
	4	0c	0

Additional experiments tested the sensitivity of *G. margarita* to different concentrations of hygromycin B and neomycin. Spores of *G. margarita* were used in this experiment since spores of *G. decipiens* were unavailable and it did not appear critical to the establishment of antibiotic sensitivity values since the general aim was to develop a transformation system for *Gigaspora*. The results indicated that *G. margarita* spores were also sensitive to hygromycin B.

b. Construction of a transformation vector.

The previous experiments had established that *G. decipiens* and *G. margarita* are sensitive to hygromycin B and the next goal was to incorporate a hygromycin B resistance gene (*hyg*^{r}) into a plasmid construct that could be used as a transformation vector. Hygromycin B resistance has been used as a dominant selectable marker for the transformation of other fungi (Kiuchi *et al.*, 1991; Wnendt *et al.*, 1990). A yeast artificial chromosome vector, carrying the hygromycin B resistance gene (*hyg*^{r}) driven by

the trytophan synthetase (*trpC*) promoter from *Aspergillus nidulans* and labelled pYAC5* was obtained from Dr. H. Brody (University of Georgia). An *Eco*RV fragment from pYAC5* carrying this *hyg*^{r} gene was cloned into pBluescript SK+ (Stratagene) to give pSPC1.

It is intended that a *Gigaspora* promoter will replace the *trp C* promoter when one has been isolated. Restriction sites are present in the promoter region of pSPC1 which will enable excision of the *trp C* promoter and replacement with the *Gigaspora* promoter. Fungal vectors, in addition to a selectable marker gene, should contain a strong promoter from an organism of the same taxonomic class, to allow transformation. It is unlikely that an ascomycetous promoter (*trp C*) will function in a Zygomycete. However, a study by Barrett *et al.* (1990) suggests that a certain amount of plasticity in recognition exists for promoter and terminator sequences among filamentous fungi. As a result of this finding attempts should be made to transform *Gigaspora* with pSPC1.

c. Strategies to isolate a *Gigaspora* promoter.

The actin promoter was chosen for isolation since the actin gene is not developmentally regulated and is therefore likely to be expressed continuously in the cell. In fungi, actin is coded for by one gene, unlike other eukaryotes where it is encoded by a family of genes (Gallwitz and Seidel, 1980). In fungi, actin has been reported to be associated with hyphal growth and organelle movements (McKerracher and Heath, 1987). Another reason for targeting the actin promoter is that actin is highly conserved among organisms (Hightower and Meagher, 1986). Fungal actin shows a higher degree of intrakingdom conservation than plant actins and the fungal actin gene is more closely related to animal than plant actin genes (Reece *et al.*, 1992). It is believed that there was a common ancestral actin gene, from which the actin genes of present day organisms have been derived. Two strategies were used in attempts to isolate the promoter from the *Gigaspora* actin gene.

i. Construction of genomic libraries: This involved the construction of VA mycorrhizal fungal genomic libraries in *E. coli* using the cosmids pWE15 (Promega) and SuperCos 1 (Stratagene) or the phage cloning vector λEMBL 3 (Promega). In all of the numerous attempts at library construction only a few hundred transformants were obtained. As no representative libraries were constructed, it was considered futile to attempt to probe these clones to see whether a *Gigaspora* actin gene sequence had been cloned. The main problem was the inability to obtain enough *Gigaspora* DNA for library construction and this approach was discontinued.

ii. The use of inverse PCR: Inverse PCR differs from conventional PCR in that it can be used to obtain the sequences of regions flanking known DNA (Ochman *et al.*, 1990). In this method primers were designed from conserved upstream portions of fungal actin gene sequences, obtained from accessions in GenBank. These primers were used to amplify an upstream portion of the actin gene transcription unit in *Gigaspora*. Inverse primers could then be designed from these forward primers. DNA isolated from *Gigaspora* would be restricted with a range of enzymes using each enzyme individually in an attempt to generate 2-3 kb fragments of DNA. The restricted DNA would be ligated to form short circular segments of DNA. Depending on the positions of enzyme sites in the *Gigaspora* DNA, it may be possible to obtain a circularised segment of DNA from which the promoter region could be amplified by the inverse PCR primers. The amplified flanking regions would be cloned and sequenced to determine the sequence of the promoter. The advantage of this method is that it requires very small amounts (nanogram) of DNA.

The actin sequences from the following fungi were obtained from GenBank: *Absidia glauca*, *Aspergillus nidulans*, *Kluyveromyces lactis*, *Phytophthora infestans*, *Saccharomyces bayanus*, *S. cerevisiae* and *Schizosaccharomyces pombe*. These sequences were aligned using DNAStar^R to identify conserved regions within the gene sequences. Two conserved regions in the upstream end of the actin sequences were used to design degenerate oligonucleotide primers (ACT 1100 and ACT 1585, Table 4).

Table 4: Degenerate PCR primers designed to amplify the upstream portion of the actin gene from the *Gigaspora* genome.

Bases written in bold represent enzyme restriction sites.

Primer	T_m (°C)	Sequence
ACT 1100 (*Eco*RI)	58-68	5'CCGGAATTCCGGAACTGGGAYGAYATGGA 3'
ACT 1585 (*Bam*HI)	48-52	5'CGCGGATCCGCGCCCTCNGGNARYTCRTACC 3'

R = A or G, Y = C or T and N = A, T, G or C

ACT 1100 and ACT 1585 primers amplified four distinct PCR products from *Gigaspora* DNA. These four *Gigaspora* fragments were sized by comparison to a λDNA/*Hin*dIII standard. The estimates were 500 bp, 350 bp, 200 bp and 125 bp. As actin sequences are highly conserved it can be suggested that the size of the *Gigaspora* actin sequence amplified by PCR should be similar to analogous sequences from the fungal actin sequences obtained from GenBank. These analogous sequences would represent the distance in base pairs between the sequences of ACT 1100 and ACT 1585 primers. The sizes of the actin fragment between these two primers from the GenBank fungal accessions were between 475 and 585 bp. Therefore, it is likely that the largest (500 bp) of the four *Gigaspora* fragments is from an actin sequence. It is unlikely that the four *Gigaspora* fragments represent sequences of an actin gene family since if this were so, these four fragments would have been of similar sizes. The four bands from amplified *Gigaspora* DNA have been restricted with *Bam*HI and *Eco*RI and cloned into pBluescript SK+. Time constraints have prevented the continuation of this approach.

Specific Objective: 6. **To utilise the Polymerase Chain Reaction (PCR) for identifying and monitoring VAM fungal DNA.**

The approach taken, was to amplify the rDNA region of *G. margarita* using primers ITS1, ITS2, ITS3 and ITS4, and sequence the amplified fragments to determine the nucleotide sequences of the internal transcribed spacers. These sequences were then compared with homologous sequences of other fungi. Divergence between sequences of homologous spacers were analysed and PCR primers complementary to ITS sequences of *G. margarita* were designed. The new primers could then be tested with genomic DNA templates from other *G. margarita* isolates and other *Gigaspora* spp.

Data from restriction digests of ITS1+ITS4 amplified fragments were used to design primers modified from those of White *et al.* (1990). Five to eight nucleotides were added at the 5' ends of primers to provide recognition sequences for the restriction endonucleases *Bam*HI (*B*) or *Eco*RI (*E*). Conditions for PCR amplification of rDNA regions with the modified primers were investigated by altering the annealing temperature of cycling programmes and $MgCl_2$ concentration in reaction mixes. *A. nidulans* genomic DNA was used as template to determine approximate parameters, which were then adjusted for *G. margarita* template DNA. Primer concentrations of 1 μM each, 5 μl *G. margarita* DNA solution (~10 ng μl^{-1}), 2 units *Taq* DNA polymerase and $MgCl_2$ at 3.5 mM were optimal in 50 μl reactions with the following cycling parameters: DNA denaturation for 3 minutes at 94 °C for one cycle and 1 minute for 30 cycles; primer annealing at 64 °C for 30 seconds; and primer extension for 1 minute at 72 °C with a further 10 minutes at 72 °C following the final cycle.

The modified primers (Table 5) used as primer pairs *B*-ITS1+*E*-ITS2, *B*-ITS3+*E*-ITS4 and *B*-ITS1+*E*-ITS4, were found to work well with genomic DNA templates from *G. margarita* and *A.*

nidulans. Modified primers used in PCR mixtures with *G. margarita* genomic DNA as template, amplified the 5.8S rRNA gene and flanking internal transcribed spacers. For PCR from previously amplified rDNA fragments, 3.5 mM $MgCl_2$ in reactions was unsuitable and a series of tests showed that 2.5 mM $MgCl_2$ was appropriate. Subsequently, reactions with previously amplified PCR products as templates also worked well. Differential precipitation of amplified rDNA fragments by the method of Paithankar and Prasad (1991), proved effective for removal of PCR primers as primers were not visibly detectable after agarose gel electrophoresis of purified reaction mixes.

Table 5: Modified Primers for Amplification of 5.8S rDNA Regions and Flanking Spacers

Primer	Sequence (5'→3')
B-ITS1	CGGGATCCGTAGGTGAACCTGCGG
E-ITS2	GGAATTCCGCTGCGTTCTTCATCGATGC
B-ITS3	CGGGATCCGCATCGATGAAGAACGCAGC
E-ITS4	GGAATTCCTCCGCTTATTGATATGC

Underlined sequences are the primer sequences described by White *et al.* (1990), while sequences in bold are restriction enzyme recognition sites.

Sizes of amplification products using total DNA or ITS1+ITS4 amplified fragments as template were indistinguishable. The regression line of size standards (R^2 = 0.94) gave approximate sizes of fragments (minus primers) amplified from *G. margarita* with the primer pairs as:*B*-ITS1+*E*-ITS2, 200 bp; *B*-ITS3+*E*-ITS4, 300 bp; and *B*-ITS1+*E*-ITS4, 520 bp. The sequences of these fragments are presented in Figures 4,5 and 6.

A consensus was derived by PRETTY alignment of the sequence for the *G. margarita* 5.8S rRNA gene and flanking internal spacers with homologous sequences from other fungi, where five or more of the aligned sequences carried the same nucleotide at a single site, except where two nucleotides were represented in equal numbers at the same position. The location of the 5.8S rRNA gene was determined by comparison with published sequences. Homology between the consensus and *G. margarita* sequence was measured as the fraction of nucleotides in the *G. margarita* sequence shared by the consensus. In the 156 nucleotides from position 81 (the 3' end of ITS1) to position 236 there was high divergence in ITSA sequences and the consensus showed ~20% agreement with the *G. margarita* spacer. Strong homology was found between sequences in the subsequent 161 nucleotides (237-397) covering the greater portion of the aligned 5.8S rRNA genes and the consensus showed 90% agreement with the *G. margarita* sequence. ITSB sequences showed high divergence with ~28% agreement between the consensus and *G. margarita* sequence.

```
                                                                  50
AAGGATCATT ACCGAGTGCG GGCTGCCTCC GGGSSGCCCA ACCTCCCACC
                                                                 100
CGTGACTACC TAACACTGTT GCTTCGCGGG GAGCCAGGCC AGGGCGSSGA
                                                                 150
CCACTGAACT TCATGCCTGA GAGTGATGCA GTCTGAGCCT GAATACAAAT
                                          186
CAGTCAAAAC TTTCAACAAT GGATCTCTTG GTTCCG
```

Figure 4: Nucleotide Sequence of Plasmid Insert Amplified from *G. margarita* with PCR Primers *B*-ITS1 and *E*-ITS2

Primer annealing sites omitted. For ambiguous nucleotides S = G or C.

```
                                                                  50
GAACTGGATA AGTAATGTGA ATTGCAGAAT TCAGTGAATC ATCGAGTCTT
                                                                 100
TGAACGCACA TTGCGCCCCC TGGCATTCCG GGGGGCATGC CTGTCCGAGC
                                                                 150
GTCATTGCTG CCCTCAAGCC CGGCTTTGTG TGTTGGGTCG TCGTCCCCCC
                                                                 200
CGGGGGACGG CCCGAAAGGC AGCGGCGGCA CGTGTCCGGT CCTCGAGCGT
                                                                 250
ATGGGGCTTT GTCACCCGCT CGATTAGGSS GCCCGGGCCA GCCGSCGTCT
                                          288
CCAACCTTAT TTTTCTCAGG TTGACCCGCT GAACTTAA
```

Figure 5: Nucleotide Sequence of Plasmid Insert Amplified from *G. margarita* with PCR Primers *B*-ITS3 and *E*-ITS4

Primer annealing sites omitted. *Eco*RI site (position 27 to 32) in bold. For ambiguous nucleotides S = G or C.

```
                                                                  50
TCCGTAGGTG AACCTGCGGA AGGATCATTA CCGAGTGCGG GCTGCCTCCG
                                                                 100
GGSSGCCCAA CCTCCCACCC GTGACTACCT AACACTGTTG CTTCGCGGGG
                                                                 150
AGCCAGGCCA CGGCGSSGAC CACTGAACTT CATGCCTGAG AGTGATGCAG
                                                                 200
TCTGAGCCTG AATACAAATC AGTCAAAACT TTCAACAATG GATCTCTTGG
                                                                 250
TTCCGGCATC GATGAAGAAC GCAGCGAACT GGATAAGTAA TGTGAATTGC
                                                                 300
AGAATTCAGT GAATCATCGA GTCTTTGAAC GCACATTGCG CCCCCTGGCA
                                                                 350
TTCCGGGGGG CATGCCTGTC CGAGCGTCAT TGCTGCCCTC AAGCCCGGCT
                                                                 400
TTGTGTGTTG GGTCGTCGTC CCCCCCGGGG GACGGCCCGA AAGGCAGCGG
                                                                 450
CGGCACGTGT CCGGTCCTCG AGCGTATGGG GCTTTGTCAC CCGCTCGATT
                                                                 500
AGGSSGCCCG GGCCAGCCGS CGTCTCCAAC CTTATTTTTC TCAGGTTGAC
                                          533
CCGCTGAACT TAAGCATATC AATAAGCGGA GGA
```

Figure 6: Composite Nucleotide Sequence (+ Strand) of *G. margarita* 5.8S rRNA Gene and Flanking Internal Transcribed Spacers

Primers ITS1 (position 1 to 19), ITS3 (position 206 to 225) and sequence complementary to primer ITS4 (position 514 to 533) underlined. For ambiguous nucleotides S = G or C.

Using data generated by the PRETTY sequence alignment, spacers flanking the 5.8S rRNA genes were examined and a unique succession of 20 to 30 nucleotides in each spacer of *G. margarita* was identified and sent to The University of Georgia where primers were manufactured. The new primers, GMITS5 and GMITS6, were used in PCR mixtures with plasmids containing rDNA inserts as templates. Spores of the following VA mycorrhizal fungi (isolate numbers in brackets) were received from the International Culture Collection of Arbuscular and Vesicular-arbuscular Mycorrhizal Fungi (INVAM), which was now located at the Division of Plant and Soil Sciences, West Virginia University, West Virginia: *G. margarita* (WV205A-2), *G. margarita* (BR444-2), *G. decipiens* (AU102-2), *G. rosea* (FL219A) and *G. rosea* (UT102-2). DNA prepared from these spores was used as templates in PCR mixtures with primers GMITS5 and GMITS6.

Primers derived from the PRETTY alignment were:

(1) GMITS5 from ITSA (5'CTACCTAACACTGTTGCTTCGCGGG) (bases 75 to 99 in Figure 6) and (2) GMITS6 from ITSB (5'GCCCCATACGCTCGAGGACCGGACA) (complement of bases 408 to 432 in Figure 6)

Lengths of sequences for GMITS5 and GMITS6 were chosen so that their annealing temperatures would be close to those of the other primers in use. These primers were used in combination with other primers (GMITS5 with *E*-ITS2 and *B*-ITS3 with GMITS6) to amplify regions from plasmids containing appropriate inserts. Primer pairs GMITS5+*E*-ITS2 amplified a fragment of ~140 bp from a plasmid containing the *B*-ITS1+*E*-ITS2 amplified fragment, while primer pairs *B*-ITS3+GMITS6 amplified a fragment of ~110 bp from a plasmid containing the *B*-ITS3+*E*-ITS4 fragment. Conditions for these reactions were the same as previously and sizes of amplified fragments from plasmids were as expected. Template DNA from *G. margarita*, *G. decipiens* and *G. rosea* isolates (INVAM) and GMITS5+GMITS6 primers gave no amplification products.

Impact, Relevance and Technology Transfer:

The findings from this project will not be of any immediate benefit to Barbados. Awareness of the potential benefits that could be obtained from the determinate use of VA mycorrhizal fungi in agriculture has led to presentations at a Barbadian agricultural technologists forum on agrochemical importation costs to Barbados and the effects that those agrochemicals can have on native VA mycorrhizal fungi. It has also been proposed that VAM fungal inocula could be utilised in the numerous Caribbean plant tissue culture laboratories and plant nursery operations. Additionally, the importance of determining the species of VA mycorrhizal fungi and their distribution in Caribbean soils has been stressed. So, while the molecular genetic approaches attempted in this project will not be translated into an instantaneous advantage for the region, a conscious appreciation of the latent benefits that these microorganisms could afford to sustainability in agriculture has been fostered.

The project has impacted meaningfully on a number of individuals and especially on two postgraduate students who have successfully completed their Ph.D. degrees. These and other team members have benefitted from attendance and exposure at international conferences and from temporary immersion in workshops and other laboratories. New collaborative channels have emerged and have been subsequently maintained. Increased output from this laboratory as a direct result of this project and the publication of the first two, truly biotechnological Ph.D. theses from U.W.I. serves to enhance the reputation of the Department of Biology within U.W.I. and the reputation of U.W.I. within the Caribbean region and beyond.

The results from the project are being, and will be, utilised by the growing international scientific community engaged in research into mycorrhizas. This will be dependent on our continued ability to disseminate the results into the public domain, particularly in the primary scientific literature. To this end a number of manuscripts are in preparation. Interest in our results has already been expressed by the external examiners for the two Ph.D. theses as well as by other international experts in the field, who have requested pre/reprints of our publications and references for our graduate students for postdoctoral positions.

This project was of a pure research rather than a developmental nature and consequently no trials were conducted that could lead to increases in scale.

This USAID/PSTC project has made a tremendous difference in scientific capability within the Department of Biology at the Cave Hill Campus of U.W.I. This is not only due to the direct financial input from the grant but also there have been a number of ancillary benefits, particularly the ability to access in-house sources of funding for laboratory remodelling, the purchase of additional equipment items and for travel and training. There have also been improvements in library and communication support services.

The Department of Biology now has the capacity for PCR DNA amplification, which is one of the most powerful technologies in molecular genetics. This capability is housed in laboratories that were redesigned and refitted to comply, as closely as possible, with U.S. NIH guidelines. Although the laboratory upgrading was funded by U.W.I., it was consequential upon receipt of the USAID/PSTC grant and followed from a strong recommendation from Professor W.E. Timberlake and Dr. M.A. Marshall, the U.S. collaborators on the project. The Department of Biology also now has the capacity for ultracentrifugation up to 70,000 rpm, which has facilitated caesium chloride, density-gradient centrifugation for DNA isolation as well as other high-speed centrifugation techniques.

The capacity for PCR is due to the purchase of a Precision Scientific GTC-2 Genetic Thermal Cycler from this USAID/PSTC grant and the subsequent purchase by the Department of Biology of a Hybaid Omnigene Thermal Cycler. Centrifugation capacity was significantly enhanced by the purchase of a Beckman Instruments L8-70M ultracentrifuge plus 70.1Ti and SW40Ti rotors and accessories from this USAID/PSTC grant.

The only other equipment left behind in the developing country that directly results from the USAID/PSTC grant is an NEC ProSpeed 286 laptop computer and an NEC MultiSync 2A colour monitor. These have received extensive use throughout the course of the project and are now reaching the end of their working lives.

The principal investigator has been able to access previously untapped, in-house sources of funding following the award of the USAID/PSTC grant. This has facilitated the purchase of a number of laboratory equipment items, such as fridges and freezers.

The influx of equipment and expertise along with the improved laboratory, library and communication facilities have rapidly and dramatically improved the scientific capabilities of this research team. Additionally, the excellent assistance provided by the U.S. collaborators cannot be overemphasised. It was also gratifying when this association spawned a second research effort in the area of heterokaryon incompatibility in *Aspergillus nidulans* so that a genuinely two-way collaboration could be initiated.

<u>Project Activities/Output</u>:

a. **Meetings attended:**

1. Fourth Conference of the International Plant Biotechnology Network. San José, Costa Rica. January, 1991.

2. Plant biotechnology networking meeting of Latin American and Caribbean USAID/PSTC grantees. San José, Costa Rica. January, 1991.

3. Fifth International Fungal Spore Conference. Helen, Georgia, U.S.A. August, 1991.

4. Third European Conference on Mycorrhizas. Sheffield, U.K. August, 1991.

5. Biological Nitrogen Fixation Networking Workshop. Networking meeting of USAID/PSTC grantees. Banff, Canada. September, 1991.

6. Third Caribbean Biotechnology Network Conference. Mona, Jamaica. July, 1992.

7. First European Conference on Fungal Genetics. Nottingham, U.K. August, 1992.

8. Tenth Annual Conference of the Barbados Society of Technologists in Agriculture. Bridgetown, Barbados. November, 1992.

9. Ninth North American Conference on Mycorrhizae. Guelph, Ontario, Canada. August, 1993.

10. Seventeenth International Congress of Genetics. Genetics and the Understanding of Life. Birmingham, U.K. August, 1993.

b. Conference Presentations:

Dales, R.B.G., Chinnery, L.E., Michelini, S., Waterman, L.D., Persad-Chinnery, S.B., Marshall, M.A. and Timberlake, W.E. Towards the development of a transformation system for a mycorrhizal fungal species of the genus *Gigaspora*. Poster. Fourth Conference of the International Plant Biotechnology Network. San José, Costa Rica. January, 1991.

Dales, R.B.G., Chinnery, L.E., Michelini, S., Waterman, L.D., Persad-Chinnery, S.B., Marshall, M.A. and Timberlake, W.E. Towards the development of a transformation system for a mycorrhizal fungal species of the genus *Gigaspora*. Plant biotechnology networking meeting of Latin American and Caribbean USAID/PSTC grantees. San José, Costa Rica. January, 1991.

Waterman, L.D., Persad-Chinnery, S.B., Chinnery, L.E., Michelini, S., Marshall, M.A., Timberlake, W.E. and Dales, R.B.G. Genetical approaches to the study of vesicular-arbuscular mycorrhizal fungal spores of the genus *Gigaspora*. Poster. Fifth International Fungal Spore Conference. Helen, Georgia, U.S.A. August, 1991.

Persad-Chinnery, S.B., Waterman, L.D., Chinnery, L.E., Michelini, S., Marshall, M.A., Timberlake, W.E. and Dales, R.B.G. Cytological investigation of nuclear division within germ-tubes and hyphae of the vesicular-arbuscular mycorrhizal (VAM) fungus *Gigaspora decipiens*. Poster. Third European Conference on Mycorrhizas. Sheffield, U.K. August, 1991.

Waterman, L.D., Persad-Chinnery, S.B., Michelini, S., Chinnery, L.E., Marshall, M.A., Timberlake, W.E. and Dales, R.B.G. Genetical approaches to the study of vesicular-arbuscular mycorrhizal fungal spores of the genus *Gigaspora*. Oral and poster presentations. Biological Nitrogen Fixation Networking Workshop. Networking meeting of USAID/PSTC grantees. Banff, Canada. September, 1991.

Persad-Chinnery, S.B. and Dales, R.B.G. Developing a gene transfer system for vesicular-arbuscular (VA) mycorrhizal fungi of the genus *Gigaspora* (Zygomycetes, Glomales). Third Caribbean Biotechnology Network Conference. Mona, Jamaica. July, 1992.

Waterman, L.D. and Dales, R.B.G. Protoplast isolation and amplification of ribosomal DNA from VAM fungi of the genus *Gigaspora*. Third Caribbean Biotechnology Network Conference. Mona, Jamaica. July, 1992.

Dales, R.B.G., Persad-Chinnery, S.B., Waterman, L.D., Chinnery, L.E., Marshall, M.A. and Timberlake, W.E. Genetical approaches to the study of vesicular-arbuscular mycorrhizal fungi of the genus *Gigaspora*. Poster. First European Conference on Fungal Genetics. Nottingham, U.K. August, 1992.

Persad-Chinnery, S.B., Dales, R.B.G. and Chinnery, L.E. Do pesticide use and farming practices reduce the agronomic benefits of vesicular-arbuscular (VA) mycorrhizal fungi in Barbados? Tenth Annual Conference of the Barbados Society of Technologists in Agriculture. Bridgetown, Barbados. November, 1992.

Waterman, L.D., Persad-Chinnery, S.B., Chinnery, L.E. and Dales, R.B.G. Sequence analysis of rDNA regions in *Gigaspora margarita*. Poster. Ninth North American Conference on Mycorrhizae. Guelph, Ontario, Canada. August, 1993.

Waterman, L.D., Persad-Chinnery, S.B., Chinnery, L.E. and Dales, R.B.G. Analysis of rDNA sequences in *Gigaspora margarita*. Poster. Seventeenth International Congress of Genetics. Genetics and the Understanding of Life. Birmingham, U.K. August, 1993.

c. **Refereed or Edited Publications:**

Persad-Chinnery, S.B., Chinnery, L.E. and Dales, R.B.G. (1992) Enhancement of *in vitro* spore germination of *Gigaspora rosea* by a cellulase preparation. *Mycological Research* 96, 626 - 628.

Persad-Chinnery, S.B., Dales, R.B.G. and Chinnery, L.E. (1992) Do pesticide use and farming practices reduce the agronomic benefits of vesicular-arbuscular (VA) mycorrhizal fungi in Barbados? In *Proceedings of the Tenth Annual Conference of the Barbados Society of Technologists in Agriculture*. pp. 43 - 55. Ed. H. De Boer. BSTA.

Persad-Chinnery, S.B. and Dales, R.B.G. (1993) Developing a gene transfer system for vesicular-arbuscular (VA) mycorrhizal fungi of the genus *Gigaspora* (Zygomycetes, Glomales). In *Proceedings of the Third Caribbean Biotechnology Conference*. pp. 69 - 74. Ed. S. Laurent. UNESCO Sub-Regional Office for Science and Technology for the Caribbean, Port-of-Spain, Trinidad and Tobago.

Waterman, L.D. and Dales, R.B.G. (1993) Protoplast isolation and amplification of ribosomal DNA from VAM fungi of the genus *Gigaspora*. In *Proceedings of the Third Caribbean Biotechnology Conference*. pp. 75 - 81. Ed. S. Laurent. UNESCO Sub-Regional Office for Science and Technology for the Caribbean, Port-of-Spain, Trinidad and Tobago.

d. **Published Abstracts:**

Dales, R.B.G., Chinnery, L.E., Michelini, S., Waterman, L.D., Persad-Chinnery, S.B., Marshall, M.A. and Timberlake, W.E. (1991) Towards the development of a transformation system for a mycorrhizal fungal species of the genus *Gigaspora*. In *Abstracts of the Fourth Conference of the International Plant Biotechnology Network*. Colorado State University.

Persad-Chinnery, S.B., Waterman, L.D., Chinnery, L.E., Michelini, S., Marshall, M.A., Timberlake, W.E. and Dales, R.B.G. (1991) Cytological investigation of nuclei within germ-tubes and hyphae of the vesicular-arbuscular mycorrhizal (VAM) fungus *Gigaspora decipiens*. In *Third European Symposium on Mycorrhizas. Mycorrhizas in Ecosystems - Structure and Function. Abstracts*. University of Sheffield.

Waterman, L.D., Persad-Chinnery, S.B., Chinnery, L.E., Michelini, S., Marshall, M.A., Timberlake, W.E. and Dales, R.B.G. (1991) Genetical approaches to the study of vesicular-arbuscular mycorrhizal fungal spores of the genus *Gigaspora*. In *Fifth International Fungal Spore Conference*. p.37. The University of Georgia.

Waterman, L.D., Persad-Chinnery, S.B., Michelini, S., Chinnery, L.E., Marshall, M.A., Timberlake, W.E. and Dales, R.B.G. (1991) Genetical approaches to the study of vesicular-arbuscular mycorrhizal fungal spores of the genus *Gigaspora*. In *Biological Nitrogen Fixation Networking Workshop*. pp. 35-36. United States Agency for International Development.

Waterman, L.D., Persad-Chinnery, S.B., Chinnery, L.E. and Dales, R.B.G. (1993) Sequence analysis of rDNA regions in *Gigaspora margarita*. In *Abstracts of Oral and Poster presentations of the Ninth North American Conference on Mycorrhizae*. p. 153. Eds. L. Peterson and M. Schelkle. Nacom 9, University of Guelph.

Waterman, L.D., Persad-Chinnery, S.B., Chinnery, L.E. and Dales R.B.G. (1993) Analysis of rDNA sequences in *Gigaspora margarita*. In *Volume of Abstracts. Seventeenth International Congress of Genetics. Genetics and the Understanding of Life*. p. 191. XVIIth International Congress of Genetics.

e. Theses:

Persad-Chinnery, S.B. (1995) Biological studies of the vesicular-arbuscular (VA) mycorrhizal fungi *Gigaspora decipiens* and *G. rosea*. Ph.D. thesis of the University of the West Indies.

Waterman, L.D. (1995) Sequence analysis of ribosomal DNA amplification products and investigations on protoplast isolation from vesicular-arbuscular mycorhizal fungi of the genus *Gigaspora*. Ph.D. thesis of the University of the West Indies.

f. **DNA Database submissions:**

Three *Gigaspora margarita* sequences were submitted to the GenBank DNA database. These sequences were generated by PCR amplification using primers ITS1, 2, 3 and 4 that were designed (White *et al.*, 1990) to amplify the 5.8S rRNA gene and flanking Internal Transcribed Spacer (ITS) regions of the ribosomal DNA repeat of fungi. These sequences are presented in the Methods and Results section, page 21. The GenBank sequence designations and corresponding accession numbers are:

DNA Sequence		Accession Number
GM ITS1-4	-	U15692
GM ITS1-2	-	U16755
GM ITS3-4	-	U16756

g. **Patents:**

None.

h. **Training:**

There was no formal training defined in the project budget. During the course of the project, however, a number of activities were undertaken from which training in a range of areas was obtained. Not all of these activities were funded from the grant as additional funding was provided by BOSTID and U.W.I.

i. 14 July - 24 August, 1991. Lyndon Waterman visited Professor W.E. Timberlake's laboratory in the Department of Genetics, The University of Georgia, Athens, Georgia, U.S.A. for experience in Polymerase Chain Reaction (PCR) DNA amplification and DNA sequencing techniques.

ii. 13 August - 17 August, 1991. Susan Persad-Chinnery attended the pre-Symposium workshop prior to the Third European Symposium on Mycorrhizas, The University of Sheffield. This workshop was on identification and classification of Glomaceous (VAM) fungi.

iii. 17 August - 15 September, 1991. Dr. Richard Dales visited Professor Timberlake's laboratory and gained experience with a number of recent techniques in molecular genetics, including genomic DNA cloning using Yeast Artificial Chromosome (YAC) vectors and Contour-Clamped Homogeneous Electric Field (CHEF) pulsed-field gel electrophoresis.

iv. 8 September - 18 September, 1991. Susan Persad-Chinnery attended a training course in 'Techniques in Plant Molecular Biology' held at Wye College, The University of London, U.K.

v. 15 March - 30 April, 1993. Susan Persad-Chinnery visited Prof. W.E. Timberlake's laboratory and performed genomic DNA library construction and polymerase chain reaction (PCR) DNA amplification.

vi. 5 August - 8 August, 1993. Lyndon Waterman attended a pre-conference workshop prior to the Ninth North American Conference on Mycorrhizae, Guelph, Ontario, Canada. This workshop was on molecular methods for the identification of mycorrhizal fungi.

All of the above information indicates that: a. the project was extremely valuable for the Department of Biology, Cave Hill Campus, U.W.I. in terms of the acquisition of technical expertise, particularly in modern biotechnological methodologies, and b. there is strong evidence of the desire to disseminate the results of the project, with 12 conference presentations, four refereed or edited publications, three GenBank DNA sequence submissions, and two Ph.D. theses. Additionally, it is anticipated that a number of further publications in refereed journals will emerge from the two Ph.D. theses in the near future.

Project Productivity:

Specific Objective: 1. *To develop methods for the routine production of non-contaminated VAM fungal hyphae.* Goal accomplished. This work is reported in chapter 3 of S.B. Persad-Chinnery's Ph.D. thesis, pp. 46-66 and in chapter 3 of L.D. Waterman's Ph.D. thesis, pp. 121-158.

Specific Objective: 2. *To establish enzyme systems and conditions for efficient protoplast release from VAM fungal hyphae.* This area was extensively studied but the objective of developing protoplast technology with *Gigaspora* spp. was not attained. Hyphae of germinated spores of *Gigaspora* spp. proved to be resistant to degradation by high concentrations of mixtures of commercial lytic enzymes in conjunction with culture extracts containing chitosanase prepared from *Bacillus pumilus* or *Streptomyces* no. 6. Walls of Zygomycetes are known to contain chitosan and lytic enzymes from *Bacillus pumilus* or *Streptomyces* no. 6 have been used to produce protoplasts from members of this taxon. In the same series of experiments in this sub-project, hyphal walls of another Zygomycete, *Rhizopus stolonifer*, were readily digested to liberate protoplasts in enzyme mixtures containing small amounts of the extract from the *Streptomyces* culture. Resistance of hyphae of *Gigaspora* spp. to degradation with lytic enzyme from *Streptomyces* no. 6 could be due to absence of chitosan in the hyphal walls, unreactivity of the form of chitosan in the walls with the prepared enzyme, or concealment of chitosan by other wall components.

The inability to generate protoplasts from *Gigaspora* spp. using cocktails of hydrolytic enzymes was unexpected and surprising. However, the delimitation of several combinations of lytic enzymes that do not produce protoplasts from hyphae of VA mycorrhizal fungi provides a knowledge base for additional research in this area. Further knowledge of the biochemical composition of, arrangement of polymers in, as well as bonding of components in walls of extraradical hyphae may provide the information necessary for formulation of effective enzyme cocktails for protoplast production.

The experiments performed, the results obtained and the suggestions for future approaches are described in detail and extensively discussed in chapter 4 of the Ph.D. thesis of L.D. Waterman, pp. 159-200.

Specific Objective: 3. *To investigate the nuclear division cycle in VA mycorrhizas.* Goal accomplished. This work is reported in chapters 4 and 5 of S.B. Persad-Chinnery's Ph.D. thesis, pp. 67-160.

Specific Objective: 4. *To isolate genomic DNA from VAM fungal hyphae or protoplast suspensions.* Goal accomplished. It was found that DNA could be readily isolated from spores. This work is reported as part of chapter 7 of S.B. Persad-Chinnery's Ph.D. thesis, pp. 185-190 and as part of chapter 5 of L.D. Waterman's Ph.D. thesis, pp. 212-217.

Specific Objective: 5. *To develop gene transfer technology for a VAM fungus of the genus Gigaspora.* This was the most ambitious specific objective, involving the cumulative knowledge and expertise from all the preceding sub-projects plus additional molecular genetic research. Extensive work was done to determine a suitable selectable marker for transformation; to construct a plasmid vector that carried the selectable marker, driven by a fungal promoter; and to isolate a high-efficiency, *Gigaspora*-specific promoter sequence. These research projects are reported in chapters 6 and 7 and appendices B and C of S.B. Persad-Chinnery's Ph.D. thesis, pp. 161-216 and 251-272. Problems encountered during this work

ultimately leading to exhaustion of available time, along with the lack of protoplast technology for a *Gigaspora* spp. served to frustrate the accomplishment of this goal.

Specific Objective: 6. *To utilise the Polymerase Chain Reaction (PCR) for identifying and monitoring VAM fungal DNA.* **Goal accomplished.** This work is reported in chapter 5 and the appendices of L.D. Waterman's Ph.D. thesis, pp. 201-250 and 307-315.

While the ultimate goal of achieving gene transfer technology for a VA mycorrhizal fungus was not achieved, a vast amount of highly-significant, background research has been successfully completed. This project has extensively increased the understanding of VA mycorrhizal fungi and the future direction for the eventual completion of this project has been charted. By the use of techniques that are close to the cutting edge of molecular genetics, it has catapulted this developing-country laboratory to the forefront of international VAM fungal research.

Future Work:

This project could lead to future work if suitable funding can be found. To date, two major grant proposals have been submitted. The first entitled: '*Molecular Biology and Ecology of Plant-Microbial Associations*' was forwarded to the European Community Regional Programme - Project on Agricultural Biotechnology by the Government of Jamaica. This proposal was for funding sub-projects to be conducted by Principal Investigators at the Cave Hill Campus, U.W.I. These were '*Monitoring vesicular-arbuscular mycorrhizal fungi*' (Dr. R.B.G. Dales) and '*Genetic stimulation of purine and ureide synthesis in nodules of transgenic legumes*' (Dr. A.J. Delauney). These were to dovetail with other sub-projects to be conducted in the Biotechnology Centre of the Mona Campus, U.W.I., Jamaica (Dr. M.H. Ahmad) and the Laboratory for Plant and Microbial Biotechnology, Philipps University Marburg, Germany (Prof. Dr. D. Werner).

The second proposal was through the U.W.I. Research and Development Fund to access Inter-American Development Bank funding. The project - '*Monitoring vesicular-arbuscular mycorrhizal (VAM) fungi having potential for plant biofertilisation, by species-specific DNA amplification*' was to be coordinated by Dr. R.B.G. Dales. Other Principal Investigators being Dr. L.E. Chinnery and Dr. A.J. Delauney at the Cave Hill Campus, U.W.I.

I have documented these project proposals as they represent a significant amount of time and effort in their preparation. They were of reasonably high scientific merit, yet both have been unsuccessful. This highlights a major problem for researchers in developing countries. It is often extremely difficult to find and access funding sources to continue USAID/PSTC grant aided research.

Both of the above proposals were to use PCR approaches for monitoring VA mycorrhizal fungi but future work could also include efforts to complete the development of gene transfer technology. The potential for inverse PCR to isolate the promoter region from the *Gigaspora* actin gene, advanced in this project, could be realised. A *Gigaspora*-specific transformation vector could then be constructed by replacing the *Aspergillus nidulans trpC* promoter with the *Gigaspora* actin gene promoter, upstream of the hygromycin B phosphotransferase gene on the plasmid pSPC1. Further work could be done towards the development of protoplast technology and once protoplasts were successfully liberated they could be used for transformation with the *Gigaspora*-specific transformation vector. Studies of protoplast regeneration would also be necessary. In the absence of protoplast technology, transformation could be attempted via biolistic methods.

Literature Cited:

Adolphe, Z. and Gianinazzi-Pearson, V. (1993) In *Abstracts of the 9th North American Conference on Mycorrhizae*, p. 112, Guelph, Canada.

Atkinson, G.F. (1918) *Brooklyn Botanic Garden Memoirs* 1, 1-17.

Barnitz, J.T., Cramer, J.H., Rownd, R.H., Cooley, L. and Söll, D. (1982) *Federation of European Biochemical Societies Letters* 143, 129-132.

Barrett, V., Dixon, R.K. and Lemke, P.A. (1990) *Applied Microbiology and Biotechnology* 33, 313-316.

Bartnicki-Garcia, S. (1968) *Annual Review of Microbiology* 22, 87-108.

Baura, G., Szaro, T.M. and Bruns, T.D. (1992) *Mycologia* 84, 592-597.

Bécard, G. and Fortin, J. A. (1988) *New Phytologist* 108, 211-218.

Bej, A.K., Mahbubani, M.H. and Atlas, R.M. (1991) *Critical Reviews in Biochemistry and Molecular Biology* 26, 301-334.

Bruns, T.D., White, T.J. and Taylor, J.W. (1991) *Annual Review of Ecology and Systematics* 22, 525-564.

Burggraaf, J.P. and Beringer, J.E. (1989) *New Phytologist* 111, 25-33.

Burmester, A. (1992) *Current Genetics* 21, 121-124.

Carbone, I. and Kohn, L.M. (1993) *Mycologia* 85, 415-427.

Egger, K.N. and Sigler, L. (1993) *Mycologia* 85, 219-230.

Embly, T.M. (1991) *Letters in Applied Microbiology* 13, 171-174.

Engelke, D.R., Hoener, P.A. and Collins, F.S. (1988) *Proceedings of the National Academy of Sciences U.S.A.* 85, 544-548.

Free, S.J., Rice, P.W. and Metzenberg, R.L. (1979) *Journal of Bacteriology* 137, 1219-1226.

Gallwitz, D and Seidel, R. (1980) *Nucleic Acid Research* 8, 1043-1059.

Gardes, M., White, T.J., Fortin, J.A., Bruns, T.D. and Taylor, J.W. (1991) *Canadian Journal of Botany* 69, 180-190.

Gyllensten, U.B. and Erlich, H.A. (1988) *Proceedings of the National Academy of Sciences U.S.A.* 85, 7652-7656.

Harley, J.L. and Smith, S.E. (1983) *Mycorrhizal Symbiosis*. London: Academic Press Inc.

Hightower, R.C. and Meagher, R.B. (1986) *Genetics* 114, 315-332.

Isaac, S. and Gokhale, A.V. (1982) *Transactions of the British Mycological Society* 78, 389-394.

Kiuchi, N., Naruse, A., Yamamoto, H. and Sekiguchi, J. (1991) *Agricultural and Biological Chemistry* 55, 3053-3057.

Koske, R.E. (1982) *Transactions of the British Mycological Society* 79, 305-310.

Mauseth, J.D. (1991) *Botany: An Introduction to Plant Biology*. Saunders College Publishing, FL, U.S.A.

McCabe, P.C. (1990) In *PCR Protocols: A Guide to Methods and Applications*, pp. 76-83. Edited by M.A. Inniss, D.H. Gelfand, J.S. Sninsky and T.J. White. New York: Academic Press Inc.

McCully, E.K. and Robinow, C.F. (1973) *Archiv fur Mikrobiologie* 94, 133-148.

McKerracher, L.J. and Heath, I.B. (1987) *Experimental Mycology* 11, 79-100.

Metzenberg, R.L. (1991) *Mycological Research* 95, 9-13.

Mitchell, T.G., White, T.J. and Taylor, J.W. (1992) *Journal of Medical and Veterinary Mycology* 30, 207-218.

Mullis, K., Faloona, F., Scharf, S., Saiki, R., Horn, G. and Erlich, H. (1986) *Cold Spring Harbor Symposia on Quantitative Biology* 51, 263-273.

Murray, F.R., Latch, G.C.M. and Scott, D.B. (1992) *Molecular and General Genetics*, 233, 1-9.

Ochman, H., Medhora, M.M., Garza, D. and Hartl, D.L. (1990) In *PCR Protocols: A Guide to Methods and Applications*, pp. 219-227. Edited by M.A. Innis, D.H. Gelfand, J.J. Sninsky and T.J. White. New York: Academic Press Inc.

O'Donnell, K. (1992) *Current Genetics* 22, 213-220.

Paithankar, K.R. and Prasad, K.S.N. (1991) *Nucleic Acids Research* 19, 1346.

Pollock, K., Barfield, D.G. and Shields, R. (1983) *Plant Cell Reports* 2, 36-39.

Reece, K.S., McElroy, D. and Wu, R. (1992) In *Evolutionary Biology*, pp. 1-34. Edited by M.K. Hecht. New York: Plenum Press.

Revuetta, J.L. and Jayaram, M. (1986) *Proceedings of the National Academy of Science, U.S.A.* **83**, 7344-7347.

Robinow, C.F. (1957a) *Canadian Journal of Microbiology* **3**, 771-789.

Robinow, C.F. (1957b) *Canadian Journal of Microbiology* **3**, 791-798.

Ruano, G. and Kidd, K.K. (1991) *Proceedings of the National Academy of Sciences U.S.A.* **88**, 2815-2819.

Saiki, R.K., Scharf, S., Faloona, F., Mullis, K.B., Horn, G.T., Erlich, H.A. and Arnheim, N. (1985) *Science* **230**, 1350-1354.

Saiki, R.K., Bugawan, T.D., Horn, G.T., Mullis, K.B. and Erlich, H.A. (1986) *Nature* **324**, 163-166.

Sambrook, J., Fritsch, E.F. and Maniatis, T. (1989) *Molecular Cloning: A Laboratory Manual*. Second Edition. New York: Cold Spring Harbour Laboratory Press.

Sansome, E.R. (1989) Evolutionary Biology of Fungi. Symposium of the British Ecological Society 1986. Edited by A.D.M. Rayner, C.M. Brasier and D. Moore, Cambridge University Press, U.K.

Scharf, S.J. (1990) In *PCR Protocols: A Guide to Methods and Applications*, pp. 84-91. Edited by M.A. Inniss, D.H. Gelfand, J.S. Sninsky and T.J. White. New York: Academic Press Inc.

Schweizer, E., MacKechnie, C. and Halvorson, H.O. (1969) *Journal of Molecular Biology* **40**, 261-277.

Suavez, T. and Esalva, A.P. (1988) *Molecular and General Genetics* **212**, 120-123.

Van de Peer, Y., Neefs, J.-M., De Rijk, P., De Baere, R., Goris, A., Hendriks, L. and De Wachter, R. (1992) *Belgian Journal of Botany* **125**, 174-190.

Ward, D.M., Bateson, M.M., Weller, R. and Ruff-Roberts, A.L. (1992) *Advances in Microbial Ecology* **12**, 219-286.

White, T.J., Bruns, T., Lee, S. and Taylor, J. (1990) In *PCR Protocols: A Guide to Methods and Applications*, pp. 315-322. Edited by M.A. Inniss, D.H. Gelfand, J.S. Sninsky and T.J. White. New York: Academic Press Inc.

Wnendt, S., Jacobs, M. and Stahl, U. (1990) *Current Genetics* **17**, 21-24.

Yanai, K., Horiuchi, H., Takagi, M. and Yano, K. (1990) *Agricultural and Biological Chemistry* **54**, 2689-2696.

Zar, J.H. (1984) *Biostatistical Analysis*. 2nd edition. Prentice-Hall, New Jersey, U.S.A.

Appendices:

Enhancement of *in vitro* spore germination of *Gigaspora rosea* by a cellulase preparation

S. B. PERSAD-CHINNERY, L. E. CHINNERY AND R. B. G. DALES

Department of Biology, The University of the West Indies, P.O. Box 64, Bridgetown, Barbados

Solutions of a cellulase preparation from *Trichoderma reesei* have been found to induce *in vitro* germination of asexual spores of the vesicular–arbuscular mycorrhizal (VAM) fungus *Gigaspora rosea*. Spores were incubated in cellulase at concentrations of 1·6, 3·2, 4·8 and 6·4 units ml^{-1} or in distilled water (pH 6·4). Each treatment was applied to 100 spores divided between five replicate blocks. In the cellulase concentration of 3·2 units ml^{-1}, 89% of the spores germinated, which was five times greater than that in the cellulase-free control. In the 1·6 units ml^{-1} concentration, 48% of the spores germinated, which was more than twice that of the control. The germination percentages in 4·8 and 6·4 units ml^{-1} concentrations were not significantly different from the control. Whether this effect is due to cellulase or an impurity in the preparation has not been established. The technique, however, provides a method for obtaining improved *in vitro* germination of the spores of at least two *Gigaspora* species.

The order Glomales (Morton & Benny, 1990) consists of six genera that form mutualistic associations with the roots of almost all angiosperms. These fungi have been traditionally described as the vesicular–arbuscular mycorrhizal (VAM) fungi even though species of the genera *Gigaspora* and *Scutellospora* do not form intraradical vesicles. VAM fungi are obligate symbionts that have been shown to increase growth and nutrient uptake, particularly of phosphates (Smith, 1980); reproduction (Koide *et al.*, 1988); drought tolerance (Michelsen & Rosendahl, 1990); and resistance to pathogens (Caron, 1989) in the host plant.

Germination studies on the asexually produced spores of VAM fungi have produced variable results. Initial work suggested that storage was necessary to overcome dormancy present in freshly harvested spores (Godfrey, 1957) or that microbially produced soil substances were needed for germination (Mosse, 1959). Since then, the need for a period of dormancy has been reported by other authors (Daniels & Graham, 1976; Hepper & Smith, 1976; Tommerup, 1983*a,b*; Safir *et al.*, 1990) and several additional factors have been reported to affect spore germination. These include small quantities of nutrients, root exudates, root volatiles, soil temperature, moisture, pH and light (e.g. Daniels-Hetrick, 1984; Siqueira *et al.*, 1985; Gemma & Koske, 1988). The reported effects of some of these factors have been found to vary between genera and species of VAM fungi. In an attempt to determine specific compounds capable of inducing spore germination, Gianinazzi-Pearson, Branzanti & Gianinazzi (1989) showed that the flavonoids apigenin, hesperitin and naringenin stimulated early *in vitro* germination of *Gigaspora margarita* Becker & Hall spores but no significant increases in germination above the controls were observed. Bacteria have been reported to enhance the germination of VAM fungal spores (e.g. Mosse, 1962; Azcon, 1989; Will & Sylvia, 1990). The presence of bacteria, however, may not be desirable for many studies of VAM fungi.

Attempts to promote the germination of VAM fungal spores using enzymes have not been extensive. Spores of *Endogone microcarpa* (Tul. & Tul.) Tul. & Tul. (= *Glomus microcarpum* Tul. & Tul.) and *E. macrocarpa* (Tul. & Tul.) Tul. & Tul. (= *Gl. macrocarpum* Tul. & Tul.) have been passed through mouse, rabbit, chick or snail digestive tracts; spores of these same species have been soaked in extracts of mouse or rabbit dung; and they have also been incubated with chitinase-producing fungi or bacteria. None of these complex enzyme sources were successful in enhancing germination (Godfrey, 1957). Trappe & Maser (1976) investigated the germination of *Gl. macrocarpus* Tul. (= *Gl. macrocarpum*) spores recovered from the stomach contents of a vole (*Microtus oregoni*) and found that 9 out of 12 spores germinated in distilled water after 15 d incubation at room temperature.

This paper reports the *in vitro* effect of cellulase on the germination of asexual spores of the VAM fungus *Gigaspora rosea* Nicolson & Schenck. Spores of this fungus are globose in shape and are borne on extraradical hyphae in soil. They are white to cream with each having a distinct rose-pink area that can cover up to half the surface area of the spore. The spore wall is about 2·4–7·5 μm in thickness and consists of two to five, 1–2 μm thick, inseparable layers (Nicolson & Schenck, 1979).

22

METHODS AND MATERIALS

A culture of *G. rosea* (INVAM no. 105) was obtained from the International Culture Collection of Vesicular–Arbuscular Mycorrhizal Fungi, Plant Pathology Department, University of Florida. These spores were multiplied in pot cultures containing equal volumes of autoclaved sand, soil and vermiculite and planted with *Allium porrum* L. (leek) and *Axonopus compressus* (Swartz) Beauv. (carpet grass) seedlings.

Spores were extracted from the potting mix by wet sieving and decanting (Gerdemann & Nicolson, 1963) followed by centrifugation at room temperature for 4 min at 1000 *g* in tap water and for 30 s at 1000 *g* in a 40% (w/v) sucrose solution. The spores were collected on a 180 µm sieve and washed with a continuous stream of distilled water. Spores were surface-decontaminated using 5% (w/v) Chloramine T (Sigma) for 30–40 min (Tommerup & Kidby, 1976) prior to treatment with cellulase.

Cellulase (Sigma), prepared from *Trichoderma reesei* Simmons, was made up in sterile distilled water (pH 6·4) at concentrations of 1·6, 3·2, 4·8 and 6·4 units ml^{-1} and filter sterilized (0·22 µm pore size). 1·0 ml aliquots of each cellulase concentration, or sterile distilled water, were dispensed into the 3·4 ml wells of sterile multi-well dishes (Nunclon Multidishes, Nunc, Denmark) with each well containing a surface-decontaminated spore of *G. rosea*. The experiment was divided into five replicate blocks located at different positions within an incubator set at 28 °C. Each block contained five randomly arranged multi-well dishes representing the four cellulase treatments and the control. In each dish 20 wells were used giving a total of 100 spores for each of the cellulase treatments and for the control. The dishes were sealed with parafilm. The spores were examined daily for 30 d using a binocular microscope at × 100 magnification. A spore was considered to have begun germination when a hyphal protrusion, other than the residual hyphal attachment, emerged through the spore wall. The germination data were arcsine transformed, analysed by analysis of variance and the means separated by the Tukey test (Zar, 1984).

RESULTS AND DISCUSSION

The maximum percentage germination of *G. rosea* spores for the different cellulase treatments are shown in Table 1. Figure 1 shows the increase in percentage spore germination with time in the different cellulase concentrations. It was found that the 3·2 and 1·6 units ml^{-1} of cellulase significantly enhanced germination over the control ($P < 0·05$), while the higher concentrations did not. The maximum germination of 89% was achieved with the 3·2 units ml^{-1} cellulase treatment. This was significantly greater than that obtained with 1·6 units ml^{-1} cellulase (Table 1). Germination values in all treatments and the control obtained at day 12 remained constant up to day 30. Some of the ungerminated spores obtained from the control after day 30 germinated following transfer to 3·2 units ml^{-1} cellulase from *Trichoderma reesei* (data not shown as the results were confounded by contamination in some wells).

The promotory effect of cellulase at 3·2 units ml^{-1} from *Trichoderma reesei*, on the germination of *Gigaspora* spores has been found to be repeatable and is now routinely used for the *in vitro* germination of spores in our laboratory. Further experiments (data not shown) using cellulase preparations (Sigma) from *Aspergillus niger*, *Penicillium funiculosum* and *T. viride* have been successful in promoting the germination of *G. rosea* spores. Also all four cellulases enhanced the germination of spores of *G. decipiens* Hall & Abbott. The optimal effect on germination in both species was obtained at a cellulase activity of 3·2 units ml^{-1} irrespective of the source of cellulase.

The presence of cellulose in the wall of VAM fungal spores has not been established conclusively. Gerdemann (1955) found no cellulose in spore walls of an unnamed species belonging to the Gigasporaceae. Sward (1981) found no cellulose in the three outer walls of *G. margarita* and the fourth innermost wall gave inconclusive results. Mosse (1970), however, obtained positive results when the innermost wall of *Acaulospora laevis* Gerd. & Trappe was tested for cellulose.

No cellulose was found in crushed spore walls of *G. rosea* or *G. decipiens* which were separately tested for the presence of cellulose using the methods of O'Brien & McCully (1981) and Sward (1981). Although these are crude, qualitative tests, it is unlikely that cellulase works to degrade a cellulose component of the spore wall to facilitate the emergence of a germ-tube. Additionally, Lewis (1991) has reported that chitin and chitosan, and not cellulose, are the major components of

Table 1. Maximum percentage germination of spores of *Gigaspora rosea* treated with different concentrations of cellulase. (Values are the means of five replicates)

Concentration of cellulase (units ml^{-1})				
0·0	1·6	3·2	4·8	6·4
13[a]	48[b]	89[c]	27[a]	20[a]

Means followed by the same letter are not significantly different, $P > 0·05$.

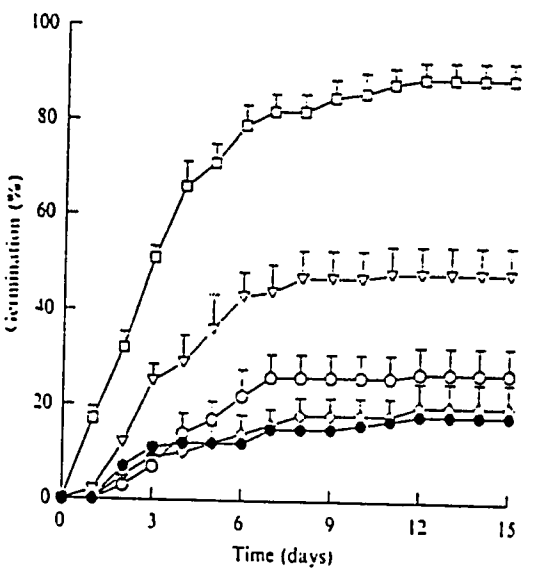

Fig. 1. Percentage germination of *Gigaspora rosea* spores using cellulase from *Trichoderma reesei*. ▽, 1·6 units ml^{-1}; □, 3·2 units ml^{-1}; ○, 4·8 units ml^{-1}; ◇, 6·4 units ml^{-1}; ●, control (distilled water). (Values are means of five replicates and error bars are standard errors of the means).

33

zygomycetous fungal walls. These preparations of cellulase are impure and the possibility that the effects on germination could be elicited by a common contaminating compound cannot be ruled out. It is, however, unlikely that the cellulase preparations are removing a germination inhibitor or providing a nutrient since concentrations above 3·2 units ml^{-1} had no significant effect on spore germination. The mode of action of these preparations and whether they can enhance germination *in vivo* need to be investigated.

This research was supported under Grant no. 534-0936-G-00-9118, Program in Science and Technology Cooperation, Office of the Science Advisor, U.S. Agency for International Development.

REFERENCES

Azcon, R. (1989). Selective interaction between free-living rhizosphere bacteria and vesicular–arbuscular mycorrhizal fungi. *Soil Biology and Biochemistry* 21, 639–641.

Caron, M. (1989). The potential use of mycorrhizae in the control of soil-borne diseases. *Canadian Journal of Plant Pathology* 11, 177–179.

Daniels, B. A. & Graham, S. O. (1976). Effects of nutrition and soil extracts on germination of *Glomus mosseae* spores. *Mycologia* 68, 108–116.

Daniels-Hetrick, B. A. (1984). Ecology of VA mycorrhizal fungi. In *VA Mycorrhizas* (ed. C. Ll. Powell & D. J. Bagyaraj), pp. 35–55. CRC Press: Boca Raton, Florida, U.S.A.

Gemma, J. & Koske, R. E. (1988). Pre-infection interactions between roots and the mycorrhizal fungus *Gigaspora gigantea*: chemotropism of germ-tubes and root growth response. *Transactions of the British Mycological Society* 91, 123–132.

Gerdemann, J. W. (1955). Relation of large soil-borne spore to phycomycetous mycorrhizal infections. *Mycologia* 47, 619–632.

Gerdemann, J. W. & Nicolson, T. H. (1963). Spores of mycorrhizal *Endogone* species extracted from soil by wet sieving and decanting. *Transactions of the British Mycological Society* 46, 235–244.

Gianinazzi-Pearson, V., Branzanti, B. & Gianinazzi, S. (1989). *In vitro* enhancement of spore germination and early hyphal growth of a vesicular-arbuscular mycorrhizal fungus by host root exudates and plant flavonoids. *Symbiosis* 7, 234–255.

Godfrey, R. M. (1957). Studies of British species of *Endogone*. III. Germination of spores. *Transactions of the British Mycological Society* 40, 203–210.

Hepper, C. & Smith, G. A. (1976). Observations on the germination of *Endogone* spores. *Transactions of the British Mycological Society* 66, 189–194.

(Accepted 17 February 1992)

Koide, R., Li, M., Lewis, J. & Irby, C. (1988). Role of mycorrhizal infection in the growth and reproduction of wild *vs* cultivated plants. I. Wild *vs* cultivated oats. *Oecologia* 77, 537–543.

Lewis, D. H. (1991). Fungi and sugars – a suite of interaction. *Mycological Research* 95, 897–904.

Michelsen, A. & Rosendahl, S. (1990). The effect of VA mycorrhizal fungi, phosphorus and drought stress on the growth of *Acacia nilotica* and *Leucaena leucocephala* seedlings. *Plant and Soil* 124, 7–13.

Morton, J. B. & Benny, G. L. (1990). Revised classification of arbuscular mycorrhizal fungi (Zygomycetes): a new order, Glomales, two new suborders, Glomineae and Gigasporineae and two new families, Acaulosporaceae and Gigasporaceae, with an emendation of Glomaceae. *Mycotaxon* 37, 471–491.

Mosse, B. (1959). The regular germination of resting spores and observations on the growth requirements of an *Endogone* sp. causing vesicular-arbuscular mycorrhiza. *Transactions of the British Mycological Society* 42, 273–286.

Mosse, B. (1962). The establishment of vesicular-arbuscular mycorrhiza under aseptic conditions. *Journal of General Microbiology* 27, 509–520.

Mosse, B. (1970). Honey-coloured sessile *Endogone* spores. III. Wall Structure. *Archiv für Mikrobiologie* 74, 146–159.

Nicolson, T. H. & Schenck, N. C. (1979). Endogonaceous mycorrhizal endophyte in Florida. *Mycologia* 71, 178–198.

O'Brien, T. P. & McCully, M. E. (1981). *The study of plant structure, principles and selected methods*. Termarcarphi Pty Ltd: Australia.

Safir, G. R., Coley, S. C., Siqueira, J. O. & Carlson, P. S. (1990). Improvement and synchronization of VA mycorrhiza fungal spore germination by short-term cold storage. *Soil Biology and Biochemistry* 22, 109–111.

Siqueira, J. O., Sylvia, D. M., Gibson, J. & Hubbell, D. H. (1985). Spores, germination and germ-tubes of vesicular–arbuscular mycorrhizal fungi. *Canadian Journal of Microbiology* 31, 965–971.

Smith, S. S. E. (1980). Mycorrhizas of autotrophic higher plants. *Biological Reviews* 55, 475–510.

Sward, R. J. (1981). The structure of the spores of *Gigaspora margarita*. I. The dormant spore. *New Phytologist* 87, 761–768.

Tommerup, I. C. (1983 *a*). Spore dormancy in vesicular-arbuscular mycorrhizal fungi. *Transactions of the British Mycological Society* 81, 37–45.

Tommerup, I. C. (1983 *b*). Temperature relations of spore germination and hyphal growth of vesicular–arbuscular mycorrhizal fungi in soil. *Transactions of the British Mycological Society* 81, 381–387.

Tommerup, I. C. & Kidby, D. K. (1976). Production of aseptic spores of vesicular-arbuscular endophytes and their viability after chemical and physical stress. *Applied and Environmental Microbiology* 39, 1111–1119.

Trappe, J. M. & Maser, C. (1976). Germination of *Glomus macrocarpus* (Endogonaceae) after passage through a rodent's digestive tract. *Mycologia* 68, 433–436.

Will, M. E. & Sylvia, D. M. (1990). Interaction of rhizosphere bacteria, fertilizer and vesicular–arbuscular mycorrhizal fungi with sea oats. *Applied and Environmental Microbiology* 56, 2073–2079.

Zar, J. H. (1984). *Biostatistical Analysis*. 2nd edn. Prentice-Hall: Englewood Cliffs, New Jersey, U.S.A.

DO PESTICIDE USE AND FARMING PRACTICES REDUCE THE AGRONOMIC BENEFITS OF VA MYCORRHIZAS IN BARBADOS?

Susan B. Persad-Chinnery, Richard B.G. Dales and Louis E. Chinnery

Department of Biology, University of the West Indies, Barbados.

ABSTRACT

Vesicular-arbuscular mycorrhizal (VAM) fungi are organisms that form mutually beneficial associations with most plants and as such have the potential to be utilised as a biofertiliser in agro-ecosystems. This review introduces the benefits of VAM fungi and examines the effects agro-chemicals and Barbadian farming practices may have on them. Very limited studies have been conducted on the effects of pesticides, fertiliser and cropping practices on indigenous species of VAM fungi in Barbadian soils. Research conducted elsewhere suggests that agro-chemicals and farming practices may have varying effects on VAM fungi that are influenced by host plants, soil conditions and the species of VAM fungi. Research needs to be conducted locally such that indigenous species of VAM fungi are identified, their usefulness with particular crops evaluated and the effects of pesticides and farming practices on VAM fungal infection and propagule numbers determined.

INTRODUCTION

One trend in worldwide agriculture is the attempt to shift from intensive agro-ecosystems which require high inputs to a more sustainable type of agriculture where emphasis is placed on environmental preservation. The latter includes understanding the beneficial organisms within these systems and maximising their usefulness. Vesicular-arbuscular mycorrhizal (VAM) fungi are one group of beneficial organisms that colonise the roots of most plants to form VA mycorrhizas. The relationship between the plant and the fungus is such that the host receives mineral nutrients via the fungus and the fungus obtains photosynthetically derived carbon compounds from the host. VA mycorrhizas are the most commonly occurring and most widespread type of mycorrhiza.

Fungi forming VA mycorrhizas are classified into six genera within three families of the order Glomales, class Zygomycetes: *Entrophospora* and *Acaulospora* of the family Acaulosporaceae, *Scutellospora* and *Gigaspora* of the family Gigasporaceae and *Glomus* and *Sclerocystis* of the family Glomaceae. VA mycorrhizas may be absent in members of the angiosperm families Brassicaceae, Chenopodiaceae and Cyperaceae and from soils that have been mined, eroded or fumigated (Hirrel, 1978; Abbott and Robson, 1991). VAM fungi are found mainly in top soil and their abundance is drastically reduced below 30-50 cm from the soil surface (An *et al.*, 1990). However, Schwab and Reeves (1981) found that in more arid soils, VAM fungal propagules such as

spores and extraradical hyphae can be found at depths below 50 cm.

VA mycorrhizal plants have enhanced nutrient uptake, especially of phosphorus (Harley and Smith, 1983), and fewer incidences of micro-nutrient deficiencies (Abbott and Robson, 1984). Such plants show increases in growth (Smith, 1980; Gianinazzi-Pearson *et al.*, 1989; Nielsen, 1990), plant disease resistance (Morandi *et al.*, 1984; Feldmann *et al.*, 1989; Caron, 1989), drought tolerance (Mosse and Hayman, 1971; Davis *et al.*, 1992), and reproduction (Koide *et al.*, 1988). VAM fungi also partition nutrients between large plants and seedlings such that intra- and inter-species competition is reduced (Eissenstat & Newman, 1990).

The growth promoting effect of VAM fungal infection can be attributed to enhanced phosphorus availability to the host plant, especially when these plants are grown in phosphorus-limited soils. Baas and Kuiper (1989) found that the physiological effects on plants as a result of VAM fungal infection are similar to those of phosphorus additions to soils low in this mineral. Conversely, soils with high phosphorus levels do not promote VA mycorrhizal formation (Menge, 1978; de Miranda *et al.*, 1989). Soil phosphorus is present in three forms: (1) soluble inorganic phosphate in the soil solution, (2) insoluble mineral phosphate held in crystal lattices and (3) insoluble organic phosphorus compounds such as phytate (Tinker, 1975). Soluble phosphate is the form that is readily utilized by plants and its concentration in soil solution is very low (less than 5 $\mu g\ g^{-1}$ soil). Phosphates when added to soil can become adsorbed or form complexes with soil minerals, precipitate out of the soil solution or be utilized by soil microbes for growth. Apart from becoming unavailable to the plant, phosphorus diffuses slowly in soil (Buckman & Brady, 1960). Usually, depletion zones develop around roots especially in soils with low concentrations of this macronutrient. VAM fungi extend the surface area of the roots and as such, the mycorrhizal root system can explore a greater volume of soil beyond the depletion zone for phosphorus. The smaller diameter of the hyphae allows the fungus to explore smaller pore spaces than roots. There have been studies suggesting that VAM fungi can alter unusable forms of phosphorus (i.e. adsorbed and organic phosphates) and make them available to the plant (Brundrett, 1991).

In natural ecosystems VAM fungal populations in soil fluctuate due to plant growth stage, seasonal stress (e.g. wet or dry season) and soil factors (e.g. pH, salinity). Such fluctuations are measured either by quantifying the number and species of asexual spores or by determining the intensity of VAM fungal infection within roots during a growing season. The use of pesticides, some cropping practices (e.g. tillage, mono-culture) and fertilisation also promote such changes and may decrease the diversity of VAM fungi and reduce the beneficial effects that these fungi have on plant growth (Sieverding, 1989; Rabatin, 1989). This paper reviews the use of pesticides, fertilisers and farming practices in Barbados and examines the effects that these agro-chemicals and practices may have on native VAM fungal populations and mycorrhizal associations.

EFFECTS OF AGRO-CHEMICAL USE ON VAM FUNGI

There have been few studies on the effects of pesticides and fertilisers on VAM fungi and the formation of VA mycorrhizas. Results from greenhouse pot culture experiments and, to a lesser extent, field experiments suggest that agricultural chemicals, used at recommended doses could have varying degrees of effect upon VAM fungi ranging from minor to severe (Trappe *et al.*, 1984). Many pesticides exert effects on organisms for which the chemical was not specifically formulated. For example, an

insecticide may kill non-target insects, including biological control agents, or may have deleterious effects on beneficial fungi and bacteria. The interactions between pesticides and non-target organisms, particularly beneficial ones, should always be considered before application.

Fungicides

Fungicides, either systemic or contact, are used in agro-ecosystems when fungal diseases threaten crop yields. Systemic fungicides are taken up by roots and leaves and are translocated throughout the plant thus rendering the entire plant resistant to infection. Contact fungicides are effective against pathogens only at the sites of application which are usually seeds, foliage and tubers. VAM fungi, as non-target organisms, may be affected by fungicides which may inhibit spore germination, mycelial development or sporulation. There are no reports of fungicides that totally eliminate VAM fungi and a few reports suggest that VAM fungal growth may even increase after the application of certain fungicides.

Tables 1 and 2 list the fungicides approved for use in Barbados and no studies have been conducted to determine the effects of these fungicides on VAM fungi and VA mycorrhizas in Barbadian soil. Elsewhere, Rabatin (1989) found that triazole fungicides suppress VAM fungal root infection and sporulation, and dicarboximides and dithiocarbamates did not inhibit VAM formation when used at recommended rates. The effects of eleven fungicides were tested on two species of *Glomus* by Nemec (1980). Captafol at rates of 2.2, 4.5 and 9.0 kg ha^{-1} and captan at rates exceeding 9.0 kg ha^{-1} reduced infection and sporulation. Metalaxyl at rates as for captafol did not adversely affect the growth of mycorrhizal plants and had a slight growth reducing effect on *G. etunicatum*. All rates of benomyl whether applied to seeds or mixed into soil were toxic to VAM fungi (Nemec, 1980) as are most systemic fungicides (Jalali and Domsch, 1975). Maneb and chlorothalonil had no effect on *G. mosseae* at rates of 5.6 kg ha^{-1} but at rates of 11.2 and 22.4 kg ha^{-1} sporulation was reduced. Copper based fungicides which are generally used to control phycomycetes and downy mildews have also been reported to have a growth reducing effect on VAM fungi (Graham, 1986; Nemec, 1980; Menge, 1982). All of these types of fungicides mentioned have been approved for use in Barbadian agro-ecosystems.

Hetrick and Wilson (1991) reported that metalaxyl at concentrations of 100 and 200 $\mu l\ l^{-1}$ increased root colonization by *G. etunicatum*. It was postulated that if the mycorrhizal fungi were parasitized by Oomycetes, which metalaxyl targets, then their elimination with metalaxyl would lead to an increase in VAM fungal colonization of plant roots. Thus, VAM fungi may have a more competitive ability in soil when its pathogens are controlled by certain fungicides. Further research is needed to determine the most effective fungicides for parasitic fungi that are the least harmful to VAM fungi.

Herbicides

Herbicides are used to control the presence of undesirable plants and may have indirect harmful effects on VAM fungi. When a plant is killed its mycorrhizal association breaks down and the extraradical mycelium has to infect another plant. If there are few or no plants remaining after the herbicide treatment then the survival of these fungi may be threatened. Alternatively the herbicide may lead to a shift in the dominant vegetation such that the dominant plant species is non-mycorrhizal or weakly mycorrhizal and this too may threaten the survival of VAM fungi.

Bellamy (pers. comm.) found that sugarcane growth in Barbados was reduced when 2,4-D or

Table 1: Approved systemic fungicides for use in Barbados
(Data supplied by the Ministry of Agriculture).

TRADE NAME	COMMON NAME	CHEMICAL FAMILY	CONTROLS*
Afugan	Pyrazophos	Organophosphorus Pyrazolopyrimidine	Powdery mildews
Aliette	Fosetetyl	Organophosphorus Organoaluminium	Phycomycetes
Baycor	Bitertanol	Triazole	Rust, powdery mildews
Bayleton	Triadimefon	Triazole	Powdery mildews
Benlate	Benomyl	Benzimidazole	Wide range of fungal diseases
Calirus	Benodanil	Anilide	Rust diseases
Copper fungicide Perenox	Copper Oxychloride Copper Hydroxide Cuprous Oxide		Downy mildews, *Phytophthora*, *Pythium* diseases
Fuberidazole	Fuberidazole	Benzimidazole	Seed treatment
Haitin	Fentin Hydroxide	Organotin	Wide range of fungal diseases
Mertect	Thiabendazole	Triazole, Benzimidazole	Wide range of fungal diseases
Polyoxin	Polyoxin	Antibiotic	Wide range of fungal diseases
Ridomil M2	Metalaxyl	Acylalanine	Peronosporales
Vapam	Metham-sodium	Dithiocarbamate	Soil fumigant/sterilant

* - powdery mildews (Ascomycetes, Erysiphales), rust (Basidiomycetes, Uredinales), downy mildew (Oomycetes, Peronosporales).

Table 2: Contact fungicides approved for use in Barbados
(Data provided by the Ministry of Agriculture)

TRADE NAME	COMMON NAME	CHEMICAL FAMILY	USES & TARGET
Antracol	Propineb	Carbamate Organozinc	Downy mildew, rusts, sigatoka in banana
Aretan	2-Methoxyethyl-mercuric chloride	Organomercury	Seed coating
Botrilex, Terraclor	Quintozene	Organochlorine	Seed and soil fungicide, damping-off disease
Bravo, Daconil	Chlorothalonil	Phthalimide	Wide range of fungal diseases
Captan, Orthocide, Merpan	Captan	Phthalimide	Wide range of fungal diseases
Curzate	Cymoxanil	Urea, Acetamide	Peronosporales
Dithane, Zineb	Zineb	Organozinc, Dithiocarbamate	Downy mildew
Dithane	Mancozeb	Organozinc, Dithiocarbamate	Wide range of fungal diseases
Dyrene	Anilazine	Triazine, Organochlorine	Wide range of fungal diseases
Maneb, Manzate	Maneb	Organomanganese, Dithiocarbamate	Wide range of fungal diseases
Ortho Difolatan	Captafol	Phthalimide	Wide range of fungal diseases
Rovral	Iprodione	Dicarboximide	Wide range of fungal diseases
Terra-coat Terrazole	Etridiazole	Thiadiazole	*Phytophthora*, *Pythium*
Tinestan	Fentin acetate	Organotin	Wide range of fungal diseases
Toprose Mildew Spray	Dinocap	Nitrocompound	Powdery mildews

Table 3. Herbicides approved for use in Barbados (Ministry of Agriculture, 1983).

TRADE NAME	COMMON NAME	CHEMICAL FAMILY	USES*
Actril	Ioxynil	Nitrile	B, O
Afalon	Linuron	Urea	B, S
Ametrex, Gesapak	Ametryn	Triazine	B, S
Amex	Butralin	Dinitroaniline	B, S
Amiben	Chloramben	Benzoic	B, S
Amine 2, 4 D, U 46 D, Weedar	2,4 D	Phenoxyl	C, S
Ansar, Daconate	MSMA	Organoarsenic	B, O
Atranex, Atrazine, Gesaprim	Atrazine	Triazine	B, S
Banvel	Dicamba	Benzoic	C, S
Basagran	Bentazone	Benzothiadiazole	B, O
Butoxone	2,4-DB	Phenoxy	C, S
Cotoran	Fluometuron	Trifluoromethyl, Urea	B, S
Dacthal	Chlorthal-dimethyl	Phthalic acid	B, O
Dalapon, Gramevin, Dowpon	Dalapon-sodium	Organochlorine	C, S
DEF	S,S,S-tributyl phosphorotrithioate	Organophosphorus	D, T
Diurex, Diuron, Karmex	Diuron	Urea	A, S'
Dymid, Enide	Diphenamid	Acetamide	B, S
Gesagard	Prometryn	Triazine	B, S
Gramoxone	Paraquat dichloride	Bipyridylium	C, P
Hyvar X	Bromacil	Uracil	A, S'
Igran	Terbutryn	Triazine	B, S
Lasso	Alachlor	Acetamide	B, S
NaTa TCA	TCA	Aliphatic	C, S
Patoran	Metobromuron	Urea	B, S
Perflan	Tebuthiuron	Urea, Thiadiazole	A, S'
Phytar	Dimethylarsinic acid	Organoarsenic	A, S'
Planavin	Nitralin	Nitrocompound	B, S
Pyramin	Chloridazon	Pyridazine	B, S
Reglone	Diquat dibromide	Bipyridylium	B, P
Ronstar	Oxadiazon	Oxadiazole	B, O
Roundup	Glyphosate	Organophosphorus	C, S'
Surflan	Oryzalin	Nitrocompound	B, S
Tordon	Picloram	Pyridine	C, S
Treflan	Trifluralin	Trifluoromethyl, Dinitroaniline	B, O
Velpar	Hexazinone	Triazine	C, P
Weedazol	Amitrole	Triazole	A, S'

* O = selective contact herbicide with some systemic activity, P = non-selective contact herbicide, S = selective systemic, S' = non-selective systemic, A = all weeds on uncropped land, B = annual grasses and broad-leaved weeds, C = controls annual, biennial and perennial weeds, D = used to defoliate cotton prior to harvesting, T = plant growth regulator.

Dowpon were used to control weeds compared to manual weeding. This effect could have resulted from negative effects on VAM formation or other beneficial organisims (e.g. nitrogen-fixing bacteria). Chinnery *et al.* (1987) previously showed that sugarcane is highly mycorrhizal. Elsewhere, Dehne *et al.* (1990) reported that 2,4-D at recommended rate did not have any harmful effects on VAM fungi. The herbicide paraquat was found to reduce VAM fungal infection in roots and sporulation but generally herbicides do not have fatal effects on VAM fungi (Rabatin *et al.*, 1989). Dehne *et al.* (1990) tested the effects of herbicides on hyphal growth and VAM fungal infection. Alachlor used at recommended rates depressed hyphal growth and diquat also at recommended rates did not have any adverse effects on VAM fungi. This study was conducted on *G. fasciculatum*, *G. etunicatum* and *G. mosseae*. It should not be inferred that other genera would react similarly when exposed to herbicides. Information on the sensitivities of indigenous species to herbicides need to be collected. Table 3 lists the commonly used herbicides in Barbados. There are no known reports on the effects of most of these herbicides on VAM fungi in Barbadian or any other soils.

Insecticides

There is little information available on the effects of insecticides on VAM fungi. Insecticides may have no effect or either cause promotory or inhibitory effects on growth and sporulation of VAM fungi. Trappe *et al.* (1984) reported that carbofuran at 22 kg ha^{-1} and oxamyl as a foliar spray did not have any effect on sporulation of VAM fungi. A promotory effect may be realized if the insecticide eliminates predators of these fungi. Soil organisms like collembola and nematodes graze VAM fungal hyphae and spores. Thus if these organisms are killed increased fungal growth and sporulation may result. Alternatively, insecticides that kill soil organisms responsible for dispersing spores may contribute to changes in species diversity in a field. Generally most insecticides are applied to foliar parts of the plant and when used at recommended rates should not affect VAM fungi. However, they may be used at concentrations above the recommended rate or at a frequency greater than that recommended (Ferdinand, 1988; Chinnery and Gibbs, 1990). Buildup of insecticide residues in the soil could lead to deleterious effects on VAM fungi. Tables 4 and 5 list insecticides that have been approved for use in Barbados. These insecticides have have not been tested to evaluate their effects on VAM fungi and VA mycorrhizas in Barbadian soils.

Fertilisers

Intensive fertilisation may decrease the quantity of VA mycorrhizal fungi in some tropical soils and it has been consistently shown that increased levels of phosphorus in soils tends to demote the formation of mycorrhizas (Sieverding, 1989). Phosphorus fertilisers applied to fields at concentrations greater than 50 kg P ha^{-1} reduce the formation of VA mycorrhizas (Sieverding, 1991). Abbott and Robson (1984) reported that high phosphorus and nitrogen levels decreased VAM infection within roots. Addition of fertilisers, especially phosphates, to soil creates situations where the crop plants depend less on VAM fungi for growth and, at very high phosphorus levels, root systems are normally sparsely infected. Ellis *et al.* (1992) found that root colonization of soybean and sorghum by VAM fungi was greatest when fertiliser was not applied to the soil. Figure 1 shows the amounts of phosphorus fertiliser imported into Barbados over a ten year period. Assuming that 90 % of the imported phosphorus fertiliser was applied to 10445 ha of non-sugar agro-ecosystems (1989 statistic) then approximately 40 kg phosphate fertilizer was used per hectare. This value is approaching the levels that will impact negatively on VAM fungi.

Table 4: Organophosphorus insecticides approved for agricultural use in Barbados.
(Data provided by the Ministry of Agriculture)

TRADE NAME	COMMON NAME	CONTROLS*
Acetellic	Pirimiphos-methyl	Wide range of insects and mites (C)
Anthio	Formothion	Sucking and mining insects and mites (C)
Azodrin	Monocrotophos	Wide range of insects and mites (C)
Basudin, Diazol, Disonex	Diazinon	Chewing and sucking insects and mites (B)
Baytex, Lebaycid	Fenthion	Fruit-flies, leafhoppers, leafminers, stem borer, leaf-eating larvae (A)
Bercotox	Dioxathion	Many insects and mites (C)
Bidrin	Dicrotophos	Sucking, chewing, boring insects and mites(C)
Birlane, Supona	Chlorfenvinfos	Soil insects and mites (C)
Bromophos	Bromophos	Diptera, Hemiptera, Lepidoptera, Coleoptera (A')
Cidial, Perfekthion	Phenthoate	Wide range of insects (B)
Cygon, Rogor, Systoate	Dimethoate	Wide range of insects (C)
Dibrom	Naled	Wide range of insects and mites (A)
Dipterex, Danex	Trichlorfon	Diptera, Lepidoptera, Hymenoptera, Hemiptera, Coleoptera (A')
Ekalux	Quinalphos	Many insect pests (C)
Fenitrothion, Fentro, Folithion, Sumithion	Fenitrothion	Chewing, sucking and boring insects (A')
Gardona	Tetrachlorvinphos	Lepidoptera, Diptera (B)
Hostathion	Triazophos	Wide range of insects, mites and nematodes (A'')
Kilval	Vamidothion	Wide range of insects (C)
Malathion, Malkill, Meladrex	Malathion	Sucking and chewing insects and mites (B)
Mocap	Ethoprophos	Plant parasitic nematodes and soil insects (A''')
Oftanol	Isofenphos	Cabbage root flies, carrot flies, onion flies (C')
Orthene, Ortho	Acephate	Chewing and sucking insects (C')
Phosdrin	Mevinphos	Chewing and sucking insects and mites (C)
Surecide	Cyanofenphos	Sucking and chewing insects (C''')
Tokuthion	Prothiofos	Leaf-eating caterpillars and thrips (A')
Trichlorphon	Trichlorfon	Wide range of insect pests (A')

A = non-systemic insecticide with contact, stomach and respiratory action, A' = non-systemic insecticide with contact and stomach action, A'' = non-systemic insecticide, acaricide, nematicide with contact and stomach action, A''' = non-systemic nematicide and soil insecticide with contact action, B = non-systemic insecticide and acaricide with contact, stomach and respiratory action, C = systemic insecticide and acaricide with contact and stomach action, C' = systemic insecticide with contact and stomach action, C'' = systemic insecticide, acaricide, nematicide with contact and stomach action.

Table 5: Other insecticides approved for agricultural use in Barbados (Data provided by the Ministry of Agriculture).

TRADE NAME	COMMON NAME	CHEMICAL FAMILY	CONTROLS
Aldrine	Aldrin	Organochlorine	Soil dwelling insects (A)
Allethrine	Allethrin	Pyrethroid	Flies mosquito and ants (A)
Ambush	Permethrin	Pyrethroid	Lepidoptera and Coloptera (A)
Baygon, Finis	Propoxur	Carbamate	Sucking and chewing insects (A)
Belmark	Fenvalerate	Pyrethroid	Wide range of insects (A')
Chlordane	Chlordane	Organochlorine	Wide range of insects (A)
Decis	Deltamethrin	Pyrethroid	Many species of insects (A')
Dieldrine	Dieldrin	Organochlorine	Mainly termites and locusts (A')
Dipel	Bacillus thuringiensis	Biological	Lepidopterous larvae (D)
Endrin	Endrin	Organochlorine	Wide range of insects (A')
Ficam	Bendiocarb	Carbamate	Soil and seed treatment and foliar insects (C')
Folimat	Omethoate		
Fundal	Chlordimeform	Formamidine	Insects and mites (B)
Furadan	Carbofuran	Carbamate	Soil dwelling and foliar eating insects (C'')
Gamma BHC, Gammatox	Lindane	Organochlorine	Phytophagous and soil dwelling insects (A)
Heptachlore	Heptachlor	Organochlorine	Termites, ants and soil insects (A)
Kelthane	Dicofol	Organochlorine	Many species of mites (E)
Lannate	Methomyl	Carbamate	Wide range of insects (C)
Osbac	Fenobucarb	Carbamate	Sucking insects (D)
Padan	Cartaphydrochloride	Thiocarbamate	Chewing and sucking insects (C')
Peropal	Azocyclotin	Triazole, Organotin	Spider mites (E)
Phostoxin	Phosphine	Inorganic	Insects and rodent pests (J)
Pybuthrin	Piperonyl butoxide	Benzodioxole	Synergist for pyrethrins and related insecticides.
Pyrethrin	Pyrethrins	Pyrethroid	Wide range of insects and mites (A')
Ripcord	Cypermethrin	Pyrethroid	Wide range of insects (A')
Sevin	Carbaryl	Carbamate	Chewing and sucking insects (K)
Thiodan, Thionex, Tiovel	Endosulfan	Organochlorine	Sucking, chewing and boring insects (B)
Vydate	Oxamyl	Carbamate	Chewing and sucking insects (C'')

A = non-systemic insecticides with contact, stomach and respiratory action, A' = non-systemic insecticide with contact and stomach action, B = non-systemic insecticide and acaricide with contact and stomach action, C = systemic insecticide and acaricide with contact and stomach action, C' = systemic insecticide with contact and stomach action, C'' = systemic insecticide, acaricide, nematicide with contact and stomach action, D = insecticide with stomach action, E = non-systemic acaricide with contact action, J = insecticide and rodenticide, respiratory, metabolic and nerve poison, K = insecticide with slight systemic properties, acts as a plant growth regulator.

Figure 1. The amount and value of fertilisers containing phosphorus for the years 1982 to 1991 as recorded by the Barbados Customs Department.

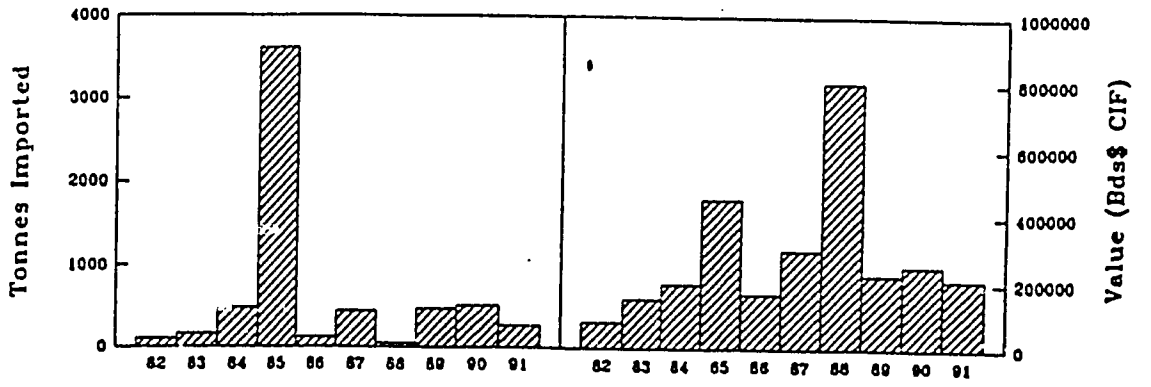

Plant Growth Regulators

Michelini et al. (1989) tested the effect of the triazole paclobutrazol on the mycorrhizas of *Citrus macrophylla* in Barbados. These trees were colonised with an indigenous species of Glomus. They reported that paclobutrazol applied at 1.0 g active ingredient per 11 dm^{-3} soil significantly increased the intensity of VAM fungal infection within roots when compared to control plants. Paclobutrazol, which also has fungicidal properties, did not appear to have any deleterious effects on VAM fungi. This study also suggests that VAM fungi reduced the effects of root stunting caused by paclobutrazol. The plant growth regulator DEF (Table 3) is approved for use in Barbados and no studies have yet been conducted to test its effects on indigenous VAM fungal populations.

EFFECTS OF AGRICULTURAL PRACTICES ON VAM FUNGI

Changes in the distribution and species diversity of VAM fungi in the soil can occur either suddenly (e.g. flooding) or gradually (e.g. through agricultural practices). These fungi are also affected by the soil and the host plant when grown in an agricultural field. The effects of agricultural practices on VAM fungi and VA mycorrhizas have not been studied widely in Barbados.

Crop rotation

Unbalanced crop rotation where a VAM fungal host is alternated with a non-host species is very likely to lead to a reduction in the number and species diversity of VAM fungi in the soil. Alternating crops that are mycorrhizal is suggested if the population of VAM fungi is to exert a significantly beneficial effect on agricultural production. Harinikumar and Bagyaraj (1989) reported stimulated mycorrhizal root colonization and sporulation when crop rotation was carried out.

Continuous monoculture has been shown to have a decreasing effect on the abundance of VAM propagules in the soil while intercropping supports a diversity of VAM fungal types (Sieverding, 1991). However, in Barbados continuous monoculture of sugarcane does not seem to have caused a reduction in the formation of VA mycorrhizas (Chinnery *et al.*, 1987). This contradictory finding indicates that further studies need to be conducted since different species of VAM fungi may react differently when associated with particular crops. A fallow period is normally necessary for fields that have been extensively

monocultured as a means of replenishing the diversity of VAM fungal populations. Fallow, or lay aside, is not normally practiced in Barbadian agriculture.

Organic manure

The incorporation of fresh organic manure into top soil can have a reducing effect on the formations of mycorrhizas. Brechelt (1989) found that an increase in amounts of fresh manure led to a decrease in mycorrhizal efficiency due to the increased phosphorus levels in the soil. Composted manure has been shown to improve the effectiveness of VAM fungi (Sieverding, 1991). In Barbados, de Boer (1992) reported that compost consisting of filter-press mud, bagasse and fly-ash leads to an increase in sugarcane yields when compared to N-K fertiliser application. It is possible that an effect of the compost is the promotion of VA mycorrhizal associations which led to better yields.

Plant residues returned to the soil have been reported to have promotory effects on VAM fungal propagules in the soil. However, such a practice can retain disease and pest organisms in the field and should be exercised with caution.

Tillage

Recently there has been emphasis on cropping with reduced tillage. This has been advocated mainly because tillage promotes soil erosion, reduces soil moisture and promotes the prolific growth of saprophytic bacteria rather than fungi. Dibb *et al.* (1990) reported that tillage alters the distribution of VAM fungi in the soil profile and can lead to reduced VA mycorrhiza efficiency and lower spore densities. Due to the predominance of clay in Barbadian soils there is a tendency for the soil to compact and self-decompact. Compaction too, can alter the occurrence of VAM fungi in the field hence, a balance of tillage and compaction must be sought to minimize their negative effects on VAM fungi.

Acidification

Abbott and Robson (1991) reported that acidification can reduce the distribution of VAM fungi. Although the soils of Barbados are alkaline it is not standard practice to acidify soil prior to planting. Should acidification become necessary for the growth of certain crops in the future then, research would need to be conducted to evaluate the effects of acidification on indigenous VAM fungal populations.

CONCLUSION

The effects of agro-chemicals on VAM fungi are variable. The effects whether promotory or harmful to these fungi appear to vary for the particular agro-ecosystem and the species of VAM fungi present. Some studies, done elsewhere, on the effects of pesticides on VAM fungi and VA mycorrhizas have used greenhouse pot cultures and research needs to be shifted from greenhouse experiments to the field. Results obtained from greenhouse experiments usually do not equate to the field situation. Since most of the agro-chemicals approved for use in Barbados have not been tested to determine their effects on indigenous VAM fungi and other beneficial organisms it may be advisable for such tests to be conducted before an agro-chemical is approved for use.

Very little information exists on the effects of agricultural practices on VAM fungi. If sustainable agriculture is to be achieved then the indigenous VAM fungal populations and their effectiveness and competitive ability must be evaluated. With this information the most effective VAM fungi for a particular crop can be determined and seedlings can be infected in the nursery before introduction into the field or it may be possible to inoculate entire fields with

suitable species of VAM fungi.

VAM fungi if managed as a biofertiliser can lead to a reduction in fertiliser inputs to agro-ecosystems and yet maintain high crop yields. Disease resistance, drought tolerance and the other benefits listed above should also stimulate interest in managing and effectively utilizing VAM fungi in Barbadian agro-ecosystems. Savings on production costs and thus the potential for increased profits are reasons why farmers may well be interested in maintaining the benefits of these fungi.

ACKNOWLEDGEMENTS

This research was supported under Grant No. 534-0936-G-00-9118, Program in Science and Technology Cooperation, Office of the Science Advisor, U.S. Agency for International Development.

REFERENCES

Abbott, L.K. and Robson, A.D. 1991. Factors affecting the occurrence of vesicular-arbuscular mycorrhizas. Agriculture, Ecosystems and Environment 35:121-150.

Abbott, L.K. and Robson, A.D. 1984. The effect of mycorrhizae on plant growth. Pp. 113-130 in: C. Ll. Powell and D.J. Bagyaraj, VA Mycorrhizae. CRC Press, Boca Raton, Florida.

An, Z.-Q., Grove, J.H., Hendrix, D.E., Hershman, D.E. and Henson, G.T. 1990. Vertical distribution of Endogonaceous mycorrhizal fungi associated with soybean as affected by soil fumigation. Soil Biology and Biochemistry 22:715-719.

Baas, R. and Kuiper, D. 1989. Effects of vesicular-arbuscular mycorrhizal infection and phosphate on *Plantago major* ssp. *pleiosperma* in relation to internal cytokinin concentrations. Physiologia Planatarum 76:211-215.

Brechelt, A. 1989. Effects of different organic manures on the efficiency of VA mycorrhiza. Agriculture, Ecosystem and Environment 29:55-58.

Brundrett, M. 1991. Mycorrhizas in natural ecosystems. Advances in Ecological Research 21:172-313.

Buckman, H.O. and Brady, N.C. 1960. The Nature and Properties of Soils. Macmillan Co., New York.

Caron, M. 1989. Potential use of mycorrhizae in control of soil-borne diseases. Canadian Journal of Plant Pathology 11:177-179.

Chinnery, L.E. and Gibbs, I.H. 1990. The use and abuse of insecticides on cabbage in Barbados. Paper presented at the 26th Meeting of the Carribbean Food Crops Society, Mayaguez, Puerto Rico.

Chinnery, L.E., Thomas, J.P., Harewood, M.S., Boyce, S.L., Prescod, S.D., Taitt, R.A., Burke, R.I.E., Augustus, G.S., and Archer, J.O. 1987. Mycorrhizae and sugarcane. Proceedings of the 5th Annual Conference of the Barbados Sugar Technologists Association, 5pp.

Davis, F.T. Jr., Potter, J.R. and Lindermann, R.G. 1992. Mycorrhiza and repeat drought exposure affect drought resistance and extraradical hyphae development of pepper plants independent of plant size and nutrient content. Journal of Plant Physiology 139:289-294.

de Boer, H. 1992. Sugar Cane Growers Manual. Barbados Sugar Industry Ltd, Barbados.

Dehn, B., Bodmer, M. and Schuepp, H. 1990. Influence of herbicides on VA mycorrhizal propagation in soil. Symbiosis 9:223-227.

De Miranda, J.C.C., Harris, P.J. and Wild, A. 1989. Effect of soil and plant phosphorus concentrations on vesicular-arbuscular mycorrhiza in sorghum plants. New Phytologist. 112:405-410.

Dibb, D.W., Fixen, P.E. and Murphy, L.S. 1990. Balanced fertilization with particular reference to phosphates: interaction of phosphorus with other inputs and management practices. Ferlilizer Research 27:29-52.

Eissenstat, D.M. and Newman, E.I. 1990. Seedling establishment near large plants: effects of vesicular-arbuscular mycorrhizas on the intensity of plant competition. Functional Ecology 4:95-99.

Ellis, J.R., Roder, W. and Mason, S.C. 1992. Grain sorghum-soybean rotation and fertilization influence on vesicular-arbuscular mycorrhizal fungi. Soil Science Society of America Journal 56:789-794.

Feldmann, F., Junqueira, N.T.V. and Lieberei, R. 1989. Utilization of VA-mycorrhiza as a factor in integrated plant protection. Agriculture, Ecosystem and Environment 29:131-135.

Ferdinand, E. M-R. 1988. The use of Pesticides by Vegetable Farmers in Barbados. Unpublished Report, CERMES, UWI, Barbados.

Gianinazzi-Pearson, V., Branzanti, B. and Gianinazzi, S. 1989. *In vitro* enhancement of spore germination and early hyphal growth of a vesicular-arbuscular mycorrhizal fungus by host root exudates and plant flavonoids. Symbiosis 7:243-255.

Graham, J.H., Timmer, L.W. and Fardelmann, D. 1986. Toxicity of fungicidal copper in soil to citrus seedlings and vesicualr-arbuscular mycorrhizal fungi. Phytopathology 76:66-70.

Harinikumar, K.M. and Bagyaraj, D.J. 1989. Effect of cropping sequence, fertilizers and farmyard manure on vesicular-arbuscular mycorrhizal fungi in different crops over three consecutive seasons. Biology and Fertility of Soils 7:173-175.

Harley, J.L. and Smith, S.E. 1983. Mycorrhizal Symbiosis. Academic Press, London.

Hetrick, B.A.D. and Wilson, G.W.T. 1991. Effects of mycorrhizal fungus species and metalaxyl application on microbial suppression of mycorrhizal symbiosis. Mycologia 83:97-102.

Hirral, M.C., Mehravaran, H. and Gerdemann, J.W. 1978. Vesicular-arbuscular mycorrhizae in Chenopodiaceae and Cruciferae: do they occur? Canadian Journal of Botany 56:2813.

Jalali, B.L. and Domsch, K.H. 1975. Effect of systemic fungi-toxicants on the development of endotrophic mycorrhiza. Pp. 619-626 *in*: Endomycorrhizas. F.E. Sanders, B Mosse and P.B. Tinker, Academic Press, London.

Koide, R., Li, M., Lewis, J. and Irby, C. 1988. Role of mycorrhizal infection in the growth and reproduction of wild vs. cultivated plants. I. Wild vs. cultivated oats. Oecologia 77:537-543.

Menge, J.A. 1978. Partial substitution of mycorrhizal fungi for phosphorus fertilization in the greenhouse culture of citrus. Soil Science Society of America Proceedings 42:926-930.

Menge, J.A. 1982. Effect of soil fumigants and fungicides on vesicular-arbuscular mycorrhizal fungi. Phytopathology 72:1125-1132.

Michelini, S., Chinnery, L.E. and Thomas, J.P. 1989. The effect of paclobutrazol on the vesicular-arbuscular mycorrhizae of alemow, *Citrus macrophylla* Webster rootstocks. Acta Horticulturae 239:427-430.

Michelsen, A. and Rosendahl, S. 1990. The effect of VA mycorrhizal fungi, phosphorus and drought stress on the growth of *Acacia nilotica* and *Leucaena leucocephala* seedlings. Plant & Soil 124:7-13.

Morandi, D., Bailey, J.A. and Gianinazzi-Pearson, V. 1984. Isoflavonoid accumulation in soybean roots infected with vesicular-arbuscular mycorrhizal fungi. Physiological Plant Pathology 24:357-364.

Mosse, B. and Hayman, O.J. 1971. Plant growth responses to vesicular-arbuscular mycorrhiza. II. *In* unsterilised field soils. New Phytologist 70:29-34.

Neilsen, J.D. 1990. The effect of VAM on growth and uptake of nutrients for lucerne. Agriculture, Ecosystem and Environment 29:99-104.

Nemec, S. 1980. Effects of 11 fungicides on endomycorrhizal development in sour orange. Canadian Journal of Botany 58:522-526.

Rabatin, S.C. and Stinner, B.R. 1989. The significance of vesicular-arbuscular mycorrhizal fungi-soil macroinvertebrate interactions in agroecosystems. Agriculture, Ecosystem and Environment 27:195-204.

Schwab, S. and Reeves, F.B. 1981. The role of endomycorrhizae in revegetation practices in the semi-arid west. III. Vertical distribution of vesicular-arbuscular VA mycorrhiza inoculum potential. American Journal of Botany 68:1293-1297.

Sieverding, E. 1989 . Ecology of VAM fungi in tropical agrosystems. Agriculture, Ecosystem and Environment 29:369-390.

Sieverding, E. 1991. Vesicular-arbuscular mycorrhiza management in tropical agrosystems. Deutsche Gesellschaft fur Technische Zusammenarbeit, Germany.

Smith, S.E. 1980. Mycorrhizas in autotrophic higher plants. Biological Reviews 55:475-510.

Tinker, P.B. 1975. Soil chemistry of phosphorus and mycorrhizal effects on plant growth. Pp 353-371 *in*: Endomycorrhizas. Sanders, F.E., Mosse, B. and Tinker, P.B. Academic Press, London.

Trappe, J.M., Molina, R. and Castellano, M. 1984. Reactions of mycorrhizal fungi and mycorrhiza formation to pesticides. Annual Review of Phytopathology 22:331-359.

Developing a gene transfer system for VAM fungi of the genus *Gigaspora* (Zygomycetes, Glomales).

S.B. Persad-Chinnery and R.B.G. Dales
Department of Biology, University of the West Indies,
Cave Hill Campus, P.O. Box 64, Bridgetown, Barbados.

Abstract

Vesicular-arbuscular mycorrhizal (VAM) mutualisms enhance almost all plant productivity in natural and agro-ecosystems. Attempts are being made to manipulate the fungal symbiont through the development of a direct gene transfer (transformation) system for *Gigaspora* using *G. decipiens*, *G. margarita* and *G. rosea*. A nuclear cytology study has been conducted on germ-tubes, pre-infection hyphae, intraradical hyphae and extraradical hyphae of *G. decipiens* and *G. rosea* to determine the most appropriate stage of the fungal life-cycle to target for transformation. Putative mitotic nuclei were observed within intra- and extraradical hyphae and it was decided that the latter are more suitable for transformation since they are free of root material. Spores of *G. decipiens* and *G. rosea* were tested for their sensitivities to the antibiotics, hygromycin and neomycin. Preliminary results show that both species are sensitive to each antibiotic at a concentration of 5.0 g ml^{-1}. A comparison of these sensitivity values with those obtained for other eukaryotes indicates that hygromycin or neomycin resistance can be used as a selectable marker in a direct gene transfer system for these VAM fungi. A genomic DNA library is being constructed from *G. margarita*, as an initial step in the isolation and identification of a *Gigaspora* promoter. Subsequent steps for obtaining a *Gigaspora* promoter and its use in the construction of a suitable transformation vector will be discussed.

Key words: mycorrhizas, protoplasts, biolistics, promoter

Introduction

Most plants in natural ecosystems have mycorrhizal associations. Vesicular-arbuscular mycorrhizas (VAM) are highly coevolved mutualistic associations between most vascular plants and soil fungi of the class Zygomycetes. The relation between the host plant and the fungus is such that the host receives mineral nutrients, especially phosphorus, via the fungus and the fungus obtains photo-synthetically derived carbon compounds from the host. VAM fungi are obligately dependent upon the host plant for carbon since they are very weakly saprophytic and as such they cannot gain sufficient carbon from residual organic matter for survival.

VAM fungi increase plant productivity by improving the water relations of plants (Allen *et al.*, 1981), improving the survival rate of transplanted seedlings (Mosse and Hayman, 1971), increasing plant growth (Smith, 1980; Nielsen, 1990), enhancing plant disease resistance (Morandi *et al.*, 1984; Feldmann *et al.*, 1989; Caron, 1989), enhancing reproduction (Koide *et al.*, 1988) and ameliorating competition between large plants and seedlings (Eissenstat &

Newman, 1990). However, improved phosphorus uptake has consistently proven to be the primary factor providing the benefit of improved plant productivity (e.g. Baas & Kuiper, 1989; Menge, 1978; Michelsen & Rosendahl, 1990). VAM fungi extend the surface area of the roots so the mycorrhizal root system can explore a greater volume of soil for phosphorus. Soil phosphorus is present in three forms, phosphates in soil solution, organic phosphates that eventually become soluble phosphates and insoluble mineral phosphates held in crystal lattices. Phosphates are very immobile in soil and hence depletion zones develop around the roots, especially in soils low in this macronutrient. The smaller diameter of the hyphae allows the fungus to explore smaller pore spaces than roots and root hairs. Some studies suggest that VAM fungi can alter unusable forms of phosphorus (i.e. mineral and organic phosphates) and so make them available to the plant (Brundrett, 1991).

No genetic systems are known for VAM fungi. These fungi do not grow *in vitro* in the absence of plant roots and even in cultures in the presence of plant roots, fungal growth frequently ceases. No sexual stages have been identified conclusively for VAM fungi and it seems that the development of a direct gene transfer system is the only method by which fungal manipulation at a genetic level can be achieved. The work presented in this paper represents a series of progressive steps in the development of a transformation system for VAM fungi of the genus *Gigaspora* using *G. decipiens* Hall & Abbott, *G. margarita* Becker & Hall and *G. rosea* Nicolson & Schenck.

Materials and methods

Nuclear cytology of *G. decipiens* and *G. rosea*

Five categories of hyphae were examined to investigate nuclear behaviour: (a) germ-tubes which are unbranched hyphal protrusions of up to 5 mm in length, (b) pre-infection hyphae which are hyphae that extend beyond the length of germ-tubes but have not established mycorrhizal symbiosis with a root and may have branched, (c) pre-infection hyphae in the presence of tissue cultured whole plants or transformed carrot (*Daucas carota* L.) root cultures, (d) intraradical hyphae which are hyphae formed within a mycorrhizal root and (e) extraradical hyphae which refer to hyphae that grow into the soil from a mycorrhizal root. All samples were stained with 1.0μg ml^{-1} DAPI (4,6-diamidino-2-phenylindole) made up in 5 % Nonidet P40 and viewed under epifluorescence and phase contrast microscopy. Germ-tubes and pre-infection hyphae were sometimes fixed in 2 % glutaraldehyde prior to nuclear staining. In order to observe intra- and extraradical hyphae leek mycorrhizas were cut into lengths of approximately 5 mm and fixed overnight in 2 % glutaraldehyde. They were washed in distilled water and cleared in 0.05 % (v/v) lactic acid at 60 °C for one hour. These sections of mycorrhizas were subsequently washed and cooked in distilled water at 60 °C for another hour. The sections were then squashed on a microscope slide and stained with DAPI.

Antibiotic sensitivity tests

Approximately 40 spores of *G. decipiens* or *G. rosea* were surface decontaminated in 5 % (wt/vol) Chloramine T by the method of Tommerup and Kidby (1976) and germinated in sterile multiwell dishes, with each well containing 1.0 ml of 3.2 unit ml^{-1} cellulase from *Trichoderma reesei* (Persad-Chinnery *et al.*, in press) containing either hygromycin or neomycin. Concentrations of 5, 10, 15, 25 or 40μg ml^{-1} of each antibiotic were used.

Construction of a VAM fungal genomic library in the cosmid pWE15

DNA was gently isolated from 400 spores of *G. margarita* by a modification of the VAM fungal DNA isolation method used by Burggraaf and Beringer (1989). Spores were surface decontaminated as before, crushed in 0.45 mM EDTA, 1 %(wt/v) SDS, 10 mM Tris.Cl (pH 8.0) and 1.0 mg ml^{-1} Proteinase K, and incubated for a minimum of 4 hours. The DNA was treated with 1.0 mg ml^{-1} DNA-free RNase and precipated in 7.5 M ammonium acetate and 95 % ethanol. The DNA was pelleted by centrifugation at 1200xg and redissolved in TE buffer (pH 8.0). VAM fungal DNA fragments of between 29 and 44 kb were ligated into the cosmid pWE15 (Stratagene). It is intended to package the cosmid construct into lambda phage heads (Promega Packagene kit) and select transductants in *E. coli* LE392 using ampicillin resistance. The library will be replicated and stored at -20 °C for further analysis. The VAM DNA fragments can be easily excised from pWE15 which has two *Not* 1 sites flanking the cloning site.

Results and discussion

Very little information has been published on the nuclear cytology of VAM fungi. To date only the multinucleate nature of spores and germ-tubes have been reported (Cook *et al.*, 1987). No mitotic structures were observed in germ-tubes and pre-infection hyphae. However, putative mitotic structures were observed in intra- and extra-radical hyphae. It is believed that a transformation system is likely to be more successful in regions of hyphae in which nuclei are dividing (especially if biolistics is used for gene transfer) or in protoplasts containing nuclei in mitosis. As extraradical hyphae are free of root material they are more suitable to target for transformation than intraradical hyphae.

Preliminary results indicated that sensitivity in both species of *Gigaspora* is achieved at concentrations greater than 5μg ml^{-1} for either hygromycin or neomycin. However, these experiments are going to be repeated with concentrations of antibiotics less than 5μg ml^{-1} to determine the minimum concentration of each antibiotic that will elicit a sensitivity response in the fungi. Most plants have a hygromycin sensitivity value between 25 - 200μg ml^{-1} and work done on several strains of *Frankia* (Actinomycetes) determined a neomycin sensitivity range of 1 - 20μg ml^{-1}. The antibiotic sensitivity tests of *G. decipiens* and *G. rosea* indicate that it is likely that hygromycin or neomycin resistance can be used as a selectable marker in the development of a gene transfer system for VAM fungi.

Unlike eukaryotic plant promoters which, are fairly non-specific, fungal promoters seem specific for their respective class. For example, basidiomycete promoters do not function in Ascomycetes and vice versa. VAM fungi are members of the Zygomycetes and it is thought that a zygomycetous fungal promoter may be needed in the development of a transformation system for these fungi. DNA was isolated from VAM fungal spores as an initial step in the construction of a genomic DNA library and ultimately in the identification of a VAM fungal promoter.

At present a DNA sequence data base (GenBank) is being searched for the sequences of fungal actin genes. These are highly conserved sequences and since actin is probably expressed continuously in fungal cells the promoter is likely to be a strong one. The actin sequences obtained from the data base will be compared in order to identify conserved regions within the gene sequences. Depending on the positions of the conserved regions in relation to the upstream end of the actin sequence it may be possible to synthesise two oligonucleotide primers, complementary to conserved, upstream actin sequences. These primers can then be used to amplify this region of the actin gene from the VAM fungal genome using the polymerase chain reaction (PCR).

The PCR product of the amplified actin sequence will be used to probe the cosmid library. The probe should only hybridize to recombinant clones containing the actin gene sequence. The VAM DNA from these recombinant clones will be physically mapped using a range of restriction enzymes. Agarose gels of restriction enzyme digests will be Southern blotted and probed with the PCR product to locate those fragments containing the actin sequence. These and contiguous fragments will be sub-cloned into pBluescript (Stratagene) and sequenced. The *Gigaspora* actin promoter region will be identified by DNA sequence analysis.

Having obtained a *Gigaspora* promoter, it can then be sub-cloned into a suitable plasmid vector carrying a promoterless hygromycin or neomycin gene. This plasmid construct may be suitable for use in an attempt to develop a transformation system for VAM fungi. Three direct gene transfer methods will be considered to transform these VAM fungi, DNA uptake by protoplasts using either PEG or electroporation, and biolistics. A potential problem with the first two methods is that a protoplast isolation procedure for VAM fungi is still being developed and nothing is known of the regenerative ability of these fungi. The use of microprojectiles in transformation appears to be a promising alternative providing that the appropriate physical and biological factors can be determined for the execution of successful hits.

If biolistics is to be used in an attempt to transform VAM fungi then a transformation detection system must be developed. The ß-glucuronidase (GUS) gene from *E. coli* has been developed and used extensively as a scorable marker in plant transformation experiments. The use of this gene over other markers in the development of a transformation detection system for VAM fungi offers two main advantages, firstly there are sensitive assay systems to quantify or localise the expression of the enzyme and secondly these assay systems should be applicable to fungi without the worry of background activity to interfere with the assay. Substrates for the ß-glucuronidase enzyme include methylumbeliferylglucuronide (MUG) which is broken down to give the easily quantified fluorogenic compound methylumbeliferone (MU), and the compound 5-bromo-4-chloro-3-indoly-glucuronide (X-GLUC) which is broken down to give the indigo dye whose presence can indicate the site of expression of the gene. Germ-tubes from spores and extra-radical VAM fungal hyphae are presently being tested for inherent ß-glucuronidase activity. This will determine if the GUS gene can be used in a detection assay for VAM fungi. If there is little or no inherent GUS activity in VAM fungi, the *Gigaspora* promoter can be inserted upstream of a promoter-less GUS gene to provide a cassette for use in a transformation detection system. The plasmid pRAJ275 carries a promoter-less GUS gene and an upstream restriction site into which the *Gigaspora* promoter can be cloned and it is intended that it be used for this purpose.

The development of a transformation system for VAM fungi can be used to manipulate the mycorrhizal symbiosis to improve crop production and to further understand the mycorrhizal association. Additionally it may be possibe that through a transformation system, continued *in vitro* VAM fungal growth might be achieved. If unrestricted VAM fungal growth becomes a reality then large amounts of inoculum can be produced for field application.

Acknowledgements

This research was supported under Grant No. 534-0936-G-00-9118, Program in Science and Technology Cooperation, Office of the Science Advisor, U.S. Agency for International Development. pRAJ276 was kindly provided by Dr. V. Buchanan-Wollaston, Wye College, University of London. Tissue cultured plants were provided by CARDI, Barbados. Carrot roots were transformed by Mr. L. Waterman, Cave Hill, U.W.I.

References

Allen, M. F., Williams, K. S., Thomas, S. M. Jr. and Martha, C. (1981). Comparative water relations and photosynthesis of mycorrhizal and non-mycorrhizal *Bouteloua gracilis* H.B.K. Lag. Ex Steud. *New Phytologist* 88 : 683-693.

Baas, R. and Kuiper, D. (1989). Effects of vesicular-arbuscular mycorrhizal infection and phosphate *Plantago major* s sp. *pleiosperma* in relation to internal cytokinin concentrations. *Physiologia Planatarum* 76 : 211-215.

Brundrett, M. (1991). Mycorrhizas in natural ecosystems. *Advances in Ecological Research* 21 172 - 313.

Burggraaf, A. J. P. and Beringer, J. E. (1989). Absence of nuclear DNA synthesis in vesicular-arbuscular mycorrhizal fungi during *in vitro* development. *New Phytologist* 111 : 263-267.

Caron, M. (1989). Potential use of mycorrhizae in control of soil-borne diseases. *Canadian Journal of Plant Pathology* 11 : 177-179.

Cook, J. C., Gemma, J. N. and Koske, R. E. (1987). Observations of nuclei in vesicular-arbuscular mycorrhizal fungi. *Mycologia* 79 : 331-333.

Eissenstat, D. M. and Newman, E. I. (1990). Seedling establishment near large plants: effects of sicular-arbuscular mycorrhizas on the intensity of plant competition. *Functional Ecology* 4 : 95-99.

Feldmann, F., Junqueira, N.T.V. and Lieberei, R. (1989). Utilization of VAM as a factor in integrated plant protection. *Agriculture, Ecosystem and Environment* 29 : 131-135.

Koide, R., Li, M., Lewis, J. and Irby, C. (1988). Role of mycorrhizal infection in the growth and production of wild vs. cultivated plants. I. Wild vs. cultivated oats. *Oecologia* 77 : 537 - 543.

Menge, J. A. (1978). Partial substitution of mycorrhizal fungi for phosphorus fertilization in the greenhouse culture of citrus. *Soil Science Society of America Journal* 42 : 926-930.

Michelsen, A. and Rosendahl, S. (1990). The effect of VA mycorrhizal fungi, phosphorus and drought stress on the growth of *Acacia nilotica* and *Leucaena leucocephala* seedlings. *Plant & Soil* 124 : 7-13.

Morandi, D., Bailey, J. A. and Gianinazzi-Pearson, V. (1984). Isoflavonoid accumulation in soybean roots infected with VAM fungi. *Physiological Plant Pathology* 24 : 357-364.

Mosse, B. and Hayman, O. J. (1971). Plant growth responses to vesicular-arbuscular mycorrhiza (VAM). II. In unsterilised field soils. *New Phytologist* 70 : 29-34.

Neilsen, J. D. (1990). The effect of VAM on growth and uptake of nutreints for lucerne. *Agriculture, Ecosystem and Environment* 29 : 99-104.

Persad-Chinnery, S. B., Chinnery, L. E. and Dales, R. B. G. (in press). Enhancement of *in vitro* spore germination of *Gigaspora rosea* by a cellulase preparation. *Mycological Research.*

Smith, S. E. (1980). Mycorrhizas in autotrophic higher plants. *Biological Reviews* 55 : 475-510.

Tommerup, I. C. and Kidby, D. K. (1976). Production of aseptic spores of vesicular-arbuscular (VAM) endophytes and their viability after chemical and physical stress. *Applied and Environmental Microbiology* 39 : 1111-1119.

Protoplast isolation and amplification of ribosomal DNA from VAM fungi of the genus *Gigaspora*

L. D. Waterman and Richard B. G. Dales
Department of Biology,
University of the West Indies, Cave Hill Campus,
P. O. Box 64, Bridgetown, Barbados

Abstract

Attempts to liberate protoplasts from hyphae of the vesicular-arbuscular mycorrhizal fungi *Gigaspora decipiens* and *G. rosea* using mixtures of commercially available lytic enzymes and an extracellular chitosanase enzyme prepared from a streptomycete are described. DNA from spores of *G. decipiens*, *G. margarita* and *G. rosea* has been extracted and visualised by agarose gel electrophoresis. The nuclear 5.8S ribosomal DNA sequence and the two flanking internal transcribed spacers of *G. margarita* have been amplified by the polymerase chain reaction and the sizes of the fragments estimated.

Introduction

Vesicular-arbuscular mycorrhizae (VAM) are mutualistic associations that have evolved between many families of plants and filamentous fungi of the class Zygomycetes (Morton and Benny, 1990). The fungi infect roots of host plants and enhance the mineral nutrition of the plants while receiving photosynthates in return (Ho and Trappe, 1973). To date there have been no reproducible reports of success in growing VAM fungi in pure culture and the fungi are still thought to be obligate symbionts. Most published research on VAM fungi has concentrated on the beneficial nature of the symbiosis and the ecology of the fungi. No genetic analysis of VAM fungi has been published and the first DNA sequence from any of the fungi has only recently been reported (Simon *et al.*, 1992).

Methods for the production and fusion of protoplasts from many filamentous fungi are well established (Peberdy, 1979), but protoplast formation in VAM fungi has not been reported. Genetical methods, using either naturally-occurring sexual systems, if any such systems exist, or *in vitro* gene transfer, are not currently available for studying or manipulating VAM fungi. Transformation of VAM fungi could provide a technique for studying the genetic and biochemical interaction between the fungi and their hosts, and may allow localised expression of beneficial genes in plant roots. One possible transformation technique would involve the uptake of exogenous DNA by protoplasts. It has been reported that nuclear division could not be demonstrated *in vitro* during or after spore germination in *Gigaspora margarita* Becker and Hall (Burggraaf and Beringer, 1989). Investigations on nuclear cytology in *G. decipiens* Hall and Abbott and *G. rosea* Nicol. and Schenck suggest that nuclear division may be occurring in extraradical hyphae of these species (Persad-Chinnery and Dales, this volume). It is thought that fungal material containing dividing nuclei would be best suited for transformation and it is therefore intended to isolate protoplasts from extraradical hyphae of *G. decipiens* and *G. rosea* as an initial stage in the development of a transformation system for these fungi. Farkas (1990) has reported that the principal cell wall component of Zygomycete fungi is chitosan. Chitosan is a linear polymer of ß-1,4 linked D-glucosamine. Enzymes that degrade fungal chitosan are not commercially available and chitinases and other polysaccharide hydrolases are not able to degrade chitosan. However, micro-organisms are known to produce chitosanases.

The fungi forming VAM are usually identified by the morphological and ontological characteristics of their asexual spores and the composition and number of sublayers of their spore walls. The ability to identify these fungi therefore depends on the availability of spores. This method can be time-consuming and there are difficulties in distinguishing and enumerating the wall sublayers. In contrast a method based on analysis of DNA from the fungi would enable the identification of these fungi even when spores are not available, as in infected root tissue, and could be more confidently reproduced.

The nuclear ribosomal RNA (rRNA) genes in fungi and other eukaryotes are highly conserved. These sequences occur in tandem repeats separated by nontranscribed spacers. The rRNA genes within each repeat are separated by transcribed regions known as internal transcribed spacers (ITS). The rates of evolution of the genes and spacers differ as the genes are highly conserved whereas the spacers evolve more rapidly and are known to vary between genera and between species within a genus. Comparative analysis of DNA in spacer regions has been used to analyse the phylogenetic relationships of other organisms. Analysis of ribosomal DNA regions in VAM fungi should yield useful information regarding their taxonomic relations to each other and other fungal groups.

Materials and Methods

Spore production, recovery and germination

Soils containing spores of *G. rosea* and *G. decipiens* were received from the International Culture Collection of VAM Fungi (INVAM), Plant Pathology Department, Institute of Food and Agricultural Sciences, The University of Florida. These soils and spores extracted from them were used to initiate vesicular-arbuscular mycorrhizae in pot cultures with onion (*Allium cepa*), leek (*A. porrum*) and carpet grass (*Axenopus compressus*) as host plants. Spores of *G. decipiens* and *G. rosea* were recovered from pot cultures while spores of *G. margarita* were recovered from sand on the East coast of Barbados. Spores were surface decontaminated in 5% Chloramine T (Sigma) for 15 minutes and germinated in 3.2 units ml^{-1} cellulase (Sigma) (Persad-Chinnery *et al.*, in press) in the dark at 28-30°C in multiwell dishes.

Axenic dual cultures

Following the method of Becard and Fortin (1988), carrot tap roots were transformed with *Agrobacterium rhizogenes*. Germinated spores were placed with pieces of transformed carrot root on White's medium amended with sucrose and solidified with agar, in Petri dishes or tissue culture boxes. At 14-day intervals samples of the roots were removed, stained and assessed for fungal infection.

Production of a chitosanase enzyme from a *Streptomyces* sp.

A culture of a streptomycete labelled no. 6 was obtained from Dr. Wöstermeyer, Institute für Genbiologische Forschung, Berlin, Germany. The streptomycete was grown in 1 l Erlenmeyer flasks containing 335 ml medium containing 0.5 g chitin (Sigma), 1.25 ml SL8 medium (Table 1), 0.3 ml of 1 M $MgSO_4$, 0.3 ml of 0.1 M $MgCl_2$, 16.5 ml basal medium (Table 1) and 1.5 g chitosan (Sigma). The flasks were incubated for 4 days at 28°C in a rotary shaker at 120 rpm. Crude chitosanase was prepared by precipitation with ammonium sulphate, dialysis against several changes of 20 mM sodium phosphate buffer and lyophilisation.

Table 1

Composition of SL8 and Basal media

Components	SL8 medium ($g\ l^{-1}$) pH 6.7	Basal medium ($g\ l^{-1}$)
K_2HPO_4	-	16
KH_2PO_4	-	4
$(NH_4)_2SO_4$	-	10
Na_2EDTA	5.2	-
$FeCl_2$	1.5	-
$ZnSO_4.7H_2O$	0.148	-
$MnCl_2.4H_2O$	0.1	-
H_3BO_3	0.062	-
$CoSO_4$	0.062	-
$Na_2MoO_4.2H_2O$	0.036	-
$CuSO_4$	0.016	-
$NiCl_2$	0.013	-

Protoplast production

The crude chitosanase preparation was tested for its ability to liberate protoplasts from hyphae of *Rhizopus stolonifer* (Zygomycetes). Following successful protoplasting of hyphae of *Rhizopus*, mixtures of chitosanase, NovoZym™ and chitinase were applied to hyphae and germ tubes of *G. decipiens* and *G. rosea*.

DNA extraction

DNA was isolated from surface-decontaminated spores of *G. decipiens*, *G. margarita* and *G. rosea* following the method of Burggraaf and Beringer (1989). After at least 4 hours incubation in the DNA isolation mixture, the DNA was treated with RNase and precipitated with ammonium acetate and ethanol.

DNA amplification

For PCR, 25μl sterile distilled H_2O, 5μl *Taq* 10X polymerase buffer (Promega), 1.5 mM $MgCl_2$, 0.2 mM each dNTP and 0.5μM each primer were placed in a sterile 500μl microcentrifuge tube. Template DNA (5μl of ~10 ngμl^{-1}) was added and the reaction mixture overlayed with 50μl of light mineral oil. Reaction tubes were heated to 94°C in a GTC-2 Genetic Thermal Cycler (Precision Scientific) for 3 minutes. While at this temperature, 1μl *Taq* polymerase (Promega, 5 units μl^{-1}) was added to each tube and the tubes were subjected to the following amplification programme: denaturation for

2 min at 94°C for the first cycle, 1 min for 35 cycles; annealing for 30 sec at 53°C for the first cycle, 30 sec at 65 to 70°C for 35 cycles (depending on the primer pair used); and polymerization for 1 or 2 min (depending on the target size) at 72°C for 35 cycles, 10 minutes for the final cycle. Following PCR, 10μl of each reaction was analysed on a 1.2% agarose gel and the fragment sizes estimated.

Results and Discussion

Extraradical hyphae appear to contain dividing nuclei and these have been targeted for our efforts on protoplast formation. The first step in this approach involved the production of axenic roots that could be cultured with VAM fungi to produce *in vitro* mycorrhizas that could generate extraradical hyphae. Root organ cultures using *Agrobacterium rhizogenes* proliferated carrot roots were successfully established and co-cultured with germinated spores of *G. decipiens* and *G. rosea*. In many dual cultures fungal hyphae proliferated over the roots and into the agar but staining showed that penetration of growing roots had not occurred. The concentrations of media components, principally sucrose and phosphate, reported to influence mycorrhizal formation were altered in successive experiments but mycorrhizal formation was not promoted. Uncontaminated co-cultures were kept for several months without any evidence of infection although fungal hyphae were observed to grow much more than hyphae of germinated spores kept in germination medium.

There are few reports of extensive VAM production from dual cultures of this nature (*e.g* Mosse and Hepper, 1975; Mugnier and Mosse, 1987; Becard and Fortin, 1988) and none using *G. decipiens* or *G. rosea*. Although some factors involved in the infection process and chemicals that affect VAM formation have been studied (*e.g* Mugnier and Mosse, 1987; Becard and Fortin, 1988), the determinants of the symbiosis remain unclear. It is also known that there are differences in the responses of various VAM fungal species to chemicals added to culture media and to plant species used in culture.

It has been reported that new hyphae have been observed growing out of old intraradical hyphae of dried root segments (Tommerup and Abbott, 1981). Experiments were conducted to determine whether aseptic extraradical hyphae could be produced from infected roots retrieved from pot cultures. Contamination of the cultures of roots removed from pot cultures was minimal during the first week and hyphae were visible extending from some root pieces. During the second week of observation the extraradical hyphae showed no growth and eventually the cultures became contaminated with other fungi. Increasing either the strength of the decontaminating solution or the length of time of exposure of roots resulted in a reduction in contamination but also in a reduction in the number of cultures in which extraradical hyphae were observed. In general extraradical hyphae showed no extension beyond about 500μm.

From 1700 ml of *Streptomyces* culture medium approximately 100 mg of protein precipitate was usually obtained. NovoZym™ 234 at 2.5 mg ml^{-1}, chitinase at 0.5 mg ml^{-1} and chitosanase at 0.75 mg ml^{-1} in KCl (0.6 M) or sorbitol (0.55 M) were the optimum conditions for liberation of protoplasts from *Rhizopus* in 2 hours. NovoZym™ 234 and chitinase at these concentrations without the chitosanase did not induce protoplast production. In the absence of uncontaminated extraradical hyphae, germ tubes and hyphae of germinated spores were tested for the production of protoplasts. After overnight incubation at several times the enzyme concentrations that released protoplasts from *Rhizopus* hyphae, no protoplasts were liberated from VAM fungal material. It is possible that the cell wall material that is inhibiting protoplast release is protein. This work will be continued using reducing agents before adding the lytic enzyme mixture or by treatment of VAM fungal hyphae with proteases before and after the lytic enzyme mixture. An enzyme extract to be produced from *Paecilomyces lilanus* will be tested on VAM fungal hyphae.

By optimising the protocol for DNA extraction we have been able to isolate, visualise and photograph DNA from one spore of *G. decipiens*. Other published methods of DNA isolation from VAM spores used many more spores in their procedures. Cummins and Wood (1989) reportedly used 600,000 spores, while Burggraaf and Beringer (1989) used 50 or more spores. A value of approximately 1.5 ng DNA per spore (*G. rosea*) was obtained by fluorimetric comparison of DNA from 1 - 20 spores with DNA from lambda phage.

Table 2

Primers for amplification of fungal ribosomal RNA genes

PRIMER	PRIMER SEQUENCE
ITS1-*Bam*HI	5'-CGGGATCCGTAGGTGAACCTGCGG-3'
ITS2-*Eco*RI	5'-GGAATTCCGCTGCGTTCTTCATCGATGC-3'
ITS3-*Bam*HI	5'-CGGGATCCGCATCGATGAAGAACGCAGC-3'
ITS4-*Eco*RI	5'-GGAATTCCTCCGCTTATTGATATGC-3'

Primers used for PCR were modified from those published by White *et al.*, (1990) by the addition of 4 to 8 bases at their 5' ends such that recognition sites for restriction endonucleases *Bam*HI and *Eco*RI were created (Table 2). The primers make use of conserved regions of 18S, 5.8S and 28S rRNA genes of fungi and amplify the 5.8S rRNA gene along with the flanking internal transcribed spacers. Primers were used in three pairs (Fig. 1): ITS-*Bam*HI and ITS2-*Eco*RI to amplify the upstream internal transcribed spacer (ITSA), ITS3-*Bam*HI and ITS4-*Eco*RI to amplify the 5.8S rRNA gene and the downstream internal transcribed spacer (ITSB), and ITS1-*Bam*HI and ITS4-*Eco*RI to amplify the 5.8S rRNA gene and both spacers. The fragment amplified from *G. margarita* using primers ITS1-*Bam*HI and ITS4-*Eco*RI was estimated to be 510 bp. ITSA was estimated to be 180 bp while the product amplified by ITS3-*Bam*HI and ITS4-*Eco*RI was estimated to be 315 bp. The sizes of the fragments amplified from *G. margarita* compare well with published sizes of similar fragments amplified from other fungi (*e.g.* White *et al.*, 1990).

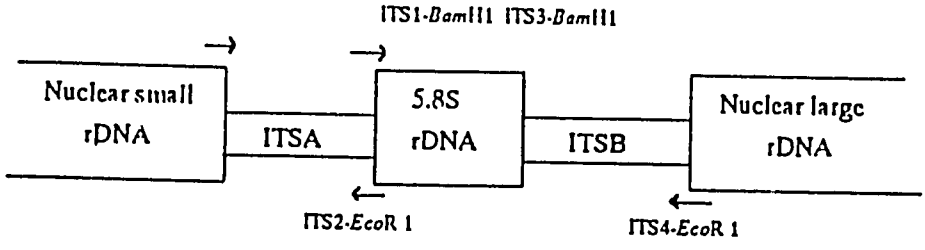

Figure 1

Locations on nuclear rDNA of PCR primers used.

Arrowheads represent the 3' end of each primer. Diagram not to scale.

It is intended to develop a method for the identification of these fungi based on the analysis of DNA extracted from spores. PCR products will be sequenced and used as probes in Southern hybridizations with total genomic DNA to confirm that *Gigaspora* DNA has been amplified. The product sequences will be used for the design of species-specific primers that will allow the confirmation of the presence of particular species even in a mixed population. This method will be applied to the identification of species of VAM fungi infecting plant roots. These protocols once developed should be very useful for analysing the taxonomy and population biology in identifying species of VAM fungi.

Acknowledgements

This research was supported under Grant No. 534-0936-G-00-9118, Program in Science and Technology Cooperation, Office of the Science Advisor, U. S. Agency for International Development.

References

Becard, G. and Fortin, J. A. (1988). Early events of vesicular-arbuscular mycorrhiza formation on Ri T-DNA transformed roots. *New Phytol* 108 : 211-218.

Burggraaf, A. J. P. and Beringer, J. E. (1989). Absence of nuclear DNA synthesis in vesiculararbuscular mycorrhizal fungi during *in vitro* development. *New Phytol* 111 : 25-33.

Cummins, B. and Wood, T. (1989). A simple and efficient method for isolating genomic DNA from endomycorrhizal spores. *Gene. Anal. Techn.* 6 : 89-92.

Farkas, V. (1990). Fungal cell walls: their structure, biosynthesis and biotechnological aspects. *Acta Biotechnol.* 10 : 225-238.

Ho, I. and Trappe, J. M. (1973). Translocation of ^{14}C from *Festuca* plants to their endomycorrhizal fungi. *Nature* 244 : 30-31.

Morton, J. B. and Benny, G. L. (1990). Revised classification of arbuscular mycorrhizal fungi (Zygomycetes): a new order, Glomales, two new suborders, Glominae and Gigasporinae, and two new families, Acaulosporaceae and Gigasporaceae, with and emendation of Glomaceae. *Mycotaxon* 37 : 471-491.

Mosse, B. and Hepper, C. M. (1975). Vesicular-arbuscular mycorrhizal infections in root-organ cultures. *Physiol. Plant Pathol.* 5 : 215-233.

Mugnier, J. and Mosse, B. (1987). Vesicular-arbuscular mycorrhizal infection in transformed root-inducing T-DNA roots grown axenically. *Phytopathol.* 77 : 1045-1050.

Persad-Chinnery, S. B., Chinnery, L. E. and Dales, R. B. G. Enhancement of *in vitro* spore germination of *Gigaspora rosea* (Zygomycete: Glomales) by a cellulase preparation. *Mycol. Res.* (in press).

Peberdy, J. F. (1979). Fungal protoplasts: isolation, reversion and fusion. *Ann. Rev. Microbiol.* 33 : 21-39.

Simon, L., Lalonde, M. and Bruns, T. D. (1992). Specific amplification of 18S fungal ribosomal genes from vesicular-arbuscular mycorrhizal fungi colonizing roots. *Appl. Environ. Microbiol.* 58 : 291-295.

Tonmerup, I. C. and Abbott, L. K. (1981). Prolonged survival and viability of VAM hyphae after root death. *Soil Biol. Biochem.* 13 : 431-433.

White, T. J., Bruns, T., Lee, S. and Taylor, J. Amplification and direct sequencing of fungal ribosomal RNA genes for phylogenetics. In *PCR Protocols A Guide to Methods and Applications* (eds Innis, M. A., Gelfand, D. H., Sninsky, J. J. and White, T. J.) pp. 315-322. Acad. Press, San Diego.