PN-ABT-171
911216
3E-06

DEVELOPMENT OF A LOW-COST GRAIN DRYER

A Project Funded by the U.S. Agency for International Development

Economic Development Foundation

Rec'd in SCI: MAR 1 4 1985

Economic Development Foundation

March 4, 1985

Mr. Richard Stevenson
Energy Officer
Office of Rural Agriculture
Development
U.S. Agency for International
Development
Roxas Boulevard, Metro Manila

Dear Mr. Stevenson:

This is our final report on the project, "Development of a Low-Cost Grain Dryer."

Three grain dryer models (5-, 15- and 20-cavan capacities) were designed and field-tested in Nueva Ecija and Tarlac provinces. Generally, farmers who witnessed the demonstrations and field tests were impressed with the dryer's simplicity of design and low cost. Several government agencies and other private groups have also expressed interest in the dryer and have requested for assistance in installing one in their area.

Based on the actual cost of the field models the dryers are estimated to cost ₱3,500, ₱5,500 and ₱7,000 for the 5-, 10- and 20-cavan dryer, respectively. These figures are actually more than twice our original estimates because of inflationary increases in cost of materials.

However, given the difference in price of wet and dry palay of ₱2.10 and ₱3.35 per kilogram, respectively,(or about ₱35/cavan), the farmer should be able to recover his investment on the dryer in less than one year.

Main Office.

8th Floor, Bankmer Building, Ayala Avenue
Makati, Metro Manila, Philippines/Tels 883334,
895164, 882950, 882989, 883239, 883364

Human Resources Management
and Development Services:
7th Floor, Combank Building, Ayala Avenue
Makati, Metro Manila, Philippines
Tels 892237, 895168, 876202, 863189, 857264

MCC P O Box 370 Makati, Metro Manila/Cable EDEFOINC

C O N T E N T S

		Page
	LETTER OF TRANSMITTAL	
I.	INTRODUCTION	1 - 2
	A. Background	1
	B. Objectives and Scope of the Project	1
	C. Methodology	1
	D. Summary of Project Activity	2
II.	DRYER DESIGN DEVELOPMENT	3 - 32
	A. Review of Local Grain Dryer Designs	3
	B. Development of Pilot Scale Model	7
III.	FIELD EVALUATION OF THE DRYER SYSTEM	33 - 44
	A. Objective of the Field Evaluation	33
	B. Field Evaluation Approach	33
	C. Field Evaluation Proper	34
IV.	ECONOMIC ASSESSMENT	45 - 48
	A. Costs	45
	B. Benefits	47
	C. Payback	48
V.	TECHNOLOGY DISSEMINATION AND PROMOTION	49 - 56
	A. Demonstration	49
	B. Creation of Awareness	53
	C. Assessment of the Initial Results of the Promotional Drive	54
	Appendix	

I. INTRODUCTION

A. Background

The Philippines, a rice producing country, harvests a total of 140 million cavans (7 million MT) of rice yearly from about 3 million hectares of farm lands. However, large quantities of the product are lost or suffer in quality because of poor post-harvest processing, most commonly grain drying.

Whereas the early rice varieties had long maturity periods and harvest time usually coincided with sunny weather making traditional sun drying adequate, the new high-yielding, short-maturing rice strains have made sun drying impractical. Furthermore, the increased yield requires that large volumes of produce be dried within a short time.

In the Philippines, the moisture content of newly harvested rice paddy ranges from 20 to 26%, which is too wet for milling or storage. (The optimum moisture content for milling and storage is 14%). If quality is to be maintained, the paddy has to be dried as early as within 24 hours after harvesting for grains having more than 24% moisture, 48 hours for those with 21.0-23.9% moisture and within 3 days for grains with 15-20% moisture.

B. Objectives and Scope of the Project

The project sought to develop a low-cost grain dryer affordable by small farmers. Such a dryer should cost lower than the commercial models priced over US$1,000 is simple to operate and maintain, and its energy and other operating requirements are readily available in the area where it will be used.

The performance of the dryer would be evaluated through both laboratory and field tests and, once proved viable, the technology would be transferred to the small farmer through suitable promotional, marketing and extension activities.

C. Methodology

The project called for the construction of pilot model dryers and the conduct of drying runs at varying grain depth and drying temperatures to determine optimum drying conditions.

The results of these runs were compared with those of traditional sun drying. Further tests were made on the grains' acceptability for milling, head rice recovery, and germination potential.

The construction of the field models were based on pre-selection criteria for sites and cooperators. Tests runs were conducted and evaluated using results of the pilot models as the parameters.

The promotional/marketing activities were carried out on a step-ladder basis. Initially, the use of the dryer was promoted among the farmers and gradually expanded to include other farmers in other localities.

D. Summary of Project Activities

The project involved the following activities:

I. TECHNOLOGY DEVELOPMENT (July 1983-April 1984)

- A. Design Preparation
- B. Fabrication, Testing and Debugging of Test Models
- C. Technology Packaging

II. FIELD TESTS (February-November 1984)

- A. Selection/Cooperator of Site
- B. Construction
- C. Monitoring/Modification
- D. Assessment and Evaluation

III. TECHNOLOGY TRANSFER (June-December 1984)

- A. Promotion
- B. Extension Service
  - o Technology Assistance
  - o Monitoring
- C. Assessment and Evaluation

IV. REPORT PREPARATION (December-January 1985)

II. DRYER DESIGN DEVELOPMENT

Grain drying being a perennial problem among rice farmers, a number of studies have been made to yield designs that will meet the requirements of farmers. Following is a review of local developments in grain-drying technology.

A. Review of Local Grain Dryer Designs

Several grain dryers have been developed the most popular of which is the IRRI (International Rice Research Institute) batch-type flat-bed dryer. Other dryers are variations of this model and have common features, as follows:

1. Dryer Components

   a) Burner (Kerosene or rice hulls)

      - o gravity-flow, pot-type kerosene burner consisting of a bowl, baffle and cover
      - o rice hull furnace consisting of a rectangular firebrick chamber with combustion and ash settling sections

   b) Blower - Vane-axial type, driven by a 2-Hp electric motor or 3-Hp gasoline engine with a capacity of 1000 CFM at 20 cm. water head

   c) Grain bin - Made either of steel or wood with a grain floor of perforated steel sheet and a capacity of about 40 cavans (2 MT) of paddy rice.

2. Drying Conditions

   a) Drying air temperature: 43°C

   b) Drying rate : 23% moisture to 14% in 4 to 5 hours

   c) Fuel consumption power (for blower) : 0.75 liter gasoline/hr.

   d) Heating medium : 2.0 liters kerosene/hr. or 3-4 kg. rice hulls/hr.

More than 10 companies are producing these dryers some of which have been in the business for over 10 years.

Table 1 shows the number of dryers installed up to 1979. The owners and average capacities per unit were as follows:

National Grains Authority (3.5 MT/day): 30%

Private
15 MT/day : 20%
6 MT/day : 50%

The dryers are mostly batch type, with oil-fired furnaces and gasoline- or electric-powered blowers.

Table 1

NUMBER OF RICE DRYERS INSTALLED
As of 1979*

User	No. of Clients
National Grains Authority	875
Private	1,074
	1,949

Problems with Existing Commercial Dryers

The National Grains Authority estimated the total combined capability of the dryers to be 10,000 MT per day.

With the present national rice output of 7 million MT per year the dryer capacity required is about 79,000 MT per day (assuming 100 drying days per year). At a 3.5 MT-per day average capacity per unit, the number of units required is about 20,000 units or about 10 times the existing number of units.

The number of dryers sold in 1978 and 1979 was 63 and 73, respectively. Forty-six (46) units were sold in the first three quarters of 1980. While AMMDA estimated the total sales of dryers to average 580 per year for the next five years, this target has not been realized.

* Source: Agricultural Machinery Manufacturers and Dealers Association (AMMDA)

While empty oil drums may not be easily obtained in the rural areas, substitute materials and systems can be used as heat radiator. Among these are (1) thin-wall vitrified clay pipe and (2) thin-walled, flat-surface radiator.

With some modifications, this design may be adapted to Philippine conditions.

Dryer Design Criteria

To achieve the objective of a practical yet affordable grain dryer, the design would have to satisfy the following design criteria.

1. Capacities: Minimum of 1/5 ton (4 cavans) of paddy per 6 hours for individual users; one ton (20 cavans) per 6 hours for cooperative use

2. Heat Source: Furnace fired with agri wastes, e.g., rice hulls, rice straw, woodwaste, etc. A solar dryer is not suitable as the drying period coincides with the rainy season when sunlight is minimal. A petroleum-fired furnace, on the other hand, is also not considered practical because of its high operating cost

3. Transport of Drying Air: By natural convection, which is the cheapest in terms of both initial cost and operating cost (at the capacities envisioned). Forced draft (mechanical) dryers would be unaffordable.

4. Construction: On-site construction, preferably by the user himself, using materials indigenous to the area

5. Initial Cost: Not more than $100 for individual users; not more than $200 for cooperative users. Actual out-of-pocket costs should be significantly less than these amounts.

B. Development of Pilot Scale Model

Features

The dryer is of the induced-draft convection type. Two dryer designs were considered: one firewood-fired; the other rice hull fed.

The dryer consists of a furnace, an air heating element (empty oil drums or barrels) and a grain bed.

Firewood-fired

This type of dryer (see Figure 2a) has a total drying area of 6.7 sq.m. (72 sq. ft.) and a capacity of up to 5 cavans of palay.

Adobe blocks line the outside walls of the dryer while the furnace and the chimney base are of concrete hollow blocks. Empty 200 li oil drums are used for the heater; 4-inch soil pipes for the chimney.

The drying bed consists of a two-layered screen of 1/16 inch and 1-inch wire mesh fastened to 2" x 3" and 2" x 2" wood frames.

Rice-hull fed

This type of dryer (see Figure 2b) is basically the same as the first one except forthe following changes:

1. The furnace was redesigned
2. The bed is sloping
3. The walls are lined with concrete hollow blocks.

Drying Scheme

The drying scheme is shown in Figure 3.

Fuel rice hulls or wood wastes are burned in the furnace. The hot flue gas generated passes through the heater tube (empty oil drums) heating its walls, then exits at the chimney at the opposite end of the dryer.

At the base of the dryer, fresh air is inducted through small openings. On contact with the heated tube the air temperature is raised to 40-70°C. Fanned by a slight draft, the hot air moves across the grain mass absorbing moisture from the grains in the process.

The drying temperature can be regulated by varying the flow of air to the furnace and the amount of fuel and checked with the thermometer.

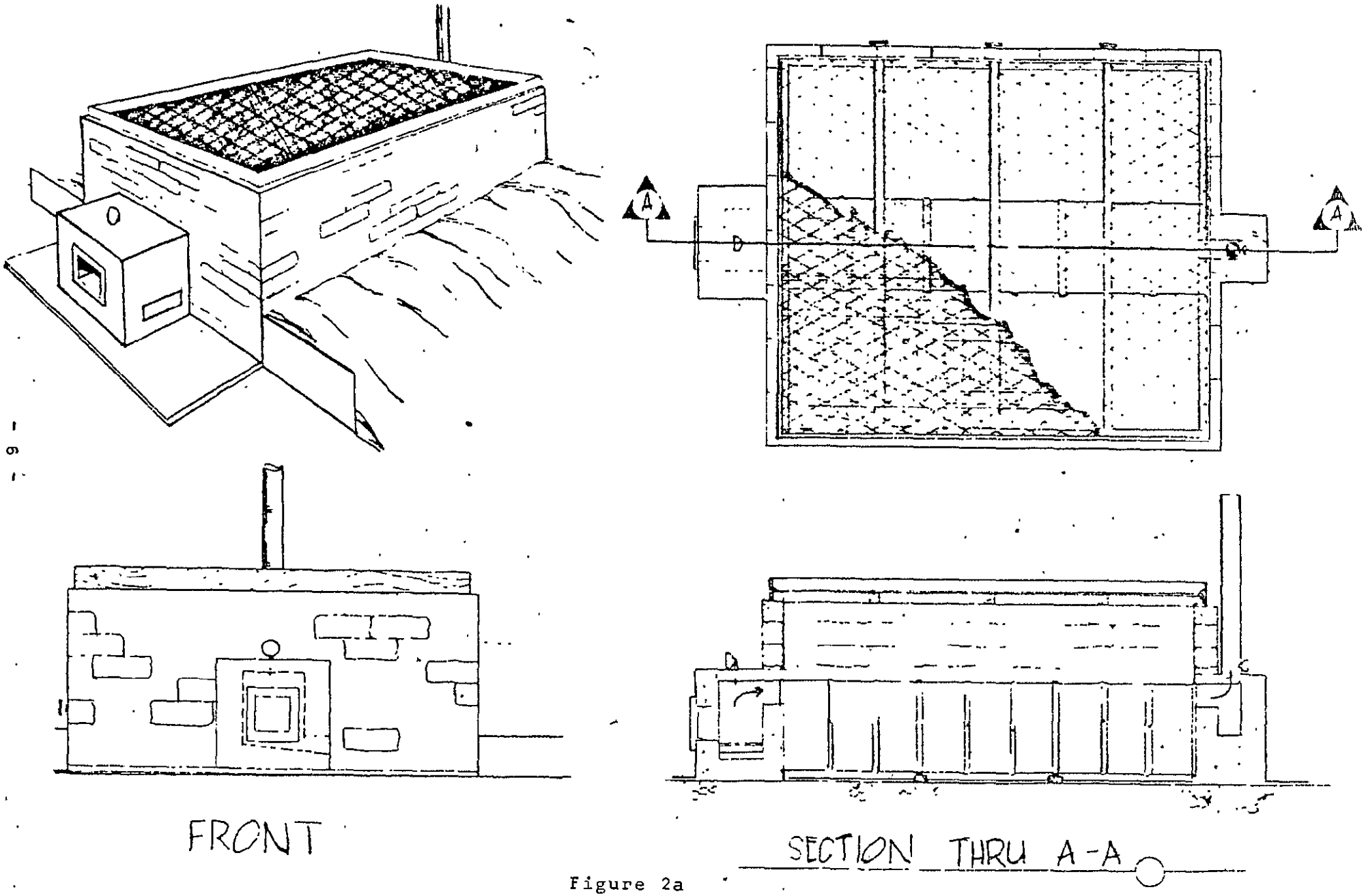

Figure 2a

WOOD FIRED PILOT MODEL

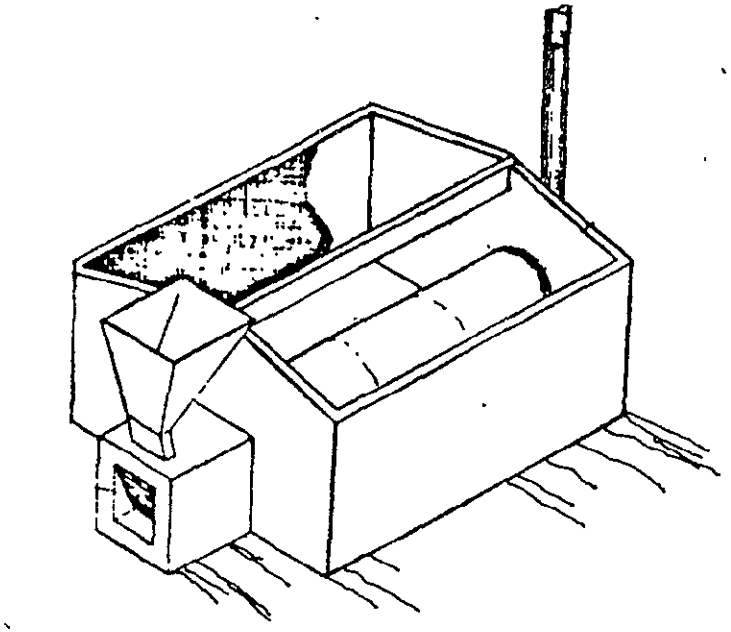

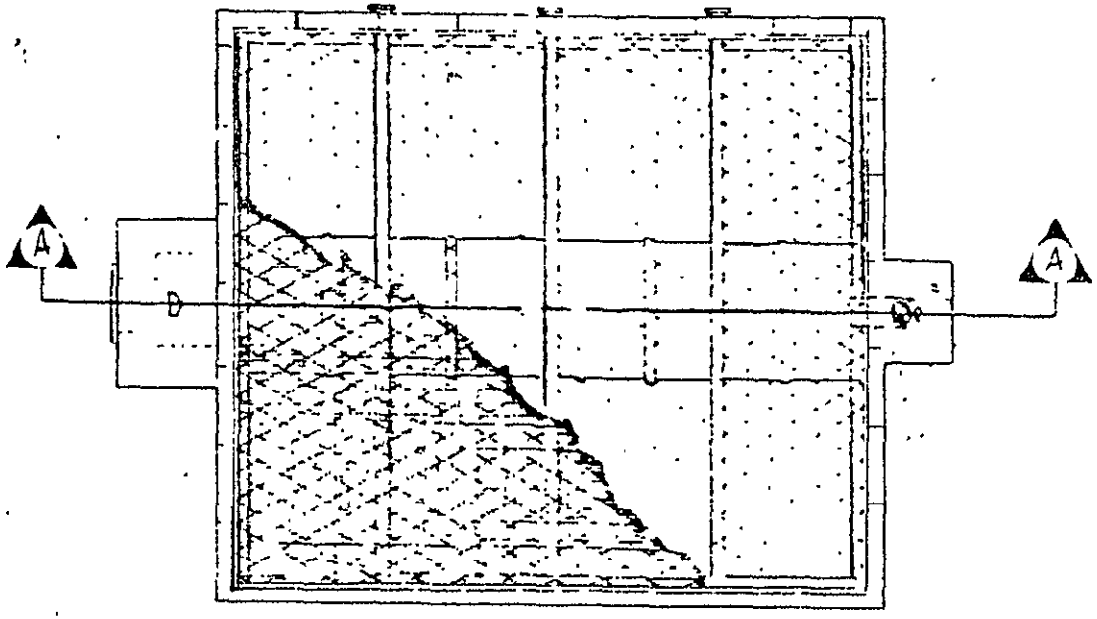

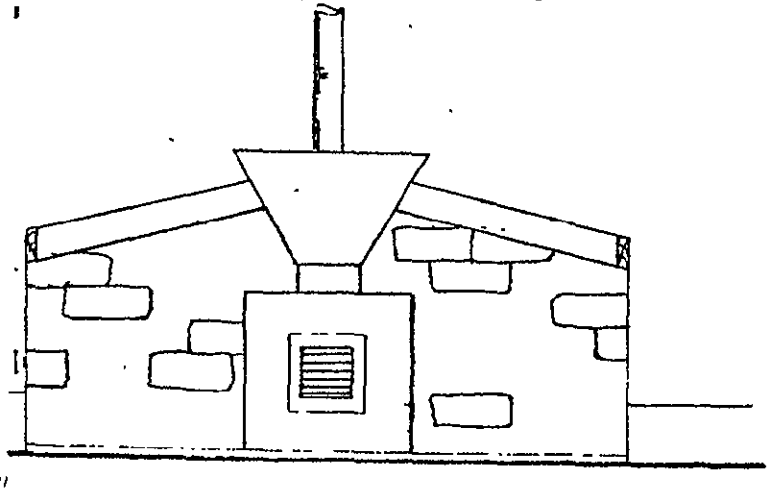

FRONT

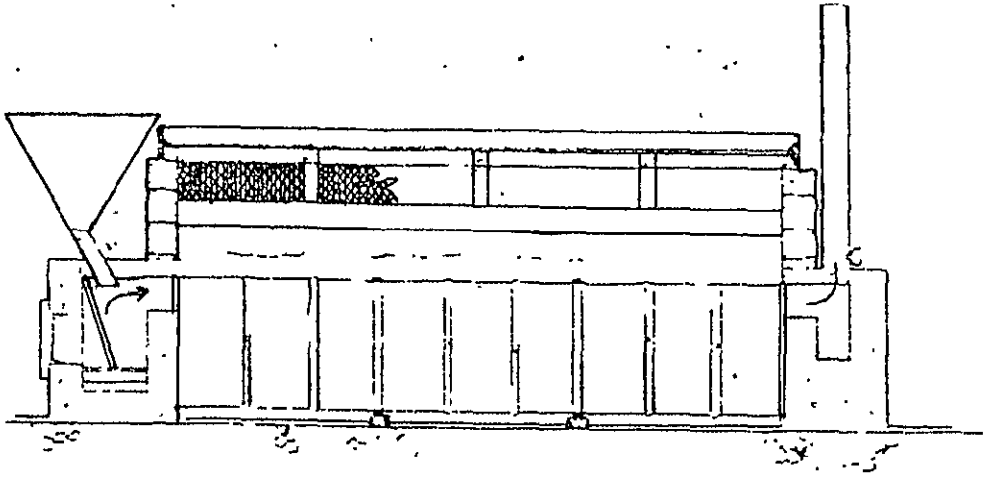

SECTION THRU A-A

Figure 2b

RICE HULLS FIRED PILOT MODEL

Pilot Experiments

The pilot experiments sought to determine the following:

- o Optimum grain depth/dryer loading
- o Optimum drying temperature
- o Drying capacity/drying cycle
- o Fuel requirement/type
- o Quality of dried palay.

1. Optimization of Grain Depth. Unlike in mechanical dryers where blowers force the heated air through the densely-packed grain mass, the pilot dryer relies only on natural draft to move the hot air across the grain mass. Because of this limitation the optimum grain depth has to be determined. (Initial estimates show that the grain depth could go up to 100 cm. or 4 inches.)

2. Optimization of Drying Temperature. Drying temperature affects the drying rate in three ways:

a) Heating the air lowers its relative humidity, thereby increasing its capacity to absorb more moisture.

b) When in contact with the grain, the heated air raises the grain temperature and increases the vapor pressure of the moisture within the grain resulting in the faster movement of the moisture from the grain mass to the surface.

c) Heating hastens the transfer of moisture from the surface of the grain to the heated air.

Theoretically, the higher the drying temperature, the higher the drying rate will be. However, too much heat could cause thermal stress within the grain resulting in grain cracking or poor quality grain.

3. Drying Capacity/Cycle. A continuous 24-hour drying operation was considered in order to maximize the utilization of the heat built up in the dryer.

4. Fuel Requirement. Two fuel types were studied: fuel wood and rice hulls. Fuel consumption per cavan (50 kgs.) of dried material was determined.

5. Palay Quality. The following tests were conducted to determine the quality and acceptability of the dried products:

a) Milling test

- o total milling recovery
- o total head yield

b) Germination test

The samples from each drying run were milled on Engelberg and Satake SB-2B small-scale mills and the final product evaluated using the following formula.

The equation for total milling recovery (TMR) is as follows:

$$TMR = \frac{WHR + WBR}{W_h + W_b + WHR + WBR}$$

where:

WHR = Weight of head rice

WBR = Weight of broken rice

W_h = Weight of husk

W_b = Weight of bran

Percentage head rice recovery (HRR), on the other hand, was determined by the equation:

$$HRR = \frac{WHR}{WHR + WBR}$$

For the germination test, the percentage germination is expressed as:

$$\% \text{ Germination} = \frac{\text{No. of seeds that germinated}}{\text{No. of seeds originally soaked}}$$

In the germination tests, grain samples were taken from each run, counted and soaked overnight in water. The soaked grains were then wrapped in moist padded tissue paper and allowed to germinate for 2 to 3 days. The germinated seeds were counted and the percentage germination determined.

Table 2

DRYING OF PALAY AT VARYING GRAIN DEPTH
(Drying Temperature = 60°C)

Grain Depth (mm)	Dryer Loading Cavans	Moisture Content, %* Initial	Final	Drying Time Hrs.	Drying Rate MC/hr.
a) Rewetted (soaked)					
25	2	23	10	9	1.44
38	3	23	13	8	1.25
51	4	23	13	12	0.83
51	4	23	12	13.5	0.81
64	5	23**	13	23	0.43
b) Newly harvested					
25	2	22	13	8	1.12
31	2.5	22	14	8	1.00
38	3	22	13	9	1.00
51	4	22	13.5	10	0.85
64	5	22	14	17	0.47

* For storage over several months, the moisture content should be around 14% (the equilibrium moisture content.)

** Dripping wet.

Table 3

EFFECT OF GRAIN DEPTH ON THE DRYING RATE
(Drying Temperature = 60°C)

Grain Thickness	Drying Loading Cavans	Drying Time Hours	Effective Drying Capacity, Cavans/hr.
a) Rewetted (soaked)			
25	2	6	.33
38	3	7	.42
51	4	10	.40
64	5	18	.27
b) Newly harvested			
25	2	7	.28
31	2.5	6.5	.38
38	3	6.5	.46
51	4	8.5	.47
64	5	16.0	.31

Figure 4a

PRELIMINARY DRYING EXPERIMENTS ON REWETTED PALAY SAMPLES
AT VARIOUS DRYER LOADINGS
(Drying Temp. = 60°C)

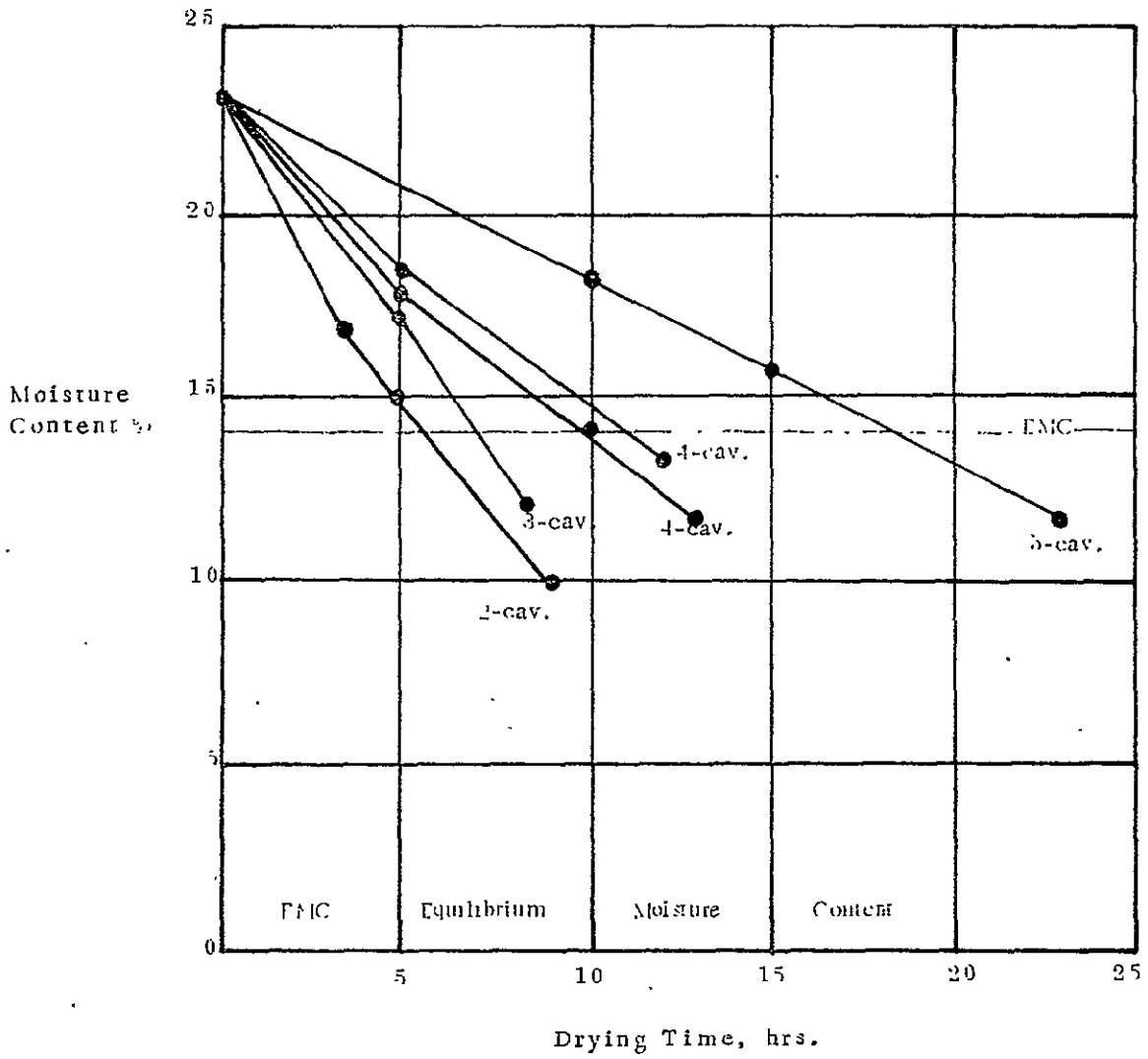

Figure 4b

RATE OF DRYING OF NEWLY HARVESTED PALAY
AT VARIOUS DRYER LOADINGS
(Drying Temp. = 60 °C)

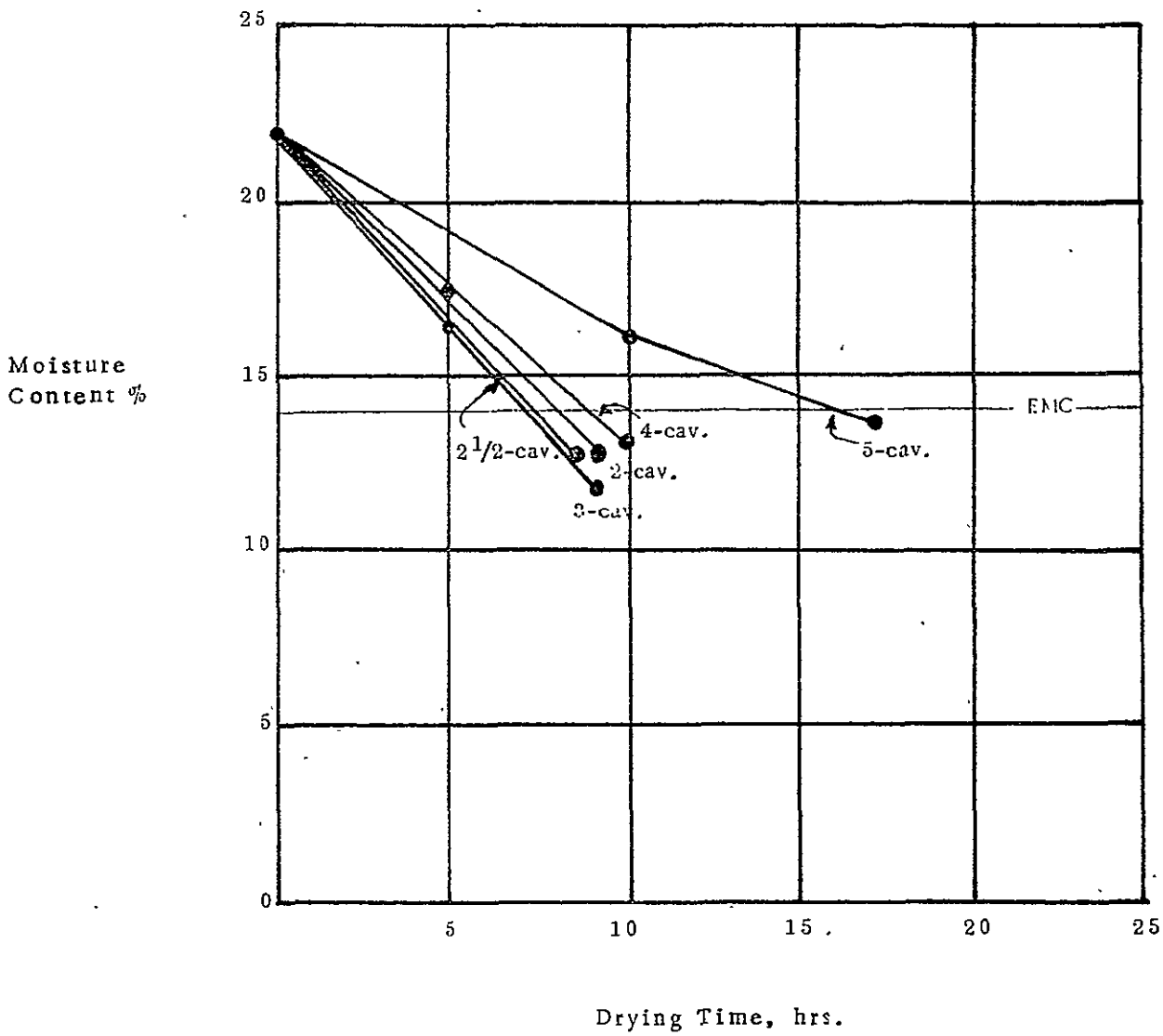

2. Effect of Drying Temperature on the Drying Rate. Pilot runs at varying drying air temperatures are shown in Tables 4 and 5.

The grain depth was kept constant at 50 mm. at a loading of 4 cavans. Results confirm the earlier premis that drying rate is hastened by increasing temperature. The increase in the drying rate, however, is not proportional to the increase in the drying air temperature as a one-hour gain in the drying resulted in a 50% increase in drying air temperature. Also increasing the drying temperature could result in grain damage. (This is discussed further in the next section).

On the aspect of turning up the grains while drying, results showed minimal gains in the drying rate. The effects of grain mixing on milling recovery head rice yields and germination characteristics are discussed in the next section.

3. Fuel Consumption. The fuel consumption for each run was also recorded to determine the drying time and the amount of fuel required at various loads to attain the equilibrium moisture of 14%.

Table 6 gives the fuel consumption data at constant grain depth (50 mm.) and temperature (60°C).

It will be noted that the initial (2-cavan) run actually consumed more fuel than substquent runs at higher loads because of the normally higher fuel requirement during start-up.

4. Palay Quality. To determine optimum conditions for milling and germination of the dried palay, samples were subjected to milling and germination tests.

a) Milling Test. Samples from each drying run were sent to the College of Agricultural Engineering, University of the Philippines at Los Baños.

Samples at 10 kgs. each were milled in two types of mills: the Engelberg mill and the Satake SB-2B small-scale rice milling machine. Before testing, the dried rice sample was cleaned in a Strecker and Scharader double-action pre-cleaner.

Table 6

FUEL (FIREWOOD) CONSUMPTION
(Newly Harvested Rice)

	Total Fuel Used Kgs.	Total Drying Time hr.	Fuel Rate kgs./hr.	Required Drying hrs.	Fuel Required kgs.
I. At constant temperature (60°C)					
a) 2 cavans	44.0 kgs.	8	5.5	7.0	38.5
b) 2-1/2 cavans	39.0 kgs.	8	4.87	6.5	31.7
c) 3 cavans	43.0 kgs.	9	4.77	6.5	31.0
d) 4 cavans	56.0 kgs.	10	5.6	8.5	47.6
e) 5 cavans	75.5 kgs.	17	4.44	13.0	57.7
II. At constant grain depth (50 mm.)					
a) 55°C drying temperature	54.0 kgs.	10	5.4	10	54.0
b) 60°C drying temperature	57.0 kgs.	12	4.75	10	47.5
c) 65°C drying temperature	55.0 kgs.	11	5.0	9	45.0
d) 70°C drying temperature	59.0 kgs.	10	5.9	9	53.1
e) 75°C drying temperature	63.0 kgs.	9	7.0	8.5	57.1

Figure 7

GRAIN DRYING TIME AT VARYING
DRYING TEMPERATURE

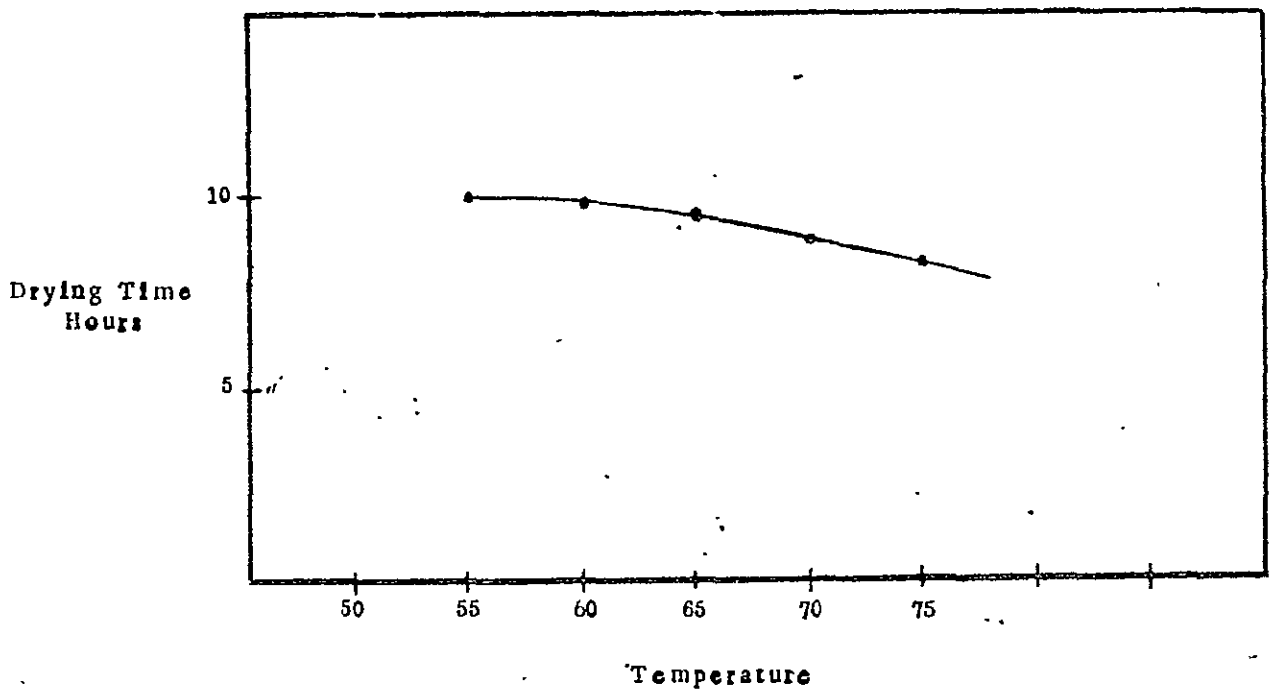

Head Rice Recovery reflects the extent of internal checking of rice grain during drying and storage. Internal checking can be caused by thermal or moisture stresses. This thermal stress during the drying process made the rice crack resulting in fissures and broken rice when milled. Head rice recovery is determined by the ratio of, undamaged rice to the total rice yield after milling.

The head rice yield analysis at all temperature levels (see Table 9) shows the advantages of turning up the grains during drying. With the rubber roller type mill, samples turned up during drying fall under Philippine grades 2 and 3 categories while unturned samples do not even make it to Grade 3. Drying at 75°C however gave high head rice yield for both turned and unturned samples.

It appears that in turning up the grains during drying, the total milling recovery is maintained, but the head rice yield is significantly increased.

Table 9

HEAD RICE YIELD OF MILLED RICE

Drying Temperature °C	Type of Mill			
	Rubber Roll		Kiskisan	
	Mixed	Not Mi d	Mixed	Not Mixed
55	52.5%	34.2%	59%	40%
60	64.9%	48%	58.3%	50%
65	64.4%	48%	40%	55%
70	70%	41.7%	69%	50%
75	63&	77.5%	--	60%

b) Germination Test. This test was conducted in the samples of the last five of the drying runs (i.e., at five different drying temperature settings). The results determined ideal drying temperature for grains to be used as seedlings.

The results of the germination test are tabulated in Table 10.

At 55oC, the turned-up dried sample attained the highest germination rate of 88%; the unturned sample had a lower 74% germination rate.

At 60°C, 82% germination was attained from the turned up dried sample against 74% from the unturned sample.

Comparing all the results of the germination tests, it can be seen that the ideal drying temperature for seedling purposes is 55°C to 60°C.

Table 10

RESULTS OF THE GERMINATION TESTS

Temperature °C	% Germination	
	Mixed	Not Mixed
55	88	74
60	82	74
65	62	42
70	72	66
75	65	62

C. Development of the Final Design

Even as test runs on the pilot model were being conducted, EDF engineers held dialogues with farmers and potential cooperators. Majority indicated that for the dryer to become relevant, it must be able to dry more than 5 cavans of palay at a time. The farmers agreed that a capacity of 15 to 20 cavans would be applicable to their needs.

Consequently, 15- and 20-cavan capacity dryers were designed for field testing using design parameters determined during the pilot runs. These designs further evolved as innovations based on performance of early field models were built into the final designs.

All in all, three dryer designs were developed:

- 5- cavan capacity
- 15-cavan capacity
- 20-cavan capacity

The 5-cavan dryer is basically the same as the second pilot model. It is rice-hull fed and utilizes a sloping drying tray. The additional feature is the ceramic lining of the furnace and chimney for better thermal protection.

In the larger units (15 - and 20-cavan capacity models) the furnace was located at the middle of the dryer with the flue gases entering the center of the heater tubes (empty oil drums) via a flue gas manifold, and exiting at two smoke stacks at opposite ends. This arrangement more than offsets the cost of an additional smoke stack through benefits gained from more even dryer heating.

The temperature near the furnace was observed to be higher than at the chimney end; this difference is likely to be more pronounced in the larger units. Also, the manifold could support the main beam where the drying trays rest.

The three dryer prototypes are shown in Figure 8 and sectional details in Figures 9 and 10. Table 11 gives the bill of materials and estimated costs of the units.

Figure 8

COMPARATIVE SIZES AND DESIGNS OF FIELD MODELS

• 5 CAVAN CAPACITY

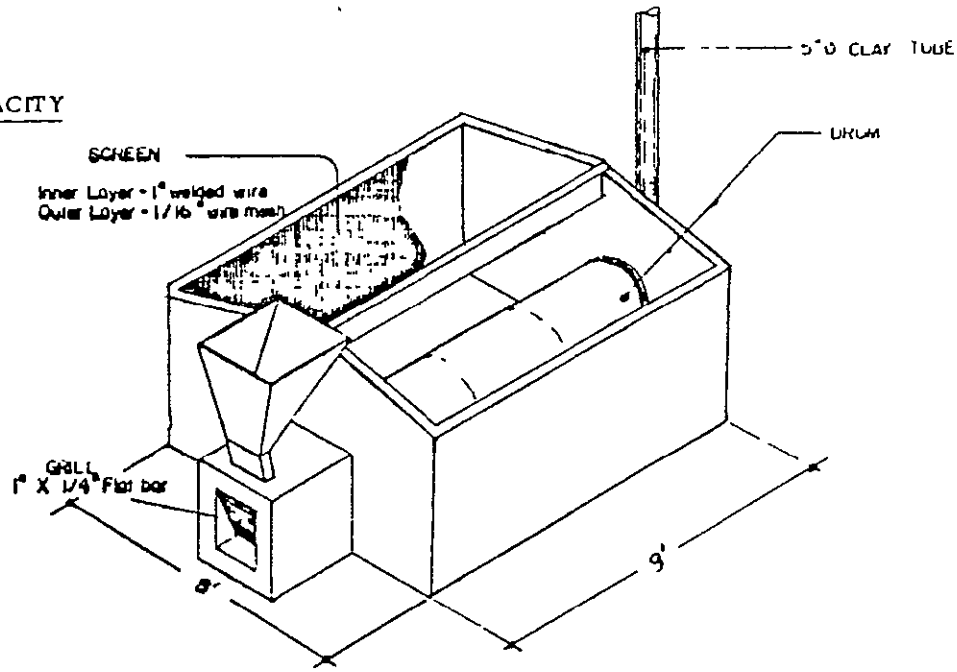

•15 CAVAN CAPACITY

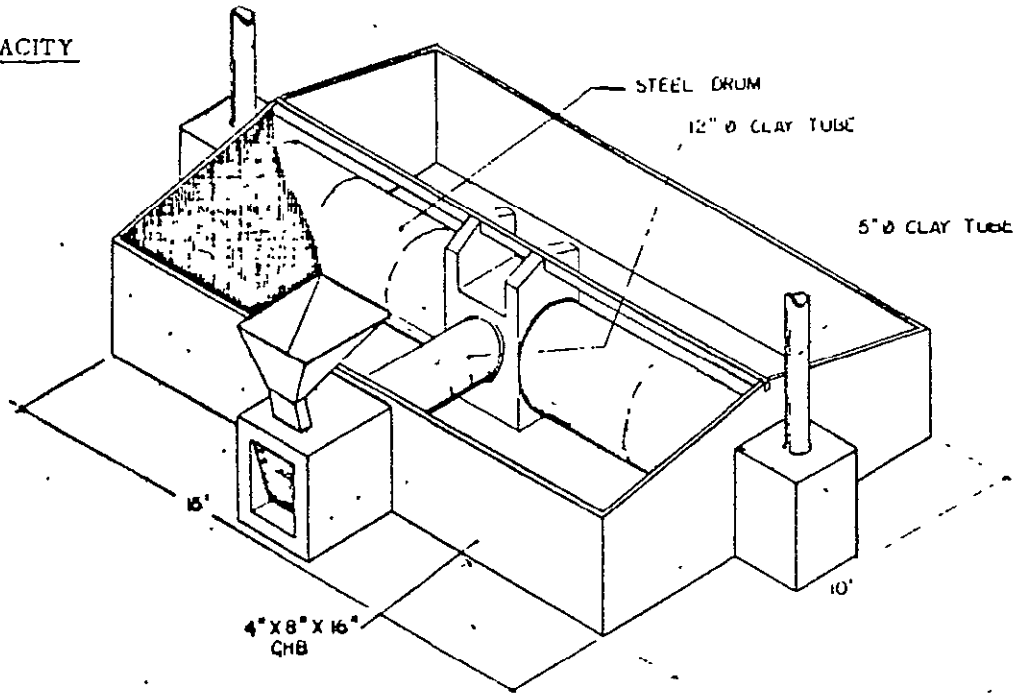

•20 CAVAN CAPACITY

Figure 9

SECTIONAL VIEW OF THE FIELD MODEL UNITS

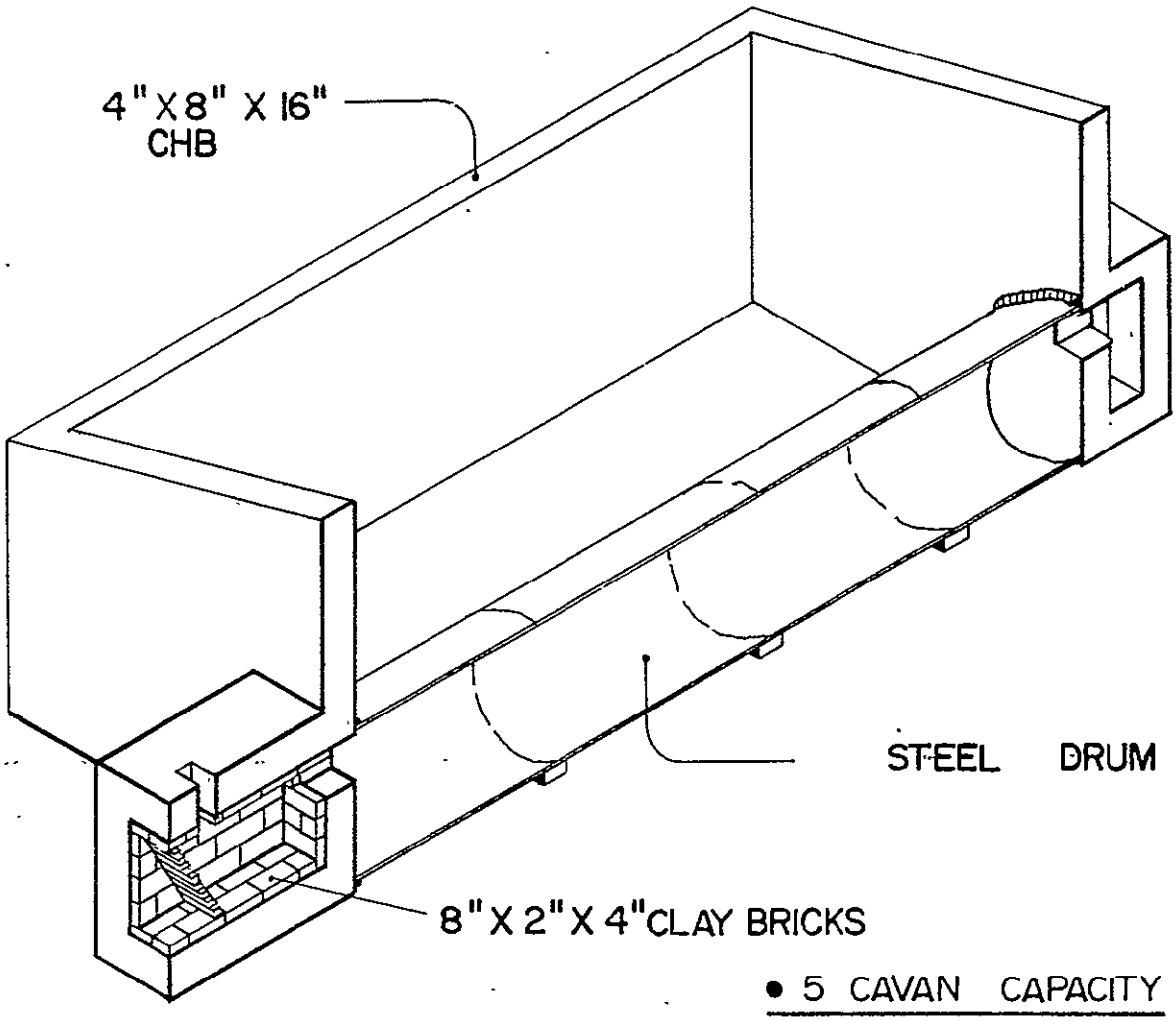

Figure 10

SECTIONAL VIEW OF THE FIELD MODEL UNITS

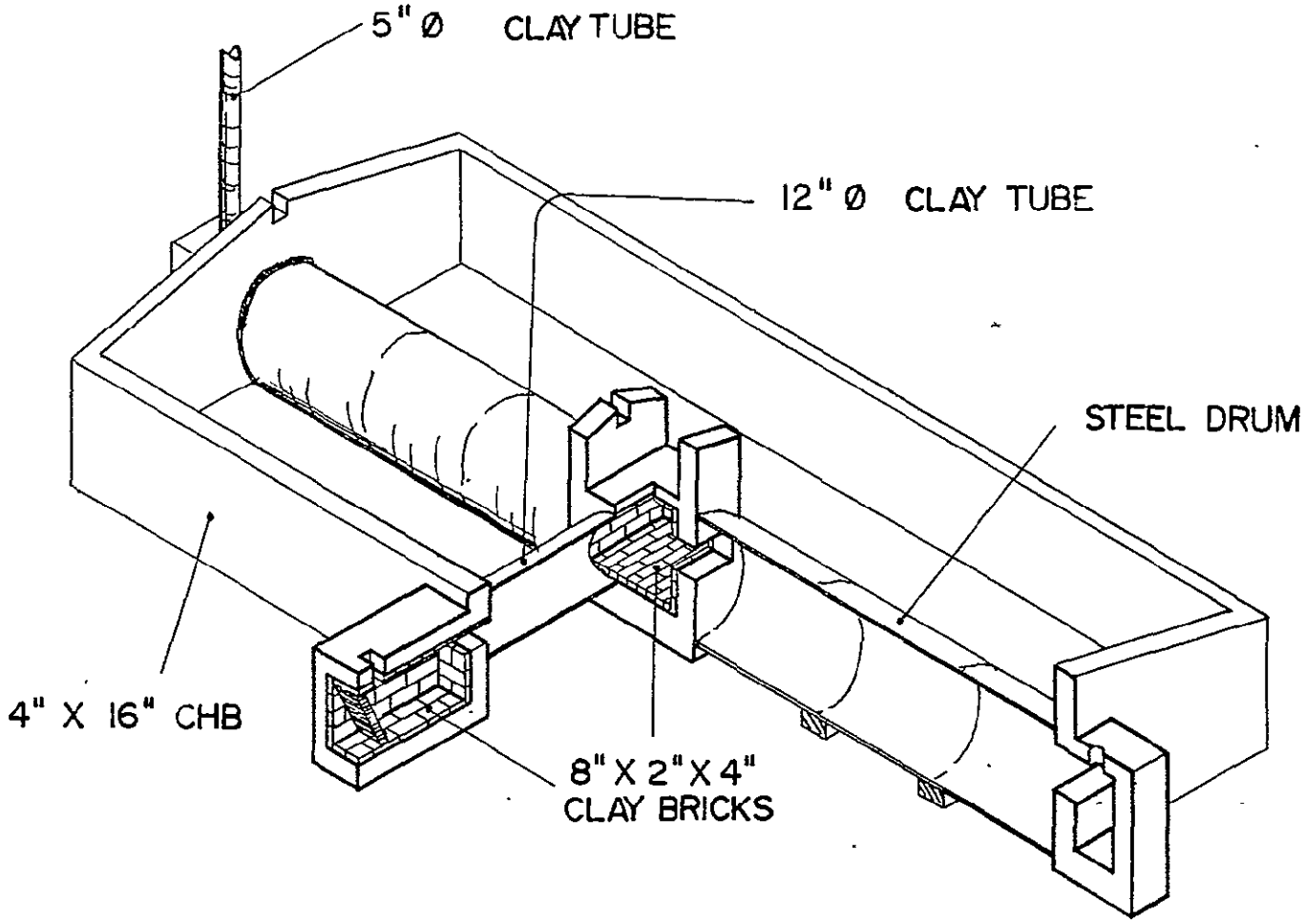

• 20 and 15 CAVAN CAPACITY

Table 11

ESTIMATED COST OF DRYERS
(In Pesos)

	Average Price	5-Cavan		15-Cavan		20-Cavan	
		Quantity	Cost	Quantity	Cost	Quantity	Cost
A. Materials							
1. Concrete Hollow Blocks	2.00/pc.	150	300.00	300	600.00	350	700.00
2. Cement	50.00/bag	10	500.00	17	850.00	20	1,000.00
3. Sand	60.00/cu.m.	1	60.00	2	120.00	2	120.00
4. Clay bricks	0.80/pc.	50	40.00	80	64.00	80	64.00
5. Clay pipe 5"Ø	6.00/pc.	8	48.00	16	96.00	16	96.00
6. Clay Pipe 12"Ø	8.00/pc.	--	--	4	32.00	4	32.00
7. Empty Oil Drums	110.00/pc.	3	330.00	4	440.00	6	660.00
8. Reinforcing bars #3	22.00/pc.	8	176.00	12	264.00	18	396.00
9. Flat Steel Bars 1" x 1/4"	80.00/pc.	2	160.00	2	160.00	2	160.00
10. GI Sheet #31	84.00/pc.	2	168.00	2	168.00	2	168.00
11. Wire Mesh, 1"	24.00/meter	8	192.00	16	384.00	22	528.00
12. Wire Screen	42.00/meter	8	336.00	16	672.00	22	924.00
13. Lumber							
2" x 6" x 8"	6.50/bd.ft.	10	65.00	16	104.00	24	156.00
2" x 3" x 12"	6.50/bd.ft.	45	292.50	76	494.00	114	741.00
1" x 4" x 12"	6.50/bd.ft.	14	91.00	19	123.50	24	156.00
1/2" x 2" x 12"	1.00/lin. ft.	80	80.00	138	138.00	204	204.00
14. Miscellaneous			30.00		50.00		50.00
Sub-Total			2,868.50		4,759.50		6,155.00
B. Labor	50/man-day	10	500.00	12	600.00	15	750.00
TOTAL			3,368.50		5,359.50		6,905.00

III. FIELD EVALUATION OF THE DRYER SYSTEM

With the completion of development work and pilot studies, the dryer systems were field tested in selected sites in Central Luzon. The tests coincided with the second and third harvests of the region during the period May to November.

A. Objectives of the Field Evaluation

Field evaluation of the dryer system sought to determine the following:

- Appropriateness of the system in the rice-producing areas in terms of availability of construction and fuel materials
- Availability of skills in the rural areas and training needs for the construction and operation of the dryer
- Relevant factors affecting the acceptability of the technology among small farmers
- Economic advantages gained by the farmers from the use of the technology.

B. Field Evaluation Approach

Basically, the approach was to set up several units in the field and determine its appropriateness and acceptability to the farmers.

Field evaluation was conducted as follows:

1. Careful selection of the field evaluation sites considering number of croppings per year and the predominance of wet climate during the harvest season
2. Selection of cooperators
3. Construction and operation of the system
4. Evaluation of the appropriateness, acceptability and benefit of the dryer system.

C. Field Evaluation Proper

Site Selection

1. Criteria. Even as experimental and pilot studies were in progress, field evaluation, particularly selection of evaluation and demonstration sites, was already started. The following criteria were used in selecting specific areas and farms for the project:

   - The area is planted with high-yielding paddy rice
   - Multiple cropping (at least 2 crops per year) is practiced
   - The climate in the area is predominantly wet, particularly during the harvest season
   - Individual farmers and/or activities farmers' cooperative associations were willing to participate in the project
   - Agricultural waste fuel materials must be readily available in the area.

2. Selected sites. The provinces of Tarlac and Nueva Ecija were pre-selected because aside from being in the rice basket, they appeared to meet all the criteria.

   Community workers were fielded to identify barangays which fell within the criteria and to introduce the low-cost grain dryer to officers or farmers' organizations and individual farmers.

   Thirteen (13) sites were identified, but only 10 successfully constructed prototype models for the following reasons:

   - Failure of the irrigation system to supply water, preventing the planned second cropping in two sites
   - Defaults of farmer cooperators in another site.

The final field evaluation sites were as follows:

Barangay	Municipality	Province
San Bartolome	Mayantoc	Tarlac
Talimundoc-San Miguel	Concepcion	Tarlac
San Manuel	Tarlac	Tarlac
Sawat	Camiling	Tarlac
Banbing	Guimba	Nueva Ecija
San Roque	Guimba	Nueva Ecija
San Isidro	Zaragoza	Nueva Ecija
Concepcion	Zaragoza	Nueva Ecija
Lourdes	Cabanatuan City	Nueva Ecija
Mayapyap	Cabanatuan City	Nueva Ecija

3. Location and distance of other sites. The 10 sites are located in 7 municipalities, 4 in Tarlac and 6 in Nueva Ecija. From the map, one can see that these are strategically located in Central Luzon.

If Tarlac, Tarlac were to be made the central point of reckoning, the estimated distances and direction of the other municipalities are as follows:

Municipality	Approximate Distance	Direction	Route
Mayantoc, Tarlac	35 km.	Northwest	via Romulo highway
Concepcion, Tarlac	25 km.	Southwest	via McArthur highway and provincial road
Zaragoza, Nueva Ecija	20 km.	East	Tarlac-Sta. Rosa highway
Guimba, Nueva Ecija	35 km.	Northwest	Via Gerona
Camiling, Tarlac	45 km.	Northwest	Romulo Highway
Cabanatuan Nueva Ecija	40 km.	East	Tarlac-Sta. Rosa Highway

The dryers were installed at the backyard or near the homes of cooperators and not in their farms. (Farmers' homes are sometimes some kilometers away from their farms). The reasons for these are:

- Harvested palay is usually stored in the farmers' houses.

Figure 11

SELECTED DEMONSTRATION SITES

REGION IV-CENTRAL LUZON

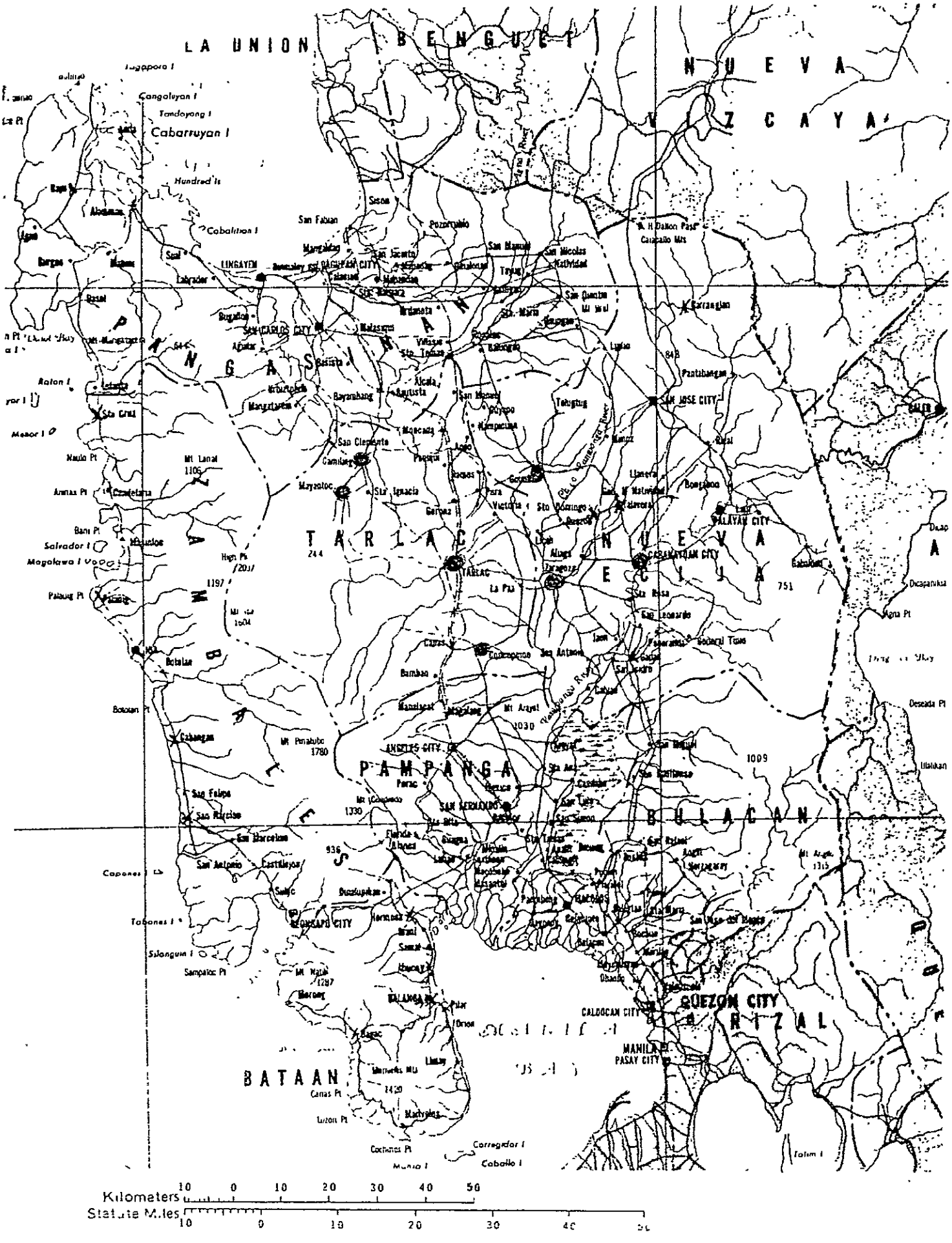

- The dryer may be tended by any member of the family even while attending to some other household chores.

4. Distance from fuel source. The distances of the demonstration sites from the nearest kono rice mill which produces rice hulls (for dryer fuel) are as follows:

Barangay	Kono Rice Mill	Approximate Distance (km.)
San Bartolome	Mayantoc town proper	4.0
Talimundoc-San Miguel	same barangay	0.5
San Manuel	same barangay	0.5
Concepcion	neighboring barangay	1.0
San Isidro	same barangay	0.1
San Roque	Guimba town proper	2.0
Bantay	Guimba town proper	3.0
Lourdes	neighboring barangay	1.5
Mayapyap	same barangay	1.0
Sawat	Camiling town proper	2.0

Selection of Cooperators

Interviews and group conferences were conducted in field test sites to discuss palay drying problems with the farmers as well as identify potential cooperators for the project. Individuals and farmers' organizations were selected and follow-up meetings held with them to firm up the commitments and the roles of EDF and the cooperators in the tests.

1. Criteria

Cooperators were selected on the assumption that the use of the existing leadership structure in the community could facilitate the introduction, promotion and diffusion of the farm technology. Thus the following guidelines for election were used:

- Leadership status (He is an officer of a farmers' organization or a recognized initiator in adapting progressive farming methods)

- Willingness to test the low-cost grain dryer

Construction and Operation of the Field Units

1. Agreement Between EDF and Cooperators

A memorandum of agreement between the EDF and cooperators formalized the respective roles of each party in the project. The working arrangements were as follows:

EDF
- Provides construction materials for the dryer
- Provides dryer designs and supervise construction of the dryer
- Supervises start-up and debugging of the dryers
- Trains operators

Cooperator
- Provides a site and shed for the dryer within his property
- Provides labor and manpower for the construction and operation of the dryer
- Provides "palay" to be dried from his own harvest or solicited from other farmer during the test runs
- Performs the required test runs
- Shares the dryer with other farmers interested in testing the dryer
- Assists other farmers in the construction and operation of their own dryers

2. Design and Construction of the Units

After initial consultations with cooperators on their drying needs, it was clear that the field models would have varying capacities depending on the requirements of the users. This called for scaling up the pilot model up to a capacity of 20 cavans. All in all, the capacity mix of the field models was as follows:

Capacity in Cavans	No. of Field Models
5	1
15	4
20	5

Table 12

SIZES OF DIFFERENT UNITS IN THE SITES

		Field Model Dryer Capacity
1.	San Bartolome, Mayantoc, Tarlac	20 cavans
2.	San Manuel, Tarlac, Tarlac	15 cavans
3.	Concepcion, Zaragoza, Nueva Ecija	5 cavans
4.	San Isidro, Zaragoza, Nueva Ecija	20 cavans
5.	Talimundoc-San Miguel Concepcion, Tarlac	15 cavans
6.	Bantug, Guimba, Nueva Ecija	20 cavans
7.	San Roque, Guimba, Nueva Ecija	20 cavans
8.	Mayapyap, Cabanatuan City, Nueva Ecija	20 cavans
9.	Lourdes, Cabanatuan City, Nueva Ecija	15 cavans
10.	Sawat, Camiling, Tarlac	15 cavans

3. Construction Costs and Requirements

A list of building materials for the dryer has been given in the preceding chapter. All except ceramic bricks and pipes were available in the town's hardware stores. Ceramic materials were obtained from local potteries.

Skills required for the construction of the dryer were always readily available in the barangay. Total labor required to build dryers in the 3 sites are as follows:

	Capacity (Cavans)			
	5	15	20	
Mason	4	5	5	man-days
Carpenter	3	4	5	man-days
Miscellaneous	3	3	5	man-days
TOTAL	10	12	15	

As mentioned earlier, the increase in prices when the field models were being constructed resulted in the final cost exceeding the budget. However, it would still be lower than the target cost of $500 or ₱9,000. This means that, cost wise, the project still meets its original objectives.

Table 14

PERFORMANCE OF THE FIELD MODELS

Dryer Capacity	Initial Moisture Content of Palay % MC	Final Moisture Content of Palay of MC	Drying Hours	Dryer Temp. °C	Fuel Consumption (First Batch) kg.
5	22-25%	14	8	75	33
15	22-25%	16	10	70	142
20	22-25%	16	11	70	215

Evaluation of Appropriateness

The following is an evaluation of the dryer's appropriateness and acceptability in the rural areas based on the results of field tests and feedback from the cooperators. Appropriateness is evaluated in terms of applicability or relevance to the needs of the farmers, local capability to build the dryer, availability of materials and affordability; and economic advantage for the farmers.

1. Relevance of the Drier to Farmer's Needs

The field evaluation confirmed the basic assumption that farmers suffer loses due to unwanted germination of rice harvest or when they are forced to sell their wet palay at a much lower prices to avoid greater losses.

Ordinarily, the farmers dry their palay harvest using the traditional sundrying method by which the grains are spread on concrete pavement or drying beds. This method however has several drawbacks:

- It does not allow drying during the rainy season.
- Palay grains laid on highways are often run over by vehicles, thus lowering their milling quality
- The practice poses a traffic hazards.

Ceramic bricks and pipes can be produced by local potteries. For towns which do not have a ceramic or pottery industry, the bricks may be ordered through pot dealers in the town's public market. Moreover, farmers can be trained to make their own ceramic bricks using available materials.

Fuel for the dryer is always readily available. Rice hulls may be hauled by the farmer from rice mills which exist in almost every rice-producing town in the country. Other available agricultural waste materials such rice stalk or wood may be used with little alteration in the dryer's furnace.

IV. ECONOMIC ASSESSMENT

Following is an assessment of the economic benefits and costs to the farmers of the use of the dryer.

A. Costs

1. Investment Cost

The investment requirement of a farmer for a drying facility (dryer plus shed) ranges from ₱5,000 for the 5-cavan dryer to ₱10,500 for the 20-cavan dryer (Table 15).

While some progressive farmers can afford to put up a dryer, many small farmers are not able to put up the front-end cash to build the dryer even if it proves profitable. Two options are considered to overcome this problem:

- Obtain a loan from existing financial institutions
- Organize or use existing cooperatives to build the dryer by equity.

With the present scarcity of funds and high interest rates, obtaining loans from banks may not be an ideal solution. However, some banks may be willing to provide loans to a group of, say, at least 5 farmers. (This arrangement was made between a bank and a cooperative in one of the barangays covered by the project).

Equity contribution may be the last resort in putting up the needed funds to build the dryer. An equity contribution of ₱1,000 to 2,000 from each farmer is considered reasonable and affordable by the farmers.

Ownership patterns would be as follows:

- 5-cavan dryer - for farmers cultivating at least 3 hectares of land or jointly owned by 2 or 3 small farmers with a total harvest of 200 cavans
- 15-cavan dryer - for farmers cultivating 5-10 hectares of land or jointly owned about 5 small farmers with a total harvest of 600 cavans
- 20-cavan dryer - jointly owned by a Samahang Nayon (SN). An SN, however, might need more than 1 unit each unit handling at least 1000 cavans per season.

Table 15

COST OF DRYING FACILITY

Dryer Capacity	Dryer	Shed	Total
5-cavan	₱3,500	₱1,500	₱ 5,000
15-cavan	5,500	3,000	8,500
20-cavan	7,000	3,000	10,500

2. Operating Cost

Operating the dryer hardly requires any cost because:

-- rice hulls are readily available for free

-- the farmer or any member of his family can by themselves attend to the operation of the dryer.

3. Annual Costs

With labor cost in operating the dryer practically nil, the annual cost consists only of depreciation and maintenance costs. Table 16 shows the estimated annual costs of each type of driers. Depreciation is estimated based on 4 years life and maintenance cost of 10% of the initial cost of the dryers.

Table 16

ANNUAL COST OF OPERATING THE DRYER

Dryer Capacity	Depreciation 4 years (₱)	Maintenance (%)	Annual Costs
5-cavan	750	500	1,750
15-cavan	2,125	850	2,975
20-cavan	2,625	1,050	3,675

2. Savings

Following the earlier assumption on ownership and drying load for each type of dryer, annual earnings that can be derived from each dryer are as follows:

Table 18

ESTIMATED SAVINGS FROM EACH DRYER

Dryer Capacity	Volume (cavan)	Additional Revenue (₱)	Annual Cost (₱)	Annual Earnings (₱)
5-cavan	200	7,040	1,750	5,290
15-cavan	600	21,120	2,975	18,145
20-cavan	1,000	35,200	3,675	31,525

These savings are based on 20 to 25 days operation* of the dryers. Since the rainy season covers at least two months each year, the estimated utilization is conservative. There is a high potential for the dryers to earn more through being renting out after the owners' use.

C. Payback

From the preceding analysis, the earnings of the dryer in one year will exceed the initial investments. Thus initial costs can be recovered within the same year.

In terms of the number of cavans of palay to be dried, payback volumes are 142, 241 and 298 cavans for the 5-, 15- and 20-cavan dryers, respectively. Theoretically, these can be achieved in 13, 8 and 8 days, respectively.

Table 19

PAYBACK VOLUME

Dryer Capacity Dryer Capacity	Payback Volume (cavan)	No. of days of Operation
5-cavan	142	13
15-cavan	241	8
20-cavan	298	8

* The dryer is assumed to dry two batches of palay per day, thus doubling its capacity.

V. TECHNOLOGY DISSEMINATION AND PROMOTION

The promotional aspect of the study primarily aims to disseminate the grain dryer technology to the farmers. The approach consists of two methods:

-- Demonstration

-- Creation of awareness.

A. Demonstration

Demonstrations aim to present the features and performance of the dryer directly to farmer users as well as to people who could help in the promotion of the dryer in other regions of the country.

The 10 field evaluation units were used as demonstration models after building in improvements suggested by the test runs. Demonstration runs were made in two levels:

-- barangay level

-- town level.

At the barangay level, the cooperators were asked to encourage other farmers from within the barangay to use the dryer. This shall be done before the demonstration stage proper of the project has elapsed, to ensure that interested farmer would always have the opportunity to see for themselves the efficacy of the dryer system by actually using it. At the same time, other farmers were asked to observe the operation of the dryer during these runs. This way, they would be able to familiarize themselves with the operation and features of the dryer and likewise be personally convinced of its effectiveness. The positive testimony of the farmer would help spread knowledge of the dryer and encourage other farms to use it.

This approach was proven effective and has a strong impact on the farmers as they have a direct hand in operating the dryer. Coverage, however, is limited to within the barangay. Initial feedback indicates that farmer who have tried the dryer were convinced of the dryers' effectiveness and showed interest in putting up new units after observation of the dryer's long term performance. Many observers were likewise convinced and were willing to try the dryer in their next harvest.

The demonstration run formal consisted mainly of the following:

-- actual drying run

-- explanation on the concept, features and operation of the dryer

-- open forum and audience inspection of the dryer.

Firing of the dryer loaded with newly harvested palay was usually done earlier than the actual demonstration run to allow heat to build up and start the drying process. A control sample is set aside for comparison of moisture content during the demonstration.

During the demonstration proper, the EDF engineers explained to the audience the following:

- o An overview of the USAID-EDF project with emphasis on the objectives of the project
- o Principles involved in the operation of the dryer
- o Operating parameters of the dryer
- o Economics of the dryer.

After the brief explanation on the features of the dryer, open forums were conducted to answer questions the audience might have on the dryer. This was immediately followed by an inspection of the dryer by the audience.

To supplement the discussions, brochures were distributed among the participants. Extra copies were given for distribution among other farmers. Attendance of these demonstration runs is as follows:

1.	Sawat, Camiling, Tarlac:	15
	Ministry of Agriculture Local Officials and Technicians	4
	Barangay and Samahang Nayon Officials	5
	Farmers	6

2.	Guimba, Nueva Ecija:	13
	Local government officials including mayor	4
	Barangay officials	3
	Farmers and farmers organization representatives	6
3.	Lourdes, Cabanatuan, Nueva Ecija:	15
	Farmer organizations' officials	7
	Farmers	8
4.	San Manuel, Tarlac*	5
	Farmers organizations' officials	5
5.	Mayapyap, Cabanatuan, Nueva Ecija:	39
	Local government officials	2
	Bank representatives	2
	Media representatives	3
	Barangay officials	4
	Samahang Nayon officials	3
	Farmer	25

In all cases, the participants signified their acceptance of the dryer and many farmers showed their enthusiasm in building their units. Among the common feedback from the participants are:

- The dryer suits the farmers needs.
- It is more economical compared to existing dryer which use blowers.
- The farmers can try out the dryer on other agricultural products like corn, mongo bean, melon seeds, peanuts.
- The heating system has other applications, e.g., heating of small poultry farms.

* There was an inclement weather when the demonstration conducted.

B. Creation of Awareness

A promotional drive to create awareness among target users not reached by the project was conducted concurrent with the demonstration runs. Three approaches were used:

- o Word of mouth through farmers familiar with the dryer
- o Mass media
- o Promotion to institutions dealing with farmers.

To disseminate knowledge of the dryer by word of mouth, farmers introduced to the dryer, specially those who attended demonstrations, were encouraged to spread the knowledge of the dryer to other farmers who are not yet aware of it. However, this method depends largely on the contacts made by the farmers with other farmers, and considering the vastness of the target users, this approach is very limited.

For wider coverage, mass media and government institutions were tapped.

In promoting the dryer through mass media, two instruments were used:

- o Printed brochures, and
- o Technical and national publications

Brochures (See Appendix 1) explaining the design, operation, costs and benefits of the dryer were distributed to farmer cooperators and demo-participants for redistribution to other target users. Brochures were also mailed to officers of government and private institutions directly involved in promoting the welfare of the agricultural industry. Around 600 copies were printed and, so far, more than 500 have already been distributed.

In tapping existing mass circulation publications, the EDF made press releases to national dailies. Representatives of the publications were invited to demonstration runs for them to observe the dryer in actual operation. Since the last demonstration run, three articles promoting the dryer have appread on national dailies (See Appendix 2).

Existing institutions dealing with the development of the agricultural industry were also tapped. In particular, these are the Ministry of Agriculture and its agencies, government and private cooperative banks and the National Food Authority. Research institutions concerned with the development of agricultural and energy-related equipment (e.g., the National Science and Technology Authority and the Energy Research and Development Center) were also called on.

Promotion among institutions was done mainly by inviting officers of agencies within the project area (Tarlac and Nueva Ecija) to demonstration runs and by sending brochures to their offices in other provinces and regions.

A cross section of the agencies reached shows that all three concerns-agricultural, financing, marketing and technical development- have been covered by the promotional drive. Table 20 lists the institutions covered by the drive while Figure 12 shows how each institution influences the farmer.

C. Assessment of the Initial Results of the Promotional Drive

One month after it started, the drive to create awareness in regions outside the project area through linkages with institutions yielded positive feedback. The MFA and the NSTA indicated their willingness to disseminate the technology distributing brochures to the farmers. The Region V office of the MFA and a cooperative rural bank in Lanao del Norte are requesting for a demonstration of the dryer and assistance in building units in their respective areas. (See Appendix 3 for feedback letter).

Based on these and the results of the demonstration runs, it appears that although technology dissemination through literature and word of mouth are effective in creating user interest, these may not be enough to convince the farmers of their effectiveness to want to risk investing on it. Moreover, they are not familiar with technical illustrations and plans and thus are not able to grasp operational principles or build their own units by merely referring to technical literature.

Actual demonstration, on the other hand, can convince the target users of the dryer's efficacy as shown in the demonstration runs. Based on these and the feedback from the promotional drive, demonstration is a "must" in disseminating the dryer technology to farmers.

Table 20

INSTITUTIONS REACHED BY THE PROMOTIONAL DRIVE

o Cooperative Rural Banks (CRB)	Private entity duly organized by Samahang Nayons which serves as financing area to farmers	26 CRB Managers nationwide
o Area Marketing Cooperative (AMC)	Private entity also duly organized by Samahang Nayons which market farmers produce	23 AMC Managers nationwide
o Ministry of Agriculture & Food Regional Office (MAF-RO)	Government Ministry in-charge of Agriculture & Food	12 Regional Directors, nationwide
o Land Bank of the Philippines (LBP)	Government bank which extend loans to farmers	Farmers Development Assistance Group
o Development Bank of the Philippines (DBP)	Government Bank which extend loans to farmers	Agricultural Loans Department
o National Food Authority (NFA)	Government agency under MAF which handles procurement, marketing and price control of farmers produce	Ministry, Administration
o Ministry of Energy (MOE)	Government ministry which handles all aspects regarding energy	Minister, Director, Planning Service
o Bureau of Energy Development (BED)	Bureau under MOE which handles development of any form of energy	Director, Program Management Department
o National Food & Agriculture Council (NFAC)	Attached agency to MAF	Director
o National Science & Technology Authority (NSTA)	Attached agency to the Office of the President	Minister, Director, Committee on Science Foundations
o Bureau of Small & Medium Industries (BSMI)	Government agency under Ministry of Trade & Industry	Director
o Energy Research & Development Center (ERDC)	Government agency under MOE responsible for energy research and development	Director

Figure 12

INFLUENCE OF REACHED INSTITUTIONS ON FARMERS

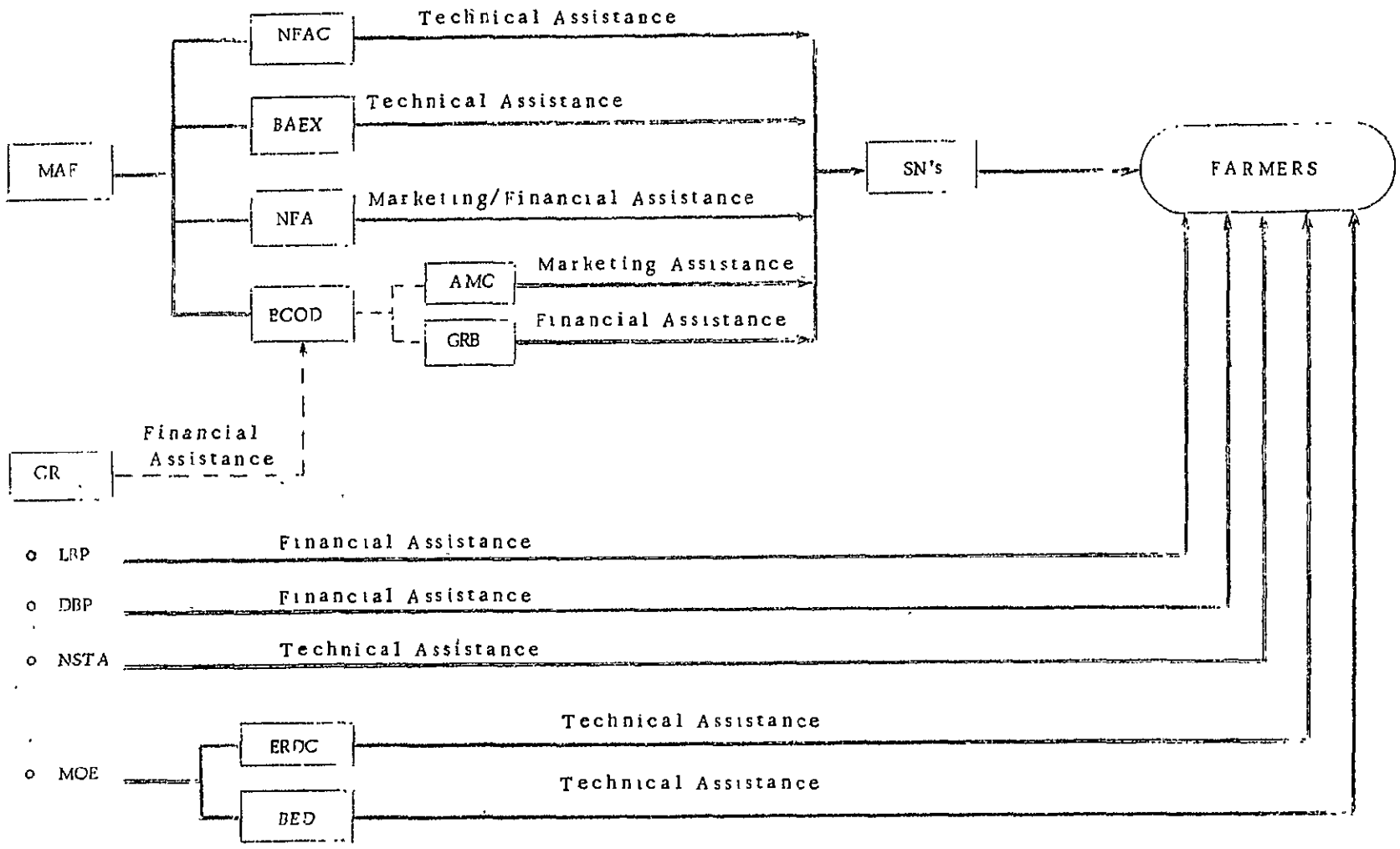

20 December 1984

Mr. Florencio Tamargo
General Manager
Cagayan Kalinga Apayao Area
Marketing Cooperative
Tuguegarao, Cagayan

Dear Mr. Tamargo:

We are glad to let you know about the low-cost grain dryer we developed under a grant from the US Agency for International Development.

The dryer - you will note in the enclosed pamphlet - is easily built from local materials, is fuelled by rice hull or firewood, and costs a fraction of the price of mechanical dryers. The greatest benefit to the small farmer, however, is that it allows him to dry his grain any time of the year and thus take advantage of the higher price (vis-a-vis that of wet palay) paid for properly dried palay.

Prototypes of the dryer are being field-tested in 10 pilot areas in the north.(Please see the list in the pamphlet.) We invite you to visit any of them so that you may see for yourself its operation.

We will appreciate it if your office can help us disseminate information on the dryer among your staff and interested parties.

Very truly yours,

CESAR N. SARINO
President

Agricultural Research Office

Republic of the Philippines
MINISTRY OF AGRICULTURE
Office of the Minister
Diliman, Quezon City 3008

Ref. No. 84-12-1036
December 28, 1984

Mr. Cesar Sarino
President, Economic Development
Foundation
8th Floor, Bankman Building
Ayala Ave., Makati
Metro Manila

Cesar

Dear Mr. Sarino:

This is to acknowledge your letter informing us of the low-cost grain dryer which you developed under a grant from the US Agency for International Development.

We will be very glad to assist you in disseminating information on this dryer if you can provide us with at least 12 copies of the pamphlet you sent us for distribution to our regional directors. I have noted the areas where you are testing the dryer and will instruct my staff to visit one or two of the sites. Right now, I'm quite busy and can't get away from Manila for a look-see myself. In any case, thank you for writing us, and I hope to hear from you again.

My warmest regards.

Yours truly,

EDGARDO C. QUISUMBING
Director

Cable: "Minagri" Manila Telephones: 998741; 98-85-35 Telex: (722)-27726 MOA-PH