- PN-ABS-216 ISN=89665

ICIMOD

PROJECT PUBLICATIONS
Exploration of Genetic Diversity in Himalayan Honeybee, *Apis cerana*

Submitted to the Office of the Science Advisor
U.S.Agency for International Development
Grant Number: 367-5600-G-SS-1147-00

Beekeeping Research and Development Programme
INTERNATIONAL CENTRE FOR INTEGRATED MOUNTAIN DEVELOPMENT

Himalayan Biodiversity: Conservation Strategies
ed. U. Dhar. Gyanodaya Prakashan, Nainital, India, 1993
pp. 415-428.

32

CURRENT STATE OF HIMALAYAN HONEYBEE (*APIS CERANA*) BIODIVERSITY AND STRATEGIES FOR ITS CONSERVATION

L. R. Verma

ABSTRACT

Himalayan region is rich in honeybee species and genetic diversity. Amongst the different native honeybee species, *Apis cerana* is equivalent of European honeybee, *Apis mellifera* because both can be domesticated and build parallel combs. Our research group in ICIMOD has successfully identified genetic variance in morphological characters of *Apis cerana* and these results reveal the occurrence of three sub species in the Himalayan region named as *Apis cerana cerana, Apis cerana himalayas* and *Apis cerana indica*. Each sub species has further locally adapted geographic ecotypes which differ from each other in several biological and economic characters. For example, sub-species *Apis cerana himalaya* can be further identified into three ecotypes that correspond to geographic distribution in (1) the Naga and Mizo hills, (2) Brahmaputra valley and Khasi hills, and (3) the foothills of north-east Himalayas. Despite its economic usefulness, beekeeping with *Apis cerana* is suffering precipitous decline and is threatened with extinction throughout its range. The major threat comes from its replacement with exotic and more prolific *Apis mellifera*, habitat alteration, pesticide poisoning, diseases and enemies particularly the recurrence of sacbrood virus disease and human predations especially through honey hunting methods. Such decline is undesirable in terms of

L.R.Verma, International Centre for Integrated Mountain Development, (ICIMOD), P.O. Box. 3226, Kathmandu, Nepal.

2

commercial use value, maintenance of biodiversity in natural ecosystems and productivity of farming systems. In order to reverse the above trends, there is a need to adopt strategies for conservation of *Apis cerana* through development and promotion of beekeeping with native bee species. Such development strategies should include studies on biology, behavior and management of *Apis cerana* in different eco- geographic zones. Major thrust should be on further genetic improvement through classical breeding and molecular techniques and evolving the appropriate apiary management technology based on the ecological and socio-economic conditions of the region. Zonation of beekeeping areas for *Apis cerana* and *Apis mellifera* appears to be the only logical solution for those species where latter species has already been introduced.

INTRODUCTION

Beekeeping is becoming an important component of present strategies for sustainable mountain agriculture and integrated rural development programmes. The role of beekeeping in providing food, nutritional, economic and ecological security to rural communities, especially those living in the developing countries of Asia, cannot be overlooked as it has always been linked with the cultural and natural heritage of rural communities. This, being a non-land based activity, does not compete with other resource demanding components of farming systems. At micro level, beekeeping is an additional income-generating activity and at macro-level, investment may be quite high but there is greater use of temporal and spatial diversity of natural resources such as pollen and nectar that otherwise go unutilised. The pollination activities of honeybees are an important integration function, as they contribute to the sustainability and diversity of agricultural and botanical resources in general, and thereby contribute to increased productivity and maintenance of biodiversity (Verma 1990 a).

The south and south-east Asian region is rich in honeybee species and genetic diversity. Amongst the different honeybee species, the Asian hive bee *Apis cerana* is equivalent to the European honeybee, *Apis mellifera* because both can be domesticated and build parallel combs. Great strides in modernizing beekeeping with the native and exotic honeybee species are being made in different eco-geographic zones (temperate, sub-temperate and sub-tropical) of the region. China at present is one of the major producer and exporter of honey and other hive products in the world. Similarly, India has taken the lead in south and south-east Asia utilizing honeybees for pollination purposes to boost yield and improve quality. In other countries of the region initiative efforts are being made to develop beekeeping on modern scientific lines. However, due to constraints such as lack of basic infrastructure, skilled manpower, training, extension facilities of basic and applied research programmes, the situation is far from satisfactory despite ideal climatic conditions and availability of diverse floral resources throughout the year. It is in the light of these observations, an attempt has been made in the present paper to review the current state *Apis cerana* diversity and suggest a practical framework

3

for the improvement of *Apis cerana* beekeeping in Asia (Verma 1992 a).

THE AMOUNT OF *APIS CERANA* GENETIC DIVERSITY

The genetic diversity of *Apis mellifera* has been organized into 24 sub-species having varied economic usefulness. These sub- species are adapted to a wide range of ecological conditions and at latitude ranging from 0° at equator to latitude as high as 50°N and 30°S. So far only four sub-species of *Apis cerana* are recognized, although there may be several more because of its wide range of geographic distribution (Ruttner 1987).

Our research group in ICIMOD has successfully identified genetic variance in morphological characters of *Apis cerana* and confirmed the accepted distribution of *A. cerana* sub- species in the Himalayan region. These sub-species have been named as *Apis cerana cerana*, *Apis cerana himalaya* and *Apis cerana indica* (Verma 1992 b).

According to a survey conducted by bee scientists in China, five different sub-species of *Apis cerana* representing different eco-geographic zones have been identified. These include *Apis cerana cerana*, *Apis cerana skorikovi*, *Apis cerana abaensis*, *Apis cerana hainanensis* and *Apis cerana indica*. (Zhen-ming *etal.* 1992).

Each sub-species has further locally adapted populations called ecotypes which differ from each other in several biological and economic characters. For example, we have successfully identified three ecotypes of sub-species *Apis cerana himalaya* that correspond to geographic distribution in (1) the Naga and Mizo hills, (2) Brahmaputra valley and Khasi hills, and (3) the foothills of the north-east Himalayas (Singh *et al.* 1990). On similar lines, Chinese bee scientists have also classified sub- species *Apis cerana cerana* into 5 ecotypes namely, Guangdong-Guanxi type, Hunan type, Yunan type, North China type and Changbaishan type (Zhen-ming *et al.* 1992). In some parts of Hindu Kush Himalaya, *Apis cerana cerana* matches European hive bee, *Apis mellifera* in commercial use value and has spectacular potentials for further genetic improvement by selective breeding and molecular research.

HOW MUCH GENETIC DIVERSITY IS BEING LOST

Despite its economic usefulness, beekeeping with native Asian hive bee, *Apis cerana* is suffering precipitous decline and is threatened with extinction in its entire native habitat. For example, in Japan, beekeeping with *Apis cerana* has been completely replaced by European hive bee *Apis mellifera* and only a few beekeepers and research institutes are raising *Apis cerana* colonies (Sakai 1992). In China, out of more than 8.5 million colonies of honeybees kept in modern hives, 70 per cent are European *Apis mellifera* and only 30 per cent are native *Apis cerana* (Zhen-ming *et al.* 1992). Similarly in south Korea, only 16 per cent beekeeping is with native *Apis cerana* and the remaining has been replaced by exotic *Apis mellifera* (Choi 1984).

4

Recent survey conducted by author as a part of USAID funded regional project in ICIMOD reveal that in Hindu Kush Himalayan region, beekeeping with native *Apis cerana* is being replaced by *Apis mellifera* at such a fast rate that populations of native *Apis cerana* is declining to a level that is no longer viable. These countries include Afghanistan, Bhutan, Burma, Nepal, India and Pakistan. In a small north Indian state of Himachal Pradesh, which has a centuries old tradition of beekeeping with *Apis cerana*, all the 43 beekeeping development and extension centres have been replaced by *Apis mellifera*. Even in Kashmir region of north-west Himalaya, where *Apis cerana* matches *Apis mellifera* in body size and honey production, only a few per cent of native *Apis cerana* colonies are left which may soon be wiped out. A visit to some mountain areas of north-west Frontier Province of Pakistan in May 1989, led Dr. Eva Crane to conclude that *Apis cerana* populations may soon become an endangered species (Crane 1992). Thus the existing long established craft of beekeeping with *Apis cerana* will soon get destroyed in the entire Hindu Kush Himalayan region.

CAUSES AND CONSEQUENCES OF DECLINING GENETIC DIVERSITY

In seeking ways to conserve genetic diversity of *Apis cerana*, it is necessary to have a clear understanding of the major threats which this bee species is facing in its own native habitat. Like any other threatened biological resources, decline in *Apis cerana* populations is also being caused by human mismanagement, misguided economic policies and faulty institutions. Major threats include the following.

i) Impact of Exotic Apis mellifera

Large scale importations and multiplication of exotic *Apis mellifera* into the developing countries of south and south- east Asia for better economic returns in terms of higher honey production and efficient pollination services has become a controversial subject.

On the one hand, some beekeeping experts and donor agencies are of the opinion that only exotic *Apis mellifera* can bring about the "Sweet Revolution" in this region in the same way as the high yielding exotic varieties of wheat are instrumental for the "Green Revolution". In parts of northern India and north-west Frontier Province of Pakistan, *Apis mellifera* has been the basis of a flourishing beekeeping industry and so much surplus honey is being produced that efficient marketing is becoming a major problem. Studies on the economics of beekeeping with native and exotic species of honeybees indicate such vast differences in the profit level that a farmer practicing beekeeping with exotic *Apis mellifera* in north-west Frontier Province of Pakistan can easily afford an imported car, whereas, the one continuing with native *Apis cerana* is still using bicycle (Verma 1990a).

On the other hand, many importations of *Apis mellifera* in south-east Asia have proved disastrous. When kept sympatrically, *Apis cerana* and *Apis mellifera*

5

colonies frequently robbed each other (Koeniger 1982). Another cause of failing co- existence of the two species is attempted intermating which produces lethal off-spring (Ruttner and Maul 1983). A new problem is the transfer of parasites from one species to another. A parasitic mite of broad and adults, *Varroa jacobsonii* can co-exist with *Apis cerana* and causes no serious damage to their native bee species. In several countries of Asia, where both these species are now kept together, the parasite has infested *Apis mellifera* colonies and became a serious pest to this unadapted host. There is now apprehension that through importations of *Apis mellifera*, *Apis cerana* populations in its native habitat will face serious risk of extinction.

ii) Habitat Alteration

In developing countries of south and south-east Asia, habitat alteration (especially due to deforestation) from a highly diverse natural ecosystems to far less diverse (often monocultures) agro-ecosystems is adversely affecting native bee populations in the region. This is one of the most important threat often related to land-use changes on a regional scale that involve great reduction in the area of natural vegetation. Such habitat destruction could lead to loss of different types of flowering plants and bee flora. Scarcity of bee flora due to environmental degradation not only leads to decline in colony numbers but also creates "stress conditions" for living bee colonies and increases their vulnerability to the pests and diseases, hunting and random population changes. Recent incidence of Thai sacbrood virus disease and European foul brood in *Apis cerana* might have arisen due to the stress conditions created by environmental degradation (for details please see "Diseases and Enemies" section below).

Destruction of forest habitat for growing agricultural and horticultural crops adversely affects the availability of floral resources because many of the staple crops such as rice, wheat, barley, potato etc. are of little or no value to honeybees. Due to increasing dearth of bee floral resources, colonies in the spring would not be able to build their own populations rapidly and this might force them to forego swarming or cause them cast smaller swarms that would reduce the probability of survival. In either case, the result would be an eventual decline in colony numbers.

Habitat destruction greatly limit the choice of honeybees to carefully choose a particular micro-habitat in which to build nests and rear off-spring and thus protect itself from the attacks of predators. In their absence of dense vegetation, nest sites are often visible from a long distance and colonies are not able to defend themselves effectively from the predators and they became more prone to absconding.

iii) Pesticide Poisoning of Honeybees

Beekeeping and pesticides both have become essential inputs of modern agricultural management technology. By ignoring either of two, global food production would be seriously impaired. Since the advent of synthetic pesticides several decades ago, the beekeeping industry, both in the developed and developing countries, have been incurring heavy losses. In developed countries, large scale

6

monoculture cultivation of crops and a high degree of mechanization had greatly amplified the problem of honeybee poisoning by pesticides. However, in recent years, education and public relations have achieved much in reducing bee losses due to pesticide poisoning in the developed world.

In developing countries, all species of honeybee still face very risk because agricultural practices often include insecticide application carried out in ignorance of indifference to the indispensability of bees. In all the developing countries of south and south-east Asia, a large area of land is being brought under the cultivation of high yielding exotic cultivars of crops and alongwith them their pests have also become introduced either through human error, accidentally or lack of proper quantitative facilities. For the control of these pests, a large number of biocides are coming into use. Because of the lack of information, farmers in the region use blanket application without caring as to what and how much to use and when. Unlike developed countries, there is also lack of legislation to prohibit the use of pesticides to the extent that kill bees. Integrated pest management technologies for protection of honeybees from harmful effects of broad-spectrum biocides are lacking. Such over reliance on chemical methods is adversely affecting environmental health including health hazards to human beings and decline in other non-target animal populations. Amongst the latter, honeybees because of their social behavior run the highest risk of pesticide poisoning.

iv) Diseases and Enemies

There are frequent reports of *Apis cerana* colonies being affected by nosema, virus cluster and sacbrood diseases in the Hindu Kush Himalayan region. Recently, the European foul brood disease has badly affected *Apis cerana* colonies in Kathmandu valley of Nepal.

Amongst the mites, *Acarapis woodi*, *Varroa jacobsonii*, *Neocyphalaeps*, *Tropilaelaps* sp and *Pymotes naferi* have been reported on *Apis cerana*. Amongst these, acarine disease poses a serious problem (Verma 1987).

Amongst the predators, five different species of wasps pose a serious threat to beekeeping industry in this region. However, because of its shimmering and evasive behavior, *Apis cerana* can resist the attacks of wasps better than *Apis mellifera*. Two species of waxmoths, *Gallaria mellonella* and *Archoria grisella* are serious pests in *Apis cerana* colonies as this native species of honeybee do not collect propolis to guard against the attack of moths.

In recent years, Thai sacbrood virus disease has been reported from all countries where *Apis cerana* is found. In early eighties, the incidence and severity of this disease increased at such an alarming rate that more than 95 per cent of colonies infected in different countries were killed by this disease (Rana *et al.* 1986, 1987). This resulted in great economic loss to beekeeping with *Apis cerana* in Asia not only in terms of honey and beewax production but also through adversely affected pollination services. The problem was particularly severe in the temperate region of the country where disease was more widespread than in tropical and sub-tropical region.

The presence of Thai sacbrood virus in the diseased colonies of *Apis cerana* in northern India was confirmed by conducting electron microscopic and serological studies (Rana *et al.* 1986, 87).

Different control measures recommended earlier to control the spread of sacbrood disease in *Apis mellifera* were unsuccessful in *Apis cerana* (Rana *et al.* 1986). However, about 5 percent of colonies in the affected areas were resistant and escaped the attack of this disease. Detailed investigations on such colonies indicate that some mechanism of resistance to the sacbrood virus disease exists in *Apis cerana*. In nature, this disease has a five years cycle, and after this period, about 5 per cent of the surviving colonies start multiplying in a normal way and normal population is then restored.

Due to the incidence to Thai sacbrood virus disease in *Apis cerana* in recent years, the beekeepers in the region had no choice but to adopt beekeeping with *Apis mellifera* which is not only free from this disease but is also giving higher economic returns to the farmers. Consequently, *Apis cerana* has been completely abandoned by the farmers in the region and it has now become endangered/threatened species of mere academic interest to the researchers in conservation biology.

v) Human Predations

Beekeeping in Hindu Kush Himalayan region is marked by a long history of honey hunting methods killed most of the bees, destroyed the brood and left no honey stores behind in the nest for consumption by bees during dearth periods. Such harmful exploitation by man resulted either in the loss of bee colonies or development of undesirable traits like absconding and swarming during the course of evolution. Since many of these absconding or swarming colonies have the tendency to return to the same nesting site each year, they are thus subjected to further harmful exploitation as these locations are well known to people. The net result of such human predation is both termporal and spatial decline in bee populations in its native habitat (Bishop 1992).

According to Gilpin and Soule (1986), loss of genetic diversity of species leading to its extinction is a systems phenomenon involving the interaction of processes and states. It is to be based on three interacting fields i.e. Population Phenotype (PP), Environment (E) and Population Structure and Fitness (PSF). When such model is applied in relation to loss of genetic diversity in *Apis cerana*, the first field (PP) includes behavioral and genetic components such as frequent swarming and robbing, production of large number of laying workers, inbreeding depression and drift inbreeding. A second field, the environment (E) is the context. It includes all abiotic and biotic factors that influence the population. In case of *Apis cerana*, the loss of habitat quantity and quality as a result of rapid agricultural transformation and deforestation in the region and pesticide hazards due to their indiscriminate use are important abiotic components. The biotic components include introduction of exotic *Apis mellifera*, epidemic of sacbrood virus disease and human predations as a result of traditional honey hunting methods. Population Phenotype (PP) and Environment (E) together determine the third field, the

8

Population Structure and Fitness (PSF). This is the field in which dynamic consequences of interactions of PP and E are manifested interms of patch distribution, population fragmentation, demographic randomness, reduced effective population size, growth rate and distribution leading to stochastic and deterministic extinction. The decay in one component can exacerbate not only itself but also the behavior of other components. Table 1 list the components of each of these fields and Figure 1 represents their overlaps and interactions schematically.

Table 1 : Components of population vulnerability analysis in *Apis cerana*

Field	Component
Environmental Perturbations (E)	- Loss of habitat quantity and quality - Exotic species : Introduction of European honeybee, *Apis mellifera* - Pathogens and parasites especially sacbrood virus infection - Human prediaons : Traditional honey hunting methods - Pesticide hazards
Population Phenotype (PP)	- Frequent swarming behaviour - Robbing behaviour - Large number of laying workers - Inbreeding depression - Drift inbreeding
Population Structure and Fitness (PSF)	- Patch distribution - Population fragmentation - Demographic randomness - Reduced effective population size, growth rate and distribution - Stochastic and deterministic extinction

(Modified from Gilpin and Soule 1986)

STRATEGIES FOR CONSERVATION OF *APIS CERANA*

Stock Improvement of *Apis cerana*

Many of the above mentioned sub-species/ecotypes of *Apis cerana* are at present not economically viable. Therefore, selection and breeding programme of superior genotypes to produce a bee suitable for intensive management is required. To achieve stock improvement, different *Apis cerana* sub-species and ecotypes should be accumulated at a central location and superior genotypes be identified

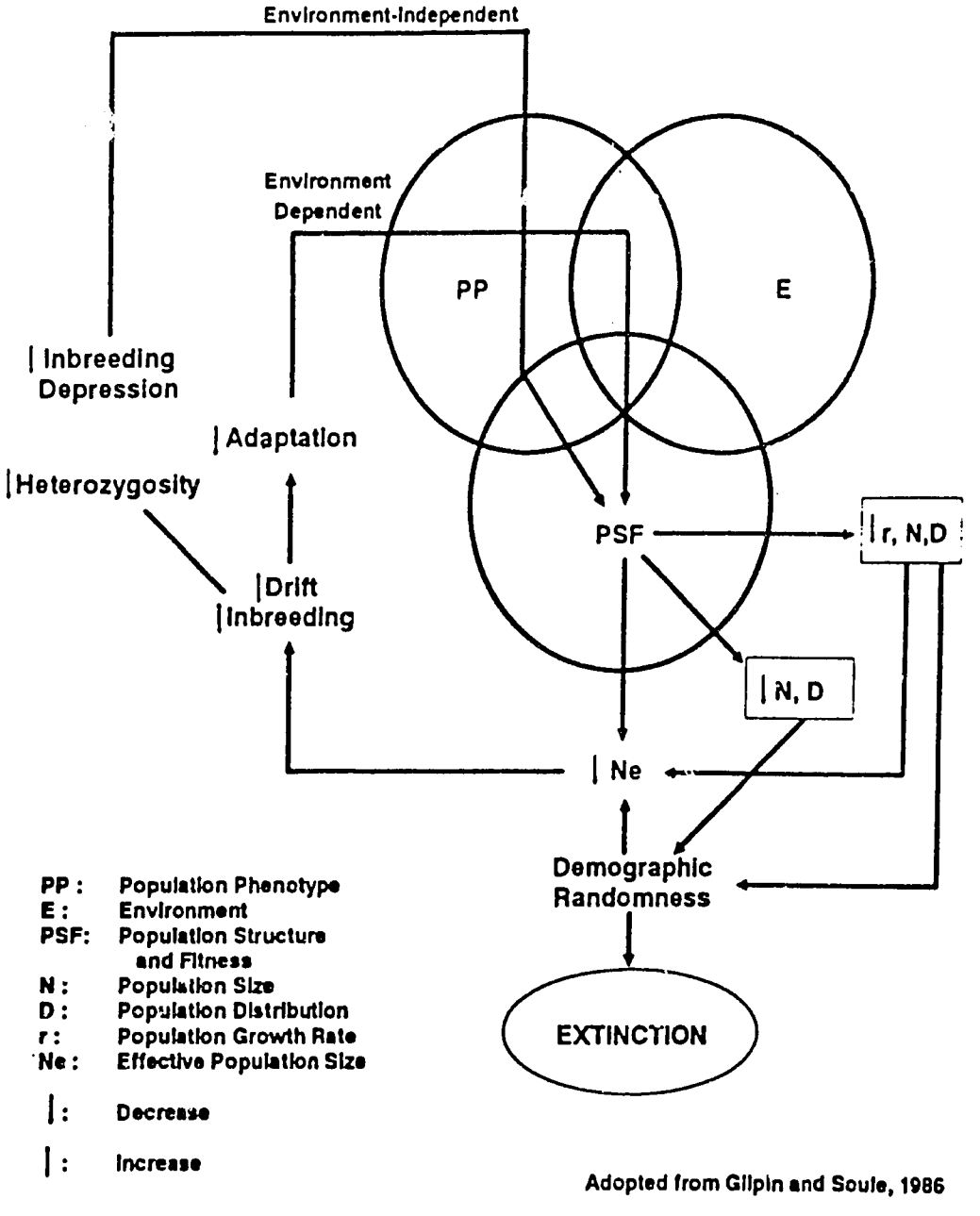

Fig. 1. Population Vulnerability Analysis (PVA). Case of *APIS CERANA*.

by integrating biometric and molecular data with behavioral and economic criteria. Another important pre-requisite for stock improvement is to evolve an efficient queen rearing for *Apis cerana* and also establish isolated mating stations for pure

line breeding. The latter is essential because artificial insemination in *Apis cerana* has unexpectedly turned out to be a difficult task due to very low volume of semen ejaculated by drones (Verma 1990b).

Apiary Management and Behavior Research

During the course of evolution, *Apis cerana* has developed certain behavioral characteristics such as frequent absconding and swarming which are essential for the survival of colonies but undesirable from beekeeping point of view.

Our research group has identified lack of sufficient bee flora, excessive handling, exposure of colonies to summer sunshine and incidence of sacbrood virus disease as major cause of absconding. Colony Performance Index (CPI) reaches zero even a week before absconding. Management practices like feeding sugar, provision of shade, providing queen gate at the hive entrance significantly reduce absconding. However, colonies affected with sacbrood virus disease show such a severe instinct of absconding that these may leave the hive even without queen bee.

One of the most effective way of reducing frequent swarming is to follow selection programme against this undesirable trait and removal of newly constructed queen cells during active swarming season also help to check it considerably.

Currently, recurrence of sacbrood virus epidemic after an earlier cycle during 1982-1986 has threatened beekeeping with *Apis cerana* throughout its range and is forcing beekeepers for its replacement by more profile *Apis mellifera*. Some colonies are still resistant to this disease and in the absence of any effective chemical control measures, vigorous selection programme need to be followed (Verma 1992b).

Pollination and Biodiversity Concerns

Apis cerana is a vital component of natural ecosystem. Its decline may have serious consequences for various entomophilous plant species. This bee species shows distinct advantages over *Apis mellifera* for pollination of agricultural crops. These include longer foraging hours, earlier initiation of foraging activity even at 5°C outside environmental temperature, short fight range, low cost of colony management during earth periods, no foraging competition with other native bee species, non- apis pollinators and co-evolution of this bee species with native crops etc. (Verma 1992c).

Keeping in view the above, promotion of beekeeping with *Apis cerana* with a domestic setting appears to be essential for the maintenance of biodiversity of forest and grassland ecosystem and for enhancing the productivity of farming systems.

Unfortunately, in developing countries of south and south-east Asia, the role of bees and beekeeping as an important biological input for enhancing the yield of agricultural crops has often been underestimated. The sustainable development of agriculture in the twenty first century will therefore necessitate reorientation of the present crop production technologies. Instead of making substantial use of physical inputs such as chemical fertilizers, biocides, irrigation, heavy machinery

etc., a shift towards biological inputs such as bee cross-pollination, biological nitrogen fixation, nutrient uptake, biotechnology etc. will become essential to increase food productivity. Moreover, such biological based agriculture will only have positive ecological consequences. Thus, there is a need to create awareness amongst policy makers, planners and aid agencies about promoting bees and beekeeping as an important component of present day strategies for sustainable agriculture and rural development programme. (Verma 1990a).

Zonation of Beekeeping Areas

In those countries of south and south-east Asia, where *Apis mellifera* has already been introduced, beekeeping industry is passing through a dilemma.

In order to resolve the above dilemma, zonation of beekeeping areas for *Apis cerana* and *Apis mellifera* beekeeping appears to be the only logical solution. Based on past several years of experience, it is now well documented that for sub-tropical region *Apis mellifera* especially *Ligustica* race is well suited and is performing well. In the temperate region, beekeeping with *Apis cerana* should be encouraged as different sub-species/ecotypes of this native bee species are more prolific and superior genotypes than its counterparts in sub-tropical region. Such zonation of *Apis cerana* and *Apis mellifera* in different eco-geographic zones have been very successful in China and India is also following the same strategy. This would greatly solve the problem of interspecies competition and both species could be complimentary to each other.

Training and Research Centre for Asian Bees and Beekeeping

For future development of beekeeping with *Apis cerana* in south and south-east Asia, a coordinated and systematic effort by establishing a training and research centre for Asian Bee and Beekeeping in this region is essential. This centre should have a continuing internationally funded programme in beekeeping training and research with the following mandate, objectives and organization.

Mandate and Objectives

1. The overall objective should be to generate and deliver improved beekeeping management technology through research and training primarily on Asiatic species of honeybee that will contribute to increased production and quality of different hive products (Honey, Beewax, Royal Jelly, Propolis and Venom) as well as better bee pollination service principally to the regional needs of south and south-east Asian countries thereby ensuring a good source of income and nutritious food to rural poor communities living at or below subsistence level.

2. To assist different Government agencies, beekeeping communities and commercial enterprises to create a cadre of beekeeping experts by training them in both practical and scientific aspects of beekeeping.

3. To provide information and advisory services and also to act as a co-ordinating centre for international co-operation in beekeeping.

4. To assist different developing countries of this region to establish a national programme in beekeeping.

Organization

The proposed centre may have three major programmes in beekeeping.

i) Research
ii) Training
iii) International Co-operation

Research may be carried out in the following basic and applied areas primarily on Asiatic species of honeybee.

a) Bee Biology
b) Bee Pathology
c) Bee Botany and Pollination
d) Beekeeping Technology and Equipment
e) Beekeeping Economics and Marketing Hive Products
f) Apitherapy

Training courses both in practical and scientific aspects of beekeeping may be offered for the benefit of beekeepers, beekeeping instructors, beekeeping extension personnel from the department of agriculture, forestry and rural development representing different beekeeping communities or associations, commercial enterprises and Government departments from the entire region of south and south-east Asia.

International co-operation programme will deal with technology sharing and technology transfer for the advancement of beekeeping in this region. It will organise regional training programmes, workshops, seminars, conferences and monitoring tours. It will also act as information dissemination centre by publishing extension literature for the popularization and promotion of beekeeping, advisory services to individual participating countries and on regional basis also.

All the above programmes may be carried out by keeping continuing contacts with national and international agencies. Establishment of Asian Apicultural Association (AAA) is a step forward in this direction and this organization should take initiative efforts for the establishment of training and research centre for Asian bees and beekeeping.

The Values of Conserving *Apis cerana* Biodiversity

The natural products which honeybees produce and human now use are honey, royal jelly, pollen, propolis, beewax and bee venom. These materials have been widely used as nutritional food and for medicinal and pharmacological purposes since ancient times. These natural products of beekeeping industry has both consumptive and productive use value because these can be consumed effectively without passing through a market and at the same time these hive products can be commercially harvested for exchange in formal markets throughout the world. Every common man is well aware of these direct values of this important biological resource.

However, besides these direct values, honeybees provide non- consumptive benefits of conserving botanical resources which may far outweigh direct values when they are computed. These social insects deal with such primary function of

ecosystem nich involve reproduction, including pollination, gene flow, cross-fertilization, maintenance of biodiversity, environmental forces and species that influence the acquisition of useful genetic traits in economic species and maintenance of evolutionary processes, leading to constant dynamic tension amongst the competitors in ecosystems. These non-consumptive benefits can be harnessed to maximum extent through the use of native bee species like *Apis cerana* than with exotic *Apis mellifera*.

ACKNOWLEDGEMENT

This research was supported in part under Grant No. 367-5600-G- SS-1147-00 program in Science and Technology Co-operation, Office of Science Advisor, U.S. Agency for International Development.

REFERENCES

Bishop, M.1992. Strategies for beekeeping development in Nepal. In: *Honeybees in Mountain Agriculture*. (ed.) L.R.Verma, Oxford and IBH Publishing Co., New Delhi.

Choi, S.Y. 1984. Brief report on the status of Korean Beekeeping. pp. 170-190. Proceedings of the Expert Consultation (ed.) FAO, pp. 170-190.

Crane, Eva. 1992. Beekeeping in mountain life support systems. In: *Honeybees in Mountain Agriculture*. (ed.) L.R. Verma. Oxford and IBH Publishing Co., New Delhi.

Koeniger, N. 1982. Interactions among the four species of *Apis*. In: *Biology of Social Insects*. (ed.) M.D. Breed *et al*. Westview Prees, Boulder, USA.

Gilpin, M.E. and M.E. Soule. 1986. Minimum viable populations: Processes of species extinction. In: *Conservation Biology The Science of Scarcity and Diversity*. (ed.) M.E. Soule. Sinauer Associates, Inc. Publishers, Sunderland, Massachusetts.

Rana, B.S., I.D. Garg, S.M. Paul Khurana, L.R. Verma and H.O. Agarwal. 1986. Thai sacbrood virus of honeybees (*Apis cerana indica* F.) in north-west Himalaya. Indian J. Virol 2: 127-13.

Rana, B.S., I.D Garg, S.M. Paul Khurana, L.R. Verma and H.O. Agrawal. 1987. Incidence of Thai sacbrood virus disease in *Apis cerana indica* F. in south-east Asia. In: *Chemistry and Biology of Social Insects*. (ed.) J.Eder and H.Rembold, Munchen: Peperny Verlag.

Ruttner, F. 1987. *Biogeographic and Taxonomy of Honeybee*. Berlin: Springer Verlag.

Ruttner, F.and V.Maul. 1983. Experimental analysis of reproductive interspecies isolation of *Apis mellifera* and *Apis cerana*. Apidologie 14:309-324.

Sakai, T.1992. *Apis cerana* beekeeping in Japan. In: *Honeybees in Mountain Agriculture*. (ed.) L.R. Verma. Oxford and IBH Publishing Co., New Delhi.

Singh, M.P., L.R. Verma and H.V.Daly. 1990. Morphometric analysis of the Indian

14

honeybee in the north-east Himalayan region. *J. Apic. Res.* 29:3-14.

Verma, L.R. 1987. Current status of parasitic mites in relation to beekeeping with *Apis cerana* F. and *Apis mellifera* L. in India. Proc.FAO Workshop on Parasitic Bee Mites and Their Control, Pulawy: Poland: pp. 195-198.

Verma, L.R. 1990a. *Beekeeping in Integrated Mountain Development. Econonic and Scientific Perspectives.* Oxford and IBH Publishing Co., New Delhi. pp. 367.

Verma, L.R. 1990b. Motility and metabolism of honeybee spermatozoa in the spermatheca and during *in vitro* storage. In: *Advances in Invertebrate Reproduction.* (ed.) M.Hoshi and O.Yamashita. Elsevier Science Publications: New York.

Verma, L.R. 1992a. On the declining genetic diversity of *Apis cerana* F. in Hindu Kush Himalayan Region. International Apiculture Conference on Asian Bees and Bee Mites, Bangkok, 9-14 Feb, 92. (in press).

Verma, L.R. 1992b. *Honeybees in Mountain Agriculture.* Oxford and IBH Publishing Co., New Delhi, pp. 274.

Verma, L.R. 1992c. Exploration of Genetic Diversity in Himalayan honeybee, *Apis cerana* F. ISAID Annual Report, pp. 10.

Zhen-ming Jin; Yang Guanhunag, Huang Shuangxiu, Liang Shikui and Ren Zangin. 1992. The Advancement of beekeeping science and technology in China. In: *Honeybees in Mountain Agriculture* (ed.) L.R. verma. Oxford and IBH Publishing Co., New Delhi.

INTERACTION

S.C.Nath: What is the potential of honey production in India?

L.R.Verma: 4-5 million colonies. One colony gives upto 10 Kg of honey in India.

B.P.Dey: Honey of Cherapunji is believed to be of high demand. Is it due to the occurrence of any particular species?

L.R. Verma: No, it is due to the citrus flavour of honey.

15

Asian Apiculture
Proc. Int. Con. Asian Honeybee and Bee Mites
eds. Lawrence J. Conner, Thomas Rinderer,
H. Allen Sylvester and Siriwat Wongsiri, 1992. pp. 81-88.

MS # 2

Declining genetic diversity of *Apis cerana* in Hindu Kush-Himalayan region

L. R. Verma

International Centre for Integrated Mountain Development (ICIMOD)
P.O. Box 3226, Kathmandu, Nepal

Introduction

Biodiversity in honey bees encompasses all species and subspecies of the genus *Apis* and the ecosystems and ecological processes of which they are parts. Biodiversity is generally considered at three different levels: genetic, species and ecosystem diversity. This classification of biodiversity applies equally well to honey bee biodiversity.

The Hindu Kush-Himalayan region is the richest in the world in honey bee species diversity. There are at present four or more species of honey bees found in the Hindu Kush-Himalayan region. Among these, *Apis cerana*, *Apis dorsata/laboriosa* and *Apis florea* are native to this region, whereas, the European honey bee, *Apis mellifera*, has been introduced in some countries of this region for higher honey production. The Himalayan hive bee, *Apis cerana*, is equivalent to the European hive bee, *Apis mellifera*, because both can be domesticated and are similar in nest building and dancing behavior.

Genetic diversity is the sum total of genetic information contained in the genes of individual animals that inhabit the earth. Genetic diversity of the European honey bee, *Apis mellifera*, has been organized in the 24 sub-species having varied economic usefulness. These sub-species are adapted to a wide range of ecological conditions and at latitude ranging from 0° at the equator, to latitude as high as 50° N and 30° S (Crane 1992, Ruttner 1988). There is very little information available on genetic diversity of different species of honey bees found in the Hindu Kush-Himalayan region (Verma 1990).

Current status of beekeeping with *Apis cerana* in the Hindu Kush-Himalayas

Despite its economic usefulness, beekeeping with the native Asian hive bee, *Apis cerana*, is suffering a precipitous decline and it is threatened with extinction

16

in its entire native habitat. For example, in Japan, beekeeping with *Apis cerana* has been completely replaced by the European hive bee *Apis mellifera* and only a few beekeepers and research institutes are raising *Apis cerana* colonies (Sakai 1992). In China, out of more than 8.5 million colonies of honey bees kept in modern hives, 70 percent are European *Apis mellifera* and only 30 percent are native *Apis cerana* (Zhenming *et al.* 1992). Similarly in South Korea, only 16 percent of beekeeping is with the native *Apis cerana* and the remainder has been replaced by exotic *Apis mellifera* (Choi 1984).

A recent survey conducted by the author as a part of the USAID-funded Project in ICIMOD, revealed that in Hindu Kush-Himalayan countries, beekeeping with native *Apis cerana* is being replaced by *Apis mellifera* at such a fast rate that populations of native *Apis cerana* are declining to a level that they are no longer viable. These countries include Afghanistan, Bhutan, Burma, Nepal, India and Pakistan. In the small north-Indian state of Himachal Pradesh, which has a centuries old tradition of beekeeping with *Apis cerana*, all the 43 beekeeping development and extension centers have been replaced by *Apis mellifera*. Even in the Kashmir region of the northwest Himalayas, where *Apis cerana* matches *Apis mellifera* in body size and honey production, only a few percent of native *Apis cerana* colonies are left and may soon be wiped out. A visit in May 1989 to some mountain areas of the northwest frontier province of Pakistan, led by Dr. Eva Crane, concluded that *Apis cerana* populations may soon become an endangered species (Crane 1992). Thus the existing long established craft of beekeeping with *Apis cerana* will soon get destroyed in the entire Hindu Kush-Himalayan region.

Apis cerana genetic resources are declining

In seeking ways to conserve genetic diversity of *Apis cerana*, it is necessary to have a clear understanding of the major threats which this bee species is facing in its own native habitat. Like any other threatened biological resource, decline in *Apis cerana* populations is also being caused by human mismanagement, misguided economic policies and faulty institutions. Major threats include the following:

Impact of exotic Apis mellifera

Large scale importations and multiplication of exotic *Apis mellifera* into the developing countries of south and southeast Asia for better economic returns in terms of higher honey production and efficient pollination services has become a controversial subject.

17

On the one hand, some beekeeping experts and donor agencies are of the opinion that only exotic *Apis mellifera* can bring about the "sweet revolution" in this region in the same way as the high yielding exotic varieties of wheat are instrumental for the "Green Revolution." In parts of northern India and the northwest frontier province of Pakistan, *Apis mellifera* has been the basis of a flourishing beekeeping industry and so much surplus honey is being produced that efficient marketing is becoming a major problem. Studies on the economics of beekeeping with native and exotic species of honey bees indicate such vast differences in the profit level that a farmer practicing beekeeping with exotic *Apis mellifera* in the northwest frontier province of Pakistan can easily afford an imported car, whereas, the one continuing with native *Apis cerana* is still using a bicycle (Verma 1990).

On the other hand, many importations of *Apis mellifera* in south and southeast Asia have proved disastrous. When kept sympatrically, *Apis cerana* and *Apis mellifera* colonies frequently robbed each other (Koeniger 1982). Another cause of failing co-existence of the two species is attempted inter-mating which produces lethal offspring (Ruttner and Maul 1983). A new problem is the transfer of parasites from one species to another. A parasitic mite of brood and adults, *Varroa jacobsoni*, can co-exist with *Apis cerana* and cause no serious damage to the native bee species. In several countries of Asia, where both these species are now kept together, the parasite has infested *Apis mellifera* colonies and become a serious pest to this unadapted host. There is now apprehension that through importations of *Apis mellifera*, *Apis cerana* populations in its native habitat will face serious risk of extinction.

Habitat alteration

In developing countries of south and southeast Asia, habitat alteration (especially due to deforestation) from highly diverse natural ecosystems to far less diverse (often monocultures) agro-ecosystems is adversely affecting native bee populations in the region. This is one of the most important threats often related to land-use changes on a regional scale that involve great reduction in the area of natural vegetation. Such habitat destruction could lead to loss of different types of flowering plants and bee flora. Scarcity of bee flora due to environmental degradation not only leads to decline in colony numbers but also creates "stress conditions" for living bee colonies and increases their vulnerability to pests and diseases, hunting and random population changes. Recent incidence of Thai

18

sacbrood virus disease and European foulbrood in *Apis cerana* might have arisen due to the stress conditions created by environmental degradation (for details please see "Diseases and enemies" below).

Destruction of forest habitat for growing agricultural and horticultural crops adversely affects the availability of floral resources because many of the staple crops such as rice, wheat, barley and potato are of little or no value to honey bees. Due to the increasing dearth of bee floral resources, colonies in the spring would not be able to build their own populations rapidly and this might force them to forego swarming or cause them to cast smaller swarms that would reduce the probability of survival. In either case, the result would be an eventual decline in colony numbers.

Habitat destruction greatly limits the ability of honey bees to carefully choose a particular micro-habitat in which to build nests and rear offspring and be protected from the attacks of predators. In the absence of dense vegetation, nest sites are often visible from a long distance and colonies are not able to defend themselves effectively from the predators and they became more prone to absconding(Underwood 1992).

Pesticide poisoning of honey bees

Beekeeping and pesticides have both become essential inputs of modern agricultural management technology. By ignoring either of the two, global food production would be seriously impaired. Since the advent of synthetic pesticides several decades ago, the beekeeping industry, both in the developed and developing countries, has been incurring heavy losses. In developed countries, large-scale monoculture cultivation of crops and a high degree of mechanization has greatly amplified the problem of honey bee poisoning by pesticides. However, in recent years, education and public relations have achieved much in reducing bee losses due to pesticide poisoning in the developed world.

In developing countries, all species of honey bee still face very high risk because agricultural practices often include insecticide application carried out in ignorance or indifference to the indispensability of bees. In all the developing countries of south and southeast Asia, a large area of land is being brought under the cultivation of high yielding exotic cultivars of crops and along with them their pests have also become introduced either through human error, accident or lack of proper quarantine facilities. For the control of these pests, a large number of biocides are coming into use. Because of the lack of information, farmers in the region use

blanket application without caring what and how much to use and when. Unlike developed countries, there is also lack of legislation to prohibit the use of pesticides to the extent that kills bees. Integrated pest management technologies for protection of honey bees from harmful effects of broad-spectrum biocides are lacking. Such overreliance on chemical methods is adversely affecting environmental health including health hazards to humans and decline in other non-target animal populations. Amongst the latter, honey bees, because of their social behavior, run the highest risk of pesticide poisoning.

Diseases and enemies

There are frequent reports of *Apis cerana* colonies being affected by nosema, virus cluster and sacbrood diseases in the Hindu Kush-Himalayan region. Recently, European foulbrood disease has badly affected *Apis cerana* colonies in Kathmandu valley, Nepal.

Amongst the mites, *Acarapis woodi*, *Varroa jacobsoni*, *Neocypholaelaps*, *Tropilaelaps* sp and *Pyemotes naferi* have been reported on *Apis cerana*. Amongst these, acarine disease poses a serious problem (Verma 1987).

Amongst the predators, five different species of wasps pose a serious threat to the beekeeping industry in this region. However, because of its shimmering and evasive behavior, *Apis cerana* can resist the attacks of wasps better than *Apis mellifera*. Two species of wax moths, *Galleria mellonella* and *Achroia grisella* are serious pests in *Apis cerana* colonies as this native species of honey bee does not collect propolis to guard against the attack of moths.

In recent years, Thai sacbrood virus disease has been reported from all countries where *Apis cerana* is found. In the early nineteen eighties, the incidence and severity of this disease increased at such an alarming rate that more than 95 percent of colonies infected in different countries were killed by this disease (Rana *et al.* 1986, 1987). This resulted in great economic loss to beekeeping with *Apis cerana* in Asia not only in terms of honey and beeswax production but also through adversely affected pollination services. The problem was particularly severe in the temperate region of the country where disease was more widespread than in tropical and sub-tropical regions.

The presence of Thai sacbrood virus in the diseased colonies of *Apis cerana* in northern India was confirmed by conducting electron microscopic and serological studies (Rana *et al.* 1986, 1987).

Different control measures recommended earlier to control the spread of

sacbrood disease in *Apis mellifera* were unsuccessful in *Apis cerana* (Rana *et al.* 1986). However, about 5 percent of colonies in the affected areas were resistant and escaped the attack of this disease. Detailed investigations on such colonies indicate that some mechanism of resistance to the sacbrood virus disease exists in *Apis cerana*. In nature, this disease has a five-year cycle, and after this period, about 5 percent of the surviving colonies start multiplying in a normal way and normal population is then restored.

Due to the incidence of Thai sacbrood virus disease in *Apis cerana* in recent years, the beekeepers in the region had no choice but to adopt beekeeping with *Apis mellifera* which is not only free from this disease but is also giving higher economic returns to the farmers. Consequently, *Apis cerana* has been completely abandoned by the farmers in the region and it has now become an endangered/threatened species of mere academic interest to the researchers in conservation biology.

Human predation

Beekeeping in the Hindu Kush-Himalayan region is marked by a long history of honey hunting. Traditional honey hunting methods killed most of the bees, destroyed the brood and left no honey stores behind in the nest for consumption by bees during dearth periods. Such harmful exploitation by man resulted either in the loss of bee colonies or development of undesirable traits like absconding and swarming during the course of evolution. Since many of these absconding or swarming colonies have the tendency to return to the same nesting site each year, they are thus subjected to further harmful exploitation as these locations are well known to people. The net result of such human predation is both temporal and spatial decline in bee populations in their native habitat (Bishop 1992).

The values of conserving *Apis cerana* bio-diversity

The natural products which honey bees produce and humans now use are honey, royal jelly, pollen, propolis, beeswax and bee venom. These materials have been widely used as nutritional food and for medicinal and pharmacological purposes since ancient times. These natural products of the beekeeping industry have both consumptive and productive use value because they can be consumed directly without passing through a market and at the same time these hive products can be commercially harvested for exchange in formal markets throughout the world. Every common man is well aware of these direct values of this important biological resource.

BEST AVAILABLE DOCUMENT

Howeve... these direct values, honey bees provide non-consumptive benefits of co... botanical resources which may far outweigh direct values when they are ...d. These social insects deal with such primary functions of the ecosysten ...duction, including pollination, gene flow, cross-fertilization, mainte... biodiversity, environmental forces and species that influence the acquisitio... genetic traits in economic species and maintenance of evolutionary ... leading to constant dynamic tension amongst the competitors in ecosy... These non-consumptive benefits can be harnessed to a maximum ext... through the use of native bee species like *Apis cerana* rather than with exotic *A*...

Acknowle...nt

The auth... reported here was supported by USAID's "Program in Science and T... Cooperation" (PSTC).

Reference...d

Bishop, M. 1992. ... for beekeeping development in Nepal. *In* Honey bees in Mountain Agricultur... Verma, Oxford and IBH Publishing Co., New Delhi.

Choi, S. Y. 1984. ... the status of Korean Beekeeping. pp 170-190. *Proceedings of the Expert Consultat...*

Crane, E. 1992. ... in mountain life support systems. *In* Honey bees in Mountain Agricultur... Verma. Oxford and IBH Publishing Co. New Delhi.

Koeniger, N. 198... ...ns among the four species of *Apis*. *In* The Biology of Social Insects. ed. M. D. Bre... ...view Press: Boulder, USA.

Rana, B. S., I. D. ... Khurana, L. R. Verma and H. O. Agrawal. 1986. Thai sacbrood Virus of honey be... ...ra *indica* F.) in northwest Himalayas. *Indian J. Virol* 2: 127-13.

Rana, B. S., I. D. ... P. Khurana, L. R. Verma and H. O. Agrawal. 1987. Incidence of Thai sacbrood vi... in *Apis cerana indica* F. in southeast Asia. *In* Chemistry and Biology of Social Inse... ...der and H. Rembold, Munchen : Peperny Verlag, pp. 640-641.

Ruttner, F. 1988. *I*... ...y *and taxonomy of honeybees*. Springer Verlag: Berlin, Germany 284 pp.

Ruttner, F. and V. ... 3. Experimental analysis of reproductive interspecies isolation of *Apis mellifera* an... ...ria. *Apidologie* 14: 309-324.

Sakai, T. 1992. *Ap*... ...eekeeping in Japan. *In* Honey bees in Mountain Agriculture. ed. L.R. Verma. Ox... IBH publishing Co. New Delhi.

Underwood, B. A. ... pact of human activities on Himalayan Honey bee, *Apis laboriosa*. *In* Honey bee... ...tain Agriculture. ed. L. R. Verma. Oxford and IBH publishers. New Delhi.

Verma, L. R. 1987 ... atus of parasitic mites in relation to beekeeping with *Apis cerana* F. and *Apis mellife*... ...a. *Proc. FAO Workshop on Parasitic Bee Mites and Their Control*, Pulawy: Poland: pp ...

Verma, L. R. 199... ...ing in Integrated Mountain Development. Economic and Scientific Perspective... ...nd IBH Publishing Co. New Delhi. pp. 367.

Zhenming, J., Y. G... ..., H. Shuangqiu, L. Shikui and R. Zangin. 1992. The Advancement of beekeeping... China. *In* Honey bees in Mountain Agriculture ed. L. R. Verma. Oxford and IBH p... ...Co. New Delhi.

Abstract

A recent survey conducted by the author in some mountainous areas of the Hindu Kush-Himalayan region reveals that *Apis cerana* populations are likely to decline to a level that is no longer viable. The major threat for such a decline comes from its replacement by a more productive type of beekeeping with European *Apis mellifera* which is now becoming the basis of the flourishing industry in the region. Other causal factors for loss of this valuable genetic resource are habitat alteration from highly diverse natural ecosystems to far less diverse (often monoculture) agro-systems, indiscriminate use of biocides, incidence of Thai sacbrood virus disease and over-harvesting of hive products by traditional honey hunting methods. Such a rapid decline in genetic diversity of *Apis cerana* would not only mean serious negative impact on the income level and nutrition source of mountain communities living at or below the subsistence level but also serious impairment of essential ecological services and loss of biodiversity. Keeping in view the above, ICIMOD in Nepal with a grant from the USAID has initiated a regional project on conservation of *Apis cerana*. The project studies include identification of sub-species and geographic ecotypes through classical and molecular techniques, and behavioral and apiary management research. The findings of this research are discussed in this paper.

Key Words:

Apis cerana, biodiversity, habitat alteration, extinction, pesticides, bee diseases and enemies, human predation, introduced species, Himalayas.

Prof. L. R. Verma is presently a senior professional staff member and principal investigator of a USAID-funded regional project on the Genetic Diversity of the Himalayan Honey bee, Apis cerana *F., in the International Centre for Integrated Mountain Development (ICIMOD), Kathmandu, Nepal. His major research interests are honey-bee genetic diversity, reproductive biology, pollination ecology, Himalayan economic development and sustainable agriculture.*

23

Genetic Diversity in *Apis cerana**

MS # 3

by L R Verma

The genetic diversity of *Apis mellifera* has been organised into 24 subspecies having varied economic usefulness. These subspecies are adapted to a wide range of ecological conditions and range from 0° at the equator to latitudes as great as 50°N and 30°S.

So far only four subspecies of *Apis cerana* are recognised, although there may be several more because of its wide range of geographical distribution.

One research group in the International Centre for Integrated Mountain Development (ICIMOD) has successfully identified genetic variance in morphological characters of *Apis cerana* subspecies in the Himalayan region. These subspecies are named *Apis cerana cerana*, *Apis cerana himalaya* and *Apis cerana indica*. According to bee scientists in China five different subspecies of *Apis cerana* representing different eco-geographic zones have been identified. These include *Apis cerana cerana*, *Apis cerana sichuanensis*, *Apis cerana abdensis*, *Apis cerana hainanensis* and *Apis cerana indica*.

Each subspecies has further locally adapted populations called ecotypes which differ from each other in several biological and economic characters. For example, we have successfully identified three ecotypes of subspecies *Apis cerana himalaya* that correspond to geographic distribution in 1) the Naga and Mizo Hills, 2) Brahmaputra Valley and Khasi Hills, and 3) the foothills of the north-east Himalayas. On similar lines, Chinese bee scientists have also classified *Apis cerana cerana* into five ecotypes namely Guangdong-Guanxi type, Hunan type, Yunan type, North China type and Changbaishan type. In some parts of the Hindu Kush Himalaya, *Apis cerana cerana* matches the European hive bee *Apis mellifera* in commercial value and has spectacular potential for further genetic improvement.

STOCK IMPROVEMENT

Many of the above mentioned subspecies and ecotypes of *Apis cerana* are at present not economically viable. Therefore selection and breeding programmes to produce a bee suitable for intensive management is required. To achieve stock improvement, different *Apis cerana* subspecies and ecotypes should be accumulated at a central location and superior genotypes be identified. Another important pre-requisite for stock improvement is to evolve efficient queen rearing for *Apis cerana* and also establish isolated mating stations for pure line breeding. The latter is essential because instrumental insemination in *Apis cerana* has unexpectedly turned out to be a difficult task due to very low volumes of semen ejaculated by drones.

MANAGEMENT

[illegible] use of [illegible] *Apis cerana* has developed certain behavioural characteristics such as frequent absconding and swarming which are essential for the survival of colonies but undesirable from a beekeeping point of view.

ABSCONDING

Our research group has identified a lack of sufficient bee flora, excessive handling, exposure of colonies to summer sunshine and incidence of sacbrood virus disease as major causes of absconding. Colony performance index (CPI) based on the number of pollen-bringing foragers can be used to predict absconding. Based on this, native bee species start showing symptoms of absconding even two weeks before and CPI reaches zero even a week before absconding. Management practices like feeding sugar, providing shade and providing queen gates at the hive entrance significantly reduce absconding. However, colonies affected with sacbrood virus disease show such a severe instinct of absconding that these may leave the hive even without the queen.

SWARMING

One of the most effective ways of reducing frequent swarming is to following selection programmes against this undesirable trait. Removal of newly constructed queen cells during the active season also helps to check swarming.

The recurrence of sacbrood virus after an earlier cycle during 1982-1986 has threatened beekeeping with *Apis cerana* throughout its range and is forcing beekeepers to replace it with more prolific *Apis mellifera*. Some colonies are still resistant to this disease and in the absence of any effective chemical control measures, a vigorous selection programme needs to be followed.

Grafting larvae of *Apis cerana* to rear queens

* *Part of this paper was delivered by the author as Chairperson and Organiser of the Symposium entitled* Apis cerana *and other honey bees of Apidae, during the XIX International Congress of Entomology, Beijing, China 1992*

BEST AVAILABLE DOCUMENT

24

Proc. USAID - PSTC/CDR Networking Meeting on
Biodiversity Honolulu, Hawaii, 1992

MS # 4

GENETIC DIVERSITY IN HIMALAYAN HONEYBEE *APIS CERANA* F.

L.R. Verma, International Centre for Integrated Mountain Development (ICIMOD), P.O. Box 3226, Kathmandu, Nepal

Project activities include morphometric, molecular, pollination, behavior, apiary management research and training in beekeeping with Himalayan honeybee, *Apis cerana* F. The main objective is promotion and development of modern beekeeping with *Apis cerana* and save it from threatened extinction.

For morphometric research, survey and sample collection work of *Apis cerana* is being carried out throughout Hindu Kush-Himalayan range as well as other countries of Asia where this been species occurs: So far this project has successfully identified three sub-species namely *Apis cerana cerana*, *Apis cerana himalaya* and *Apis cerana indica* from Indian and Nepal Himalayan region. In some parts, *Apis cerana cerana* matches European honeybee, *Apis mellifera* in commercial use value and has spectacular potentials for further genetic improvement by selective breeding and molecular research. ICIMOD has signed a cooperative agreement with USDA-ARS Honeybee Research Laboratory, Baton Rouge, Louisiana and more than 90 *Apis cerana* worker bee samples representing different eco-geographical zones of Himalayas have been sent to this laboratory for population genetic analysis of mitochondrial and nuclear DNA. Survey work on beekeeping with *Apis cerana* reveals that this bee species populations are on the decline throughout its range due to its replacement by more prolific *Apis mellifera*, habitat alteration, indiscriminate use of biocides, sacbrood virus disease and traditional honey hunting methods.

To fill in the research gaps on pollination technology, field experiments on the role of *Apis cerana* in enhancing vegetable (radish, cauliflower, cabbage and lettuce) seed production in Kathmandu Valley of Nepal are in progress. So far studies on floral biology and comparative foraging behavior of *Apis cerana* on these crops have been completed. Data on qualitative and quantitative effects of *Apis cerana* pollination on vegetable crops is now being analysed. Distinct advantages of using *Apis cerana* for crop pollination over *Apis mellifera* include early initiation of foraging even at 5°C, longer foraging hours, shorter flight range, low cost of colony maintenance during dearth periods, no competition for forage with other native bee species and non-apis pollinators, coevolution of this bee species with native crops etc.

In the present project, studies on economic and biological characters which affect productivity and pollination activities of *Apis cerana* is being conducted. Prolificness in *Apis cerana* varies from 150-850 eggs per day and brood rearing occurs throughout the year under climatic conditions such as that of Kathmandu valley in Nepal. During dearth periods (monsoon and

winter season) feeding supplementary diet consisting of pollen, yeast and sugar significantly increased prolificness and colony strength. Frequent swarming can be checked by removal of newly constructed queen cells. Colony performance index based on pollen bringing foragers can be successfully used for predicting absconding. Absconding can be overcome through sugar feeding in the dearth periods, provision of shade in hot summer and providing queen gate at the hive entrance. There is recurrence of sacbrood virus disease in Apis cerana colonies throughout its range. In the absence of any effective chemical control measures, a vigorous selection programme for resistance against this disease is being carried out.

This project has been successful in networking the beekeeping research and development activities with concerned institutions/organizations both in ICIMOD countries and outside. The results of present research are benefitting not only the end users but also creating awareness amongst policy makers, planners and administrators about the role of bees and beekeeping for sustainable productivity of farming systems and for the maintenance of biodiversity of natural ecosystems. However, there is a serious concern that scientifically valuable database being developed through morphometric and molecular research may not be of direct use to the farmers unless different identified subspecies/ecotypes are tested at a central location and further genetic improvement of superior genotype made through selection and breeding programme. These selected stocks may then be made available to farmers. Future development and promotion of beekeeping with Apis cerana would therefore depend upon continuing international funding. USAID may consider this point in all seriousness.

AAA Newsletter, 1993

STRATEGIES FOR CONSERVATION OF ASIAN HIVE BEE, *APIS CERANA*

L.R. Verma
International Centre for Integrated Mountain Development (ICIMOD),

Apis cerana is a dominant native bee of South and Southeast Asia and equivalent of European hive bee *Apis mellifera*. This bee species is suffering decline and is threatened with extinction throughout its range. The major threat comes from its replacement with exotic and more prolific *Apis mellifera*, habitat alteration, pesticide poisoning, diseases and enemies particularly recurrence of sacbrood virus disease and human predations especially through traditional honey hunting methods. While the consequence of a decline in *Apis cerana* populations throughout Asia can only be speculated at, it is clear that such decline is undesirable in terms of economic development, maintenance of biodiversity in natural ecosystems and productivity of farming ecosystems. It is, therefore, essential to raise and discuss issues on which a strategy for its conservation can be based for future.

The Amount of *Apis cerana* Genetic Diversity:

The genetic diversity of *Apis mellifera* has been organized into 24 sub-species having varied economic usefulness. These sub-species are adapted to a wide range of ecological conditions and at latitude ranging from 0° at equator to latitude as high as 50°N and 30°S. So far only four sub-species of *Apis cerana* are recognized, although there may be several more because of its wide range of geographic distribution.

Our research group in ICIMOD has successfully identified genetic variance in morphological characters of *Apis cerana* and confirmed the accepted distribution of *A. cerana* sub-species in the Himalayan region. These sub-species have been named as *Apis cerana cerana, Apis cerana himalaya, Apis cerana indica*. According to a survey conducted by bee scientists in China, five different sub-species of *Apis cerana* representing different eco-geographic zones have been identified. These include *Apis cerana cerana, Apis cerana skorikovi, Apis cerana abaensis, Apis cerana hainanensis* and *Apis cerana indica*.

Each sub-species has further locally adapted populations called ecotypes which differ from each other in several biological and economic characters. For example, we have successfully identified three ecotypes of sub-species *Apis cerana himalaya* that correspond to geographic distribution in (1) the Naga and Mizo Hills, (2) Brahmaputra valley and Khasi Hills, and (3) the foothills of the northeast Himalayas. On similar lines, Chinese bee scientists have also classified sub-species *Apis cerana cerana* into 5 ecotypes namely, Guangdong-Guanxi type, Hunan type, Yunnan type, North China type and Changbaishan type. In some parts of Hindu Kush Himalaya, *Apis cerana cerana* matches European hive bee *Apis mellifera* in commercial use value and has spectacular potentials further genetic improvement by selective breeding and molecular research.

Stock Improvement of *Apis cerana*

Many of the above mentioned sub-species/ecotypes of *Apis cerana* are at present not economically viable. Therefore selection and breeding program of superior genotypes to produce a bee suitable for intensive management is required. To achieve stock improvement, different *Apis cerana* subspecies and ecotypes should be accumulated at a central location and superior genotypes be identified by integrating biometric and molecular data with behavioral and economic criteria. Another important pre-requisite for stock improvement is to evolve an efficient queen rearing for *Apis cerana* and also establish isolated mating stations for pure line breeding. The latter is essential because artificial insemination is *Apis cerana* has unexpectedly turned out to be a difficult task due to very low volume of semen ejaculated by drones.

Apiary Management and Behavior Research

During the course of evolution, *Apis cerana* has developed certain behavioral characteristics such as frequent absconding and swarming which are essential for the survival of colonies but undesirable from beekeeping point of view.

Our research group has identified lack of sufficient bee flora, excessive handling, exposure of colonies to summer sunshine and incidence of sacbrood virus disease as major course of absconding. Colony performance index (CPI) based on number of pollen bringing foragers can to a great extent be used for predicting absconding. Based on this criteria, this native bee species starts showing symptoms of absconding even two weeks before and CPI reaches zero even a week before absconding. Management practices like feeding sugar, provision of shade, providing queen gate at the hive entrance significantly reduce absconding. However, colonies affected with sacbrood virus disease show such a severe instinct of absconding that these may leave the hive even without queen bee.

One of the most effective way of reducing frequent swarming is to follow selection program against this undesirable trait and removal of newly constructed queen cells during active swarming season also help to check it considerably.

Currently recurrence of sacbrood virus epidemic after an earlier cycle during 1982-1986 has threatened beekeeping with *Apis cerana* throughout its range and is forcing beekeepers for its replacement by more prolific

BEST AVAILABLE DOCUMENT

27

Apis mellifera. Some colonies are still resistant to this disease and in the absence of any effective chemical control measure, vigorous selection program need to be followed.

Pollination and Biodiversity Concerns

Apis cerana is a vital component of natural ecosystem. Its decline may have serious consequences for various entomophilous plant species. This bee species show distinct advantages over *Apis mellifera* for pollination of agricultural crops. These include longer foraging hours, earlier initiation of foraging activity even at 5° c outside environmental temperature, short flight range, low cost of colony management during dearth periods, no foraging competition with other native bee species and non-apis pollinators, co-evolution of this bee species with native crops, etc.

Keeping in view the above, promotion of beekeeping with *Apis cerana* within a domestic setting appears to be essential for the maintenance of biodiversity of forest and grassland ecosystem and for enhancing the productivity of farming systems.

Unfortunately, in developing countries of South and Southeast Asia, the role of bees and beekeeping as an important biological input for enhancing the yield of agricultural crops has often been underestimated. The sustainable development of mountain agriculture in the twenty first century will therefore necessitate re-orientation of the present crop production technologies. Instead of making substantial use of physical inputs such as chemical fertilizers, biocides, irrigation, heavy machinery, etc., a shift towards biological inputs such as bee cross pollination, biological nitrogen fixation, nutrient uptake, biotechnology, etc. will become essential to increase food productivity. Moreover, such biologically based agriculture will only have positive ecological consequence. Thus, there is a need to create awareness amongst policy makers, planners and aid agencies about promoting bees and beekeeping as an important component of present day strategies for sustainable agriculture and rural development program.

Training and Research Center for Asian Bees and Beekeeping

For future development with *Apis cerana* in South and Southeast Asia, a coordinated and systematic effort by establishing a training and research center for Asian Bee and Beekeeping in this region is essential. This Center should have a continuing internationally funded program in beekeeping training and research with the following mandate, objectives and organization.

Mandate and Objectives

1. The overall objective should be to generate and deliver improved beekeeping management technology through research and training primarily on Asiatic species of honeybees that will contribute to increased production and quality of different hive products (Honey, Beeswax, Royal Jelly, Propolis and Venom) as well as better bee pollination services—principally to the regional needs of south and south-east Asian countries thereby ensuring a good source of income and nutritious food to rural poor communities living at or below subsistence level.
2. To assist different Government agencies, beekeeping communities and commercial enterprises to create a cadre of beekeeping experts by training them in both practical and scientific aspects of beekeeping.
3. To provide information and advisory services and also to act as a coordinating center for international cooperation in beekeeping.
4. To assist different developing countries of this region to establish a national program in beekeeping.

Organization:

The proposed center may have three major programs in beekeeping. i) Research, ii) Training, iii)International Cooperation.

i) Research may be carried out in the following basic and applied areas primarily on Asiatic species of honeybee.

a) Bee Biology
b) Bee Pathology
c) Bee Botany and Pollination
d) Beekeeping Technology and Equipment
e) Beekeeping Economics and Marketing Hive Products
f) Apitherapy

ii) Training courses both in practical and scientific aspects of beekeeping may be offered for the benefit of beekeepers, beekeeping instructors, beekeeping extension personnel from the department of agriculture, forestry and rural development representing different beekeeping communities or association, commercial enterprises and Government departments from the entire region of South and South-east Asia.

iii) International co-optation program will deal with technology sharing and technology transfer for the advancement of beekeeping in this region. It will organize regional training programs, workshops, seminars, conferences and monitoring tours. It will also act as information dissemination center by publishing extension literature for the popularization and promotion of beekeeping, advisory services to individual participating countries and on regional basis also.

AAA Newsletter supplement is published irregularly by Asian Apicultural Association in order to supplement Beekeeping And Development, which is the official news letter of AAA. Editor: Tetsuo Sakai /Assistant Editor: Hitomi Enomoto (Mailing Address: Institute of Honeybee Science, Tamagawa University, Machida-shi, Tokyo 194 Japan)

BEST AVAILABLE DOCUMENT

28

Proc. Int. Entomol. Cong. Beijing,1992

STRATEGIES FOR CONSERVATION OF ASIAN HIVE BEE, APIS CERANA [1]

L.R. Verma

International Centre for Integrated Mountain Development (ICIMOD),
P.O. Box 3226 Kathmandu, Nepal

Apis cerana, is a domesticated native bee of South and Southeast Asia and equivalent of European hive bee Apis mellifera. This bee species is suffering precipitous decline and is threatened with extinction throughout its range. The major threat comes from its replacement with exotic and more prolific Apis mellifera, habitat alteration, pesticide poisoning, diseases and enemies particularly recurrence of sacbrood virus disease and human predations especially through traditional honey hunting methods. While the consequence of a decline in Apis cerana populations throughout Asia can only be speculated at, it is clear that such decline is undesirable in terms of economic development, maintenance of biodiversity in natural ecosystems and productivity of farming ecosystems. It is, therefore, essential to raise and discuss issues on which a strategy for its conservation can be based for future.

The Amount of Apis cerana Genetic Diversity:

The genetic diversity of Apis mellifera has been organised into 24 sub-species having varied economic usefulness. These sub-species are adapted to a wide range of ecological conditions and at latitude ranging from 0^0 at equator to latitude as high as 50^0N and 30^0S. So far only four sub-species of Apis cerana are recognised, although there may be several more because of its wide range of geographic distribution.

One research group in ICIMOD has successfully identified genetic variance in morphological characters of Apis cerana and confirmed the accepted distribution of A. cerana sub-species in the Himalayan region . These sub-species have been named as Apis cerana cerana, Apis cerana himalaya, Apis cerana indica. According to a survey conducted by bee scientists in China, five different sub-species of Apis cerana representing different eco-geographic zones have been identified. These include Apis cerana cerana, Apis cerana skorikovi, Apis cerana abaensis, Apis cerana hainanensis and Apis cerana indica.

Each sub-species has further locally adapted populations called ecotypes which differ from each other in several biological and economic characters. For example, we have successfully identified three ecotypes of sub-species Apis cerana himalaya that correspond to geographic distribution in (1) the Naga and Mizo Hills, (2) Brahmaputra valley and Khasi Hills, and (3) the foothills of the northeast Himalayas. On similar lines, Chinese bee scientists have also classified sub-species Apis cerana cerana into 5 ecotypes namely, Guangdong-Guanxi type, Hunan type, Yunan type, North China type and Changbaishan type. In some parts of Hindu Kush Himalaya, Apis cerana cerana matches European hive bee Apis mellifera in commercial use value and has spectacular potentials for further genetic improvement by selective breeding and molecular research.

BEST AVAILABLE DOCUMENT

[1] Part of this paper was delivered by the author as chairperson and Organisor of Symposium entitled Apis cerana and other honeybees of Apidae during XIX International Congress of Entomology, Beijing, China, 1992.

Stock Improvement of Apis cerana

Many of the above mentioned sub-species/ecotypes of Apis cerana are at present not economically viable. Therefore selection and breeding programme of superior genotypes to produce a bee suitable for intensive management is required. To achieve stock improvement, different Apis cerana sub-species and ecotypes should be accumulated at a central location and superior genotypes be identified by integrating biometric and molecular data with behavioral and economic criterias. Another important pre-requisite for stock improvement is to evolve an efficient queen rearing for Apis cerana and also establish isolated mating stations for pure line breeding. The latter is essential because artificial insemination in Apis cerana has unexpectedly turned out to be a difficult task due to very low volume of semen ejaculated by drones.

Apiary Management and Behaviour Research

During the course of evolution, Apis cerana has developed certain behavioural characteristics such as frequent absconding and swarming which are essential for the survival of colonies but undesirable from beekeeping point of view.

Our research group has identified lack of sufficient bee flora, excessive handling, exposure of colonies to summer sunshine and incidence of sacbrood virus disease as major causes of absconding. Colony performance index (CPI) based on number of pollen bringing foragers can to a great extent be used for predicting absconding. Based on this criteria, this native bee species start showing symptoms of absconding even two weeks before and CPI reaches zero even a week before absconding. Management practices like feeding sugar, provision of shade, providing queen gate at the hive entrance significantly reduce absconding. However, colonies affected with sacbrood virus disease show such a severe instinct of absconding that these may leave the hive even without queen bee.

One of the most effective way of reducing frequent swarming is to follow selection programme against this undesirable trait and removal of newly constructed queen cells during active swarming season also help to check it considerably.

Currently recurrence of sacbrood virus epidemic after an earlier cycle during 1982-1986 has threatened beekeeping with Apis cerana throughout its range and is forcing beekeepers for its replacement by more prolific Apis mellifera. Some colonies are still resistant to this disease and in the absence of any effective chemical control measures, vigorous selection programme need to be followed.

Pollination and Biodiversity Concerns

Apis cerana is a vital component of natural ecosystem. Its decline may have serious consequences for various entomophilous plant species. This bee species show distinct advantages over Apis mellifera for pollination of agricultural crops. These include longer foraging hours, earlier initiation of foraging activity even at 5°C outside environmental temperature, short flight range, low cost of colony management during dearth periods, no foraging competition with other native bee species and non-apis pollinators, co-evolution of this bee species with native crops etc.

Keeping in view the above, promotion of bee keeping with Apis cerana within a domestic setting appears to be essential for the maintenance of biodiversity of forest and grassland ecosystem and for enhancing the productivity of farming systems.

Unfortunately, in developing countries of south and southeast Asia, the role of bees and beekeeping

ICIMOD

BEST AVAILABLE DOCUMENT

as an important biological input for enhancing the yield of agricultural crops has often been underestimated. The sustainable development of mountain agriculture in the twenty first century will therefore necessitate reorientation of the present crop production technologies. Instead of making substantial use of physical inputs such as chemical fertilizers, biocides, irrigation, heavy machinery etc, a shift towards biological inputs such as bee cross pollination, biological nitrogen fixation, nutrient uptake, biotechnology etc. will become essential to increase food productivity. Moreover, such biological based agriculture will only have positive ecological consequences. Thus, there is a need to create awareness amongst policy makers, planners and aid agencies about promoting bees and beekeeping as an important component of present day strategies for sustainable agriculture and rural development programme.

Training and Research Centre for Asian Bees and Beekeeping

For future development of beekeeping with Apis cerana in South and Southeast Asia, a coordinated and systematic effort by establishing a training and research centre for Asian Bee and Beekeeping in this region is essential. This Centre should have a continuing internationally funded programme in beekeeping training and research with the following mandate, objectives and organisation

Mandate and Objectives

1. The overall objective should be to generate and deliver improved beekeeping management technology through research and training primarily on Asiatic species of honeybees that will contribute to increased production and quality of different hive products (Honey, Beewax, Royal Jelly, Propolis and Venom) as well as better bee pollination services-principally to the regional needs of south and south-east Asian countries thereby ensuring a good source of income and nutritious food to rural poor communities living at or below subsistence level.

2. To assist different Government agencies, beekeeping communities and commercial enterprises to create a cadre of beekeeping experts by training them in both practical and scientific aspects of beekeeping.

3. To provide information and advisory services and also to act as a co-ordinating centre for international co-operation in beekeeping.

4. To assist different developing countries of this region to establish a national programme in beekeeping.

Organisation

The proposed centre may have three major programmes in beekeeping.

i) Research
ii) Training
iii) International Co-operation

Research may be carried out in the following basic and applied areas primarily on Asiatic species of honeybee.

a) Bee Biology
b) Bee Pathology
c) Bee Botany and Pollination
d) Beekeeping Technology and Equipment
e) Beekeeping Economics and Marketing Hive Products
f) Apitherapy

BEST AVAILABLE DOCUMENT

Training courses both in practical and scientific aspects of beekeeping may be offered for the benefit of beekeepers, beekeeping instructors, beekeeping extension personnel from the department of agriculture, forestry and rural development representing different beekeeping communities or associations, commercial enterprises and Government departments from the entire region of south and south-east Asia.

International co-operation programme will deal with technology sharing and technology transfer for the advancement of beekeeping in this region. It will organise regional training programmes, workshops, seminars, conferences and monitoring tours. It will also act as information dissemination centre by publishing extension literature for the popularization and promotion of beekeeping, advisory services to individual participating countries and on regional basis also.

All the above programmes will be carried out by keeping continuing contracts with national and international agencies.

BEST AVAILABLE DOCUMENT

Acknowledgements

This research was supported under grant No. 367-5600-55-1147-001, Programme in Science and Technology Cooperation, office of the Science Advisor, U.S. Agency for International Development.

MS # 7

Apidologie 25: 1-21, 1994

Multivariate morphometrics of the Indian Honeybee in the Northwest Himalayan Region

by

L. R. Verma[1], V. K. Mattu[1], and Howell V. Daly[2]

[1]Department of Bio-Sciences, H. P. University, Shimla, India

[2]Department of Entomological Sciences, University of California, Berkeley, California, U.S.A. 94720

Address for all correspondence:

Howell V. Daly
201 Wellman Hall
Department of Entomological Sciences
University of California
Berkeley, California, U.S.A. 94720
FAX 510 642-7428

Summary

Multivariate statistical analyses of 55 morphometric characters were made for collections of *Apis cerana* from 29 localities in the Himachal Pradesh and Jammu and Kashmir states of the northwest Himalayas. Two distinct biometric groups were observed after discriminant function analysis and cluster analysis. The groups were associated with differences in the climates of the Himachal and Kashmir regions. Previous observations were confirmed that some characters were associated with altitude and rainfall such that bees were larger and darker at higher altitudes and lower rainfall. The phenetic clustering of samples within each region corresponded in general to physiography. Principal components analysis indicated minimal contributions of general size components to overall covariation in each of the regions.

Keywords (11):

Apidae, Apis cerana, honeybee, India, Himalayas, Himachal Pradesh, Kashmir, morphometrics, discriminant function analysis, principal components analysis, geographic variation

BEST AVAILABLE DOCUMENT

Introduction

The Eastern Honeybee, *Apis cerana* Fabricius, occupies a distribution extending from Afghanistan to Japan and thence southeast in Asia to the Wallace Line. This study is focused on collections made at 20 localities in the Himachal region (state of Himachal Pradesh) and Kashmir region (state of Jammu and Kashmir) of the northwest Himalayan Region (see map in Mattu and Verma, 1983). Univariate analyses of bees from these collections have been published and provide additional information (Mattu and Verma, 1983, 1984a, 1984b; Verma and Mattu, 1982; Verma *et al.*, 1984). In this study, certain univariate analyses are re-examined by analysis of variance (ANOVA) and summarized, and multivariate discriminant function analysis (DFA) and principal components analysis (PCA) are performed.

Materials and Methods:

Collections of worker bees were made from 4 to 5 wild colonies at each of 20 localities. The total number of bees from each locality and other information are given in Table 1 (see also Mattu and Verma, 1983). The 55 characters were those for which univariate analyses were previously reported by Mattu and Verma (1983, 1984a, 1984b). Code numbers for the characters and brief descriptions of the measurements are provided in Table 2.

Computations were performed on an IBM 3090 computer at the University of California, Berkeley. For the discriminant analyses the programs DISCRIMINANT (prior probabilities equal; minimum

BEST AVAILABLE DOCUMENT

tolerance in stepwise procedure was 0.001) and FACTOR from the Statistical Package for the Social Sciences (Norusis 1985) was used. The program NTSYS-PC (Rohlf 1987) was used to perform unweighted pair-group cluster analyses with arithmetic averages (UPGMA) as described by Sneath and Sokal (1973). All other computations were made with special programs written by HVD and performed on an IBM-AT personal computer.

The statistical analyses were performed in four phases in a manner similar to that described by Singh *et al.* (1990). The purpose of the first phase was to make an initial DFA of the 20 localities to determine how the collections of bees from the 20 localities could be clustered into a smaller number of groups. The measurements of all characters for the collections were grouped by locality and entered as 20 groups in a DFA. The program included a univariate ANOVA for each character over the 20 groups. The extent to which the DFA discriminated among the localities was evaluated by reclassifying the 1184 individual bees with the coefficients from the analysis. Each bee was assigned to the group for which the bee had the highest probability of membership. With 20 groups of equal prior probability, 5% could be correctly classified by chance alone.

The mean value of each character at each locality was then used to compute the coordinates of the centroids for each locality with respect to the 19 canonical discriminant functions. From the coordinates, the square roots of the Euclidean distances between each pair of localities were computed. The smaller the distance, the more

BEST AVAILABLE DOCUMENT

similar are the biometries of the bees collected at two localities. Hierarchic UPGMA cluster analysis was made of the Euclidean distances among the 20 localities (Sneath and Sokal, 1973). On this basis, two major biometric groups were recognized.

The purpose of the second phase of analyses was to evaluate the discrimination between the two major biometric groups using all 55 characters. The measurements for the collections were regrouped into the two biometric groups and entered in a second series of DFA's. ANOVA for each character was performed again, now for the two groups. Two DFA methods were used: the "direct" method in which all characters were included and the "stepwise with Wilks criterion" method in which certain characters were automatically eliminated if they failed to meet certain critical values. The discrimination between the groups was evaluated by reclassifying each bee into one of the two biometric groups. With two groups of equal prior probability, 50% of the bees could be correctly classified by chance alone. Finally, the odd numbered samples were held as a test set and only the even numbered samples were used as data for the DFA. Then all samples were classified into the two groups. Next, the even numbered samples were held as a test set and so forth. The classification of the test sets in each case provided further evidence of the effectiveness of discrimination.

The purpose of the third phase of the analyses was to evaluate the contributions of the different characters to the discrimination of the two biometric groups. This was done by two methods: (1) by

BEST AVAILABLE DOCUMENT

ranking of the absolute values of the standardized discriminant function coefficients, and (2) ranking the absolute values of the correlations of the 55 characters with the single discriminant function. As a result of these comparisons, a reduced number of characters was selected to provide a quick method for identification of the biometric groups. The final choice was supported by the procedure described above where odd or even samples were held as test sets. ANOVA's were also made for the 55 characters within each biometric group to examine the differences in the characters within the two groups.

The purposes of the fourth phase were (1) to determine the relationships of the morphometric characters to altitude and rainfall and (2) to determine the contribution of a general size component to overall variation within each biometric group. First, univariate product-moment correlations ("r") were computed for altitude and rainfall at the localities (Table 1) versus the values of the 55 morphometric characters for individual bees. Second, a PCA was performed with altitude and rainfall included as variables with the 55 characters for individual bees. Because the two biometric groups were so different, the computations of correlations and PCA were carried out within each biometric group rather than overall.

Results

Discriminant analysis

In the first phase, the initial DFA indicated that a majority of the bees from each of the 20 localities were closer to other bees from the

BEST AVAILABLE DOCUMENT

same locality than to bees from other localities when placed in a 19 dimensional morphometric space. This was shown by the reclassification of the individual bees into the 20 groups by two DFA's using different procedures. The direct method, where all 55 characters were included, gave an overall average of 61.15% of bees correctly classified and the stepwise method gave 61.23% correctly classified. The univariate ANOVA indicated that 48 of the 55 characters over all 20 localities were highly significant (significance probability < 0.001; see Table 6 for list).

The biometric relationships of the bees from the 20 localities are shown in the phenogram (fig. 1). Two distinct groups are evident: samples 51 to 62 from Himachal region form one biometric group, and samples 63 to 70 from Kashmir region form a second biometric group. The two biometric groups are so distinct that clearer pictures of the three-dimensional relationships of the samples in each region are best shown in separate illustrations (fig. 2).

The second phase was a DFA of the two biometric groups with all 55 characters. When all samples were entered as data, the overall classification rate was 99.9% regardless of whether all 55 characters were used in the direct method or just the 39 characters selected by the stepwise procedure were used. Because the two methods gave essentially the same result, we provide here the statistics from the direct method: unstandardized coefficients for use with raw measurements and standardized coefficients for use with standardized measurements (Table 4; see Table 3 for total means and standard

BEST AVAILABLE DOCUMENT

localitions). The ANOVA of the two groups gave highly significant F values for 43 of the 55 characters (significance probability < 0.001, see Table 5 for list).

In the third phase, the characters with standardized discriminant coefficients of absolute value > 0.35 (an arbitrarily chosen value) on the single function were characters 48, 25 and 46. These characters also had correlations with the function of absolute value > .33 (see Table 4). When only characters 48 and 25 were used in a DFA between the biometric groups and all bees were included as data, the overall percentage of correct classification was 99.9%. When samples were split into test and data sets, the percentages of correct classifications for the data sets were 100% (even numbered localities) and 99.8% (odd numbered localities). For the corresponding test sets, 99.8% and 100%, respectively. Table 5 provides statistics for a quick classification of new samples with only two characters. When classification of new samples into the two biometric groups is critical, then the use of all 55 measurements is recommended.

Variation and correlation of characters

The several ANOVA's that were performed for different groupings of the data indicate that forewing characters 10 and 14, tongue characters 34-36, and antenna character 53 were not different among the samples or groups, while forewing characters 2, 4, 7, 8, and 17, hind wing character 29, and abdomen character 41 consistently differed between the regions and among the samples within each region (Table 6). ANOVA's within each region indicated

BEST AVAILABLE DOCUMENT

that 31 characters of bees of the Himachal region and 16 characters of bees from the Kashmir region were different among the samples. Bees within the latter region, therefore, exhibited the least differences among the samples.

The correlations of rainfall and altitude with morphometrics of individual bees were examined separately within each region by univariate and multivariate analysis (Tables 6, 7). A univariate correlation existed between rainfall versus altitude among localities of the Himachal region (r= -0.38, significance probability = 0.00), but no correlation existed among the localities of Kashmir region (r = 0.02, significance probability = 0.33). These relationships also appeared in the PCAs where altitude and rainfall jointly contributed strongly to PC1 in the analysis of the Himachal region, but were unrelated and divided in their contributions to PC1-PC3 in the analysis of the Kashmir region (Table 7).

For bees of the Himachal region, 35 morphometric characters had significant correlations with altitude (two-tailed significance probability < 0.01). All but two of these were positive. The highest correlations (> 0.3, an arbitrary value) were found for forewing characters 2 and 5; hindwing character 24; hind leg character 30; and abdomen characters 41, 50, and 51. Fifteen characters had significant, negative correlations with rainfall of which abdomen characters 41 and 50 were < -0.17.

BEST AVAILABLE DOCUMENT

For bees of the Kashmir region, 28 characters were correlated with altitude, all but three were positive. Among the highest were forewing character 7 and hind wing character 26 at > 0.29. Seven characters were correlated with rainfall, of which five were negative. Forewing character 6 and abdomen character 47 were highest at < -0.18.

In summary, most correlations with altitude and rainfall within a region were found in wing, leg, and abdomen characters, while relatively few were found among tongue and antenna characters. Most correlations with altitude were positive and most with rainfall were negative. In other words, higher altitude and lower rainfall were correlated with larger size within each region. Twenty-two characters were consistently correlated with altitude in both groups, but only character 4 was correlated with rainfall in both groups.

As observed previously, bees of the Kashmir region are larger in length and width measurements than those of the Himachal region (Mattu and Verma, 1983, 1984a, 1984b). This was confirmed by comparing the means of the characters (Table 3) after excluding characters 9-19 which are angles and characters 10, 14, 18, 21, 26, 34, 35, 36, 43, and 53 which are not significantly different between the groups. The exceptional characters were 38, 40, and 48, where on the average, bees of the Himachal region are larger.

The PCA's of morphometrics within each region (Table 7) shared certain features in common: about 4% of the variation was

BEST AVAILABLE DOCUMENT

accounted for by PC1 in each analysis, and < 2% was accounted for by each of the remaining components. As a result, the cumulative percentages of variances explained by components 1-23 were only 55.9% - 55.9%. Altitude had the highest correlations of all variables with PC1. Morphometric variables that had higher correlations with PC1 in both analyses were forewing characters 1, 5 and 29; hind leg characters 30 and 31; and abdomen character 41. Otherwise, the two PCA's shared little in common with regard to the distribution of the higher correlations among the components.

Discussion

Two major biometric clusters emerged when all twenty samples were analyzed in a single DFA (fig. 1). The eight samples from the Kashmir region formed one biometric group and the twelve samples from Himachal region formed the second group. The morphometric "gap" between the groups was quite distinct. Samples from localities along the boundary between the regions did not appear to form a transitional cline. For example, bees from sample 63 (Table 1) taken at a lower elevation in western Kashmir region did not cluster with bees taken at lower elevations in the western Himachal region. Vice versa, bees from sample 58 taken at a higher elevation in the northern Himachal region did not cluster with bees from sample 64, also taken at a high elevation, in the southern Kashmir region. The overall lack of similarity in the distribution of correlations with the first three principal components of morphometric covariation in each region is further evidence of the difference between bees in the two regions.

BEST AVAILABLE DOCUMENT

Although no striking physiographic feature separates these regions, a major climatic boundary does coincide with the political boundary between the states. The rainfall statistics alone do not reveal this climate difference (Table). However, based on precipitation effectiveness (total monthly precipitation divided by total monthly evaporation), the climate classification of Takahashi and Arakawa (1951) shows the collection sites of the Kashmir region are in a zone of dry sub-humid climate while those of the Himachal region are in zones of moist sub-humid or humid climates. Analysis of future collections along this climatic boundary will be necessary to discover where the transition from one biometric type to the other occurs or if the two groups coexist sympatrically. In the latter case, an appropriate taxonomic action would be in order.

The two biometric groups were distinguished by significant differences in 45 of the 55 characters. Bees of the Kashmir region were larger on the average than those of the Himachal region in most length and breadth measurements; exceptions were characters 38 (length of postmentum) and 48 (length of wax mirror on 3rd sternite) in which bees of the Kashmir region are smaller. Bees of the Kashmir region also had wider bands of dark color on the third and fourth terga and a narrower light band on the third tergite. However, the characters of the tongue were complex: length and breadth of prementum and total tongue length were not different between the groups. length of labial palp and glossa were larger in the Kashmir region, while length of the postmentum was smaller in the Kashmir region.

BEST AVAILABLE DOCUMENT

Within each region, correlations also existed between morphometric characters and altitude and rainfall. Larger size in a majority of length and breadth measurements was associated with higher altitude and lower rainfall. These results agree in general with previous analyses, but differ in some details because of differing computational procedures (Mattu and Verma, 1983, 1984a, 1984b; Verma and Mattu, 1982, Verma et al., 1984). Except for the correlations with altitude, and to a lesser extent with rainfall, covariation among the morphometric characters themselves as revealed by PCA was remarkably low. This resulted in a minimal contribution of "general size" to the overall covariation among the samples within each region. The first component usually accounts for a much larger percentage of variance in morphometric studies (Daly, 1992).

Within each biometric group, clusters of samples in morphometric space were often, but not always, close to each other geographically. In the Kashmir region, a close correspondence existed between the minor clusters (fig. 1) and physiographic features: sample 68 from the Kishangana Valley, sample 69 from the Sindh Valley, and sample 70 from the Drass Valley, are all from contiguous river valleys at altitudes above 2300 m. Another cluster of samples 65, 66, and 67 was taken in the Kashmir Valley, just to the south of the first cluster and at altitudes of 1700-2000 m. All six samples were united in a larger cluster at phenon 5 and all were taken north of the Pan Panjal Range which produces a modified monsoon climate.

BEST AVAILABLE DOCUMENT

4/6

Samples 63 and 64 were isolated morphometrically and the collection sites were separated geographically. However, these two sites share in common lower altitudes and the normal monsoon climate which prevails south of the Pir Panjal Range and in the Chenab River Valley that penetrates the range.

In the Himachal region, most samples in the minor clusters can be related to physiography and the geographic proximity of morphometrically related samples, but some samples can not. The cluster of samples 59, 60, 61, and 62 were taken from a zone of humid climate, dominated by the Sutlej River valley, and stretching from Simla to the Kinnaur region. The remaining samples of Himachal region were from the moist sub-humid zone or along the its boundary with the humid zone. The cluster of samples 52, 53, 55, and 56 were taken in the region of the Beas River and limited on the north by the Dhaula Dhar Range. An exception was sample 54 which was morphometrically close to sample 56, but was taken much farther south. Likewise, samples 57 and 58 were clustered morphometrically, but were not close geographically. Finally, sample 51, isolated from other samples morphometrically, was taken at the lowest altitude.

BEST AVAILABLE DOCUMENT

References

Daly, H V (1992) A statistical and empirical evaluation of some morphometric variables in honey bee classification. In Sorensen, J T, Footitt, R (eds) *Orientation in the study of morphology, evolution and systematics of insects: applications and quantitative genetic rationals*: Elsevier: Amsterdam, Netherlands: pp. 127-155.

Mattu, V K, Verma, L R (1983) Comparative morphometric studies on the Indian honeybee of the North-west Himalayas 1. Tongue and Antenna. *Journal of Apicultural Research* 22(2):79-85.

Mattu, V K, Verma, L R (1984a) Comparative morphometric studies on the Indian honeybee of the North-west Himalayas 2. Wings. *Journal of Apicultural Research* 23(1):3-10.

Mattu, V K; Verma, L R (1984b) Comparative morphometric studies on the Indian honeybee of the North-west Himalayas 3. Hind leg, tergites and sternites. *Journal of Apicultural Research* 23(3):117-122.

Norusis, M J (1985) *SPSS^X: Advanced statistics guide*. McGraw-Hill Book Company: New York: 505 pp.

BEST AVAILABLE DOCUMENT

Rohlf, F J (1987) *Numerical taxonomy and multivariate analysis system for the IBM PC microcomputer and compatibles.* Applied Biostatistics, Inc Setauket, New York. 36 pp.

Ruttner, F (1988) *Biogeography and taxonomy of honeybees.* Springer-Verlag: Berlin, Germany: 284 pp.

Singh, M P; Verma, L R; Daly, H V (1990) Morphometric analysis of the Indian honeybee in the northeast Himalayan region. *Journal of Apicultural Research* 29 3-14.

Sneath, P H A; Sokal, R R (1973) *Numerical Taxonomy.* W H Freeman and Company: San Francisco: 573 pp.

Takahashi, K; Arakawa, H (1981) *Climates of Southern and Western Asia.* *In* Landsberg, H E (ed) *World Survey of Climatology,* vol 9. Elsevier Scientific Publishing Company: Amsterdam, Netherlands: 333 pp.

Verma, L R; Mattu, V K (1982) Ecotypes studies on Apis cerana F. In Breed, M D; Michener, C D; Evans, M E (eds) *Biology of Social Insects.* West View Press: Boulder, Colorado: p. 413.

Verma, L R; Mattu, V K; Singh, M P (1984) Races of Indian honeybee in Himalaya. *Proceedings of the 15th International Congress of Entomology,* Hamburg, F R G; p. 508.

BEST AVAILABLE DOCUMENT

Acknowledgements

This research was supported under grant No. 367-5600-55-1147-001, Programme in Science and Technology Cooperation, office of the Science Advisor, U.S. Agency for International Development.

Table 1. Code numbers and collection localities, geographic coordinates, altitude in meters (Alt), rainfall in millimeters (Rain), climatic classification of Takahashi and Arakawa (1981) (Clim. B = humid, C_1 = dry sub-humid, C_2 = moist sub-humid, w = rainfall deficient in winter, s = rainfall deficient in summer), and total number of bees collected from 4-5 wild colonies at each site (Bees)

Code	Locality	Latitude	Longitude	Alt	Rain	Clim	Bees
Biometric group of Himachal Region							
51	Bilaspur	31° 15 N	76° 40 E	587	1022	Bw/C_2w	60
52	Kangra	32° 05 N	76° 16 E	700	1623	C_2w	60
53	Mandi	31° 43 N	76° 50 E	761	1388	Bw/C_2w	60
54	Nahan(Sirmori)	30° 33 N	77° 21 E	905	2221	C_2w/C_1s	60
55	Bharari(Hamirpuri)	31° 23 N	76° 34 E	1007	1812	C_2w	60
56	Kairain(Kullu)	32° 05 N	77° 08 E	1463	789	Bw/C_2w	60
57	Solan	30° 50 N	77° 08 E	1530	1187	Bw/C_2w	60
58	Dalhousi(Chamba)	32° 32 N	75° 58 E	2036	2140	C_2w	60
59	Shimla(Simla)	31° 07 N	77° 10 E	2206	1625	Bw	60
60	Bagi (Shimla)	31° 15 N	77° 27 E	2648	1518	Bw	60
61	Poo (Kinnaur)	31° 40 N	78° 34 E	2837	368	Bw	60
62	Roghi(Kinnaur)	31° 32 N	78° 15 E	3017	749	Bw	60
Biometric group of Kashmir region:							
63	Rajouri	33° 23 N	74° 21 E	938	1354	C_1w	60

BEST AVAILABLE DOCUMENT

[illegible]	[illegible]	33° [illegible] N	[illegible] 48 E	1664	297	[illegible]	60
[illegible]	[illegible]	34° [illegible] N	74° 50 E	1768	[illegible]	[illegible]	60
[illegible]	[illegible]	34° 31 N	74° 16 E	1811	[illegible]	[illegible]	60
[illegible]	[illegible]	33° 56 N	75° 10 E	2007	[illegible]	[illegible]	60
[illegible]	[illegible] Baramulai	34° 35 N	74° 53 E	2364	555	[illegible]	60
[illegible]	Sonamarg:Srinagar)	34° 15 N	75° 21 E	2740	1515	[illegible]	60
70	Dras:Kargil	34° 26 N	75° 49 E	2977	500	[illegible]	44

BEST AVAILABLE DOCUMENT

Table 2. Code numbers for characters and brief descriptions of the measurements. Tergites and sternites are counted posterior to petiole, i.e., as metasomal segments. Abbreviations refer to labels in illustrations of Mattu and Verma (1984a,b).

Forewing:

1 Length of radial cell (RcL)
2 Breadth of radial cell (RcB)
3 Length of basal portion of radial cell (RcL_1)
4 Length of apical portion of radial cell (RcL_2)
5 Length of forewing (FwL)
6 Breadth of forewing (FwB)
7 Length of 1st abscissa of vein M_{3+4} in 2nd median cell (a)
8 Length of 2nd abscissa of vein M_{3+4} in 2nd median cell (b)
9 Angle 31 of forewing
10 Angle 32
11 Angle 33
12 Angle 34
13 Angle 35
14 Angle 36
15 Angle 37
16 Angle 38
17 Angle 39
18 Angle 40
19 Angle 41

BEST AVAILABLE DOCUMENT

Hind wing

20 Length of basal portion of radial vein (RL)

21 Length of apical portion of radial vein (ML)

22 Length of discoidal vein (VL)

23 Length of indica vein (IL)

24 Breadth of hind wing (HwB)

25 Length of hind wing (HwL)

26 Number of hamuli (NH)

27 Extent of hamuli (EH)

28 Length of jugal lobe (JL)

29 Length of vannal lobe (VL)

Hind leg

30 Length of femur

31 Length of tibia

32 Length of metatarsus

33 Breadth of metatarsus

Tongue

34 Length of prementum

35 Breadth of prementum

36 Total tongue length

37 Length of labial palp

BEST AVAILABLE DOCUMENT

38 Length of postmentum

39 Length of glossa

Abdomen (metasoma)

40 Length of light band of 3rd tergite

41 Length of dark band of 3rd tergite

42 Total length of 3rd tergite

43 Length of light band of 4th tergite

44 Length of dark band of 4th tergite

45 Total length of 4th tergite

46 Breadth of wax mirror on 3rd sternite (WmB)

47 Distance between wax mirrors on 3rd sternite (WmD)

48 Length of wax mirror on 3rd sternite (WmL)

49 Total length of 3rd sternite (S3)

50 Length or depth of 6th sternite (L6)

51 Breadth of 6th sternite (B6)

Antenna

52 Length of scape

53 Length of pedicel

54 Length of flagellum

55 Total length of antenna

BEST AVAILABLE DOCUMENT

Table 3. Means and standard errors for the 55 characters for each of the two biometric groups; means and standard deviations for the total sample. n, sample size

Group	Himachal region		Kashmir region		Total	
n =	720		464		1184	
	Mean	SE	Mean	SE	Mean	SD
Character						
1	3.012	0.0024	3.181	0.0038	3.078	0.1089
2	0.403	0.0009	0.423	0.0012	0.411	0.0270
3	1.198	0.0022	1.247	0.0021	1.217	0.0586
4	1.850	0.0027	1.946	0.0031	1.888	0.0842
5	8.498	0.0053	8.748	0.0071	8.596	0.1907
6	2.847	0.0028	3.064	0.0034	2.932	0.1292
7	0.537	0.0013	0.566	0.0017	0.548	0.0389
8	0.143	0.0008	0.157	0.0011	0.148	0.0242
9	32.182	0.0594	32.821	0.1124	32.432	1.9844
10	107.499	0.1942	107.670	0.1811	107.566	4.7396
11	93.778	0.1803	95.667	0.1757	94.518	4.5482
12	19.261	0.0561	17.848	0.0935	18.707	1.8551
13	88.365	0.1043	90.539	0.1344	89.217	3.0275
14	43.472	0.1484	43.229	0.1690	43.377	3.8521
15	98.174	0.1883	96.931	0.2171	97.687	4.9434
16	82.333	0.1395	81.065	0.1736	81.836	3.7913
17	15.035	0.0621	13.011	0.0718	14.242	1.8974

DOCUMENT

18	74.622	0.1811	75.519	0.2090	74.974	4.7404
19	31.332	0.0997	32.603	0.2643	31.830	4.1736
20	1.440	0.0027	1.480	0.0024	1.456	0.0687
21	1.221	0.0028	1.221	0.0033	1.221	0.0737
22	1.196	0.0028	1.265	0.0038	1.223	0.0840
23	0.386	0.0027	0.427	0.0036	0.402	0.0775
24	1.653	0.0022	1.752	0.0026	1.692	0.0755
25	5.791	0.0056	6.420	0.0066	6.037	0.3405
26	19.360	0.0729	19.438	0.1008	19.390	2.0426
27	1.241	0.0023	1.296	0.0029	1.262	0.0682
28	1.748	0.0035	1.823	0.0052	1.778	0.1088
29	1.204	0.0025	1.236	0.0029	1.216	0.0680
30	2.468	0.0019	2.581	0.0035	2.512	0.0828
31	3.094	0.0028	3.208	0.0035	3.139	0.0938
32	1.941	0.0026	2.006	0.0039	1.967	0.0814
33	1.086	0.0012	1.105	0.0029	1.093	0.0476
34	1.313	0.0049	1.321	0.0060	1.316	0.1311
35	0.782	0.0018	0.786	0.0025	0.784	0.0508
36	5.307	0.0197	5.348	0.0247	5.323	0.5307
37	2.552	0.0050	2.751	0.0120	2.630	0.2157
38	0.302	0.0011	0.273	0.0017	0.291	0.0360
39	2.776	0.0127	2.848	0.0157	2.804	0.3422
40	1.028	0.0056	0.954	0.0077	0.999	0.1609
41	0.781	0.0054	0.967	0.0055	0.854	0.1633
42	1.977	0.0035	2.096	0.0023	2.024	0.0984
43	0.657	0.0029	0.663	0.0043	0.659	0.0835
44	1.097	0.0032	1.204	0.0040	1.139	0.1007

BEST AVAILABLE DOCUMENT

45	1.589	0.0021	2.060	0.0038	1.962	0.1045
46	2.093	0.0031	2.274	0.0029	2.199	0.1525
47	0.219	0.0020	0.317	0.0025	0.252	0.0744
48	1.529	0.0018	1.243	0.0032	1.412	0.1470
49	2.429	0.0027	2.599	0.0028	2.495	0.1076
50	2.325	0.0029	2.399	0.0042	2.354	0.0915
51	2.589	0.0036	2.906	0.0053	2.714	0.1860
52	1.079	0.0036	1.244	0.0039	1.144	0.1224
53	0.225	0.0030	0.237	0.0012	0.237	0.0642
54	2.536	0.0030	2.720	0.0034	2.605	0.1183
55	4.109	0.0036	4.310	0.0035	4.188	0.1327

BEST AVAILABLE DOCUMENT

Table 4. Left three columns are character codes and unstandardized and standardized discriminant function coefficients for the two biometric groups using all 55 characters. The values of the function at the group means are -4.2196 for the Himachal region and 6.5480 for the Kashmir region. Right two columns are character codes and pooled within-group correlations between the canonical discriminant function and the characters, ranked by the magnitude of the correlation.

	Unstandardized	Standardized		Correlations
Character		Characters		
1	2.645270	0.18796	48	-0.45660
2	-1.703572	-0.04302	25	0.39747
3	0.5321126	0.02851	46	0.33634
4	0.3717739	0.02595	51	0.28480
5	0.5344067	0.07833	6	0.27139
6	3.595537	0.26652	49	0.23174
7	0.3461549	0.01251	54	0.22096
8	0.9489423	0.02204	1	0.22086
9	-0.03228633	-0.06330	45	0.21946
10	-0.002033616	-0.00964	55	0.20830
11	0.005976942	0.02663	47	0.18628
12	-0.06439338	-0.11092	30	0.16939
13	0.009580180	0.02717	52	0.16542
14	-0.01872391	-0.07212	5	0.15842

BEST AVAILABLE DOCUMENT

15	0.01755775	0.08617	24	0.15745
16	0.02991329	0.11193	42	0.13975
17	0.07899209	0.12799	31	0.13944
18	0.004935637	0.02331	4	0.12562
19	0.004977721	0.02055	41	0.12764
20	-0.1489012	-0.00979	17	-0.11601
21	-1.361788	-0.10033	44	0.11495
22	0.3238104	0.02491	37	0.09588
23	0.03476011	0.00260	3	0.08394
24	1.302947	0.07577	22	0.08337
25	2.440815	0.35866	50	0.08189
26	-0.03021339	-0.06173	38	-0.08171
27	0.8349808	0.05237	27	0.08137
28	-0.1195768	-0.01226	32	0.08006
29	-0.3859466	-0.02554	12	-0.07620
30	0.6083928	0.03760	7	0.07586
31	1.515922	0.11469	2	0.07243
32	0.2642043	0.01982	13	0.07116
33	-0.7396157	-0.03454	28	0.06812
34	-0.5542313	-0.07264	8	0.05737
35	-0.8156806	-0.04146	20	0.05712
36	-0.09663903	-0.05128	23	0.05119
37	0.5239620	0.10097	29	0.04543
38	-6.485288	-0.21451	40	-0.04359
39	0.1263396	0.04302	11	0.03937
40	-0.4190776	-0.06575	33	0.03891

BEST AVAILABLE DOCUMENT

41	0.1547772	0.02399	56	-0.03149
42	0.4589282	0.03641	4	0.03028
43	-0.9228163	0.07706	19	0.02860
44	-0.1136027	-0.00980	15	-0.02351
45	3.089292	0.21145	39	0.01963
46	4.704503	0.35313	18	0.01764
47	3.799122	0.20204	35	0.00723
48	-8.540549	-0.48283	36	0.00705
49	2.885044	0.19703	43	0.00691
50	-0.4497991	-0.03782	14	-0.00586
51	1.111705	0.11482	34	0.00542
52	2.177542	0.20113	26	0.00354
53	0.5788697	0.03718	10	0.00336
54	3.235728	0.24982	53	-0.00157
55	1.763641	0.15781	21	0.00032

Constant -70.46841

BEST AVAILABLE DOCUMENT

Table 5. Left three columns are character codes, unstandardized and standardized canonical discriminant function coefficients for the groups based on the best two variables. The values of the function at the group means are 2.53074 for the Himachal region and -3.927 for the Kashmir region. Right column is pooled within-group correlations between the canonical discriminant functions and the characters.

		Unstandardized	Standardized	Correlations
Character	25	-4.413023	-0.64847	-0.66275
	48	13.24839	0.74898	0.76134
Constant		7.942608		

BEST AVAILABLE DOCUMENT

Table 6. Univariate ANOVAs and correlations of each of 55 characters. At left are character codes from Table 2. Univariate F-ratio significance probabilities (FSIG) indicated by "-" = > 0.001 i.e., not significant, and by "•" = < 0.001 i.e., significant. For the ANOVA of 20 groups, (2) ANOVA of the two groups Himachal versus Kashmir regions; (3) ANOVA of 12 groups of Himachal region, and (4) ANOVA of 8 groups of Kashmir region. Correlations of morphometric characters of individual bees with altitude (ALT) and rainfall (RAIN) within each of the biometric groups (Himachal region, Kashmir region). Only correlations with two-tailed significance probability < 0.01 are given. Highest correlations in bold print. n, sample size.

	ANOVA	Himachal region (n = 720)		Kashmir Region (n = 464)	
	FSIG	ALT	RAIN	ALT	RAIN
Forewing					
1	• • • -	.28	-.13	.19	-
2	• • • •	**.35**	-.16	.18	-
3	• • - •	-	-	-	-.13
4	• • • •	.18	-.15	.13	-.16
5	• • • -	**.46**	-	.13	-
6	• • - •	.14	-	.23	**.19**
7	• • • •	.12	-	**.30**	-
8	• • • •	-	-	.27	-
9	• • - -	**.12**	-	.13	-
10	- - - -	-	-	-	

BLE DOCUMENT

11	• • - -	-	-	-	-
12	• • •	-	-	.12	-
13	• • - •	-	-	.18	-
14	- - -	-	-	-	-
15	• • • -	.17	-.11	-	-
16	• • • -	.20	-	-	-
17	• • • •	-	-	.19	-
18	• - • -	-	-.10	-	-
19	• • - -	-	-	-	-
Hindwing					
20	• • • -	.16	-	.17	-
21	• - • -	.19	-.14	-	-
22	• • - -	-	-	-	-
23	• • • -	.24	-.09	-	-
24	• • • -	**.33**	-.16	-	-
25	• • • -	.14	-	-	-
26	• - • •	.20	-	**.32**	.13
27	• • • -	.18	-	-	-
28	• • • -	.20	-	-	-
29	• • • •	.23	-	.17	-
Hind leg					
30	• • • -	**.49**	-.16	.14	-
31	• • • -	.17	-.10	-	-
32	• • • -	.25	-	-	-
33	• • - -	.16	-	.12	-
Tongue					
34	- - - -	-	-	-	-

BEST AVAILABLE DOCUMENT

64

35	• • • •	-	-	-	-
36	• • • •	-	-	-	-
37	• • • -	-	-	-	-
38	• • • •	.13	-	.14	-
39	• • • -	-	-	.17	-
Abdomen					
40	• • • -	-.12	-	-.16	-
41	• • • •	**.35**	-.18	.21	-
42	• • • •	.17	-	.25	-
43	• • • •	-.13	-	-.24	-
44	• • • •	.21	-.10	.18	-
45	• • • •	.12	-	.26	-.13
46	• • • •	.11	-	.12	-.12
47	• • • •	-	-	-.16	**-.27**
48	• • • -	-	-	-	-
49	• • • •	.15	-	-	-
50	• • • •	**.39**	**-.19**	-	-
51	• • • •	**.32**	-.16	.12	-
Antenna					
52	• • • -	-	-	-	-
53	- - - -	-	-	-	-
54	• • • •	.18	-	-	-
55	• • • •	.19	-.10	.11	-

BEST AVAILABLE DOCUMENT

Table 7. Correlations of altitude (ALT), rainfall (RAIN), and 55 morphometric characters with principal components 1-3 (PC1, etc.), and percent explained by each component (%). Correlations > absolute value of 0.3 in bold print. Analyzed separately for each region.

	Himachal region			Kashmir Region		
	PC1	PC2	PC3	PC1	PC2	PC3
	4.0	1.7	1.6	4.3	1.9	1.8
ALT	**0.872**	0.054	-0.090	**0.560**	**-0.503**	-0.115
RAIN	**-0.413**	**0.370**	-0.041	0.025	-0.271	**0.426**
1	**0.312**	-0.092	0.067	**0.409**	0.092	0.020
2	**0.403**	0.137	-0.029	0.291	-0.109	-0.121
3	0.121	0.149	0.138	0.213	0.255	-0.247
4	0.263	0.060	0.133	**0.365**	0.113	**-0.331**
5	**0.486**	0.281	-0.048	**0.320**	0.018	0.110
6	0.175	0.046	-0.172	**0.330**	-0.225	0.125
7	0.179	-0.044	**0.381**	**0.331**	-0.264	-0.047
8	0.035	0.088	0.281	**0.301**	-0.048	-0.128
9	0.161	0.115	-0.246	**0.330**	0.182	0.098
10	0.037	-0.175	0.197	0.271	0.265	-0.092
11	0.081	-0.189	0.107	0.288	0.254	0.196
12	0.033	**0.296**	-0.149	**0.372**	0.082	0.051
13	0.062	0.111	0.086	0.263	-0.044	-0.210
14	0.123	-0.162	0.047	0.186	0.025	-0.174
15	0.271	**-0.304**	0.183	0.203	0.215	0.012
16	0.222	0.159	-0.059	**0.348**	0.141	0.126

BEST AVAILABLE DOCUMENT

17	0.072	0.051	0.222	0.270	-0.155	090
18	0.064	**-0.515**	0.049	0.181	0.067	0.172
19	0.089	-0.021	0.013	-0.049	-0.155	-0.082
20	0.191	-0.015	-0.219	**0.318**	-0.135	0.076
21	0.264	0.049	0.137	0.268	-0.031	-0.040
22	0.036	0.239	0.265	0.177	-0.047	-0.075
23	0.272	0.072	-0.110	0.276	0.052	-0.123
24	**0.368**	0.069	-0.081	0.160	0.244	-0.021
25	0.170	0.265	**-0.401**	0.225	0.000	-0.171
26	0.242	0.137	0.149	**0.372**	**-0.300**	0.265
27	0.239	0.209	0.088	0.177	0.104	0.113
28	0.240	0.078	-0.078	0.260	0.268	0.091
29	**0.309**	0.163	0.289	**0.341**	-0.128	0.231
30	**0.570**	-0.055	-0.153	**0.354**	-0.007	0.089
31	**0.313**	-0.104	0.240	**0.329**	0.281	0.023
32	**0.361**	-0.010	0.213	0.130	0.118	0.172
33	0.254	-0.119	0.246	**0.332**	0.104	-0.204
34	0.086	0.035	0.128	0.261	-0.039	0.217
35	0.083	0.080	-0.046	0.142	-0.140	0.105
36	0.025	-0.040	-0.136	0.212	0.077	-0.080
37	0.037	0.137	0.033	0.101	0.013	0.160
38	0.183	**0.312**	0.071	**0.305**	0.040	0.053
39	0.030	0.029	0.283	0.191	-0.184	**0.381**
40	-0.120	0.071	0.085	0.047	**0.341**	0.057
41	**0.417**	-0.239	-0.192	**0.353**	-0.012	-0.101
42	0.215	0.008	0.019	**0.422**	-0.106	-0.085
43	-0.155	0.226	0.014	-0.014	**0.447**	0.259

DOCUMENT

44	0.290	-0.136	-0.100	**0.318**	0.081	-0.288
45	0.201	-0.193	-0.110	**0.367**	-0.006	-0.106
46	0.155	0.236	0.245	0.243	0.047	-0.144
47	0.063	-0.143	0.021	-0.195	0.371	-0.033
48	0.079	-0.091	0.143	0.131	0.162	**0.412**
49	0.207	**0.379**	0.023	0.244	0.237	0.132
50	**0.483**	-0.110	-0.166	0.193	0.038	0.256
51	**0.388**	-0.142	-0.208	0.151	-0.109	**-0.304**
52	0.054	-0.045	0.208	0.288	0.042	0.229
53	-0.005	0.145	0.125	0.125	-0.177	-0.087
54	0.195	-0.096	0.022	0.271	0.200	-0.026
55	0.235	-0.099	0.027	0.202	0.044	-0.058

BEST AVAILABLE DOCUMENT

Legends for figures

Fig. 1 Phenogram from UPGMA cluster analysis of Euclidean distances between centroids representing samples from 20 localities. Site codes for localities are in Table 1. Himachal region and Kashmir region are biometric groups.

Fig. 2 Three dimensional views of the biometric relationships of samples from the Himachal and Kashmir regions which are shown here separately for clarity. Site codes for localities are in Table 1. Axes X, Y, and Z are the first 3 canonical discriminant functions from analysis of the 20 samples that account for 90.6%, 2.6%, and 1.2%, respectively, of the total variation. Centers of circles mark positions of centroids; diameter of circles is arbitrary.

BEST AVAILABLE DOCUMENT

KASHMIR AND HIMACHAL

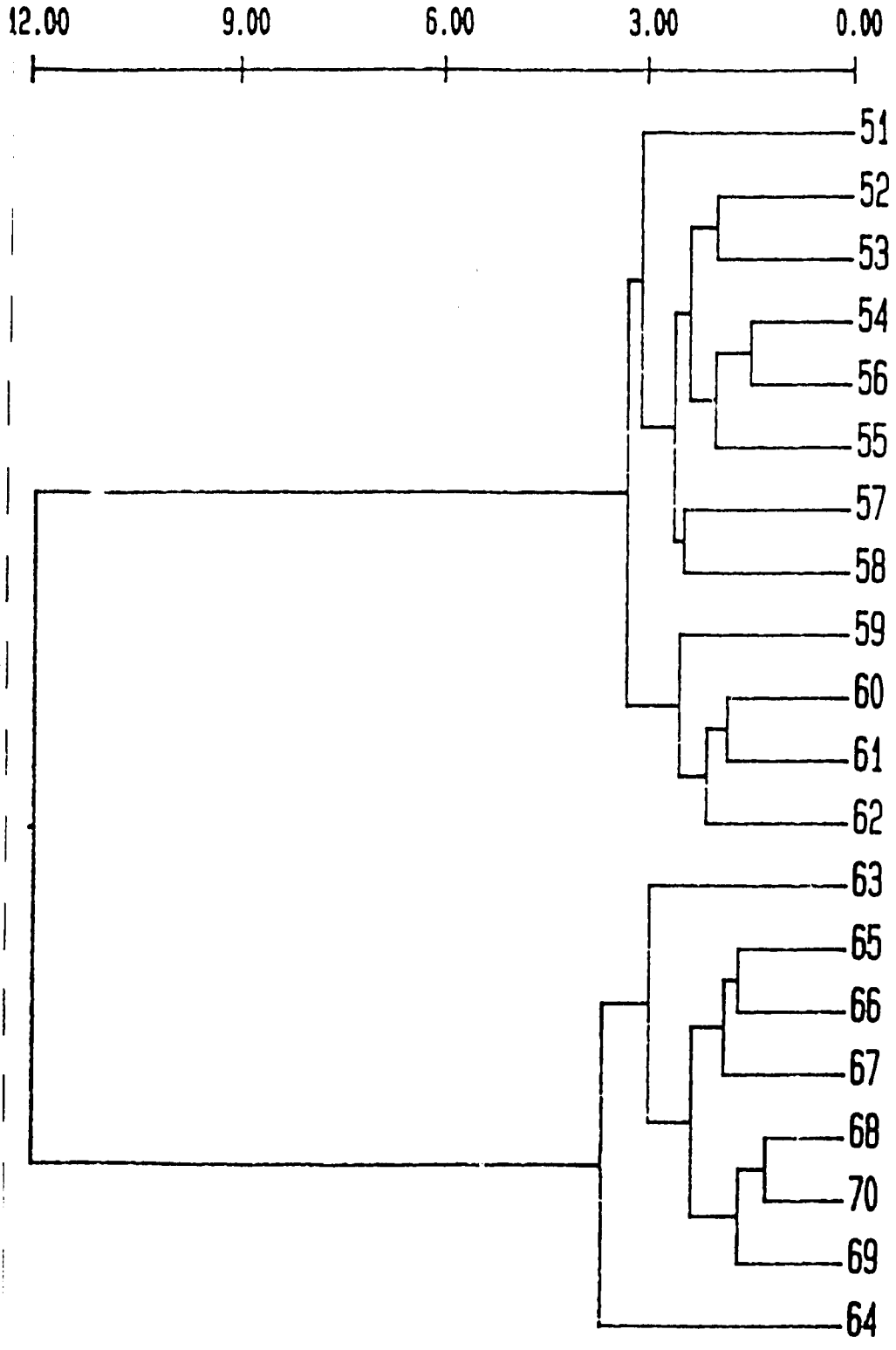

HIMACHAL

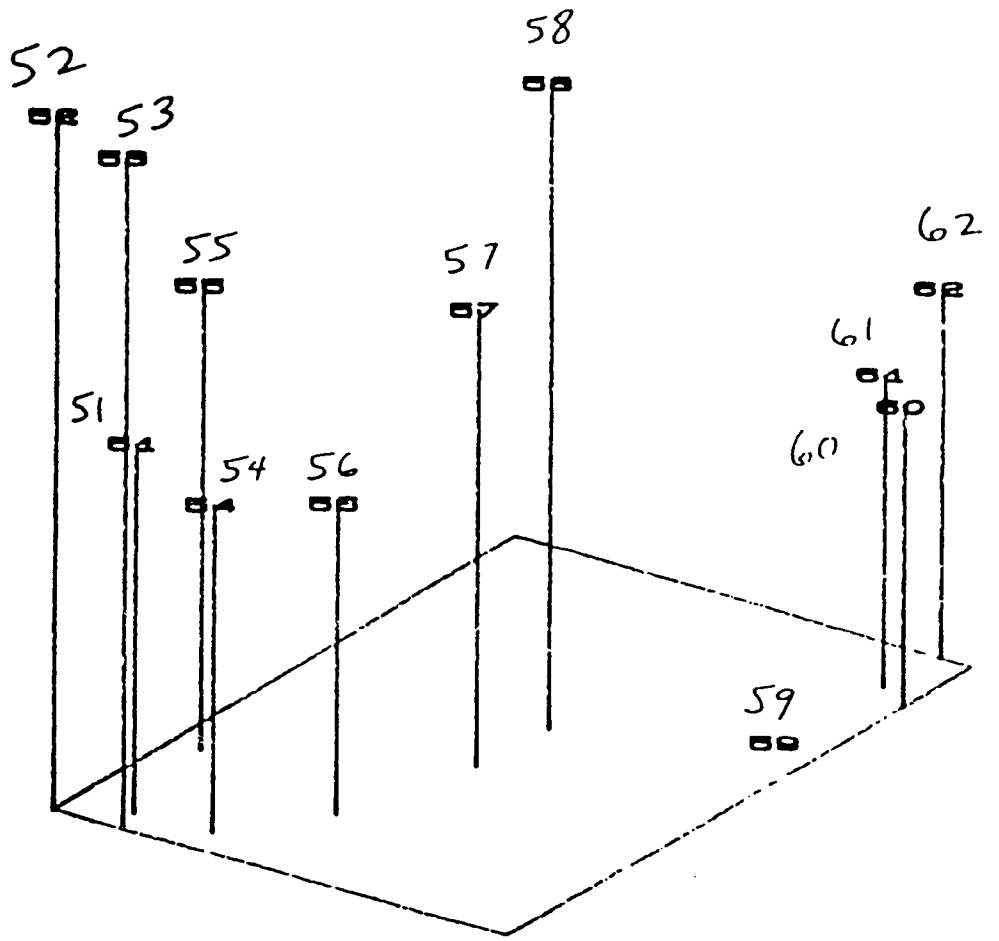

a=326 b= 25 r=99.0

NTSYS-pc (c) 1989 Applied Biostatistics Inc.

BEST AVAILABLE COPY

KMSTMIR

MOD3DG

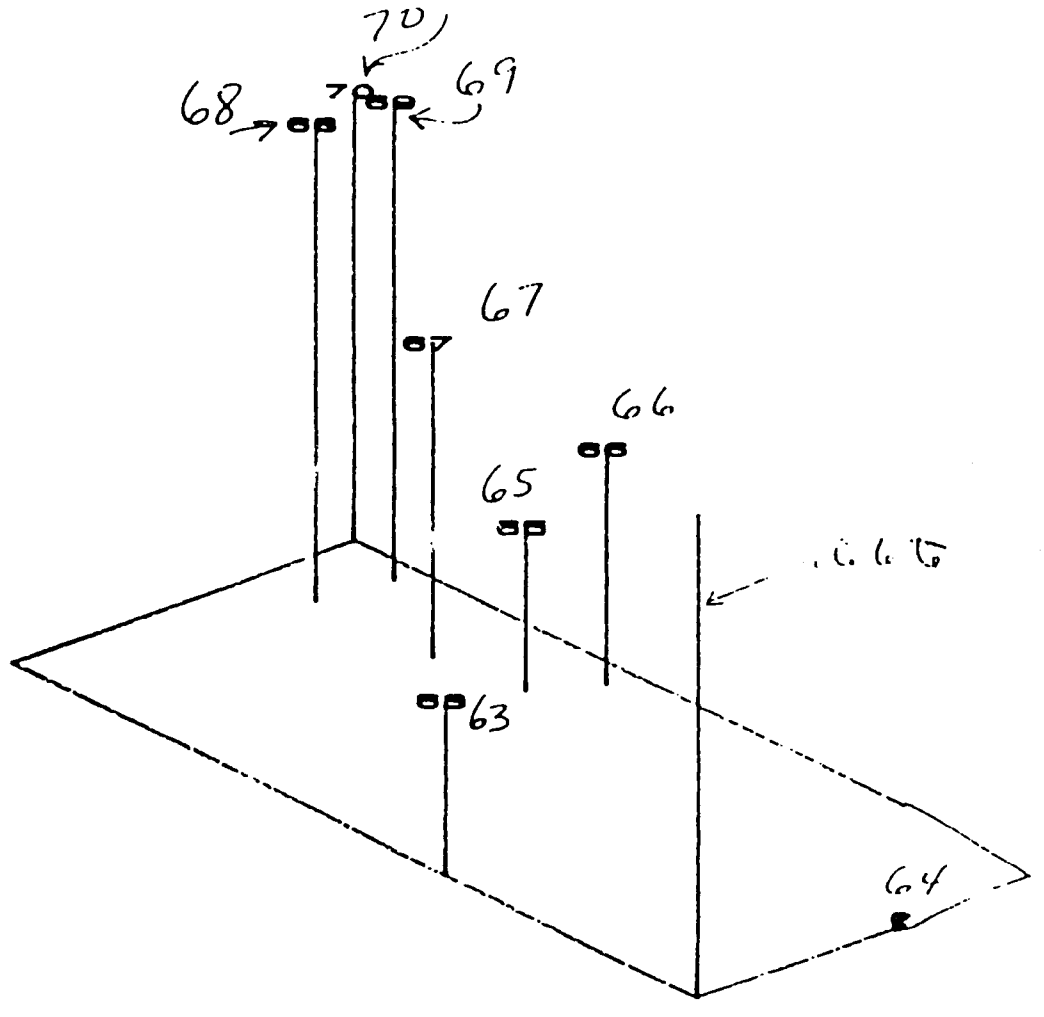

a= 41 b= 26 r=99.0

MTSYS-pc (c) 1989 Applied Biostatistics Inc.

BEST AVAILABLE COPY

72

BEST AVAILABLE COPY

Prog. Hort. 24(1-2) : 42—47, 1992

FLORAL BIOLOGY AND THE FORAGING BEHAVIOUR OF *APIS CERANA* F ON LETTUCE CROPS AND ITS IMPACT ON SEED PRODUCTION

UMA PRATAP AND L. R. VERMA

International Centre for Integrated Mountain Development, Kathmandu, P.O. Box 3226, Nepal

SUMMARY

Each lettuce plant had an average of 20 branches and each branch bore an average of 75 flowering heads (capitula). Each head was bright yellow in colour and 15 mm in diameter and was surrounded by a series of overlapping bracts called involucre. A head contained an average of 20-25 florets that developed simultaneously. Floral heads opened at 0822 h in the morning remained open for about 3.13 h and then closed at 1135 h. The total flowering period of the crop lasted for one month, i.e., mid-June to mid-July.

Bees started foraging on lettuce heads at 0846 h and kept on foraging until the head remained open. Peak foraging activity was observd between 0900-1100 h. Each bee spent an average time of 3.84 seconds on the flower, visited 10 flowers per minute, and collected a pollen load of 8 mg during a single foraging trip. The duration of each foraging trip was 15.66 minutes.

Bee pollination increased the number of seeds per fruit by 31.8 and 21.05 per cent and seed weight by 16.03 and 9.22 per cent respectively compared to control and open-pollinated plants respectively. The length of the seed increased by 23.88 and 11.26 and seed germination by 20.00 and 12.83 per cent compared to control and open pollinated plants respectively. Seeds from the bee-pollinated plants showed resistance to fungal attack.

INTRODUCTION

Lettuce (*Lactuca sativa*) is grown for its succulent leaves which are used for salad and as a vegetable. Lettuce flowers are usually considered as self-pollinated (Watts 9; Thompson *et al.* 6). There is no evidence in literature that lettuce flowers secrete any nectar (McGregor, 4). however, it is a good pollen plant and bees collect pollen from it (Thompson, 5).

The structure of the lettuce flower encourages self-pollination (McGreogor, 4) and the plants are self-compatible. Cross-pollination has also been observed however, (Thompson *et al.*, 6; Watts, 9). Cross-pollination of its flowers by wind is not possible because of the heavy and sticky nature of the pollen, and it is brought about by insect pollinators which visit lettuce flowers for their pollen. Jones (3) concluded that pollinating insects contribute to the effective transfer of pollen to the stigma within the flower and most likely between the flowers also.

Practically no work has been carried out on the pollination requirements of lettuce crops under the agroecological conditions of the Indian sub-continent. In the present investigation, detailed study of floral biology and the foraging behaviour of the Asian hive bee, *Apis cerana*, has been carried out in order to assess the suitability of the native bee species as a pollinator of lettuce crops.

MATERIALS AND METHODS

The foraging behaviour of *Apis cerana* on lettuce flowers (*Lactuca sativa* var. *atlanta*) was studied at the HMG/FAO Vegetable Seed Production Farm at Khumaltar in the Kathmandu valley. The crop was raised under standard agronomic practices.

Observations on the floral biology of the vegetable crops were recorded for the number of flowers per branch, time of opening and closing of flowers, size of buds and flowers, and total blooming period of the crop.

Observations on foraging behaviour were recorded for the daily time of initiation and cessation of foraging, duration of foraging activities individual bee's choice of nectar and pollen, weight of pollen load carried by a bee at different hours of the day, time spent on the flower and the number of flowers visited per minute. For other logistics of foraging behaviour studies, the methods given by Verma and Dulta (8) were followed.

Three sets of experiments were performed in order to estimate the impact of bee pollination on seed production:

1. Control (no insect pollinators)
2. Open-pollinated (only natural insect pollinators)
3. Bee-pollinated.

For control ten branches (one branch each of ten plants with an almost equal number of flowers/buds of almost the same age) were covered with muslin bags so that no insect pollinator could enter into the bag to pollinate flowers. For open pollinated flowers observations were made under natural conditions under which honeybees and other natural insect pollinators could visit the flowers freely. For honeybee-pollinated flowers, 75 plants were covered with a pollination cage which was 15 m long, 3 m wide, and 2-2-5 m high. When about 10 per cent of the crop was in bloom, a medium sized colony of *Apis cerana* with 7 frames covered with bees was placed in that pollination cage. The bees were kept inside that pollination cage until the end of the flowering period.

After the crop was ripe. 10 branches each from bagged, open-pollinated, and bee-pollinated plants containing almost an equal number of fruits were collected/harvested. Changes in the quality and quantity of the seeds due to bee pollination were assessed in terms of increase in the number of fruits per branch or per plant (fruit set); number of seeds per fruit; weight of 100 seeds, and per cent germination.

Data were analysed statistically using student's 't' test.

RESULTS

Observations on the floral biology of the lettuce plant have been summarised in Table 1 which shows that a lettuce plant had 20 (15-25) branches and each branch bore an average number of 75 (15-175) yellow flowering heads (capitula). Each head was about 15 mm in diameter and was surrounded by a series of overlapping bracts called the involucre. It contained an average number of 22 (20-25) small sessile flowers called 'florets' that developed simultaneously. Each floret had one celled ovary

BEST AVAILABLE COPY

74

with the style longer than the stamen and a bifid stigma; five stamens with syngeniceous anthers; and five toothed bright yellow coloured petals. The calyx was represented by a pappus.

Table 1. Floral Biology of Lettuces in the Kathmandu Valley, Nepal

Parameter	Mean	Range of Variation
No. of flowers* per branch	75	15-175
No. of flowers* per plant	1,500	1,000-2,300
Time of flower* opening	0822	0800-0900
**Time of flower* closing	1135	1100-1200
Diameter Capitulum/head(mm)	15	12-16
Length of bud(mm)	7	6-9
Total flowering period	One month (mid-June to mid-July)	

* In lettuces, small fowers (florets) cluster in the form of a head (or capitulum) surrounded by an involucre of bracts. Each head contains 20-25 flowers which open simultaneously. Data presented in this table are for flowering head/capitula and not for florets.

** On a cloudy day, flowers remain open for a long time.

The flowering heads (capiluta) opened at 0822 h in the morning (*i.e.*, between 0800-0900 h) and closed at 1135 h (*i.e.*, between 1100-1200 h) depending upon weather conditions, and thus remained open for 3.13 h only. The total flowering period of the crop lasted for about one month (*i.e.*, mid-June to mid-July).

Table 2 shows the foraging behaviour of honeybees on lettuce flowers. The

Table 2. Foraging Behaviour of Apis cerana on Lettuce Plants in the Kathmandu Valley, Nepal Values are mean ± S.F.

Parameter	Mean Value
Initiation of foraging (time of day)	0830±0.05
Cessation of foraging (time of day)	1130±0.05
Duration of foraging activity (h)	3.00±0.05
Peak foraging hours (time of day)	0900+1100
Duration of foraging trip (min)	15.66±0.04
Time of flower (sec)	3.84±0.02
Time taken to shift from flower to flower (sec)	2.69±0.07
Distance covered from flower to flower (cm)	9.86±2.01
No. of flowers visited per min	10.0±1.0
Pollen load (mg)	8.0±01
Number of Bees per Plant	4±1

BEST AVAILABLE COPY

75

bees started foraging on lettuce soon after the flowering heads were open *i.e.*, at 0830± 0.05 h and ceased their foraging activities only when flowering heads were closed, *i.e.*, at 1130±0.05 h. Peak foraging activity was observed between 0900-1100 h. The average duration of each foraging trip was 15.06±0.04 minutes. Each bee spent an average time of 3.84±0.02 sec on a flower, collected 8.0±0.1 mg of pollen, and visited 10.0±1.0 flowers per minute. Number of bees per plant was 4.0±1.0. Bees collected only pollen because the plant secreted no nectar.

Qualitative and quantitative effects of *Apis cerana* pollination are presented in Table 3. This table shows that bee pollination significantly increased the number of seeds per fruit by 31.8 and 21.05 per cent compared to control and open pollinated plants respectively. Seed weights increased due to bee pollination by 16.03 per cent compared to control and 9.22 per cent compared to open-pollinated plants. Bee pollination also increased the seed length by 23.88 and 11.26 per cent compared to control and open-pollinated plants respectively. The germination of seeds was enhanced by 20 and and 12.83 per cent compared to control and open-pollinated plants respectively. Moreover seeds from bee-pollinated plants showed resistance to fungal attack.

Table 3. Qualitative and Quantitative Effects of Apis cerana Pollination on Lettuce Seeds
Values are mean ± S.F.

Parameter	Control	Open Pollinated	Bee Pollinated	% Increase[1]	% Increase[2]
No. of Seeds per Fruit	15.70±0.63	17.10± [illegible].30	20.70±0.75	31.80**	21.05**
100 Seed Weight (mg)	109.57±0.46	110.41±0.39	127.14±0.85	16.03**	9.22**
Length of seed (mm)	3.35±0.10	3.73±0.09	4.15±0.10	23.88**	11.26*
Percent Germination	76.66	83.83	96.66	20.00	12.83
Resistance to Fungal Attack	Susceptible (6 out of 25 seeds were attacked by fungus)	Less resistant (2 out of 25 seeds were attacked by fungus)	More Resistant (no seeds was attacked by fungus)		

* = Significant (P = 0.05)

** = Significant (P = 0.01)

1. = Increase compared to control

2. = Increase compared to open-pollinated

BEST AVAILABLE COPY

76

DISCUSSIONS

The floral biology of the lettuce (*Lactuce sativa*) is similar to that described earlier by McGregor (4) and Free (2). This plant flowers during June-July when many other wild and cultivated plants are also in bloom, yet the bright yellow flowers of this plant attracted a goodly number of *Apis cerana* workers suggesting that it is quite attractive to bees and a good source of pollen. However, this plant did not produce any nectar (McGregor, 4).

Observations on the foraging behaviour (Table 2) suggested that inititation, cessation, and the peak hours of foraging activity of *Apis cerana* depend upon the time of opening and closing of the flower and the duration of its remaining open, which in turn depend upon environmental factors such as temperature, relative humidity, and sunlight. Bees started foraging soon after the flowers opened and ceased their foraging activities only when the flowers closed, and they collected sizeable amounts of pollen.

The lettuce flower is usually self-pollinated but cross-pollination has also been observed (Thompson *et al.* 6; Watts 9). The present results agree with these observations because some seed set was observed even in the control/bagged plants also. Bee pollinated flowers not only enhanced seed set, size and weight but the seeds produced from such flowers showed a higher germination percentage add resistance to fungal attack.

Thus it is not only the self-sterile varieties/cultivars which require cross-pollination, but also the self-fertile forms which would also produce more and better quality seeds if pollinated by honeybees and other natural insect pollinators. This enhancement in the yield and quality of seed might be because of heterosis (Verma, 7: Dulta and Verma, 1).

ACKNOWLEDGEMENTS

Authors are thankful to Mr. D. S. Rana, Mr. I R. Pandey and Mr. P K. Thapa of the HMG/FAO Vegetable Seed Production Project, Khumaltar, for providing necessary facilities. Authors are also thankful to Mr. Prem Thapa, beekeeper, for his technical help. Financial support from the USAID under Grant No. 367-5600-G-SS-1147-00 Programme in Science and Technology Co-operation and an ADB Grant for Sustainable Mountain Agriculture (RETA-5443) for carrying out the present work is thankfully acknowledged.

LITERATURE CITED

1. Dulta, P. C. and L. R. Verma (1988). Role of insect pollinator on yield and quality of apple fruit. *Indian J. Hort.* 28: 274-279.
2. Free, J. B. (1970). Insect Pollination of Crops, pp 135-150. London, UK: Academic Press.
3. Jones, H. A. (1927). Pollination and life history of Lettuce (*Lactuca sativa*). *Hilgardia* 2: 425-448.
4. McGregor, S. E. (1976). Insect Pollination of Cultivated Crop Plants. *USDA/ARS Agric. Handbook* 496: 242-247.
5. Thompson, R, C. (1933). Natural cross pollination in lettuce. *Amer. Soc. Hort. Sci. Proc.* 30: 545-547.

6. THOMPSON, R. C. WHITAKER, T. W., BOHN, C. W., AND VAN HORN, C. W. (1958). Natural cross pollination in lettuce. *Amer. Soc. Hort Sci. Proc.* 72: 403-09.

7. VERMA, L. R. (1990). Beekeeping in Integrated Mountain Development: Economic and Scientific Perspectives. New Delhi India: Oxford and IBH Publishing Co.

8. VERMA, L. R. AND DULTA, P. C. (1986). Foraging behaviour of *Apis cerana* and *Apis mellifera* in pollinating apple flowers. *J. Apic. Res.* **25**: 197-201.

9. WATTS, L. F. (1959). Natural cross pollination in lettuce, *Lactuca sativa*. *Nature* 181 (**4615**): 1084.

BEST AVAILABLE COPY

Pollination in Tropics
Proc. Int. Symp. Polln. Trop., 1993, India. (Eds.) G.K. Veeresh, R.Uma Shaanker and K.N. Ganeshaiah, Published by IUSSI - Indian Chapter, Bangalore.

POTENTIALS OF *APIS CERANA* AS POLLINATOR FOR INCREASING GLOBAL FOOD PRODUCTION

L.R. Verma
International Centre for Integrated Mountain Development (ICIMOD) P.O. Box 3226, Kathmandu, Nepal

Introduction

The sustainable development of agriculture in 21st century will necessitate a reorientation of the present crop production technologies. Instead of making substantial use of chemical fertilizers, biocides, irrigation facilities and heavy machinery for yield enhancement, a shift towards biologically based agriculture will become necessary to increase food productivity. Emphasis in future should be on the full utilization of underutilized resources which are environmentally more friendly. One such resource which is the concern of this paper is an increase in the yield of different cultivated crops through cross-pollination by honeybees.

The vital role honeybees play in enhancing the productivity levels of different crops such as fruits and nuts, vegetables and pulses, oil and forage crops has often been underestimated especially in developing countries all over the world. Most of the research work on crop pollination has been carried out in developed countries where European honey bee, *Apis mellifera* has been extensively utilized to increase the yield of different cultivated crops. The non-consumptive benefits of increasing crop yields through cross-pollination by honeybees are difficult to quantify yet these far outweigh direct values of the social insects as producers of honey and other hive products. The value of bee pollination in crop production in U.S.A. has been estimated at US $ 20 billions per year (USDA-ARS, 1991). A recent FAO report indicates that direct contribution of pollinators to farm harvests in 20 mediterranean countries reached US$ 5.2 billions a year: 3.2 billions for developing countries in the region and 2 billions for the others. These estimates suggest that there is a need to create awareness amongst the policy makers, planners, and aid agencies about promoting bees and bee keeping as an important component of present day strategies for sustainable agriculture and integrated rural development programmes.

BEST AVAILABLE DOCUMENT

Genetic Diversity of *Apis cerana* In India

Amongst the different species of honeybees found in India, *Apis cerana* is equivalent of European honeybee *Apis mellifera*. Both these species build parallel combs and can be domesticated. The genetic diversity of *Apis mellifera* has been organised into 24 sub-species having varied economic usefulness. These sub-species are adapted to wide range of ecological conditions and occur at latitudes ranging from 0° (equator) to 50° N and 30° S (Verma, 1991).

Our research group in ICIMOD has successfully identified and recognized three sub-species of *Apis cerana*, although there may be several more because of its wide geographic distribution. These sub-species, *Apis cerana cerana*, *Apis cerana himalaya* and *Apis cerana indica* correspond to the geographic distribution in north-west, north-east Himalayas and South India respectively (Verma, 1992a).

Apis cerana has many valuable characteristics of biological and economic importance which make it in some ways more desirable as a domesticated hive bee. These include their low stinging tendency, their ability to protect the nests from attacks of wasps and their high level of resistance to nosema disease and parasitic mites that plague *Apis mellifera*. *Apis cerana* can co- exist with other native bee species and little or no drug treatment of colonies is required to control epidemics. In contrast, *Apis mellifera* bee keeping in Asian region requires expensive treatments against diseases and mites (Verma, 1992d).

However beekeeping with *Apis cerana* has certain constraints because of several of its inherent behavioural characteristics. These include frequent swarming and absconding, proneness to robbing nectar, production of large number of laying workers and lower honey yields per colony (Verma, 1992b). These behavioural traits vary from one sub-species to another. For example, *Apis cerana* native to high altitudes of north-west Himalayas, is a superior genotype as far as commercial production goes and can be genetically improved further by selection and breeding.

Exotic *Apis mellifera*: Problems and Prospects

There is a current movement in Asia including India to import European hive bee, *Apis mellifera* for commercial exploitation. As a result of continuous research efforts in the area of genetic diversity, selective breeding and improved management practices, *Apis mellifera* produces three times more honey than *Apis cerana*. Further, colonies of *Apis mellifera* unlike that of *Apis cerana* maintain prolific queens, and exhibit less swarming and absconding tendencies. However, many imports of exotic *Apis mellifera* to Asia have proved disastrous. When kept sympatrically, *Apis cerana* and *Apis mellifera* frequently rob each other.

Attempts to obtain intermating between these two species have been useful. A new and serious problem is parasitic mite infestation of *Apis mellifera* with no serious damage to native *Apis cerana*. There is now apprehension that import of *Apis mellifera* will lead to the decline of *Apis cerana* population in its native habitat to a level that threatens its existence as valuable genetic resource. In Japan and China, exotic *Apis mellifera* has now largely replaced native *Apis cerana*. Other Asian countries such as Pakistan and India are now following this trend (Verma, 1992c).

Comparative foraging behaviour of *Apis cerana* and *Apis mellifera* on apple bloom.

Introduction of *Apis mellifera* has put the beekeeping industry in Asia in a dilemma. In order to resolve such dilemma, it is important to study the comparative biology, behaviour and management of *Apis cerana* and *Apis mellifera* under co-geographic conditions of this region. Such interspecific information can be of great practical value to both bee keepers and bee scientists. Keeping this in view, our research group has made detailed investigations on foraging behaviour of *Apis cerana* and *Apis mellifera* on apple bloom in Himachal Pradesh and results of these investigations are summarized below.

Worker bees of *Apis cerana* started foraging significantly earlier ($p<0.01$) and ceased later ($p<0.01$) than did *Apis mellifera*. Average duration of foraging activity in *Apis cerana* (13.10 hours) was significantly more than in *Apis mellifera* (12.28 hours). The duration of foraging trips was significantly longer ($p<0.01$) for *Apis mellifera* than for *Apis cerana*. In *Apis cerana*, pollen and nectar collectors were not found, whereas, in *Apis mellifera*, the percentage of such forager bees varied from 6 to 11 per cent. In both species, nectar collectors outnumbered pollen collectors (Verma and Dulta 1986).

Hourly fluctuations in the number of bees leaving the hive showed that the peak activity of *Apis cerana* was between 0900 and 1130 h (mean 132 bees/5 minutes) at temperature from 15.5 to 21.0°C and that of *Apis mellifera* was between 1100 and 1300 h (mean 118 bees/5 minutes) when the temperature ranged from 21- 25°C during the months of March-April in Shimla hills. The interspecific difference is remarkable from the pollination point of view because by keeping both species of honey bees in the same orchard, the duration of peak period of foraging activity can be prolonged to ensure better pollination.

However, there were no significant differences between *Apis cerana* and *Apis mellifera* with regard to the number of stigma contacted per minute, time spent per flower, their visits to apple trees in the same or different rows in the orchard, number of flowers visited per apple tree, number of

apple trees visited per foraging trip, and the ratio of top-and side-working bees on apple bloom throughout the day. Results on foraging behaviour of *Apis cerana* and *Apis mellifera* at three different altitudes; 1350, 1857 and 2400 meters amsl, showed that initiation of foraging activity was delayed and its cessation advanced with increasing altitude. In both species duration of each foraging trip increased with increase in altitude of the orchard. Altitude had no significant effect ($p>0.05$) on other parameters such as bees preference for pollen, or nectar, or both during a visit, peak hours of foraging activity, pollen load, number of stigmas contacted per visit, and time spent per flower.

Foraging efficiency and flight range in honeybees depend upon the number and diameter of the flight muscle fibers and their fuel content. Our investigations (Dulta and Verma 1987) revealed that the number of fibers in dorsolongitudinal, dorsolateral, dorsoventral, pleurosternal, and intersegmental muscles of *Apis mellifera* were significantly greater than in *Apis cerana* ($p<0.05$). Similarly, diameter of flight muscle of *Apis mellifera* was significantly greater ($p<0.05$) than of *Apis cerana*. Fuel content in terms of glycogen, total lipids, and associated enzyme systems were greater in *Apis mellifera* than in *Apis cerana* (Dulta and Verma 1989). Morphometric analysis show that *Apis mellifera* is bigger than *Apis cerana* and the flight range of *Apis mellifera* is double that of *Apis cerana*. Thus, characteristics of flight muscles and their fuel content correspond to body size and also appear to be related to flight range and foraging efficiency.

In India, the Himachal Pradesh State Horticulture Department and a few private beekeepers rent *Apis cerana* and *Apis mellifera* colonies to the fruit growers at the time of apple bloom for pollination. Generally, at the onset of winter season (November - December), colonies of both *Apis cerana* and *Apis mellifera* are taken from the temperate hilly region to the sub-tropical plain area. There, brood - rearing usually starts in the first or second week of February. By mid-March, colony strength reaches its maximum and this is the time when flowering in apple orchards starts. Colonies are transported in trucks directly to the apple growing belt of the state and distributed to the fruit growers. Although the number of colonies distributed for pollination is small, given the large area of land under fruit cultivation in Himachal Pradesh, apple growers are now aware of the important role honeybees play in apple pollination. As a result of this practice by the State Horticulture Department, many fruit-growers now maintain their own colonies of bees for the purpose of pollination and honey production (Verma, 1991).

Advantages of *Apis cerana* over *Apis mellifera* as Crop Pollinator

Based on the above observations on foraging behaviour and also data obtained by other investigators, it could be argued that *Apis cerana* may be preferred over *Apis mellifera* for the pollination of agricultural crops.

82

Apis cerana begins foraging (pollination) activities at a lower temperature (3-5°C cooler) than *Apis mellifera.* Further, peak foraging activity of *Apis cerana* occurs at temperature 5-6°C cooler than *Apis mellifera.* Thus, *Apis cerana* could be used for crops blooming in early spring and at latitudes at least as far north (or south) where *Apis mellifera* is used.

The flight range of *Apis cerana* is less than half of *Apis mellifera.* This is of particular interest from point of view of pollination of small plots of specific crops. An *Apis cerana* hive can be placed in the vicinity of a specific crop as it would restrict to pollinating that crop and does not wander or escape.

The average daily duration of foraging activity of *Apis cerana* is longer than that of *Apis mellifera.* This is because of their early initiation and late cessation of foraging activity. *Apis cerana* may thus ensure adequate pollination of the crop in bloom in less period of time particularly during adverse weather conditions (monsoon or frostily spring seasons) when honeybee activity becomes severely limited.

As a result of loss of habitat due to severe deforestation and rapid agricultural transformation, both food sources (nectar and pollen) as well as nesting sites are increasingly becoming a limiting factor throughout the range of *Apis cerana.* Introduction of the exotic honeybee, *Apis mellifera* will accentuate these limitations because it would compete for both the food and physical (resting space) resources. This will eventually lead to reduction in population of native pollinators or maintain them at much lower levels than if this exotic honeybee species were not present. The deleterious effects of such competition are more particularly likely between *Apis mellifera* and *A. cerana* as both of them occupy the same ecological niche and are also more closely related to each other in habits, constitution and structure. Further, since *Apis mellifera* is more aggressive and prolific than *Apis cerana*, according to competitive exclusion principle of Hardin (1960), it could be expected that this exotic honeybee species will completely displace *Apis cerana.*

A large number of fruit, vegetable oil seed and other crops have evolved in association with *Apis cerana* or other native pollinators. It is likely that these plants have developed symbiotic relationship with the pollinators. Exotic *Apis mellifera* may disturb such co-existence and inefficiently pollinate native crop plants reducing their reproductive success.

Beekeeping with *Apis mellifera* in comparison to *Apis cerana* requires high cost technology which the small and marginal farmers in developing countries of Asia cannot afford. *Apis mellifera* also requires chemical treatment of colonies to control epidemics which is undesirable both from economic and environmental health point of view.

Beekeeping with *Apis cerana* is a centuries old traditional occupation which forms an integral part of cultural and natural heritage of rural

communities in Asia. Such an environmentally friendly occupation/craft may die through the introduction of exotic *Apis mellifera*.

Apis cerana : A Potential Crop Pollinator for Global Commercial Development

Apis cerana could potentially be of great importance to beekeeping and pollination even outside its range. New technologies in molecular biology will present opportunities to introduce genes that code for desirable characteristics of *Apis cerana* into population of *Apis mellifera* and vice-versa. However, introduction of *Apis cerana* outside its native range for global commercial development would require following testing and monitoring.

- identification of commercially valuable sub-species/geographic ecotypes of *Apis cerana* in its native habitat;
- Selection and testing of the stock on off-shore islands;
- Zonation of areas for *Apis cerana* and *Apis mellifera* beekeeping. Such zonation would solve the problem of inter- species competition.

Acknowledgment

This research was supported in part under grant no. 367-5600-SS-1147-00 program in Science and Technology Co-operation, Office of Science, U.S. Agency for International Development.

References

Dulta, P.C. and L.R. Verma, (1989) *J. Apic. Res.*, 28 :136-147

Dulta, P.C. and L.R. Verma, (1987) *J. Apic. Res.*, 26 :205-209

Hardin, G., (1960) *Science*, 131 :1297-1299

USDA-ARS, (1992) . *Pollination research workshop report*, Denver, Colorado, USA.

Verma, L.R. (1991) *Bee keeping in integrated mountain development: economic and scientific perspectives.* Oxford and IBH Publishing Co., New Delhi, pp 367

Verma, L.R., (1992a) On the declining genetic diversity of Apis cerana in Hindu Kush-Himalaya. *Proc. Inter Cong. on Asian Bees and Bee Mites, Bangkok*, (in press)

Verma, L.R., (1992b) Strategies for conservation of Asian hivebee *Apis cerana. Proc. Inter Entomol. Congr. Beijing*, :pp 236

Verma, L.R., (1992c) A framework for R & D on beekeeping with Asian hivebee, *Apis cerana. Proc. Workshop on R & D on bees and beekeeping in Tropical Asia, Serdang, Malaysia* (in press).

Verma, L.R., (1992d) *Honeybees in mountain agriculture.* Oxford & IBH Publishing Co., New Delhi, pp. 274

Verma, L.R. and P.C. Dulta, (1986) *J. Apic. Res.*, 25 :197-210

84

Pollination In Tropics
Proc. Int. Symp. Polln. Trop., 1993, India. (Eds.) G.K. Veeresh, R.Uma Shaanker and K.N. Ganeshaiah, Published by IUSSI - Indian Chapter, Bangalore.

POLLINATION OF VEGETABLE CROPS USING THE ASIAN HIVE BEE, *APIS CERANA*, IN THE KATHMANDU VALLEY, NEPAL

Uma Partap and L.R. Verma
International Centre for Integrated Mountain Development (ICIMOD)
Kathmandu, Nepal

Many vegetable crops are completely or partially self-incompatible and incapable of pollinating themselves, so the cross-pollination of their flowers by insects, especially honeybees, is very essential (Verma, 1990). Cauliflowers, cabbages, radishes and lettuces are some of the important vegetable crops grown in the Kathmandu Valley of Nepal. We carried out detailed investigations on the utilisation of the native Asian hive bee, *Apis cerana*, to enhance the yield and quality of seed production in these crops.

Plants of these vegetable crops, i.e. cauliflowers (*Brassica oleracea* var. *botrytis* sub-var Kathmandu Local); cabbages (*Brassica oleracea* var. *capitata* sub-var Pride of India); radishes (*Raphanus sativus* var. Mino Early), and lettuces (*Lactuca sativa*) were raised on the experimental plots. of the HMG/FAO Vegetable Seed Production Farm, Khumaltar, Kathmandu, Nepal, during different times of the year. Three treatments were imposed on each crop when it started blooming, namely (1) Control (no insect pollinators), (2) Open-Pollinated (only natural insect pollinators), and (3) Bee-pollinated.

For control, ten branches (one each from ten plants with an almost equal number of flowers/buds of almost the same age) were covered with muslin bags so that no insect pollinator could enter to pollinate the flowers; for honeybee-pollination, about 100 plants were covered with a pollination cage and a colony of *Apis cerana*, with 7 frames covered with bees, was placed in the cage when about 5–10 per cent of the crop was in bloom. Observations on the foraging behaviour were recorded at 0900, 1200 and 1500 h each day. To differentiate between pollen and nectar collectors, the method of Erickson *et al.*,(1973) was followed; the weight of pollen loads were determined by anaesthetising the bees returning with pollen loads with carbon dioxide (Frisch, 1967) and then removing their pollen loads and weighing them. Changes in the quality and quantity of the seeds as a result of bee-pollination were assessed in terms of increase in fruit set, number of seeds per fruit, and increase in seed weight.

85

Cauliflower

Apis cerana started foraging at 0700 h and ceased activities at 1805 h. The total duration of foraging activity was 11.03 hour and peak foraging activity occurred between 1000–1300 h. The duration of each foraging trip was 26.8 minutes. Each worker bee spent an average of 5.6 seconds on the flower, visited 6–8 flowers per trip, and the number of bees per plant varied from 4–9. At 0900 h, pollen collectors (P) outnumbered nectar (N) collectors; this ratio was equal at 1200 h but at 1500 h nectar collectors outnumbered pollen collectors. *Apis cerana* collected either pollen or nectar but not both during the same foraging trip. Bee pollination significantly increased fruit set by 57 and 20 per cent compared to control and open-pollinated plants. Similarly, the number of seeds per siliqua increased by 85 and 25 per cent compared to control and open-pollinated plants respectively. *Apis cerana* pollination also resulted in an increase in the seed weight (by 38.6 and 27.2 per cent) and enhanced seed germination (by 16 and 12 per cent compared to control and open pollinated plants respectively).

Cabbage

Worker bees of *A. cerana* began foraging at 0630 h and ceased their activities at 1835 h; thus, the total duration of foraging activity was 12.05 hour. Peak foraging activity was observed between 1000–1300 h and duration of each foraging trip was 23.8 min. Each bee made an average of 10 foraging trips per day. *A. cerana* worker collected either pollen or nectar but never both during the same foraging trip. During morning hours pollen collectors outnumbered nectar collectors (P:N = 6:4). This ratio was equal at 1200 h (P:N = 5:5) and at 1500 h nectar collectors outnumbered pollen collectors (P:N = 4:6). Each worker bee spent 4-7 seconds on the flower and collected 8–10 mg of pollen. Bee pollination resulted in an increase in fruit and seed set by 27 and 32 per cent respectively compared to open pollinated plants. Control plants did not set any fruit, indicating that the crops are self-incompatible. Bee-pollination significantly increased the weight of the seeds by 33.8 per cent and germination by 28 per cent compared to open-pollinated plants.

Radish

A. cerana worker bees started foraging at 0840 h and ceased activity at 1830 h; thus the total duration of foraging activity was 9.5 hour per day. Peak foraging activity was observed between 1100–1300 h. Each bee made an average of nine trips in a day and the duration of each foraging trip was 22.1 minutes. A bee spent 4–12 seconds on a flower and carried 7–11 mg of pollens. Most of the bees collected either pollen or nectar, but a few bees (4% during the morning and 7% at noon) collected both pollen as well as nectar during the same foraging trip. Pollen collectors outnumbered nectar collectors at 0900 h (P:N = 6:4), the ratio was equal (P:N = 5:5) at noon and in the afternoon, at 1500 h nectar collectors

86

outnumbered pollen collectors (P:N = 3:7). Bee pollination significantly enhanced fruit set by 23 per cent compared to open-pollinated plants. Bee-pollination also significantly increased the number of seeds per siliqua (by 28.6 per cent) and seed weight (by 30.8 per cent) compared to open- pollinated plants. Control branches did not set any fruit, indicating that the crop was self-incompatible. Bee-pollination enhanced seed germination by 32 per cent.

Lettuce

The bees started foraging on lettuce soon after the flowering head was open, i.e. at 0830 h and ceased their activities only when the flowering heads were closed, i.e. at 1130 h. Peak foraging activity was observed between 0900–1100 h and the average duration of each foraging trip was 15.6 minutes. Each bee spent an average of 3.84 sec on a flower, collected 8 mg of pollen and visited 13 flowers per minute. The number of bees per plant was 4. The bees collected only pollen because the plant did not secrete nectar.

Bee pollination significantly increased the number of seeds per capitulum (flowering head) by 31.8 and 21.05 per cent compared to control and open-pollinated plants respectively. Seed weight increased by 16.0 per cent due to bee- pollination, compared to control, and by 9.2 per cent compared to open-pollinated plants. Seed length increased by 23.8 and 11.2 per cent and breadth by 13.2 and 3.2 per cent respectively over that of control and open-pollinated plants. Finally, germination of seeds was enhanced by 20 and 12.8 per cent in bee pollinated plants compared to control and open- pollinated plants respectively. Seeds from bee-pollinated plants also showed resistance to fungal attack.

Acknowledgements

The authors are thankful to Mr. D.S. Rana, Mr. I.R. Pandey and Mr. P.K. Thapa of HMG/FAO Vegetable Seed Production Project, Khumaltar, Kathmandu, Nepal for providing the necessary facilities. Our thanks go to Prem Thapa, Beekeeper, for technical help. Financial support provided by USAID under Grant No.367–5600-G-SS-1147–00, Programme in Science and Technology Cooperation and by an ADB Grant for Sustainable Mountain Agriculture (RETA – 5443) for carrying out the present work is thankfully acknowledged.

References

Erickson, E.H., Whitefort, L.O. and Kissinger, W.A. 1973. *Envir. Ent.*, **2** : 531–535.

Frisch, K. von. 1967. *The Dance Language and Orientations of Bees.* Cambridge, USA: Harvard University Press.

Verma, L.R. 1990. *Beekeeping in Integrated Mountain Development: Economic and Scientific Perspectives*, pp.367. New Delhi: Oxford and IBH Publishing Co.

J. Apic. Res. (in press)

Foraging Behaviour of *Apis cerana* on Cole Vegetable Crops and Its Impact on Seed Production

L.R. Verma and Uma Partap

International Centre for Integrated Mountain Development (ICIMOD),
Kathmandu, P.O. Box 3226, Nepal

Summary

Floral biology and the foraging behaviour of *Apis cerana* on cauliflowers and cabbages have been studied. Each cauliflower and cabbage plant had an average of 7 and 12 branches, and each branch bore an average of 600 and 94 flowers respectively. Each yellow flower of cauliflower and cabbage was 14-15mm in diameter and each bud about 8-9 mm long. The flowers of both these crops opened in the morning and remained open for two to three days; and the total flowering period of each crop lasted for about one month.

Foraging behaviour data reveal that *Apis cerana* worker bees started foraging on cauliflowers and cabbages at 0702 and 0630 h in the morning and ceased their activities at 1805 and 1835 h in the evening respectively. Thus the total duration of foraging activity on cauliflowers was 11.03 h and on cabbages 12.05 h. Peak foraging activity was observed between 1000-1300 h in the case of both cauliflowers and cabbages and the duration of each foraging trip was 26.87 and 23.87 min for cauliflowers and cabbages respectively. Each worker bee spent an average time of 5-16 and 4-7 seconds on a flower and visited an average of 6-7 and 5-7 flowers per minute of cauliflowers and cabbages respectively during different hours of the day, i.e., at 900, 1200, and 1500 h. Bees either collected pollen or nectar but never both during the same foraging trip from both the crops. During morning hours, pollen collectors outnumbered nectar collectors, the P:N ratio was equal at noon, and, in the afternoon hours, nectar collectors outnumbered pollen collectors in the case of both crops. Each bee collected a pollen load of 5-9 mg per trip from cauliflowers and 8-10 mg per trip from cabbages, during different hours of the day.

The qualitative and quantitative effects of *Apis cerana* pollination on cauliflowers and cabbages reveal that bee pollination significantly increases the fruit set by 57 and 20 per cent respectively compared to control and open-pollinated cauliflower plants and by 27 per cent in the case of cabbages. In cabbages, control plants had no fruit set. Siliqua from control, open-and bee-pollinated cauliflower plants had 3, 15, and 20 seeds whereas, from open and bee-pollinated cabbage plants, each siliqua contained 18.5 and 28.3 seeds respectively. Bee pollination increased seed germination by 16 and 12 per cent compared to control and open-pollinated cauliflower plants and by 28 per cent compared to open-pollinated cabbage plants.

BEST AVAILABLE DOCUMENT

88

Introduction

Beekeeping with the Asian hive bee (*Apis cerana*) is a centuries' old traditional occupation which is an integral part of the cultural and natural heritage of rural communities in the developing countries of south and southeast Asia. This native bee species has been successfully domesticated, especially for the production of honey and beeswax. The role of the bee species as pollinators of entomophilous crops is little understood and often underestimated throughout its range (Verma 1990). At present when beekeeping with *Apis mellifera* is facing serious constraints because of parasitic bee mites and fiercely stinging Africanised bees, a search for alternative pollinating agents is being intensified. In this respect, *Apis cerana* is potentially of great economic importance to beekeeping and pollination even outside its range. Against this background we have made detailed investigations into the foraging behaviour of this bee species on commonly-grown vegetable cole crops (cauliflower and cabbage) and its impact on seed production in the Kathmandu Valley of Nepal. Results of this investigation may also be of practical use in evaluating the role of this native bee species as a pollinator of cultivated crops in general.

Material and Methods

The foraging behaviour of *Apis cerana* on the flowers of cauliflower (*Brassica oleracea* var *floribunda* subvar Kathmandu Local) and cabbage (*Brassica oleracea* var. *capitata* subvar Pride of India) was studied at the HMG/FAO Vegetable Seed Production Farm at Khumaltar in the Kathmandu Valley. These crops were raised under standard agronomic practices.

Observations on the floral biology of the vegetable crops were recorded for the number of flowers per branch, time of opening and closing of flowers, size of buds and flowers, and total blooming period of the crop.

Observations on foraging behaviour were recorded for the daily time of initiation and cessation of foraging, duration of foraging trips, peak hours of foraging activity, individual bee's choice of nectar and pollen, weight of pollen load carried by a bee at different hours of the day, time spent on the flower, and the number of flowers visited per minute. For other logistics of foraging behaviour studies, methods given by Verma and Dulta (1986) were followed.

In order to differentiate between nectar and pollen collectors, returning foragers were collected with the aid of an aspirator at the hive entrance and frozen to prevent regurgitation of nectar. The frozen bees were sorted out for the type of forage, following the method of Erickson et al. (1973). The worker bees alighting on the petals and collecting nectar without touching the stigma were considered to be side workers, whereas those alighting upright on the stamens and collecting nectar/pollen were termed top workers. Weights of pollen loads were determined by anaesthetising samples of returning bees with carbon dioxide (Frisch 1967), removing their pollen loads and weighing them.

89

Three sets of pollination experiments were performed for each crop in order to estimate the impact of bee pollination on seed production.

(i) Control (no insect pollinators)

(ii) Open-pollinated (only natural insect pollinators)

(iii) Bee pollinated

For control, branches (one branch each of ten plants with an almost equal number of flowers/buds of almost the same age) were covered with muslin bags so that no insect pollinator could enter the cage to pollinate the flowers. For open-pollinated flowers, observations were taken under natural conditions in which natural insect pollinators could visit the flowers freely. For honeybee-pollinated flowers, 75 plants were covered with a pollination cage which was 15 m long and 3 m wide, and 2-2.5 m high, so that no insect pollinator could enter in. When about 10 per cent of the crop was in bloom, a medium-sized colony of *Apis cerana* having 7 frames covered with bees, was placed in the pollination cage. The bees were kept inside the pollination cage until the end of the flowering period.

After the crop was ripe, 10 branches each from bagged, open and bee-pollinated plants containing an almost equal number of fruits, were collected/harvested. Changes in the quality and quantity of seeds due to bee-pollination were assessed in terms of increase in the number of siliqua (fruit set) per branch or plant seeds per siliqua, weight of a 100 seeds, and percentage germination.

Data were analysed statistically using the student's 't' test.

Results

The floral biology of the crops is given in Table 1. Cauliflowers and cabbages had an average number of 6 to 7 and 10 to 15 branches per plant, with an average number of 600 and 94 flowers respectively and the average number of flowers per plant was 4,000 and 1,128 respectively. Flowering started in the middle of February in the cauliflower and in the middle of March in the cabbage. For both crops, the flowers opened in the morning hours and remained open for two to three days, and the total flowering period lasted for about one month.

Each yellow flower of these crops had four sepals, four yellow-coloured cruciform petals, and six tetradynamous stamens arranged in two whorls (four long stamens arranged in two pairs were inner in position, while two short stamens were outer in position). Four green dot-like nectaries were present at the base of the outer and inner paired stamens and a bicarpellary, syncarpous, superior ovary, small style, and a capitate stigma. The sizes of the bud (8-9 mm long) and of the flower (14-15 mm in diameter) were almost the same in both crops.

BEST AVAILABLE DOCUMENT

90

Foraging behaviour data (Table 2) suggested that the *Apis cerana* worker bees started foraging on cauliflowers at 0702 ± 0.02 h in Feb-March when the outside temperature and relative humidity were 7°C and 99 per cent respectively. They ceased their foraging activities at 1805 ± 0.02 h when the outside temperature and relative humidity were 13°C and 96 per cent respectively. In the case of cabbages, foraging activities started at 0630 ± 0.02 h when the outside temperature and relative humidity were 12°C and 74 per cent respectively. Worker bees ceased foraging on this crop at 1835 ± 0.03 h at an environmental temperature of 20°C and a relative humidity of 50 per cent. Thus the total duration of foraging activity was 11.03 ± 0.03 and 12.05 ± 0.05 h per day for cauliflower and cabbage crops respectively. Peak foraging activity was observed between 1100-1300 h for both cauliflowers and cabbages (Figure 1). Worker bees spent on an average 5.83 ± 0.32 and 4.33 ± 0.21 seconds at 0900 h, 6.69 ± 0.5 and 4.63 ± 0.32 seconds at 1200 h and 5.14 ± 0.2 and 6.69 ± 0.24 seconds at 1500 h on each cauliflower and cabbage flower respectively. The number of flowers visited per minute on cauliflowers and cabbages were 7.0 ± 0.5 and 7.0 ± 0.40 at 0900 h; 6.0 ± 1.0 and 7.0 ± 0.50 at 1200 h and 8.0 ± 0.50 and 5.0 ± 0.5 at 1500h respectively. The duration of foraging trips was 26.87 ± 0.81 and 23.87 ± 0.42 minutes from morning until afternoon on cauliflower and cabbage crops respectively.

Each *Apis cerana* worker bee carried a pollen load of 7.0 ± 0.5 and 8.00 ± 0.03 mg at 0900 h, 9.00 ± 0.3 and 10.00 ± 0.03 mg at 1200 h and 5.0 ± 0.5 and 8.0 ± 0.49 mg at 1500 h from cauliflower and cabbage flowers respectively. The ratio between pollen and nectar collectors (P:N) was 7:3 and 6:4 at 0900 h; 5:5 and 5:5 at 1200 h; and 3:7 and 3:7 at 1500 h for cauliflowers and cabbages respectively. No nectar plus pollen collector was observed on either crop. The number of bees per plant was 9 and 3 at 0900 h; 8 and 4 at 1200 h; and 4 and 3 at 1500 h on cauliflowers and cabbages respectively.

The quantitative and qualitative effects of *Apis cerana* pollination are given in Tables 3 and 4. These tables suggest that bee pollination increased the fruit set in cauliflowers by 57 and 20 per cent compared to control and open-pollinated plants. In cabbages the increase in fruit set due to bee pollination was 27 per cent compared to open-pollinated plants. Control plants had no fruit set which means that the cabbage crop was self-incompatible and required cross pollination by honeybees and other natural insect pollinators. Bee pollination increased the number of siliqua per branch by 72.9 and 25.4 per cent respectively compared to control and open-pollinated plants in cauliflowers, whereas, in cabbages, the number of siliqua per branch was increased by 34 per cent in bee-pollinated compared to open-pollinated plants.

The number of seeds per siliqua from bee-pollinated cauliflowers increased by 85 and 25 per cent respectively compared to control and open-pollinated plants. The weight of seeds increased by 38.6 and 27.2 per cent compared to control and open-pollinated plants respectively. In the case of cabbages the number of siliqua and seed weight increased by 32.1 and 33.8 per cent respectively compared to open-pollinated plants. The germination of seeds from bee-pollinated cauliflower plants increased by 16 and 12 per cent respectively compared to control and open-pollinated plants and, in cabbages, germination increased by 28 per cent as a result of bee pollination.

Discussion

The floral biology of cabbage and cauliflower cultivars studied in the present investigations is similar to earlier descriptions by McGregor (1976) and Free (1970). Since cauliflowers start flowering about one month in advance of the end of the winter season in the Kathmandu Valley of Nepal, pollination by domesticated honeybees for this crop is essential, because all other natural insect pollinators are absent during this period. The total flowering period, extending up to one month, suggests that both these crops can be a good source of pollen and nectar for bees during winter time when there is a dearth of bee flora. The yellow flowers of both these crops were found to be quite attractive to *Apis cerana*, despite the fact that both these plants are not native to this region.

It is interesting to note that *Apis cerana* started foraging at environmental temperatures as low as 7°C with a relative humidity of around 95 per cent. Such cold-hardiness in this native bee species offers comparative advantages to farmers for keeping *Apis cerana* for pollination purposes, especially for those agricultural crops which bloom in early spring when outside environmental temperatures are quite low and other insect pollinators are wanting. Adlakha and Dhaliwal (1979) also reported that the native, *Apis cerana*, was a better pollinator of cauliflowers than the exotic, *Apis mellifera*, in India. Foraging activities started early in the morning and ceased in the late evening, enabling *Apis cerana* to forage and pollinate flowers for extended periods of time, i.e., up to 11 hours per day.

It is interesting to note that *Apis cerana* collected a heavier pollen load during the noon hours, and it may be because the maximum number of pollen grains was presented by these cole crops during this time of the day. Thus, noon temperatures (15-21°C) and relative humidity (70-90 per cent) are not only best suited for the peak periods of foraging activities of worker bees (Fig. 1) but also for gathering heavier loads of pollen. This is further evidenced by the fact that top workers (pollen collectors) outnumbered side workers (nectar collectors) during morning and noon hours, and after that the reverse was true. Also the shift in ratio for pollen and nectar collectors during different hours of the day suggests that until noon the pollen collectors outnumbered nectar collectors and the reverse was true in the afternoon. This further supports the view that the maximum amounts of pollen and nectar are presented by these plants during morning and afternoon hours respectively. Earlier Free (1963); Tanda and Goyal (1979); and Jhajj and Goyal (1979) also observed that both *Apis cerana* and *Apis mellifera* collected pollen during the early hours of the day and nectar in the afternoon. In the present investigations, *Apis cerana* either collected pollen or nectar during a single foraging trip but never both. This may be because, in these cole crops, both nectar and pollen are not equally attractive to foragers at the same time and can be attributed to differential productions of these food resources at different hours of the day. Verma and Dulta (1986) also reported similar pollen or nectar collecting behaviour during a single foraging trip by *Apis cerana* on apple crops. For both crops, each worker bee visited 6-8 flowers per minute and, taking into consideration the time spent on each flower (4-6 minutes) plus time taken to shift from one flower to another (2-3 minutes), this average matches the actual number of flowers visited per minute. Earlier Kakkar (1972) also observed that *Apis mellifera* and *Apis cerana* visited 8.05 and 7.6 cauliflower flowers per minute respectively.

BEST AVAILABLE DOCUMENT

Data on the qualitative and quantitative effects of *Apis cerana* pollination showed that, in cauliflowers, bee pollination increased the fruit set by 57 and 20 per cent compared to control and open-pollinated plants respectively. It also increased the number of siliqua and the number of seeds per siliqua by 72.9 and 85 per cent respectively, compared to control, and 25.4 and 25 per cent compared to open-pollinated plants respectively. Similarly, in cabbages, bee pollination increased the fruit set by 27 per cent, the number of siliqua per branch by 34.7 per cent, and the number of seeds per siliqua by 32.1 per cent compared to open-pollinated plants. Seed weight in cauliflowers increased by 38.6 and 27.2 per cent compared to control and open-pollinated plants respectively and in cabbages, seed weight increased by 33.8 per cent compared to open-pollinated plants. No fruit set was observed in the cabbage control plant which means that the crop was self-incompatible and required pollination of its flowers by honeybees and other natural insect pollinators. Bee pollination increased seed germination by 16 and 12 per cent respectively, compared to the control and open-pollinated plants in cauliflowers, and by 28 per cent, compared to open-pollinated plants, in the case of cabbages.

Our results agree with those of Verma and Joshi (1983) who reported that *Apis cerana* pollinated cauliflowers resulted in an increase in bud set (44 7 to 74.2), number of seeds per pod (2.32 to 4.07), and single seed weight (0.19 to 1.17mg) in comparison to pollination by other insects and under control conditions or under self-pollination. Kumar et al. (1988) and Rao et al. (1984) also showed similar results of seed set and seed weight in cauliflowers increasing significantly due to bee pollination. This improvement in the yield and quality, due to cross-pollination, may be because of the effect of heterosis (Verma 1992).

Poor fruit set in bagged plants was due to self-pollination. It means that the crop had some degree of self-compatibility. But the pollen grains transferred by self-pollination were not sufficient to fertilise all the ovules in the ovary, so only a few ovules were fertilised and could produce seeds. These results agree with the earlier observations of Watts (1963) and Haigh (1953) for cole crops. Less fruit and seed set in open-pollinated plants was due to inadequate pollination, because the concentration of pollinating insects was not sufficient in the early spring season when outside environmental temperatures were too low.

Acknowledgements

The authors are thankful to Mr. D.S.Rana, Mr. I.R. Pandey, and Mr. P. K. Thapa of HMG/FAO Vegetable Seed Production Project, Khumaltar, for providing us with the necessary facilities. Financial support by USAID under Grant No. 367-5600-G-SS-1147-00, "Programme in Science and Technology Cooperation," and the ADB Grant for Sustainable Agriculture (RETA-5443) is thankfully acknowledged. The authors are also thankful to Mr. Prem Thapa, beekeeper, for his technical help.

REFERENCES

Adlakha, R.L.; and Dhaliwal, H.S. (1979). Insect pollination of seed cauliflower (*Brassica oleracea* var. *botrytis*) with particular reference to the role of honeybees. *Indian Bee J* 41: 13-16.

Erickson, E.H.; Whitefoot, L.O.; Kissinger, W.A. (1973). "Honeybees: A method of delimiting the complete profile of foraging from colonies". *Envir. Ent.* 2: 531-533.

Free, J.B. (1963). The flower constancy of honeybees. *J. Anim. Ecol.* 32: 119-131.

Free, J.B. (1970). *Insect Pollination of Crops*, pp 135-150. London, UK: Academic Press.

Frisch, K.Von. (1976). *The Dance Language and Orientation of Bees*. Cambridge, MA, USA: Harvard University Press.

Haigh, J.C. (1953). Plant breeding report. *Rep. Natn. Veg. Kes.* Stn. 1, 11-15.

Jhajj, H.S.; Goyal, N.P. (1979). Comparative behaviour of pollen foragers of *Apis cerana indica* and *Apis mellifera*. *J. Apic. Res.* 18: 279-284.

Kakkar, K.L. (1972). Insect Pollinators of Cauliflower Seed Crops and Their Role in Seed Setting. M.Sc. Thesis. H.P. University, Shimla.

Kumar, J; Gupta, J.K.; Mishra, R.C.; Dogra, G.S. (1988) Pollination studies in some cultivars of cauliflower (*Brassica oleracea var. botrytis L.*). *Indian Bee J.*50: 93-95.

McGregor, S.E. (1976). "Insect Pollination of Cultivated Crop Plants. *USAID/ARS Agric. Handbook* 496: 164-168.

Rao, M.; Lazor, G.M.; Suryanarayana, M.C.; Thakur, C.V. (1984). Bees can boost oilseed production. *Indian Bee J.* 46: 33-35.

Tanda, A.S.; Goyal, N.P. (1979). Some observations on the behaviour of *Apis mellifera L* and *Apis cerana indica F.* workers in a field of desi Cotton (*Gossypium arboreum* Linn). *Am. Bee J.* 119: 106.

Verma, L.R. (1990). *Beekeeping in Integrated Mountain Development: Economic and Scientific Perspectives*, pp 367. New Delhi: Oxford and IBH Publishing Co.

Verma, L.R. (1992). *Honeybees in Mountain Agriculture*, pp 274. New Delhi: Oxford and IBH Publishing Co.

Verma, L.R.; Dulta, P.C. (1986). Foraging behaviour of *Apis cerana* and *Apis mellifera* in pollinating apple flowers. *J. Apic. Res.* 25: 197-201.

Verma, S.K.; Joshi, N.K. (1983). Studies on insect pollinators in relation to seed production in cauliflower (*Brassica oleracea var. botrytis L.*). *Indian Bee J.* 45: 52-53.

Watts, L.E. (1963). Investigations into the breeding systems of cauliflower *Brassica oleracea* var. botrytis (L.) studies of self-incompatibility. *Euphytica* 12: 323-340.

94

Table 1. Comparative Floral Biology of Cauliflowers and Cabbages in the Kathmandu Valley, Nepal

Parameter	Cauliflower	Cabbage
No. of flowers per branch	M 600; RV 500-700	M 94; RV 84-106
No. of flowers per plant	M 4,000, RV 3,000-5,000	M 1128; RV 900-1,500
Time of flower opening	Open in the morning and remains open for about 2-3 days	Same as in Cauliflower
Time of flower closing		
Diameter of flower/head (mm)	M 15; RV 12-16	M 14; RV 12-15
Length of bud (mm)	M 9; RV 8-10	M 8; RV 7-9
Total flowering period	One month (mid Feb-mid Mar)	One month (mid Mar-Mid Apr)

M = Mean

RV = Range of variation

95

Table 2: Comparative Foraging Behaviour of *Apis cerana* on Cauliflower and Cabbage Plants in Kathmandu Valley, Nepal

Values are mean ± S.E.

Parameter	Cauliflower	Cabbage
Initiation of foraging (time of day)	0702 ± 0.02	0630 ± 0.02
Cessation of foraging (time of day)	1805 ± 0.02	1835 ± 0.03
Duration of foraging activity (h)	11.03 ± 0.03	12.05 ± 0.05
Peak foraging hours (time of day)	1100 - 1300	1100 ± 1300
Duration of foraging trip (min)	26.87 ± 0.81	23.87 ± 0.42
Time on flower (sec) at		
0900 h	5.83 ± 0.3	4.33 ± 0.21
1200 h	6.69 ± 0.5	4.63 ± 0.32
1500 h	5.14 ± 0.2	6.90 ± 0.24
Time taken to shift from flower to flower (sec) at		
0900 h	2.51 ± 0.1	3.33 ± 0.50
1200 h	3.35 ± 0.3	3.63 ± 0.30
1500 h	2.15 ± 0.1	3.43 ± 0.30
Distance covered from flower to flower (cm) at		
0900 h	9.43 ± 2.0	09.80 ± 2.25
1200 h	9.25 ± 1.1	21.83 ± 1.50
1500 h	9.04 ± 1.5	22.00 ± 3.02
No. of flowers visited per min at		
0900 h	7.0 ± 0.5	7.00 ± 0.40
1200 h	6.0 ± 1.0	7.00 ± 0.50
1500 h	8.0 ± 0.5	5.00 ± 0.50
Pollen load (mg) at		
0900 h	7.0 ± 0.5	08.00 ± 0.03
1200 h	9.0 ± 0.3	10.00 ± 0.01
1500 h	5.0 ± 0.5	08.00 ± 0.49
Ratio between pollen collectors and nectar collectors (P:N) at		
0900 h	7:3	6:4
1200 h	5:5	5:5
1500 h	3:7	4:6
Top vs side workers at		
0900 h	6:4	9:1
1200 h	5:5	7:3
1500 h	4:6	4:6
No. of bees per plant at		
0900 h	9	3
1200 h	8	4
1500 h	4	3
Non-cerana pollinators	Insects such as Eristalis, stingless bees, butterflies, ladybird beetle, etc	Insects such as Eristalis, stingless bees, butterflies, ladybird beetle, etc
Pollen + Nectar collectors (P + N) at		
0900 h	nill	nill
1200 h	nill	nill
1500 h	nill	nill

96

Table 3: Quantitative and Qualitative Effects of *Apis cerana* Pollination on Cauliflower Seeds

Values are mean ± S.E.

Parameter	Control	Open-pollinated	Bee-pollinated	Per cent Increase[1]	Per cent Increase[2]
Per cent Fruit Set	21.0	58.0	78.0	57.0	20.0
No. of Siliqua per Branch	125±1.4	346.8±27.3	464.6±38.6	269.3**	33.9*
No. of Seeds per Siliqua	3.3±1.4	14.8±0.6	19.8±0.5	500**	33.8**
100 seed weight (mg)	264±7	313±8	430±12	62.9**	37.4**
Per cent Germination	80.0	84.0	96.0	16.0	12.0

1. Increase Compared to Control

2. Increase Compared to Open-pollinated

** Significant (P = 0.01)

* Significant (P = 0.05)

91

Table 4: Quantitative and Qualitative Effects of *Apis cerana* Pollination on Cabbage Seeds.

Values are Mean ± S.E.

Parameter	Control	Open-pollinated	Bee-pollinated	Per cent Increase
Per cent Fruit Set	No Fruit Set	52.0	79.0	27.0
No. of Siliqua per Branch	-	49.0 ± 2.7	75.0 ± 2.9	53.1*
No. of Seeds per Siliqua	-	18 ± 0.1	28.3 ± 0.7	52.9*
100 Seed Weight (mg)	-	278.0 ± 4.0	420.0 ± 3.0	51.1*
Per cent Germination	-	56.0	84.0	28.0

* Significant (P = 0.01)

98

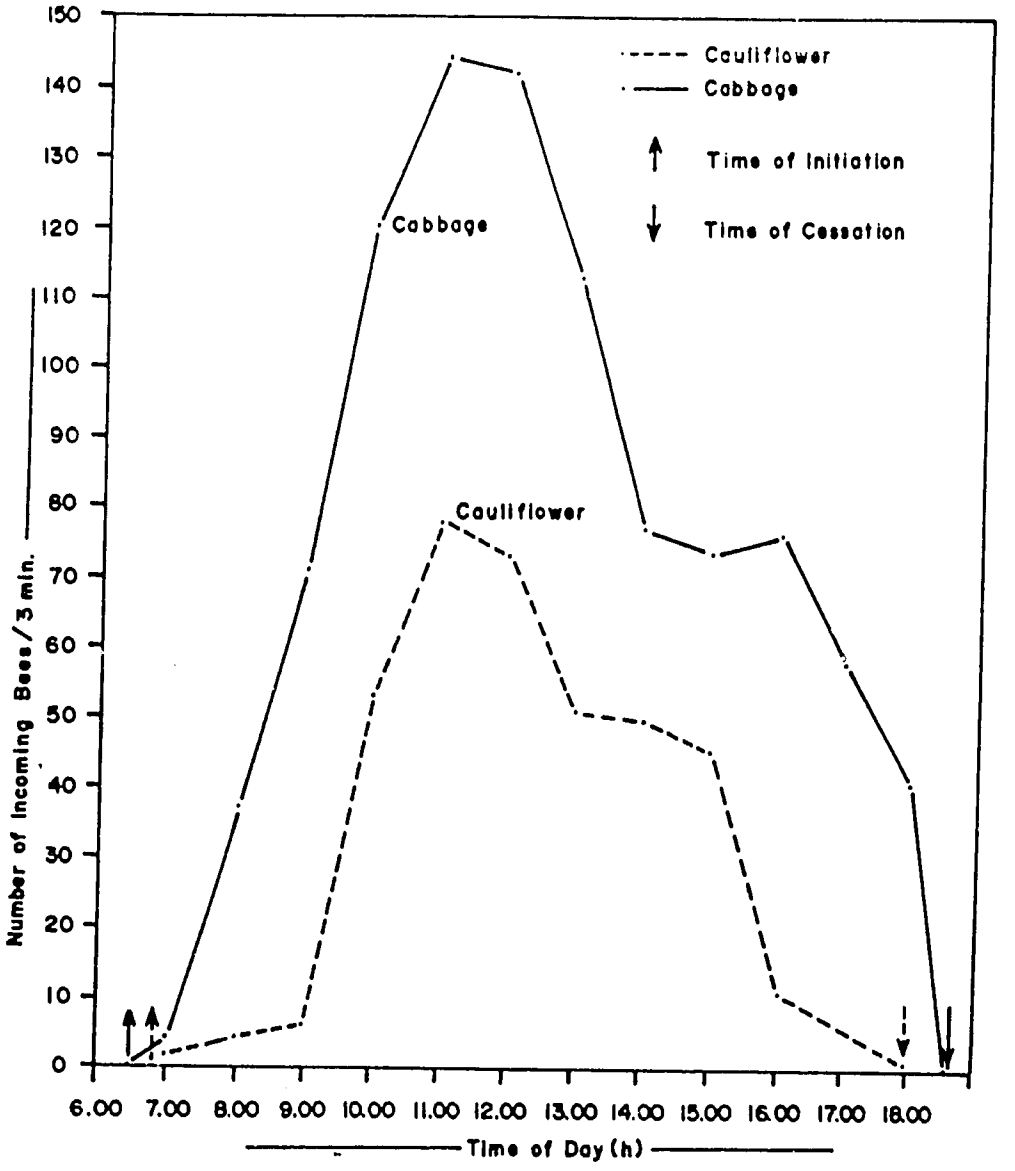

Fig. 1 Peak hours of foraging activity (number of incoming bee/3min) of *Apis cerana* on Cauliflower and Cabbage in Kathmandu Valley.

J. Apic. Res. (in press)

ASIAN HIVE BEE (*APIS CERANA*) AS A POLLINATOR OF THE RADISH FLOWER AND ITS IMPACT ON SEED PRODUCTION

UMA PARTAP AND L.R. VERMA

International Centre for Integrated Mountain Development (ICIMOD) Kathmandu, Nepal

Abstract

Floral biology of the radish (*Raphanus sativus* var. Mino Early) and the foraging behaviour of *Apis cerana* on this crop was studied in Kathmandu valley of Nepal. A radish plant had an average of ten branches and that each branch bore an average of 155.2±18.3 flowers. Each flower was 14.1±1.3 mm in diameter. Flowers opened in the morning and remained open for two to three days. Crop started flowering during first week of March and the total flowering period of the crop lasted for one month.

Worker bees of *Apis cerana* started foraging at 0640 h (26 min after sun rise) in the morning and ceased at 1830 h (18 min after sun set) in the evening. Thus the total duration of foraging activity was 11.50 h. Peak foraging activity was observed between 1100-1400 h. Each worker bee of the *Apis cerana* spent 4.3, 5.3 and 12.8 sec. on each flower, visited 8.0, 9.0 and 5.0 flowers per minute and collected 11, 10 and 7 mg of pollen load during different times of the day, i.e.,0900 (2.46 h after sun rise), 1200 (5.46 h after sun rise), and 1500 h (8.46 h ater sun rise) respectively. Most of the bees collected either pollen or nectar, but some bees (4% during morning and 7% during noon hours) collected both nectar and pollen during the same foraging trip. Bee pollination enhanced pod set, number of seeds per pod, 100 seed weight, and germination by 23.0,42.3,44.5and 32.0 per cent respectively compared to open-pollinated plants. Control plants had no pod set.

100

Introduction

Vegetable seed production offers an opportunity for the commercialization of agriculture. For the production of good quality seeds, sufficient or adequate pollination of vegetable crops is essential. Further, many of these vegetable crops are completely or partially self-incompatible and incapable of pollinating themselves (Tewari and Singh 1983; Verma 1990).

The radish, an important vegetable and salad crop, is widely grown. Like other vegetable crops, many varieties of this crop are self-incompatible and almost entirely cross-pollinated. Therefore, cross-pollination of its flowers through honeybee and other natural insect pollinators is of great significance for seed production. Radchenko (1966) stated that 77-94 per cent of the total radish pollination was primarily by honeybees (*Apis mellifera*) and that bee pollination increased the radish yield by 22 per cent and enhanced seed quality. However, very little work has been carried out on this crop using native *Apis cerana* in the temperate Hindu Kush-Himalayan Region.

In order to fill in the lacunae in research on pollination ecology, field experiments on floral biology, behaviour of *Apis cerana* in relation to pollination, and its impact in enhancing the seed production of the radish crop were studied.

Materials and Methods

Seeds of the radish (*Raphanus sativus* var. Mino Early) were sown on the experimental plots of HMG/FAO Vegetable Seed Production Farm, Khumaltar, Kathmandu (27°40'N and 85°20'E) during the month of September, 1991. The seedlings were transplanted at about one month old on the experimental plots at a plant to plant distance of 50-60 cm and a row to row distance of 70-80 cm. Observations on floral biology were recorded for number of flowers per branch, time of opening and closing of flowers, size of buds and size of flowers, and total blooming period of the crop.

Three sets of pollination experiments were performed when the crop started to bloom in the first week of March.

(i) Control (no insect pollinators)

(ii) Open pollination (only natural insect pollinators)

(iii) Bee pollination

For control purposes, ten branches (one branch each of ten plants with an almost equal number of flowers/buds of almost the same age) were covered with muslin bags so that no insect pollinator could enter the cage to pollinate the flowers. For open-pollinated flowers, observations were taken under natural conditions in which natural insect pollinators could visit the flowers freely. For honeybee-pollinated flowers, 75 plants were covered with a 15 mm long, pollination cage 3 m wide,

and 2-2.5 m high, so that no insect pollinator could enter. Three such pollination cages were used. When 5-10 per cent of the crop was in bloom, a medium-sized colony of *Apis cerana* having seven frames covered with bees and free of any sign of disease was placed in each of the three pollination cages. The bees were kept inside the pollination cage until the end of the flowering period.

Observations on foraging behaviour were recorded for the daily initiation and cessation of foraging, peak hours of foraging activity, duration of foraging trips, the individual bee's choice of nectar or pollen, the weight of pollen carried by a bee, the time spent on each flower, and the number of flowers visited per minute. Observations on such parameters as the weight of pollen load, time spent on the flower and the number of flowers visited per minute by a bee were taken at three different times of the day i.e. 900 (2.46 h after sun rise), 1200 (5.46 h after sun rise) and 1500 h (8.46 h after sun rise).

In order to differentiate between nectar and pollen collectors, returning foragers were collected with the aid of an aspirator at the hive entrance and frozen to prevent regurgitation of nectar. The frozen bees were sorted for the type of forage, following the method of Erickson et al. (1973). Observations were recorded at 0900, 1200, and 1500 h (i.e. 2.46, 5.46, and 8.46 h after sun rise respectively) each day. The peak hours of foraging activity were determined by counting the number of bees entering the hive in a three minute period each hour from early morning until late evening. The weights of pollen loads were determined by anaesthetizing samples of returning bees with carbon dioxide (Frisch 1967), removing their pollen loads, and weighing them. Duration of foraging trip was determined by marking 25 forager bees with nail polish of different colours and noting the times when each of these marked bees leaves the hive for foraging and comes back.

After the crop was ripe, 10 branches each from bagged, open-pollinated, and bee-pollinated plants containing an almost equal number of fruits, were harvested. Changes in the quality and quantity of seeds as a result of bee-pollination were assessed in terms of increase in the number of pods (pod set), the number of seeds per pod, weight of a 100 seeds, and percent germination.

Data were analyzed statistically using analysis of variance.

Results

Each radish plant had an average of ten branches and each branch bore an average of 155.2±18.3 flowers. The white to lilac, cruciferous flowers of the radish were 14.1±1.3mm in diameter. The flowers opened in the morning and remained open for two to three days (Table 1). Each radish flower had four sepals, four cruciform petals, six tetradynamous stamens (four long, two short), and a bicarpellary, syncarpous ovary with a short style and capitate stigma. Four disc-like nectaries were present at the base of the outer small and inner paired stamens. The crop started flowering during the first week of March and continued until the last week of March, thus the total flowering period of the crop lasted one month.

Observations on the foraging behaviour of *Apis cerana* are summarized in Table 2. The worker bees started foraging early in the morning at 06.40±0.02 h and stopped at 18.30±0.02 h in the evening,

BEST AVAILABLE COPY

thus the total duration of foraging activity was 11.50 ±0.04 h per day. Peak foraging activity was observed between 1100-1300 h when the outside temperature ranged between 21°C-25°C and relative humidity ranged between 50 per cent to 78 per cent. Duration of each foraging trip was 22.1±0.03 minutes and each bee made an average of 9 ±1 trips per day.

Each bee spent an average of 4.3 ±0.01, 5.3 ±0.03 and 12.8 ±0.03 seconds on each flower, and visited an average of 8.0 ±0.5, 9.0 ±0.4, and 5.0 ±0.4 flowers per minute during at 0900 (2.46 h after sun rise), 1200 (5.46 h after sun rise), and 1500 h (8.46 h after sun rise) respectively. Each bee collected a pollen load of 11.0±0.2 mg at 0900 h, 10.0±0.5 mg at 1200 h and 7.0±0.5 mg at 1500 h. The number of bees per plant was 9±2, 8±1, and 4±1 at 0900 (2.46 h after sun rise), 1200 (5.46 h after sun rise), and 1500 h (8.46 h after sun rise) respectively.

Pollen collectors (P) outnumbered nectar collectors (N) i.e. P > N at 0900 h (2.46 h after sun rise), the ratio was equal at 1200 h (5.46 h after sun rise) and at 1500 h (8.46 h after sun rise) N > P. Most of the bees collected either nectar or pollen during a single foraging trip, but, a few bees, (four per cent during the morning and seven per cent at noon) collected both pollen as well as nectar during the same foraging trip.

The effects of *Apis cerana* pollination on the quality and quantity of radish crops are summarized in Table 3. Bee pollination significantly enhanced pod set by 23.0 percent compared to open-pollinated plants. The control branches did not set any fruit showing that the crop was self-incompatible and required cross pollination by bees and other natural insects. Bee pollination also increased significantly the number of seeds per pod by 42.3 percent and the weight of a 100 seeds by 44.5 per cent compared to open-pollinated plants. The germination of seeds from bee-pollinated plants was 32 per cent higher compared to open-pollinated plants.

Discussion

Radish crop blooms during spring season in Kathmandu valley of Nepal. Pollination of its flowers is possible by using domesticated honeybees as well as other natural insect pollinators. But during recent years the populations of the natural insect pollinators is decreasing rapidly because of the heavy use of pesticides on agricultural and horticultural crops and the loss of habitat quality and quantity. Therefore domesticated species of honeybee remain the most important crop pollinators. The total flowering period of crop extending upto one month suggests that this crop can be a good source of nectar and pollen to bees.

Results of the present investigation demonstrate that the total duration of foraging activity of *Apis cerana* worker bees was 11.50 h per day. Our earlier studies (Verma and Partap 1993) on the foraging behaviour of *Apis cerana* on other vegetable crops flowering during early spring season also show that duration of foraging activity was 11.03 h on cauliflower and 12.05 h on cabbage during February and March respectively.. The potential for long foraging hours enables honey bees to pollinate a maximum number of flowers per day and makes them efficient pollinators.

BEST AVAILABLE COPY

The peak hours of foraging activity were between 1100 to 1300 h when temperatures varied between 21°C -25°C and relative humidity varied between 50 per cent - 78 per cent (Figure 1), whereas Singh (1979) observed the maximum activity of *Apis cerana* to between 0900 and 1400 h, with only a few bees flying after 1600 h. Worker bees of *Apis cerana* collected heavier pollen loads during morning and noon hours. This might be because the maximum number of pollen grains was presented by this crop during morning and noon hours. Thus the temperature (21-25°C) and relative humidity (50-78%) during these hours are not only best suited for the peak foraging activities of worker bees but also for gathering heavier pollen loads. This is further supported by the fact that P > N during morning hours and N > P during afternoon hours. Another possible reason for this change from pollen to nectar collection during the day might be a depletion of available pollen as foragers collected it in the morning hours.

The qualitative and quantitative effects of *Apis cerana* pollination (Table 3) show that *Apis cerana* pollination increased pod set, seed set, seed weight, and germination percentage of the seeds compared to open-pollinated plants. Increase in fruit set and seed set as a result of bee pollination could be due to sufficient number and the better pollinating efficiency of honeybees. Further, these honeybees could transfer amounts of pollen grain sufficient to pollinate a maximum number of ovules inside the ovary to produce more seeds, thus resulting in increased seed set. Natural insect pollinators, on the other hand, due to their insufficient number, low temperatures at the time of flowering, and poor pollinating efficiency, could not pollinate a sufficient number of flowers. This resulted in low fruit and seed set. Similar studies made by us for other vegetable crops such as cauliflower and cabbage in Kathmandu valley (Verma and Partap 1993) have shown that bee pollination increased the yield and enhance the quality of seeds of these crops.

The quality of seeds can be assessed by their weight and germination efficiency. Bee pollination increased 100 seed weight and seed germination by 44.5 and 32.0 per cent compared to open-pollinated plants (thus producing better quality seeds). The improvement of seed quality as a result of bee pollination might be a result of heterosis. No fruit set in the control (bagged) branches means that the crop was self-incompatible and required cross-pollination by honeybees and other natural insect pollinators.

ACKNOWLEDGEMENTS

The authors are thankful to Mr. D.S. Rana, Mr. I.R. Pandey, and Mr. P.K. Thapa of the HMG/FAO Vegetable Seed Production Project, Khumaltar, Kathmandu, Nepal, for providing necessary facilities. Our thanks go to Prem Thapa, Beekeeper, for his technical help. The study was financed by the USAID under Grant No: 367-5600-G-SS-1147-00, Programme in Science and Technology Cooperation and an ADB Grant for Sustainable Mountain Agriculture (RETA - 5443). Support for carrying out the present work is thankfully acknowledged.

BEST AVAILABLE COPY

LITERATURE CITED

Erickson, E.H., Whitefoot L.O.; and Kissinger W.A. (1973). Honeybees: A method of delimiting the complete profile of foraging from colonies. *Envir. Ent. 2* : 531-535.

Frisch, K. Von. (1967). The dance language and orientation of bees. *Cambridge, MA, USA: Harvard University Press.*

Radchenko T.H. (1966). Role of honeybees as pollinators in increasing the seed crop from cabbage and radish. *Bdzhilnitstvo 2* : 72-74.

Singh, Y. (1979). Pollination activity on strawberry at Jeolikote. (Distt. Nainital, India). *Indian Bee J. 41:* 17-19.

Tewari, G.N.; Singh K., (1983). Role of insect pollinators in vegetable seed production. *Indian Bee J. 45* : 51.

Verma, L.R. (1990). Beekeeping in Integrated Mountain Development: Economic and Scientific Perspectives, pp. 367. New Delhi: Oxford and IBH Publishing Co.

Verma, L.R. and Partap, U. (1993). Asian Hive Bee *Apis cerana* as a Pollinator in Vegetable Seed Production. An Awareness Handbook. ICIMOD Publication pp 52.

BEST AVAILABLE COPY

Table 1: Floral Biology of Radish in the Kathmandu Valley, Nepal. Values are Mean ±S.E.

No. of branches per plant	10.0±2.0
No. of flowers per branch	155.2±18.3
Time of flower opening	Open in the morning and remains open for about three days
Time of flower closing	
Diameter of flower (mm)	14.1±1.3
Total flowering period	One month (March 1st week to March last week)

Table 2: Foraging Behaviour of *Apis cerana* on Radish Plants in the Kathmandu Valley, Nepal. Values are Mean ± S.E.

Parameter	Mean Value
Initiation of foraging (time of day)	06.40 ± 0.02
Cessation of foraging (time of day)	18.30 ± 0.02
Duration of foraging activity (h)	11.50 ± 0.04
Peak foraging hours (time of day)	1100 - 1300
Duration of foraging trip (min)	22.1 ± 0.03
Time spent on flower (sec)	
0900 h (2.46 h after sun rise)	4.3 ± 0.06
1200 h (5.46 h after sun rise)	5.3 ± 0.03
1500 h (8.46 h after sun rise)	12.8 ± 0.03
No. of flowers visited per minute	
0900 h (2.46 h after sun rise)	8.0 ± 0.5
1200 h (5.46 h after sun rise)	9.0 ± 0.4
1500 h (8.46 h after sun rise)	5.0 ± 0.5
Pollen load (mg)	
0900 h (2.46 h after sun rise)	11.0 ± 0.2
1200 h (5.46 h after sun rise)	10.0 ± 0.5
1500 h (8.46 h after sun rise)	7.0 ± 0.5
Ratio between pollen-collectors and nectar-collectors (P:N)	
0900 h (2.46 h after sun rise)	6:4
1200 h (5.46 h after sun rise)	5:5
1500 h (8.46 h after sun rise)	3:7
No. of bees per plant	
0900 h (2.46 h after sun rise)	5 ± 1
1200 h (5.46 h after sun rise)	9 ± 1
1500 h (8.46 h after sun rise)	4 ± 1
Pollen + Nectar collectors (P+N)	
0900 h (2.46 h after sun rise)	4%
1200 h (5.46 h after sun rise)	7%
1500 h (8.46 h after sun rise)	nil

Table 3: Quantitative and Qualitative Effects of *Apis cerana* Pollination on Radish Seeds Values are Mean ± S.E. Data were Analyses Statistically Using Analysis of Variance.

Parameter	Control	Open-Pollinated	Bee Pollinated	Percentage Increase	Values of F and Degrees of Freedom
% Pod Set	No Pod Set	51.2±4.9	74.2±4.4	23.0	F=136.29 df_1 =1;df_2=18
No. of Seeds per Pod	-	5.2 ±0.4	7.4 ±0.3	42.3	F=85.60 df_1 =1;df_2=38
100 seed Wt. (mg)	-	1276 ±4	1844 ±7	44.5	F=497.03 df_1 =1;df_2=18
Per cent Germination of Seeds	-	44.0±3.4	76.0±3.6	32.0	F=642.92 df_1 =1;df_2 =18

df_1 degrees of freedom for numerator
df_2 degrees of freedom for denominator

Differences in pod set, number of seed per pod, 100 seed weight and germination between open pollinated and bee pollinated are significant ($P<0.01$).

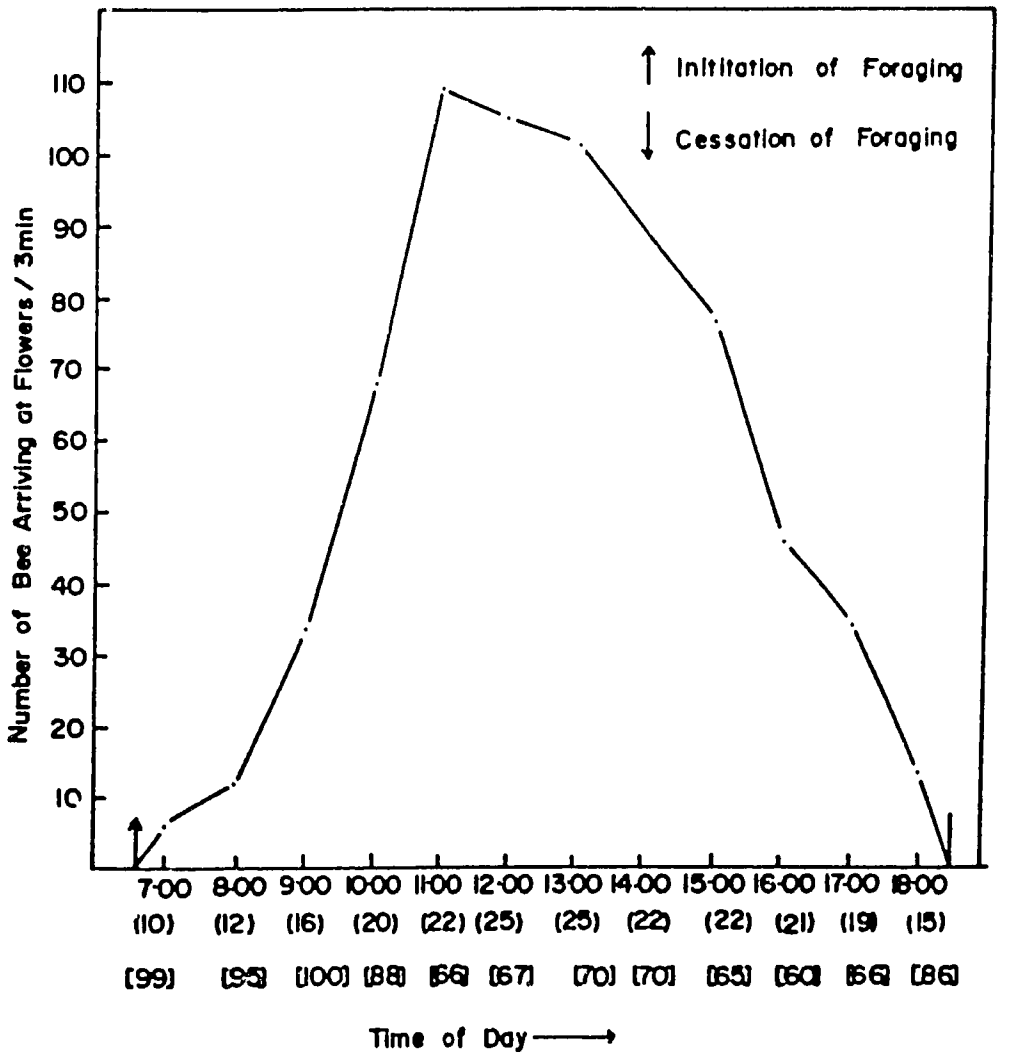

Fig.1 Initiation, cessation and peak hours of foraging activity (number of incoming bees arriving at flowers/3 min) of *Apis cerana* on Radish flower in Kathmandu valley (27°40'N, 85°20'E). Temperature (°C) and relative humidity [%] are given in parenthesis.

Progressive Hortic. (in press)

Comparative Foraging Behavior of *Apis cerana* and *Apis mellifera* in Pollinating Indian Mustard (*Brassica juncea* var Khumal Broad Leaf) Flower in Kathmandu Valley, Nepal

Uma Pratap and L.R. Verma

International Centre for Integrated Mountain Development (ICIMOD)
P.O. Box 3226, Kathmandu. Nepal

Summary

Floral biology and comparative foraging behavior of *Apis cerana* and *Apis mellifera* on Indian mustard (*Brassica juncea* var Khumal Broad Leaf) was studied in Kathmandu valley, Nepal. An Indian mustard plant had an average of 10 branches and each branch bore an average number of 1300 bright yellow flowers which opened in the morning and remained open for 3-4 days. Each flower was 10 mm in diameter and a bud 6 mm long. Total flowering period of the crop lasted for about 6 weeks.

Worker bees of *Apis cerana* started foraging on Indian mustard flower early in the morning at 0626 h and ceased late in the evening at 1821 h as compared to *Apis mellifera* worker bees which started foraging activity at 0649 h and ceased at 1811 h. Thus, the duration of foraging activity for *Apis cerana* was 11.55 h; significantly more than that for *Apis mellifera* (11.22 h). The duration of an individual foraging trip by *Apis cerana* was (23.24 min) significantly shorter than for *Apis mellifera* (25.29 min). The peak foraging activity of *Apis cerana* occurred between 1200-1300 h for and *Apis mellifera* it occurred between 1300-1400. The differences between the two species were not significant for parameters such as time spent on each flower, time taken to shift from flower to flower, number of flowers visited per minute and number of bees foraging on each plant at a time.

In both species nectar collectors (N) outnumbered pollen collectors (P) throughout the day except at 1200 h when P>N in *Apis mellifera*. P:N ratio varied considerably with the time of the day and between species at different hours of the day. Worker bees of *Apis mellifera* carried significantly heavier pollen loads than that of *Apis cerana*.

110

Introduction

Indian Mustard *(Brassica juncea* var Khumal Broad Leaf) is widely grown in Kathmandu valley of Nepal for its leaves and tender shoots which are used as vegetable. The crop is self compatible and its flowers self-pollinated, however, some amount of cross pollination has also been reported (Free and Spencer-Booth, 1963; Free, 1970; McGregor, 1976).

Cross pollination of its flower is brought about by insect pollinators which visit mustard flower for pollen as well as for nectar. Among the pollinating insects honey bees in particular are attracted to it and are reported to be of great benefit (Free and Spencer-Booth, 1963). The flowers of this plant are quite attractive to both *Apis cerana* and *Apis mellifera* and good source of both pollen and nectar.

In the present investigation we have compared the foraging behavior of two honeybee species; the native bee *Apis cerana* and the exotic bee *Apis mellifera* on Indian mustard crop in order to assess the role of these two bee species as pollinator. Such studies assume great importance under the local ecological conditions of Kathmandu valley where *Apis mellifera* has been recently introduced from India.

Materials and Methods:

Floral biology of Indian mustard plant *(Brassica juncea* var Khumal Broad Leaf) and the foraging behavior of *Apis cerana* and *Apis mellifera* on its flowers was studied during February-March, 1993 at Kathmandu valley of Nepal. The crop was raised under standard agronomic practices.

Observation on the floral biology of Indian mustard crop was recorded for the number of flowers per plant, time of opening and closing of flower, size of buds and flowers, and total blooming period of the crop.

In order to study the foraging behavior of *Apis cerana* and *Apis mellifera* on Indian mustard flower 4 colonies (2 colonies each of *Apis cerana* and *Apis mellifera)* each containing 7 frames of worker bees and free of any sign of disease were placed in the centre of field at the stage of 10-15 percent flowering. Thus the bees should have foraged only on Indian mustard flowers and ignored the alternative forage in the vicinity of the field. Bees were kept in the field till the end of the flowering of the crop.

Observations on the foraging behavior of both bee species (*Apis cerana* and *Apis mellifera)* were recorded for the daily time of initiation and cessation of foraging, total duration of foraging activity, individual bee's choice of pollen and nectar, weight of pollen load carried by an individual bee, time spent on the flower and number of flowers visited per minute. For other logistics of foraging behavior studies, methods given by Verma and Dulta (1986) were followed. Observations on such parameters of foraging behavior and time spent on flower, time taken to shift from flower to flower, number of flowers visited per min, pollen loads collected and pollen vs. nectar collectors were recorded at 0900, 1200 and 1500 h.

In order to differentiate between nectar and pollen collectors, returning foragers were collected with the aid of an aspirator at the hive entrance and frozen to prevent regurgitation of nectar. The frozen bees were sorted for the type of forage following the method of Erickson et. al (1972). Observations were taken at 0900, 1200 and 1500 h of each day. Peak hours of foraging activity were determined by counting the number of bees entering the hive in a 3 minute period of each hour from early morning until late evening. Weights of pollen loads were determined by anaesthetizing samples of returning bees with carbon dioxide (Frisch 1967) and removing their pollen loads with a fine camel hair brush and weighing them. In order to determine the number and duration of foraging trip, 20 bees were marked with the nail polish of different colors and observations were recorded for the individual marked bee.

Data were analyzed statistically using standard errors of mean and student's 't' test.

Results

Table 1 shows the floral biology of the crop. The plant had an average number of 10 (range 8-12) branches and each branch bore an average number of 1300 (range 1000-1500) flowers. Flowers opened in the morning and remained open for about 3-4 days. Flower was 10 mm in diameter and bud was 6 mm long. It was bright yellow in color having 4 sepals, 4 cruciform petals, six stamens (2 short, 4 long) and one capitate stigma. Flowering of the crop started in mid-February till the end of the March. Thus total flowering period of the crop lasted for about six weeks.

Comparative Foraging Behavior of *Apis cerana* and *Apis mellifera* on Indian Mustard (*Brassica juncea*, var Khumal Broad Leaf) is presented in Table 2. *Apis cerana* began foraging earlier in the morning (mean time 0626 h) than *Apis mellifera* (mean time 0649 h). In the evening *Apis mellifera* stopped earlier (mean time 1811 h) than *Apis cerana* (mean time 1821 h). The average duration of foraging activity was 11.55 h for *Apis cerana* and 11.22 hours for *Apis mellifera*. Differences in all three parameters were significant at $P<0.01$.

The duration of an individual foraging trip by *Apis cerana* was 23.24 Ý 0.22 min., significantly shorter ($P<0.01$) than the time of 25.29 Ý 0.57 min. for *Apis mellifera* (Table 2).

Both species of honeybee did not differ significantly in behavioral characteristics such as time spent while foraging on each flower and time taken to shift from one flower to another, number of flowers visited on each plant at a time (Table 2).

Nectar collectors outnumbered pollen collectors ($P<0.01$) for both species throughout the day, except at 1200 h in *Apis mellifera* when pollen collectors were significantly more than nectar collectors. The ratio of nectar collectors to pollen collectors varied considerably with the time of day and between species at different times of the day (Table 3). For *Apis cerana*,

more bees were collecting nectar than pollen at 1500 and 1200 h; whereas, for *Apis mellifera*, nectar collectors were more numerous at 0900 and 1500 h, pollen foragers of *Apis mellifera* outnumbered those of *Apis cerana* at 0900, 1200, and 1500 h.

The peak of activity for *Apis cerana* (mean number of incoming bees/ three minutes) occurred between 1200 - 1300 hours when the temperature was 25.8 to 27.4°C; relative humidity range 52.2 to 58.4; and, for *Apis mellifera*, it occurred between 1300 to 1400 hours when the mean outside temperature was 25.6 to 27.4°C and the relative humidity ranged from 52.2 to 56.6 per cent (Figure 1).

Discussion

Floral biology of Indian mustard studied in present investigation is similar to that described earlier by McGregor (1976). Since this plant flowers in early spring/late winter in Kathmandu valley of Nepal, pollination of its flowers by domesticated species of honeybees (*Apis cerana* and *Apis mellifera*) is essential because all other natural insect pollinators are absent during this period due to low temperatures. The bright yellow flowers of this crop were found quite attractive to both species of honeybees. The total flowering period of this crop extending up six weeks shows that the crop is a good source of pollen and nectar for bees during early spring season when there is a dearth of other bee flora.

The comparative foraging behavior data (Table 2) suggests that the worker bees of *Apis cerana* started their foraging activities earlier in the morning and ceased late in the evening as compared to those of *Apis mellifera*. Thus the total duration of foraging activity of *Apis cerana* worker bees is significantly more than those of *Apis mellifera*. This enables *Apis cerana* worker bees to forage and pollinate flowers for extended period of time as compared to *Apis mellifera*, i.e. 11.55 hours per day for *Apis cerana* and 11.22 hours per day for *Apis mellifera*. Verma and Partap (1993) observed that the duration of foraging activities of *Apis cerana* was 12.1 h on cabbage and 11.03 n on cauliflower during March.

The differences that were observed between the species with respect to the time of initiation and peak hours of foraging activity agree with those of Verma and Dulta (1986). These differences in foraging preferences may have reflected the differences in temperature and relative humidity preferences. The mean duration of an individual foraging trip (Table 2) was significantly longer for *Apis mellifera* (mean time 25.29 min.) than *Apis cerana* (mean time 23.24 min.). These differences might be attributable to a difference in the foraging efficiency, and glycogen supply to the flight muscle. *Apis mellifera* has more glycogen for fuel than *Apis cerana* (Dulta and Verma, 1989). The number of flowers visited per minute by an *Apis mellifera* worker bee was more as compared to that by *Apis cerana* worker bee, however, this difference was not statistically significant. Similar results were found by Kakkar (1972) who showed that number of flowers visited per minute by an *Apis mellifera* worker bee was 8.05 and by *Apis cerana* was 7.6 on cauliflower crop.

The peak foraging activity of *Apis mellifera* begins after the peak foraging activity of *Apis cerana* decreases. Verma and Dulta (1986) reported similar findings on peak foraging activities of these two bee species on apple flower. Verma and Partap (1993) observed maximum activity of *Apis cerana* between 1100 and 1300 on cauliflower and cabbage in Kathmandu valley, Nepal during Feb-March. The difference in peak hours between the species can be exploited in a better way and both these species can be used simultaneously for the pollination of the same crop. In this way the length of daily period of foraging could be increased and pollination of the crop could be improved.

The heavier pollen loads carried by *Apis mellifera* compared to that carried by *Apis cerana* may be related to the larger size of body parts already reported for the former species (Mattu and Verma, 1980; 1983; 1984 a, b, c. Free (1970) and Kendall and Solomon (1973) observed that the insects with smaller body parts carry little pollen compared to the larger, hairy-bodied insects.

Nectar collectors outnumbered pollen collectors in both the species except for 1200 h when pollen collectors outnumbered nectar collectors in *Apis mellifera* (Table 3). Our results agree with those of Verma and Dulta /(1986) who reported similar pollen or nectar collecting behavior of bees during a single foraging trip on apple flowers. In the present investigation, worker bees of both the species either collected pollen or nectar but not both during the same foraging trip. This may be because in this crop both nectar and pollen are not equally attractive to foragers at the same time. Our earlier studies (Verma and Partap 1993) showed that *Apis cerana* when visiting cauliflower and cabbage collected either pollen or nectar but never both on an individual foraging trip. Similar observations were recorded by Free (1960) for *Apis mellifera*.

Acknowledgements:

Authors are thankful to Mr. D.S. Rana and Mr. L.N. Devkota of HMG/FAO Vegetable Seed Production Project, Khumaltar, Kathmandu for providing necessary facilities. Authors are also thankful to Mr. Prem Thapa, Beekeeper, for his technical help. Financial support by USAID under Grant No. 367-5600-G-SS-1147-00 Programme in Science and Technology Co-operation in carrying out the work is thankfully acknowledged.

BEST AVAILABLE COPY

References

Dulta, P C; Verma, L R (1989) Biochemical studies on flight muscles of the genus *Apis*. *J Apic Res* 28, 136-141

Erickson, E H; Whitefoot, L O; Kissinger, W A (1973) Honeybees: A method of delimiting the complete profile of foraging from the colonies. *Envir Ent* 2, 531-533

Free, J B (1960) The behavior of honeybees visiting flowers of fruit trees. *J Anim Ecol* 29, 385-395

Free, J B (1970) Insect Pollination of Crops. pp 148-149. Academic Press, London, UK

Free, J B, Spencer-Booth, Y (1963) The pollination of mustard honeybees. *J Apic Res* 2, 69-70

Frisch, K Von (1967) The Dance Language and Orientation of Bees. Cambridge, MA, USA: Harvard University Press

Kendall, D A; Solomon, M E (1973) Quantities of pollen on the bodies of insects visiting apple blossom *J Appl Ecol* 10, 627-634

Mattu, V K; Verma, L R (1980) Comparative morphometric studies on introduced European bee *Apis mellifera L.* and *Apis cerana indica* F. in Himachal Pradesh. *Proc Z Int congr Apic Trop Clim New Delhi* 262-277

Mattu, V K; Verma, L R (1983) Comparative morphometric studies on Indian honeybee of north-west Himalayas 1. Tongue and antenna. *J Apic Res* 22, 79-85

Mattu, V K; Verma, L R (1984a) Comparative morphometric studies on Indian honeybee of north-west Himalayas 2. Wings. *J Apic Res* 23, 3-10

Mattu, V K; Verma, L R (1984b) Comparative morphometric studies on Indian honeybee of north-west Himalayas.3. Hindleg, tergites and sternites. *J Apic Res* 23, 117-122.

Mattu, V K; Verma, L R (1984c) Morphometric studies on Indian honeybee, *Apis cerana* F. Effect of seasonal variations *Apidologie* 15, 63-74.

Verma, L R (1990) *Beekeeping in Integratd Mountain Development: Economic and Scientific Perspectives.* Oxford and IBH Publishing Co. New Delhi, India pp 367

Verma, L R (1992) *Honeybees in Mountain Agriculture.* Oxford and IBH Publishing Co. New Delhi, India. pp 274

Verma, L R; Dulta, P C (1986) Comparative foraging behavior of *Apis cerana* and *Apis mellifera* in pollinating apple flowers. *J Apic Res* 25, 197-201

Verma, L R and Partap, U (1993) Foraging behavior of *Apis cerana* on cauliflower and cabbages and its impact on seed production. J Apic Res (In press).

Table 1. Floral Biology of Indian Mustard in Kathmandu Valley, Nepal. The data based on ten observations.

Parameter	Mean	Range of Variation
No. of flowers per branch	1300	1000-1500
No. of flowers per plant	13070	10800-15400
Time of flower opening	Open in the morning and remain open for 3-4 days	
Time of flower closing		
Diameter of flower (mm)	10	9-11
Length of bud (mm)	6	5-7
Total flowering period	About six weeks (i.e. middle of February to late March)	

Table 2: Comparative Foraging Behavior of *Apis cerana* and *Apis mellifera* on Indian Mustard flowers during February/March in the Kathmandu Valley, Nepal. The data are based on ten observations.

Parameter	*Apis cerana*	*Apis mellifera*
Initiation of foraging (time of day)	0626 ±0.65	0649 ±0.65**
Cessation of foraging (time of day)	1821 ±0.36	1811 ±0.35**
Duration of foraging activity (h)	11.55 ±0.92	11.22 ±0.57**
Peak foraging hours (time of day)	1200 - 1300	1300 - 1400**
Duration of foraging trip (min)	23.24 ±0.22	25.29 ±0.57**
Time spent on flower (sec)		
0900 h	3.23 ±0.15	3.22 ±0.22
1200 h	2.75 ±0.16	3.06 ±0.16
1500 h	2.75 ±0.15	2.74 ±0.16
Time taken to shift from flower to flower (sec)		
0900 h		
1200 h	1.96 ±0.17	1.81 ±0.17
1500 h	1.75 ±0.13	1.61 ±0.13
	1.64 ±0.13	1.61 ±0.11
Number of flowers visited per min.		
0900 h	11.65 ±0.29	12.20±0.37
1200 h	11.68 ±0.57	13.43±0.52
1500 h	13.75 ±0.52	14.23±0.39
Pollen loads (mg)		
0900 h	13.05 ±0.48	21.14±1.00**
1200 h	12.05 ±0.62	23.58±0.62**
1500 h	13.57 ±0.46	25.74±0.70**
Number of bees per plant.		
0900 h	2	2
1200 h	3	4
1500 h	3	3

For times of initiation; cessation and duration of foraging activity, duration of foraging trip; and weights of pollen loads, differences between species are significant ($P < 0.01$).

Table 3: Percentage of *Apis cerana* and *Apis mellifera* Honeybees Collecting Pollen, Nectar and Both from Indian Mustard Flowers during Different Hours of the Day in March in the Kathmandu Valley, Nepal. The data are based on ten observations.

	0900 h		1200 h		1500 h	
Forager	*cerana*	*mellifera*	*cerana*	*mellifera*	*cerana*	*mellifera*
P	17	39	29	60	11	38
N	38	61	71	40	89	62
PN	0	0	0	0	0	0
P:N	1.0:4.9	1.0:1.6	1.0:2.4	1.5:1.0	1.0:8.1	1.0:1.6

P<N at 0900 h, 1200 h, and 1500 h for *Apis cerana* and at 0900h and 1500h for *Apis mellifera* (at P<0.01)

P<N at 1200 h for *Apis mellifera* (at P<0.01)

P = Pollen collectors

N = Nectar collectors

PN = Pollen plus nectar collectors

P:N = Ratio between pollen and nectar collectors

Progressive Hortic. (in press).

VEGETABLE SEED PRODUCTION USING HIMALAYAN HONEY BEE (*APIS CERANA* F.) AS POLLINATOR IN KATHMANDU VALLEY : INDIAN MUSTARD

UMA PARTAP AND L.R. VERMA

International Centre for Integrated Mountain Development (ICIMOD)
P. O. Box 3226, Kathmandu, Nepal,

SUMMARY

The objective of the study was to verify use value of honey bees for pollinating Indian mustard crop, grown widely by the vegetable growers of Kathmandu valley. It focussed on the effects of pollination on the seed yield and quality of Indian mustard under agroclimatic conditions of Kathmandu valley in Nepal. The plants under observation had an average of 10.1 branches and each branch bore an average of 1300 flowers. Flowers opened in the morning hours only just for 2-3 days. Average diameter of the flower was 10 mm and buds 6 mm long. Crop started blooming during February and the total flowering period of crop lasted for 6 weeks.

Bee pollination enhanced fruit set, in the crop by 6.1 and 5.2 percent as compared to control and open pollinated plants respectively. It increased the number of seeds per fruit by 38 and 14.2 percent and seed weight by 48.4 and 17 percent as compared to control and open pollinated plants respectively. Bee pollination also enhanced the germination of seeds by 19.4 and 13.4 percent compared to control and open pollinated respectively.

INTRODUCTION

Successful vegetable farming depends much on the availability of good quality seeds. The production of such quality seeds depends upon the sufficient or adequate pollination of these vegetable crops. Further, many of these vegetable crops are completely or partially self-incompatible and incapable of pollinating themselves (Tewari and Singh 1983, Verma, 1990). Cross-pollination of their flowers by insects pollinators is, therefore, essential.

Honeybees are most efficient pollinators of several cultivated and wild plants. Among different species of honeybee, *Apis cerana* is of great importance to beekeeping and pollination even outside its range because of following factors;

(i) This is the only domesticated native bee species and is an integral part of cultural and natural heritage of rural communities in the developing countries of south and south east Asia.

(ii) Beekeeping with European honeybee *Apis mellifera* is facing serious constraints because of parasitic bee mites and fiercely stinging Africanized bees (Verma 1990;1992).

A large volume of literature , available on the effect of bee pollination on the yields of various crops (Deodikar and Suryanarayana, 1972; 1973; 1977; Free, 1970; McGregor, 1976; Verma, 1990, 1992), indicates that increase in crop yields due to bee pollination varies from place to place. The variations of impact on yield and quality of seeds, may even be more pronounced in the hilly areas, where the agroclimatic conditions vary greatly from place to place, thus affecting floral biology of the plants and pollinating efficiency of honey bees. This point emphasizes the need for area based studies on the use of honey bees for pollination.

It is against this background, we have studied in detail the role of the native honey bee species (*Apis cerana*)in enhancing the yield of Indian mustard. It is a commonly grown vegetable crop in the Kathmandu valley of Nepal.

MATERIALS AND METHODS

Seedlings of Indian mustard (*Brassica juncea* var. Khumal Broad Leaf) were raised in the experimental plots of HMG/FAO Vegetable Seed Production Farm, Khumaltar in Kathmandu valley of Nepal during August/September 1992. About one month old seedlings were transplanted in the experimental plots at a plant to plant distance of 50-60 cm and row to row distance of 80-90 cm. Crops started blooming during February 1993.

Observations on floral biology of the crop were recorded for the number of flowers per branch, time of opening and closing of flowers, size of flowers and buds and total blooming period of crop.

Following three sets of experiments were performed when the crop started blooming during February;

i. Control (insect pollinators excluded by cages): For control, ten plants with almost equal number of floral buds of almost same age were covered with a cage (3m long x 3m wide x 2m high) so that no insect pollinator can enter into the cage to pollinate flowers.

ii. Open-pollinated in field (natural insect pollinators including free-ranging honeybees) For open-pollinated flowers, observations were made concerning natural conditions in which all natural insect pollinators could visit the flowers freely.

iii. Bee pollinated in cages: For honeybee pollinated flowers about 100 plants were covered with a pollination cage (15m long x 3m wide x 2.5m high) so that no natural insect pollinator could enter in the cage. When about 10 percent of the crop was in bloom, a medium sized colony of *Apis cerana* with 7 frames covered with bees free of any sign of disease (about 6000-7000 adult workers) was placed in the cage. The cage size was quite big and in such a large sized cage we observed the normal behavior of bees without any mortality. The bees were kept inside the cage till the end of the flowering period.

After the crop was ripe, 10 branches each from the control, open pollinated and bee pollinated plants containing almost equal number of fruits were collected. Changes in the quality and quantity of the seeds due to bee pollination were assessed in terms of increase in fruit set, seed set and seed weight. Seed yield per hectare (kg) was estimated by the following formula

$$\frac{\text{No. of plants/hectare} \times \text{No. of branches/plant} \times \text{No. of flowers/branch} \times \text{Percent fruit set} \times \text{No. of seeds/fruit} \times \text{Wt. of a seed Average}}{100 \times 100} = Y \text{ kg}$$

To determine the effect of bee pollination on seed germination, 100 seeds of uniform size each from control, open-pollinated and bee-pollinated plants were germinated in petridishes (9" in diameter) under room temperature. Number of germinated seed was counted after 72 in each case because the number of seeds germinated after 72 h was maximum. No more seeds germinated after 72 h. Three sets of experiments were performed and experiments were repeated twice.

Data were analyzed statistically using standard error about the means, students' 't' test and chi square test

RESULTS

The floral biology of the crop is given in Table 2. An Indian mustard plant had an average number of 10.1 branches and each branch bore an average number of 1300 flowers. Flowers opened in the morning and remained open for 2-3 days. The average diameter of flower was 10mm and the buds 6 mm long. Crop started blooming during February and the total blooming period of crop lasted for about 6 weeks. Temperature varied between 9°C to 27.4°C and relative humidity varied between 52.2 to 9.7 percent (Table 1) at different hours of the day during the blooming period of the crop.

Qualitative and quantitative effects of bee (*Apis cerana*) pollination on Indian mustard crop are presented in Table 3. Bee pollination enhanced fruit set by 6.1 and 5.2 percent as compared to control and open pollinated plants. It also increased the number of seeds per siliqua by 38 and 14.2 percent as compared to control and open pollinated plants. A siliqua from bee pollinated plant had an average number of 11.7 seeds whereas that from control and open pollinated plants had 8.5 and 10.3 seeds respectively.

Bee pollination enhanced the seed yield per hectare by 36 percent as compared to control and 34.6 percent as compared to open pollinated plants. Estimated seed yield per hectare in control was 260.5 kg, in open pollinated 263.4 kg and in bee pollinated plants it was 354.3 kg per hectare (Table 3).

Bee pollination also improved the seed quality in terms of seed weight and seed germination. Seeds produced by the plants, cross pollinated by *Apis cerana* were consistantly heavier than those produced by control or open pollinated plants. It enhanced seed weight (taken as 100 seed weight) by 48.4 and 17 percent and seed germination by 19.4 and 13.4 percent as compared to control and open pollinated plants respectively (Table 3).

DISCUSSION

Indian mustard crop blooms in early spring season in Kathmandu valley of Nepal. Pollination of its flowers is possible only through using domesticated honeybees because all other natural insect pollinators are absent at that time. The total flowering period of the crop extends upto four to six weeks. It suggests that this crops can be a good source of pollen and nectar to bees. Bright yellow flowers are quite attractive to bees during early spring season when there is a dearth of bee flora.

Our earlier studies (Verma & Partap, 1993a) have reported foraging behaviour of *Apis cerana* in relation to pollination of this crop. This study revealed that pollination of the crop using *Apis cerana* could benefit farmers by increasing the yield and quality of seeds. Seed characters positively influenced by pollination include, fruit set, seed set, seed weight and seed germination. Similar studies done by us for other vegetable crops in Kathmandu valley (Verma and Partap, 1993a) have shown that bee pollination increased the seed yield and enhanced the quality of vegetable crops, such as cauliflowers, cabbage, radish and lettuce.

Apis cerana pollination increased the seed yield in cauliflower by 246.3 and 157.2 percent as a compared to control and open pollinated and in cabbage by 266.7 percent as compared to open pollinated (Verma and Partap, 1993a).

Reports of other workers (Deodikar and Suryanarayana, 1972; 1973; 1977) do support increase in seed yields of mustard by 13-222 percent because of bee pollination. Free and Spencer-Booth (1963) did study bee pollination effects on the Indian mustard and reported 14 percent increase in seed yield.

Our results showing positive effect of bee pollination on fruit set and seed quality in the Indian mustard, are of much significance to the vegetable growing farmers of mid-hill region of Nepal, where most of vegetable cultivation is presently concentrated. For example bee pollination increased the estimated seed yield/ha by about 93 kg as compared to control and 91 kg as compared to open pollinated crop (Table 3).

Poor fruit set in bagged plants was due to self-pollination indicating that the crop had some degree of self-compatibility. The pollen grains transferred by self-pollination were not sufficient to fertilize all the ovules in the ovary, so only a few ovules produced seeds. Less fruit and seed set in open-pollinated plants was due to inadequate pollination, because the concentration of pollinating insects was not sufficient in the early spring season when outside environmental temperatures were too low.

Bee pollination increased seed quality both in terms of seed weight and seed germination. This finding shows that impact of pollination is almost similar to what has been already reported by others (Latif *et al*, 1960) about *Apis indica* pollination for other closely related crops like toria and sarson (two important cultivars of *Brassica campestris)*. The seeds produced by the plants, cross-pollinated by *Apis cerana* were consistently heavier than those produced by control plants.

To sum up the discussion, it is verified that bee pollination can make a positive impact on the seed production in the Indian mustard crop in Kathmandu valley. In the absence of any comparable data it is difficult to state that impact of pollination on this crop would remain the same or it will vary under different agroclimatic conditions. However one thing is certain that it does vary from reported findings (Rao et al,1984) from the plains.

ACKNOWLEDGEMENTS

We are thankful to Mr. D.S. Rana, Mr. I.R. Pandey, Mr. L.N. Devkota and Mr. P.K. Thapa of HMG/FAO Vegetable Seed Production Project, Khumaltar, for providing us with the necessary facilities. Financial support by USAID under Grant No. 367-5600-G-SS-1147-00, "Programme in Science and Technology Cooperation", and the ADB Grant for Sustainable Agriculture (RETA-5443) is thankfully acknowledged. The authors are also thankful to Mr. Prem Thapa, beekeeper, for his technical help.

REFERENCES

Deodikar G.B, Suryanarayana M.C. (1972) Crop yields and bee pollination. *Indian Bee J.* 34, 53-64.

----------, Suryanarayana M.C. (1973) Bees enhance crop yields. *Indian Fmg.* 23, 31-36.

----------, Suryanarayana M.C. (1977) Pollination in the Service of increasing farm production in India. *Advances in Pollen - Spore Research* 2, 1-23.

Dulta P.C., Verma L.R. (1987) Role of insect pollinators on yield and quality of apple fruit. *Indian J. Hortic. Res* .44, 274-279.

Free J.B. (1970) Insect Pollination of Crops. pp 148-149. Academic Press, London, UK.

Free J.B., Spencer-Booth Y. (1963) The pollination of mustard by honeybees. *J. Apic. Res.* 2, 69-70.

Latif, F., Qayyum, A., Abbas, M. (1960) The role of *Apis indica* in the pollnation of toria and sarson *(Brassica campestris var toria* and *dichotoma)*. *Bee Wld* 41, 283-286.

McGregor, S.E. (1976) Insect pollination of Cultivated Crop Plants. *USDA/ARS Agric Handbook* 496, 261-262.

Rao, M., Lazor, G.M., Suryanarayana, M.C., Thakur, C.V. (1984) Bees can boost oil seed production. *Indian Bee J* 46, 33-35.

Tewari, G.N., Singh, K. (1983) Role of insect pollinators in vegetable seed production. *Indian Bee J* 45, 51.

130

Verma, L.R. (1990) Beekeeping in Integrated Mountain Development: Economic and Scientific Perspectives. Oxford and IBH Publishing Co. New Delhi, India. pp 367.

----------, (1992) Honeybees in Mountain Agriculture. Oxford Publishing Co. New Delhi, India. pp 274.

----------, and Partap, U. (1993a). The Asian Hive Bee, *Apis cerana* as a pollinator in Vegetable Seed Production. An Awareness Handbook, pp. 53. An ICIMOD Publication.

----------, (1993b). Foraging behaviour of *Apis cerana* on cole vegetable crops and its impact on seed production. J. Apic. Res. (Accepted).

Table 1: Hourly Records of Temperature and Relative Humidity during the Blooming Period of Indian Mustard (Feb/Mar 1993) at Khumaltar in Kathmandu Valley, Nepal. Values an Means of Ten Observations ± SE.

Time (h)	Temperature (°C)	Relative Humidity (%)
700	9 ± 0	97.0 ± 1.3
800	10.8 ± 0.3	93.4 ± 1.2
900	13.6 ± 0.4	91.8 ± 1.0
1,000	18.4 ± 0.2	78.0 ± 1.7
1,100	23.2 ± 0.4	66.0 ± 0.7
1,200	25.8 ± 0.2	58.4 ± 2.1
1,300	27.4 ± 0.4	52.2 ± 0.9
1,400	25.6 ± 0.4	56.6 ± 1.7
1,500	22.8 ± 0.4	63.0 ± 2.2
1,600	21.2 ± 0.3	69.4 ± 2.5
1,700	18.0 ± 0.2	77.6 ± 1.8
1,800	15.4 ± 0.2	85.8 ± 1.8

Table 2. Floral Biology of Indian Mustard Kathmandu Valley, Nepal. Values are Arithmatic Means of Ten Observations ± S.E.

Parameter	Indian Mustard
No. of branches per plant	10.1±1.5
No. of flowers per branch	1300±17.9
Time of flower opening	Open in the morning and remains open for about 2-3 days
Time of flower closing	
Diameter of flower(mm)	10±0.3
Length of bud (mm)	6±0.3
Total flowering period	6 weeks (mid-February to late March)

Table 3: Quantitative and Qualitative Effects of *Apis cerana* Pollination on Indian Mustard Seeds Values are Arithmatic Means of Ten Observation ± S.E.

Parameter	Control	Open Pollinated	Bee Pollinated	% Increase[1]	% Increase[2]
Fruit set	81.6±2.9	82.5±3.5	87.7±2.3	6.1*	5.2
No.of Seeds per Siliqua	8.5±0.2	10.3±0.3	11.7±0.2	38.0**	14.2*
Estimated Seed yield per ha (kg)	260.5	263.4	354.3	36.0**	34.6**
100 Seed Weight (mg)	110.2±2.7	148.5±0.9	165.5±0.2	48.4**	17.0*
Percent germination	69.3±1.7	75.3±0.7	88.7±1.8	19.4**	34.6**

** significant at P=0.01;

* significant at P =0.05

[1] increase compared to control

[2] increase compared to open pollinated.

Progressive Hortic. (in press).

Insect Pollination of Egg Plant (*Solanum melongena* var Pusa Purple Long) in Kathmandu Valley of Nepal

Uma Partap and L. R. Verma

International Centre for Integrated Mountain Development
ICIMOD, P.O. Box 3226, Kathmandu, Nepal

Abstract

Floral biology and insect visitors of egg plant (*Solanum melongena* var Pusa Purple Long) and their foraging behaviour in relation to pollination was studied under mid-hill conditions at 1,500 m.a.s.l.(metres above sea level) in Kathmandu valley of Nepal. An egg plant bore an average number of 11.6 flowers each day (with few older flowers closing and new flowers opening each day). The flowers were of two types: smaller flowers had an average diameter of 32.2 mm while the larger flowers were 46.7 mm in diameter. The small flower had small style and in the large flowers the style projected beyond the anther tube. The flower opened the morning and remained open for two-three days. The total flowering period of the crop lasted for about six weeks.

Three types of insects viz bumble bee (*Bombus orientalis*), alkali bee (*Nomia* sp.) and honey bee (*Apis cerana*) visited egg plant bloom among which bumble bee and alkali bee were the most regular visitors and present throughout the flowering period of the crop whereas honeybee made 2-4 visits per day. Bees of *Nomia* spp. and *Bombus orientalis* spent on an average 3.6 and 7.3 seconds on flower and visited 8.2 and 6.2 flowers per minute respectively. Insect pollinated plants bore an average number of 12.2 fruit/plant each weighing 198.8 g. whereas control plants did not set any fruits.

135

INTRODUCTION

Egg plant is an important vegetable grown in Kathmandu valley of Nepal. In recent years, seeds of egg plant produced in Nepal is gaining importance in foreign markets. According to Vegetable Development Division, Kathmandu, Nepal, in 1980-90, some 20,000 kg of egg plant seeds have been exported. Egg plant fruits produced in Nepal are also exported to Tibet. The production of good quality fruits and seeds depends upon the adequate pollination of the crop.

Flower structure of egg plan' and cone like formation of anthers around style favours self-pollination but Kakizaki (1924) and Jones and Rosa (1928) reported that the plant is neither self pollinated nor wind pollinated but strictly insect pollinated. However the pollinating insects on egg plant are least studied. Pammel and King (1930) reported that bumble bees were most common on its flowers but no honeybees came to the flowers. Sambandam (1964) and Pal and Taller (1969) discussed the pollination of egg plant and reported that 60-70 percent of fruit set is attributed to insect pollination but did not mention the insect pollinators.

However Batra (1967) recorded 13 species of insect pollinators on egg plant during June to December in Ludhiana, India, including 2 species of *Xylocopa*, 1 species of *Ceratina*, 3 species of *Amegilla*, 2 species of *Apis*, 1 species of *Megachile*, 3 species of *Nomia*, and one species of *Lasio- glossum*. Tanda and Mann (1985) reported honeybees, butterflies, bumble bees and syrphid flies on egg plant flowers in Punjab, India. The insect pollination of egg plant under agroecological conditions of Kathmandu valley, Nepal has never been studied. In the present paper we made a detailed investigation on floral biology, insect visitors and their behaviour in relation to pollination of egg plant.

MATERIALS AND METHODS

Studies on floral biology and insect pollinators of egg plant were made in a $50m^2$ plot in Kathmandu valley, Nepal. The plots had about 40 plants raised under standard agronomic practices.

Observation on floral biology were made on the number of flowers per plant, time of opening and closing of flowers and the total flowering period of the crop.

Insects visiting the bloom were observed throughout the blooming period of the crop. Insects of each species were counted in marked squares (5m x 5m) during their peak foraging hours. Two specimens of each species were killed in ethylacetate and stored for identification. Identification was made in collaboration of Department of Entomology, Nepal Agriculture Research Centre, Kathmandu.

Observations on the foraging behavior of the insects were recorded for the time of initiation (the time when the first bee of each species was observed foraging on egg plant) and cessation (the time when last bee foraged on the plant) of foraging, time spent on the flower, number of flowers visited per minute and number of visits each species made every hour from 0500 to 1800 hours. These observation were made per m^2 area having 3-4 plants.

In order to know the effect of insect pollination on egg plant fruits, five plants were covered with muslin bags (control) to exclude the insect pollinators. Number and weight of fruits produced by control plants and insect pollinated plants were recorded. Data were analysed statically using standard errors about the means.

RESULTS AND DISCUSSIONS

Floral Biology of Egg Plant in Kathmandu Valley of Nepal

Floral biology of egg plant is given in Table 1. Each plant bore an average number of 11.6 flowers per day (some new flowers open and older flower close each day). The flowers open in the morning and remained open for two-to-three days. The plant produced two types of flowers i.e. (i) 2-3 flowers born in cymes opposite the leaf and (ii) one single flower born at the base of the cyme. The flowers born in the cymes were smaller in size (mean diameter 32.2 mm) than the single flowers born at the base of the cyme (mean diameter 46.7 mm). The

smaller flowers had small style which remained inside the anther tube and the in larger flowers the style was long projecting beyond the another tube (five anthers formed a cone like tube around the style. They dehisced at the terminal pores). We observed that only the single flowers born at the base of cymes produced fruits and those born on cymes were shed within one or two days after they open. Our observations agree with those of Smith (1931) who found that single flowers were less likely to shed than those on multiple cymes. Choudhury (1987) also reported that the flower types with long and medium style marked by a swollen ovary at the base bear fruits, whereas the other type having short style and rudimentary ovaries do not develop into fruits.

Insect Visitors of Egg Plant in Kathmandu Valley of Nepal

Three species of insect visitors namely *Nomia* spp., *Bombus orientalis* and *Apis cerana*, were observed on egg plant bloom (Table 2) among which *Nomia* spp. was most abundant (51.9%), followed by *Bombus orientalis* (36.3%). *Apis cerana* was least abundant comprising only 11.8 percent of the total insect visitors (Table 3). Earlier, Batra (1967), 1977) recorded 13 species of insects visiting egg plant in bloom including three species of *Nomia* and two species of *Apis* i.e. *A. dorsata* and *A. florea* at Ludhiana, India but she observed that the *Apis* pollinators were not as abundant as other bees. Pammel and King (1930) stated that bumble bees were most common on egg plant flower at Ames, Iowa, but no honeybees came to the flowers. However, Tanda and Mann (1985) reported that flowers of egg plant were visited by honeybees, butterflies, bumble bees and syrphid flies in Punjab, India.

Foraging Behaviour of *Nomia* spp., *Bombus orientalis* and *Apis cerana* on Egg Plant Bloom

Bumble bees (*Bombus orientalis*) started foraging earlier in the morning at 0513 hours and ceased foraging at 1810 hours in the evening (Table 4). Its peak foraging activity was observed between 0600-0900 hours (Table 4) when they made 12.8 to 20 visits (Table 5). Foraging activity decreased after 0900 hours and between 1100 to 1400 hours it did not visit

the bloom at all (Table 5) probably due to high temperatures. During its single visit a bumble bee visited 5.2 flowers per minute and spent 8.2 seconds on individual flower.

A bumble bee collected pollen from the egg plant flower by clinging underneath the flower and rapidly vibrating its body to release pollen from the anther tubes to the underside of its body. The pollen deposited on underside of its body is groomed by middle legs but some pollen remains to contact the stigma to affect pollination.

Bees of *Nomia* spp. started foraging at 0731 hours in the morning and ceased foraging at 1712 hours. Peak foraging activity was observed at 900-1200 hours (Table 4) during which 14.2 to 16.1 visits were made by the bees of this species (Table 5). A bee of *Nomia* species spent 3.6 seconds on flower and visited 8.2 flowers per minute during a single foraging trip. While working a flower it first made a distinct buzzing sound for 5-10 seconds probably to vibrate the anthers to release the pollen, some of which might fall onto the stigma to affect pollination.

Honeybees only made 2-4 visits every day sometimes in the morning (between 600-1100) and in the evening (between 1500-1600 hours) throughout the flowering period of the crop (Table 5). This is probably because of the peculiar structure of flower and the absence of nectar. While visiting the flower it spent 4.3 seconds on flower and visited 7.1 flowers per minute (Table 4). Bees of all the three species only collected pollen from egg plant flower. McGregor (1976) also reported that insects visit egg plant flower mostly for pollen.

On the basis of insect number, duration of foraging activity, number of visits made, time spent on the flower and number of flowers visited per minute *Bombus orientalis* and *Nomia* spp. were the most significant pollinators of egg plant flowers in Kathmandu valley of Nepal where as *Apis cerana* was not significant due to their low number, erratic appearance and less number of visits. Pammel and King (1930) and Batra (1967, 1977) also did not observe *Apis cerana* on egg plant flower, where as these workers observed bees of *Bombus orientalis* and *Nomia* spp. respectively as the most common visitors of egg plant flowers. The unusual pollination mechanism of egg plant that the tabular anthers must be shaken vigorously in order to release

pollen was carried out by the bees of both *Nomia* spp., and *Bombus orientalis* showing that bees of both the species are most significant pollinators of egg plant flower.

Effect of Insect Pollination on Fruit Set

Insect-pollinated plants produced 12.2 fruits/plant weighing 198.8 g/fruit whereas control plants did not set any fruit (Table 6), suggesting that the flowers needed cross pollination by insects. That egg plant flower is strictly insect pollinated has already reported (Kakizaki, 1924, Jones and Rosa, 1928; McGregor 1976). Sambandam (1964) stated that 30 to 40 percent of fruit set in egg plant is attributed to the pollination by contact, gravity and wind and the rest 60 to 70 percent to the insects. Pal and Taller (1971) also stated that within the variety the number of seeds per fruit is higher in cross pollinated than in self-pollinated plants but substantially lower than in open pollinated plants, however, these auhers did not mention insects responsible for better pollination.

Thus, the results of present investigation suggest that bees of *Bombus orientalis* and *Nomia* spp. are the potential pollinators of egg plant. If conserved and managed, these semidomesticated species could increase the yields, through cross pollination of various agricultural/horticultural crops. These species have been reported to be the more efficient pollinators of some crops than honeybees under certain conditions (Bohart, 1960; Batra, 1967).

Acknowledgements

This research was supported under grant No. 367-5600-55-1147-001, Programme in Science and Technology Cooperation, office of the Science Advisor, U.S. Agency for International Development.

REFERENCES

Batra, S. W. T., 1967. Crop Pollination and the flower relationship of wild bees of Ludhiana. *J. Kansas ent. Soc.*, 40: 164-177.

Batra, S. W. T., 1977. Bees of India (Apoidea), their behaviour, management and a key to the genera. *Oriental Insects* 11: 289-324.

Bohart, G. E. 1960. Insect pollination of forage legumes. *Bee World* 41: 57-64, 85-97.

Choudhury, B. 1987. Vegetables. National Book Trust, India. pp.195.

Free, J. B. 1970. Insect Pollination of Crops. Academic Press, London, U.K., pp.506.

Jones, H. A. and Rosa, J. T. 1928. Turck Crop Plants. McGraw Hill, New York.

Kakizaki, Y. 1924. The flowering habit and natural crossing in the egg plant. *Japan Jour. Genet.* 3: 29-38.

McGregor, S. E. 1976. Insect Pollination of Cultivated Crop Plants. USDA/ARS. Agric. Handbook. 496: 213-215.

Pal, G. and Taller, M. 1971. Effects of pollination methods on fertilization in egg plant (*Solanum melongena L.*) *Biol. Abs.* 52 (11) 58979: 5925.

Pammel, L. H. and King, C. M. 1930. Honey Plants of Iowa. *Iowa Geol. Survey Bull.* 7: 1192.

Sambandam, C. N. 1964. Natural cross pollination in egg plant (*Solanum melongena*) Econ. Bot. 18: 128-131.

Smith, O. 1931. Characteristics associated with abortion and intersexual flowers in the egg plant. *J. Agr. Res.* 43: 83-94.

Tanda, A. S. and Mann, G. S. 1985. Honeybees (*Apis mellifera*) as pollinators of egg plant in Punjab, India. *Proc. Int. Conf. Apic. Trop. Climates, Nairobi*, 1984: 138 (1985).

Table 1: Floral Biology of Egg Plant in Kathmandu Valley, Nepal

Number of Flowers per Plant per day*	11.6±0.4
Time of Flower Opening & Closing	Flowers open in the morning and remain open for 2-3 days
Diameter of bigger flower[1/] (mm)	46.7 ±0.8
Diameter of small flower[2/] (mm)	32.2 ±0.9
Total flowering period of crop	6 weeks (June to mid-July)

Older flowers close and new flowers open each day.

1/ Single flowers born at the base of cyme are bigger in size and less likely to shed.

2/ 2-3 flowers born in cyme are smaller in size and more likely to shed.

Table 2: Insect Visitors of Egg Plant Bloom in Kathmandu Valley, Nepal

S. No.	Insect Species	Family	Order
1.	*Nomia* spp.	Halictae	Hymenoptera
2.	*Bombus orientalis*	Apidae	Hymenoptera
3.	*Apis cerana*	Apidae	Hymenoptera

Table 3: **Number of Each Insect Species in 5m x 5m Squares During Peak Foraging Hours on Egg Plant Bloom Values are Mean of Ten Observations ±S.E.**

Insect Species	*Peak Foraging Hours*	Number	Percentage
Nomia spp.	900-12000	5.3 ±0.3	51.9
Bombus orientalis	0600-0900	3.7 ±0.2	36.3
Apis cerana	1000-1100	1.2 ±0.1	11.8

Table 4: Foraging Behaviour of Different Insects on Egg Plant Bloom Values are Mean of Ten Observations ±S.E.

Parameter	Insect Species		
	Nomia spp.	*Bombus orientalis*	*Apis cerana*
Initiation of Foraging (Time of Day)	0721 ±7	0513 ±3	No specific time. Made 2-4 visits every day between 0900 to 1100 hours
Cassation of Foraging (Time of Day)	1712 ±5	1810 ±5	
Peak Foraging Hours (Time of Day)	0900 - 1200	0600-0900	-
Time Spent on Flower (Sec)	3.6 ±1.1	7.3 ±0.6	4.3 ±0.3
Number of Flowers visited per min.	8.2 ±0.3	6.2 ±0.3	7.1 ±0.5

Table 5: Hourly Counts of Number of Insect Visits per m^2 Area on Egg Plant Bloom.

Values are Mean of Ten Observations ± S. E.

Insect Species	Hourly Count of Average Number of Insect Visits												
	5-6	6-7	7-8	8-9	9-10	10-11	11-12	12-13	13-14	14-15	15-16	16-17	17-18
Nomia spp.	0	0	0.8±0.2	3.3±0.2	15.6±0.3	14.2±0.2	16.1±0.2	6.1±0.4	5.5±0.3	2.8±0.4	3.0±0.3	1.8±0.6	0
Bombus orientalis	1.4±0.1	12.8±0.3	18.8±0.2	20.0±0.3	3.6±0.2	0.9±0.3	0	0	0	0.9±0.1	3.0±0.2	3.2±0.2	1.4±0.2
Apis cerana	0	0.3±0.1	0	0	2.3±0.1	1.9±0.3	0	0	0	0	0.8±0.2	0	0

Table 6: Effect of Insect Pollination on Fruit Set in Egg Plant.

Values are Mean of Ten Observations ± S.E.

Treatment	Total No. of Fruits/Plant	Weight/Fruit (g)
Control	0	0
Insect Pollinated	12.2±0.5	198.8± 13.3

148

Proc. UNESCO Workshop on Conservation and Management
of Biol. Resour. in Himalayas,Srinagar, Garhwal, India, 1993.

MS # 17

Pollination Strategies for Conservation of Biodiversity in Hindu Kush-Himalayan Region

L.R. Verma

International Centre for Integrated Mountain Development
P.O. Box 3226, Kathmandu, Nepal

The widely influential United Nations Conference on Environment and Development (UNCED) held in Rio points out that despite outward success of green revolution, crop yields are stagnating or declining in many countries, rural poverty is increasing and the natural resource base is being seriously degraded. This conference concluded: "*Major adjustments are needed in agricultural, environmental and macro-economy policy at both national and international level to create the conditions for sustainable agriculture and rural development*". According to Food and Agriculture Organization (FAO) "*Sustainable development is the management and conservation of the natural resource base, and the orientation of technological and institutional change in such a manner as to ensure the attainment and continued satisfaction of human needs for present and future generations. Such sustainable development (in agriculture, forestry and fisheries sectors) conserves land, water, plant and animal genetic resources, is environmentally non-degrading, technically appropriate, economically viable and socially acceptable*

In the context of above, conservation and management of native bees and the maintenance of a thriving beekeeping industry are both essential for sustainable agriculture and rural development. Swaminathan (1986) in his forwarding note in FAO Service Bulletin on Apiculture Stated "*Inspite of all global resolutions on food security, several hundred million children, women and men are going to bed hungry everyday, particularly in the countries of the 'South'. Since prospects for global food security system appear to be small at the present moment, it will be for the developing countries, characterized by poverty and under-nutrition, to build their own national food security system. In this task, apiculture can play a useful role. At every little expenditure, honeybees will not only provide food and income; but will also enhance the productivity of horticultural and other field crops by their pollination activities*".

Honeybees and other native bees play an indispensable role both in agricultural and natural ecosystems because pollination by bees is vital for seed production not only for the majority of our crops plants but also for an unknown number of wild flowers. In the context of the sustainable development of mountain agriculture throughout Hindu Kush-Himalayan range in

BEST AVAILABLE DOCUMENT

terms of resource base availability, resource management practices, and production flow, International Centre for Integrated Mountain Development (ICIMOD) has identified beekeeping and pollination ecology as such income, nutrition and food generating activity which offers comparative advantages for mountain areas and is environmentally most friendly. The pollination activities of honeybees boost the productivity of several mountain crops and help in the conservation of forest and grass land ecosystems (Verma, 1990, 1992 and Verma and Partap, 1993).

Economic Value of Bees and Beekeeping as Pollinator of Agricultural Crops:

The vital role which honeybees play in the pollination of large number of cultivated crops is often under estimated especially in developing countries. As a matter of fact, the main significance of honeybees and beekeeping is pollination, whereas, hive products, like honey and beeswax are of secondary value. This is evident by the fact that income from agriculture by the use of honeybees in crop pollination is many times greater than their value as honey and beeswax production.

In 1976, S.E. Mc Gregor, an eminent pollination scientist in United States estimated that "*One third of man's diet is derived directly or indirectly from insect pollinated plants*". This includes the animal products from herbivores feeding on insect-pollinated legumes such as clovers and lucerne, and vegetable oils from oil seed crops. Several other economic estimates of the value of honeybee pollination to agriculture in different countries or areas of the world have also been worked out. For example, the value of bee pollination in crop production in USA has been estimated more than 20 billion US dollars per annum (USDA-ARS, 1992), in Canada 1200 million Canadian dollar (Winston and Scott, 1984) and in European Community (EC) about 3000 million dollars (Williams, 1992). A recent FAO report indicates that in 20 developed and developing countries of mediterranean region, these estimates are about 5200 million US. dollars per year. Taking into account only the increase in seed yield of four major crops viz. rape, cotton, tea and sunflower in China, the economic returns from honeybee pollination would be more than 6 billion yuan or six to seven times the direct income from bee products (Chen Yao Chun, 1993). No attempts have been made to assess the value of pollination by honeybees in other developing countries of the world, but it is undoubtably considerable.

Diversity and Economic Value of Non-*Apis* Pollinators:

Besides honeybees, in recent years much attention in developed countries is also being given to commercial exploitation of other insect pollinators especially bumble bees and solitary bee species. The wild bees are well known and valued as important pollinators of crops and other

BEST AVAILABLE DOCUMENT

plants. In fact, in several countries some species are commercially raised and used for pollination of lucerne and other crops that are not pollinated as effectively by honeybees. For example, at present near 10-15 companies are producing bumble bee colonies, most of them being located in western Europe, Israel, New Zealand, USA and Canada. In 1992, they sold an estimated number of 300,000 colonies, representing a value between 30 and 60 million US dollars (Doorn, 1943).

The Himalayan region is blessed with a great variety of climates, which permit a wide range of flora and fauna including diverse wild species of non-apis bees belonging to the families Apidae, Anthophoridae, Megachilidae, Melittidae, Andrenidae, Halictidae and Colletidae. Throughout the world, more than 20,000 bee species have been estimated and these have been classified into 200 genera, 9 families and 49 subfamilies (Michner 1974). In the Indian subcontinent, Batra (1977) reported about 50 genera of bees belonging to 7 families. A survey conducted by Verma and Chauhan (1985) reveals that 44 insect species belonging to 15 families and 5 orders visit apple bloom in north-west Himalayas, and through pollination activity alone, yield goes up by 30 to 40 percent beside remarkable improvement in fruit quality (Table 3).

Bee Pollination Essential for Diversification of Mountain Agriculture:

Throughout the developing countries of Asia, after green revolution where major thrust has been upon cereal production, farmers are currently being encouraged to find other uses of their limited land including alternative crops, high value cash crops 'set aside', 'extensification' and 'forestry schemes'. This specially holds true for mountain areas where green revolution hardly made any impact because new miracle varieties of wheat and rice were not suitable and the technologies that went with them were inappropriate for mountain areas. The current trend of diversification from traditional cereal crops to alternative high value cash crops such as fruits, off-season vegetables, fodder and oil seed crops will need insect pollination. Hence need for bees and other insect pollinators to pollinate crops is expected to increase and not decrease in future.

The diversity of cultivated mountain crop plants that are dependent on or benefitted by honeybee pollination are listed here:

- Fruits and nuts
- Vegetables and pulses
- Cereals
- Drugs, beverage, condiments and spice plants
- Oil crops
- Forage crops
- Timber trees and natural vegetation

BEST AVAILABLE DOCUMENT

Many of the mountain crops we grow in Himalayan region benefit through pollination by bees in several ways. More fruit or seed is perhaps the most common benefit, as in clovers, fruit quality can be improved, as in apple or seed ripening can be synchronized as in oil seeds rape, oil content of seed can be improved, as in sunflowers and hybrid vigour with better germination and seedling establishment can be incorporated. In ICIMOD, we have reviewed the pollination requirements of major mountain crops and these findings are reviewed in Table 1.

Floral Diversity Essential for Maintenance of Sustainable Apiculture:

The pollination of crops and wild flowers by bees and conservation of "natural" environment are interdependent. Crops and wild flowers need bees to pollinate them, bees need succession of forage from crops and wild flowers to sustain them and the natural environment to supply them with nesting sites. The seed produced ensures the potential for survival of its plant species, if it results from cross-pollination, the potential for survival of the plant species is further enhanced because the genetic interchange involve all adaptation to new and changing environments. Further more, the fact that seeds and plants form parts of the food chain for seed eating and herbivorous insects, birds and mammals.

Directory of important world honey resources reveals 467 plant species as a major source of pollen and nectar out of preliminary list of 2569 plant species (Crane and Walker, 1984). In the Himalayan region, our research group has identified 231 plant species belong to 74 families as a major source and other 273 plant species of 102 families as medium and minor sources of nectar and pollen. Table 2 summarizes the list of major honey plant resources in Himalayas. In ICIMOD, currently computer assisted pollen data bank/library through analysis of bee collected pollen load and honey are being built.

Bees and Beekeeping for Monitoring Biodiversity and Environmental Pollution:

Besides pollination of several cultivated crops, bees and beekeeping also help in the conservation of natural forest and grass land ecosystems. Since honeybees are the natural and, thereby, most efficient pollinators of native plants, thus essential to the maintenance of plant biodiversity.

In addition, building of a computer data bank/library based on analysis of bee collected pollen load and honey sac contents, over a period of time can prove an important tool for monitoring the biodiversity of botanical resources on a regional level. Honeybees collect pollen from almost all flowering plants in the area. The analysis of honeybee pollen is an efficient

BEST AVAILABLE DOCUMENT

152

procedure to detect shift in plant biodiversity in the ecologically fragile Himalayan region to save minor plants that have suffered a decrease in occurrence.

Several pollutants, such as toxic metals not only directly kill the bees but also contaminate the bee forage and consequently, hive products such as honey and pollen also become contaminated (Crane, 1990). Since 1980, the possibility is being explored in developed countries that the bees themselves, or the material that they collect or produce, can be used as indicators of environmental pollution with a great degree of success. Since the problems of environmental pollution is manifold in the developing countries of this region, use of honeybee as a bio-indicator/biosensor or pollution survey tool might prove to be a very efficient and cheap technique. Native honeybees provide following advantages for monitoring biodiversity and environmental pollution.

- Distributed over a broad geographic area
- Capable of providing continuous assessment
- Easy and cost effective to measure
- Easy to collect, assay and/or analyses
- Sensitive to provide early warning of change
- Relevant to ecologically significant phenomenon
- Rich in genetic diversity
- Sympatric in distribution

Strategies for Conservation of Pollinator Diversity in Himalayas:

Recent survey conducted by author indicates that many of the natural pollinators especially the domesticated Himalayan hive bee, *Apis cerana* populations are showing precipitous decline throughout the Himalayan range. The major threat comes from introduction of exotic European honeybee species, *Apis mellifera* because of its allopatric distribution. In recent years, an epidemic Thai Sacbrood Virus disease is killing large number of native hive bee *Apis cerana* and its population throughout its native habitat is reduced to a level which is no longer viable. Researches conducted on this epidemic by our research group reveal that this disease mainly occurs because of the environmental stress caused by the habitat alternation due to agricultural transformation and deforestation, pesticide poisoning and human predations especially through honey hunting methods. Human mismanagement, misguided economic policies and faulty institutions have impoverished the environment for non-apis pollinators also.

In order to reverse the above trend, there is a need to follow the initiatives taken in Europe, where the Committee of Agricultural Organization (COPA) in 1989 together with the General Committee for Agricultural Co-operation in the EC (COGECA) in 1990 commissioned two reports to analyze the problems, need and support required by beekeeping industry in the EC.

BEST AVAILABLE COPY

Scientific and Technical Options Assessment Branch of European Parliament has also set up a review committee (*Corbet et.al.*, 1991) on "*Bees and the pollination of crops and wild flowers: changes in the European community*". The central role played by honeybees in crop pollination has also been highlighted in recent assessment of the economic value of honeybee pollination to agriculture in USA, Canada, Europe and Newzealand (Williams, 1991). On the recommendation of these reports, additional support is now becoming available for honeybee research, the search for, and development of, management systems for alternative native bee pollinators and habitat management research within agro-ecosystems.

There is now considerable importance being attached to pollination in south and south-east Asian region. Suzzane W.T. Batra (1993), an expert on solitary bees in U.S.D.A while stressing the need for further research on native bees of south Asia have identified (i) biogeography and biology of bees and their hosts at various climates in the Himalayas, (ii) orchid-pollinator relationship, (iii) management of solitary bees for crop pollination, (iv) surveys and conservation of bee populations in agricultural, over grazed deforested and urbanizing habitats (v) Surveys of bee species in remaining undisturbed natural habitats of selected species and (vi) detailed studies on pollination biology of native wild plants as scientifically rewarding topics in Himalayan region for further research.

A wide diversity of native bees in Himalayas are an important natural resource base, it is, therefore, important that as much as possible be learned because wild habitats that support rare bee species and that host plants are more rapidly and widely disappearing in Himalayas than elsewhere, yet relatively much less is known here.

In the future, sustainable agriculture and maintenance of bio-diversity will depend more on pollination by bees and native insect pollinators must not be squandered if present and future generations are to continue to enjoy the variety and abundance of food currently available and the natural environment with its associated fauna and flora.

ACKNOWLEDGEMENTS

The study was financed by the USAID under Grant no. 367-5600-G-SS-1147-00, Programme in Science and Technology Cooperation and Austrian Government Grant through Austrovieh Biomerx for Beekeeping project in ICIMOD.

References

Batra, S.W.T., 1993. Bees and Pollination in South Asia. Proc. Int. Symp. Polln. Trop. India (Eds) G.K. Veeresh, R.Uma Shankar and G.N.Ganeshaiah. Published by IUSSI-Indian chapter. Banglore. pp 171-173.

Batra, S.W.T., 1977. Bees of India (Apoidea), their behaviour, management and a key to the genera. Oriental Insects 11(3): 289-324.

Chen Yao Chun, 1993. Apiculture in China. Agricultural Publishing House, People's Republic of China. pp 44-47.

COPA/COGECA 1989. Beekeeping in the European Community: problems and needs. Pr(89)26, Pr(89)28. Brussels, Belgium.

COPA/COGECA 1990. Proposals for specific measures to support the production of honey, the honey market and beekeeper's income in the community Pr(90)18, Pr(90)19. Brussels, Belgium.

Corbet, S.A., Williams, I.M. and Osbourne, J.L. 1990. Bees and the pollination of crops and wild flowers. Changes in the European Community and Technical Options Assessment. European Parliament pp 1-50.

Crane Eva, 1990. Bees and Beekeeping: Science, Practice and World Resources. London, Heinemann Newnes.

Crane, E and Walker, P. 1984. Pollination Directory for World Crops. London: International Bee Research Association.

Doorn, V.A., 1993. Bumblebees breaking through as crop pollinators. Proc. Int. Symp. Polln. Trop., Banglore. India pp 195-196.

McGregor, S.E., 1976. Insect pollination of cultivated crop plants. Washington, D.C: USDA/ARS Agric. Handbook.

Michner, C.D., 74. The social behaviour of bees and comparative study. Harvard University Press, Cambrid e Mass.

Swaminathan, M.S., 1986. Tropical and sub-tropical apiculture. FAO, Agricultural Services Bulletin No 68.

USDA-ARS, 1992. Pollination research workshop report, Denver: Colorado, USA.

155

Verma, L.R., 1990. Beekeeping in Integrated Mountain Development: Economic and Scientific Perspectives. Oxford and IBH Publishing Co. New Delhi.

Verma, L.R., 1992. Honeybees in Mountain Agriculture. Oxford and IBH publishing Co. New Delhi.

Verma, L.R. and Chauhan, P., 1985. Distribution, abundance and diversity of insect pollinators in apple orchards of Shimla hills. Indian J. Ecol. 12: 286-298.

Verma, L.R. and Partap Uma, 1993. The Asian Hive Bee, *Apis cerana* as a pollinator in vegetable seed production. ICIMOD publication.

Williams, I.H., 1991. Crop pollination and sustainable agriculture. Bee World 72: 45-46.

Williams, I.H., 1992. Apiculture for agriculture. British Beekeeper's Association, Spring Convention, Stone leigh, 14-18.

Winston, M.L and Scott, C.D., 1984. The value of bee pollination to Canadian apiculture. Canadian Beekeeping 11:134.

Proc. Regional Conf. Environment and Biodiversity,
Kathmandu, Nepal, 1994.

MS # 18

Honeybee Pollination Strategies for Sustainable Agriculture and Conservation of Biodiversity in Hindu Kush-Himalayan Region

L.R. Verma

International Centre for Integrated Mountain Development
P.O. Box 3226, Kathmandu, Nepal

The widely influential United Nations Conference on Environment and Development (UNCED) held in Rio points out that despite outward success of green revolution, crop yields are stagnating or declining in many countries, rural poverty is increasing and the natural resource base is being seriously degraded. This conference concluded: *"Major adjustments are needed in agricultural, environmental and macro-economy policy at both national and international level to create the conditions for sustainable agriculture and rural development"*. According to Food and Agriculture Organization (FAO) *"Sustainable development is the management and conservation of the natural resource base, and the orientation of technological and institutional change in such a manner as to ensure the attainment and continued satisfaction of human needs for present and future generations. Such sustainable development (in agriculture, forestry and fisheries sectors) conserves land, water, plant and animal genetic resources, is environmentally non-degrading, technically appropriate, economically viable and socially acceptable"*.

In the context of above, conservation and management of native honeybees and the maintenance of a thriving beekeeping industry are both essential for sustainable agriculture and rural development. Swaminathan (1986) in his forwarding note in FAO Service Bulletin on Apiculture Stated *"Inspite of all global resolutions on food security, several hundred million children, women and men are going to bed hungry everyday, particularly in the countries of the 'South'. Since prospects for global food security system appear to be small at the present moment, it will be for the developing countries, characterized by poverty and under-nutrition, to build their own national food security system. In this task, apiculture can play a useful role. At every little expenditure, honeybees will not only provide food and income; but will also enhance the productivity of horticultural and other field crops by their pollination activities"*.

Honeybees play an indispensable role both in agricultural and natural ecosystems because pollination by bees is vital for seed production not only for the majority of our crops plants but also for an unknown number of wild flowers. In the context of the sustainable development of mountain agriculture throughout Hindu Kush-Himalayan range in terms of resource base availability, resource management practices, and production flow, International Centre for Integrated Mountain Development (ICIMOD) has identified beekeeping and pollination ecology as such income, nutrition and food generating activity which offers comparative advantages for mountain areas and is environmentally most friendly. The

157

pollination activities of honeybees boost the productivity of several mountain crops and help in the conservation of forest and grass land ecosystems (Verma, 1990, 1992 and Verma and Partap, 1993).

Economic Value of Bees and Beekeeping as Pollinator of Agricultural Crops:

The vital role which honeybees play in the pollination of large number of cultivated crops is often under estimated especially in developing countries. As a matter of fact, the main significance of honeybees and beekeeping is pollination, whereas, hive products, like honey and beeswax are of secondary value. This is evident by the fact that income from agriculture by the use of honeybees in crop pollination is many times greater than their value as honey and beeswax production.

In 1976, S.E. Mc Gregor, an eminent pollination scientist in United States estimated that "*One third of man's diet is derived directly or indirectly from insect pollinated plants*". This includes the animal products from herbivores feeding on insect-pollinated legumes such as clovers and lucerne, and vegetable oils from oil seed crops. Several other economic estimates of the value of honeybee pollination to agriculture in different countries or areas of the world have also been worked out. For example, the value of bee pollination in crop production in USA has been estimated more than 20 billion US dollars per annum (USDA-ARS, 1992), in Canada 1200 million Canadian dollar (Winston and Scott, 1984) and in European Community (EC) about 3000 million dollars (Williams, 1992). A recent FAO report indicates that in 20 developed and developing countries of mediterranean region, these estimates are about 5200 million US. dollars per year. Taking into account only the increase in seed yield of four major crops viz. rape, cotton, tea and sunflower in China, the economic returns from honeybee pollination would be more than 6 billion yuan or six to seven times the direct income from bee products (Chen Yao Chun, 1993). No attempts have been made to assess the value of pollination by honeybees in other developing countries of the world, but it is undoubtably considerable.

Bee Pollination Essential for Diversification of Mountain Agriculture:

Throughout the developing countries of Asia, after green revolution where major thrust has been upon cereal production, farmers are currently being encouraged to find other uses of their limited land including alternative crops, high value cash crops 'set aside', 'extensification' and 'forestry schemes'. This specially holds true for mountain areas where green revolution hardly made any impact because new miracle varieties of wheat and rice were not suitable and the technologies that went with them were inappropriate for mountain areas. The current trend of diversification from traditional cereal crops to alternative high value cash crops such as fruits, off-season vegetables, fodder and oil seed crops will need insect pollination. Hence need for bees and other insect pollinators to pollinate crops is expected to increase and not decrease in future.

The diversity of cultivated mountain crop plants that are dependent on or benefitted by honeybee pollination are listed here:

- Fruits and nuts
- Vegetables and pulses
- Cereals
- Drugs, beverage, condiments and spice plants
- Oil crops
- Forage crops
- Timber trees and natural vegetation

Many of the mountain crops we grow in Himalayan region benefit through pollination by bees in several ways. More fruit or seed is perhaps the most common benefit, as in clovers, fruit quality can be improved, as in apple or seed ripening can be synchronized as in oil seeds rape, oil content of seed can be improved, as in sunflowers and hybrid vigour with better germination and seedling establishment can be incorporated. In ICIMOD, we have reviewed the pollination requirements of major mountain crops and these findings are reviewed in Table 1.

Floral Diversity Essential for Maintenance of Sustainable Apiculture:

The pollination of crops and wild flowers by bees and conservation of "natural" environment are interdependent. Crops and wild flowers need bees to pollinate them, bees need succession of forage from crops and wild flowers to sustain them and the natural environment to supply them with nesting sites. The seed produced ensures the potential for survival of its plant species, if it results from cross-pollination, the potential for survival of the plant species is further enhanced because the genetic interchange involve all adaptation to new and changing environments. Further more, the fact that seeds and plants form parts of the food chain for seed eating and herbivorous insects, birds and mammals.

Directory of important world honey resources reveals 467 plant species as a major source of pollen and nectar out of preliminary list of 2569 plant species (Crane and Walker, 1984). In the Himalayan region, our research group has identified 231 plant species belong to 74 families as a major source and other 273 plant species of 102 families as medium and minor sources of nectar and pollen. Table 2 summarizes the list of major honey plant resources in Himalayas. In ICIMOD, currently computer assisted pollen data bank/library through analysis of bee collected pollen load and honey are being built.

Bees and Beekeeping for Monitoring Biodiversity and Environmental Pollution:

Besides pollination of several cultivated crops, bees and beekeeping also help in the conservation of natural forest and grass land ecosystems. Since honeybees are the natural and, thereby, most efficient pollinators of native plants, thus essential to the maintenance of plant biodiversity.

159

In addition, building of a computer data bank/library based on analysis of bee collected pollen load and honey sac contents, over a period of time can prove an important tool for monitoring the biodiversity of botanical resources on a regional level. Honeybees collect pollen from almost all flowering plants in the area. The analysis of honeybee pollen is an efficient procedure to detect shift in plant biodiversity in the ecologically fragile Himalayan region to save minor plants that have suffered a decrease in occurrence.

Several pollutants, such as toxic metals not only directly kill the bees but also contaminate the bee forage and consequently, hive products such as honey and pollen also become contaminated (Crane, 1990). Since 1980, the possibility is being explored in developed countries that the bees themselves, or the material that they collect or produce, can be used as indicators of environmental pollution with a great degree of success. Since the problems of environmental pollution is manifold in the developing countries of this region, use of honeybee as a bio-indicator/biosensor or pollution survey tool might prove to be a very efficient and cheap technique. Native honeybees provide following advantages for monitoring biodiversity and environmental pollution.

- Distributed over a broad geographic area
- Capable of providing continuous assessment
- Easy and cost effective to measure
- Easy to collect, assay and/or analyses
- Sensitive to provide early warning of change
- Relevant to ecologically significant phenomenon
- Rich in genetic diversity
- Sympatric in distribution

Strategies for Conservation of Honeybee Diversity in Himalayas:

Recent survey conducted by author indicates that many of the natural pollinators especially the domesticated Himalayan hive bee, *Apis cerana* populations are showing precipitous decline throughout the Himalayan range. The major threat comes from introduction of exotic European honeybee species, *Apis mellifera* because of its allopatric distribution. In recent years, an epidemic Thai Sacbrood Virus disease is killing large number of native hive bee *Apis cerana* and its population throughout its native habitat is reduced to a level which is no longer viable. Researches conducted on this epidemic by our research group reveal that this disease mainly occurs because of the environmental stress caused by the habitat alternation due to agricultural transformation and deforestation, pesticide poisoning and human predations especially through honey hunting methods. Human mismanagement, misguided economic policies and faulty institutions have impoverished the environment for bees and beekeeping.

In order to reverse the above trend, there is a need to follow the initiatives taken in Europe, where the Committee of Agricultural Organization (COPA) in 1989 together with the General Committee for Agricultural Co-operation in the EC (COGECA) in 1990 commissioned two reports to analyze the problems, need and support required by beekeeping industry in the EC.

Scientific and Technical Options Assessment Branch of European Parliament has also set up a review committee (*Corbet et.al.*, 1991) on *"Bees and the pollination of crops and wild flowers: changes in the European community"*. The central role played by honeybees in crop pollination has also been highlighted in recent assessment of the economic value of honeybee pollination to agriculture in USA, Canada, Europe and Newzealand (Williams, 1991). On the recommendation of these reports, additional support is now becoming available for honeybee research, the search for, and development of, management systems for beekeeping and habitat management research within agro-ecosystems.

A wide diversity of native bees in Himalayas are an important natural resource base, it is, therefore, important that as much as possible be learned because wild habitats that support rare bee species and that host plants are more rapidly and widely disappearing in Himalayas than elsewhere, yet relatively much less is known here.

In the future, sustainable agriculture and maintenance of bio-diversity will depend more on pollination by honeybees and native bee species must not be squandered if present and future generations are to continue to enjoy the variety and abundance of food currently available and the natural environment with its associated fauna and flora.

ACKNOWLEDGEMENTS

The study was financed by the USAID under Grant no. 367-5600-G-SS-1147-00, Programme in Science and Technology Cooperation and Austrian Government Grant through Austrovieh Biomerx for Beekeeping project in ICIMOD.

References

Batra, S.W.T., 1993. Bees and Pollination in South Asia. Proc. Int. Symp. Polln. Trop. India (Eds) G.K. Veeresh, R.Uma Shankar and G.N.Ganeshaiah, Published by IUSSI-Indian chapter, Banglore. pp 171-173.

Batra, S.W.T., 1977. Bees of India (Apoidea), their behaviour, management and a key to the genera. Oriental Insects 11(3): 289-324.

Chen Yao Chun, 1993. Apiculture in China. Agricultural Publishing House, People's Republic of China. pp 44-47.

COPA/COGECA 1989. Beekeeping in the European Community: problems and needs. Pr(89)26, Pr(89)28. Brussels, Belgium.

COPA/COGECA 1990. Proposals for specific measures to support the production of honey, the honey market and beekeeper's income in the community Pr(90)18, Pr(90)19. Brussels, Belgium.

Corbet, S.A., Williams, I.M. and Osbourne, J.L, 1990. Bees and the pollination of crops and wild flowers. Changes in the European Community and Technical Options Assessment, European Parliament pp 1-50.

Crane Eva, 1990. Bees and Beekeeping: Science, Practice and World Resources. London, Heinemann Newnes.

Crane, E and Walker, P. 1984. Pollination Directory for World Crops. London: International Bee Research Association.

Doorn, V.A., 1993. Bumblebees breaking through as crop pollinators. Proc. Int. Symp. Polln. Trop., Banglore. India pp 195-196.

McGregor, S.E., 1976. Insect pollination of cultivated crop plants. Washington, D.C: USDA/ARS Agric. Handbook.

Michner, C.D., 1974. The social behaviour of bees and comparative study. Harvard University Press, Cambridge Mass.

Swaminathan, M.S., 1986. Tropical and sub-tropical apiculture. FAO, Agricultural Services Bulletin No 68.

USDA-ARS, 1992. Pollination research workshop report, Denver: Colorado, USA.

162

Verma, L.R., 1990. Beekeeping in Integrated Mountain Development: Economic and Scientific Perspectives. Oxford and IBH Publishing Co. New Delhi.

Verma, L.R., 1992. Honeybees in Mountain Agriculture. Oxford and IBH publishing Co. New Delhi.

Verma, L.R. and Chauhan, P., 1985. Distribution, abundance and diversity of insect pollinators in apple orchards of Shimla hills. Indian J. Ecol. 12: 286-298.

Verma, L.R. and Partap Uma, 1993. The Asian Hive Bee, *Apis cerana* as a pollinator in vegetable seed production. ICIMOD publication.

Williams, I.H., 1991. Crop pollination and sustainable agriculture. Bee World 72: 45-46.

Williams, I.H., 1992. Apiculture for agriculture. British Beekeeper's Association, Spring Convention, Stone leigh, 14-18.

Winston, M.L and Scott, C.D., 1984. The value of bee pollination to Canadian apiculture. Canadian Beekeeping 11:134.

Regenerative Agriculture Technologies for the Hill Farmers of Nepal: An Information Kit; NERRA (Nepal) and IIRR (Philippines), 1992.

POLLINATION TECHNOLOGY FOR VEGETABLE SEED PRODUCTION

Pollination is the transfer of pollen grains from the male part of the flower known as the anther to the female part called stigma. A plant is known to be self-pollinated when the pollination of its flower is by its own pollen and it is cross-pollinated when it needs pollen from another plant of the same species to effect fertilization. Fertilization is the result of the union of the male nucleus of the pollen grain with the female nucleus of the egg of the ovule. The ovule after fertilization develops into the seed.

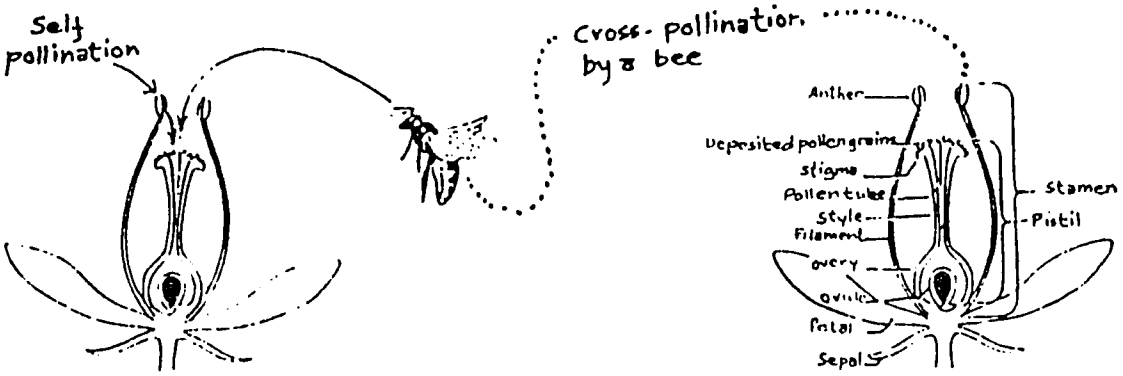

Source: Crane (1980a)

Many vegetable crops do not produce seeds or fruits without cross-pollination of their flowers. Cross-pollination of such crops by honeybees is the most effective and cheapest method of increasing their yield. Cross-pollination by honeybees stimulates germination of pollen grains, increases viability of seeds and embryos, enhances resistance to diseases, ensures uniform seed set and increases number and size of seeds.

It is not only the cross-pollinated varieties which are benefitted by honeybees; the self-pollinated varieties also produce more and better quality seeds when cross-pollinated. The flowers of these crops, in turn, provide the bees with nectar and pollen which they use for brood rearing, making honey and other hive products.

Vegetable crops which are benefitted by bee pollination

Asparagus	Cucurbits such as pumpkins, squash, musk melon, water melon, cucumber, bottle gourd, ridged gourd, bitter gourd etc.	Onion
Broad bean		Pepper green
Carrot		Radish
Cole crops such as cauliflower, cabbage, broccoli, etc.		Tomato
		Turnip
Chilies	Lettuce	
	Mustard	

Managing honeybee colonies for pollination

- Larger and stronger colonies with at least 7-8 frames covered with bees in the hive should be used.

- In general 4-5 colonies of local hive bee, *Apis cerana*/hectare of crop are recommended for efficient and sufficient pollination.

BEST AVAILABLE COPY

• For effective pollination, bee hives should be placed singly instead of in groups in the field.

• Bee colonies should be placed in the field when 5-10 percent of the crop is in bloom.

ISOLATION DISTANCE IN RELATION TO PURE VEGETABLE SEED PRODUCTION

Cross-pollination by honeybees helps in increasing the yield and quality of vegetable seeds. This activity of honeybees also hampers pure seed production in such crops due to intercrossing. By providing the necessary isolation distance between different cultivars of the same crop, crossing and contamination is avoided. Such isolation distance varies from 193-214 m for different vegetable crops.

REDUCING PESTICIDE POISONING TO BEES (Fig. 2 and 3)

Beekeeping and pesticides are both essential inputs for modern vegetable seed production technology. By ignoring either of these two, vegetable seed production is seriously impaired. However, a conflict often arises when pesticides are applied to a crop at an inappropriate time or by inappropriate means.

Following strategies are recommended for protecting bees against pesticide poisoning:

- Pesticide applications should not be applied during the blooming period.
- Pesticides with short residual effects should be selected.
- Educate vegetable growers and beekeepers properly about pesticide application schedules.
- Recommend selective pesticides over broad-spectrum ones.
- Apply pesticides either during night or early morning hours when bees are not flying.
- Spray or liquid formulations are safer to bees than dust or wettable powder formulations.
- Keep colonies one kilometre away from the site of spray. This reduces bee mortality ninefold.
- Encourage an integrated pest management programme.

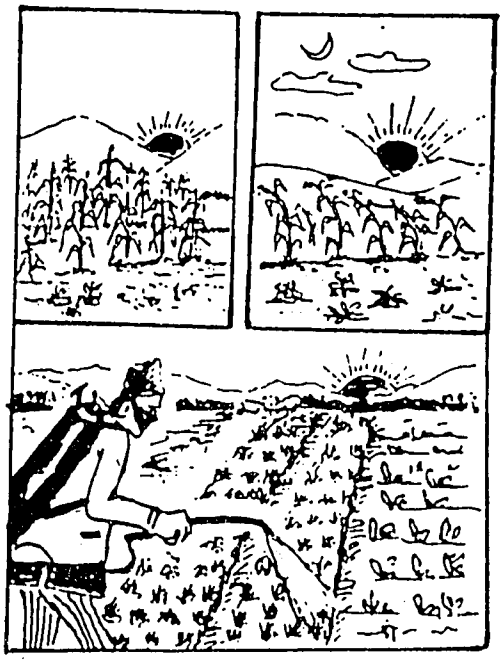

Prepared by: Prof. L.R. VERMA AND UMA PARTAP
Third Draft

Presentation Date: April 21, 1992
Date: April 21, 1992

BEST AVAILABLE COPY

Acknowledgements

This research was supported under grant No. 367-5600-55-1147-001, Programme in Science and Technology Cooperation, office of the Science Advisor, U.S. Agency for International Development.

1166

Proc. Nat. Sem. on Forest Produce, Coimbatore, India, 1993. **MS # 20**

Honey and Honeybees in Forest Ecosystem

L. R. Verma

International Centre for Integrated Mountain Development
P. O. Box 3226, Kathmandu, Nepal

Honey as a natural sweet forest product of the bee nest has been treasured by man from ancient times in India due to its high nutritional and medicinal value. The most important raw material for honey is nectar and other natural plant exudations. In India, about 50 percent or more of honey is harvested from wild colonies of Apis cerana F., Apis dorsata F. and Apis florea F. found in forests. Keeping in view, the total area of the country as well as the potential for beekeeping development in India, it has been estimated that there is enough bee forage in terms of wild plants and cultivated crops to support 5 million bee colonies. This would mean substantial and reliable income to tribal and rural population in India. About 80 percent honey in India is used as table honey and the remaining in bakery, confectionery, cereal foods, baby foods, tobacco, pharmaceutical and cosmetic industries. Besides honey,other important bee product in forest areas is beeswax which also has commercial value for cosmetic, industrial and beekeeping purposes.

Honeybees are the most efficient micro-manipulators of pollen in nature and this forest product can easily be harvested by putting a pollen trap at the entrance of bee hive. Pollen is now becoming popular for human consumption as nutritional and therapeutic dietary supplements. Keeping in view the growing demands for vegetarian food, the use of pollen as protein supplement in the human diet will become more important. However, pollen collected by honeybees has not been exploited for commercial uses in India. In developed countries, the value of different bee products harvested from forests are three times more than from cultivated crops. This paper will deal at length the major constraints and potentials for commercial production of these bee products from different forest ecosystems in India.

Besides above, honeybees also contribute immeasurably through cross pollination to the maintenance of wild-life, prevention of soil erosion, conservation of diversified germ-plasm and in enhancing the carrying capacity of forest ecosystems. In forest community, these social insects ensure the reproduction and propagation of many under storey herbs and shrubs. In ICIMOD, we now plan to build computer assisted pollen data bank/library through analyses of bee collected pollen loads and honey. This may prove highly useful and efficient tool for monitoring bio-diversity in forest ecosystems.

Impact of Food Resource Availability on Growth and Development of *Apis cerana* in Kathmandu Valley of Nepal

Uma Partap and L.R. Verma

International Centre for Integrated Mountain Development (ICIMOD)
P.O. Box 3226, Kathmandu, Nepal

The Asian hive bee, *Apis cerana* is more close to the tropical African honey bee *Apis mellifera scutellata* in certain biological and economic characteristics. Unlike temperate races of *Apis mellifera*, these tropical/subtropical native honeybees raise brood throughout the year, exhibit no tendency to amass large food resources for winter survival and have frequent absconding and swarming habits. Seasonal growth and development of temperate races of *Apis mellifera* have been studied in great details (Seeley, 1985; Winston, 1987). In recent years, scientific research on *Apis mellifera scutellata* after its introduction and spread in western hemisphere has also drawn the attentions of several researchers (Rinderer, 1988; Schneider and Blyther, 1988, McNally and Schneider, 1992, Schneider and McNally, 1992). However, *Apis cerana* still remains scientifically neglected species and is threatened with extinction throughout its entire range despite its great potentials for commercial purposes especially as a pollinator of agricultural crops (Verma, 1990).

In the present investigations, seasonal cycles of growth and development of *Apis cerana* under ecological conditions of Kathmandu valley, Nepal have been investigated where beekeeping with this native bee species is a centuries old tradition.

Materials and Methods

Seasonal Patterns of Forage Availability

This study was conducted from September 1991 to August 1992 in Kathmandu valley of Nepal (Latitude 27°70', Longitude 85°33' and Altitude 1336 m above sea level). Climate of the valley is sub-temperate with maximum temperature 34 $\pm$ 2°C in summer and 16 $\pm$ 2°C in winter and annual rainfall 1261 mm. Winters are generally dry and rainfall occurs from June to September.

Forage availability was estimated by conducting monthly vegetational surveys of the number of blooming trees, shrubs and weeds. Such survey for trees and shrubs was conducted in 3 plots of 1000 m^2 square area around three apiaries located 5 km apart. Each month total number of blooming trees and shrubs was recorded around each apiary site. The utilization of a species by honeybees was determined through direct observations or through published reports of plants visited by *Apis cerana* (Kafle, 1984, Maskey, 1992).

168

Vegetational surveys for weeds/annuals were conducted by establishing 30 transacts 25 m long; 10 transacts around each apiary. After every three weeks, the total number of blooming weeds were counted throughout the year. Each species of blooming plant was assigned a "bloom value" according to the method of McNally and Schneider (1992). These authors used the following scale for the estimated number of flowers per plant. 1(1-100); 2(101-500); 3(501-1000); 4(1001-2000) as S(> 2000). Each month, the bloom value for all individual plants were totaled for each plot and transact.

Food resource availability pattern in the present investigation was further supplemented with colony performance index (CPI) studies based on number of foragers returning with pollen loads in different hours of the day as well during different months of the year. These observations were also taken at an interval of three weeks and CPI was calculated as follows using the method of Punchiheva et al. (1990).

$$CPI = \frac{(F_p)^2}{T_{obs} \times F_t} \times 100$$

F_p = Total number of foragers returning with pollen loads

F_t = Total number of returning foragers

T_{obs} = Observational period in seconds

According to Punchihewa et al (1990), one of the distinct characters of a colony in preparation for absconding is the reduced number of pollen foragers.

Seasonal pattern of colony growth, development and movement

Experiments were performed on 20 observational colonies kept in Kathmandu city (study site I), Godamchor (study site II) and in Godavari (study site III) located at 5 km from one another. To determine seasonal/annual cycle of colony growth and development observations recorded on total comb area (in cm^2) and the proportion of comb area devoted to brood rearing and food (honey and pollen) after every three weeks.

In order to know whether a colony exhibited characteristics of reproductive swarming, colonies were examined every week and counted number of queen cells constructed by the colony and area (cm^2) under drone brood was recorded, because a colony is considered to be preparing for reproductive swarming it has constructed queen cells and drone brood. Further, we also noted if a colony is recently swarmed if it has a reduced worker population and remanents of queen cells from which virgin queen had recently emerged. Moreover we also noted if the recently

swarmed colony is successfully requeened or failed to requeen by observing if it had a queen and eggs present or not.

In addition the above, we also examined the other characteristics of the colony which are related to absconding. According to Woyke (1976); Winston et al (1979); Schneider (1990) the egg laying activity of queen is reduced and workers start consuming younger larvae and food resources several weeks before absconding. So the colonies preparing for absconding contain few eggs, no young larvae and increasing amount of empty combs. A colony is considered to be preparing for absconding if (i) less than one fourth of the total comb area is devoted to brood, (ii) brood consists mainly of eggs and pupae with few or no young larvae and (iii) at least half of the comb is empty. So we compared the absconding or non absconding colonies with respect to (i) proportion of comb area devoted to brood and food and (ii) CPI values. This comparison was restricted to the colonies preparing for absconding because once the colony is absconded it leaves behind no food and brood.

All the data are analyzed statistically using students 't' test.

Results

Table 1, lists important pollen and nectar plants blooming during different months of the year. Table shows that the bee forage is available during all the months of the year however relative abundance of flowering plants varies. Mean bloom values for trees, shrubs and weeds are plotted in Fig 1 (A). This figure shows that relatively more forge was available during March to October. It is during these months most of the colonies (10% - 50%) showed the characteristics of swarming Fig. 1(B). Some colonies (10%) showed the characteristics of swarming even in February. During the months of November to February comparatively less forage was available and the colonies did not show any characteristics of swarming.

During the months from March to November colonies stored more food (pollen and nectar) and reared more brood. During these months 30% - 50% of the total comb area was devoted to food (pollen and honey) storage and 40% - 60% of the total comb area was devoted to brood rearing Fig. 1(C). During the months of December to February only 6-35 percent of comb area was devoted to brood rearing and 20-35 percent of the comb area was devoted to food storage. Colony performance index (CPI) of the colonies also showed higher values during these months ie. March to November. As mentioned earlier CPI of a colony depends upon the number of foragers bringing pollen and this ultimately related to the forage availability to bees and amount of brood. During these months CPI values ranged between 8 to 18 with maximum in September. During other months of the year (December-February) CPI values were below 5 with minimum value 0.5 in January (Fig. 2).

Swarming occurred during different months of the year. *Apis cerana* colonies preparing for swarming showed the characteristics such as queen cell construction and drone brood rearing. Of observational colonies 10% swarmed in February, 50% in March, 20% in April, 10% in May 20% in June, 20% July, 20% in August and 40% in October (fig. 1A) showed

BEST AVAILABLE DOCUMENT

characteristics of reproductive swarming. Four colonies swarmed in March and four in October. All the colonies which swarmed were successfully requeened.

Absconding in present study occurred in March, April and November. 40% colonies absconded in March and 20% each absconded in April and November (Fig 1 (B). Colonies which were infected with virus either absconded or tried to abscond. Seasonal migration absconding did not occur during the present study and the absconding occurred was not related to the unavailability of floral resources.

We also compared the proportions of comb area devoted to pollen, honey and brood rearing and CPI of the normal and absconding colonies for the month of February because most of the colonies absconded in the March. Data is presented in table 2. Non absconding (normal) colonies had significantly more comb area devoted to food (nectar and pollen) storage and brood rearing and higher CPI value as compared to the absconding colonies.

Discussion

The Asian hive bee *Apis cerana* showed distinct pattern of growth and development in Kathmandu valley of Nepal which was associated with the changes in the availability of floral resources in the valley. During the months from March to November when sufficient forage was available to the bees, colonies collected maximum amount of pollen and nectar, reared maximum amount of brood and then swarmed (Fig. 1 A, B and C). CPI of the colonies was also higher during these months (Fig 2). During the months from December to February relatively less forage was available to the bees and therefore during these months the colonies reared less brood and did not reproduce except for the month of February during which few (only 10%) of the colonies exhibited characteristics of swarming (Fig. 1 A, B and C).

Availability and collection of food (i.e. pollen and nectar) has been shown to affect the growth and development of bee colonies. A significant positive correlation between the amount of pollen stored and brood in *Apis mellifera* colonies was observed by Rosenthal et al (1971), Al-Tikrity et al (1972) and McNally and Schneider (1992). Pollen collection and honey yield is also reported to have a significant positive correlation with prolificness in this bee species (Cale, 1968; Moeller, 1958).

Similarly, in *Apis cerana* also, Verma et al (1985) reported that the prolificness and total brood area was positively correlated with the pollen stores, honey yield as well as with the foraging efficiency of the colonies. these workers also found a significant positive correlation between the foraging efficiency and the prolificness in this bee species. Similarly Woyke (1976) reported a significant positive correlation between the honey yield and brood rearing capacity in *Apis cerana indica* and reported that the nectar and pollen flow enhances the brood rearing in colonies of this bee species. Reddy (1980) also found the direct effect of pollen stores on brood rearing capacity of *Apis cerana indica* colonies

171

References

Al-Tikrity, W.S., Hillman, R.C.; Benton, A.W. and Clarke, W.W.Jr., 1971. A new instrument for brood measurement in a honeybee colony. Am. Bee. J. 111: 20-21, 26. Butter, C.G., 1974. *The World of Honeybee* London.

Cale, G.H., 1968. Pollen gathering relationship to honey collection and egg laying honeybees. Am. Bee J. 108: 8-9.

Erickson, E.H.; Whitefoot, L.O. and Kissinger, W.A., 1973. Honeybees: A method of delimiting the complete profile of foraging from colonies. Envir. Ent. 2:531-533.

Frisch K.Von., 1976. *The Dance Language and Orientation of Bees*. Cambridge, MA, USA: Harvard University Press.

Hambleton, J.I., 1925. The effect of weather upon the change in weight of a colony of bees during the honey flow. Bull. US. Dept. Agric. No. 1339.

Kafle, G.P., 1992. Salient features of beekeeping in Nepal. In: *Honeybees in Mountain Agriculture*. ed L.R. Verma. Oxford and IBH Publishing Co. New Delhi.

Kafle, G.P., 1984. Bee forage in and around Kathmandu valley. Nepalese J. Agri. 15: 89-99.

Maskey, M., 1992. Mountain women and beekeeping in Nepal. In: *Honeybees in Mountain Agriculture*. ed L.R. Verma, Oxford and IBH Publishing Co., New Delhi.

Moeller, F.E., 1958. Relation between egg laying capacity of queen bees and populations and honey production of their colonies. Am. Bee J. 98: 401-402.

McNally, L.C. and Schneider, S.S., 1992. Seasonal cycles of growth, development and movement of the African honeybee, *Apis mellifera scutellata*, in Africa. Ins. Soc. 39: 167-179.

Nightingale, J., 1976. Traditional beekeeping among Kenya tribes and methods proposed for improvement and moderation. In: *Apiculture in Tropical Climates*. ed. E. Crane. International Bee Research Association, London, pp. 15-22.

Punchihewa, R.W.K., Koeniger, N., and Howpage, D. 1990. Absconding behaviour of *Apis cerana* in Srilanka. In: *Social Insects and the Environment*. Eds. G.K. Veeresh, B. Mallik and C.A. Viraktamath. IUSSI ,India.

Reddy, C.C., 1980. Observations on the annual cycle of foraging and brood rearing by *Apis cerana indica* colonies. J. Apic. Res. 19: 17-20.

172

Rinderer, T.E., 1988. Evolutionary aspects of the Africanization of honeybee populations in the Americans. In: *Africanized Honey Bee and Bee Mites*. eds: G.R. Needham, R.R. Page Jr., M. Delfinedo - Baker and C.E. Bownan. Ellis Horwood Ltd. Chichester, pp. 13-28.

Rosenthal, C., Chiva, R. and Caragiani, S., 1971. Observations on the dynamics of the pollen stores in the brood nest. Apic. Bucuresti 24:2-5.

Schneider, S.S., 1990. Nest characteristics and recruitment behaviour of absconding colonies of the African honey bee *Apis mellifera scutellata* in Africa. J. Insect. Behav. 3: 225-240.

Schneider, S.S and Blyther, R., 1988. The habitat and nesting biology of the African honeybee *Apis mellifera scutellata* in the Okavango River Delta, Botswana, Africa. Ins. Soc. 35: 167-181.

Seeley, T.D., 1985. *Honeybee Ecology*. Princeton Univ. Press, Princeton, New Jercy, p. 201.

Shuel, R.W., 1955. Nectar Secretion. Am Bee J. 95: 229-234.

Verma, L. R., 1990. *Beekeeping in Integrated Mountain Development: Economic and Scientific Perspectives*. Oxford and IBH Publishing Co. New Delhi.

Verma, L.R., Mattu, V.K. and Rana, B.S., 1985. Studies on genetic improvement of Indian honeybee *Apis cerana indica* F. by selection and breeding. Report submitted to DST, Govt. of India. pp. 155.

Wafa, A.K. and Ibrahim, S.H., 1957. Temperature as a factor affecting pollen gathering activity by the honeybees. Egypt. Bull. Fac. Agri. Ain Shams Univ. No. 163.

Wafa, A.K. and Ibrahim, S.H., 1958. Temperature as a factor affecting nectar gathering activity in honeybees. Egypt. Bull. Fac. Agri. Ain Shams Univ. No. 164.

Winston, M.L., 1987. *The Biology of Honeybee*. Harvard Univ. Press, Cambridge. Massachusetts 281 p.

Winston, M.L., Otis, G.W. and Taylor, O. 1979. Absconding behaviour of the Africanized honeybee in South America. ', Apic. Res. 18: 85-94.

173

Table 1: List of important nectar and pollen yielding plants flowering during different months of the year at different study sites in Kathmandu valley of Nepal

MONTH	TREES AND SHRUBS	WEEDS
January	*Dalbergia sissoo, Eryobotrya spp.*	*Carthamus tinctorius, Chenopodium spp., Colebrookia oppositifolia, Datura spp., Occimum spp.*
February	*Adhatoda vasica, Berberis spp., Castanopsis spp., Citrus spp., Eriobotrya spp., Pyracantha crenmulata, Prunus cornuta*	*Brassica nigra, Brassica oleracea, Brassica rapa, Calendula spp., Carthamus tinctorius, Chenopodium spp., Colebrookia oppositifolia, Datura spp., Fragaria indica, Medicago sativa, Ocimum spp., Rosa spp., Solanum spp., Trifolium repens, Vicia spp.*
March	*Adhatoda vasica, Albizzia lebbek, Berberis aristata, B. asiatica, Bauhina variegata, Buddleia asiatica, Cinnamomum camphora, Citrus spp., Dalbergia sissoo, Eriobotrya spp., Eucalyptus spp., Leucosceptrum canum*	*Berberis spp., Brassica nigra, B. oleracea, B. rapa, Calendula spp., Cannabis sativa, Chenopodium spp., Colebrookia oppositifolia, Coriandrum sativum, Datura spp., Fragaria indica.*
April	*Bauhinia variegata, Callistemon lanceolatus, Citrus spp., Grevillia robusta, Jacaranda mimosifolia, Melia azedirach, Rubus ellipticus*	*Brassica campestris, Brassica oleracea, Brassica rapa, Calendula spp., Coriandrum sativum, Trifolium repens.*
May	*Berberis aristata, B. asiatica, Bauhinia variegata, Callistemon lanceolatus, Grevillea robusta, Jacaranda mimosifolia, Melia azedarach, Psidium guajava, Rubus ellipticus*	*Brassica campestris, Cannabis sativa, Coriandrum sativum, Cucumis sativus, Lagenaria siceraria, Trifolium repens.*
June	*Berberis aristata, B. asiatica, Jacaranda mimosifolia, Lagerstroemia spp., Psidium guajava, Rubus spp.*	*Brassica campestris, Cannabis sativa, Cucurbita spp., Lagenaria siceraria, Luffa aegyptica, Trifolium repens*

174

July	*Cassia spp., Castanopsis spp., Eucalyptus spp., Psidium guajava, Punica granatum, Rubus ellipticus, Vitex spp.*	*Brassica campestris, Allium spp., Cannabis sativa, Capsicum spp., Chrysanthemum spp., Cucurbita spp., Lagenaria siceraria, Luffa aegyptica, Oxalis corniculata, Solanum spp., Trifolium repens.*
August	*Bauhinia purpurea, Callistemon lanceolatus, Castanopsis spp., Eucalyptus spp., Lagerstroemia spp., Punica granatum, Rubus ellipticus, Vitex spp., Zizyphus spp.*	*Allium spp., Cannabis sativa, Capsicum spp., Chrysanthemum spp., Fagopyrum spp., Luffa aegyptica, Oxalis corniculata, Solanum spp.*
September	*Bauhinia purpurea, Castanopsis spp., Eucalyptus spp., Lagerstroemia spp., Poinsettia pulcherima, Rosa spp., Rubus ellipticus, Vitex spp.*	*Cannabis sativa, Capsicum spp., Chrysanthemum spp., Eleusine coracana, Fagopyrum spp., Salvia spp., Solanum spp.*
October	*Bauhinia purpurea, Eucalyptus spp., Poinsettia pulcherima, Rubus ellipticus, Vitex spp.*	*Brassica juncea, Cannabis sativa, Chrysanthemum spp., Eleusine coracana, Fagopyrum spp., Oxalis corniculeta, Solanum spp.*
November	*Bauhinia purpurea, Eriobotrya spp., Prunus cerassoides, Rosa spp.*	*Brassica juncea, Cannabis sativus, Chrysanthemum spp., Fagopyrum spp., Oxalis corniculata, Solanum spp.*
December	*Bauhinia purpurea, Eribotrya spp., Prunus cerassoides*	*Cannabis sativus, Chenopodium spp., Oxalis spp.*

Seasonal Patterns of Foraging Activity in Colonies of Asian Hive Bee *Apis cerana* F. in Kathmandu Valley of Nepal

L.R. Verma and Uma Partap

International Centre for Integrated Mountain Development (ICIMOD)
P.O. Box 3236, Kathmandu, Nepal

Introduction

Information about the foraging behaviour of *Apis cerana* under the agro-climatic conditions of an area is important for developing appropriate apiary management practices in order to make this bee species commercially more viable. Very little is known at present in the literature covering this subject compared to volumes of material/information specific to *Apis mellifera*. Kathmandu valley of Nepal offers good potentials for beekeeping with *Apis cerana* due to sustainable climatic conditions and diversity of bee floral resources available throughout the year. Maskey (1992) and Kafle (1984, 1992) have listed the pollen and nectar yielding plants of Kathmandu valley of Nepal. However detailed systematic studies on foraging behaviour of this native bee species, under the agro-climatic conditions of Kathmandu valley on monthly/seasonal basis as well as in relation to brood production and reproductive swarming has not been made. In the present paper, the results of these studies are reported.

Materials and Method

The study was conducted from September, 1991 to August, 1992 at ICIMOD apiary located in Kathmandu valley of Nepal (lat. 27°70' long. 85°33', alt. 1336 m above sea level).

Foraging activity was investigated using a total of seven colonies of *Apis cerana*. Strength of these colonies varied from five to ten frames covered with adult bees depending upon the availability of flora and weather conditions during the different months of year. During good honey flow season, all colonies were provided with supers. Any colony showing sign of disease (especially sac brood virus disease) or mite attacks were excluded from the experiment.

Foraging activity patterns and its relationship to brood production, prolificness and reproductive swarming were examined by estimating the following activities during different months.

- initiation, cessation and peak hours of foraging
- percentage of pollen collecting bees during different hours of the day
- number and duration of foraging trip/day
- weight of pollen loads collected during different hours of the day

176

- ratio of pollen and nectar collectors during different hours
- drone rearing and queen cell construction
- percent comb area covered under honey, pollen and brood
- prolificness

Initiation and cessation of foraging activity was studied when first bee left the hive in the morning and last bee returned in the evening. Peak hours of foraging activity were estimated by conducting five, 3-minutes counts every hour throughout the foraging period of the day. Duration of each foraging trip was determined by marking 25 foraging bees with numbered disc markers and recording the amount of time spent by each forager outside the hive during a single foraging trip. Number of trips each bee made per day were also monitored in a similar way.

Weight of pollen loads carried by returning bees were determined according to the method of Frisch (1967). In order to differentiate between nectar and pollen collectors, returning bees were collected with the help of an aspirator at the hive entrance and frozen to prevent regurgitation of the nectar. The frozen bees were sorted out for the type of forage following the method of Erickson et.al. (1973).

Proportions of comb area devoted to pollen, honey and total brood were estimated at an interval of 21 days, for all experimental colonies using a grid fixed on a frame and expressed in sq. cm (Al-Tikrity et. al 1971). Similarly estimation of egg laying rate in *Apis cerana* were made by multiplying total brood area on 21st day by a factor of four because this bee species makes 4 cells in one sq.cm of brood comb. Dividing this figure by 21 gives an estimate of daily egg laying rate by a queen bee. Presence of queen cells and drone brood area was also monitored on every 21st day.

Results

Figure 1 shows that May, June and July were the most active foraging months for *Apis cerana* because this bees species started foraging early in the morning during these months (range 0523 to 0536 h) and ceased late in the evening (range 1847 to 1902 h). Thus daily total foraging hours during these months varied from 13.36 to 13.56. On the contrary, November, December and January were the slack months for bees activities because this species started foraging late in the morning (range 0647-0702 h) and ceased early in the evening (range 1727 to 1747 h) and daily foraging hours varied from 10.35 to 10.45 h.

Peak hours of foraging activities as judged by number of incoming bees per minute during different hours of the day varied in different months. For example, during May-June, peak foraging hours were observed at 0900 h but in December, same were at 1300 h. Environmental temperatures and relative humidity during peak hours in May-June were 25 to 29°C and from 64 to 97 per cent whereas in December these climatic parameters varied from 17 to 20°C and 59 to 70 percent respectively.

171

Maximum total brood area (2505 to 2895 sq cm) and egg laying rate (range 477-551 eggs per day) were observed during May-June or September-October and minimum during December and January (total brood area range 341-698 sq cm daily prolificness range 65-133).

Maximum comb area covered under pollen was observed during October-November or February-March (583-753 sq cm) and minimum in December and January (122-162 sq cm). Maximum area under honey and total food (honey+pollen stores) was in May and October to December (1624-2529 sq cm) and minimum in January. Throughout the year, more area was under brood than under pollen but total food area (honey+pollen) more than total brood area throughout the year.

Data on colony performance index (CPI) calculated on the basis of number of incoming foragers revealed that May and July to September showed CPI values greater than 12 and these values were minimum during December to February (0.7 to 4.2).

During the months of July to September, maximum strength of (10 frames) colonies was observed and during January the strength of the colonies were minimum 6 frames. *Apis cerana* colonies constructed maximum number of queen cells in March; from June to August and in October and drone brood also covered maximum area during these months.

The lowest temperature recorded when *Apis cerana* initiated its foraging activity in the morning varied from 4 to 8°C with relative humidity range from 95 to 100 percent during November, December and January. The lowest temperature recorded when this bee species ceased foraging activities was 16°C in the evening and relative humidity ranged from 65 to 70 percent.

On an average, *Apis cerana* carried heaviest pollen loads at noon hours than in the morning or evening hours. Also heavier pollen loads were collected from May to September (range 8.7 to 11.2 mg) and minimum values for pollen loads collection were recorded during January and February (5.2 to 6.6 mg).

Number of foraging trips per day varied from 6 to 12 with maximum in April-May and August to November (10-12) and minimum during January and February (6-8). The duration of each foraging trip differed from 20 to 28.2 minutes during different month of the year.

At 0900 h, pollen collectors outnumbered nectar collectors except in December, January and Feb; at 1200 h either this rate was equal in March to May and July or pollen collectors out numbered nectar collectors (July, August, October and November) except in December, January and September when nectar collectors exceeded the rate of pollen collectors. At 1500 hrs nectar collectors outnumbered pollen collectors from March to August and September, ratio was equal in November and in October pollen collectors exceeded the rate of nectar collectors.

Discussion

Results of the present investigation show that the foraging behaviour of *Apis cerana* in Kathmandu valley of Nepal is greatly influenced by the environmental factors which also affect the forage availability to honeybees (Kafle, 1991). Initiation, cessation and peak hours of

178

foraging activity occurred much earlier in summer months than that in winter months. Duration of foraging is also longer in summer months than that in winter months. This is because of the environmental factors such as temperature, relative humidity and day length. In summer, the days are long so bees could work for long time starting early in the morning and ceasing late in the evening. In winter, the days (day length) is short and mornings and evenings are very cool for the bees to forage.

Another reason for this seasonal change in foraging activity is the seasonal variation in the timing of nectar/pollen production by the plants which is influenced by the environmental factors such as temperature, relative humidity and rainfall. Butler (1974) reported that differences in environmental conditions account for the differences in nectar secreted by the flowers of even the same variety of apple trees in different areas. Other investigators also reported that temperature seems to be a particularly important factor in limiting both nectar and pollen availability (Hambleton, 1925; Shuel, 1955; Wafa and Ibrahim, 1957;1958).

Second main finding is that in Kathmandu valley of Nepal, honeybees *Apis cerana* could forage and that these collected pollen (however less in winter) during each month of the year. Pollen collection dominated foraging activity can be positively correlated to the brood rearing activity. This pollen provides the protein and fats necessary for brood rearing (Winston, 1987). Colonies of *Apis cerana* collected more pollen during March-November and reared more brood during these months whereas during December-February less pollen was available for the colonies and these could rear less brood (figure....).

Colonies during March to November collected and stored much food (pollen and nectar). During these months bees also reared much brood. During December-February bees stored less food and reared less brood. Thus there existed a positive correlation between food storage and brood rearing (figure 3). Moreover much forage/floral resources were available to these bees during March-October, but during December-February forage availability to bees were scarce. Another important factor of winter was very low temperatures due to which bees could not collect sufficient food.

The observational/experimental colonies showed some important characteristics of the seasonal activity patterns. First as explained earlier, colonies can forage throughout the year. This prolonged foraging season may contribute to (i) increased brood rearing (fig.3) and (ii) reproductive swarming (table 4). The experimental colonies showed brood rearing activity in all the month of the year (even in very cool months of December and January). Extended periods of brood rearing in turn resulted in reproductive swarming (table 4); which is considered as the most undesirable characteristic of Asian honeybee *Apis cerana*.

Acknowledgement

The authors thank Mr. Prem Thapa, beekeeper for his technical help. This research was supported under Grant No. 367-5600-G-SS-1147-00, Programme in Science and Technology Co-operation, Office of the Science Advisor, U.S. Agency for International Development.

References

Al-Tikrity, W.S., Hillman, R.C.; Benton, A.W. and Clarke, W.W.Jr., 1971. A new instrument for brood measurement in a honeybee colony. Am B.J. 111: 20-21, 26. Butter, C.G., 1974. The World of Honeybee London.

Erickson, E.H.; Whitefoot, L.O. and Kissinger, W.A., 1973. Honeybees: A method of delimiting the complete profile of foraging from colonies. Envir. Ent. 2:531-533.

Frisch K.Von., 1976. *The Dance Language and Orientation of Bees*. Cambridge, MA, USA: Harvard University Press.

Hambleton, J.I., 1925. The effect of weather upon the change in weight of a colony of bees during the honey flow. Bull. US. Dept. Agric. No. 1339.

Kafle, G.P., 1992. Salient features of beekeeping in Nepal. In: Honeybees in Mountain Agriculture ed L.R. Verma. Oxford and IBH Publishing Co. New Delhi.

Kafle, G.P., 1984. Bee forage in and around Kathmandu valley. Nepalese J. Agri. 15: 89-99.

Maskey, M., 1992. Mountain women and beekeeping in Nepal. In: Honeybees in Mountain Agriculture. ed L.R. Verma, Oxford and IBH Publishing Co., New Delhi.

Shuel, R.W., 1955. Nectar Secretion. Am Bee J. 95: 229-234.

Wafa, A.K. and Ibrahim, S.H., 1957. Temperature as a factor affecting pollen gathering activity by the honeybees. Egypt. Bull. Fac. Agri. Ain Shams Univ. No. 163.

Wafa, A.K. and Ibrahim, S.H., 1958. Temperature as a factor affecting nectar gathering activity in honeybees. Egypt. Bull. Fac. Agri. Ain Shams Univ. No. 164.

Winston, M.L., 1987. The Biology of Honeybee. Harvard Univ. Press, Cambridge. Massachusetts 281 p.

Priorities in R&D on Beekeeping in Tropical Asia
Proc. BEENET Asia: Workshop on Priorities in R&D on Beekeeping in Tropical Asia, Serdang, Malaysia, 1992. pp. 75-88.

MS # 23

A Framework for R & D on Beekeeping with Asian Hive Bee *Apis cerana*

L.R. Verma
International Centre for Integrated Mountain Development
(ICIMOD), P.O. Box 3226, Kathmandu, Nepal

Introduction

Beekeeping is becoming an important component of present strategies for sustainable mountain agriculture and integrated rural development programmes.

The role of beekeeping in providing food, nutritional, economic and ecological security to rural communities, especially those living in the developing countries of Asia, cannot be overlooked as it has always been linked with the cultural and natural heritage of rural communities. This, being a non-land based activity, does not compete with other resources demanding components of farming systems. At micro level, beekeeping is an additional income-generating activity and at macro-level, investment may be quite high but there is greater use of temporal and spatial diversity of natural resources such as pollen and nectar that otherwise go unutilised.

The pollination activities of honeybees are an important integration function, as they contribute to the sustainability and diversity of agricultural and botanical resources in general, and thereby contribute to increased productivity and environmental health (Verma, 1990 a).

The South and South-East Asian region is rich in honeybee species and genetic diversity. Amongst the different honeybee species, the Asian hive bee *Apis cerana* is equivalent to the European honeybee, *Apis mellifera* because both can be domesticated and build parallel combs. Great strides in modernising beekeeping with the native and exotic honeybee species are being made in different eco-geographic zones (temperate, sub-temperate, and subtropical) of the region.

BEST AVAILABLE DOCUMENT

China at present is one of the major producer and exporter of honey and other hive products in the world. Similarly, India, has taken the lead in South and South-East Asia utilising honeybees for pollination purposes to boost yield and improve quality. In other countries of the region initiative efforts are being made to develop beekeeping on modern scientific lines. However, due to constraints such as lack of basic infrastructure, skilled manpower, training extension facilities or basic and applied research programmes, the situation is far from satisfactory despite ideal climatic conditions and availability of diverse floral resources throughout the year. It is in the light of these observations, an attempt has been made in the present paper to suggest a practical framework for the improvement of *Apis cerana* beekeeping in Asia (Verma, 1992 a).

The Amount of Apis cerana Genetic Diversity

The genetic diversity of *Apis mellifera* has been organised into 24 sub-species having varied economic usefulness. These sub-species are adapted to a wide range of ecological conditions and at latitude ranging from 0° at equator to latitude as high as 50°N and 30°S. So far only four sub-species of *Apis cerana* are recognised, although there may be several more because of its wide range of geographic distribution (Ruttner, 1987).

Our research group in ICIMOD has successfully identified genetic variance in morphological characters of *Apis cerana* and confirmed the accepted distribution of *A. cerana* sub-species in the Himalayan region. These sub-species have been named as *A cerana cerana, A himalaya, A cerana indica* (Verma, 1992b.) According to a survey conducted by bee scientists in China, five different sub-species of *A cerana* representing different eco-geographic zones have been identified. These include *A cerana cerana, Apis cerana skorikovi, Apis cerana abacensis, Apis cerana hainanensis* and *Apis cerana indica*. (Zhen-ming *et. al.*, 1992).

Each sub-species has further locally adapted populations called ecotypes which differ from each other in several biological and economic characters. For example, we have successfully identified three ecotypes of sub-species *Apis cerana* Himalaya that correspond to geographic distribution in the Naga and Mizo Hills, Brahmputra valley and Khasi Hills, and the foothills of the NorthEast Himalayas (Singh, *et.al.*, 1990). On similar lines, Chinese bee scientists have also

classified sub-species *Apis cerana cerana* into 5 ecotypes namely, Guangdong-Guanxi type, Yunan type, North China type and Changbaishan type (Zhen-ming *et al*,. 1992).

In some parts of Hindu Kush Himalaya, *Apis cerana cerana* matches European hive bee *Apis mellifera* in commercial use value and has spectacular potentials for further genetic improvement by selective breeding and molecular research.

How much Genetic Diversity is Being Lost

Despite its economic usefulness, beekeeping with native Asian hive bee, *Apis cerana* is suffering precipitous decline and is threatened with extinction in its entire native habitat. For example, in Japan, beekeeping with *Apis cerana* has been completely replaced by European hive bee *Apis mellifera* and only a few beekeepers and research institutes are raising *Apis cerana* colonies (Sakai, 1992). In China out of more than 8.5 million colonies of honeybees kept in modern hives, 70 per cent are European *Apis mellifera* and only 30 per cent are native *Apis cerana* (Zhen-ming *et. al.*, 1992). Similarly in South Korea, only 16 per cent beekeeping is with native *Apis cerana* and the remaining has been replaced by exotic *Apis mellifera* (Choi, 1984).

Recent survey conducted by author as a part of USAID funded regional Project in ICIMOD reveal that in Hindu Kush- Himalayan countries, beekeeping with native *Apis cerana* is being replaced by *Apis mellifera* at such a fast rate that populations of native *Apis cerana* is declining to a level that is no longer viable.

These countries include Afghanistan, Bhutan, Burma, Nepal, India and Pakistan. In a small north-Indian state of Himachal Pradesh, which has a centuries old tradition of beekeeping with *Apis cerana*, all the 43 beekeeping development and extension centres have been replaced by *Apis mellifera*. Even in Kashmir region of North-West Himalayas, where *Apis cerana* matches *Apis mellifera* in body size and honey production, only a few per cent of native *Apis cerana* colonies are left which may soon be wiped out. A visit to some mountain areas of North West Frontier Province of Pakistan in May 1989, led Dr. Eva Crane to conclude that *Apis cerana* populations may soon become an endan-

183

gered species (Crane, 1992). Thus the existing long established craft of beekeeping with *Apis cerana* will soon get destroyed in the entire Hindu Kush-Himalaya region.

Causes and Consequences of Declining Genetic Diversity

In seeking ways to conserve genetic diversity of *Apis cerana* it is necessary to have a clear understanding of the major threats which this bee species is facing in its own native habitat. Like any other threatened biological resources, decline in Apis cerana populations is also being caused by human mismanagement, misguided economic policies and faulty institutions.

The major threat comes from its replacement with exotic and more prolific *Apis mellifera*, habitat alteration, pesticide poisoning, diseases and enemies particularly recurrence of sacbrood virus disease and human predations especially through traditional honey hunting methods. While the consequence of a decline in *Apis cerana* populations throughout Asia can only be speculated at, it is clear that such decline is undesirable in terms of economic development, maintenance of biodiversity in natural ecosystems and productivity of farming ecosystems it is, therefore, essential to raise and discuss related to population vulnerability analysis and threatened extinction of *Apis cerana*.

According to Gilpin and Soule, (1986), loss of genetic diversity of a species leading to its extinction is a systems Phenomenon involving the interaction of processes and states. It is to be based on three interacting fields i.e. Population phenotype (PP), Environment (E) and Population Structure and Fitness (PFS). When such model is applied in relation to loss of genetic diversity in *Apis cerana*, the first field (PP) includes behavioural and genetic components such as frequent swarming and robbing, production of large number of laying workers, inbreeding depression and drift inbreeding. A second field, the environment (E) is the context. It includes all biotic and biotic factors that influence the population. In case of *Apis cerana* the loss of habitat quantity and quality as a result of rapid agricultural transformation and deforestation in the region and pesticide hazards due to their indiscriminate use are important abiotic components. The biotic components include introduction of exotic *Apis mellifera* (for details please see page 80) epidemic of sacbrood virus disease and human

184

predations as a result of traditional honey hunting methods.

Population Penotype (PP) and Environment (E) together determine the third field: the Population Structure and Fitness (PSF). This is the field in which dynamic consequences of interactions of (PP) and (E) are manifested in terms of patch distribution, population fragmentation, demographic randomness, reduced effective population size, growth rate and distribution leading to stochastic and deterministic extinction. The decay in one component can exacerbate not only it self but also the behaviour of other components. Table 1 list the components of each of these fields and Figure 1 represents their overlaps and interactions schematically.

TABLE 1. *Components of Population Vulnerability Analysis in Apis Cerana*

FIELD	COMPONENT
Environmental perturbations (E)	• Loss of habitat quality and quantity • Exotic species: introduction of European honeybee *Apis mellifera* • Pathogens and parasites especially sacbrood virus infection • Human predations: traditional honey hunting methods • Pesticide hazards
Population phenotype (PP)	• Frequent swarming behaviour • Robbing behaviour • Large number of laying workers • Inbreeding depression • Drift inbreeding
Population Structure	• Patch distribution • Population fragmentation • Demographic randomness • Demographic randomness • Reduced effective population size, growth rate distribution • Stochastic and deterministic extinction

Modified from Gilpin and Soule, 1986

BEST AVAILABLE DOCUMENT

FIG. 1: *Population Vulnerability Analysis (PVA)*
Case of Apis Cerana

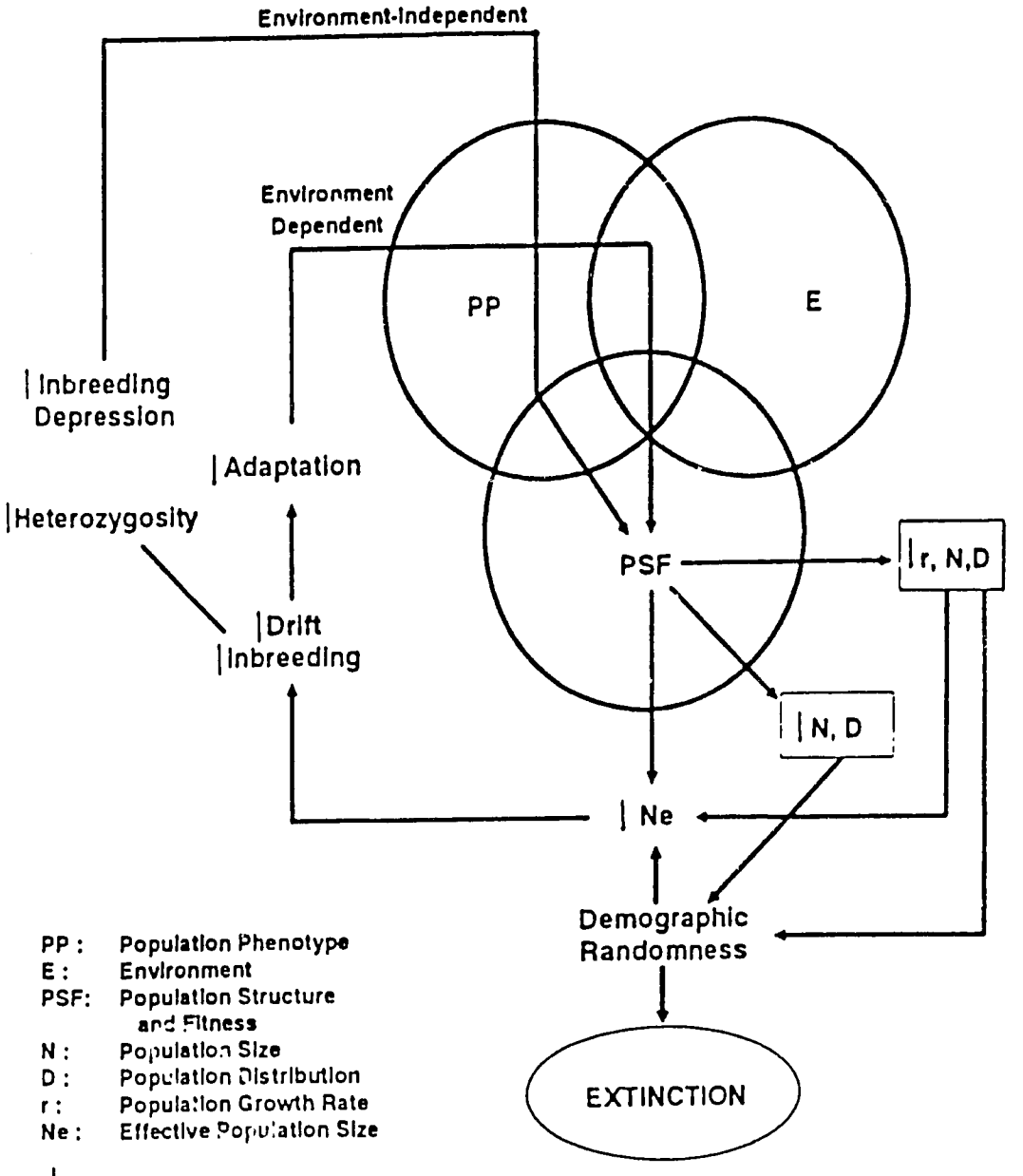

Adopted from Gilpin and Soule, 1986

BEST AVAILABLE DOCUMENT

BEST AVAILABLE DOCUMENT

Strategies for Conservation of Apis cerana Stock Improvement of Apis cerana

Many of the above mentioned sub-species/ecotypes of *Apis cerana* are at present not economically viable. Therefore selection and breeding programme of superior genotypes to produce a bee suitable for intensive management is required. To achieve stock improvement, different *Apis cerana* sub-species and ecotypes should be accumulated at a central location and superior genotypes be identified by integrating biometric and molecular data with behavioural and economic criteria. Another important pre-requisite for stock improvement is to evolve efficient queen rearing for *Apis cerana* and also establish isolated mating stations for pure line breeding. The latter is essential because artificial insemination in *Apis cerana* has unexpectedly turned out to be a difficult task due to very low volume of semen ejaculated by drones. (Verma, 1990 b).

Apiary Management and Behaviour Research

During the course of evolution, *Apis cerana* has developed certain behavioural characteristics such as frequent absconding and swarming which are essential for the survival of colonies but undesirable from beekeeping point of view.

Our research group has identified lack of sufficient bee flora, excessive handling, exposure of colonies to summer sunshine and incidence of sacbrood virus disease as major causes of absconding. Colony performance index (CPI) based on number of pollen bringing foragers can to great extent be used for predicting absconding.

Based on this criterion, this native bee species start showing symptoms of absconding even two weeks before and CPI reaches zero even a week before absconding. Management practices like feeding sugar, provision of shade providing queen gate at the hive entrance significantly reduce absconding. However, colonies affected with sacbrood virus disease show such a severe instinct of absconding that these may leave the hive even without queen bee.

One of the most effective way of reducing frequent swarming is to follow selection programme against this undesirable trait and removal of newly constructed queen cells during active swarming season also help to check it considerably.

Currently, recurrence of sacbrood virus epidemic after an earlier cycle during 1982-1986 has threatened beekeeping with *Apis cerana* throughout its range and is forcing beekeepers for its replacement by more prolific *Apis mellifera*. Some colonies are still resistant to this disease and in the absence of any effective chemical control measures, vigorous selection programme need to be followed (Verma, 1992 c).

Pollination and Biodiversity Concerns

Apis cerana is a vital component of natural ecosystem. Its decline may have serious consequences for various entomophilous plant species. This bee species shows distinct advantages over *Apis mellifera* for pollination of agricultural crops. These include longer foraging hours, earlier initiation of foraging activity even at 5o C outside environmental temperature, short flight range, low cost of colony management during dearth periods, no foraging competition with other native bee species and non-apis pollinators, co-evolution of this bee species with native crops etc. (Verma, 1992c).

Keeping in view the above, promotion of beekeeping with *Apis cerana* within a domestic setting appears to be essential for the maintenance of biodiversity of forest and grassland ecosystem and for enhancing the productivity of farming systems.

Unfortunately in developing countries of south and southeast Asia, the role of bees and beekeeping as an important biological input for enhancing the yield of agricultural crops has often been underestimated.

The sustainable development of agriculture in the twenty first century will therefore necessitate reorientation of the present crop production technologies. Instead of making substantial use of physical inputs such as chemical fertilizers, biocides, irrigation, heavy machinery etc, a shift towards biological inputs such as bee cross-pollination biological nitrogen fixation, nutrient uptake, biotechnology etc. Will become essential to increase food productivity. Moreover, such biological based agriculture will only have positive ecological consequences.

Thus, there is a need to create awareness amongst policy makers, planners and aid agencies about promoting bees and beekeeping as an important

BEST AVAILABLE DOCUMENT

component of present day strategies for sustainable agriculture and rural development programme. (Verma, 1990a.)

Zonation of Beekeeping Areas

In those countries of south and South-east Asia, where *Apis mellifera* has already been introduced, beekeeping industry is passing through a dilemma.

On the one hand, some beekeeping experts and donor agencies are of the opinion that only exotic *Apis mellifera* can bring about the "sweet Revolution" in this region in the same way as the high yielding exotic varieties of wheat are instrumental for the "Green Revolution". In northern India and North West Frontier Province of Pakistan, *Apis mellifera* has been the basis of a flourishing beekeeping industry and so much surplus honey is being produced that efficient marketing is becoming a major problem. Studies on the economic of beekeeping with native and exotic species of honeybee indicate such vast differences in the profit level that a farmer practising beekeeping with exotic *Apis mellifera* in North West Frontier Province of Pakistan can easily afford an imported car, whereas, the one continuing with native Apis cerana is still using bicycle (Verma, 1990a).

On the other hand, many importations of *Apis mellifera* in South and South-east Asia have proved disastrous. When kept sympatrically, *Apis cerana* and *Apis mellifera* colonies frequently robbed each other (Koeniger, 1982). Another cause of failing co-existence of the two species is attempted intermating which produces lethal off-spring (Ruttner and Maul, 1983). A new problem is the transfer of parasites from one species to another. A parasitic mite of brood and adults, *Varroa jacobsoni* can co-exist with *Apis cerana* and causes no serious damage to their native bee species. In several countries of Asia, where both these species are now kept together, the parasite has infested *Apis mellifera* colonies and became a serious pest to this unadapted host. There is now apprehension that through importations of *Apis mellifera*, *Apis cerana* populations in its native habitat will face serious risk of extinction.

In order to resolve the above dilemma, zonation of beekeeping areas for *Apis cerana* and *Apis mellifera* beekeeping appears to the only logical. Based on past several years of experience, it is now well documented that for sub-tropical

 BEST AVAILABLE DOCUMENT

region *Apis mellifera* especially ligustica race is well suited and is performing well. In the temperate region, beekeeping with *Apis cerana* should be encouraged as different sub-tropical region.

Such zonation of *Apis cerana* and *Apis mellifera* in different eco-geographic zones have been very successful in China and India is also following the same strategy. This would greatly solve the problem of interspecies competition and both species could be complimentary to each other.

Training and Research Centre for Asian Bees and Beekeeping

For future development of beekeeping with *Apis cerana* in South and South-East Asia, a coordinated and systematic effort by establishing a training and research centre for Asian Bee and Beekeeping in this region is essential. This Centre should have a continuing internationally funded programme in beekeeping training and research with the following mandate, objectives and organization:

Mandate and Objectives.

1. The overall objective should be to generate and deliver improved beekeeping management technology through research and training primarily on Asiatic species of honeybee that will contribute to increased production and quality of different have products (Honey, Beeswax, Royal Jelly, Propolis and Venom) as well as better bee pollination services principally to the regional needs of south and south-east Asian countries thereby ensuring a good source of income and nutritious food to rural poor communities living at or below subsistence level.

2. To assist different Government agencies, beekeeping communities and commercial enterprises to create a cadre of beekeeping experts by training them in both practical and scientific aspects of beekeeping.

3. To provide information and advisory services and also to act as a co-ordinating centre for international co-operation in beekeeping.

4. To assist different developing countries of this region to establish a national programme in beekeeping.

Organisation. The proposed centre may have three major programmes in beekeeping.

1. Research
2. Training
3. International Co-operation

Research may be carried out in the following basic and applied areas primarily on Asiatic species of honeybee.

1. Bee Biology
2. Bee Pathology
3. Bee Botany and pollination
4. Beekeeping Technology and Equipment
5. Beekeeping Economic and Marketing Hive Products
6. Apitherapy

BEST AVAILABLE DOCUMENT

Training courses both in practical and scientific aspects of beekeeping may be offered for the benefit of beekeepers beekeeping instructors, beekeeping extension personnel from the department of agriculture, forestry and rural development representing different beekeeping communities or associations, commercial enterprises and Government departments from the entire region of south and South-East Asia.

International co-operation programme will deal with technology sharing and technology transfer for the advancement of beekeeping in this region. It will organise regional training programmes, workshops, seminars, conferences and monitoring tours. It will also act as information dissemination centre by publishing extension literature for the popularization and promotion of beekeeping, advisory services to individual participating countries and on regional basis also.

All the above programmes may be carried out by keeping continuing contacts with national and international agencies. Establishment of Asian Apicultural Association (AAA) is a step forward in this direction and this organisation should take initiative efforts for the establishment of training and research centre for Asian bees and beekeeping.

The Values of Conserving Apis cerana Bio-Diversity

The natural products which honeybees produce and human now use are honey, royal jelly, pollen, propolis, beeswax and bee venom. These materials have been widely used as nutritional food and for medicinal and pharmacological purposes since ancient times.

These natural products of beekeeping industry has both consumptive and productive use value because these can be consumed directly without passing through a market and at the same time these hive products can be commercially harvested for exchange in formal markets throughout the world. Every common man is well aware of these direct values of this important biological resource.

However, besides these direct values, honeybees provide non-consumptive benefits of conserving botanical resources which may far outweigh direct values when they are computed. These social insects deal with such primary function of ecosystem which involve reproduction, including pollination, gene flow, cross-fertilisation maintenance of biodiversity, environmental forces and species that influence the acquisition of useful genetic traits in economic species and maintenance of evolutionary processes, leading to constant dynamic tension amongst the competitors in ecosystems. These non-consumptive benefits can be harnesses to maximum extent through the use of native bee species like *Apis cerana* than with exotic *Apis mellifera*.

Acknowledgement

This research was supported in part under Grant No. 367-5600-G-SS-1147-00 program in Science and Technology Co-operation, office of science Advisor, U.S. Agency for International Development.

BEST AVAILABLE DOCUMENT

References

1. Choi, S.Y. 1984 Brief report on the of Korea Beekeeping. pp 170-190. Proceedings of the Expert Consultation ed. FAO, pp. 170-190.

2. Crane, Eva. 1992. Beekeeping in mountain life support systems. In: *Honeybees in Mountain Agriculture. ed.* L.R. Verma. Oxford and IBH publishing Co. New Delhi, pp. 17-28.

3. Koeniger, N. 1982. Interactions among the four species of Apis. In: *Biology of social Insects.* ed. M.D. Breed et. al. Westview Press: Boulder, USA.

4. Gilpin, M.E. and M.E. soule. 1986. Minimum viable populations: processes of species extinction. In: *Conservation Biology. The Science of Scarcity and Diversity. ed.* M.E. soule. Sinauer Associates, Inc. publishers, Sunderland, Massachusetts, pp. 19-34.

5. Ruttner, F. 1987, Biogeographic and Taxonomy of Honeybee. Berlin: Springer Verlag. Ruttner, F. and V. Maul. 1983. Experimental analysis of reproductive interspecies isolation of Apis mellifera and Apis cerana Apidologie 14:309-324.

6. Sakai, T. 1992. *Apis cerana* beekeeping in Japan in: *Honeybees in Mountain Agriculture.* ed. L.R. Verma. Oxford and IBH publishing Co. New Delhi pp, 235-238.

7. Singh, M.P., L.R. Verma and H.V. Daly, 1990. Morphometric analysis of the Indian honeybee in the northeast Himalayan region. *J. Apic. Res.* 29:3-14.

8. Verma, L.R. 1990a. Beekeeping in Integrated Mountain Development. *Economic and Scientific Perspectives* . Oxford and IBH publishing Co. New Delhi. pp. 367.

9. Verma, L. R 1990b. motolity and metabolism of honeybee spermatozoa in the spermatheca and during in vitro storage. In: *Advances in Invertebrate Reproduction.* ed. M. Hoshi and O. Yamashita. Elsevier Science publications: New York, pp. 447-482.

BEST AVAILABLE DOCUMENT

10. Verma, L.R. 1992a. On the declining genetic diversity of *Apis cerana* F. in Hindu Kush-Himalayan Region. International Apiculture Conference on Asian Bees and Bee Mites, Bangkok, 9-14 Feb, 92. (in press).

11. Verma, L.R. 1992b. *Honeybees in Mountain Agriculture*. Oxford and IBH publishing Co., New Delhi, pp. 274.

12. Verma, L.R. 1992c. Exploration of Genetic Diversity in Himalayan Honeybee, *Apis cerana F, USAID Annual Report*, pp, 10.

13. Zhen-ming jin; Yang Guan Huang, Huang Shuangxiu, Liang Shikui and Ren Zangin. 1992. The Advancement of beekeeping science and technology in China, In: *Honeybees in Mountain Agriculture* ed. L.R. Verma. Oxford and IBH publishing co. New Delhi, pp. 133-148.

BEST AVAILABLE DOCUMENT

Proc. XXXIII APIMONDIA International Beekeeping Conference, Beijing, China, 1993.

APIS CERANA IN GLOBAL BEEKEEPING

L.R. VERMA

International Centre for Integrated Mountain Development (ICIMOD)

P.O. Box 3226, Kathmandu, Nepal

Introduction

The Asian hive bee, Apis cerana F. is equivalent to the European hive bee, Apis mellifera, because both can be domesticated and are similar in nest building and dancing behaviour. This native bee species is not only the basic source of most of the commercial or domestic honey and other hive products, but also enhances productivity levels of many cultivated crops through cross-pollination. The current importations of allopatric Apis mellifera into Asia for commercial exploitation is leading to the decline of Apis cerana populations in their native habitats to a level that threatens its extinction as a genetic resource. Development of beekeeping industry in the Hindu Kush Himalayan countries, therefore, requires a different strategy, i.e. conservation through development and promotion of beekeeping with Apis cerana in order to maintain its genetic diversity. Such an approach will aid beekeeping and agriculture not only in its native Asian habitat, but world wide as well.

BEST AVAILABLE DOCUMENT

Exotic Apis mellifera: Problems and Prospects

As a result of continuous research efforts in the area of genetic diversity, selective breeding and improved management practices, Apis mellifera produces three times more honey than Apis cerana. Further, Apis mellifera is superior to Apis cerana due to its maintenance of prolific queens and less swarming and absconding tendencies. However, many importations of exotic Apis mellifera in to Asia have proved disastrous. When kept sympatrically, Apis cerana and Apis mellifera colonies frequently rob each other (Koeniger 1982). Another cause of failing in co-existence of the two species is attempted intermating which produces lethal off-spring (Ruttner and Maul 1983). A new problem is the transfer of parasites from one species to another. A parasitic mite of brood and adults Varroa jacobsonii can co-exist with Apis cerana and causes no serious damage to this native bee species. In several parts of Asia, where both these bee species are now kept together, the parasite has infested Apis mellifera colonies and became a serious pest to this unadapted host. There is now apprehension that importation of Apis mellifera will lead to the decline of Apis cerana populations in its native habitat. In Japan and China, Apis cerana is now largely replaced by imported Apis mellifera colonies. Other Asian countries such as Pakistan and India are now following this trend.

Apis cerana: Problems and Prospects

Apis cerana has many valuable characteristics of biological and economic importance. These include their docile and industrious nature, their being less prone to attack of wasps and a high level of resistance to nosema disease and the parasitic Asian mites Varroa jacobsonii and Tropilaelaps clarae that plague Apis mellifera. Apis cerana can co-exist with other native bee species and requires little chemical treatment of colonies to control epidemics. However, as yet this native bee species has not become popular amongst beekeepers because of several behavioural

BEST AVAILABLE DOCUMENT

196

BEST AVAILABLE DOCUMENT

characteristics. These include their frequent swarming and absconding, their tendency to rob, their production of a large number of laying workers and their lower honey yields. These negative traits show eco-geographical variations depending upon the sub species/geographic ecotype and management efficiency of the beekeepers.

Some of these undesirable behavioural traits, from a beekeeping point-of-view, emerged in Apis cerana during the process of evolution as a result of harmful exploitation of this bee species by man. For example, through traditional methods of beekeeping; which are in vogue even today, most of the bees during honey harvesting were killed and no honey store was left behind in the nest for consumption by bees during dearth periods. As a result of this, the colonies of Apis cerana that survived and propagated in nature has developed the traits of frequent migration and absconding to safer and better pastures. In order to reverse such trends, a strategy through development and promotion of beekeeping with Apis cerana in modern movable hives is needed where moderate honey harvests are collected in a timely manner without harming the bees. In order to make such strategies successful, the foremost requirement is exploration and evaluation of different sub-species/geographic ecotypes of Apis cerana, which has not yet been done in detail in its native habitat.

Sub-species/geographic Ecotypes of Apis cerana

In the recent past, attempts have been made to identify different sub-species and geographic ecotypes of Apis cerana by using computer assisted statistical methods. Ruttner (1987) distinguished four different sub-species of Apis cerana namely : A.c. cerana, A. c. himalaya, A.c. indica and A.c. japonica. His studies were based on 34 morphological characters of 68 samples of Apis cerana collected from different parts of Asia. Similarly, Mattu and Verma (1983, 1984 a,b) studied the genetic diversity of the Apis cerana from the Himalayan region. These results

197

revealed that bees from mountainous regions were significantly larger in size and darker in colour than those from sub-mountainous regions. Morphometric comparison of worker bee populations of Himalayas revealed significant differences in size (north-west Himalayan bees>north east Himalayan bees>south Indian bees). These three sub-species corresponded to A.c. cerana, A. c. himalaya, and A.c. indica of Ruttner's analysis. In the north-east Himalayas, Singh et al. (1990) identified 3 geographic ecotypes of A. c. himalaya that correspond to a geographic distribution in (1) the foot hills of Himalaya, (2) Bramhaputra valley and Khasi Hills and (3) the Naga and Mizo Hills. These groups are biologically meaningful because the localities of each group fall within separate geographic areas.

The above cited morphometric analyses based on small number of samples, gives only overview of the total genetic diversity, but does not enable one to detect distinct sub-species/ecotypes with varied economic usefulness. Thus there is a further need to explore genetic diversity at the sub-species/ecotypes level especially in the Hindu Kush-Himalayan region which has the largest and possibly most economically useful sub-species and ecotypes of Apis cerana.

Behaviour and Management of Apis cerana

Lack of basic knowledge of Apis cerana behaviour is a major constraint in developing appropriate apiary management technology with this native bee species. Very little is currently in the literature covering this subject in-depth, compared to volumes of material specific to Apis mellifera. In the absence of such appropriate apiary management technology based on specific behavioural characteristics of Apis cerana, several past national and international development projects for promotion of beekeeping with this bee species in developing countries of Asia attempted application of European honeybee, Apis mellifera, apiary management technology on Apis cerana. Consequently, many of these projects ended in failure because Apis cerana show

BEST AVAILABLE DOCUMENT

striking differences from Apis mellifera in certain behavioral traits such as colony cycle, foraging, temperature regulation, colony defense, aggressiveness, absconding, swarming, etc. Some of these act as negative behavioral traits from a practical beekeeping point of view in Apis cerana. For example, frequent swarming and absconding by Apis cerana especially during honey flow seasons, lead to decline in colony strength and adversely affect honey production and pollination efficiency. There are no such problems in beekeeping with Apis mellifera and it is easier to get surplus honey from this bee species in comparison to Apis cerana. However, these negative traits in Apis cerana are amenable through research efforts. This scientifically neglected bee species has the potential to match Apis mellifera in economic usefulness. Many studies, especially in India, have demonstrated the ability of Apis cerana to pollinate a wide range of agricultural crops. Further studies on foraging behavior of this bee species will lead to better exploitation of its pollination efficiency and thus help in productivity of agricultural crops (Verma 1990, 1991).

Introduction of Apis cerana to Europe and America

There is now increasing interest among the western bee scientists and beekeepers in Asian hive bee, Apis cerana because of the recent problem of Varroa mite on European Apis mellifera and also the danger from the diffusion of Africanized bees to the northern hemisphere. New technologies in molecular biology will present opportunities to introduce genes that code for desirable characteristics of Apis cerana into population of Apis mellifera and vice versa. Apis cerana could potentially be of great importance to beekeeping in developed countries. However, introduction of Apis cerana into Europe or Americas would require following step-wise rigorous testing and monitoring.

- Identification of commercially valuable sub-species/geographic ecotypes of Apis cerana in its native habitat.

BEST AVAILABLE DOCUMENT

- Further selection and testing of the stock on off-shore islands.

- Zonation of areas in each country for Apis cerana and Apis mellifera beekeeping. Such zonation has been very successful in China and India It would solve the problem of inter-species competition and both species could be complementary to each other.

Cost of introducing Apis cerana would be quite expensive but if successful, would be only a fraction of its values as a crop pollinator and producer of high quality organic hive products. In addition, Apis cerana would fit in a better way than Apis mellifera to alternative sustainable farming systems strategies now being introduced in developed countries.

Apis cerana Research in ICIMOD

Mountain farming systems' programmes at International Centre for Integrated Mountain Development (ICIMOD), Kathmandu, Nepal are aimed at the search for such non-land based activities or options in the context of the sustainable development of mountain agriculture in terms of resource base availability, resource use/management practices, and production flow. Within this context, ICIMOD has identified beekeeping as one such income - and food generating activity which offers several comparative advantages with positive ecological consequences. For the last three years, this centre has reviewed the status, scope and strategies for beekeeping development in south and south east Asia in general, and the Hindu Kush-Himalayan countries in particular (Verma 1990, 1991). Recently, ICIMOD has been sanctioned regional project on genetic diversity of Apis cerana by United States Agency for International Development (USAID). The major objective of this project is conservation of Apis cerana through development and promotion of beekeeping with this native bee species with major thrust on morphometric analyses, mitochondrial and nuclear DNA polymorphism, behavioural and apiary management research. This research project is the first of its kind in which co-ordinated efforts

BEST AVAILABLE DOCUMENT

200

at regional level will be made by net working all major beekeeping institutes of Hindu Kush-Himalayan countries. It is hoped that the result of this research project will provide a base for further improvement of useful sub-species/ecotypes of Apis cerana through classical and molecular techniques and appropriate apiary management practices.

References

1. Koenigar, N. 1982. In : Breed, Michner and Evans (ed). The Biology of Social Insects.

2. Mattu, V.K. and Verma, L. R. 1983. J. Apic. Res 22:79-85.

3. Mattu, V.K. and Verma L. R. 1984. a. J. Apic. Res. 23: 117-122.

4. Mattu, V.K. and Verma L. R. 1984. b. J. Apic. Res. 23: 3-10.

5. Ruttner, F. 1987. Biogeography and taxonomy of honeybee. Berlin: Springer Verlag.

6. Rutnner F. and Maul. 1983. Apidologies 14:309-3240.

7. Singh, M.P., Verma L. R. and Daly, H.V. 1990 J. Apic. Res. (in press).

8. Verma, L.R. 1990. Beekeeping in Integrated Mountain Development: Economic and Scientific Perspectives: Oxford and IBH Publishers, New Delhi, India.

9. Verma, L.R. 1991. Honeybees in Mountain Agriculture. Oxford IBH Publishers, New Delhi, India.

BEST AVAILABLE DOCUMENT

Acknowledgements

This research was supported under grant No. 367-5600-55-1147-001, Programme in Science and Technology Cooperation, office of the Science Advisor, U.S. Agency for International Development.

BEST AVAILABLE DOCUMENT

INAUGURAL KEY NOTE ADDRESS AS SR. VICE PRESIDENT OF ASIAN APICULTURAL ASSOCIATION, TOKYO, JAPAN

MS # 25

AAA : It's Concepts and Challenges

Dr. L. R. Verma

International Center for Integrated Mountain Development (ICIMOD)
Kathmandu, Nepal

The establishment of the Asian Apicultural Association meets a need that has become pronounced with each passing day. It was in 1987 that professor Ruttner, as chairman of APIMONDIA, Bee Biology Commission, accepted my suggestion to organize a special symposium on the biology and management of the Asian hive bee Apis cerana in Warsaw, Poland. In this symposium, leading bee scientists from Bangladesh, China, India, Japan, Malaysia, Pakistan, and Indonesia focused on the magnitude of the problems that the beekeeping industry is facing in Asia and the urgent need to find a solution to them. The desire was thus expressed that ass bee scientists in the region should cooperate in founding this association and the initial responsibility for coordinating their efforts was entrusted to me. This idea was further discussed with fellow bee scientists participation in the fourth IBRA International Conference on Apiculture in Cairo, Egypt; the ICIMOD International Expert Meeting on Apicultural Development in Hindu Kush-Himalayan countries, Kathmandu, Nepal; and the Fifth International Congress of Invertebrate Reproduction, Nagoya, Japan. The support received was encouraging, and during the first Asia-Pacific Conference on Entomology held in Chiang Mai, Thailand, a special session was held concerning the formation of AAA in which an ad hoc under the con-enorship of Dr. M. Matsuka from Japan who through his sustained efforts, converted this concept into reality.

The major task of AAA is to act as an information dissemination center by publishing scientific and extension literature for the advancement of apiculture; Primarily with Asiatic species of honeybees. This association will also act as a co-ordinating agency for sharing technology and technology transfer for the development and promotion of apiculture. It will also organize seminars, workshops, conferences, and monitoring tours; as well as providing and render beekeeping advisory/consulting services to government and non-government organizations in the region.

The Asian region is rich in bee resources. There are at present four or more species of honeybee in this region. Among these, the Asian hive bee, Apis cerana, is equivalent to the European hive bee, Apis mellifera because both can be domesticated and build parallel combs. Apis cerana has many valuable characteristics of biological and economic importance These include their docile and industrious nature: their being less prone to attacks from wasps; and high level of resistance to nosema disease and parasitic Asian mites Varroa jacobsoni and Tropilaelaps clarae that plague Apis mellifera. Apis cerana can co-exist with other native b bee species and requires least chemical treatment of colonies to control epidemics. However, as yet, this native bee species has not become very popular amongst the beekeepers because of several behavior characteristics. These include their frequent swarming and absconding, their tendency to rob, their production of large number of laying workers, and their lower honey yields. these negative traits vary from apiary to apiary depending upon bee race and management efficiency.

There is a current movement in Asia to import *Apis mellifera* for commercial exploitation. Such introduction into northern India, the north west Frontier Province of Pakistan, parts of China, Japan, and Thailand is now the basis of flourishing beekeeping industries. The exotic bee species produces three times more honey than the native, *Apis cerana* and is more suited to modern bee management technology. However, many importation of exotic *Apis mellifera* have proved disastrous because of its allopartric nature and the introduction of new diseases and parasitic mites. There is now apprehension that importation of *Apis mellifera* will lead to the decline of *Apis cerana* population in its native habitat to a level that threatens its extinction as a genetic resource. *Apis cerana* has already become a rare species in Japan and parts of China. Before this happens in other countries of the region, a conservation strategy, through development and promotion of beekeeping with this native bee species, needs to be adopted to help maintain its genetic diversity. Such strategies first require the exploration and evaluation of different sub species/races/ecotypes of the native species and then improvement of the best of them through selective breeding, appropriate apiary management practices, and biotechnological research.

The genetic diversity of *Apis mellifera* has been organized into 24 sub-species that have varied economic

* A part of this article appeared in Newsletter for Beekeepers in Tropical and Subtropical Countries No. 17 (Nov 1990)

BEST AVAILABLE DOCUMENT

usefulness. So far, only three sub-species of *Apis cerana* are recognized, although there may be several more because of its wide range of geographic distribution. The northern and high altitude sub-species/ecotypes of *Apis cerana* is likely to yeild valuable honeybee germplasm which may have commercial applications; this hemisphere where *Apis mellifera* is threatened with parasitic Asian bee mites and the spread of aggressive Africanized bees.

In south and southeast Asia, there are some countries where exotic *Apis mellifera* has not yet been introduced, and attempts are being made to improve beekeeping with the native *Apis Cerana* through technical and financial assistance from different national, bilateral, and international donor agencies.

Unfortunately, such efforts have not yielded satisfactory results. One of the obvious reasons for the failure of these projects has been the transfer and unsuccessful application of western bee management technology and expertise to improve beekeeping with *Apis cerana* in this region. This native species certainly requires different management practices and equipment because of its nest building behavior, colony cycle, temperature regulatory mechanisms, foraging, colony defense, smaller body size, and other behavioral characteristics. Some attempts have been made in India and China to improve the traditional methods of beekeeping with *Apis cerana* and in mountain parts of these countries *Apis cerana* matches *Apis mellifera* in honey production.

The ecological resources of the Asian Region, offer great potentials for the development of apiculture. Due to the ideal climatic conditions and the diversity of bee and floral resourses, the region can become a land of honey; provided there adequate original planning on the part of policy makers as well as continuing commitment form the programs. However, apiculture, in many countries of the region, is still traditional household activity, and the native hive bee is kept in traditional haves and the honey harvested by squeezing the whole comb. It is them sold in pre-used containers without any quality control standards.

Although beekeeping with *Apis cerana* has been closely linked with the natural and cultural heritage, particularity of the mountain communities in this region, it has not yet developed on the modern scientific lines as it has on the commercial scale with the European honeybee, *Apis mellifera*, in several advanced countries of the West. In the mountain areas of India (Kashmir and Himachal Pradesh) and China, modern methods of beekeeping have been adopted and basic infrastructural and technical know-how also exist. However, in other countries of the region, beekeeping development programs are still facing teething problems. Several countries in this region do not posess basic infrastructure, skilled manpower, extension, and training facilities; or basic and applied research programs for the advancement of apiculture. At present, scattered efforts being made for the promotion of the industry, by different national and international agencies, have not yielded the desired results. It is hoped that the coordinated efforts of AAA will play a significant role to fill these gaps.

To this end, I express my appreciation to Prof. M. Matsuka and his colleagues, from the Institute of Honeybee Science, Tamagawa University, Tokyo, Japan, for the organizational work undertaken by them. Their committed efforts will enable AAA to get off to a good start. Financial support given by the Japan Beekeeping Association to AAA is gratefully acknowledged. I also greatly appreciate the cooperation and the many warm wishes received from fellow bee scientist and beekeepers who have helped to activate AAA.

Beekeeping in integrated mountain development

by L.R. Verma

Oxford & IBH Pub. Co. Pvt. Ltd., New Delhi.

This interesting book on apiculture is unique in the sense that, besides presenting a comprehensive review, on scientific and practical aspects of beekeeping, it covers the economic and developmental aspects of apiculture as a cottage industry and analyses its prospects based on the ecological resourses and socioeconomic conditions prevailing in the Hindu Kush-Himalayan region. Against this background, the conclusions and recommendation drawn by the author will be relevant to other developing countries.

BEST AVAILABLE DOCUMENT

Contribution of the Asian Hive Bee to Crop Production and Income*:

L.R. Verma

International Centre for Integrated Mountain Development (ICIMOD)
P.B. No. 3226, Kathmandu, Nepal

Introduction

Mountain Farming System's Programme at ICIMOD focuses on a search for non-land based activities or options in the context of sustainable development of Mountain Agriculture in terms of resource base availability, resource management practices, and production flow. In this context, ICIMOD has identified beekeeping as one such income and food- generating activity, which offers comparative advantages for mountain areas and is environmentally most friendly. The natural products produced by honeybees and which human's now use, are honey, royal jelly, pollen, propolis, beeswax, and venom as well as several other secondary products. These products have both consumptive and productive use value because they can be consumed directly at home or exchanged in local and international markets.

Honeybees also provide non-consumptive, indirect benefits because their pollination activities boost the productivity of several mountain crops. Income from agriculture, realised by using honeybees for crop pollination, is many times greater than their value as producers of honey and other hive products. For example, the value of bee pollination in crop production in the U.S.A. has been estimated at 20 billion US dollars per year. However, this aspect has often been underestimated, especially in developing countries.

In addition, these social insects deal with the primary functions of ecosystems that involve reproduction, gene flow, cross-fertilization, and so on, and thus help to conserve bio-diversity, to enhance the carrying capacity of different ecosystems, and to maintain the evolutionary processes.

Among the different species of honeybees found in the Hindu Kush-Himalayan region, the Asian hivebee, Apis cerana is the only one which has been domesticated over the centuries for honey and beeswax production and it also forms an integral part of natural and cultural heritage of mountain communities.

It is in this light, that the Beekeeping Research and Development Programme at ICIMOD has been concentrating on conservation biology and the contribution of the Asian hive bee, Apis cerana, to crop production and income. The major focus has been on reviewing the state of the art of beekeeping, applied research and development programmes, and training activities.

---

* Paper presented during ICIMOD tenth anniversary symposium held in Kathmandu, Nepal, 30th November - 6th December, 1993.

205

Apis cerana Beekeeping in HKH Region

In reviewing the state of the art of beekeeping in the HKH region, the ICIMOD researchers (as well as other investigators), have observed that the native Asian hive bee, Apis cerana, has become an endangered species because the population of this genetic resource has declined to a level that is no longer viable. We have also proposed a model for vulnerability analysis of Apis cerana which reveals that decline in genetic diversity of this species in the HKH region is due to the interaction between several environmental and genetic factors. Among these, the important ones are competition for food and nesting sites with the exotic, Apis mellifera, qualitative and quantitative changes in habitat, poisoning of honeybees by pesticides, incidence of sac brood virus disease, human predation and frequent swarming, absconding, and inbreeding depression.

Genetic Diversity Research

In order to save this important genetic resource from possible extinction, we are following the basic conservation principle i.e. conservation through development and promotion of beekeeping with this native bee species. However, this species does not equal the European honeybee in honey and beeswax production, and research efforts are needed to bridge this gap. In this context, ICIMOD has started genetic diversity, pollination, and honey plant resources research. The main objective of genetic diversity research is to identify the different sub-species/ecotypes of Apis cerana and assess their commercial usefulness. For this purpose, we have collected honeybee samples from all eight countries of the HKH region as well as from outside, representing different eco-physiographic zones.

Based on biometric and molecular genetic diversity research, we have identified three new sub-species of Apis cerana. Amongst these, the sub species from Jumla and the Kashmir Himalayas are commercially the most productive. Every effort should be focussed on their genetic improvement. In collaboration with Beekeeping Experts from the Austrian department of agriculture and the University of Vienna, we are now carrying out further studies on stock improvement of Apis cerana through selection, mass queen rearing and artificial insemination.

Pollination Ecology and Honey Plant Resources Research

There is a wide and diverse range of insect pollinators in the HKH Region but their populations are declining sharply because of indiscriminate use of pesticides and other biocides. Domesticated honeybees therefore remain the most frequent and efficient pollinators of agricultural crops. Under the USAID/ADB-funded beekeeping research and development programme at ICIMOD, detailed investigations have been conducted on the use of the native Asian hive bee, Apis cerana, to enhance yield and improve the seed quality of important vegetable crops grown in the Kathmandu valley of Nepal. Results of the effects of honeybee pollination on yield and quality reveal that, in the case of cross-pollinated crops such as cole crops or radishes, the yield is enhanced by 40-50 percent and in self-pollinated crops such as lettuce and mustard, the increase in seed yield varies from 15-20 percent.

By means of a honey plant resources survey, more than 500 species of plants acting as honey sources, have been identified. Based on this survey, microscopy and a computer assisted pollen data bank are being prepared to monitor the shifts in plant biodiversity over a period of time.

Beekeeping Extension and Training

Under the beekeeping development programme, ICIMOD is identifying remote and inaccessible areas in the HKH region, where this cottage industry offers comparative advantages. One such area under study now is the Jumla district of Nepal where there is a very old tradition of beekeeping in log hives. Farmers in Jumla treat honeybees with great skill, love, and care. In this inaccessible area, honey is a major source of income, nutrition, multipurpose medicine and sweetening. It is frequently bartered for other essential household items of daily use. Surplus honey from the Jumla region has the potential for sale in the international market as organic health food at a premium price, because the farmers do not use pesticides on agricultural crops and bee colonies are not treated with drugs. It is possible to bring a golden revolution to this region because of its wide diversity of honey plant resources and the ideal weather conditions. The main constraints are the inappropriate traditional practices which farmers use for the harvesting and storing of honey, and both of these need to be improved.

The development strategies being adopted by ICIMOD in collaboration with the Karnali Technical School in Jumla include:

- Improving the extraction and storing of honey in a scientific way
- Forming a Jumla beekeeper's association
- Exploring foreign markets in order to sell honey at premium prices
- A survey of honey flora
- Substituting wooden log hives with straw hives and
- Providing a superior stock of queen bees.

If the present experience in Jumla proves successful, it can be replicated successfully in other parts of the HKH region where there are similar socio-economic and ecological conditions.

In addition, beekeeping experts at ICIMOD have been actively involved in organising "Train the Trainer" and "Train the Farmer" programmes in beekeeping and pollination technology and also in rendering advisory/consultancy services to different national and international projects both within in the HKH region and outside.

Future Programme

With technical assistance from the Federal Chancellory of Austria and Austrovieh/Biomerx, our future programme includes

- Genetic improvement of the Himalayan honeybee through selection, breeding, and molecular research.
- The role of honeybees in monitoring and conserving plant biodiversity.

207

Bee pollination technology

Honeybees as survey tools for monitoring environmental pollution, and

The establishment of biological research facilities at ICIMOD.

Beekeeping has the potential to be an alternative income and food generating activity, primarily in inaccessible areas of the HKH region where currently indiscriminate exploitation of medicinal herbs and other ecologically detrimental and unsustainable activities are on the increase.

ACKNOWLEDGEMENTS

This research was supported in part under Grant No. 367-5600-G-SS-1147-00 Programme in Science and Technology Co-operation, Office of Science Advisor, U.S. Agency for International Development and by Federal Chancellory of Austria.

LIST OF PROJECT PUBLICATIONS

Genetic Diversity and Morphometric Research

1 Current state of Himalayan honeybee (*Apis cerana*) biodiversity and strategies for its conservation. In: Himalayan Biodiversity: Conservation Strategies (ed) U. Dhar. pp. Gyanodaya Prakashan, Nainital, India, pp. 415-428, 1993.

2 Declining Genetic Diversity of *Apis cerana* in Hindu Kush-Himalayan region. In: Asian Apiculture. (eds) Lawrence J. Conner, Thomas Rinderer, H. Allen Sylvester and Siriwat Wongsiri. Wicwass Press, Cheshire, Connecticut, USA. pp. 81-88, 1993.

3 Genetic diversity in *Apis cerana*. Beekeeping and Development : 1993, No. 26. pp. 11.

4 Genetic diversity in Himalayan honeybee, *Apis cerana* F. Proc. USAID-PSTC/CDR Networking Meeting on Bio-diversity, Honolulu, Hawaii, 1992.

5 Strategies for conservation of Asian hive bee, *Apis cerana*. Asian Apicultural Association Newsletter 4: 2-3, 1993.

6 Strategies for Conservation of Asian Hive Bee *Apis cerana*. Proc. Int. Entomol. Cong. Beijing, July, 1992.

7 Multivariate morphometrics of the Indian honeybee in the northwest Himalayan region. Apidologie. 25: 1-21, 1994.

8 Multivariate morphometrics of the Indian honeybee in central (Uttar Pradesh and Nepal) Himalayan region. J. Apic. Res. (MS in preparation).

Pollination Research

9 Floral biology and foraging behavior of *Apis cerana* on lettuce crop and its impact on seed production. Progress. Hortic. 24 (1-2), 1992.

10 Potentials of *Apis cerana* as pollinator for increasing global food production. In Pollination in Tropics. Proc. (eds) G.K. Veeresh, R. Uma Shanker and K.N. Ganeshaiah. Published by ICSSI-Indian chapter, Banglore. pp. 296-301, 1993.

11 Pollination of vegetable crops using Asian hive bee, *Apis cerana* in Kathmandu valley of Nepal. (IBID). pp. 184-186.

12 Foraging behavior of *Apis cerana* on cole vegetable crops and its impact on seed production. J. Apic. Res. (in press).

13 Asian Hive Bee *Apis cerana* as a pollinator of the radish flower and its impact on seed production . J. Apic. Res. (in press).

14 Comparative foraging behavior of *Apis cerana* and *Apis mellifera* on Indian mustard (*Brassica juncea* var Khumal Broad Leaf) flower in Kathmandu valley, Nepal. Progressive Hortic. (in press).

15 Vegetable seed production using Himalayan honeybee (*Apis cerana* F) as pollinator in Kathmandu valley: Indian Mustard. Progressive Hortic. (in press).

16 Insect pollination of eggplant (*Solanum melongena* var Pusa Purple Long) in Kathmandu valley of Nepal. Progressive Hortic. (in press).

17 Pollination strategies for conservation of biodiversity in Hindu-Kush Himalayan Region. Proc. UNESCO Workshop on Conservation and Management of Biological Resources in Himalaya. Srinagar, Garhwal, India, 1993.

18 Bee pollination and biodiversity conservation in Himalayas. Regional Conference on Environment and Biodiversity, Kathmandu, Nepal, March, 1994.

19 The Role of Bees in Pollination. In: Regenerative Agriculture Technologies for the Hill Farmers of Nepal: An Information Kit, NERRA, Nepal and IIRR, Philippines, 1992.

20 Honey and honeybees in forest ecosystem. Proc. National seminar on Forest Produce Coimbatore, India, 1993.

Behavioural Research

21 Impact of food resource availability on growth and development of *Apis cerana* in Kathmandu valley of Nepal. (Communicated).

22 Seasonal patterns of foraging activity in colonies of Asian hivebee *Apis cerana* F. in Kathmandu valley of Nepal. (Communicated).

Beekeeping Development

23 A Framework for R & D on Beekeeping with Asian Hive Bee *Apis cerana*. Proc. Beenet Asia: Workshop on priorities in R & D on Beekeeping in Tropical Asia, Serdang, Malaysia. Universiti Pertanian, Malaysia, Southbound, pp 75-88, 1993.

24 *Apis cerana* in global beekeeping. Proc. XXXIII APIMONDIA Int. Beekeeping Conf., Beijing, China, 1993.

25 Asian Apiculture Association: Its Concepts and Challenges. Inaugural Asian Apiculture Association Newsletter, 1991.

26 Contribution of Asian hive bee to crop production and income. Proc. ICIMOD 10th anniversary symposium, Kathmandu, Nepal, 1993.

Manual:

Asian Hive Bee *Apis cerana* as Pollinator in Vegetable Seed Production (Awareness and Practical Handbook). 52 pp. ICIMOD Publication.

Dictionary:

Dictionary of Beekeeping Terms : English-Hindi-Chinese Volume XI. ICIMOD Publication.

Video Film:

Migratory beekeeping as an off-farm income generating activity especially in Pakistan. An ICIMOD production.